UNITED STATES PATENT AND TRADEMARK OFFICE

UNITED STATES DEPARTMENT OF COMMERCE
United States Patent and Trademark Office
Address: COMMISSIONER FOR PATENTS
P.O. Box 1450
Alexandria, Virginia 22313-1450
www.uspto.gov

APPLICATION NUMBER	FILING or 371(c) DATE	GRP ART UNIT	FIL FEE REC'D	ATTY.DOCKET.NO	TOT CLAIMS	IND CLAIMS
62/297,424	02/19/2016		260	13682.225614		

CONFIRMATION NO. 7138

FILING RECEIPT

OC000000081150055

91764
King & Spalding LLP (Eaton/Cooper)
ATTN: IP Docketing Department
1100 Louisiana Street, Suite 4000
Houston, TX 77002-5213

Date Mailed: 03/04/2016

Receipt is acknowledged of this provisional patent application. It will not be examined for patentability and will become abandoned not later than twelve months after its filing date. Any correspondence concerning the application must include the following identification information: the U.S. APPLICATION NUMBER, FILING DATE, NAME OF APPLICANT, and TITLE OF INVENTION. Fees transmitted by check or draft are subject to collection. Please verify the accuracy of the data presented on this receipt. **If an error is noted on this Filing Receipt, please submit a written request for a Filing Receipt Correction. Please provide a copy of this Filing Receipt with the changes noted thereon. If you received a "Notice to File Missing Parts" for this application, please submit any corrections to this Filing Receipt with your reply to the Notice. When the USPTO processes the reply to the Notice, the USPTO will generate another Filing Receipt incorporating the requested corrections**

Inventor(s)

Steven Walter Pyshos, Peachtree City, GA;
Raymond Janik, Fayetteville, GA;

Applicant(s)

Steven Walter Pyshos, Peachtree City, GA;
Raymond Janik, Fayetteville, GA;

Power of Attorney:
Robert Neufeld--48394

Permission to Access Application via Priority Document Exchange: Yes

Permission to Access Search Results: Yes

Applicant may provide or rescind an authorization for access using Form PTO/SB/39 or Form PTO/SB/69 as appropriate.

If Required, Foreign Filing License Granted: 03/03/2016

The country code and number of your priority application, to be used for filing abroad under the Paris Convention, is **US 62/297,424**

Projected Publication Date: None, application is not eligible for pre-grant publication

Non-Publication Request: No

Early Publication Request: No

Luminex v. Signify
Luminex Exhibit 1008
Page 001

Title

Configurable Lighting System

Statement under 37 CFR 1.55 or 1.78 for AIA (First Inventor to File) Transition Applications: No

PROTECTING YOUR INVENTION OUTSIDE THE UNITED STATES

Since the rights granted by a U.S. patent extend only throughout the territory of the United States and have no effect in a foreign country, an inventor who wishes patent protection in another country must apply for a patent in a specific country or in regional patent offices. Applicants may wish to consider the filing of an international application under the Patent Cooperation Treaty (PCT). An international (PCT) application generally has the same effect as a regular national patent application in each PCT-member country. The PCT process **simplifies** the filing of patent applications on the same invention in member countries, but **does not result** in a grant of "an international patent" and does not eliminate the need of applicants to file additional documents and fees in countries where patent protection is desired.

Almost every country has its own patent law, and a person desiring a patent in a particular country must make an application for patent in that country in accordance with its particular laws. Since the laws of many countries differ in various respects from the patent law of the United States, applicants are advised to seek guidance from specific foreign countries to ensure that patent rights are not lost prematurely.

Applicants also are advised that in the case of inventions made in the United States, the Director of the USPTO must issue a license before applicants can apply for a patent in a foreign country. The filing of a U.S. patent application serves as a request for a foreign filing license. The application's filing receipt contains further information and guidance as to the status of applicant's license for foreign filing.

Applicants may wish to consult the USPTO booklet, "General Information Concerning Patents" (specifically, the section entitled "Treaties and Foreign Patents") for more information on timeframes and deadlines for filing foreign patent applications. The guide is available either by contacting the USPTO Contact Center at 800-786-9199, or it can be viewed on the USPTO website at http://www.uspto.gov/web/offices/pac/doc/general/index.html.

For information on preventing theft of your intellectual property (patents, trademarks and copyrights), you may wish to consult the U.S. Government website, http://www.stopfakes.gov. Part of a Department of Commerce initiative, this website includes self-help "toolkits" giving innovators guidance on how to protect intellectual property in specific countries such as China, Korea and Mexico. For questions regarding patent enforcement issues, applicants may call the U.S. Government hotline at 1-866-999-HALT (1-866-999-4258).

LICENSE FOR FOREIGN FILING UNDER

Title 35, United States Code, Section 184

Title 37, Code of Federal Regulations, 5.11 & 5.15

GRANTED

The applicant has been granted a license under 35 U.S.C. 184, if the phrase "IF REQUIRED, FOREIGN FILING LICENSE GRANTED" followed by a date appears on this form. Such licenses are issued in all applications where the conditions for issuance of a license have been met, regardless of whether or not a license may be required as set forth in 37 CFR 5.15. The scope and limitations of this license are set forth in 37 CFR 5.15(a) unless an earlier

Luminex v. Signify
Luminex Exhibit 1008
Page 002

license has been issued under 37 CFR 5.15(b). The license is subject to revocation upon written notification. The date indicated is the effective date of the license, unless an earlier license of similar scope has been granted under 37 CFR 5.13 or 5.14.

This license is to be retained by the licensee and may be used at any time on or after the effective date thereof unless it is revoked. This license is automatically transferred to any related applications(s) filed under 37 CFR 1.53(d). This license is not retroactive.

The grant of a license does not in any way lessen the responsibility of a licensee for the security of the subject matter as imposed by any Government contract or the provisions of existing laws relating to espionage and the national security or the export of technical data. Licensees should apprise themselves of current regulations especially with respect to certain countries, of other agencies, particularly the Office of Defense Trade Controls, Department of State (with respect to Arms, Munitions and Implements of War (22 CFR 121-128)); the Bureau of Industry and Security, Department of Commerce (15 CFR parts 730-774); the Office of Foreign AssetsControl, Department of Treasury (31 CFR Parts 500+) and the Department of Energy.

NOT GRANTED

No license under 35 U.S.C. 184 has been granted at this time, if the phrase "IF REQUIRED, FOREIGN FILING LICENSE GRANTED" DOES NOT appear on this form. Applicant may still petition for a license under 37 CFR 5.12, if a license is desired before the expiration of 6 months from the filing date of the application. If 6 months has lapsed from the filing date of this application and the licensee has not received any indication of a secrecy order under 35 U.S.C. 181, the licensee may foreign file the application pursuant to 37 CFR 5.15(b).

SelectUSA

The United States represents the largest, most dynamic marketplace in the world and is an unparalleled location for business investment, innovation, and commercialization of new technologies. The U.S. offers tremendous resources and advantages for those who invest and manufacture goods here. Through SelectUSA, our nation works to promote and facilitate business investment. SelectUSA provides information assistance to the international investor community; serves as an ombudsman for existing and potential investors; advocates on behalf of U.S. cities, states, and regions competing for global investment; and counsels U.S. economic development organizations on investment attraction best practices. To learn more about why the United States is the best country in the world to develop technology, manufacture products, deliver services, and grow your business, visit http://www.SelectUSA.gov or call +1-202-482-6800.

Luminex v. Signify
Luminex Exhibit 1008
Page 003

Doc Code: **TR.PROV**
Document Description: Provisional Cover Sheet (SB16)

PTO/SB/16 (11-08)
Approved for use through 05/31/2015. OMB 0651-0032
U.S. Patent and Trademark Office: U.S. DEPARTMENT OF COMMERCE
Under the Paperwork Reduction Act of 1995, no persons are required to respond to a collection of information unless it displays a valid OMB control number

Provisional Application for Patent Cover Sheet

This is a request for filing a PROVISIONAL APPLICATION FOR PATENT under 37 CFR 1.53(c)

Inventor(s)

Inventor 1 — Remove

Given Name	Middle Name	Family Name	City	State	Country ¡
Steven	Walter	Pyshos	Peachtree City	GA	US

Inventor 2 — Remove

Given Name	Middle Name	Family Name	City	State	Country ¡
Raymond		Janik	Fayetteville	GA	US

All Inventors Must Be Listed – Additional Inventor Information blocks may be generated within this form by selecting the **Add** button. Add

Title of Invention	Configurable Lighting System
Attorney Docket Number (if applicable)	13682.225614

Correspondence Address

Direct all correspondence to (select one):

◉ The address corresponding to Customer Number	◯ Firm or Individual Name
Customer Number	91764

The invention was made by an agency of the United States Government or under a contract with an agency of the United States Government.

- ● No.
- Yes, the invention was made by an agency of the United States Government. The U.S. Government agency name is:
- Yes, the invention was under a contract with an agency of the United States Government. The name of the U.S. Government agency and Government contract number are:

PTO/SB/16 (11-08)
Approved for use through 05/31/2015. OMB 0651-0032
U.S. Patent and Trademark Office: U.S. DEPARTMENT OF COMMERCE
Under the Paperwork Reduction Act of 1995, no persons are required to respond to a collection of information unless it displays a valid OMB control number

Entity Status
Applicant asserts small entity status under 37 CFR 1.27 or applicant certifies micro entity status under 37 CFR 1.29

- ○ Applicant asserts small entity status under 37 CFR 1.27
- ○ Applicant certifies micro entity status under 37 CFR 1.29. Applicant must attach form PTO/SB/15A or B or equivalent.
- ◉ No

Warning

Petitioner/applicant is cautioned to avoid submitting personal information in documents filed in a patent application that may contribute to identity theft. Personal information such as social security numbers, bank account numbers, or credit card numbers (other than a check or credit card authorization form PTO-2038 submitted for payment purposes) is never required by the USPTO to support a petition or an application. If this type of personal information is included in documents submitted to the USPTO, petitioners/applicants should consider redacting such personal information from the documents before submitting them to USPTO. Petitioner/applicant is advised that the record of a patent application is available to the public after publication of the application (unless a non-publication request in compliance with 37 CFR 1.213(a) is made in the application) or issuance of a patent. Furthermore, the record from an abandoned application may also be available to the public if the application is referenced in a published application or an issued patent (see 37 CFR1.14). Checks and credit card authorization forms PTO-2038 submitted for payment purposes are not retained in the application file and therefore are not publicly available.

Signature

Please see 37 CFR 1.4(d) for the form of the signature.

Signature	/Robert T. Neufeld/			Date (YYYY-MM-DD)	2016-02-19
First Name	Robert	Last Name	Neufeld	Registration Number (If appropriate)	48394

This collection of information is required by 37 CFR 1.51. The information is required to obtain or retain a benefit by the public which is to file (and by the USPTO to process) an application. Confidentiality is governed by 35 U.S.C. 122 and 37 CFR 1.11 and 1.14. This collection is estimated to take 8 hours to complete, including gathering, preparing, and submitting the completed application form to the USPTO. Time will vary depending upon the individual case. Any comments on the amount of time you require to complete this form and/or suggestions for reducing this burden, should be sent to the Chief Information Officer, U.S. Patent and Trademark Office, U.S. Department of Commerce, P.O. Box 1450, Alexandria, VA 22313-1450. DO NOT SEND FEES OR COMPLETED FORMS TO THIS ADDRESS. **This form can only be used when in conjunction with EFS-Web. If this form is mailed to the USPTO, it may cause delays in handling the provisional application.**

Privacy Act Statement

The Privacy Act of 1974 (P.L. 93-579) requires that you be given certain information in connection with your submission of the attached form related to a patent application or paten. Accordingly, pursuant to the requirements of the Act, please be advised that : (1) the general authority for the collection of this information is 35 U.S.C. 2(b)(2); (2) furnishing of the information solicited is voluntary; and (3) the principal purpose for which the information is used by the U.S. Patent and Trademark Office is to process and/or examine your submission related to a patent application or patent. If you do not furnish the requested information, the U.S. Patent and Trademark Office may not be able to process and/or examine your submission, which may result in termination of proceedings or abandonment of the application or expiration of the patent.

The information provided by you in this form will be subject to the following routine uses:

1. The information on this form will be treated confidentially to the extent allowed under the Freedom of Information Act (5 U.S.C. 552) and the Privacy Act (5 U.S.C 552a). Records from this system of records may be disclosed to the Department of Justice to determine whether disclosure of these records is required by the Freedom of Information Act.
2. A record from this system of records may be disclosed, as a routine use, in the course of presenting evidence to a court, magistrate, or administrative tribunal, including disclosures to opposing counsel in the course of settlement negotiations.
3. A record in this system of records may be disclosed, as a routine use, to a Member of Congress submitting a request involving an individual, to whom the record pertains, when the individual has requested assistance from the Member with respect to the subject matter of the record.
4. A record in this system of records may be disclosed, as a routine use, to a contractor of the Agency having need for the information in order to perform a contract. Recipients of information shall be required to comply with the requirements of the Privacy Act of 1974, as amended, pursuant to 5 U.S.C. 552a(m).
5. A record related to an International Application filed under the Patent Cooperation Treaty in this system of records may be disclosed, as a routine use, to the International Bureau of the World Intellectual Property Organization, pursuant to the Patent Cooperation Treaty.
6. A record in this system of records may be disclosed, as a routine use, t o a n other federal agency for purposes of National Security review (35 U.S.C. 181) and for review pursuant to the Atomic Energy Act (42 U.S.C. 218(c)).
7. A record from this system of records may be disclosed, as a routine use, to the Administrator, General Services, or his/her designee, during an inspection of records conducted by GSA as part of that agency's responsibility to recommend improvements in records management practices and programs, under authority of 44 U.S.C. 2904 and 2906. Such disclosure shall be made in accordance with the GSA regulations governing inspection of records for this purpose, and any other relevant (i.e., GSA or Commerce) directive. Such disclosure shall not be used to make determinations about individuals.
8. A record from this system of records may be disclosed, as a routine use, to the public after either publication of the application pursuant to 35 U.S.C. 122(b) or issuance of a patent pursuant to 35 U.S.C. 151. Further, a record may be disclosed, subject to the limitations of 37 CFR 1.14, as a routine use, to the public if the record was filed in an application which became abandoned or in which the proceedings were terminated and which application is referenced by either a published application, an application open to public inspection or an issued patent.
9. A record from this system of records may be disclosed, as a routine use, to a Federal, State, or local law enforcement agency, if the USPTO becomes aware of a violation or potential violation of law or regulation.

PTO/AIA/14 (11-15)
Approved for use through 04/30/2017. OMB 0651-0032
U.S. Patent and Trademark Office; U.S. DEPARTMENT OF COMMERCE
Under the Paperwork Reduction Act of 1995, no persons are required to respond to a collection of information unless it contains a valid OMB control number.

Application Data Sheet 37 CFR 1.76	Attorney Docket Number	13682.225614
	Application Number	
Title of Invention	Configurable Lighting System	

The application data sheet is part of the provisional or nonprovisional application for which it is being submitted. The following form contains the bibliographic data arranged in a format specified by the United States Patent and Trademark Office as outlined in 37 CFR 1.76.
This document may be completed electronically and submitted to the Office in electronic format using the Electronic Filing System (EFS) or the document may be printed and included in a paper filed application.

Secrecy Order 37 CFR 5.2:

☐ Portions or all of the application associated with this Application Data Sheet may fall under a Secrecy Order pursuant to 37 CFR 5.2 (Paper filers only. Applications that fall under Secrecy Order may not be filed electronically.)

Inventor Information:

Inventor 1 — Remove

Legal Name

Prefix	Given Name	Middle Name	Family Name	Suffix
	Steven	Walter	Pyshos	

Residence Information (Select One) ● US Residency Non US Residency Active US Military Service

City	Peachtree City	State/Province	GA	Country of Residence i	US

Mailing Address of Inventor:

Address 1	326 Loring Lane		
Address 2			
City	Peachtree City	State/Province	GA
Postal Code	30269	Country i	US

Inventor 2 — Remove

Legal Name

Prefix	Given Name	Middle Name	Family Name	Suffix
	Raymond		Janik	

Residence Information (Select One) ◉ US Residency Non US Residency Active US Military Service

City	Fayetteville	State/Province	GA	Country of Residence i	US

Mailing Address of Inventor:

Address 1	155 Cheshire Chase		
Address 2			
City	Fayetteville	State/Province	GA
Postal Code	30215	Country i	US

All Inventors Must Be Listed - Additional Inventor Information blocks may be generated within this form by selecting the **Add** button. Add

Correspondence Information:

Enter either Customer Number or complete the Correspondence Information section below.
For further information see 37 CFR 1.33(a).

PTO/AIA/14 (11-15)
Approved for use through 04/30/2017. OMB 0651-0032
U.S. Patent and Trademark Office; U.S. DEPARTMENT OF COMMERCE
Under the Paperwork Reduction Act of 1995, no persons are required to respond to a collection of information unless it contains a valid OMB control number.

Application Data Sheet 37 CFR 1.76	Attorney Docket Number	13682.225614
	Application Number	
Title of Invention	Configurable Lighting System	

☐ **An Address is being provided for the correspondence Information of this application.**

Customer Number	91764		
Email Address	jvillegas@kslaw.com	Add Email	Remove Email

Application Information:

Title of the Invention	Configurable Lighting System		
Attorney Docket Number	13682.225614	**Small Entity Status Claimed**	☐
Application Type	Provisional		
Subject Matter	Utility		
Total Number of Drawing Sheets (if any)	9	**Suggested Figure for Publication (if any)**	

Filing By Reference:

Only complete this section when filing an application by reference under 35 U.S.C. 111(c) and 37 CFR 1.57(a). Do not complete this section if application papers including a specification and any drawings are being filed. Any domestic benefit or foreign priority information must be provided in the appropriate section(s) below (i.e., "Domestic Benefit/National Stage Information" and "Foreign Priority Information").

For the purposes of a filing date under 37 CFR 1.53(b), the description and any drawings of the present application are replaced by this reference to the previously filed application, subject to conditions and requirements of 37 CFR 1.57(a).

Application number of the previously filed application	Filing date (YYYY-MM-DD)	Intellectual Property Authority or Country

Publication Information:

☐ Request Early Publication (Fee required at time of Request 37 CFR 1.219)

☐ **Request Not to Publish.** I hereby request that the attached application not be published under 35 U.S.C. 122(b) and certify that the invention disclosed in the attached application **has not and will not** be the subject of an application filed in another country, or under a multilateral international agreement, that requires publication at eighteen months after filing.

Representative Information:

Representative information should be provided for all practitioners having a power of attorney in the application. Providing this information in the Application Data Sheet does not constitute a power of attorney in the application (see 37 CFR 1.32).
Either enter Customer Number or complete the Representative Name section below. If both sections are completed the customer Number will be used for the Representative Information during processing.

Please Select One:	● Customer Number	US Patent Practitioner	○ Limited Recognition (37 CFR 11.9)
Customer Number	91764		

Under the Paperwork Reduction Act of 1995, no persons are required to respond to a collection of information unless it contains a valid OMB control number.

Application Data Sheet 37 CFR 1.76	Attorney Docket Number	13682.225614
	Application Number	
Title of Invention	Configurable Lighting System	

Domestic Benefit/National Stage Information:

This section allows for the applicant to either claim benefit under 35 U.S.C. 119(e), 120, 121, 365(c), or 386(c) or indicate National Stage entry from a PCT application. Providing benefit claim information in the Application Data Sheet constitutes the specific reference required by 35 U.S.C. 119(e) or 120, and 37 CFR 1.78.
When referring to the current application, please leave the "Application Number" field blank.

Prior Application Status			Remove
Application Number	Continuity Type	Prior Application Number	Filing or 371(c) Date (YYYY-MM-DD)

Additional Domestic Benefit/National Stage Data may be generated within this form by selecting the **Add** button. Add

Foreign Priority Information:

This section allows for the applicant to claim priority to a foreign application. Providing this information in the application data sheet constitutes the claim for priority as required by 35 U.S.C. 119(b) and 37 CFR 1.55. When priority is claimed to a foreign application that is eligible for retrieval under the priority document exchange program (PDX)[i] the information will be used by the Office to automatically attempt retrieval pursuant to 37 CFR 1.55(i)(1) and (2). Under the PDX program, applicant bears the ultimate responsibility for ensuring that a copy of the foreign application is received by the Office from the participating foreign intellectual property office, or a certified copy of the foreign priority application is filed, within the time period specified in 37 CFR 1.55(g)(1).

Remove

Application Number	Country[i]	Filing Date (YYYY-MM-DD)	Access Code[i] (if applicable)

Additional Foreign Priority Data may be generated within this form by selecting the **Add** button. Add

Statement under 37 CFR 1.55 or 1.78 for AIA (First Inventor to File) Transition Applications

☐ This application (1) claims priority to or the benefit of an application filed before March 16, 2013 and (2) also contains, or contained at any time, a claim to a claimed invention that has an effective filing date on or after March 16, 2013.
NOTE: By providing this statement under 37 CFR 1.55 or 1.78, this application, with a filing date on or after March 16, 2013, will be examined under the first inventor to file provisions of the AIA.

Application Data Sheet 37 CFR 1.76	Attorney Docket Number	13682.225614
	Application Number	
Title of Invention	Configurable Lighting System	

Authorization or Opt-Out of Authorization to Permit Access:

When this Application Data Sheet is properly signed and filed with the application, applicant has provided written authority to permit a participating foreign intellectual property (IP) office access to the instant application-as-filed (see paragraph A in subsection 1 below) and the European Patent Office (EPO) access to any search results from the instant application (see paragraph B in subsection 1 below).

Should applicant choose not to provide an authorization identified in subsection 1 below, applicant **must opt-out** of the authorization by checking the corresponding box A or B or both in subsection 2 below.

NOTE: This section of the Application Data Sheet is **ONLY** reviewed and processed with the **INITIAL** filing of an application. After the initial filing of an application, an Application Data Sheet cannot be used to provide or rescind authorization for access by a foreign IP office(s). Instead, Form PTO/SB/39 or PTO/SB/69 must be used as appropriate.

1. Authorization to Permit Access by a Foreign Intellectual Property Office(s)

A. Priority Document Exchange (PDX) - Unless box A in subsection 2 (opt-out of authorization) is checked, the undersigned hereby **grants the USPTO authority** to provide the European Patent Office (EPO), the Japan Patent Office (JPO), the Korean Intellectual Property Office (KIPO), the State Intellectual Property Office of the People's Republic of China (SIPO), the World Intellectual Property Organization (WIPO), and any other foreign intellectual property office participating with the USPTO in a bilateral or multilateral priority document exchange agreement in which a foreign application claiming priority to the instant patent application is filed, access to: (1) the instant patent application-as-filed and its related bibliographic data, (2) any foreign or domestic application to which priority or benefit is claimed by the instant application and its related bibliographic data, and (3) the date of filing of this Authorization. See 37 CFR 1.14(h)(1).

B. Search Results from U.S. Application to EPO - Unless box B in subsection 2 (opt-out of authorization) is checked, the undersigned hereby **grants the USPTO authority** to provide the EPO access to the bibliographic data and search results from the instant patent application when a European patent application claiming priority to the instant patent application is filed. See 37 CFR 1.14(h)(2).

The applicant is reminded that the EPO's Rule 141(1) EPC (European Patent Convention) requires applicants to submit a copy of search results from the instant application without delay in a European patent application that claims priority to the instant application.

2. Opt-Out of Authorizations to Permit Access by a Foreign Intellectual Property Office(s)

☐ A. Applicant **DOES NOT** authorize the USPTO to permit a participating foreign IP office access to the instant application-as-filed. If this box is checked, the USPTO will not be providing a participating foreign IP office with any documents and information identified in subsection 1A above.

☐ B. Applicant **DOES NOT** authorize the USPTO to transmit to the EPO any search results from the instant patent application. If this box is checked, the USPTO will not be providing the EPO with search results from the instant application.

NOTE: Once the application has published or is otherwise publicly available, the USPTO may provide access to the application in accordance with 37 CFR 1.14.

Under the Paperwork Reduction Act of 1995, no persons are required to respond to a collection of information unless it contains a valid OMB control number.

Application Data Sheet 37 CFR 1.76	Attorney Docket Number	13682.225614
	Application Number	
Title of Invention	Configurable Lighting System	

Applicant Information:

Providing assignment information in this section does not substitute for compliance with any requirement of part 3 of Title 37 of CFR to have an assignment recorded by the Office.

Applicant 1 Remove

If the applicant is the inventor (or the remaining joint inventor or inventors under 37 CFR 1.45), this section should not be completed. The information to be provided in this section is the name and address of the legal representative who is the applicant under 37 CFR 1.43; or the name and address of the assignee, person to whom the inventor is under an obligation to assign the invention, or person who otherwise shows sufficient proprietary interest in the matter who is the applicant under 37 CFR 1.46. If the applicant is an applicant under 37 CFR 1.46 (assignee, person to whom the inventor is obligated to assign, or person who otherwise shows sufficient proprietary interest) together with one or more joint inventors, then the joint inventor or inventors who are also the applicant should be identified in this section.

Clear

Assignee	Legal Representative under 35 U.S.C. 117	Joint Inventor
Person to whom the inventor is obligated to assign.	Person who shows sufficient proprietary interest	

If applicant is the legal representative, indicate the authority to file the patent application, the inventor is:

Name of the Deceased or Legally Incapacitated Inventor:

If the Applicant is an Organization check here. ☐

Prefix	Given Name	Middle Name	Family Name	Suffix

Mailing Address Information For Applicant:

Address 1			
Address 2			
City		**State/Province**	
Country		Postal Code	
Phone Number		Fax Number	
Email Address			

Additional Applicant Data may be generated within this form by selecting the Add button. Add

Assignee Information including Non-Applicant Assignee Information:

Providing assignment information in this section does not substitute for compliance with any requirement of part 3 of Title 37 of CFR to have an assignment recorded by the Office.

Under the Paperwork Reduction Act of 1995, no persons are required to respond to a collection of information unless it contains a valid OMB control number.

Application Data Sheet 37 CFR 1.76	Attorney Docket Number	13682.225614
	Application Number	
Title of Invention	Configurable Lighting System	

Assignee 1

Complete this section if assignee information, including non-applicant assignee information, is desired to be included on the patent application publication. An assignee-applicant identified in the "Applicant Information" section will appear on the patent application publication as an applicant. For an assignee-applicant, complete this section only if identification as an assignee is also desired on the patent application publication.

Remove

If the Assignee or Non-Applicant Assignee is an Organization check here. ☐

Prefix	**Given Name**	Middle Name	**Family Name**	Suffix

Mailing Address Information For Assignee including Non-Applicant Assignee:

Address 1			
Address 2			
City		**State/Province**	
Country i		Postal Code	
Phone Number		Fax Number	
Email Address			

Additional Assignee or Non-Applicant Assignee Data may be generated within this form by selecting the Add button. Add

Signature:

Remove

NOTE: This Application Data Sheet must be signed in accordance with 37 CFR 1.33(b). **However, if this Application Data Sheet is submitted with the INITIAL filing of the application and either box A or B is not checked in subsection 2 of the "Authorization or Opt-Out of Authorization to Permit Access" section, then this form must also be signed in accordance with 37 CFR 1.14(c).**

This Application Data Sheet **must** be signed by a patent practitioner if one or more of the applicants is a **juristic entity** (e.g., corporation or association). If the applicant is two or more joint inventors, this form must be signed by a patent practitioner, **all** joint inventors who are the applicant, or one or more joint inventor-applicants who have been given power of attorney (e.g., see USPTO Form PTO/AIA/81) on behalf of **all** joint inventor-applicants.

See 37 CFR 1.4(d) for the manner of making signatures and certifications.

Signature	/Robert T. Neufeld/			Date (YYYY-MM-DD)	2016-02-19
First Name	Robert	Last Name	Neufeld	Registration Number	48394

Additional Signature may be generated within this form by selecting the Add button. Add

Application Data Sheet 37 CFR 1.76	Attorney Docket Number	13682.225614
	Application Number	
Title of Invention	Configurable Lighting System	

This collection of information is required by 37 CFR 1.76. The information is required to obtain or retain a benefit by the public which is to file (and by the USPTO to process) an application. Confidentiality is governed by 35 U.S.C. 122 and 37 CFR 1.14. This collection is estimated to take 23 minutes to complete, including gathering, preparing, and submitting the completed application data sheet form to the USPTO. Time will vary depending upon the individual case. Any comments on the amount of time you require to complete this form and/or suggestions for reducing this burden, should be sent to the Chief Information Officer, U.S. Patent and Trademark Office, U.S. Department of Commerce, P.O. Box 1450, Alexandria, VA 22313-1450. DO NOT SEND FEES OR COMPLETED FORMS TO THIS ADDRESS. **SEND TO: Commissioner for Patents, P.O. Box 1450, Alexandria, VA 22313-1450.**

Privacy Act Statement

The Privacy Act of 1974 (P.L. 93-579) requires that you be given certain information in connection with your submission of the attached form related to a patent application or patent. Accordingly, pursuant to the requirements of the Act, please be advised that: (1) the general authority for the collection of this information is 35 U.S.C. 2(b)(2); (2) furnishing of the information solicited is voluntary; and (3) the principal purpose for which the information is used by the U.S. Patent and Trademark Office is to process and/or examine your submission related to a patent application or patent. If you do not furnish the requested information, the U.S. Patent and Trademark Office may not be able to process and/or examine your submission, which may result in termination of proceedings or abandonment of the application or expiration of the patent.

The information provided by you in this form will be subject to the following routine uses:

1 The information on this form will be treated confidentially to the extent allowed under the Freedom of Information Act (5 U.S.C. 552) and the Privacy Act (5 U.S.C. 552a). Records from this system of records may be disclosed to the Department of Justice to determine whether the Freedom of Information Act requires disclosure of these records.

2. A record from this system of records may be disclosed, as a routine use, in the course of presenting evidence to a court, magistrate, or administrative tribunal, including disclosures to opposing counsel in the course of settlement negotiations.

3 A record in this system of records may be disclosed, as a routine use, to a Member of Congress submitting a request involving an individual, to whom the record pertains, when the individual has requested assistance from the Member with respect to the subject matter of the record.

4. A record in this system of records may be disclosed, as a routine use, to a contractor of the Agency having need for the information in order to perform a contract. Recipients of information shall be required to comply with the requirements of the Privacy Act of 1974, as amended, pursuant to 5 U.S.C. 552a(m).

5. A record related to an International Application filed under the Patent Cooperation Treaty in this system of records may be disclosed, as a routine use, to the International Bureau of the World Intellectual Property Organization, pursuant to the Patent CooperationTreaty.

6. A record in this system of records may be disclosed, as a routine use, to another federal agency for purposes of National Security review (35 U.S.C. 181) and for review pursuant to the Atomic Energy Act (42 U.S.C. 218(c)).

7. A record from this system of records may be disclosed, as a routine use, to the Administrator, General Services, or his/her designee, during an inspection of records conducted by GSA as part of that agency's responsibility to recommend improvements in records management practices and programs, under authority of 44 U.S.C. 2904 and 2906. Such disclosure shall be made in accordance with the GSA regulations governing inspection of records for this purpose, and any other relevant (i.e., GSA or Commerce) directive. Such disclosure shall not be used to make determinations about individuals.

8. A record from this system of records may be disclosed, as a routine use, to the public after either publication of the application pursuant to 35 U.S.C. 122(b) or issuance of a patent pursuant to 35 U.S.C. 151. Further, a record may be disclosed, subject to the limitations of 37 CFR 1.14, as a routine use, to the public if the record was filed in an application which became abandoned or in which the proceedings were terminated and which application is referenced by either a published application, an application open to public inspections or an issued patent.

9. A record from this system of records may be disclosed, as a routine use, to a Federal, State, or local law enforcement agency, if the USPTO becomes aware of a violation or potential violation of law or regulation.

CONFIGURABLE LIGHTING SYSTEM

TECHNICAL FIELD

Embodiments of the technology relate generally to lighting systems and more specifically to lighting systems that can be readily configured to produce illumination of different color temperatures.

BACKGROUND

For illumination applications, light emitting diodes (LEDs) offer substantial potential benefit associated with their energy efficiency, light quality, and compact size. However, to realize the full potential benefits offered by light emitting diodes, new technologies are needed.

With luminaires that incorporate incandescent or fluorescent technology, some configuration flexibility can be obtained by swapping lamps to meet user preferences. In such luminaires, lamp selection can provide flexibility in terms of correlated color temperature (CCT) and light output (lumens). For example, a compact fluorescent downlight might accept 6-, 32-, and 42-watt lamps in 2700, 3000, and 3500 K CCT. Additionally, changing lamp position and focal point in a reflector of an incandescent or fluorescent fixture can change the fixture spacing criteria (SC) of a luminaire.

In contrast, conventional light-emitting-diode-based luminaires can offer reduced flexibility when the luminaire's light-emitting-diode-based light source is permanently attached to the luminaire. Stocking conventional light-emitting-diode-based luminaires at distribution to accommodate multiple configurations that users often desire can entail maintaining a relatively large or cumbersome inventory.

Need is apparent for a technology to provide a light emitting diode system that can adapt to various applications, for example by delivering multiple color temperatures, multiple lumens, and multiple photometric distributions. Need further exists for a capability to enable a single luminaire to be stocked at distribution and then quickly configured according to application parameters and deployment dictates. Need further

Luminex v. Signify
Luminex Exhibit 1008
Page 015

exists for luminaires that are both energy efficient and flexible. A capability addressing one or more such needs, or some other related deficiency in the art, would support improved illumination systems and more widespread utilization of light emitting diodes in lighting applications.

DESCRIPTION OF EXAMPLE EMBODIMENTS

In some example embodiments of the disclosure, a luminaire can comprise multiple groups of light emitting diodes of different color temperatures and a constant current power supply for powering the light emitting diodes. The power supply can utilize a switching scheme that can turn each group of light emitting diodes on and off to change the color temperature of the luminaire. For example, the luminaire can comprise a 3,000 K group of light emitting diodes and a 4,000 K group of light emitting diodes. When only the 3,000 K group is on, the luminaire can deliver 3,000 K illumination. When only the 4,000 K group is on, the luminaire can deliver 4,000 K illumination. When the 3,000 K group and the 4,000 K group are both on, the luminaire can deliver 3,500 K illumination.

In some example embodiments, adjustment of lumen output to maintain constant delivered lumens across multiple correlated color temperatures or to suite application requirements can be achieved by programmable driver current and/or via turning on and off various groups of light emitting diodes. Configurable color temperature or lumen output can function in combination with integral dimming, for example to facilitate interface with building automation, sensors, and dimmers.

In some example embodiments, luminaires achieve an additional level of flexible configuration at distribution using interchangeable optics. For example, primary optics can provide medium distribution (e.g. SC = 1.0), while a diffuser or concentrator lens can be used to achieve wide distribution (e.g. SC = 1.4), and narrow distribution (e.g. SC = 0.4).

In some example embodiments, a luminaire's configuration of delivered lumens and correlated color temperatures can be set at the factory, at distribution, or in the field. To meet current and emerging code compliance, performance markings on a luminaire

Luminex v. Signify
Luminex Exhibit 1008
Page 016

can indicate and correspond to the desired setting. Economical, field-installed nameplates can identify the various electrical and optical performance ratings and, when installed, permanently program the delivered lumens and correlated color temperature. Other settings, such as dimming protocols, can likewise be configured. The interface between the nameplate and internal logic can use mechanical, electrical or optical means.

Accordingly, in some embodiments of the disclosure, the technology provides product markings and supports regulatory compliance. For example, nameplates can indicate energy codes and rebate opportunities, for compliance with product labeling and to facilitate compliance confirmation by local authorities who may have jurisdiction.

Some representative embodiments will be further described hereinafter with example reference to the accompanying drawings that describe representative embodiments of the present technology. The technology may, however, be embodied in many different forms and should not be construed as limited to the embodiments set forth herein; rather, these embodiments are provided so that this disclosure will be thorough and complete, and will fully convey the scope of the technology to those appropriately skilled in the art.

The drawings illustrate only example embodiments and are therefore not to be considered limiting of the embodiments described, as other equally effective embodiments are within the scope and spirit of this disclosure. The elements and features shown in the drawings are not necessarily drawn to scale, emphasis instead being placed upon clearly illustrating principles of the embodiments. Additionally, certain dimensions or positionings may be exaggerated to help visually convey certain principles. In the drawings, similar reference numerals among different figures designate like or corresponding, but not necessarily identical, elements.

Figures 1A, 1B, 1C, 1D, 1E, 1F, 1G, and 1H (collectively Figure 1) illustrate views of a luminaire 100 in accordance with some example embodiments of the disclosure. Figure 2 illustrates a functional block diagram of a circuit 200 that the luminaire 100 can comprise in accordance with some example embodiments of the disclosure. Figure 3 illustrates a state table for the circuit 200 in accordance with some example embodiments of the disclosure. Figure 4 illustrates a schematic of the circuit

Luminex v. Signify
Luminex Exhibit 1008
Page 017

200 in accordance with some example embodiments of the disclosure.

Referring now to Figure 1, multiple views of the luminaire 100 are provided. Figure 1A illustrates a side perspective view of the luminaire 100. Figure 1B illustrates a top perspective view of the luminaire 100. Figure 1C illustrates a view of the light-emitting bottom of the luminaire 100, showing a lens 120 in a light-emitting aperture 115 of the luminaire 100. Figure 1D illustrates a view of the light-emitting bottom of the luminaire 100 with the lens 120 removed from the light-emitting aperture 115 of the luminaire. Figure 1E illustrates a view of the light-emitting bottom of the luminaire 100 with the lens 120 and an associated reflector 130 removed from the light-emitting aperture 115 of the luminaire. Figure 1F illustrates a cutaway perspective view of the luminaire 100. Figure 1G illustrates another cutaway perspective view of the luminaire 100. Figure 1H illustrates another cutaway view of the luminaire 100.

As best seen in the views of Figures 1A and 1B, the illustrated example luminaire 100 is suited for inserting in an aperture in a ceiling to provide overhead lighting. In this example embodiment, the luminaire 100 can be characterized as an overhead light or a recessed ceiling light. Various other indoor and outdoor luminaires that may be mounted in a wide range of orientations can be substituted for the luminaire 100 illustrated in Figure 1.

The illustrated example luminaire 100 of Figure 1 comprises a circular housing 105 with a protruding rim 100 that extends circumferentially about the housing 105. When the luminaire 100 is installed in a ceiling aperture, the rim 100 circumscribes and covers the edge of the ceiling aperture for aesthetics, for support, and for blocking of debris from above the ceiling. Hanger clips 102 hold the luminaire 100 in place in installation. Electrical wiring (not illustrated) extends through a wiring aperture 103 in the housing 105.

As best seen in the views of Figures 1D, 1E, 1F, 1G, and 1H, the lens 120 of the luminaire 100 is positioned at the exit side of the light-emitting aperture 115. As illustrated, the lens 120 can mix and blend light emitted by light emitting diodes 150, 155. A reflector 130 is disposed in and lines the aperture 115 to guide and manage the emitted light between the light emitting diodes 150, 155 and the lens 120.

Luminex v. Signify
Luminex Exhibit 1008
Page 018

The light emitting diodes 150, 155 are mounted on a substrate 125 and form part of a circuit 200. As discussed in further detail below, the circuit 200 supplies electricity to the light emitting diodes 150, 155 with a level of flexibility that facilitates multiple configurations suited to different applications and installation parameters.

Turning to Figures 2, 3, and 4, some example embodiments of the circuit 200 will be discussed in further detail.

Referring now to Figure 2, this figure illustrates an embodiment of the circuit 200 in an example block diagram form. The circuit 200 comprises a DC power supply 205 for supplying electrical energy that the circuit 200 delivers to the light emitting diodes 150, 155. In an example embodiment, the circuit 200 comprises a light emitting diode driver.

Switches 210 provide an input for configuring the luminaire 100 to operate at a selected correlated color temperature. In the illustrated embodiment, the circuit 200 comprises two manual switches 210. Other embodiments may have fewer or more switches 210. In some embodiments, the switches 210 comprise dual inline pin (DIP) switches. In various embodiments, the switches 210 can be mounted to the housing 105 of the luminaire 100, for example within the housing 105 or on an exterior surface of the housing. In some embodiments, the switches 210 are mounted on the substrate 125.

As further discussed below, a controller 215 operates the light emitting diodes 150, 155 according to state of the switches 210. In some example embodiments, the controller 215 comprises logic implemented in digital circuitry, for example discrete digital components or integrated circuitry. In some example embodiments, the controller 215 utilizes microprocessor-implemented logic with instructions stored in firmware or other static or non-transitory memory.

In the illustrated embodiment, the outputs of the controller 215 are connected to two MOSFET transistors 160 to control electrical flow through two light emitting diodes 150, 150. The switches thus configure the luminaire 100 to operate with either or both of the light emitting diodes 150, 155.

Figure 3 illustrates a representative table 300 describing operation of the circuit 100 according to some example embodiments. In the example of Figure 3, the light

Luminex v. Signify
Luminex Exhibit 1008
Page 019

emitting diode 150 produces light having a correlated color temperature of 3,000 degrees Kelvin, and the light emitting diode 155 produces light having a correlated color temperature of 4,000 degrees Kelvin.

As shown in the example table 300, when both of the switches 210 are in the on state, the controller 215 causes the light emitting diode 155 to be off and the light emitting diode 150 to be on. Accordingly, the luminaire 100 emits illumination having a correlated color temperature of 3,000 degrees Kelvin.

When both of the switches 210 are in the off state, controller 215 causes the light emitting diode 155 to be on and the light emitting diode 150 to be off. Accordingly, the luminaire 100 emits illumination having a correlated color temperature of 4,000 degrees Kelvin.

When one of the switches 210 is in the off state and the other of the switches 210 is on the on state, the controller 215 causes the light emitting diode 155 to be on and the light emitting diode 150 to be on. The luminaire thus 100 emits illumination having a correlated color temperature of 3,500 degrees Kelvin.

Accordingly, the controller maps the four configurations of the two switches 210 to three states for configuring the two light emitting diodes 150, 155 for permanent or long-term operation. Mapping two switch configurations to a single mode of long-term operation can simplify configuration instructions and reduce errors during field configuration. The resulting configurations support multiple correlated color temperatures of illumination from a single luminaire 100.

Figure 4 illustrates a schematic of an example embodiment of the circuit 200. As illustrated in Figure 4 in schematic form, the circuit 200 generally conforms to the foregoing discussion of the block diagram format of Figure 3. However, the single light emitting diodes 150, 155 of Figure 3 are respectively replaced with groups of light emitting diodes 150, 155 as illustrated in Figure 4. Additionally, the schematic details include a thermal protective switch 305 for guarding against overheating.

Technology for providing a configurable a luminaire has been described. Many modifications and other embodiments of the disclosures set forth herein will come to mind to one skilled in the art to which these disclosures pertain having the benefit of the

Luminex v. Signify
Luminex Exhibit 1008
Page 020

teachings presented in the foregoing descriptions and the associated drawings. Therefore, it is to be understood that the disclosures are not to be limited to the specific embodiments disclosed and that modifications and other embodiments are intended to be included within the scope of this application. Although specific terms are employed herein, they are used in a generic and descriptive sense only and not for purposes of limitation.

Luminex v. Signify
Luminex Exhibit 1008
Page 021

CLAIMS

What is claimed is:

1. A system comprising:

an input settable in a first, a second, a third, and a fourth state;

a first light source having a first color temperature;

a second light source having a second color temperature;

a controller connected to the input, the first light source, and the second light source, the controller configured to:

power the first light source when the input is in the first state;

power the second light source when the input is in the second state;

power the first light source and the second light source when the input is in the third state; and

power the first light source and the second light source when the input is in the fourth state.

2. The system of Claim 1, wherein the input comprises a first switch and a second switch.

3. The system of Claim 2, wherein the first state comprises the first switch off and the second switch off,

wherein the second state comprises the first switch on and the second switch on,

wherein the third state comprises the first switch on and the second switch off, and

wherein the fourth state comprises the first switch off and the second switch on.

Luminex v. Signify
Luminex Exhibit 1008
Page 022

4. The system of Claim 3, wherein when the input is set to the first state, the system emits light of the first color temperature,

wherein when the input is set to the second state, the system emits light of the second color temperature,

wherein when the input is set to the third state, the system emits light of a third color temperature that is between the first color temperature and the second color temperature, and

wherein when the input is set to the fourth state, the system emits light of the third color temperature.

5. The system of Claim 1, wherein the first light source comprises a first light emitting diode, and

wherein the second light source comprises a second light emitting diode.

6. The system of Claim 1, wherein the first light source comprises a first bank of light emitting diodes, and

wherein the second light source comprises a second bank of light emitting diodes.

7. The system of Claim 1, wherein the controller comprises digital logic.

8. The system of Claim 1, wherein the controller comprises hardwired digital logic.

9. The system of Claim 1, wherein the controller comprises digital logic circuitry.

Luminex v. Signify
Luminex Exhibit 1008
Page 023

10. The system of Claim 1, wherein the input comprises dual inline pin (DIP) switches mounted on a circuit board, and

wherein the controller comprises a light emitting diode driver circuit.

Luminex v. Signify
Luminex Exhibit 1008
Page 024

11. A system comprising:

an input settable in a first plurality of states;

a circuit operable to:

map the first plurality of states into a second plurality of states, wherein the first plurality is greater than the second plurality, and

control a third plurality of light sources that have different color temperatures according to the second plurality of states.

12. The system of Claim 11, wherein mapping the first plurality of states into the second plurality of states comprises producing a state in the second plurality of states for each of two states in the first plurality of states.

13. The system of Claim 11, wherein the first plurality of states comprises a first state and a second state,

wherein the second plurality of states comprises a third state, and

wherein mapping the first plurality of states into the second plurality of states comprises mapping the first state and the second state into the third state.

14. The system of Claim 13, wherein in the third state, the third plurality of light sources collectively produce light having a color temperature that is different than each of the different color temperatures.

15. The system of Claim 11, wherein the input comprises switches disposed on a luminaire.

Luminex v. Signify
Luminex Exhibit 1008
Page 025

16. The system of Claim 11, wherein the circuit comprises:

digital logic; and

a light emitting diode driver that is controlled by the digital logic,

wherein the plurality of light sources comprise light emitting diodes,

wherein there are four states in the first plurality of states,

wherein there are three states in the second plurality of states, and

wherein there are two light sources in the third plurality of light sources.

Luminex v. Signify
Luminex Exhibit 1008
Page 026

17. A luminaire comprising:

a housing comprising an aperture;

a lens disposed at the aperture;

a first light source and a second light source that are mounted in the housing and that are oriented to emit light through the aperture for area illumination, wherein the first light source has a first color temperature and the second light source has a second color temperature; and

switches that are mounted at the housing and that are operable to configure the luminaire in a first long-term operating configuration, a second long-term operating configuration, and a third long-term operating configuration,

wherein in the first long-term operating configuration, the first light source is active, the second light source is inactive, and the luminaire is configured to emit light of the first color temperature,

wherein in the second long-term operating configuration, the first light source is inactive, the second light source is active, and the luminaire is configured to emit light of the second color temperature,

wherein in the third long-term operating configuration, the first light source is active, the second light source is active, and the luminaire is configured to emit light of a third color temperature that is between the first color temperature and the second color temperature.

18. The luminaire of Claim 17, wherein the switches have two switch states that each produces the third long-term operating configuration.

19. The luminaire of Claim 17, wherein the first light source comprises first light emitting diodes, and

wherein the second light source comprises second light emitting diodes.

Luminex v. Signify
Luminex Exhibit 1008
Page 027

20. The luminaire of Claim 17, wherein the luminaire is configured for mounting to a ceiling, and

wherein the switches are disposed in the housing.

21. The luminaire of Claim 17, wherein the switches comprise dual inline pin (DIP) switches.

Luminex v. Signify
Luminex Exhibit 1008
Page 028

22. A luminaire comprising:

a housing;

a substrate disposed in the housing;

a first plurality of light emitting diodes that are mounted to the substrate and that have a first color temperature;

a second plurality of light emitting diodes that are mounted to the substrate and that have a second color temperature; and

a plurality of manual switches that are disposed at the housing for permanently configuring the luminaire to:

provide illumination of the first color temperature by enabling the first plurality of light emitting diodes;

provide illumination of the second color temperature by enabling the second plurality of light emitting diodes; and

provide illumination of a third color temperature that is between the first color temperature and the second color temperature by enabling the first plurality of light emitting diodes and the second plurality of light emitting diodes.

23. The luminaire of Claim 22, wherein the housing comprises an aperture that is configured for emitting area illumination,

wherein the substrate is oriented to emit light through the aperture.

24. The luminaire of Claim 22, wherein the plurality of manual switches are mounted to the substrate.

25. The luminaire of Claim 22, wherein the plurality of manual switches are mounted in the housing.

Luminex v. Signify
Luminex Exhibit 1008
Page 029

25. The luminaire of Claim 22, wherein the plurality of manual switches are mounted to the housing.

26. The luminaire of Claim 22, wherein the plurality of manual switches comprise dual inline pin (DIP) switches.

27. The luminaire of Claim 22, wherein the plurality of manual switches provide two switch states, and

wherein each of the two switch states provides illumination of the third color temperature by enabling the first plurality of light emitting diodes and the second plurality of light emitting diodes.

28. The luminaire of Claim 22, wherein the housing is circular and comprises a lip configured for extending around an aperture in a ceiling.

29. The luminaire of Claim 22, wherein the housing comprises a wiring port disposed on a side of the housing.

30. The luminaire of Claim 22, wherein the housing comprises a light-emitting aperture in which the substrate is disposed.

31. The luminaire of Claim 22, further comprising:

an aperture disposed at a lower side of the housing;

a lens disposed at the aperture for refracting light emitted by the first and second light emitting diodes; and

a reflector that is disposed between the lens and the light emitting diodes and that is operative to reflect light between the first and second light emitting diodes and the lens.

Luminex v. Signify
Luminex Exhibit 1008
Page 030

32. The luminaire of Claim 17, wherein the housing is circular and comprises a lip configured for extending around an aperture in a ceiling.

33. The luminaire of Claim 17, wherein the housing comprises a wiring port disposed on a side of the housing.

34. The luminaire of Claim 17, wherein the housing forms a cavity associated with the aperture,

wherein the first and second light source are mounted to a substrate that is disposed at an end of the cavity.

35. The luminaire of Claim 34, further comprising a reflector that is disposed in the cavity between the lens and the first and second light sources, the reflector operative to reflect light between the first and second light sources and the lens.

Luminex v. Signify
Luminex Exhibit 1008
Page 031

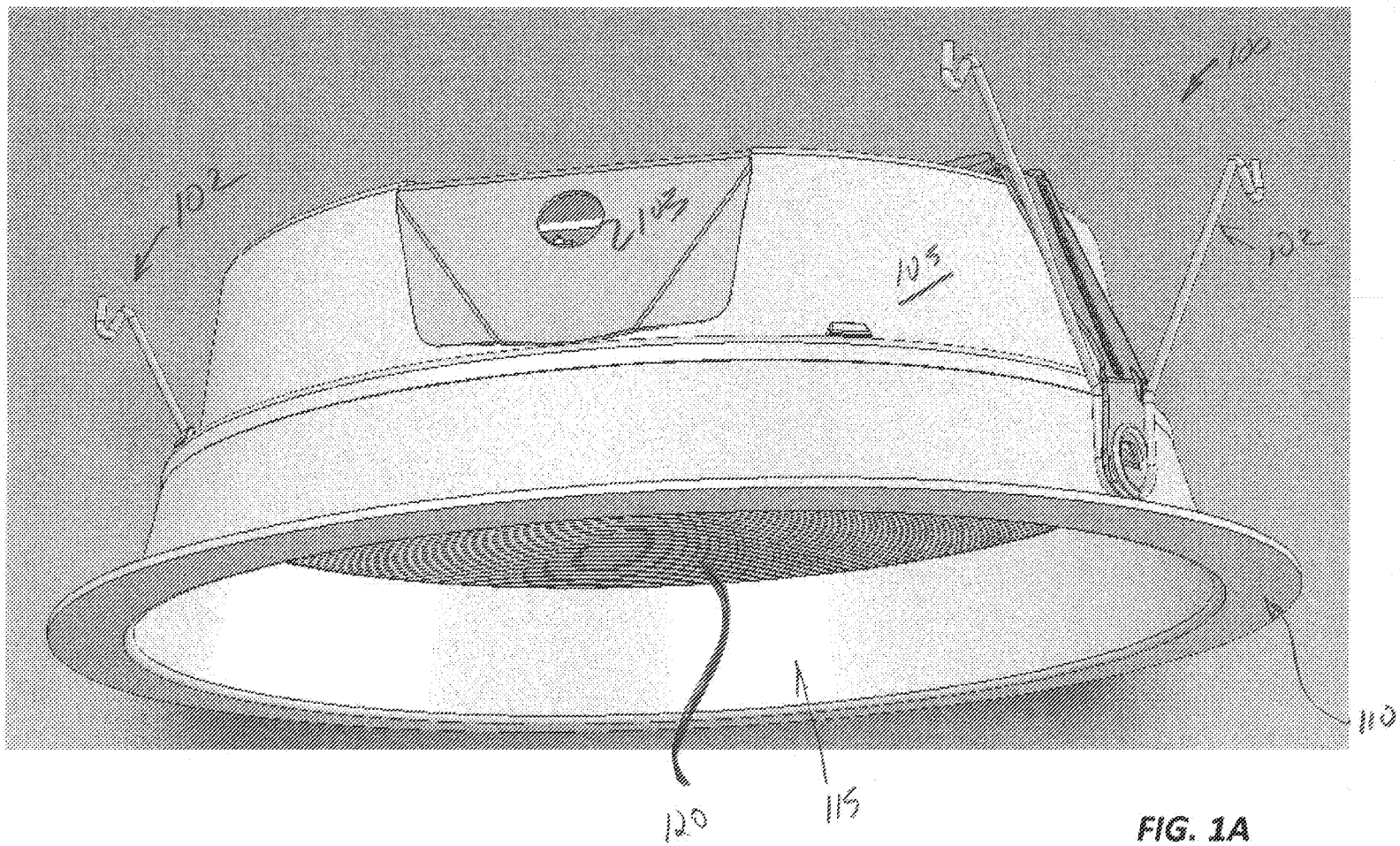

FIG. 1A

Luminex v. Signify
Luminex Exhibit 1008
Page 032

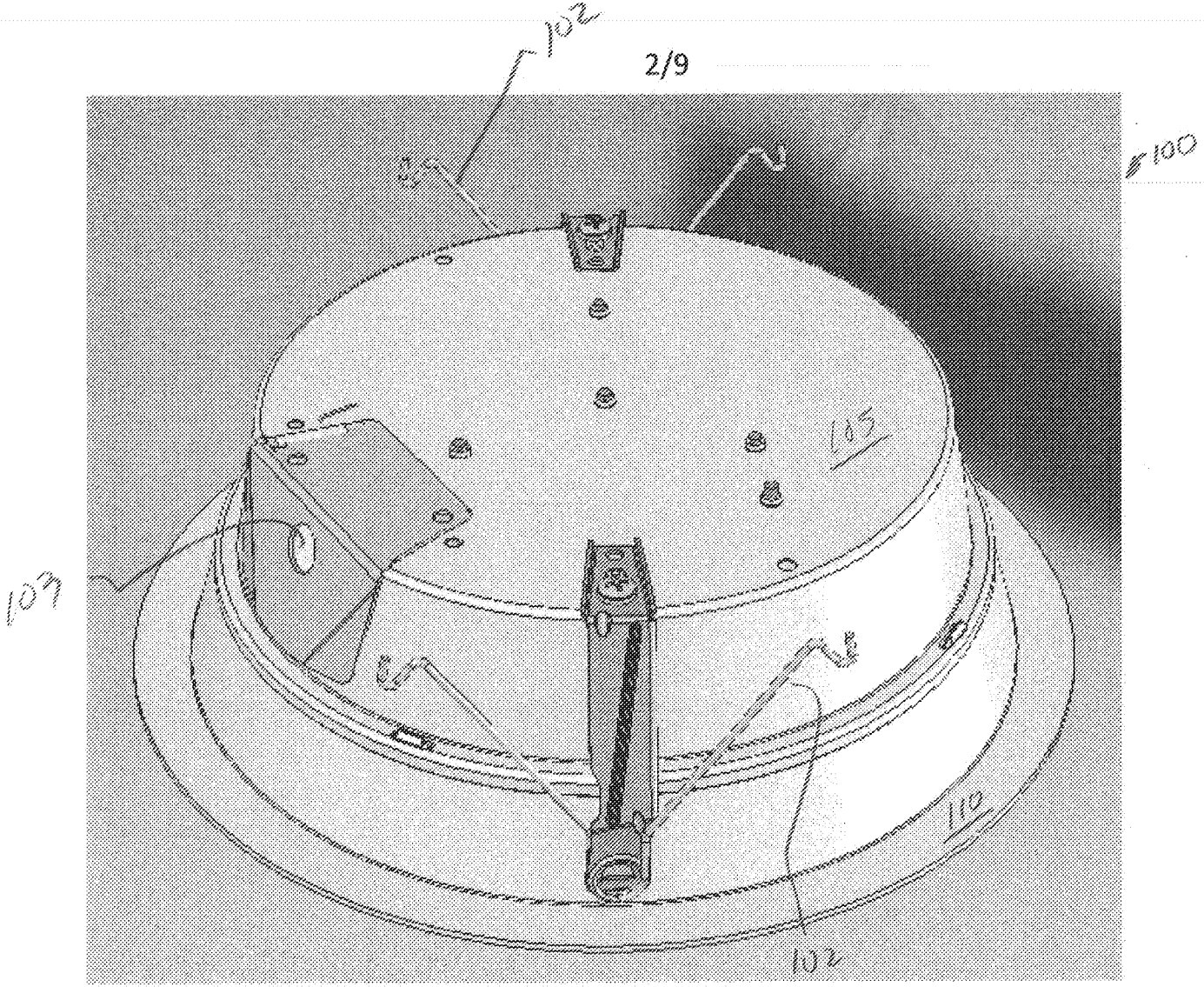

FIG. 1B

Luminex v. Signify
Luminex Exhibit 1008
Page 033

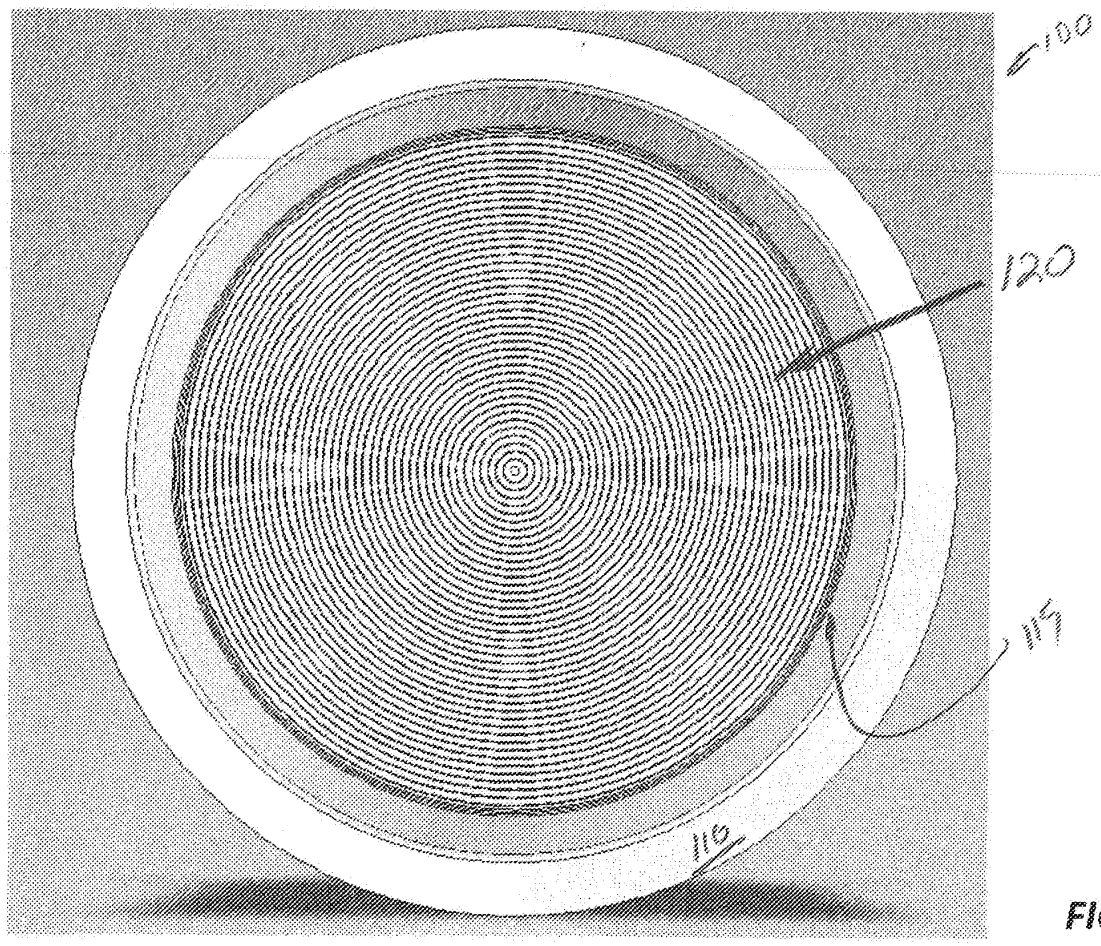

FIG. 1C

Luminex v. Signify
Luminex Exhibit 1008
Page 034

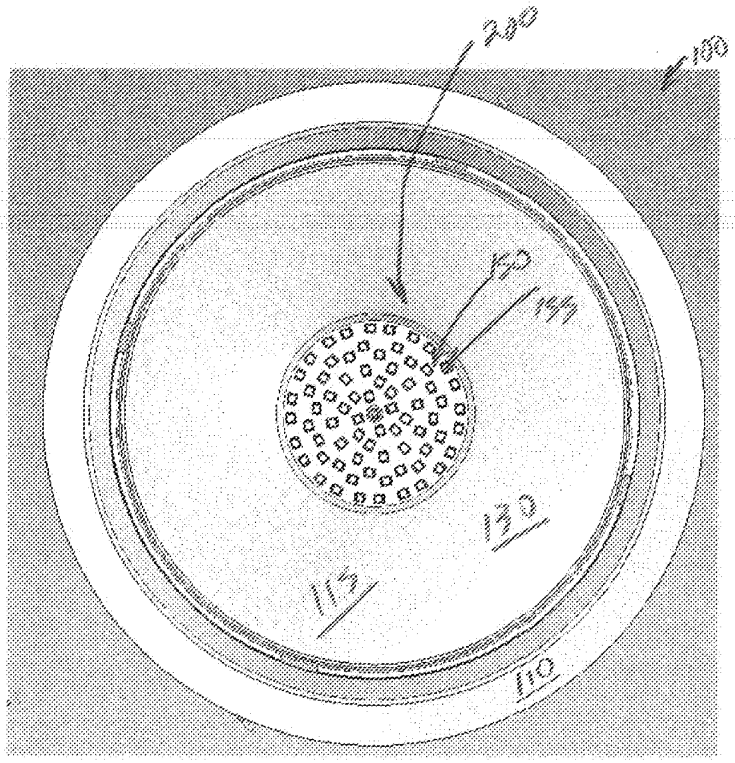

FIG. 1D

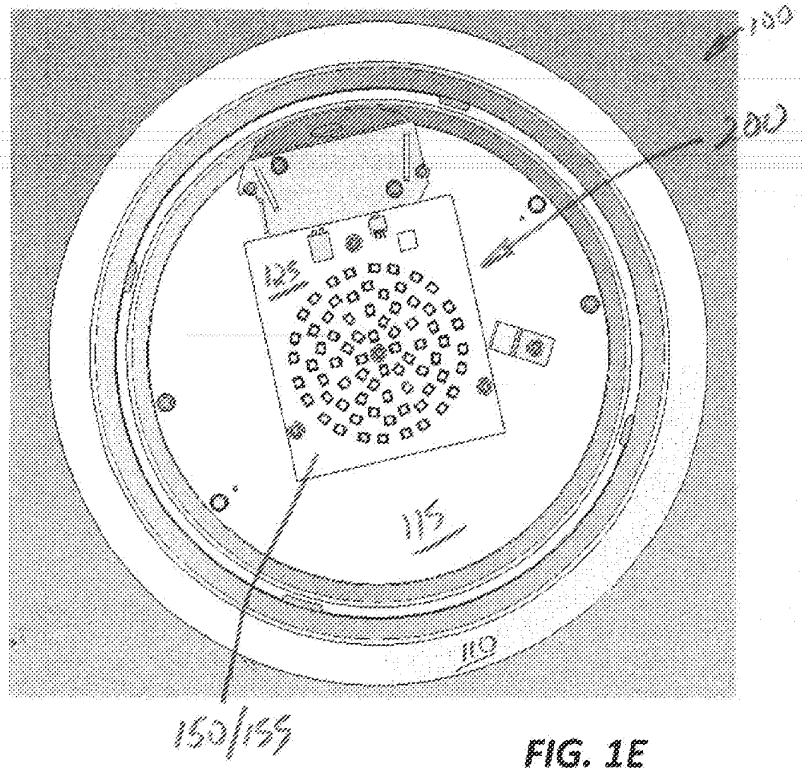

FIG. 1E

Luminex v. Signify
Luminex Exhibit 1008
Page 035

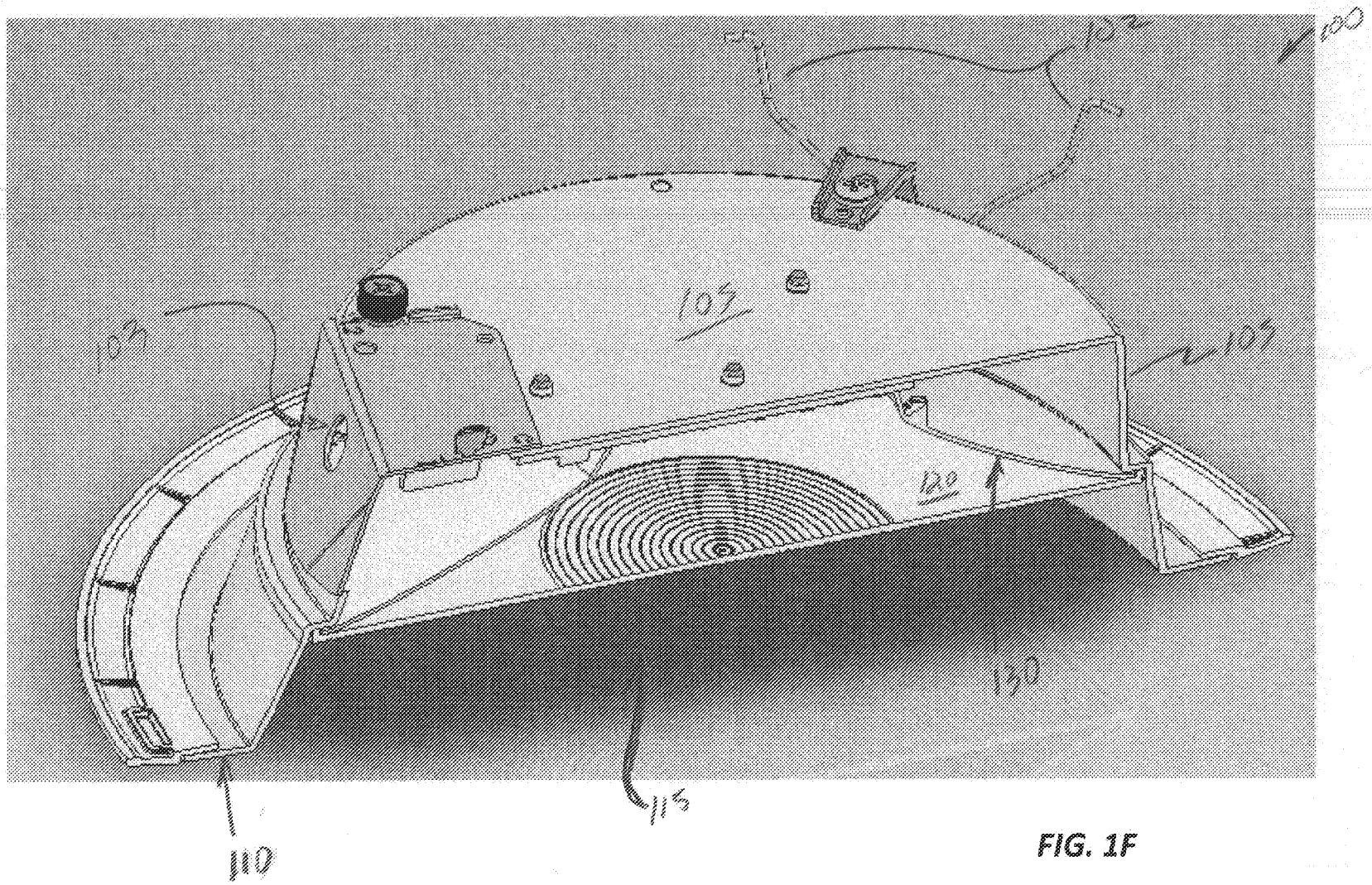

FIG. 1F

Luminex v. Signify
Luminex Exhibit 1008
Page 036

FIG. 1G

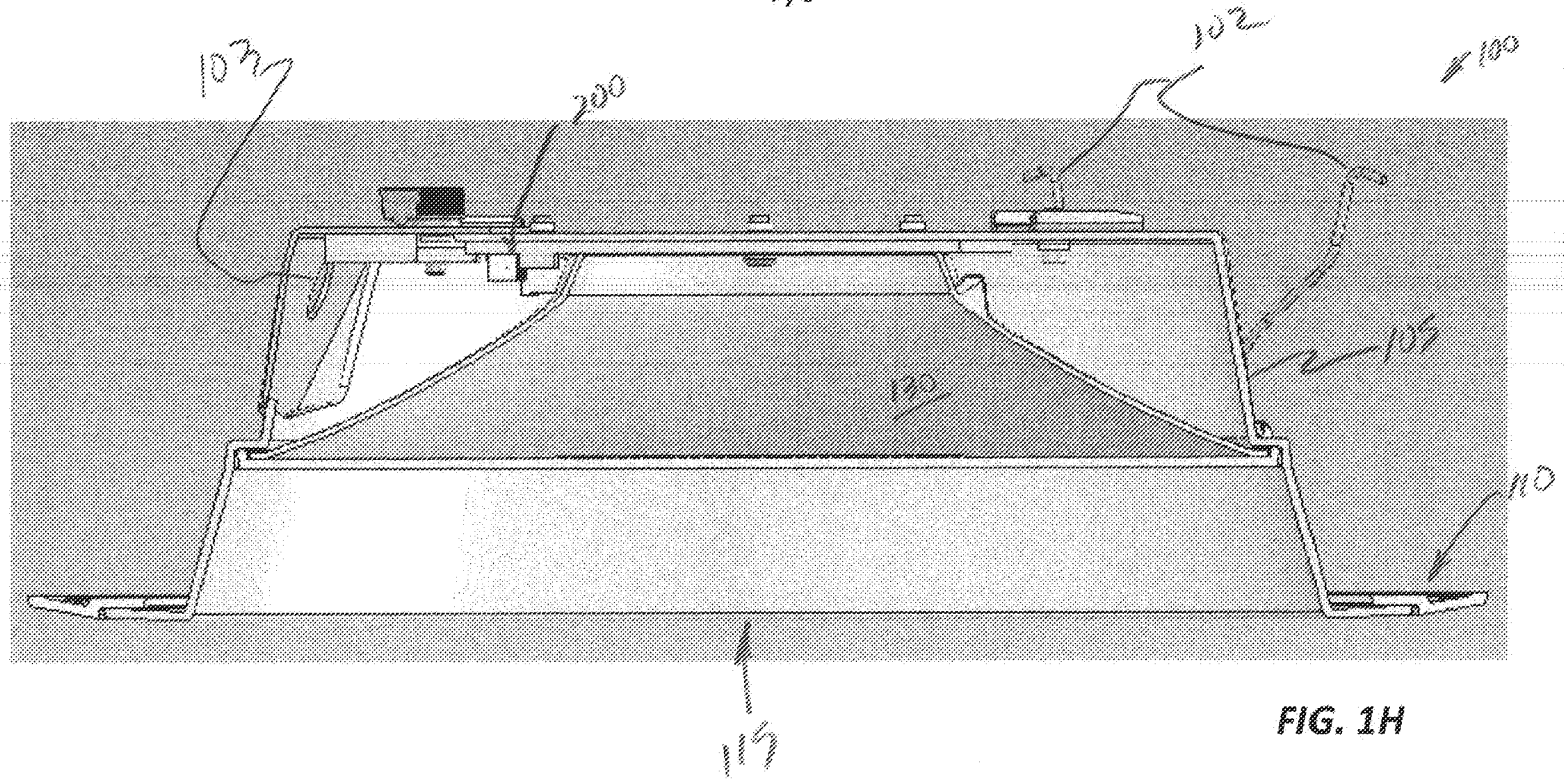

FIG. 1H

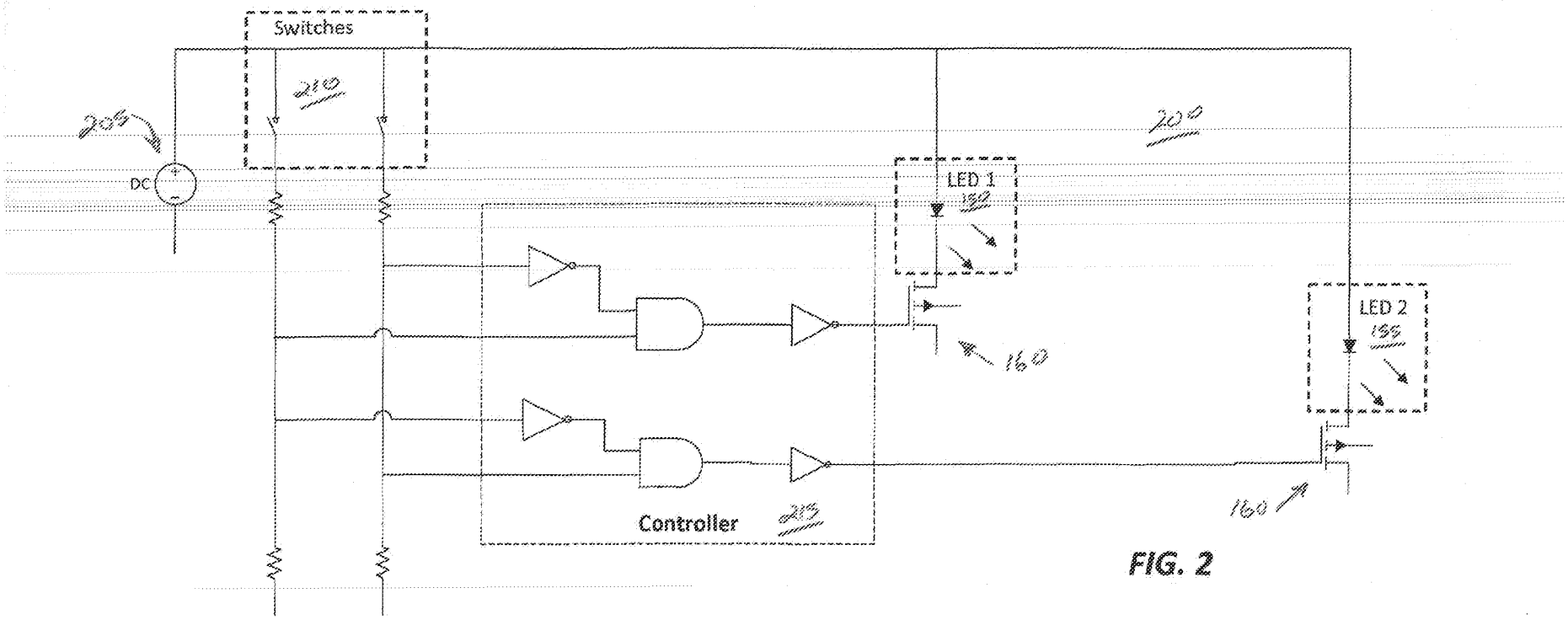

FIG. 2

300

Switch 1	Switch 2	LED 1 3,000 K	LED 2 4,000K	Resulting Color Temp
On	Off	On	On	3,500 K
Off	On	On	On	3,500 K
On	On	On	Off	3,000 K
Off	Off	Off	On	4,000 K

FIG. 3

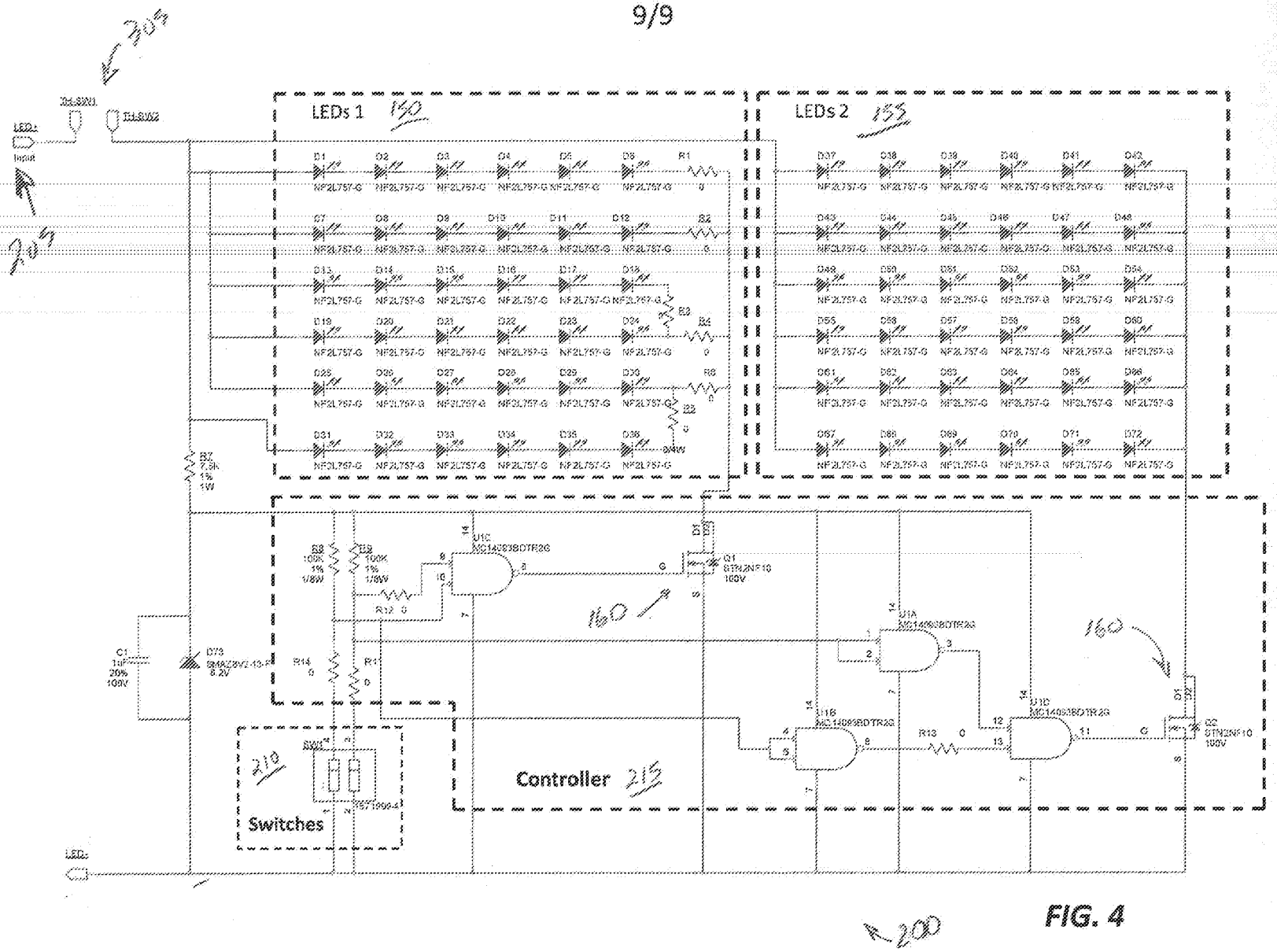

FIG. 4

Luminex v. Signify
Luminex Exhibit 1008
Page 040

Electronic Patent Application Fee Transmittal

Application Number:	
Filing Date:	
Title of Invention:	Configurable Lighting System
First Named Inventor/Applicant Name:	Steven Walter Pyshos
Filer:	Robert Timothy Neufeld
Attorney Docket Number:	13682.225614

Filed as Large Entity

Filing Fees for Provisional

Description	Fee Code	Quantity	Amount	Sub-Total in USD($)
Basic Filing:				
Provisional Application Filing	1005	1	260	260
Pages:				
Claims:				
Miscellaneous-Filing:				
Petition:				
Patent-Appeals-and-Interference:				
Post-Allowance-and-Post-Issuance:				

Description	Fee Code	Quantity	Amount	Sub-Total in USD($)
Extension-of-Time:				
Miscellaneous:				
		Total in USD ($)		**260**

Electronic Acknowledgement Receipt	
EFS ID:	24963588
Application Number:	62297424
International Application Number:	
Confirmation Number:	7138
Title of Invention:	Configurable Lighting System
First Named Inventor/Applicant Name:	Steven Walter Pyshos
Customer Number:	91764
Filer:	Robert Timothy Neufeld
Filer Authorized By:	
Attorney Docket Number:	13682.225614
Receipt Date:	19-FEB-2016
Filing Date:	
Time Stamp:	15:26:20
Application Type:	Provisional

Payment information:

Submitted with Payment	yes
Payment Type	Deposit Account
Payment was successfully received in RAM	$260
RAM confirmation Number	2060
Deposit Account	110980
Authorized User	BABER, BRUCE W
The Director of the USPTO is hereby authorized to charge indicated fees and credit any overpayment as follows:	
Charge any Additional Fees required under 37 CFR 1.16 (National application filing, search, and examination fees)	
Charge any Additional Fees required under 37 CFR 1.17 (Patent application and reexamination processing fees)	

Charge any Additional Fees required under 37 CFR 1.19 (Document supply fees)

Charge any Additional Fees required under 37 CFR 1.20 (Post Issuance fees)

Charge any Additional Fees required under 37 CFR 1.21 (Miscellaneous fees and charges)

File Listing:

Document Number	Document Description	File Name	File Size(Bytes)/ Message Digest	Multi Part /.zip	Pages (if appl.)
1	Provisional Cover Sheet (SB16)	ProvisionalSB.pdf	1477133 d5d1c9b780442ac3041d17d55590c4aa8c1218ec	no	3
Warnings:					
Information:					
2	Application Data Sheet	ads.pdf	1822693 e9ad465009094a51dbcc7358f2bbcf69395984fe	no	8
Warnings:					
Information:					
3		spec.pdf	113045 885df12027e24f27229b6744e5767e0a5319ff67	yes	17

Multipart Description/PDF files in .zip description

Document Description	Start	End
Specification	1	7
Claims	8	17

Warnings:					
Information:					
4	Drawings-only black and white line drawings	28244714_1.pdf	11102139 68a17cde738f2c9b4c277c654a91d8664b5e39bc	no	9
Warnings:					
Information:					
5	Fee Worksheet (SB06)	fee-info.pdf	29672 93791ebe321a735cfd00fc1f6902eba46fcddcf8	no	2
Warnings:					
Information:					
			Total Files Size (in bytes):	14544682	

This Acknowledgement Receipt evidences receipt on the noted date by the USPTO of the indicated documents, characterized by the applicant, and including page counts, where applicable. It serves as evidence of receipt similar to a Post Card, as described in MPEP 503.

New Applications Under 35 U.S.C. 111
If a new application is being filed and the application includes the necessary components for a filing date (see 37 CFR 1.53(b)-(d) and MPEP 506), a Filing Receipt (37 CFR 1.54) will be issued in due course and the date shown on this Acknowledgement Receipt will establish the filing date of the application.

National Stage of an International Application under 35 U.S.C. 371
If a timely submission to enter the national stage of an international application is compliant with the conditions of 35 U.S.C. 371 and other applicable requirements a Form PCT/DO/EO/903 indicating acceptance of the application as a national stage submission under 35 U.S.C. 371 will be issued in addition to the Filing Receipt, in due course.

New International Application Filed with the USPTO as a Receiving Office
If a new international application is being filed and the international application includes the necessary components for an international filing date (see PCT Article 11 and MPEP 1810), a Notification of the International Application Number and of the International Filing Date (Form PCT/RO/105) will be issued in due course, subject to prescriptions concerning national security, and the date shown on this Acknowledgement Receipt will establish the international filing date of the application.