US007178941B2

(12) **United States Patent**
Roberge et al.

(10) **Patent No.: US 7,178,941 B2**
(45) **Date of Patent: Feb. 20, 2007**

(54) **LIGHTING METHODS AND SYSTEMS**

(75) Inventors: **Brian Roberge**, Franklin, MA (US); **Colin Piepgras**, Swampscott, MA (US); **Jeffrey Hyer**, Newburyport, MA (US); **Kevin McCormick**, Cambridge, MA (US); **Peter Swai**, Quincy, MA (US); **Frederick M. Morgan**, Quincy, MA (US)

(73) Assignee: **Color Kinetics Incorporated**, Boston, MA (US)

(*) Notice: Subject to any disclaimer, the term of this patent is extended or adjusted under 35 U.S.C. 154(b) by 0 days.

(21) Appl. No.: **10/839,765**

(22) Filed: **May 5, 2004**

(65) **Prior Publication Data**

US 2005/0128751 A1 Jun. 16, 2005

Related U.S. Application Data

(60) Provisional application No. 60/467,847, filed on May 5, 2003.

(51) **Int. Cl.**
F21S 4/00 (2006.01)

(52) **U.S. Cl.** **362/225**; 362/221; 362/227; 362/240; 362/249; 362/294; 362/373; 362/800

(58) **Field of Classification Search** 362/294, 362/373, 555, 227, 249, 543–545, 800, 240, 362/221, 225

See application file for complete search history.

(56) **References Cited**

U.S. PATENT DOCUMENTS

2,909,097	A	10/1959	Alden et al.
3,318,185	A	5/1967	Kott
3,561,719	A	2/1971	Grindle
3,586,936	A	6/1971	McLeroy
3,601,621	A	8/1971	Ritchie
3,643,088	A	2/1972	Osteen et al.
3,746,918	A	7/1973	Drucker et al.
3,818,216	A	6/1974	Larraburu
3,832,503	A	8/1974	Crane
3,858,086	A	12/1974	Anderson et al.
3,909,670	A	9/1975	Wakamatsu et al.
3,924,120	A	12/1975	Cox, III
3,949,213	A	4/1976	Paitchell
3,958,885	A	5/1976	Stockinger et al.
3,974,637	A	8/1976	Bergey et al.

(Continued)

FOREIGN PATENT DOCUMENTS

AU	6 267 9	12/1996

(Continued)

OTHER PUBLICATIONS

Hewlett Packard Components, "Solid State Display and Optoelectronics Designer's Catalog," pp. 30-43, Jul. 1973.

(Continued)

Primary Examiner—Stephan F Husar
Assistant Examiner—Meghan K. Dunwiddie
(74) *Attorney, Agent, or Firm*—Wolf, Greenfield & Sacks, P.C.

(57) **ABSTRACT**

Methods and systems are provided for lighting systems, including high output linear lighting systems for various environments. The linear lighting systems may include power systems for driving light sources in high-voltage environments.

22 Claims, 75 Drawing Sheets

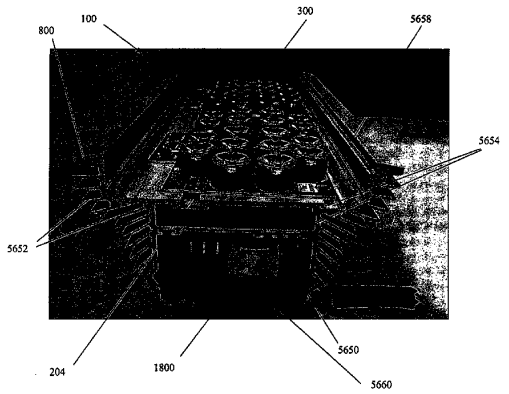

U.S. PATENT DOCUMENTS

4,001,571	A	1/1977	Martin
4,054,814	A	10/1977	Fegley et al.
4,070,568	A	1/1978	Gala
4,082,395	A	4/1978	Donato et al.
4,096,349	A	6/1978	Donato
4,241,295	A	12/1980	Williams, Jr.
4,271,408	A	6/1981	Teshima et al.
4,272,689	A	6/1981	Crosby et al.
4,273,999	A	6/1981	Pierpoint
4,298,869	A	11/1981	Okuno
4,329,625	A	5/1982	Nishizawa et al.
4,339,788	A	7/1982	White et al.
4,367,464	A	1/1983	Kurahashi et al.
4,388,567	A	6/1983	Yamazaki et al.
4,388,589	A	6/1983	Molldrem, Jr.
4,392,187	A	7/1983	Bornhorst
4,420,711	A	12/1983	Takahashi et al.
4,450,511	A	5/1984	Micha
4,500,796	A	2/1985	Quin
4,597,033	A	6/1986	Meggs et al.
4,622,881	A	11/1986	Rand
4,625,152	A	11/1986	Nakai
4,635,052	A	1/1987	Aoike et al.
4,647,217	A	3/1987	Havel
4,654,629	A	3/1987	Bezos et al.
4,656,398	A	4/1987	Michael et al.
4,668,895	A	5/1987	Schneiter
4,682,079	A	7/1987	Sanders et al.
4,686,425	A	8/1987	Havel
4,687,340	A	8/1987	Havel
4,688,154	A	8/1987	Nilssen
4,688,869	A	8/1987	Kelly
4,695,769	A	9/1987	Schweickardt
4,701,669	A	10/1987	Head et al.
4,705,406	A	11/1987	Havel
4,707,141	A	11/1987	Havel
4,727,289	A	2/1988	Uchida
4,740,882	A	4/1988	Miller
4,753,148	A	6/1988	Johnson
4,771,274	A	9/1988	Havel
4,780,621	A	10/1988	Bartleucci et al.
4,818,072	A	4/1989	Mohebban
4,833,542	A	5/1989	Hara et al.
4,837,565	A	6/1989	White
4,843,627	A	6/1989	Stebbins
4,845,481	A	7/1989	Havel
4,845,745	A	7/1989	Havel
4,857,801	A	8/1989	Farrell
4,858,088	A	8/1989	Agabekov
4,863,223	A	9/1989	Weissenbach et al.
4,870,325	A	9/1989	Kazar
4,874,320	A	10/1989	Freed et al.
4,887,074	A	12/1989	Simon et al.
4,922,154	A	5/1990	Cacoub
4,934,852	A	6/1990	Havel
4,962,687	A	10/1990	Belliveau et al.
4,965,561	A	10/1990	Havel
4,973,835	A	11/1990	Kurosu et al.
4,979,081	A	12/1990	Leach et al.
4,980,806	A	12/1990	Taylor et al.
4,992,704	A	2/1991	Stinson
5,003,227	A	3/1991	Nilssen
5,008,595	A	4/1991	Kazar
5,008,788	A	4/1991	Palinkas
5,010,459	A	4/1991	Taylor et al.
5,027,262	A	6/1991	Freed
5,034,807	A	7/1991	Von Kohorn
5,036,248	A	7/1991	McEwan et al.
5,038,255	A	8/1991	Nishihashi et al.
5,072,216	A	12/1991	Grange
5,078,039	A	1/1992	Tulk et al.
5,083,063	A	1/1992	Brooks
5,089,748	A	2/1992	Ihms
5,126,634	A	6/1992	Johnson
5,128,595	A	7/1992	Hara
5,130,909	A	7/1992	Gross
5,134,387	A	7/1992	Smith et al.
5,142,199	A	8/1992	Elwell
5,154,641	A	10/1992	McLaughlin
5,161,879	A	11/1992	McDermott
5,164,715	A	11/1992	Kashiwabara et al.
5,184,114	A	2/1993	Brown
5,194,854	A	3/1993	Havel
5,209,560	A	5/1993	Taylor et al.
5,225,765	A	7/1993	Callahan et al.
5,226,723	A	7/1993	Chen
5,254,910	A	10/1993	Yang
5,256,948	A	10/1993	Boldin et al.
5,268,828	A	12/1993	Miura
5,278,542	A	1/1994	Smith et al.
5,282,121	A	1/1994	Bornhorst et al.
5,294,865	A	3/1994	Haraden
5,301,090	A	4/1994	Hed
5,307,295	A	4/1994	Taylor et al.
5,329,431	A	7/1994	Taylor et al.
5,350,977	A	9/1994	Hamamoto et al.
5,357,170	A	10/1994	Luchaco et al.
5,371,618	A	12/1994	Tai et al.
5,374,876	A	12/1994	Horibata et al.
5,375,043	A	12/1994	Tokunaga
5,388,357	A	2/1995	Malita
5,402,702	A	4/1995	Hata
5,404,282	A	4/1995	Klinke et al.
5,406,176	A	4/1995	Sugden
5,410,328	A	4/1995	Yoksza et al.
5,412,284	A	5/1995	Moore et al.
5,412,552	A	5/1995	Fernandes
5,418,697	A	5/1995	Chiou
5,420,482	A	5/1995	Phares
5,421,059	A	6/1995	Leffers, Jr.
5,432,408	A	7/1995	Matsuda et al.
5,436,535	A	7/1995	Yang
5,450,301	A	9/1995	Waltz et al.
5,461,188	A	10/1995	Drago et al.
5,463,280	A	10/1995	Johnson
5,465,144	A	11/1995	Parker et al.
5,489,827	A	2/1996	Xia
5,491,402	A	2/1996	Small
5,504,395	A	4/1996	Johnson et al.
5,519,496	A	5/1996	Borgert et al.
5,528,474	A	6/1996	Roney et al.
5,545,950	A	8/1996	Cho
5,559,681	A	9/1996	Duarte
5,561,346	A	10/1996	Byrne
5,575,459	A	11/1996	Anderson
5,575,554	A	11/1996	Guritz
5,592,051	A	1/1997	Korkala
5,607,227	A	3/1997	Yasumoto et al.
5,614,788	A	3/1997	Mullins et al.
5,621,282	A	4/1997	Haskell
5,634,711	A	6/1997	Kennedy et al.
5,640,061	A	6/1997	Bornhorst et al.
5,642,129	A	6/1997	Zavracky et al.
5,653,529	A	8/1997	Spocharski
5,673,059	A	9/1997	Zavracky et al.
5,684,309	A	11/1997	McIntosh et al.
5,688,042	A	11/1997	Madadi et al.
5,701,058	A	12/1997	Roth
5,712,650	A	1/1998	Barlow
5,721,471	A	2/1998	Begemann et al.
5,734,590	A	3/1998	Tebbe
5,751,118	A	5/1998	Mortimer
5,752,766	A	5/1998	Bailey et al.
5,769,527	A	6/1998	Taylor et al.

5,803,579 A 9/1998 Turnbull et al.
5,808,689 A 9/1998 Small
5,812,105 A 9/1998 Van de Ven
5,821,695 A 10/1998 Vilanilam et al.
5,836,676 A 11/1998 Ando et al.
5,848,837 A 12/1998 Gustafson
5,850,126 A 12/1998 Kanbar
5,851,063 A 12/1998 Doughty et al.
5,852,658 A 12/1998 Knight et al.
5,854,542 A 12/1998 Forbes
RE36,030 E 1/1999 Nadeau
5,859,508 A 1/1999 Ge et al.
5,896,010 A 4/1999 Mikolajczak et al.
5,907,742 A 5/1999 Johnson et al.
5,912,653 A 6/1999 Fitch
5,924,784 A 7/1999 Chliwnyj et al.
5,927,845 A 7/1999 Gustafson et al.
5,946,209 A 8/1999 Eckel et al.
5,952,680 A 9/1999 Strite
5,959,547 A 9/1999 Tubel et al.
5,961,201 A 10/1999 Gismondi
5,963,185 A 10/1999 Havel
5,974,553 A 10/1999 Gandar
5,980,064 A 11/1999 Metroyanis
6,008,783 A 12/1999 Kitagawa et al.
6,016,038 A 1/2000 Mueller et al.
6,018,237 A 1/2000 Havel
6,020,825 A 2/2000 Chansky et al.
6,025,550 A 2/2000 Kato
6,031,343 A 2/2000 Recknagel et al.
6,056,420 A 5/2000 Wilson et al.
6,068,383 A 5/2000 Robertson et al.
6,072,280 A 6/2000 Allen
6,074,074 A 6/2000 Marcus
6,092,915 A 7/2000 Rensch
6,095,661 A 8/2000 Lebens et al.
6,097,352 A 8/2000 Zavracky et al.
6,127,783 A 10/2000 Pashley et al.
6,132,072 A 10/2000 Turnbull et al.
6,135,604 A 10/2000 Lin
6,150,774 A 11/2000 Mueller et al.
6,158,882 A 12/2000 Bischoff, Jr.
6,166,496 A 12/2000 Lys et al.
6,183,086 B1 2/2001 Neubert
6,183,104 B1 2/2001 Ferrara
6,184,628 B1 2/2001 Ruthenberg
6,196,471 B1 3/2001 Ruthenberg
6,198,642 B1 * 3/2001 Kociecki 363/37
6,211,626 B1 4/2001 Lys et al.
6,215,409 B1 4/2001 Blach
6,237,290 B1 5/2001 Tokomoto et al.
6,250,774 B1 6/2001 Begemann et al.
6,273,338 B1 8/2001 White
6,283,612 B1 9/2001 Hunter
6,292,901 B1 9/2001 Lys et al.
6,318,878 B1 * 11/2001 Dorfman 362/189
6,323,832 B1 11/2001 Nishizawa et al.
6,329,764 B1 12/2001 Van de Ven
6,330,111 B1 12/2001 Myers
6,331,915 B1 12/2001 Myers
6,340,868 B1 1/2002 Lys et al.
6,361,186 B1 3/2002 Slayden
6,369,525 B1 4/2002 Chang et al.
6,371,637 B1 4/2002 Atchinson et al.
6,402,347 B1 6/2002 Maas et al.
6,445,139 B1 9/2002 Marshall et al.
6,448,550 B1 9/2002 Nishimura
6,459,919 B1 10/2002 Lys et al.
6,478,453 B2 11/2002 Lammers et al.
6,495,964 B1 12/2002 Muthu et al.
6,528,954 B1 3/2003 Lys et al.
6,548,967 B1 4/2003 Dowling et al.
6,550,952 B1 4/2003 Hulse et al.
6,551,282 B1 4/2003 Exline et al.
6,561,690 B2 5/2003 Balestriero et al.
6,566,824 B2 5/2003 Panagotacos et al.
6,577,080 B2 6/2003 Lys et al.
6,582,103 B1 6/2003 Popovich et al.
6,592,238 B2 7/2003 Cleaver et al.
6,596,977 B2 7/2003 Muthu et al.
6,608,453 B2 8/2003 Morgan et al.
6,624,597 B2 9/2003 Dowling et al.
6,636,003 B2 10/2003 Rahm et al.
6,683,423 B2 1/2004 Cunningham
6,717,376 B2 4/2004 Lys et al.
6,720,745 B2 4/2004 Mueller et al.
6,749,310 B2 6/2004 Pohlert
6,815,724 B2 11/2004 Dry
2001/0033488 A1 10/2001 Chliwnyj et al.
2002/0038157 A1 3/2002 Dowling et al.
2002/0044066 A1 4/2002 Dowling et al.
2002/0047569 A1 4/2002 Dowling et al.
2002/0048169 A1 4/2002 Dowling et al.
2002/0057061 A1 5/2002 Mueller et al.
2002/0060526 A1 5/2002 Timmermans et al.
2002/0070688 A1 6/2002 Dowling et al.
2002/0074559 A1 6/2002 Dowling et al.
2002/0078221 A1 6/2002 Blackwell et al.
2002/0101197 A1 8/2002 Lys et al.
2002/0114155 A1 * 8/2002 Katogi et al. 362/219
2002/0126064 A1 9/2002 Yen
2002/0130627 A1 9/2002 Dowling et al.
2002/0145394 A1 10/2002 Morgan et al.
2002/0145869 A1 10/2002 Dowling
2002/0152045 A1 10/2002 Dowling et al.
2002/0153851 A1 10/2002 Dowling et al.
2002/0158583 A1 10/2002 Lys et al.
2002/0163316 A1 11/2002 Dowling et al.
2002/0171365 A1 11/2002 Morgan et al.
2002/0171377 A1 11/2002 Mueller et al.
2002/0171378 A1 11/2002 Morgan et al.
2002/0176259 A1 11/2002 Ducharme
2002/0195975 A1 12/2002 Dowling et al.
2003/0011538 A1 1/2003 Lys et al.
2003/0028260 A1 2/2003 Blackwell
2003/0057884 A1 3/2003 Dowling et al.
2003/0057886 A1 3/2003 Lys et al.
2003/0057887 A1 3/2003 Dowling et al.
2003/0057890 A1 3/2003 Lys et al.
2003/0076281 A1 4/2003 Morgan et al.
2003/0100837 A1 5/2003 Lys et al.
2003/0107887 A1 6/2003 Eberl
2003/0133292 A1 7/2003 Mueller et al.
2003/0137258 A1 7/2003 Piepgras et al.
2003/0198061 A1 10/2003 Chambers et al.
2003/0222587 A1 12/2003 Dowling et al.
2004/0032226 A1 2/2004 Lys
2004/0036006 A1 2/2004 Dowling
2004/0052076 A1 3/2004 Mueller et al.
2004/0066652 A1 4/2004 Hong
2004/0090787 A1 5/2004 Dowling et al.
2004/0105261 A1 6/2004 Ducharme et al.
2004/0109327 A1 * 6/2004 Coushaine et al. 362/555
2004/0130909 A1 7/2004 Mueller et al.
2004/0160199 A1 * 8/2004 Morgan et al. 315/312

FOREIGN PATENT DOCUMENTS

CA 2 178 432 12/1996
CA 2 134 848 11/1998
DE 3438154 A1 4/1986
DE 03837313 5/1989
DE 03805998 9/1989
DE 3925767 A1 4/1990
DE 3917101 11/1990
DE 3916875 12/1990

DE	4041338	A1	7/1992
DE	4130576	C1	3/1993
DE	9414689		2/1995
DE	4419006	A1	12/1995
DE	29607270	U1	8/1996
DE	19525897		10/1996
DE	29620583	U1	3/1997
DE	19651140	A1	6/1997
DE	19602891	A1	7/1997
EP	482680	A1	4/1992
EP	0495305	A2	7/1992
EP	567280	B1	10/1993
EP	0534710	B1	1/1996
EP	734082	A2	9/1996
EP	0752632	A2	1/1997
EP	0752632	A3	8/1997
EP	0823812	A2	2/1998
EP	0935234	A1	8/1999
EP	0942631	A2	9/1999
EP	1020352	A2	7/2000
EP	1113215	A2	7/2001
EP	1162400	A2	12/2001
JP	06043830		2/1994
JP	7-39120		7/1995
JP	8-106264		4/1996
JP	8-007611		12/1996
KR	1019910009812		11/1991
WO	WO 99/30537	A1	6/1999
WO	WO 01/73818	A1	10/2001

OTHER PUBLICATIONS

INTEC Research, TRACKSPOT, http://www.intec-research.com/trackspot.htm, pp. 1-4, Apr. 24, 2003.
SHARP, Optoelectronics Data Book, pp. 1096-1097, 1994/1995.
About DMX-512 Lighting Protocol—Pangolin Laser Systems, pp. 1-4, Apr. 7, 2003.
Furry, Kevin and Somerville, Chuck, Affidavit, LED effects, Feb. 22, 2002, pp. 24-29.
Putman, Peter H., "The Allure of LED," www.sromagazine.biz, Jun./Jul. 2002, pp. 47-52.
Bremer, Darlene, "LED Advancements Increase Potential," www.ecmag.com, Apr. 2002, p. 115.
Longo, Linda, "LEDS Lead the Way," Home Lighting & Accessories, Jun. 2002, pp. 226-234.
"LM117/LM317A/LM317 3-Terminal Adjustable Regulator", National Semiconductor Corporation, May 1997, pp. 1-20.
"DS96177 RS-485 / RS-422 Differential Bus Repeater", National Semiconductor Corporation, Feb. 1996, pp. 1-8.
"DS2003 / DA9667 / DS2004 High Current / Voltage Darlington Drivers", National Semiconductor Corporation, Dec. 1995, pp. 1-8.
"LM140A / LM140 / LM340A / LM7800C Series 3—Terminal Positive Regulators", National Semiconductor Corporation, Jan. 1995, pp. 1-14.
Case No. 6:02-cv-270-ORL-19JGG in the United States District Court, Middle District of Florida, Orlando Division, Plaintiff's Amended Verified Complaint.
Case No. 6:02-cv-270-ORL-19JGG in the United States District Court, Middle District of Florida, Orlando Division, Defendant's Answer and Counteclaims.
Case No. 6:02-cv-270-ORL-19JGG in the United States District Court, Middle District of Florida, Orlando Division, Plaintiff's Answer to Counterclaims.
Case No. 6:02-cv-270-ORL-19JGG in the United States District Court, Middle District of Florida, Orlando Division, Plaintiff's Answer to Defendant's First Set of Interrogatories w/Exhibit 1.
Case No. 02 CV 11137MEL in the United States District Court, District of Massachusetts, Plaintiff's Complaint and Jury Demand.
Case No. 02 CV 11137MEL in the United States District Court, District of Massachusetts, Defendant's Answer and Affirmative Defenses.
High End Systems, Inc., Trackspot User Manual, Aug. 1997, Excerpts (Cover, Title page, pp. ii through iii and 2-13 through 2-14).
Artistic License, AL4000 DMX512 Processors, Revision 3.4, Jun. 2000, Excerpts (Cover, pp. 7,92 through 102).
Artistic License, Miscellaneous Drawings (3 sheets) Jan. 12, 1995.
Artistic License, Miscellaneous Documents (2 sheets Feb. 1995 and Apr. 1996).
* Newnes's Dictionary of Electronics, Fourth Edition, S.W. Amos, et al., Preface to First Edition, pp. 278-279.
"http://www.luminus.cx/projects/chaser", (Nov. 13, 2000), pp. 1-16.
iLight Technologies, "Explore the iLight Possibilities", http:///www.ilight-tech.com, Sep. 7, 2004, 1 page.
iLight Technologies, "Curved or straight in white or color", http://www.ilight-tech.com/products.htm, Sep. 7, 2004, 1 page.
iLight Technologies, "Curved or straight in white or color",/products_white.htm, Sep. 7, 2004, 1 page.
iLight Technologies, "Curved or straight in white or color",/products_color.htm, Sep. 7, 2004, 1 page.
iLight Technologies, "Curved or straight in white or color",/products_signs.htm, Sep. 7, 2004, 1 page.
Co-Pending U.S. Appl. No. 09/333,739, filed Jun. 15, 1999, entitled "Diffuse Illumination Systems and Methods,".
Co-Pending U.S. Appl. No. 10/245,786, filed Sep. 17, 2002, Colin Piepgras, et al., entitled "Light Emitting Diode Based Products,".

* cited by examiner

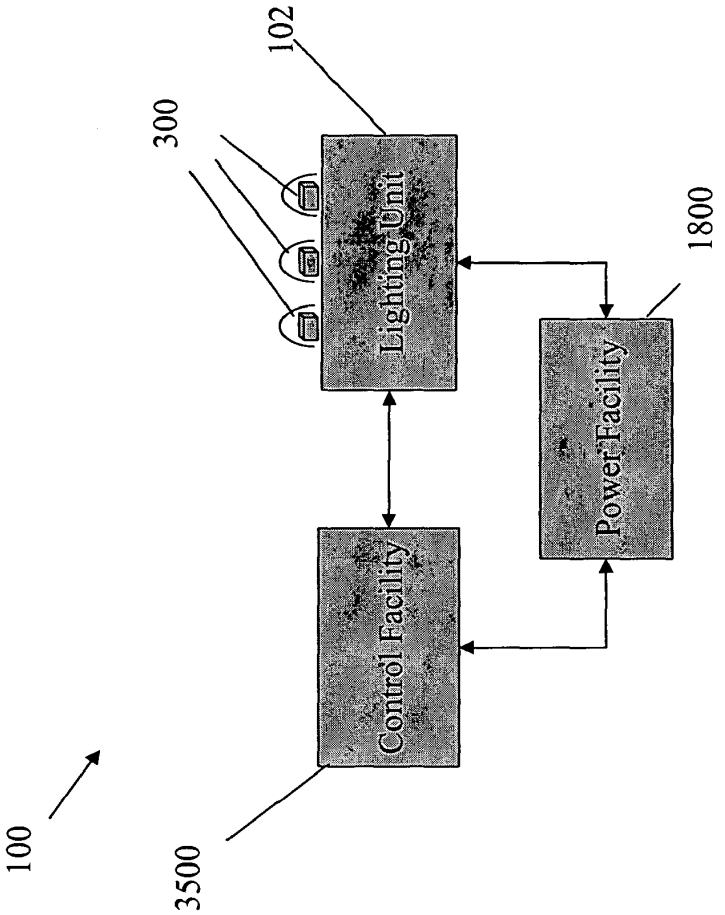
100
3500
Control Facility
300
102
Lighting Unit
Power Facility
1800

Fig. 1

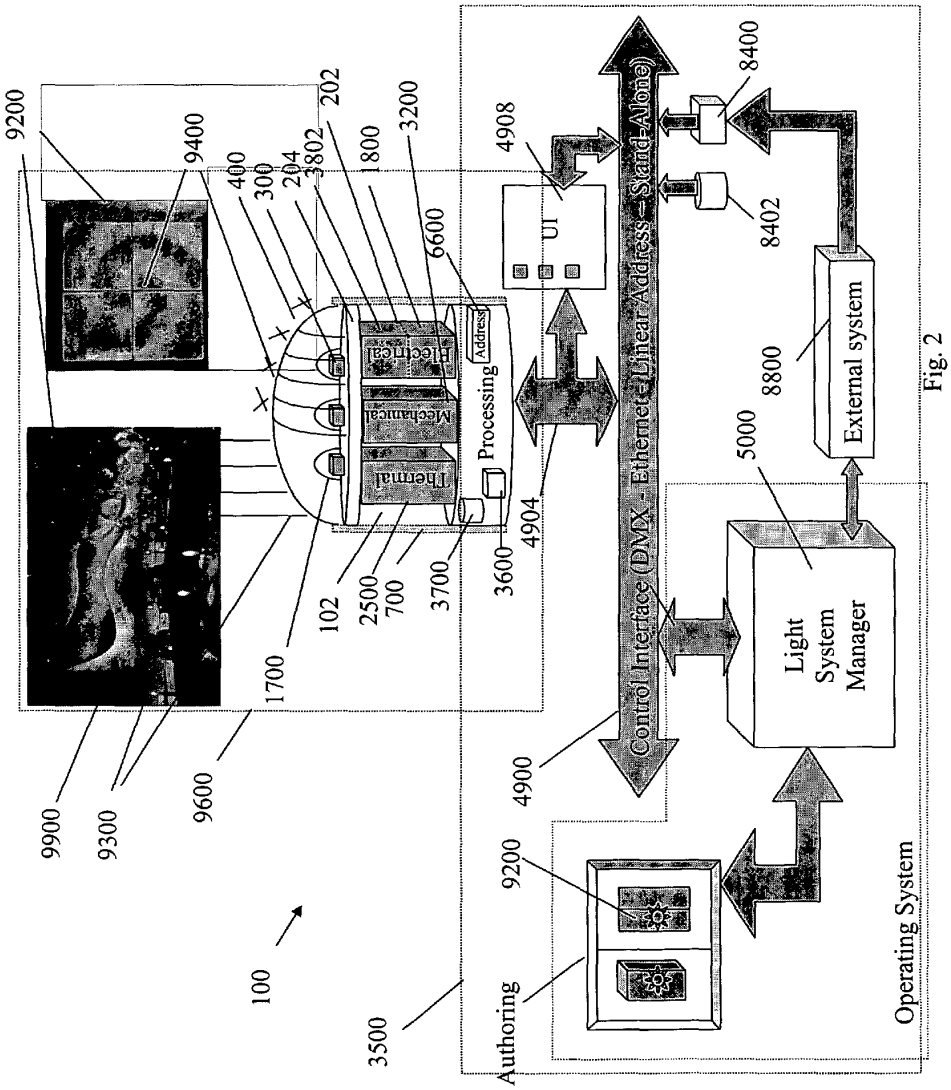
9200
9400
400
300
204
3802
202
1800
3200
6600
4908
UI
Address
Processing
Electrical
Mechanical
Thermal
102
2500
700
3700
3600
4904
1700
9900
9300
9600
100
3500
Authoring
9200
4900
Control Interface (DMX - Ethernet - Linear Address - Stand-Alone)
8400
8402
8800
External system
5000
Light System Manager
Operating System

Fig. 2

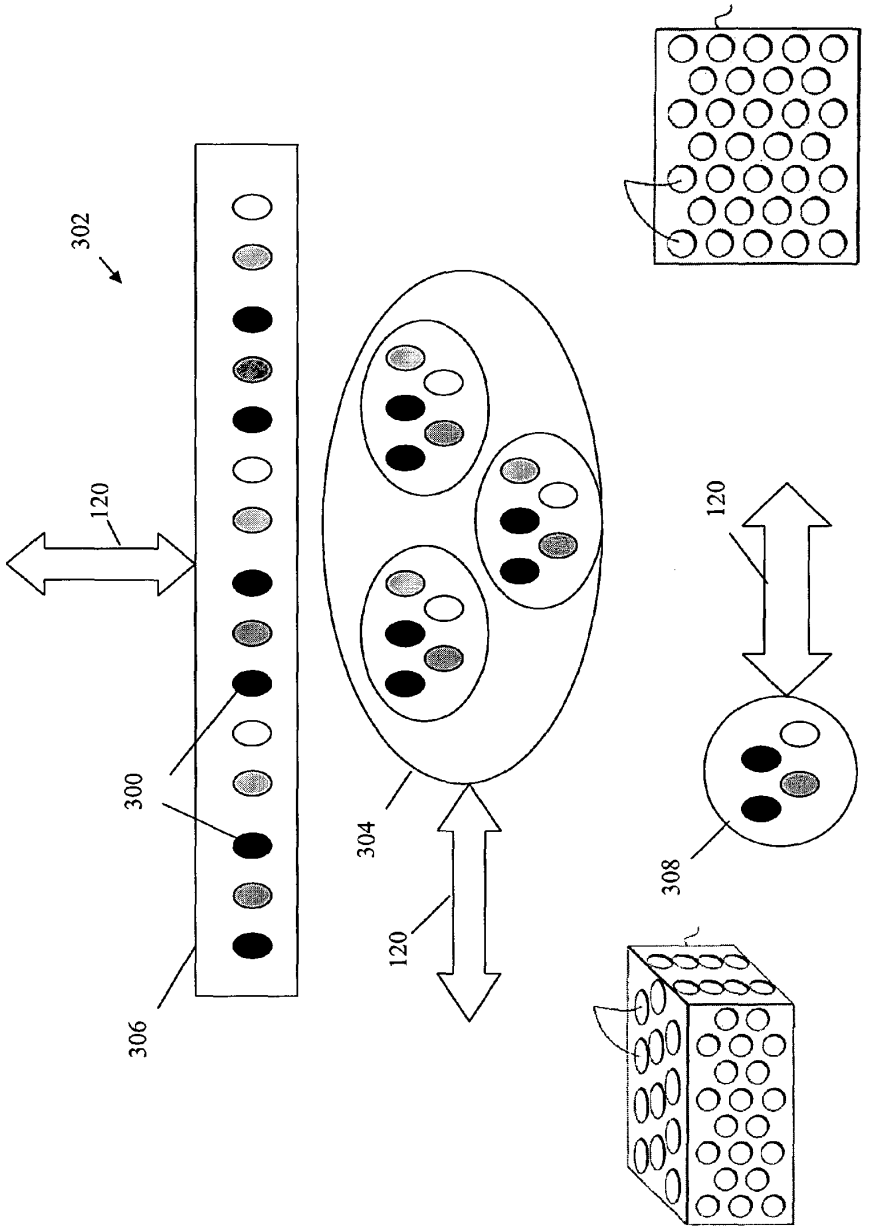

Fig. 3

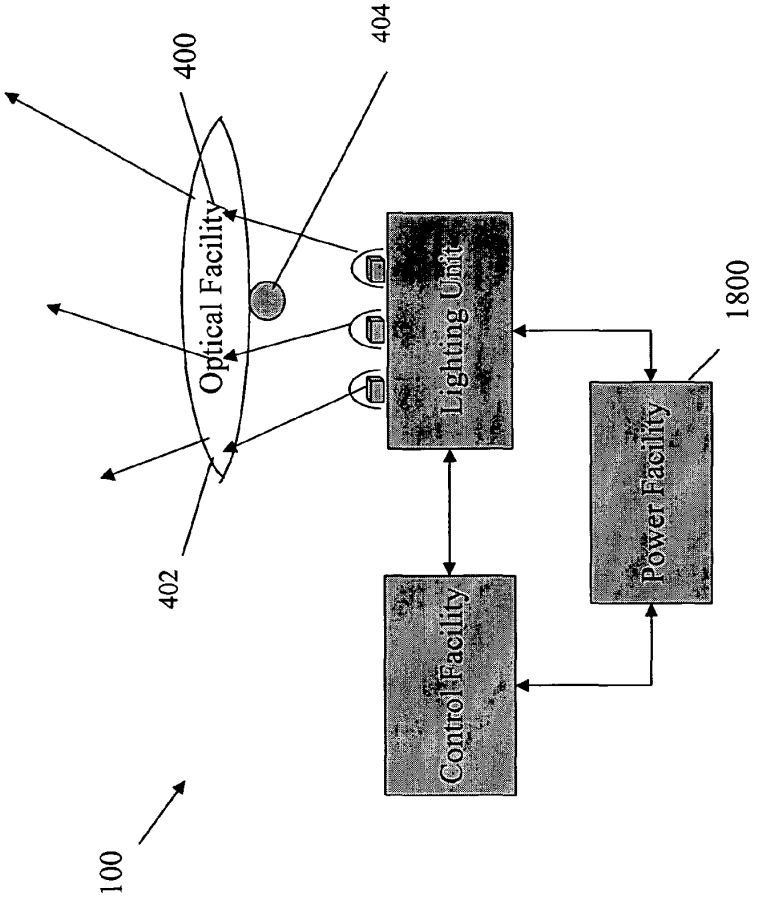
100
Control Facility
402
Optical Facility
400
Lighting Unit
404
Power Facility
1800

Fig. 4

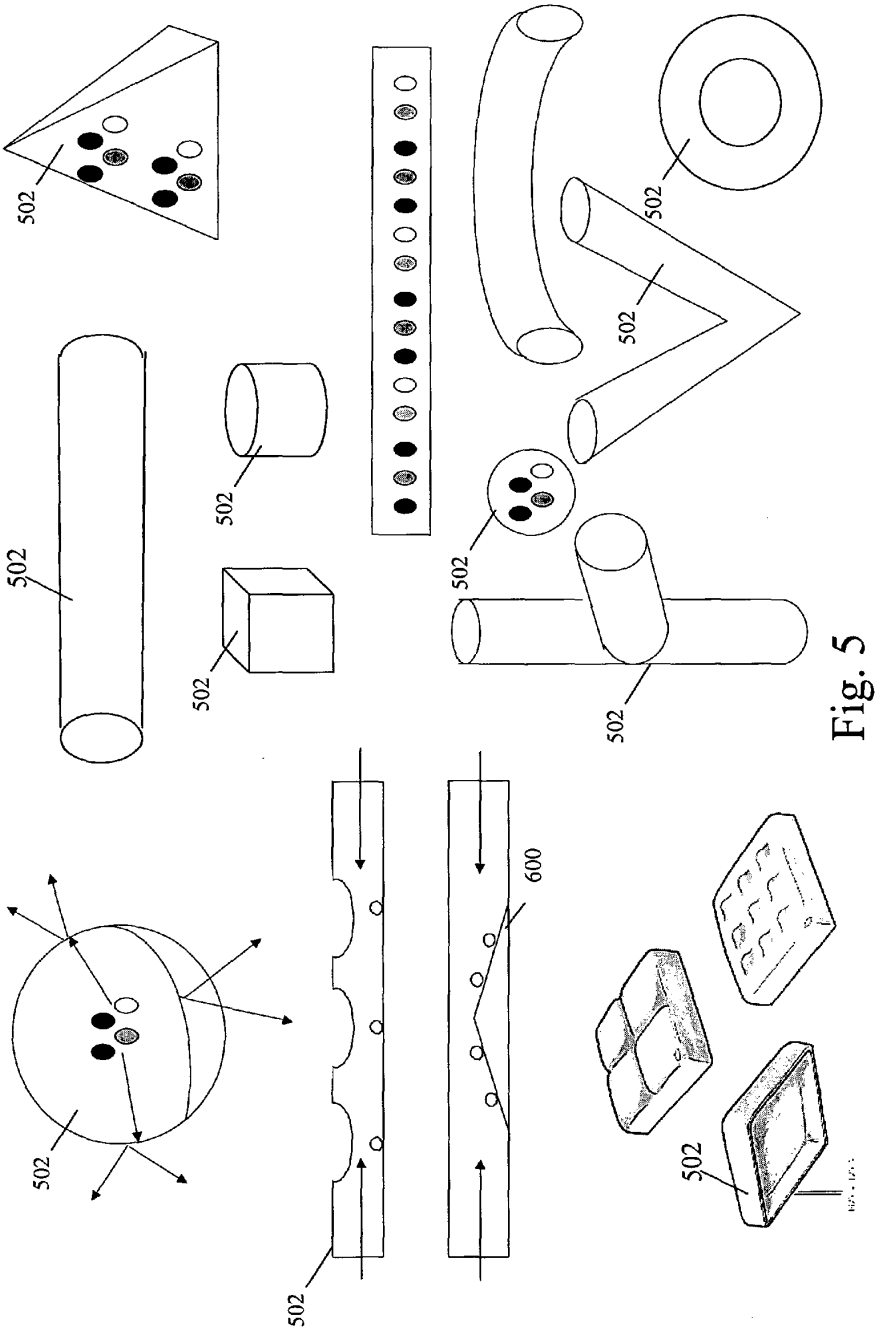

Fig. 5

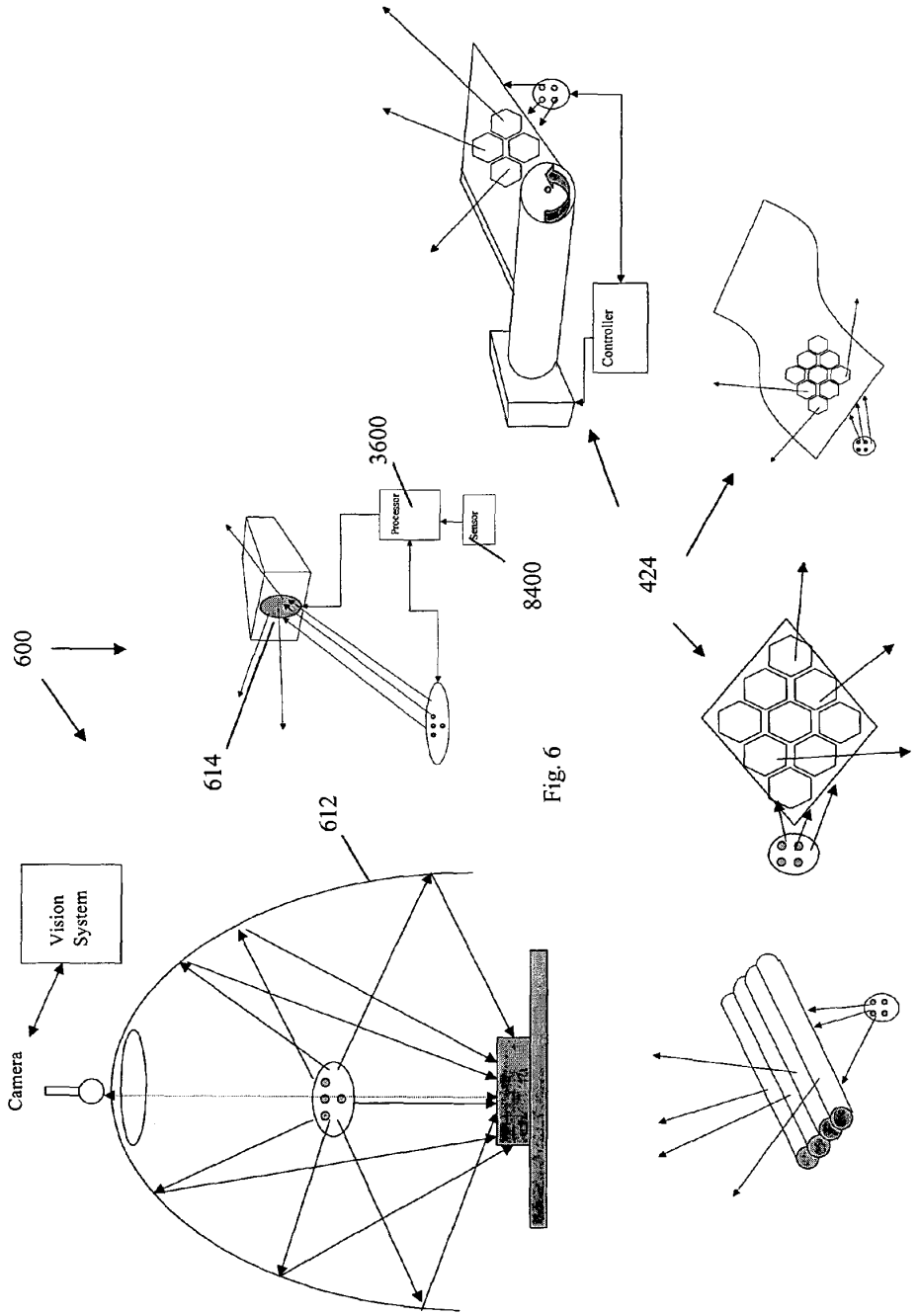
Camera
Vision System
600
612
614
3600
Processor
Sensor
8400
Controller
424

Fig. 6

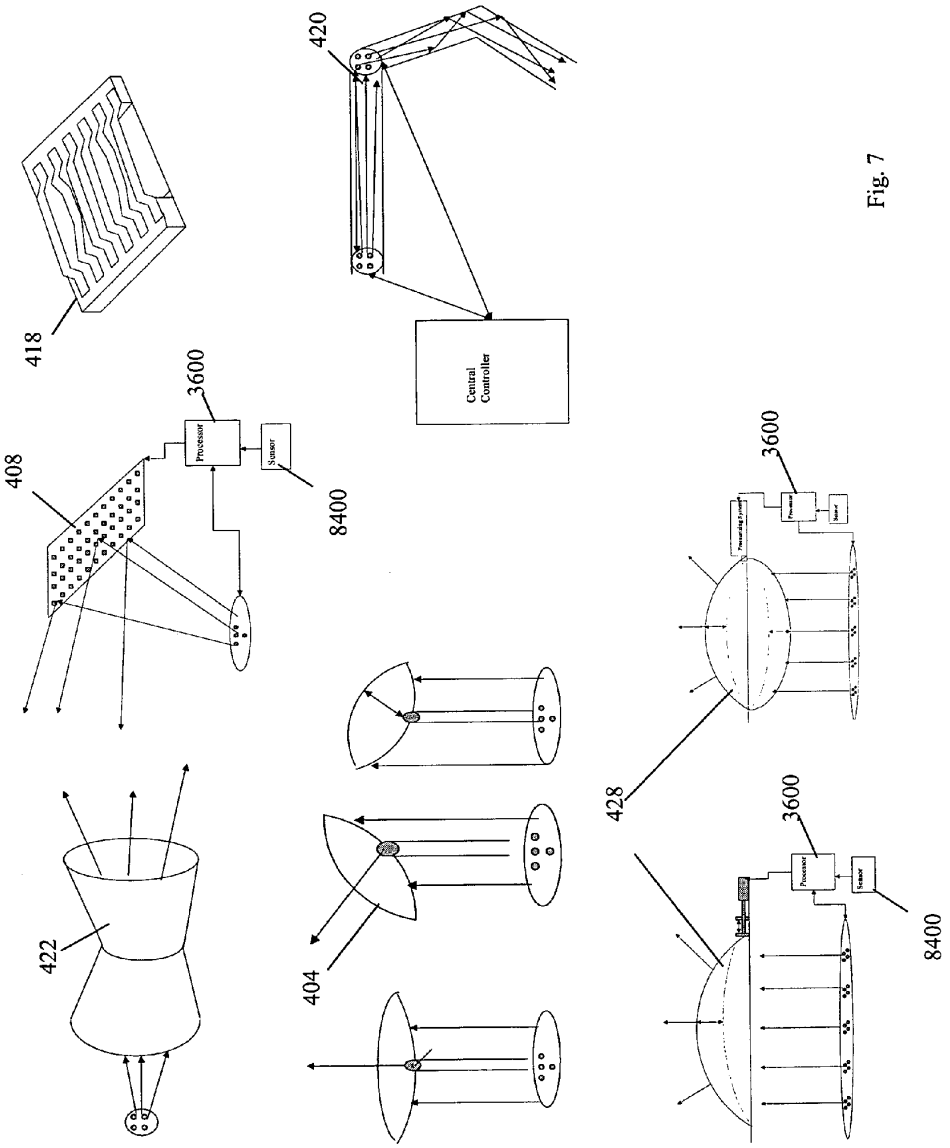
418
420
Central Controller
3600
Processor
Sensor
8400
408
422
404
428
3600
Processor
Sensor
3600
Processor
Sensor
8400

Fig. 7

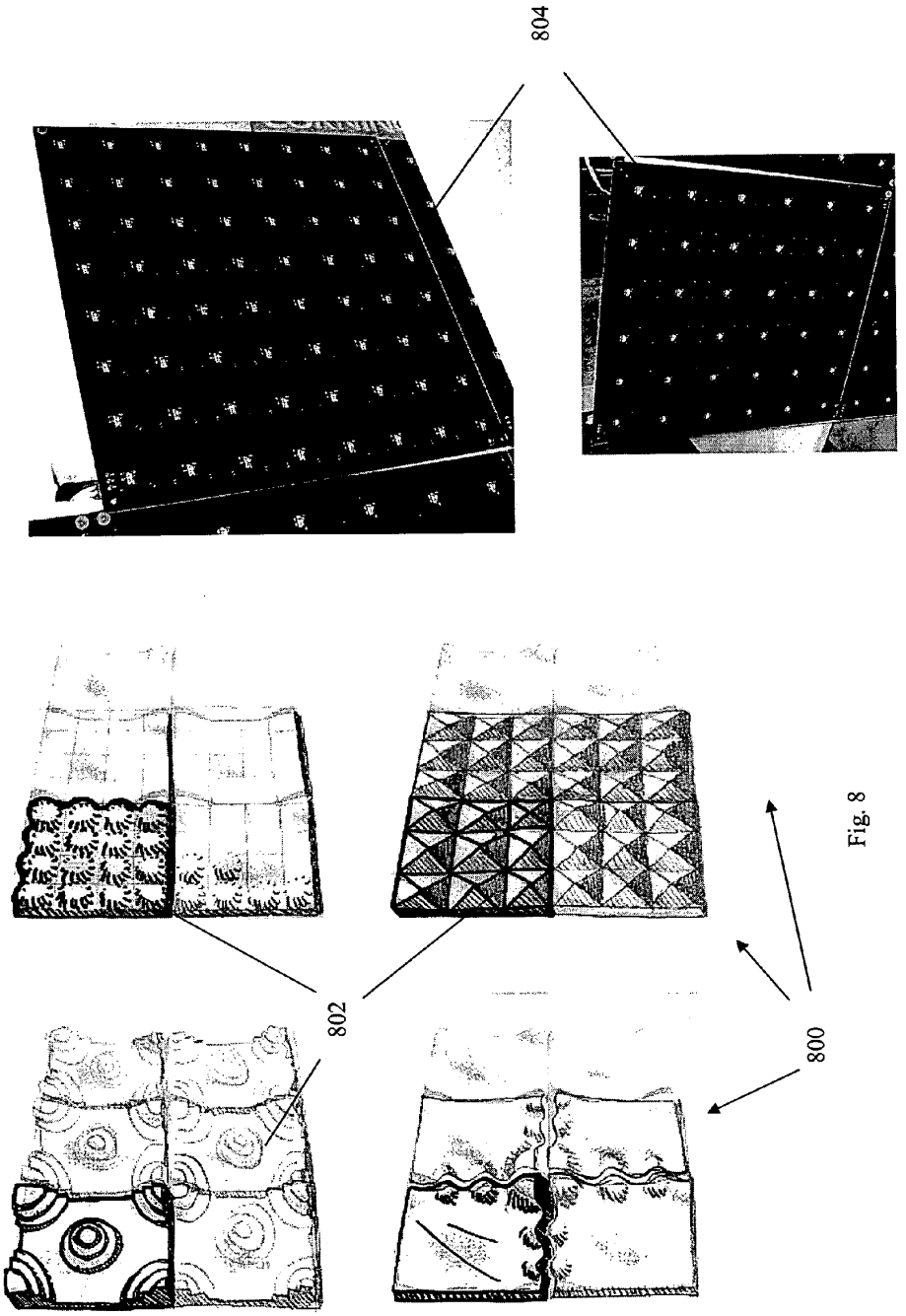

Fig. 8

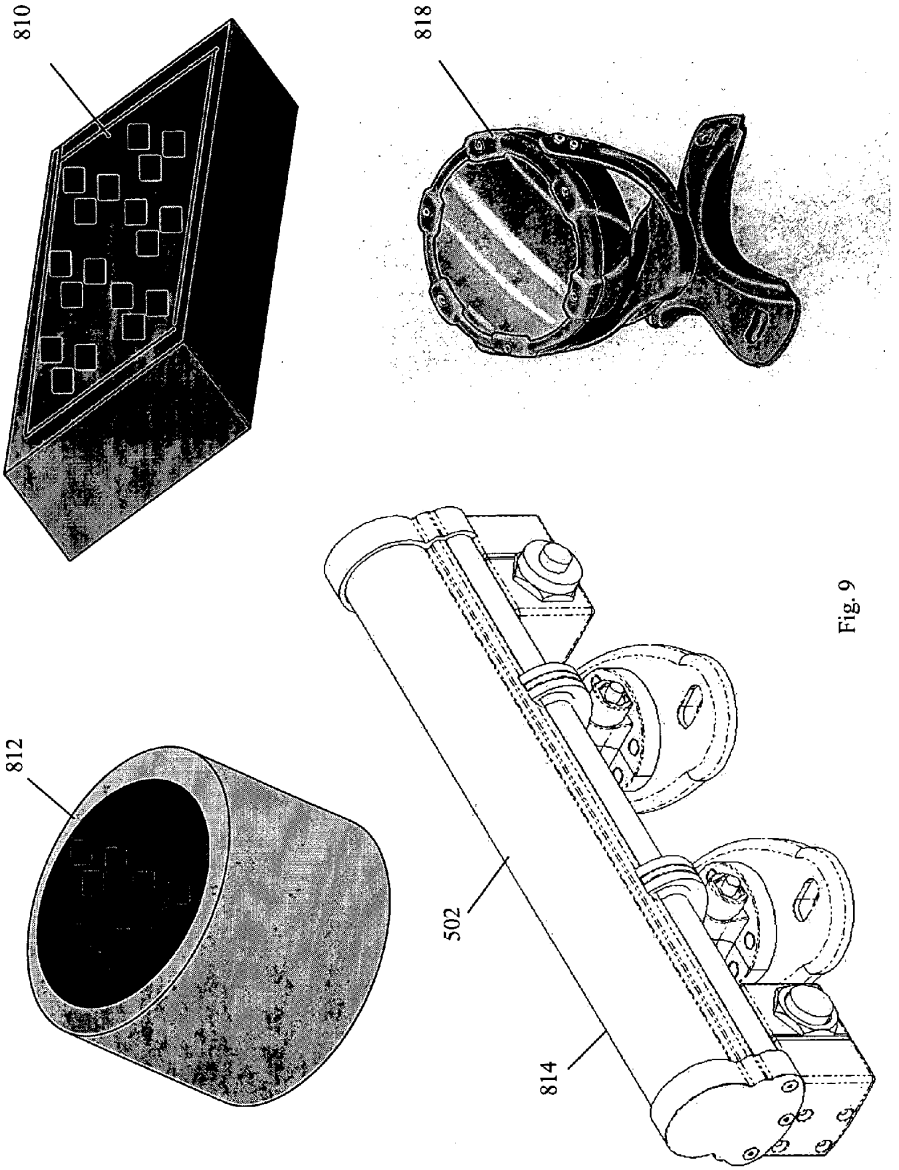

Fig. 9

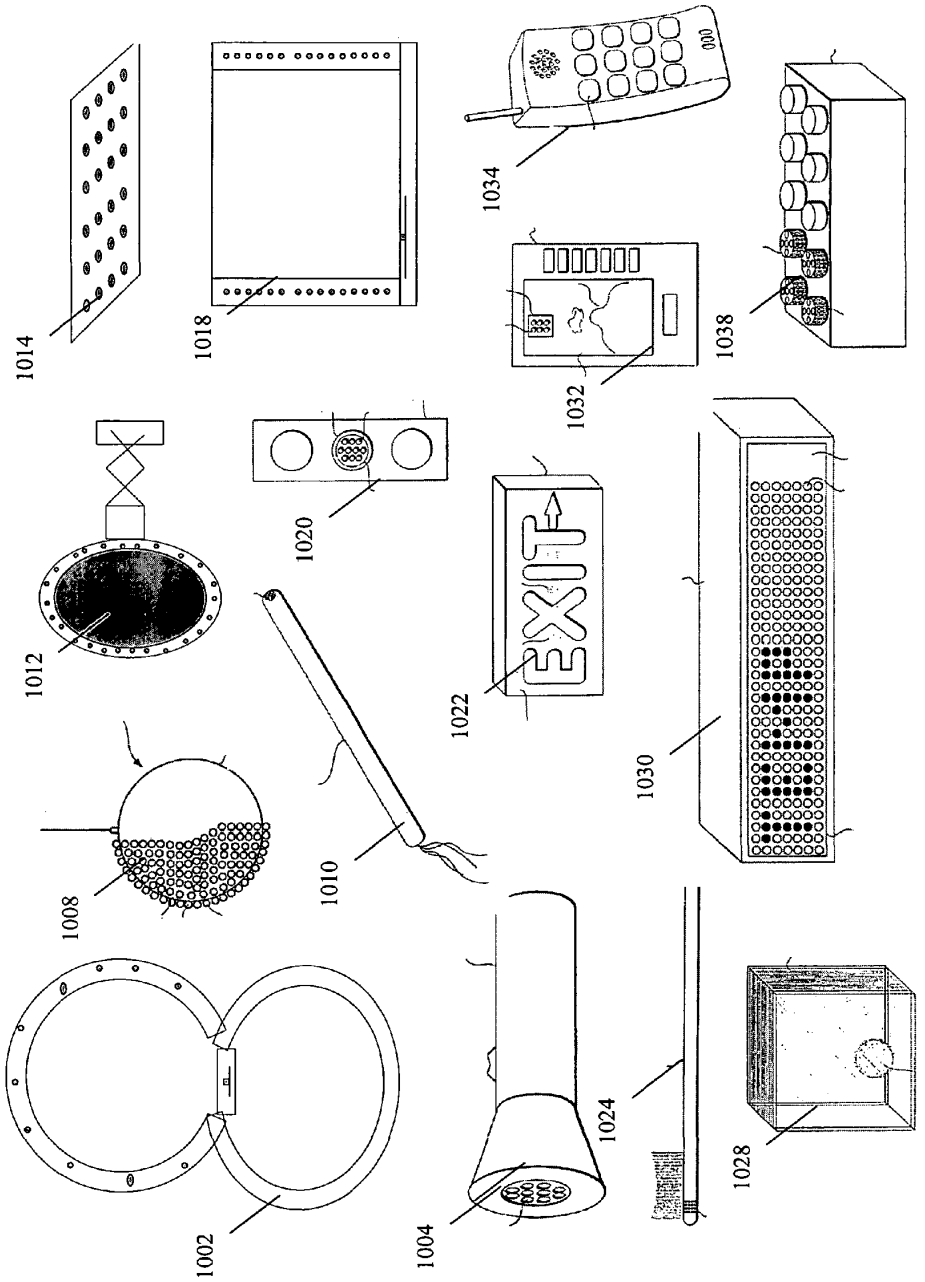
1014
1018
1034
1032
1038
1012
1020
1022
1030
1008
1010
1002
1004
1024
1028
EXIT

Fig. 10

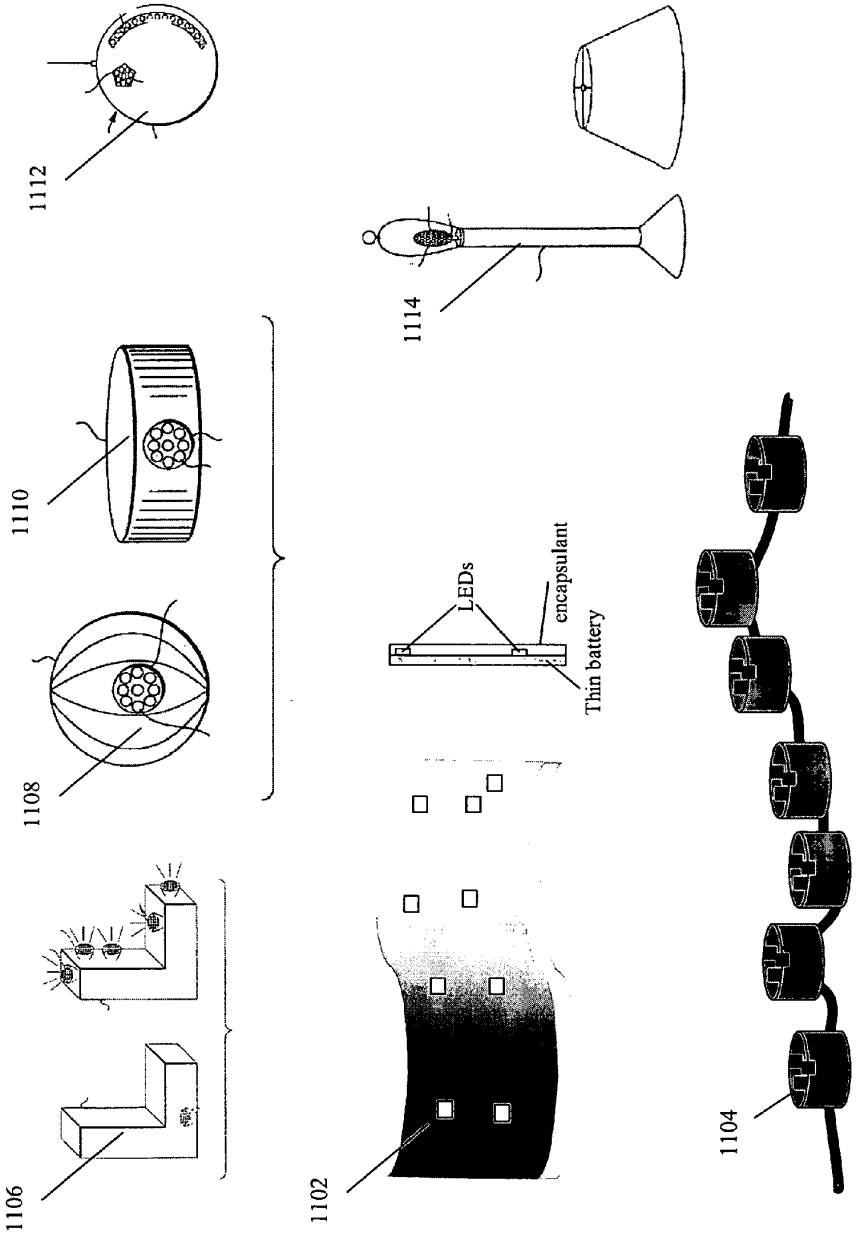
1112
1110
1108
1106
1114
LEDs
encapsulant
Thin battery
1102
1104

Fig. 11

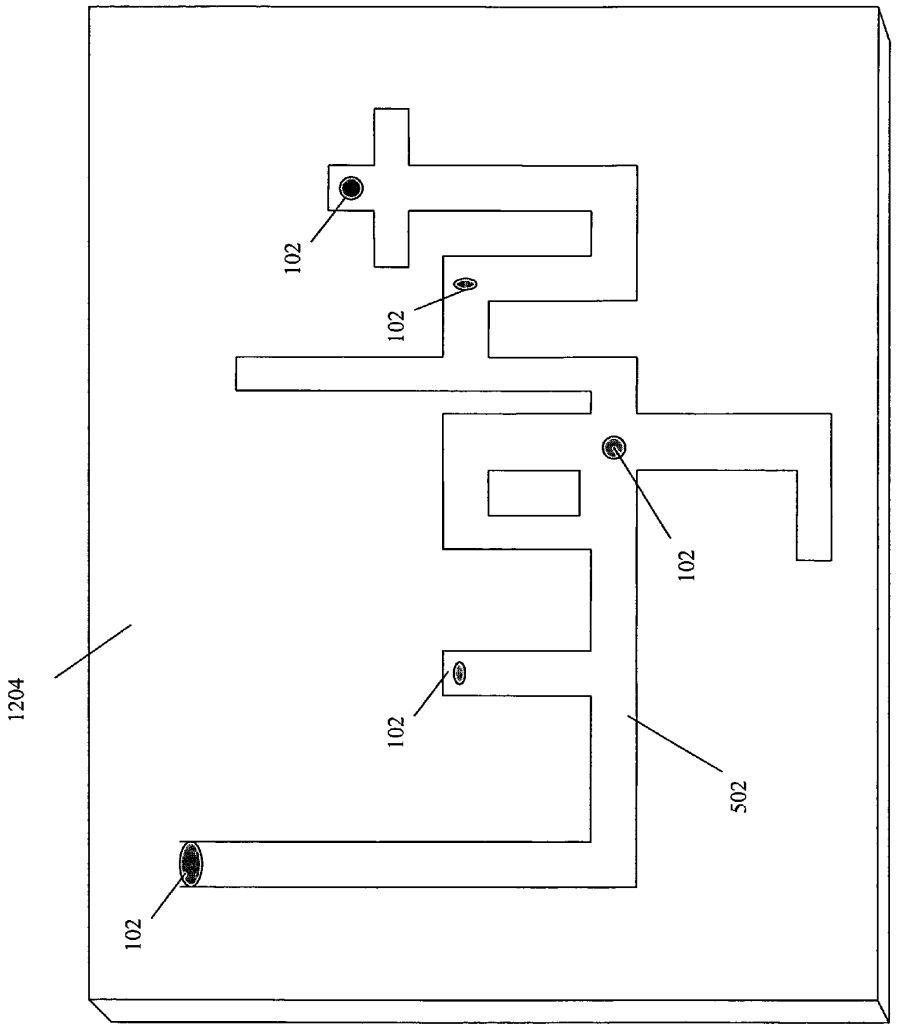

Fig. 12

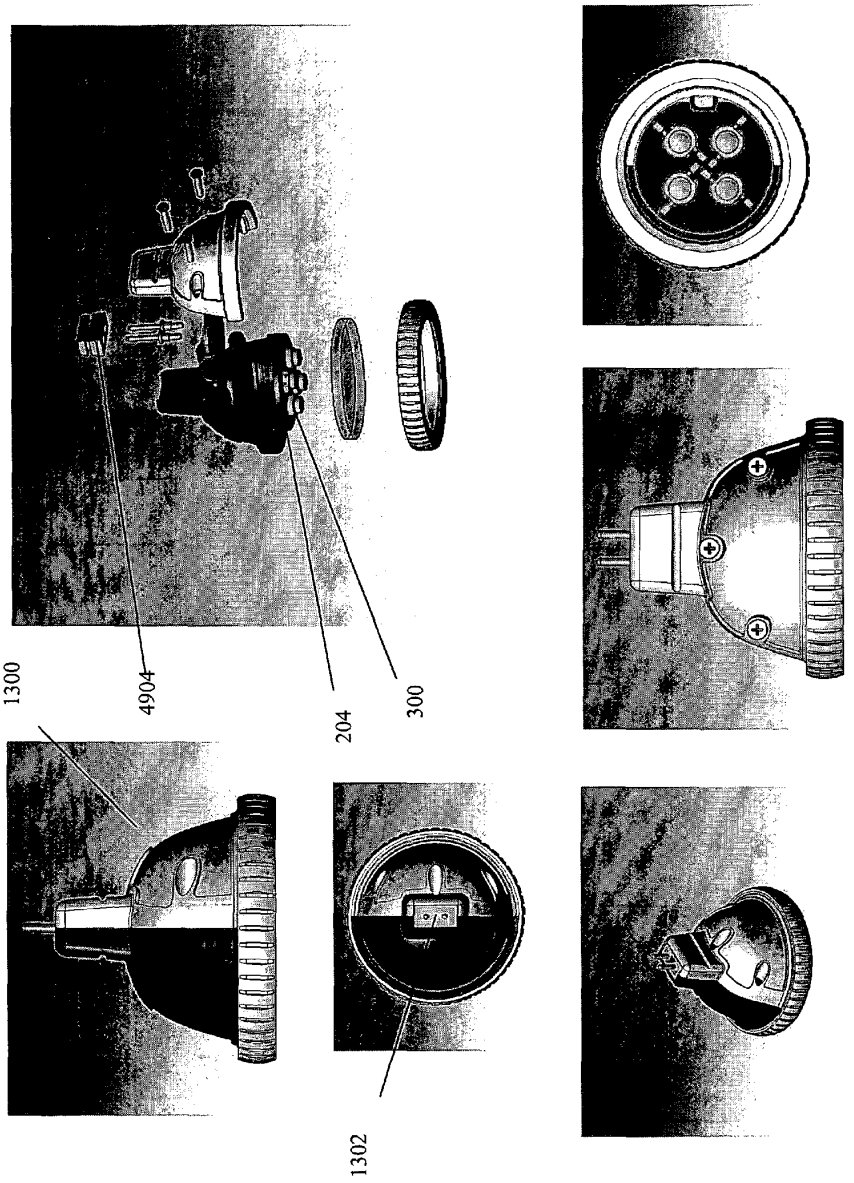

Fig. 13

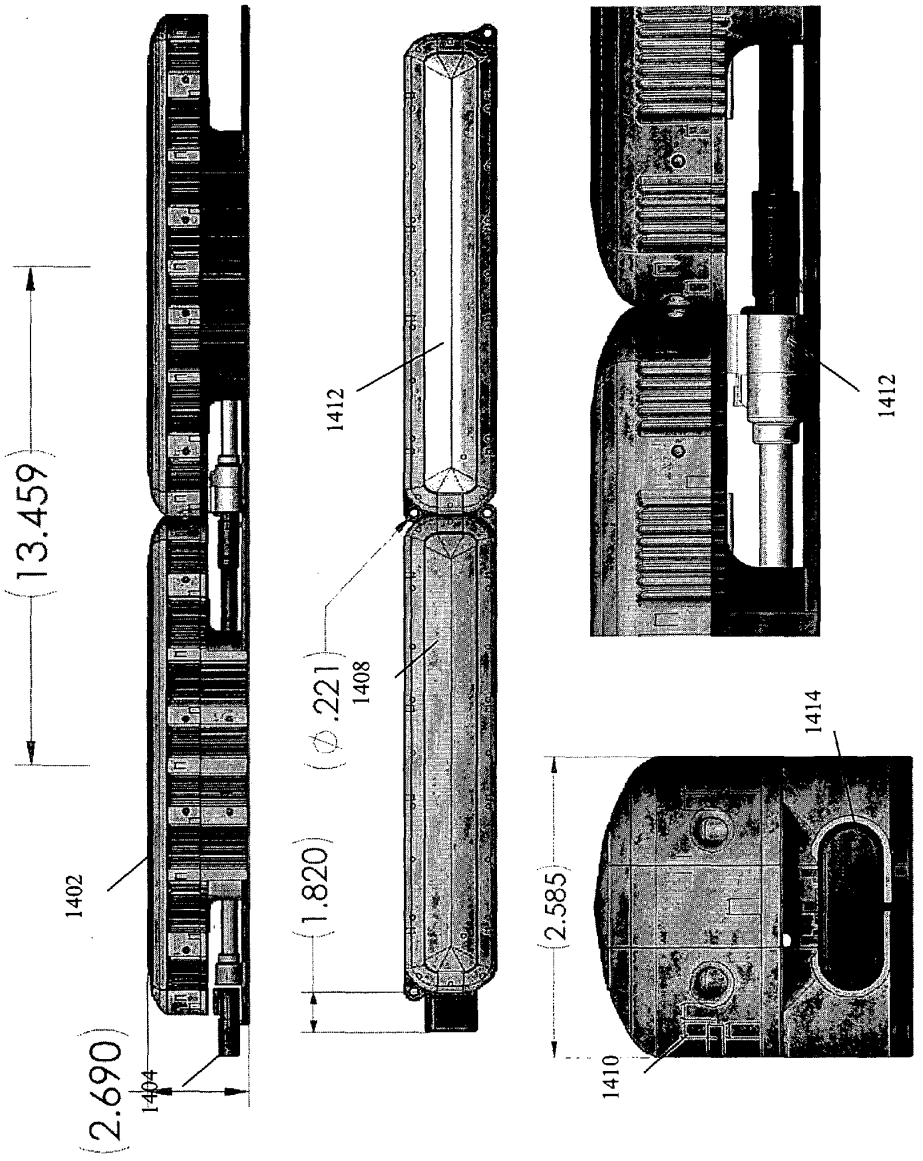

Fig. 14a

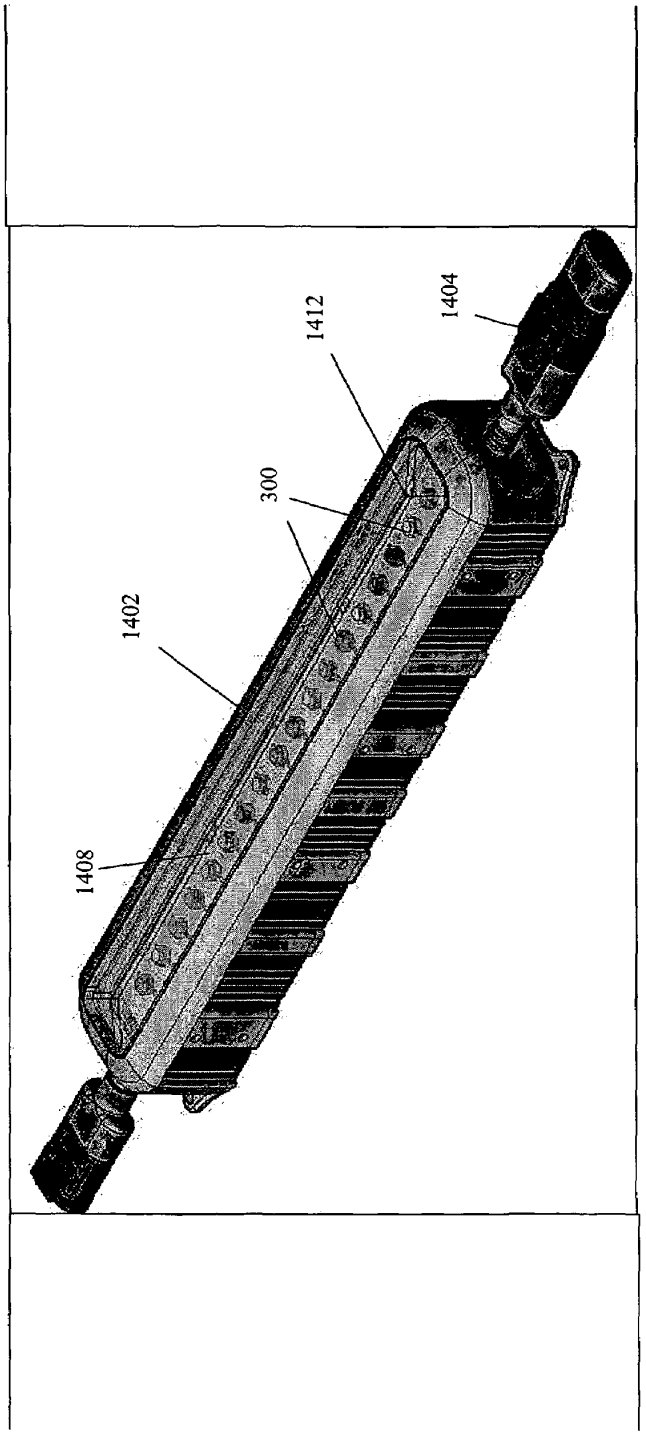

Fig. 14b

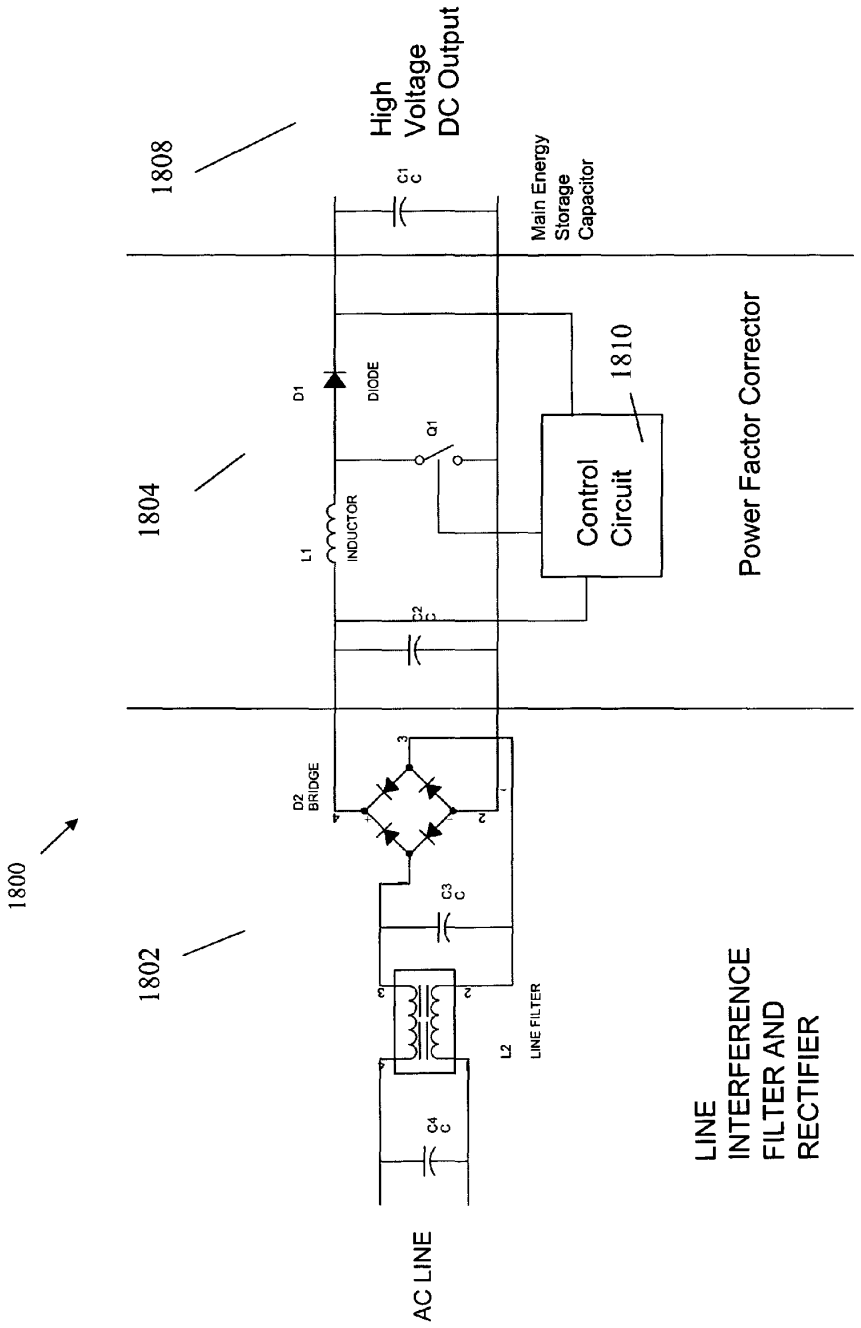
1800
1808
1804
1802
High Voltage DC Output
C1 C
Main Energy Storage Capacitor
D1
DIODE
Q1
L1
INDUCTOR
C2 C
1810
Control Circuit
Power Factor Corrector
D2 BRIDGE
C3 C
L2
LINE FILTER
C4 C
AC LINE
LINE INTERFERENCE FILTER AND RECTIFIER

Fig. 15

Fig. 16a

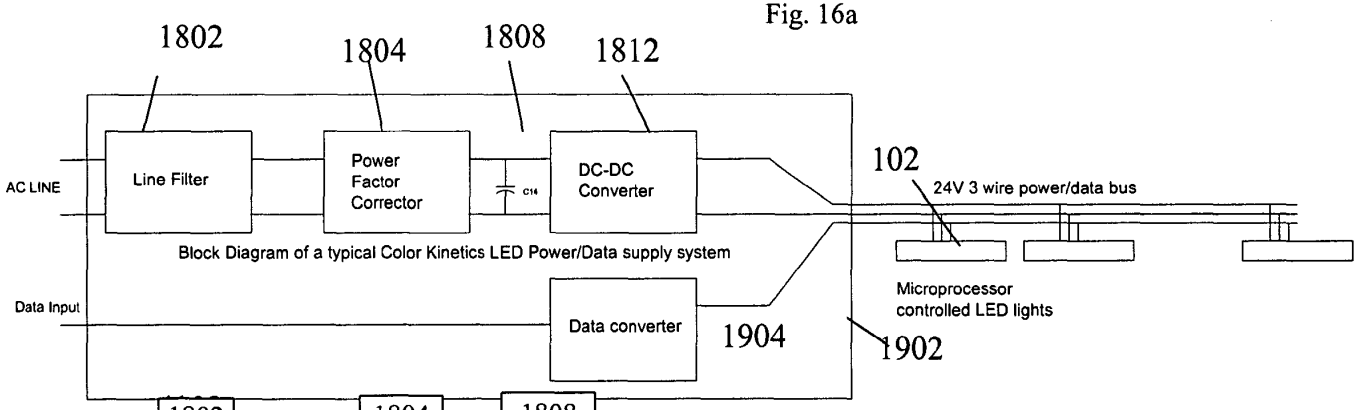

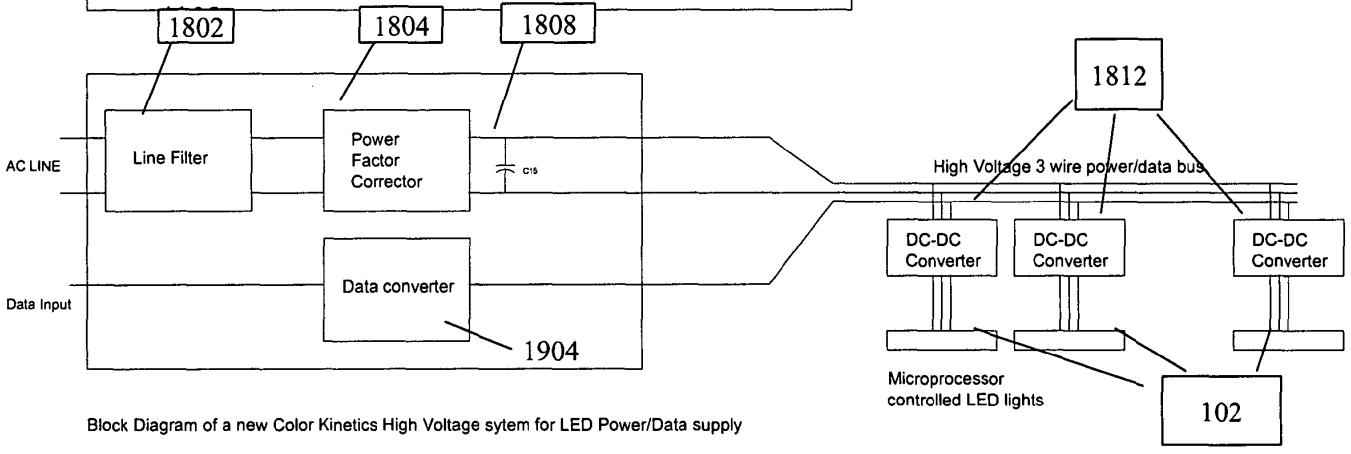

Fig. 16b

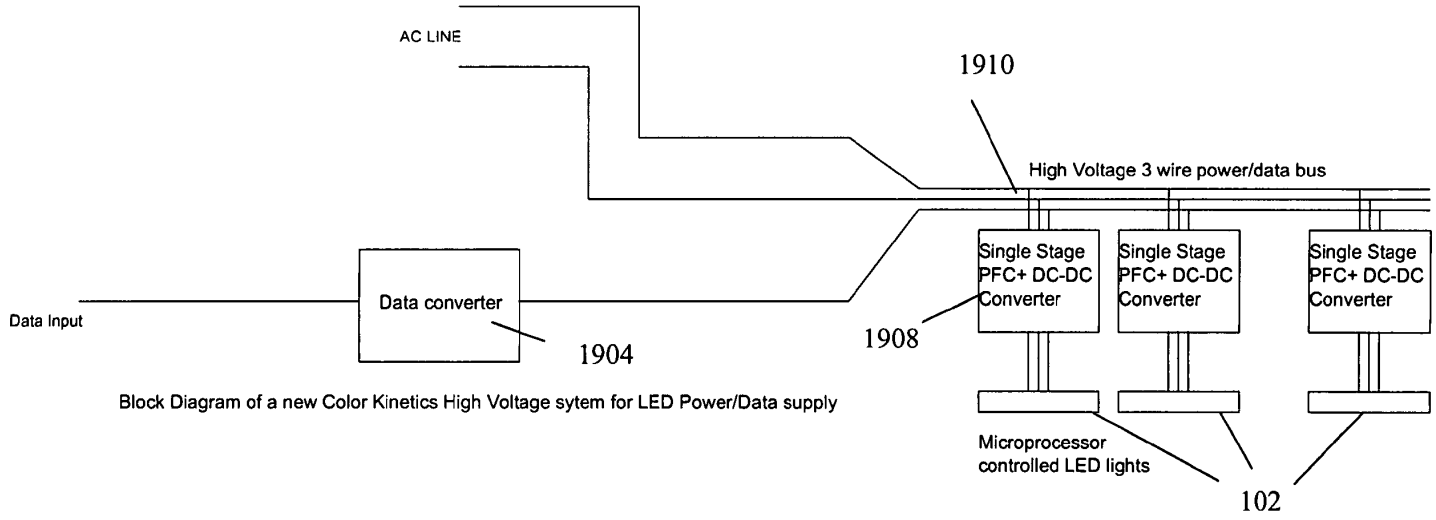

Block Diagram of a new Color Kinetics High Voltage sytem for LED Power/Data supply

Fig. 17

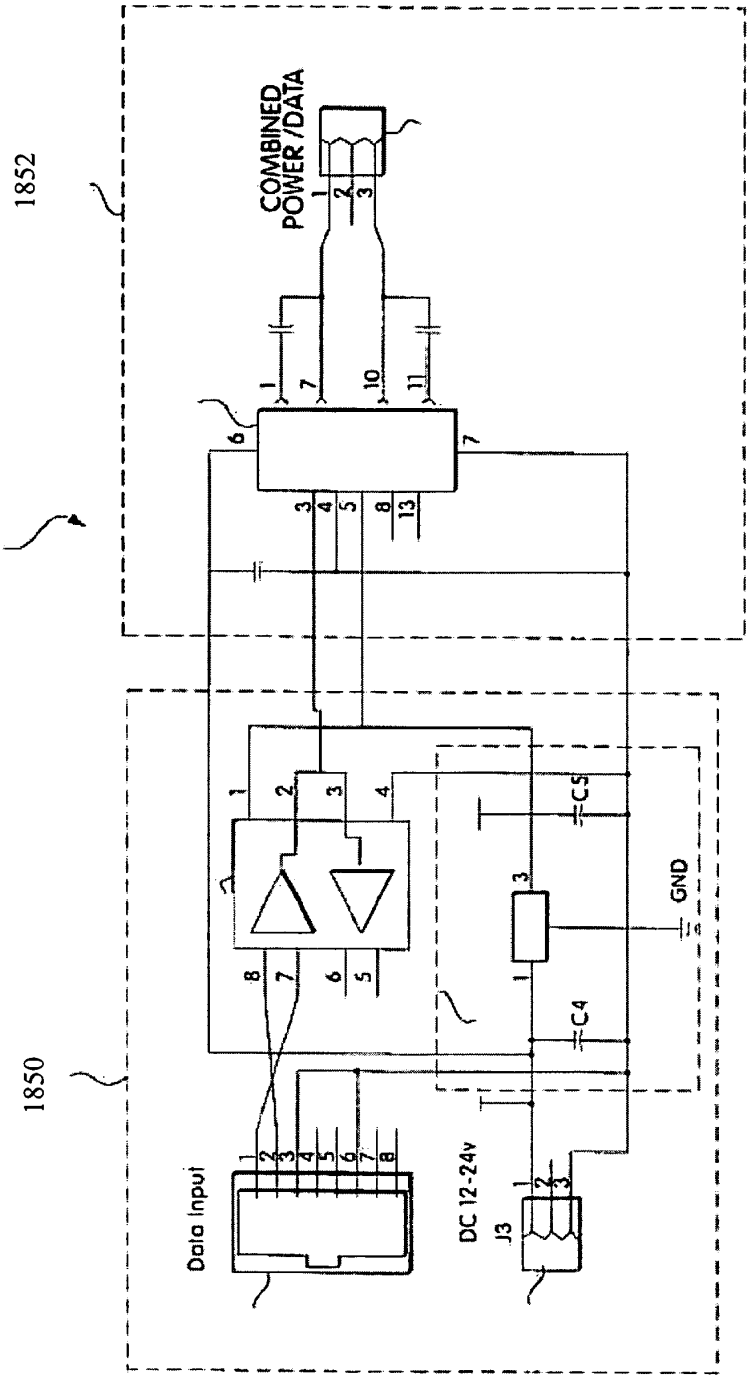
1852
COMBINED POWER /DATA
1850
Data Input
DC 12-24v
J3
C4
C5
GND

Fig. 18

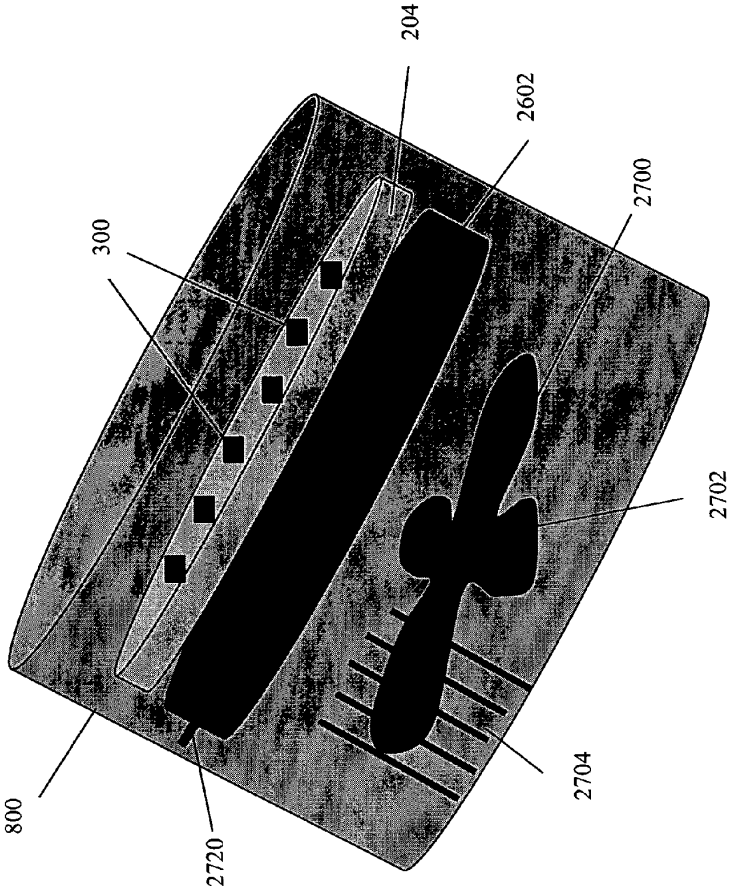

Fig. 19

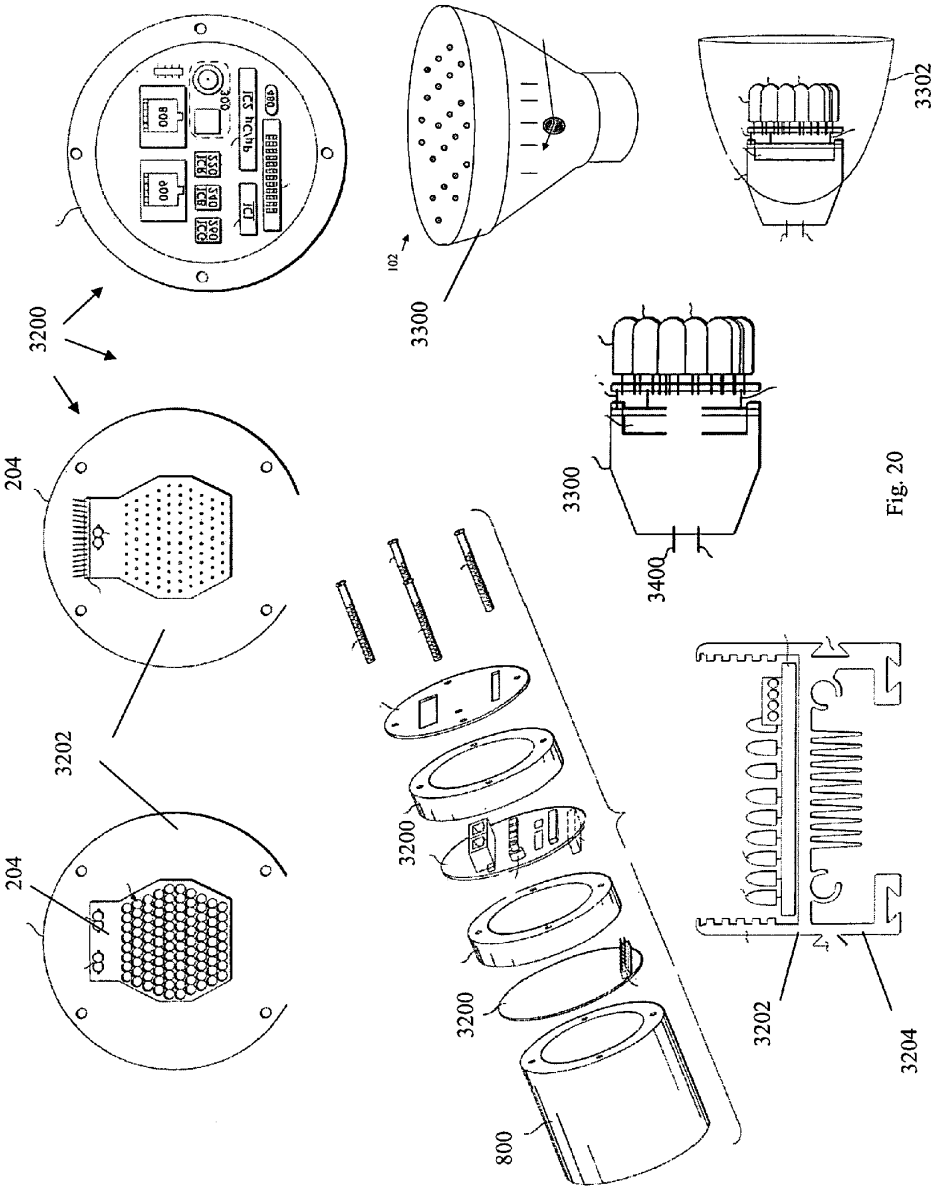
3200
204
3202
204
3300
102
3300
3400
3302
3200
3200
800
3202
3204

Fig. 20

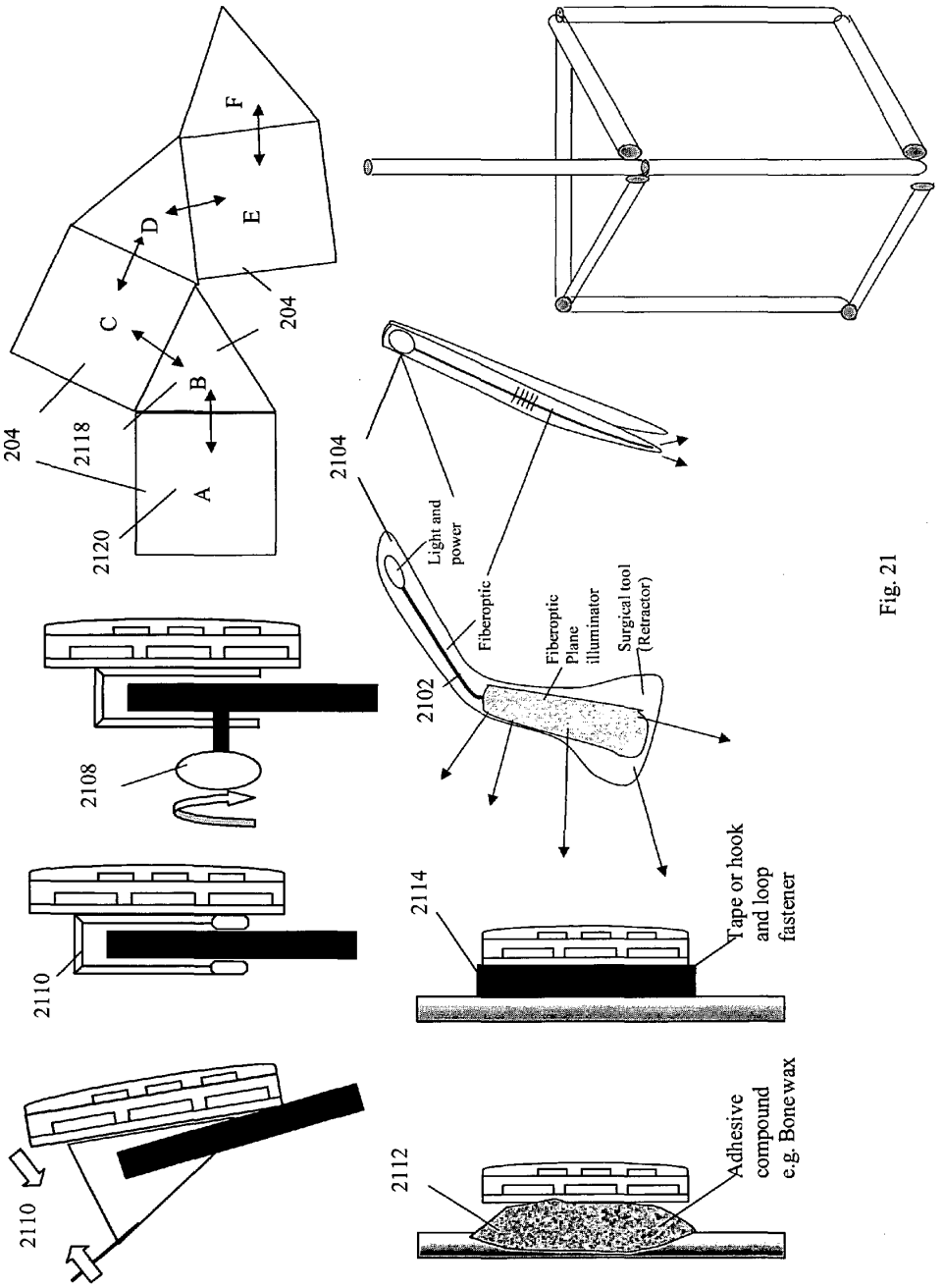
204
2118
2120
A
B
C
D
E
F
204
2108
2110
2110
2104
Light and power
Fiberoptic
2102
Fiberoptic Plane illuminator
Surgical tool (Retractor)
2114
Tape or hook and loop fastener
2112
Adhesive compound e.g. Bonewax

Fig. 21

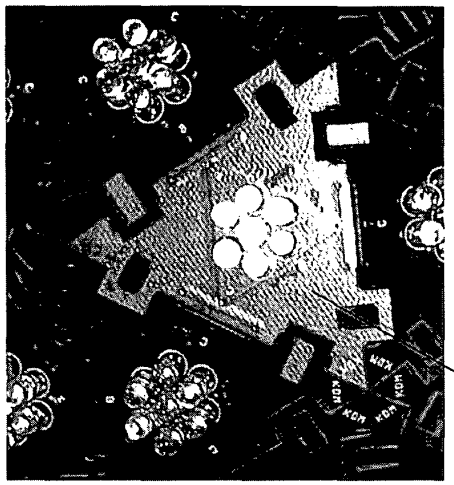

2118

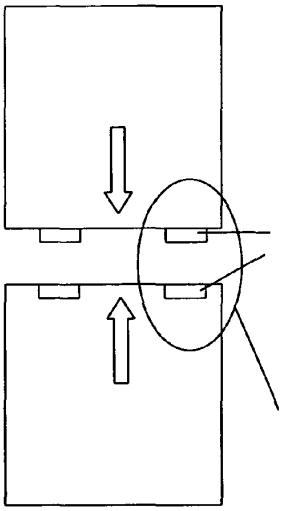

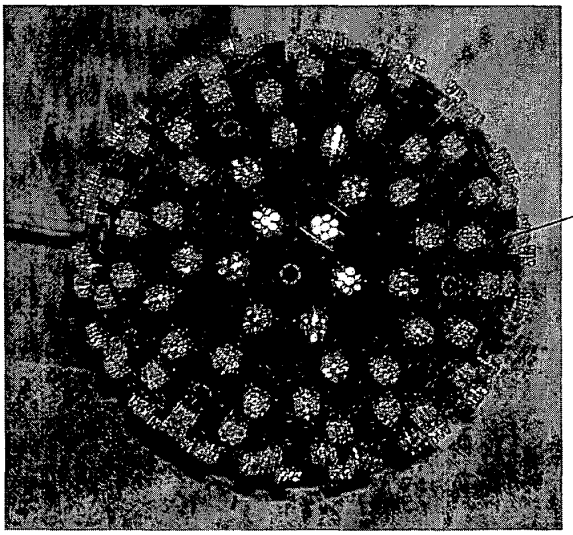

2204

Fig. 22

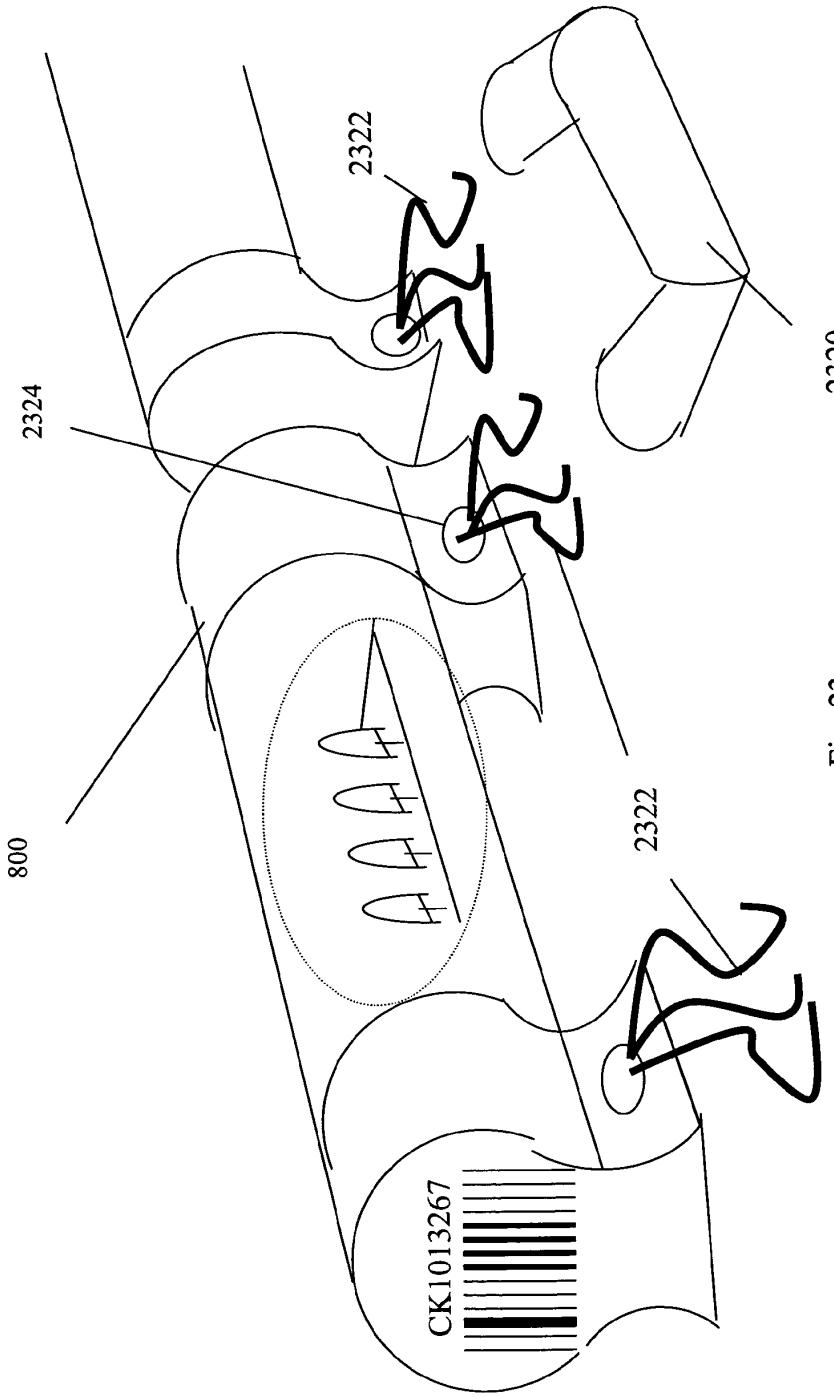

Fig. 23

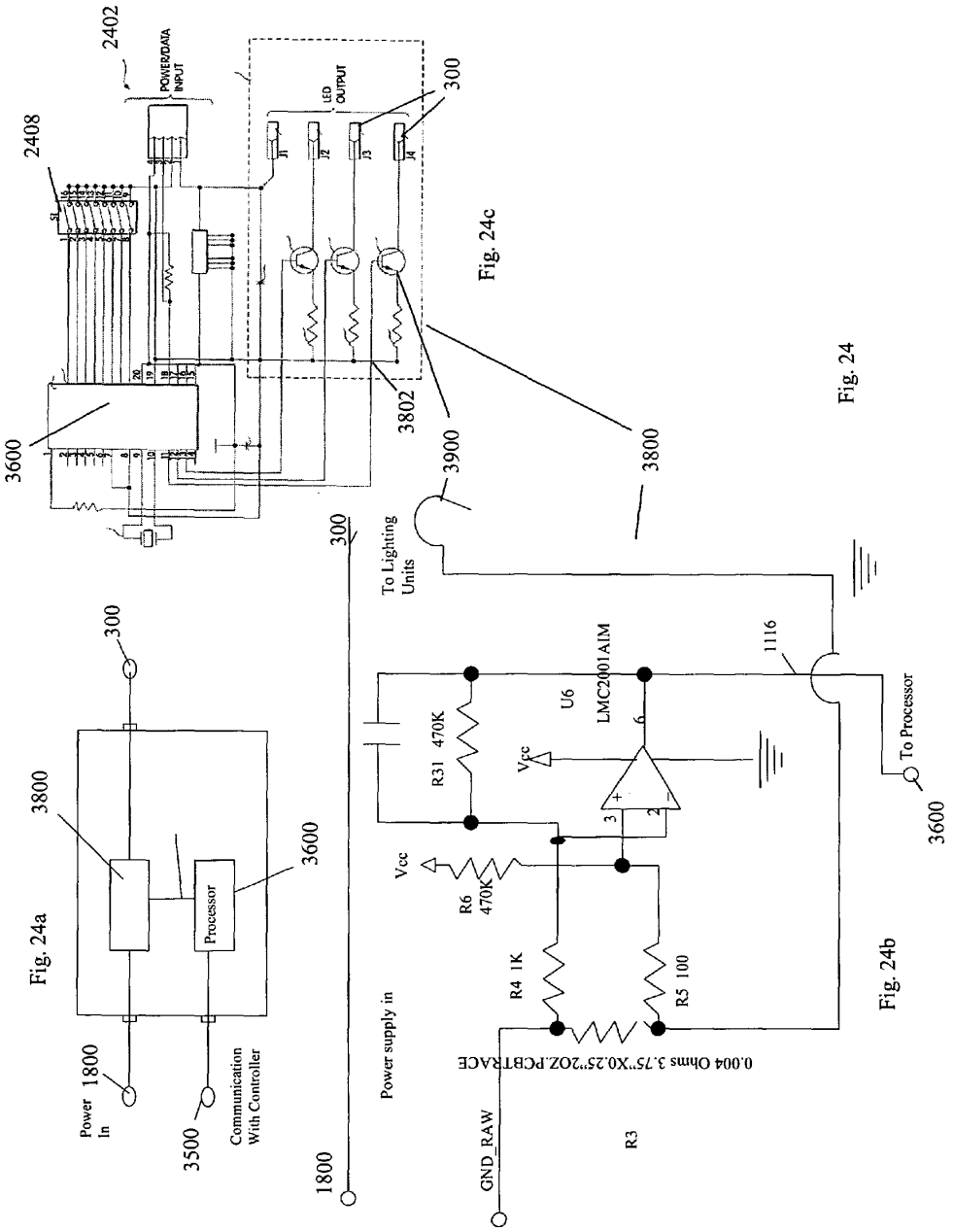
2402
POWER/DATA INPUT
2408
LED OUTPUT
300
3600
3802
3900
3800
To Lighting Units
Fig. 24c
Fig. 24
300
3800
3600
Processor
Fig. 24a
Power In
1800
3500
Communication With Controller
1800
Power supply in
R31 470K
U6
LMC2001AIM
Vcc
R6 470K
R4 1K
R5 100
0.004 Ohms 3.75"X0.25"2OZ.PCBTRACE
GND_RAW
R3
1116
To Processor
3600
Fig. 24b

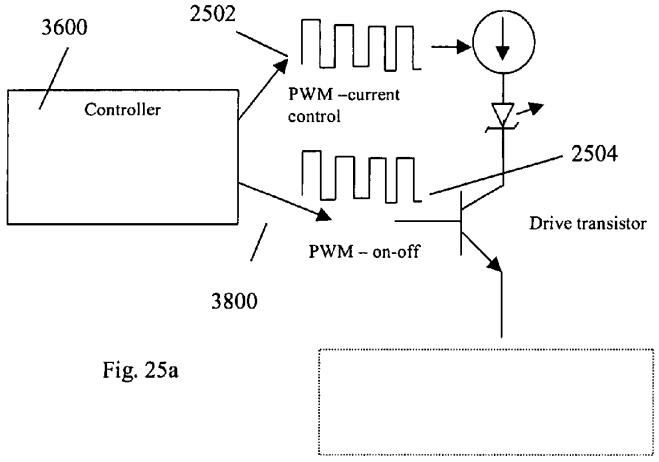

Fig. 25a

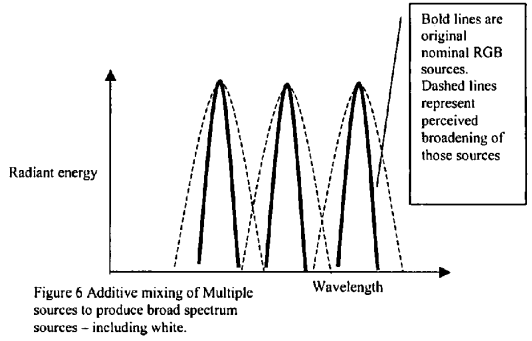

Fig. 25c

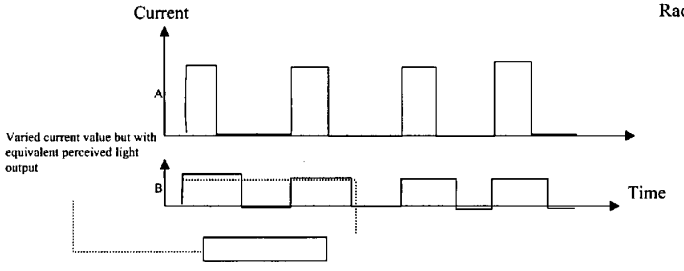

Fig. 25b

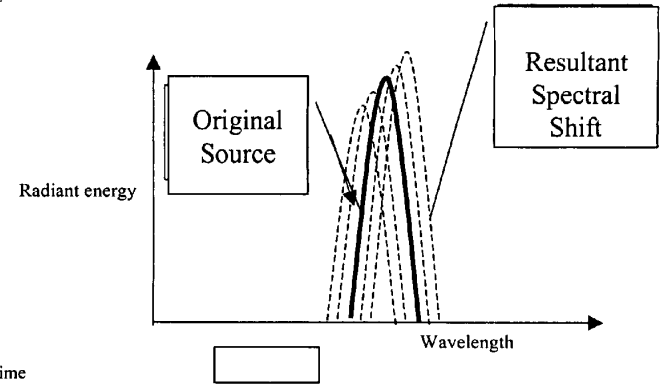

Fig. 25d

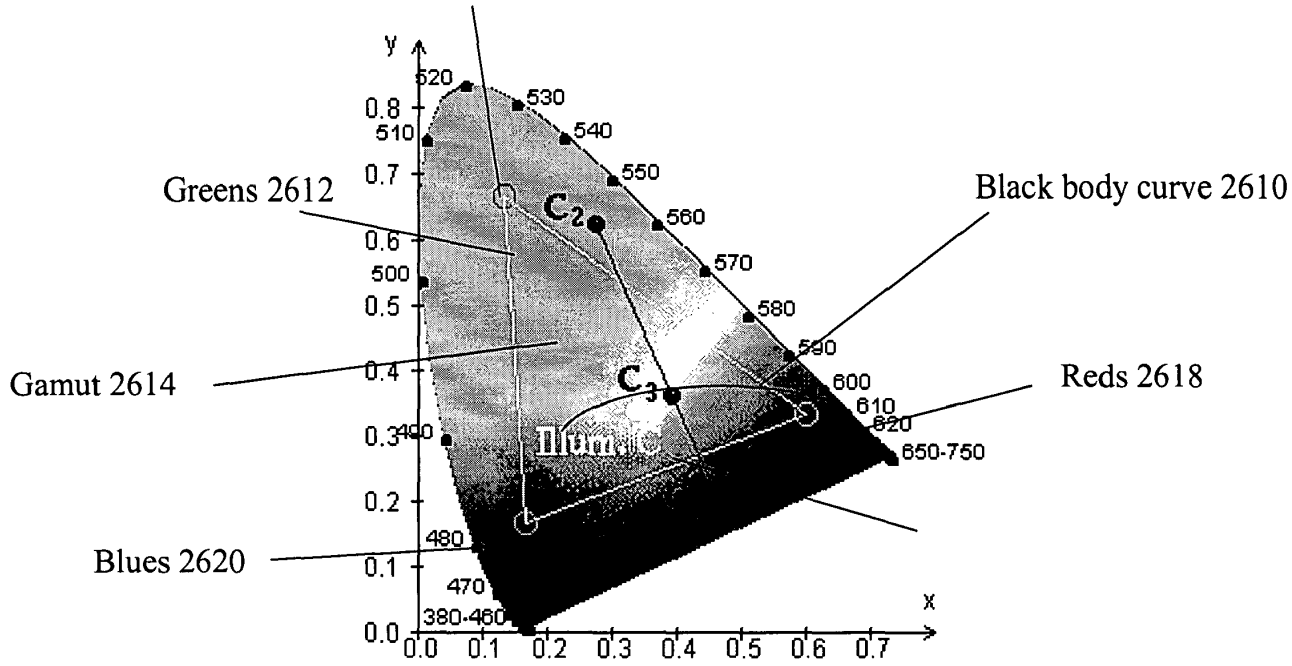
Greens 2612
Gamut 2614
Blues 2620
Black body curve 2610
Reds 2618
y
x
0.0
0.1
0.2
0.3
0.4
0.5
0.6
0.7
0.8
520
530
540
550
560
570
580
590
600
610
620
650-750
510
500
490
480
470
380-460
C2
C3
Illum. C

Fig. 26

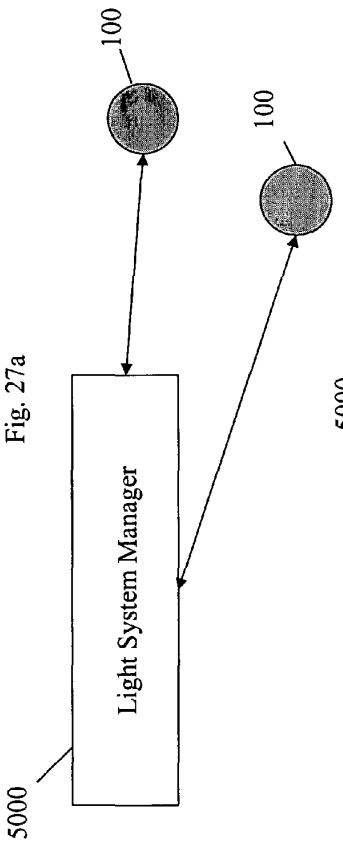

Fig. 27a

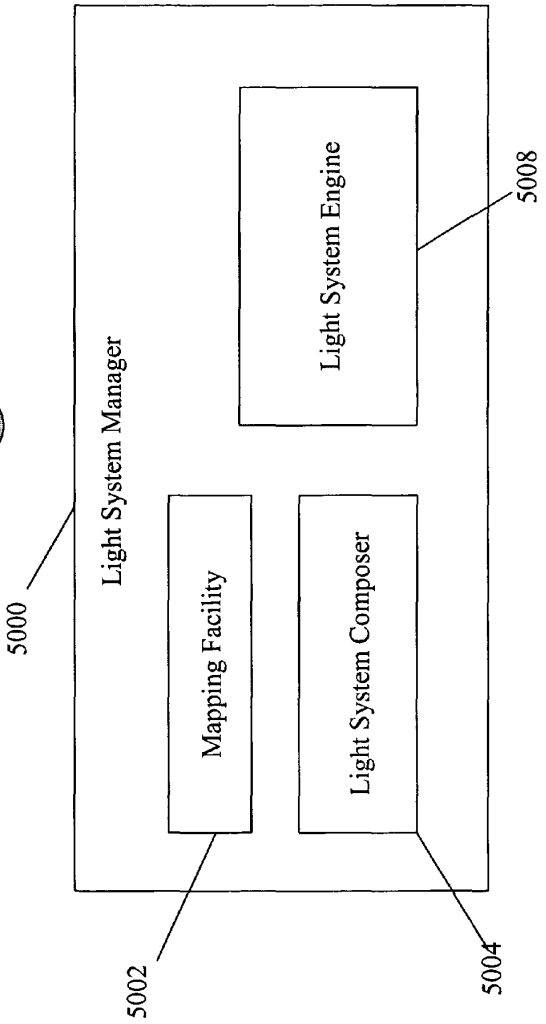

Fig. 27b

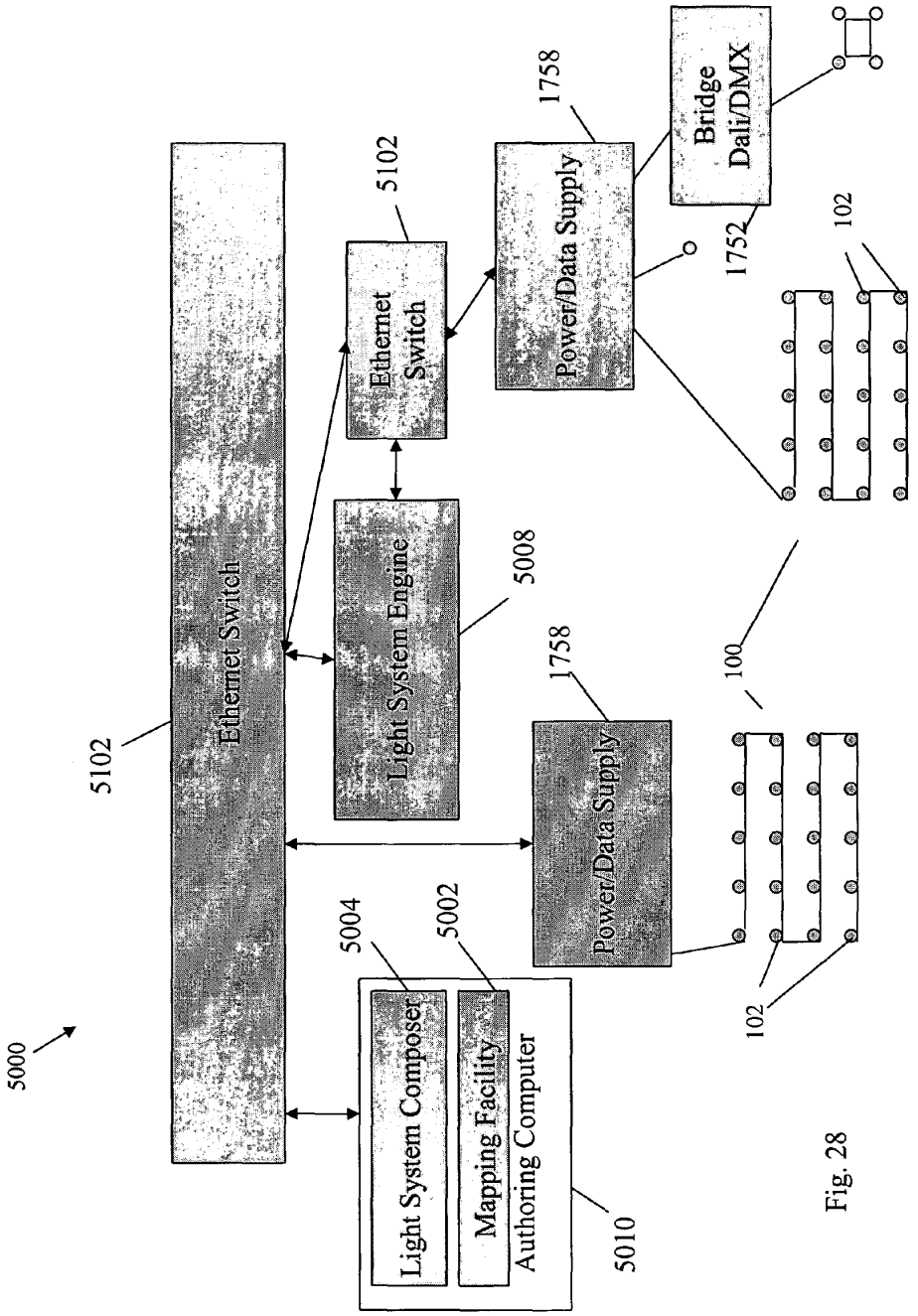
5000
5102
Ethernet Switch
5102
Ethernet Switch
Light System Engine
5008
1758
Power/Data Supply
1758
Power/Data Supply
Bridge
Dali/DMX
1752
5004
Light System Composer
5002
Mapping Facility
Authoring Computer
5010
100
102
102

Fig. 28

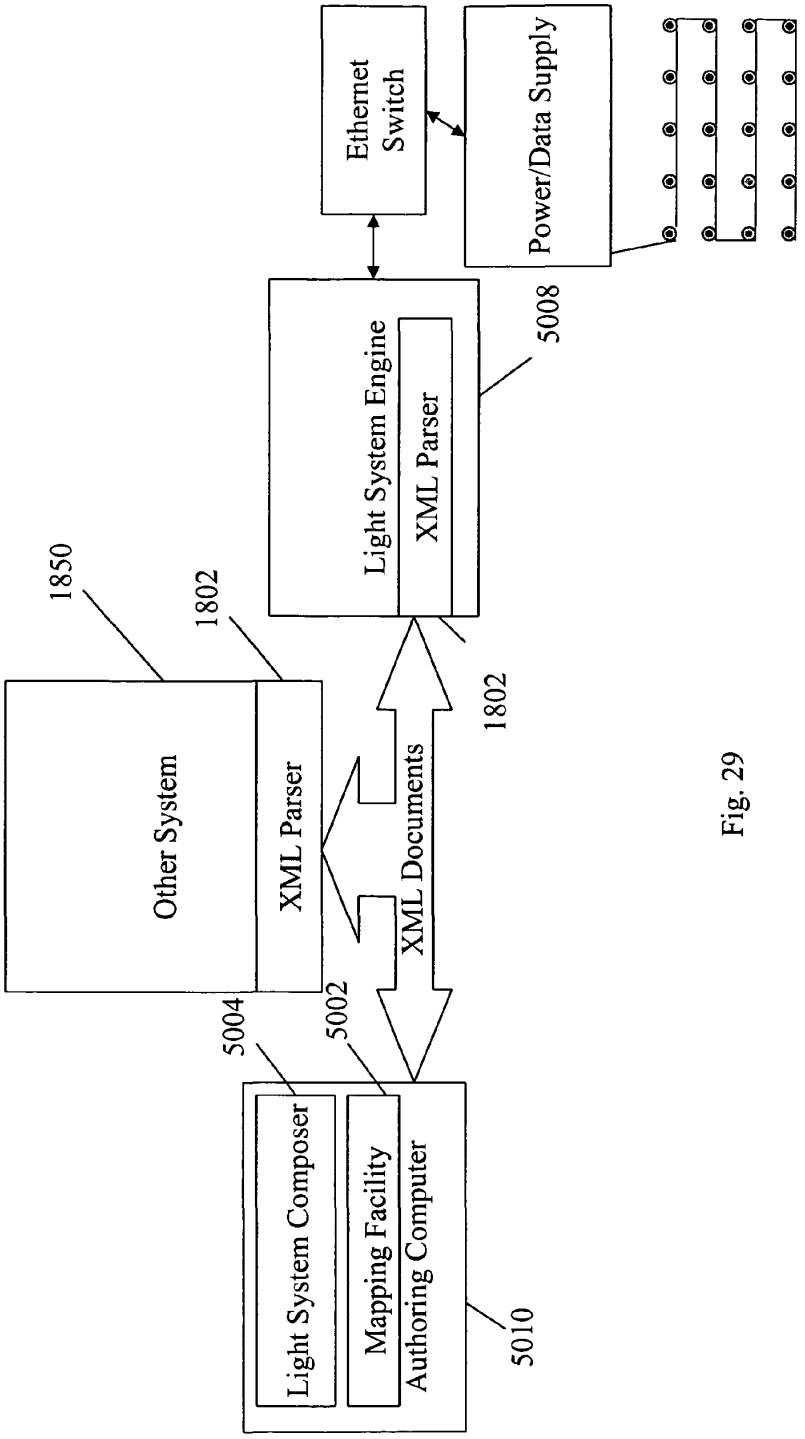
Other System
XML Parser
1850
1802
Light System Composer
Mapping Facility
Authoring Computer
5004
5002
5010
XML Documents
1802
Light System Engine
XML Parser
5008
Ethernet Switch
Power/Data Supply

Fig. 29

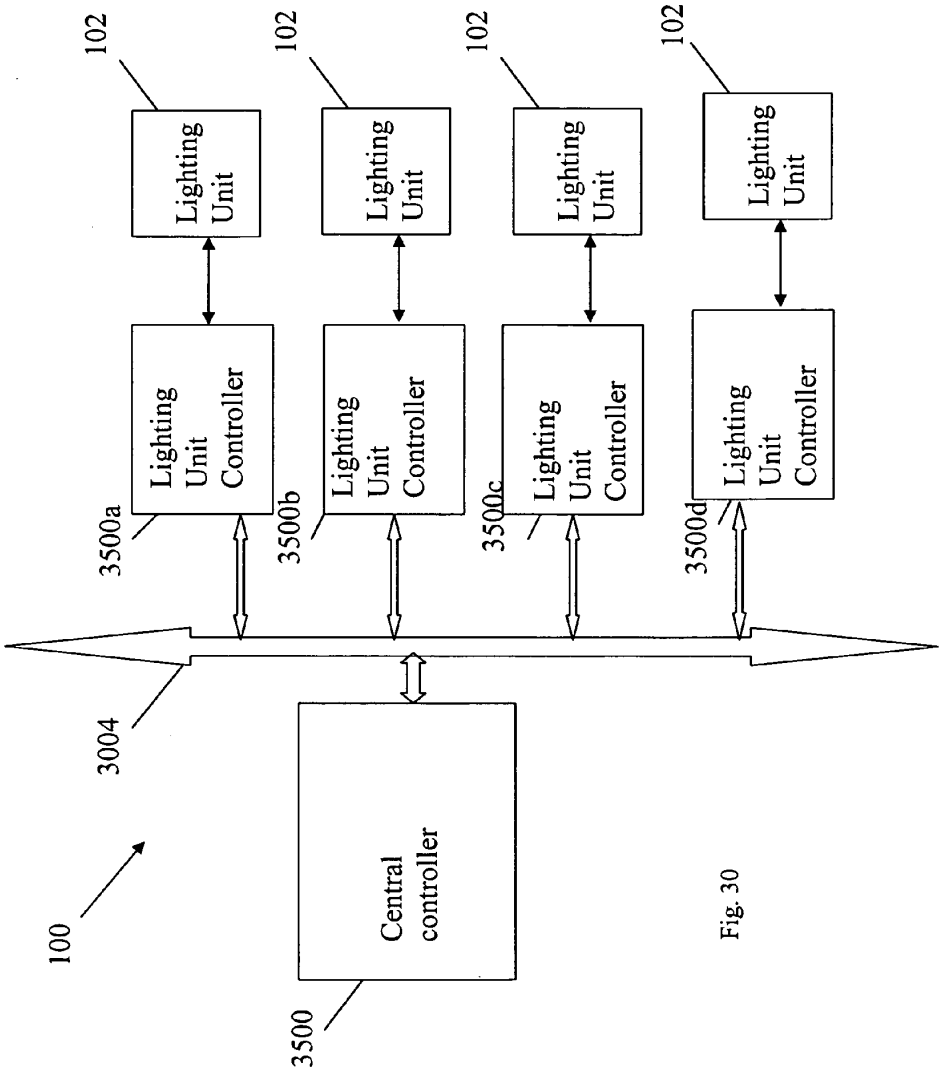
100
3004
3500
Central controller
3500a
3500b
3500c
3500d
Lighting Unit Controller
Lighting Unit Controller
Lighting Unit Controller
Lighting Unit Controller
102
102
102
102
Lighting Unit
Lighting Unit
Lighting Unit
Lighting Unit

Fig. 30

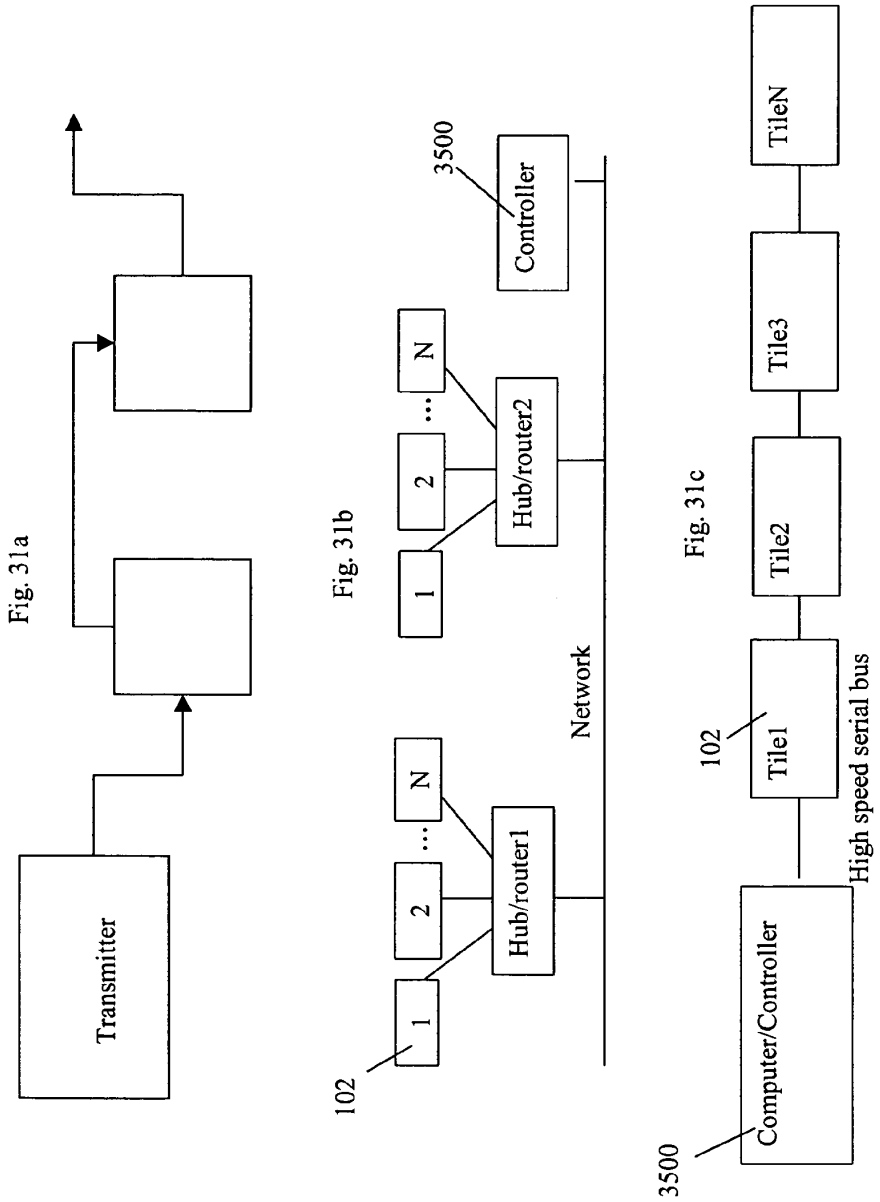
Transmitter
Fig. 31a
102
1
2
...
N
Hub/router1
Network
Hub/router2
1
2
...
N
3500
Controller
Fig. 31b
3500
Computer/Controller
High speed serial bus
102
Tile1
Tile2
Tile3
TileN
Fig. 31c

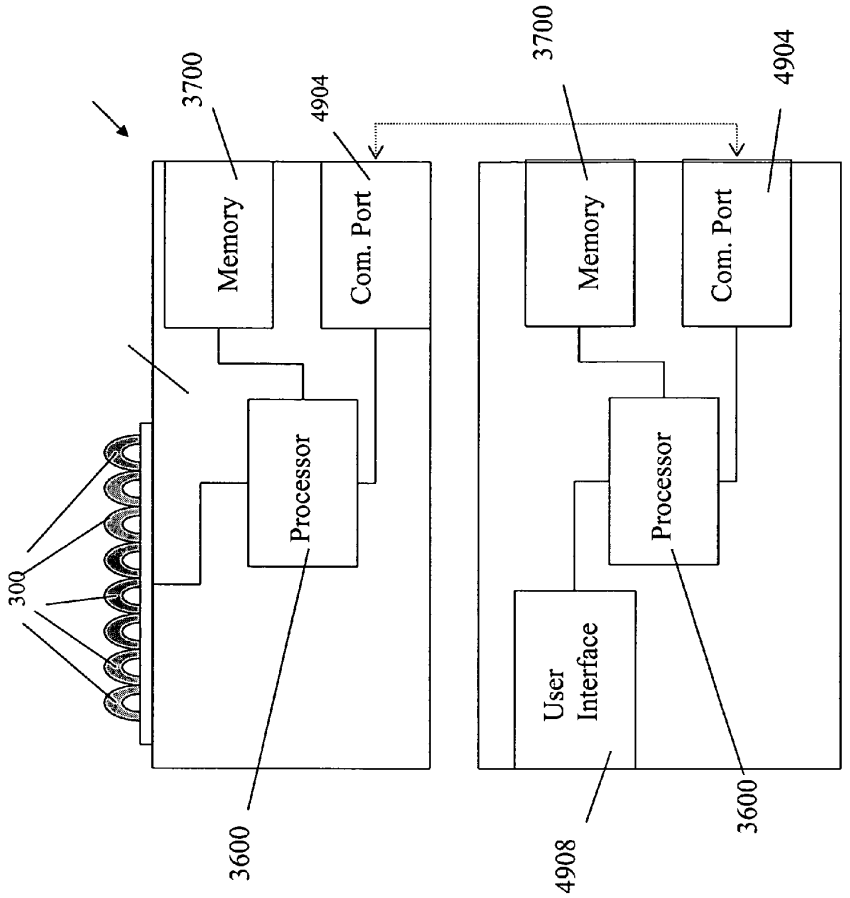
300
3700
Memory
Processor
3600
4904
Com. Port
3700
Memory
User Interface
4908
Processor
3600
4904
Com. Port

Fig. 32

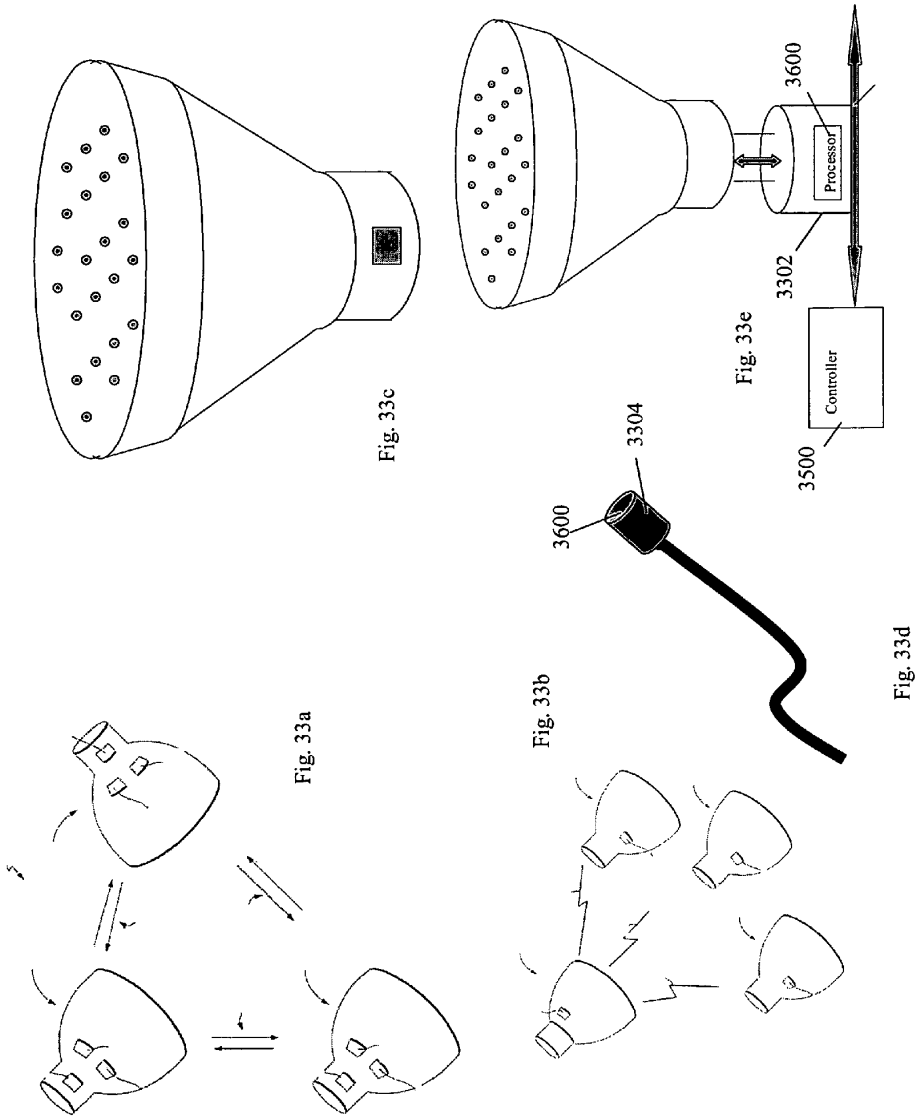

Fig. 33a

Fig. 33b

Fig. 33c

Fig. 33d

Fig. 33e

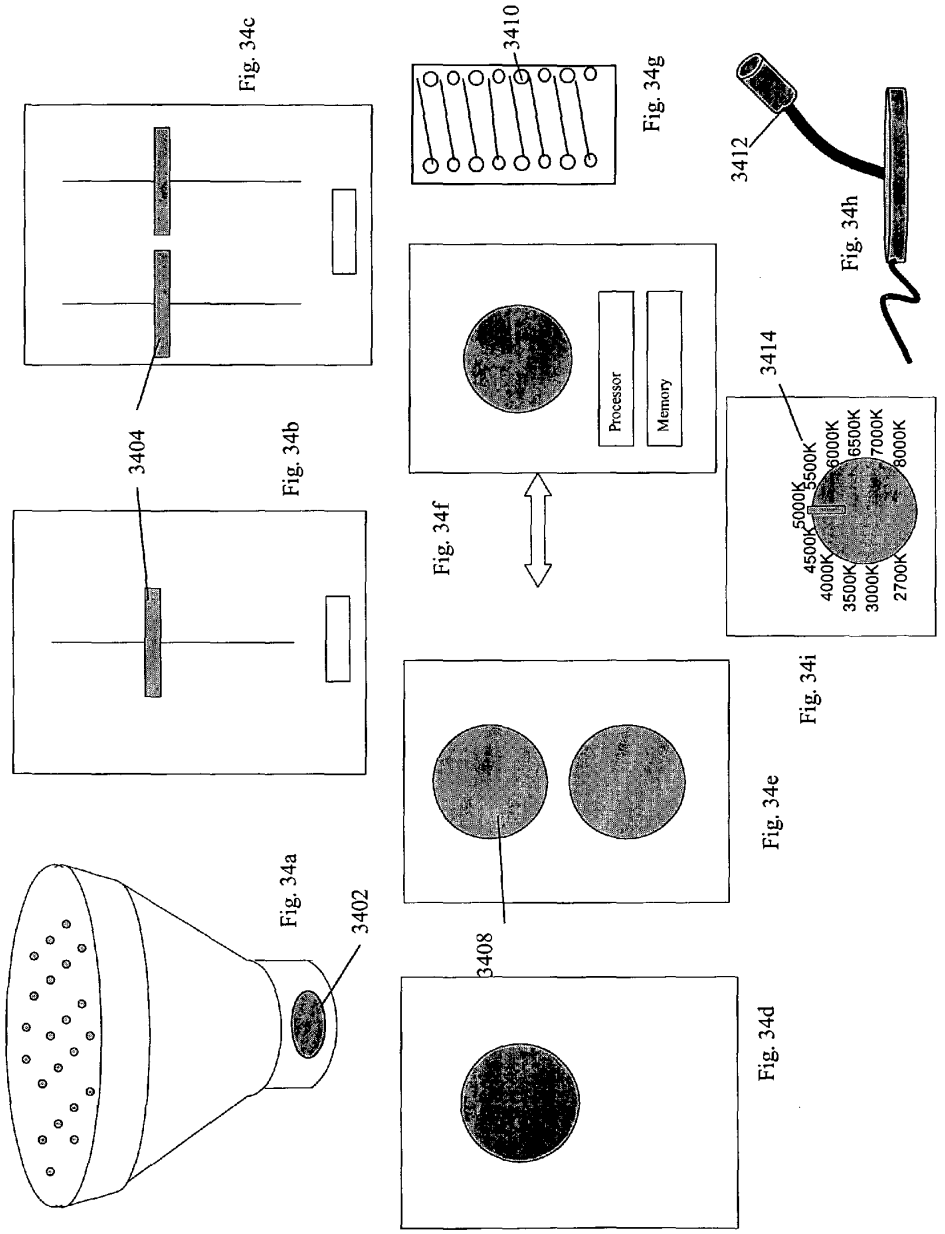
Fig. 34c
3404
Fig. 34b
Fig. 34a
3402
3410
Fig. 34g
Processor
Memory
Fig. 34f
3408
Fig. 34e
Fig. 34d
3412
Fig. 34h
3414
5000K
5500K
6000K
6500K
7000K
8000K
4500K
4000K
3500K
3000K
2700K
Fig. 34i

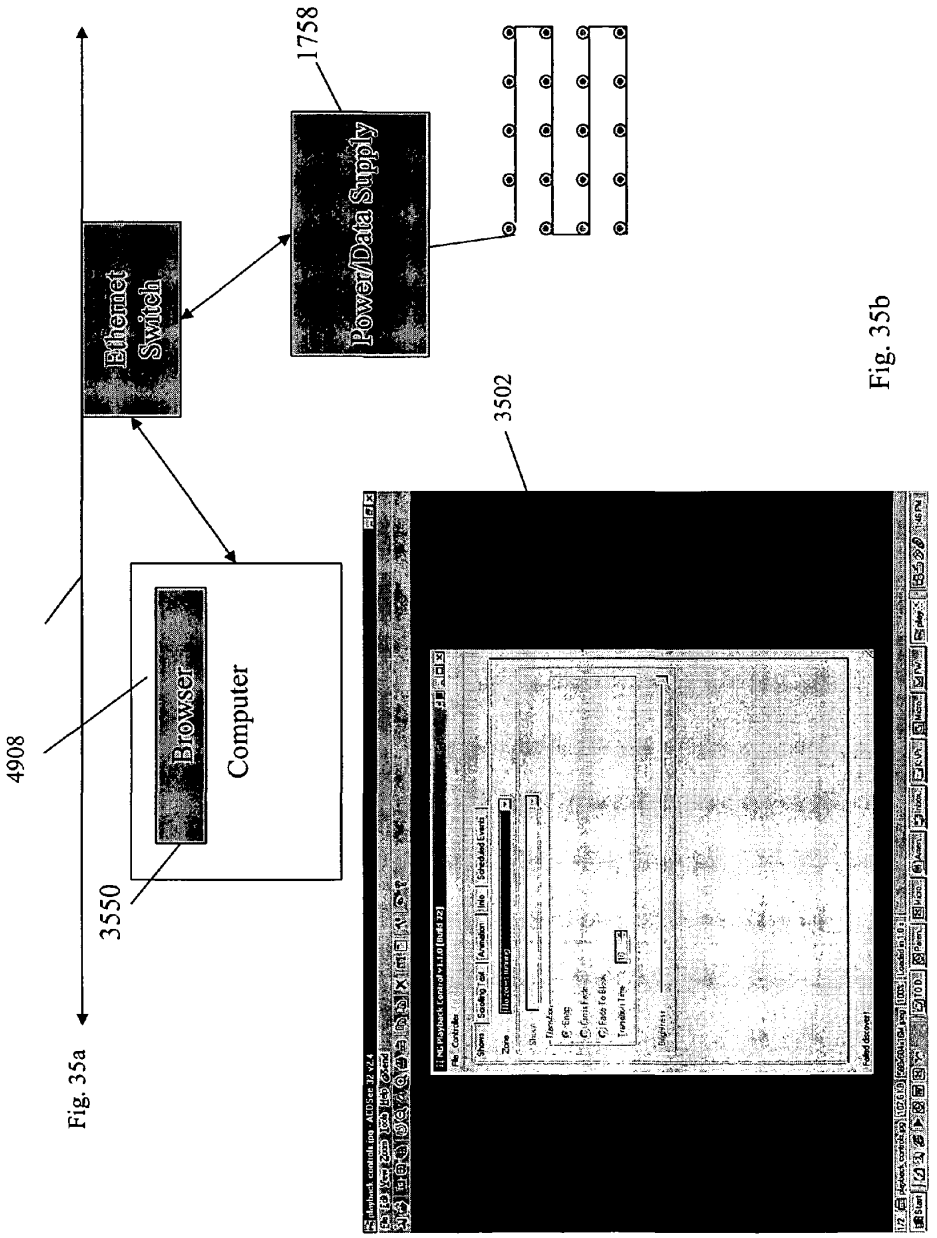

Fig. 35a

Fig. 35b

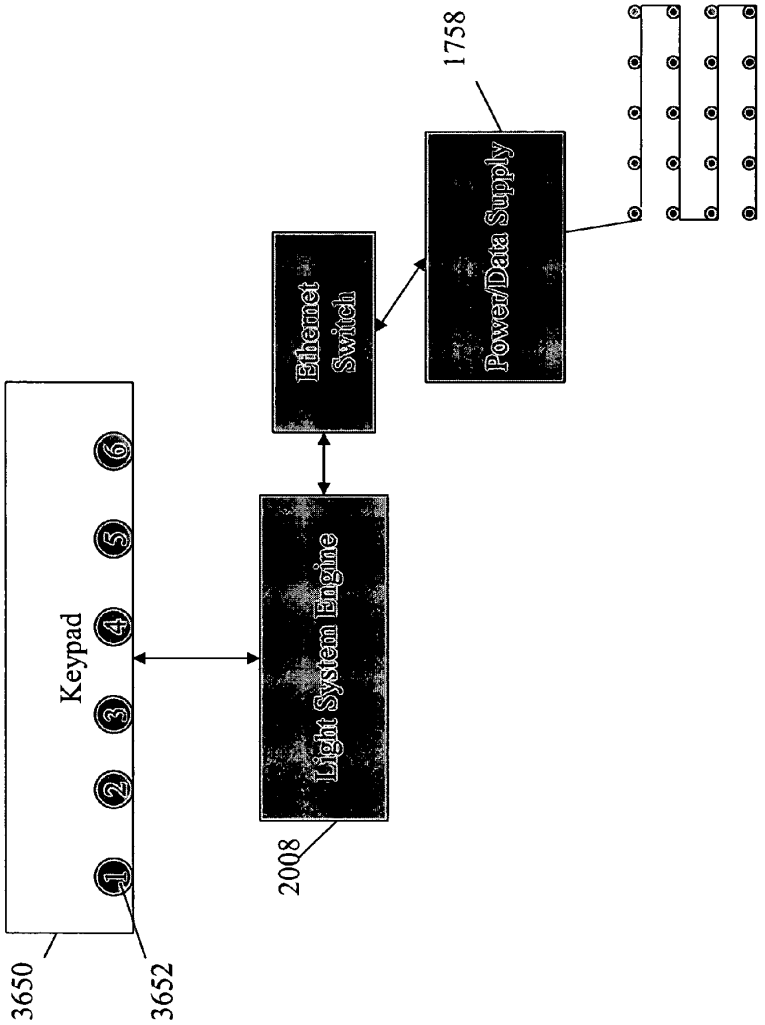
Keypad
1
2
3
4
5
6
3650
3652
Light System Engine
2008
Ethernet Switch
Power/Data Supply
1758

Fig. 36

3700

3702 Light System	3704 Time	3708 Position	3710 Lit Position	3712 Color Range	3714 Intensity	3718 Other Sys.	3720 Position
LS001	T1	(1, 3, 7)	Poly001	0-16000	0-100		
LS001	T2	(1, 3, 7)	Poly001	0-16000			
LS001	T3	(1, 3, 7)	Poly 002	0-16000			
LS002	T1	(0,0,0)	Poly 003	0-16000			
LS002	T2	(0,0,0)	Poly004	0-16000			
LS002	T3	(0,0,0)	Poly 005	0-16000			
LS00N	TN						

Fig. 37

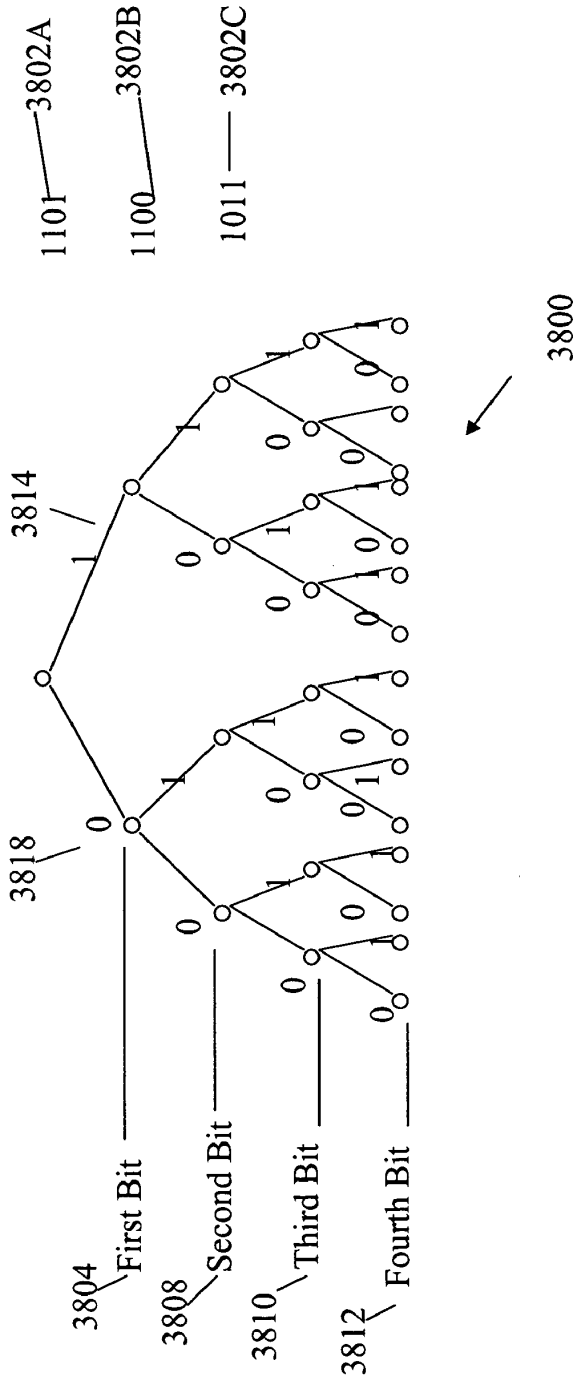
1101
3802A
1100
3802B
1011
3802C
3800
3814
3818
3804
First Bit
3808
Second Bit
3810
Third Bit
3812
Fourth Bit

Fig. 38

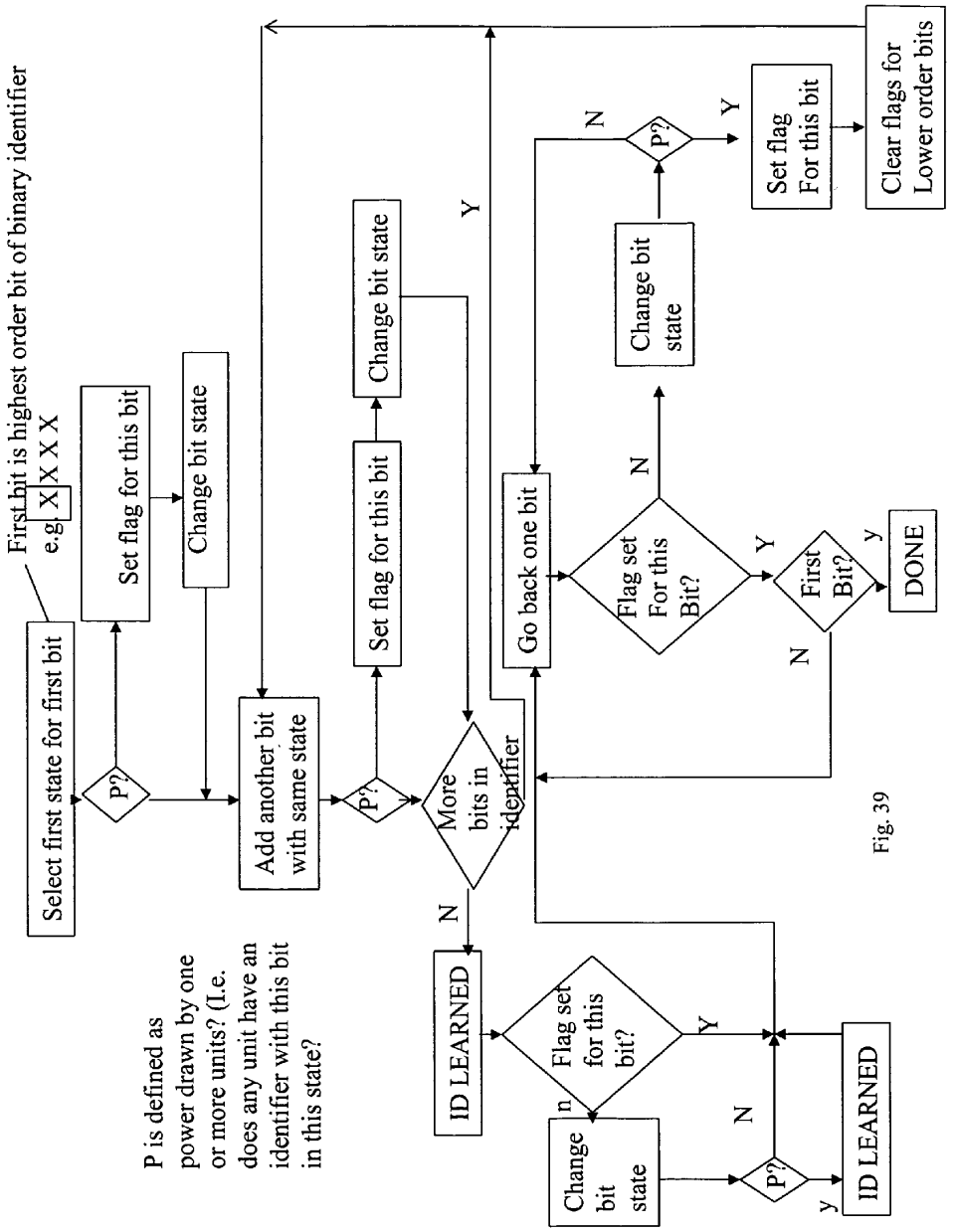
First bit is highest order bit of binary identifier
e.g. X X X X
Select first state for first bit
P?
Set flag for this bit
Change bit state
Add another bit with same state
P?
Set flag for this bit
Change bit state
More bits in identifier
Y
N
ID LEARNED
Flag set for this bit?
n
Y
Change bit state
P?
N
y
ID LEARNED
P is defined as power drawn by one or more units? (I.e. does any unit have an identifier with this bit in this state?
Go back one bit
Flag set For this Bit?
N
Y
First Bit?
N
Y
y
DONE
Change bit state
P?
N
Y
Set flag For this bit
Clear flags for Lower order bits

Fig. 39

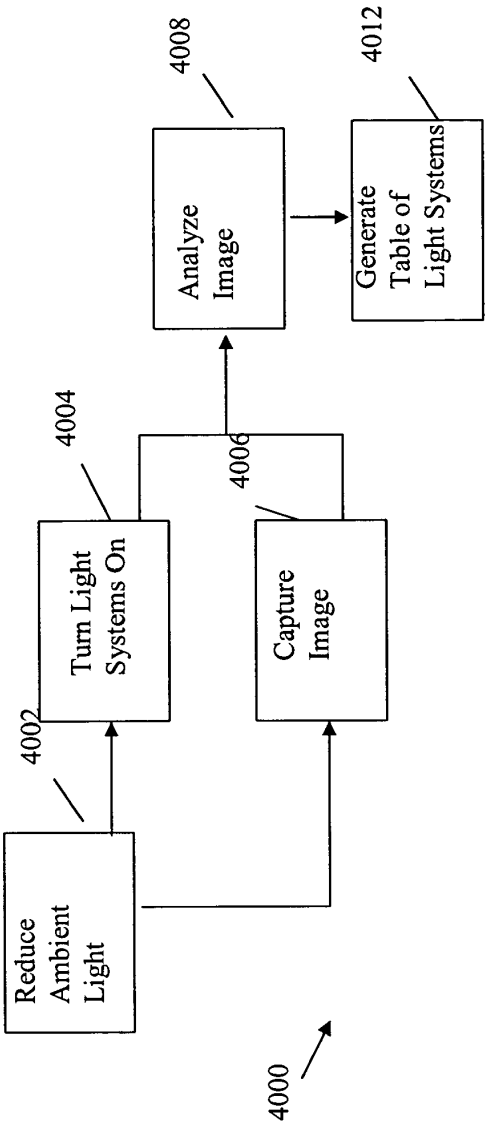
4000
Reduce Ambient Light
4002
Turn Light Systems On
4004
Capture Image
4006
Analyze Image
4008
Generate Table of Light Systems
4012

Fig. 40

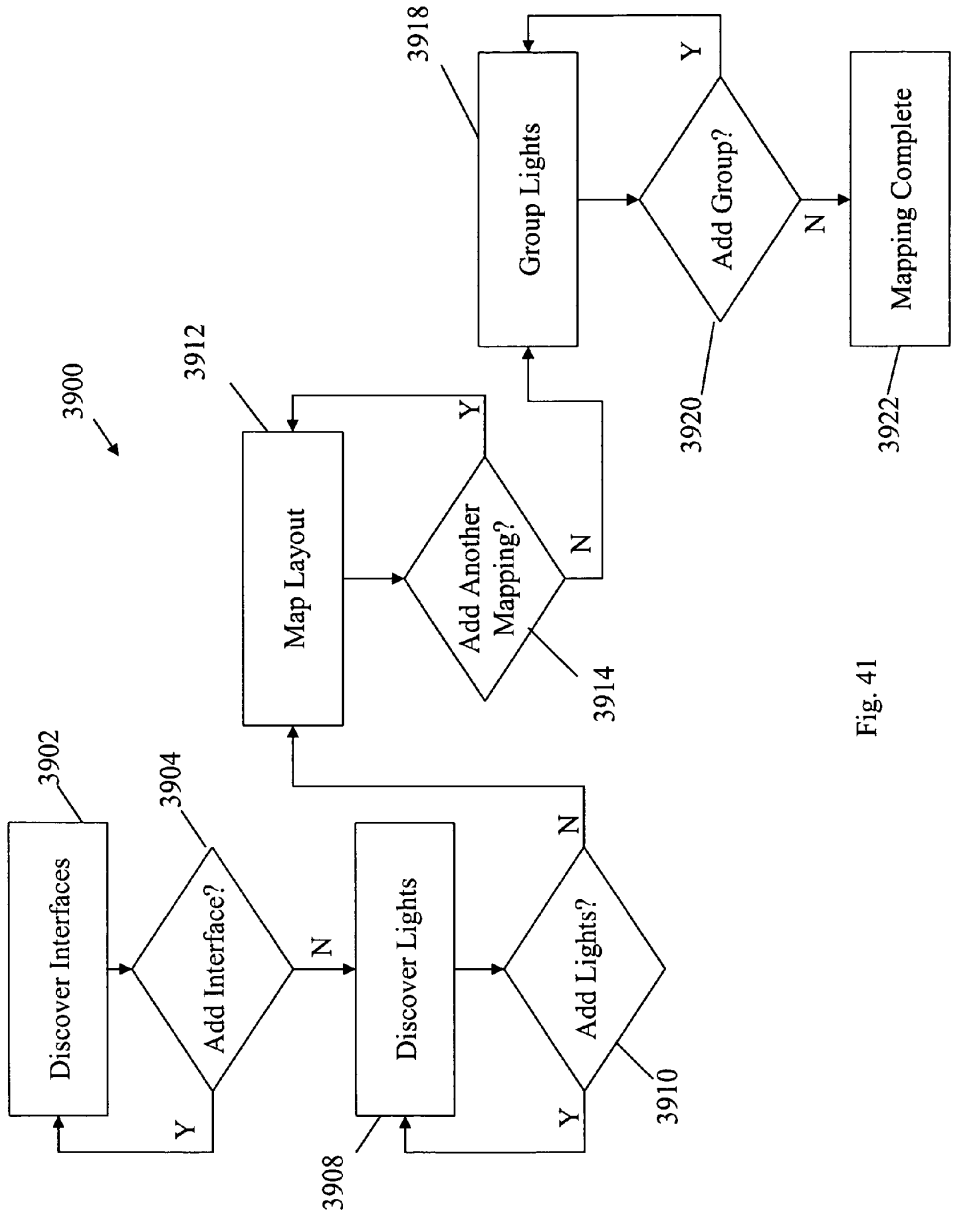
3900
Discover Interfaces
3902
Add Interface?
3904
Y
N
Discover Lights
3908
Add Lights?
3910
Y
N
Map Layout
3912
Add Another Mapping?
3914
Y
N
Group Lights
3918
Add Group?
3920
Y
N
Mapping Complete
3922

Fig. 41

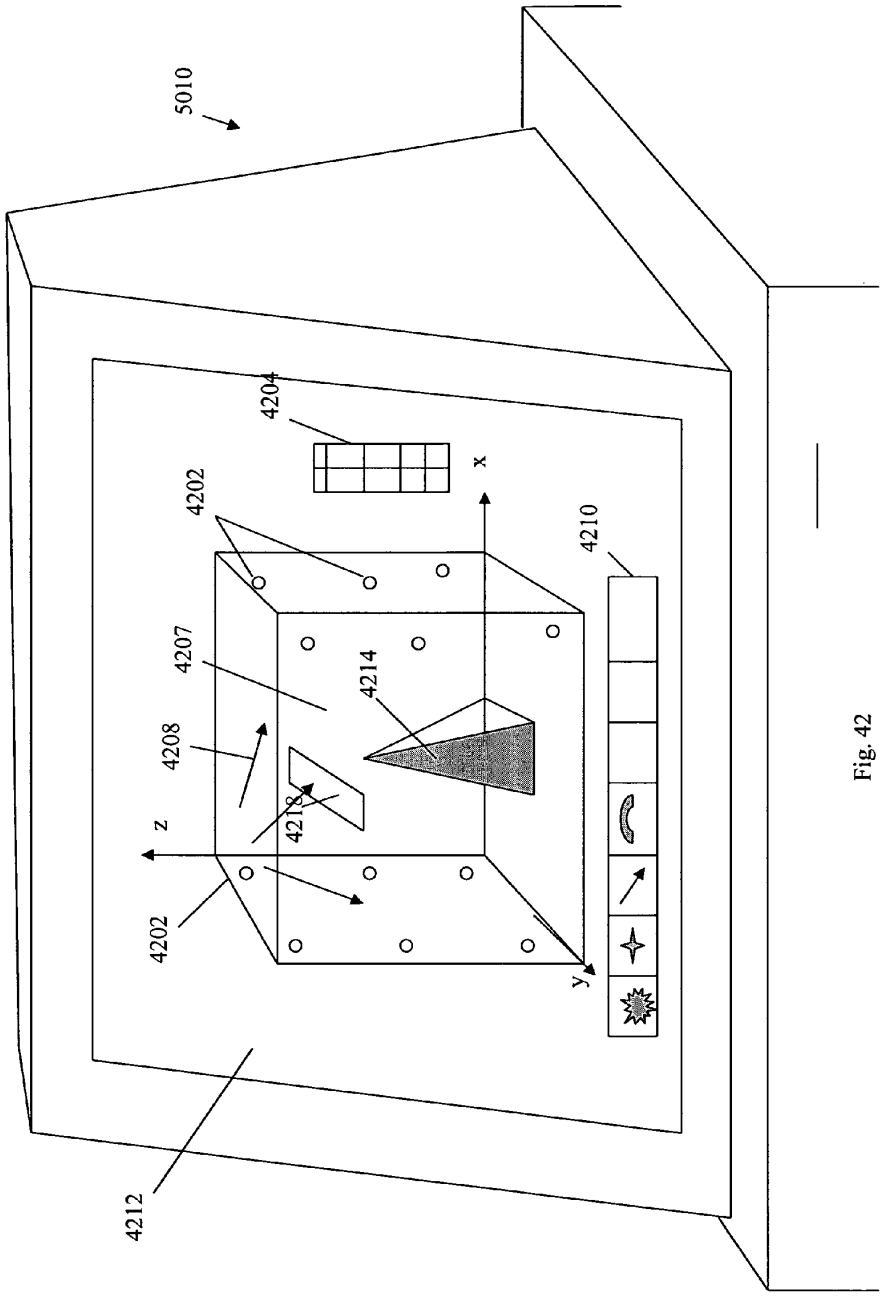

Fig. 42

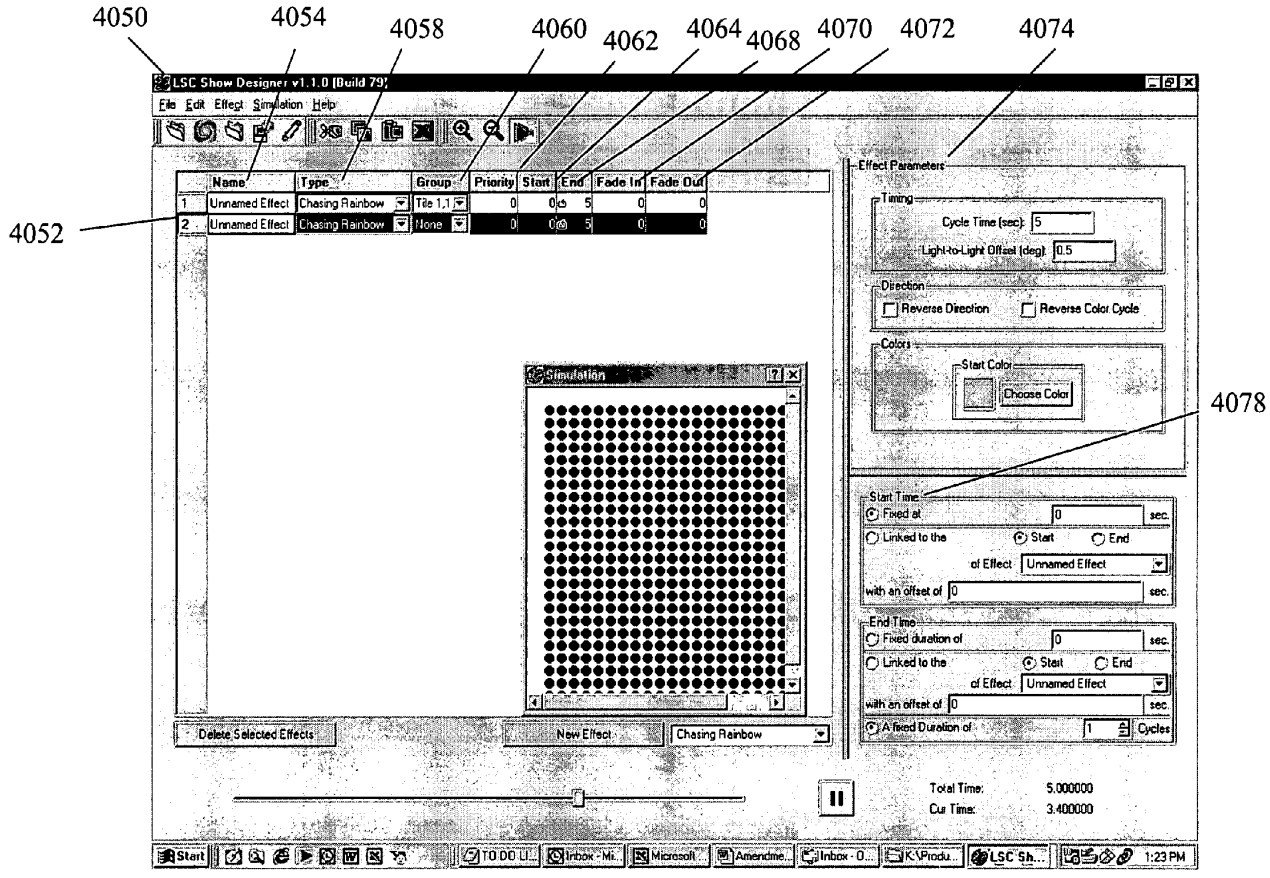
4050
4054
4058
4060
4062
4064
4068
4070
4072
4074
4052
4078
LSC Show Designer v1.1.0 (Build 79)
File Edit Effect Simulation Help
Name
Type
Group
Priority
Start
End
Fade In
Fade Out
Unnamed Effect
Chasing Rainbow
Tile 1,1
None
Simulation
Effect Parameters
Timing
Cycle Time (sec)
Light-to-Light Offset (deg)
Direction
Reverse Direction
Reverse Color Cycle
Color
Start Color
Choose Color
Start Time
Fixed at
Linked to the
Start
End
of Effect
with an offset of
End Time
Fixed duration of
A fixed Duration of
Cycles
Delete Selected Effects
New Effect
Total Time:
Cur Time:
Start

Fig. 43

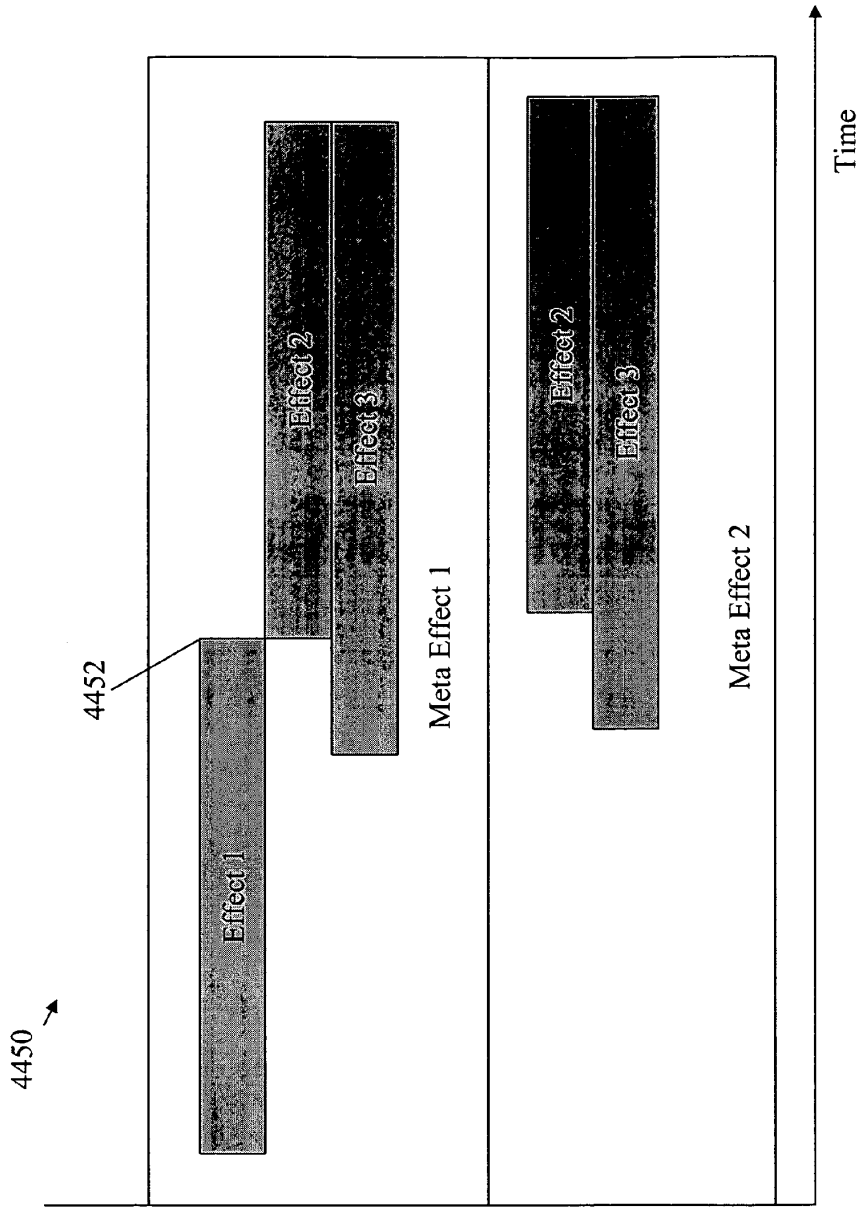
4450
4452
Effect 1
Effect 2
Effect 3
Meta Effect 1
Effect 2
Effect 3
Meta Effect 2
Time

Fig. 44

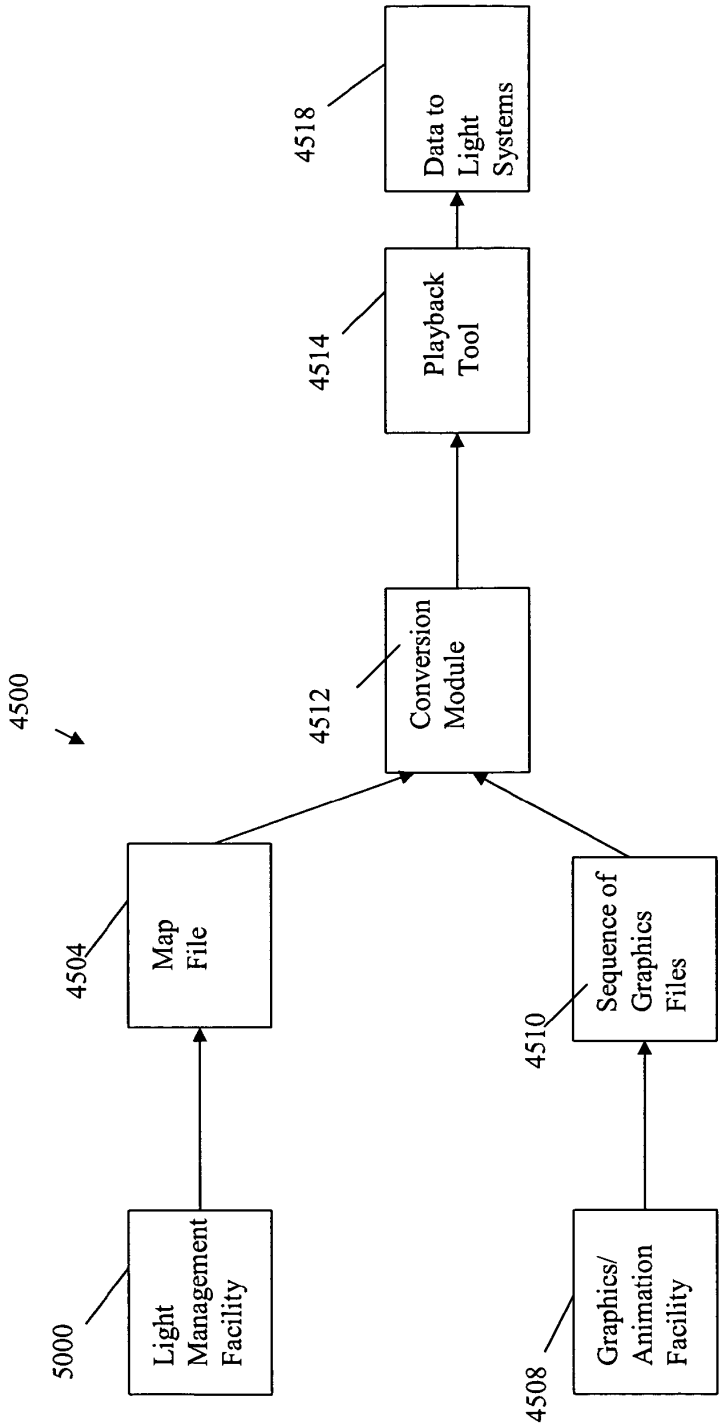
4500
5000
Light Management Facility
4504
Map File
4508
Graphics/ Animation Facility
4510
Sequence of Graphics Files
4512
Conversion Module
4514
Playback Tool
4518
Data to Light Systems

Fig. 45

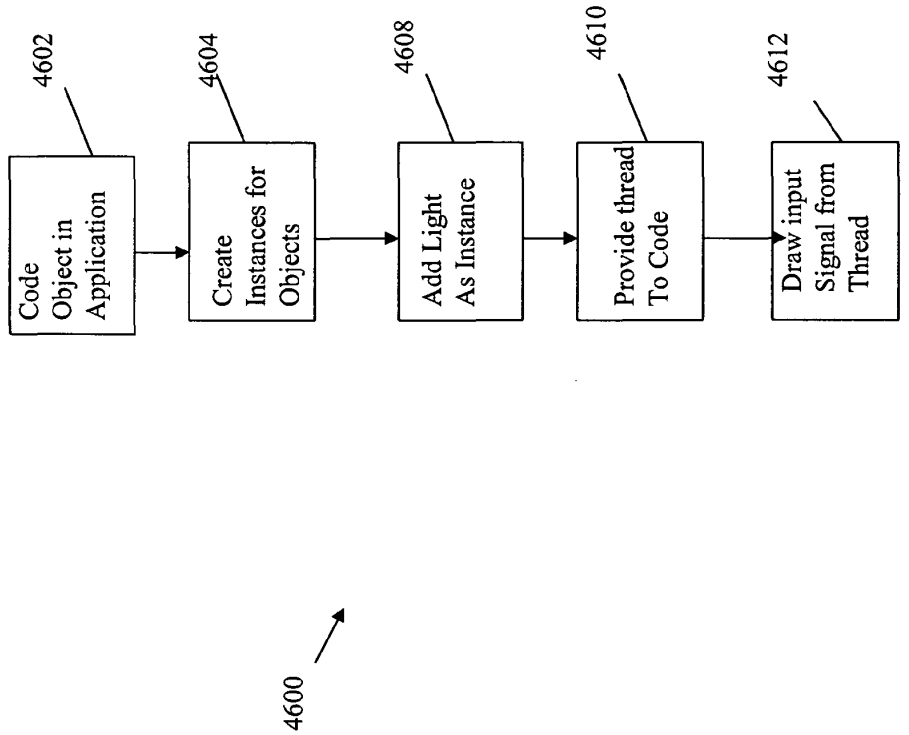
4600
4602
Code Object in Application
4604
Create Instances for Objects
4608
Add Light As Instance
4610
Provide thread To Code
4612
Draw input Signal from Thread

Fig. 46

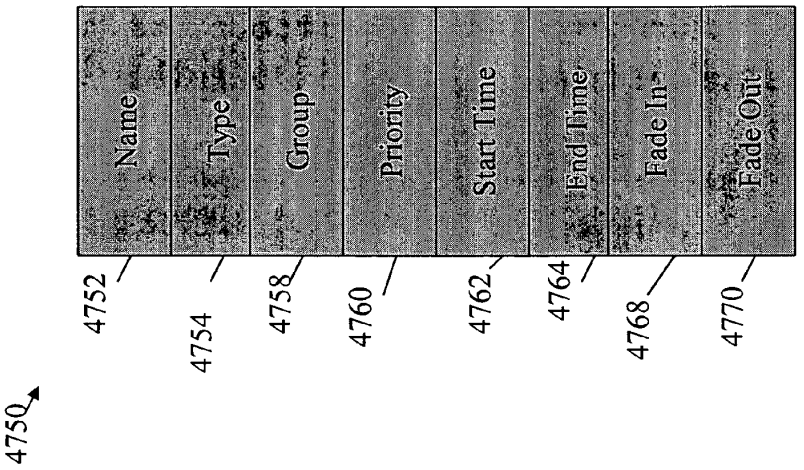
4750
4752
Name
4754
Type
4758
Group
4760
Priority
4762
Start Time
4764
End Time
4768
Fade In
4770
Fade Out

Fig. 47

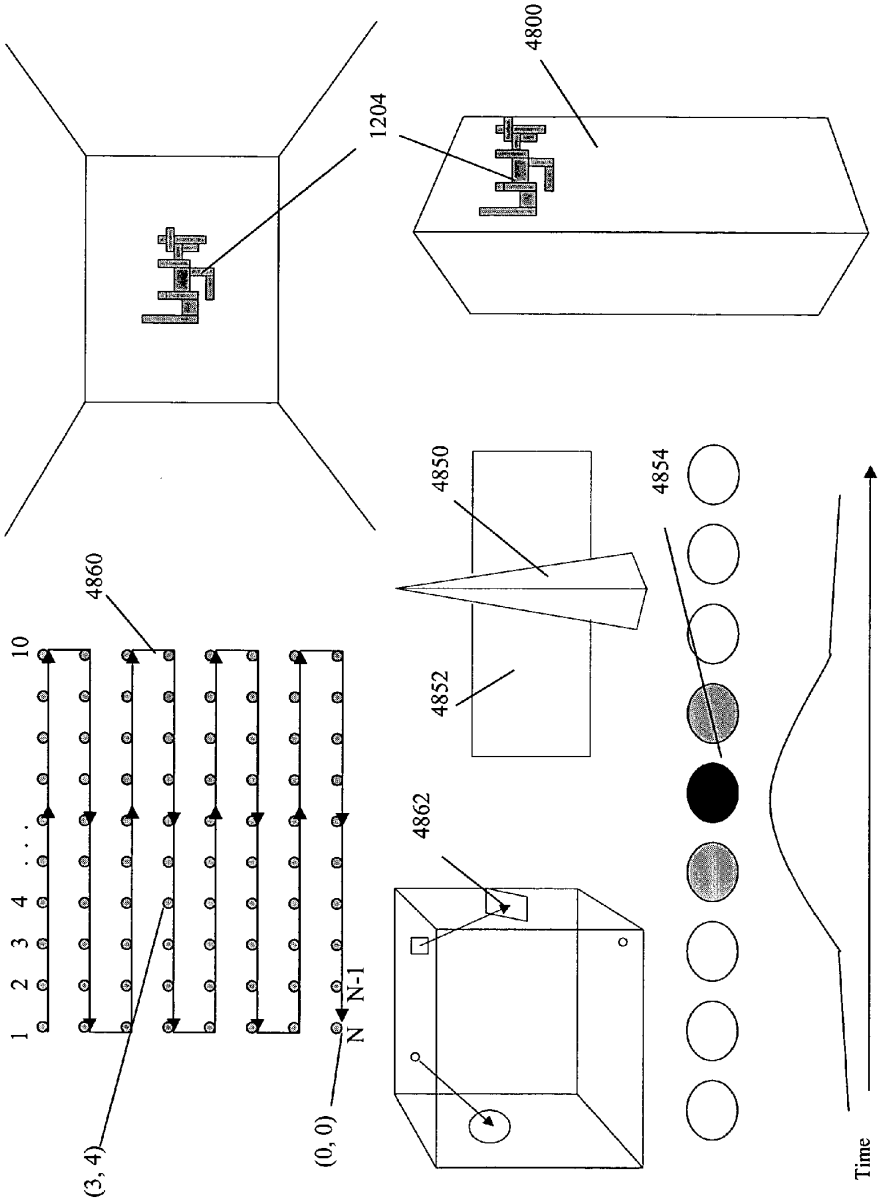

Fig.48

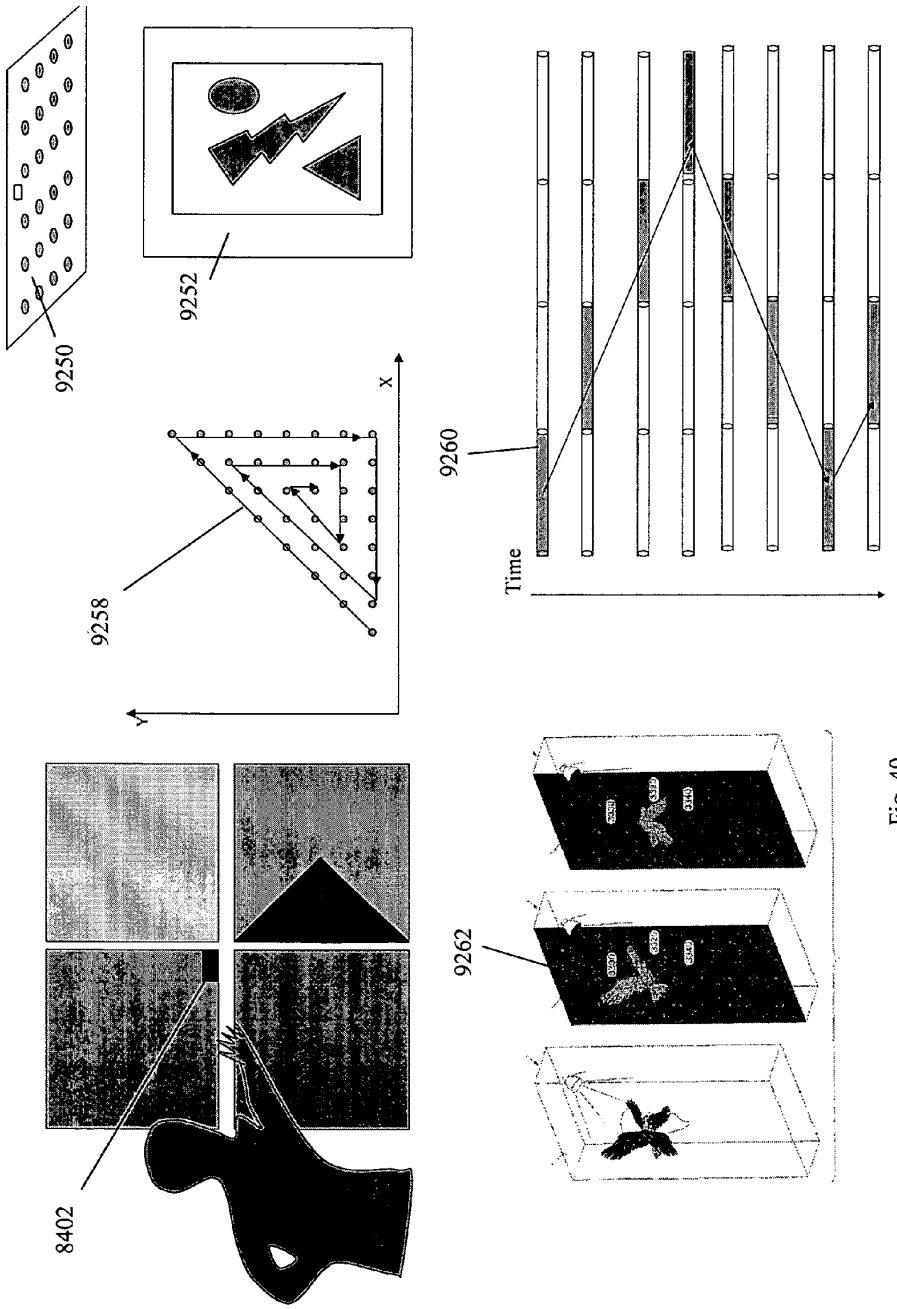

Fig. 49

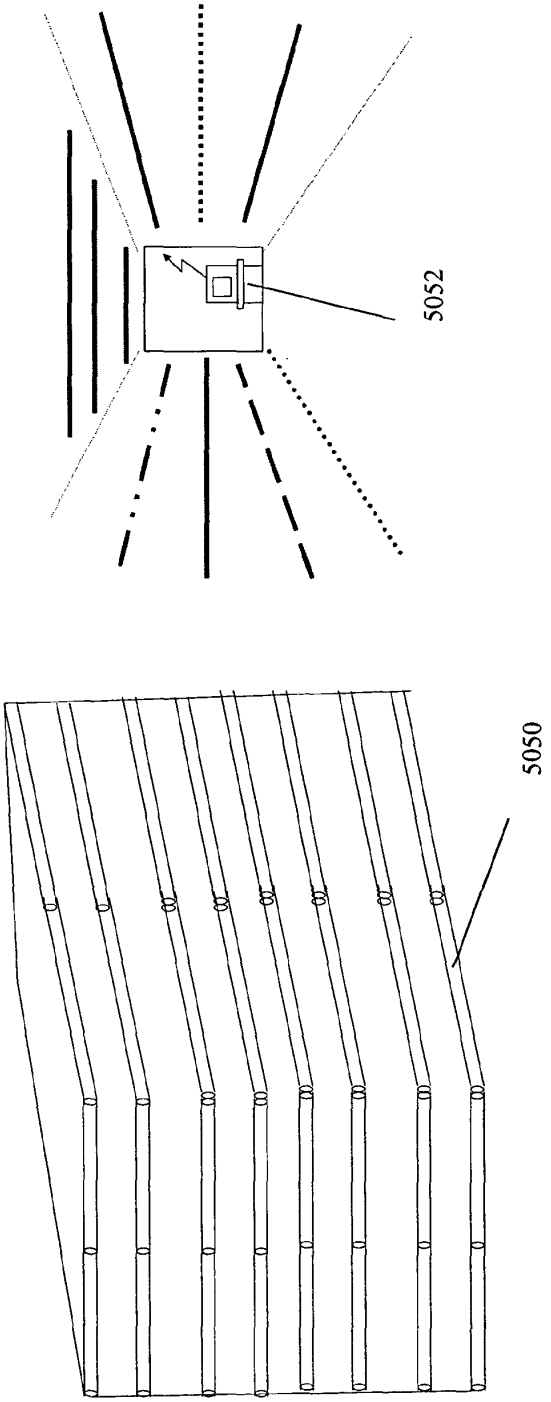

Fig. 50

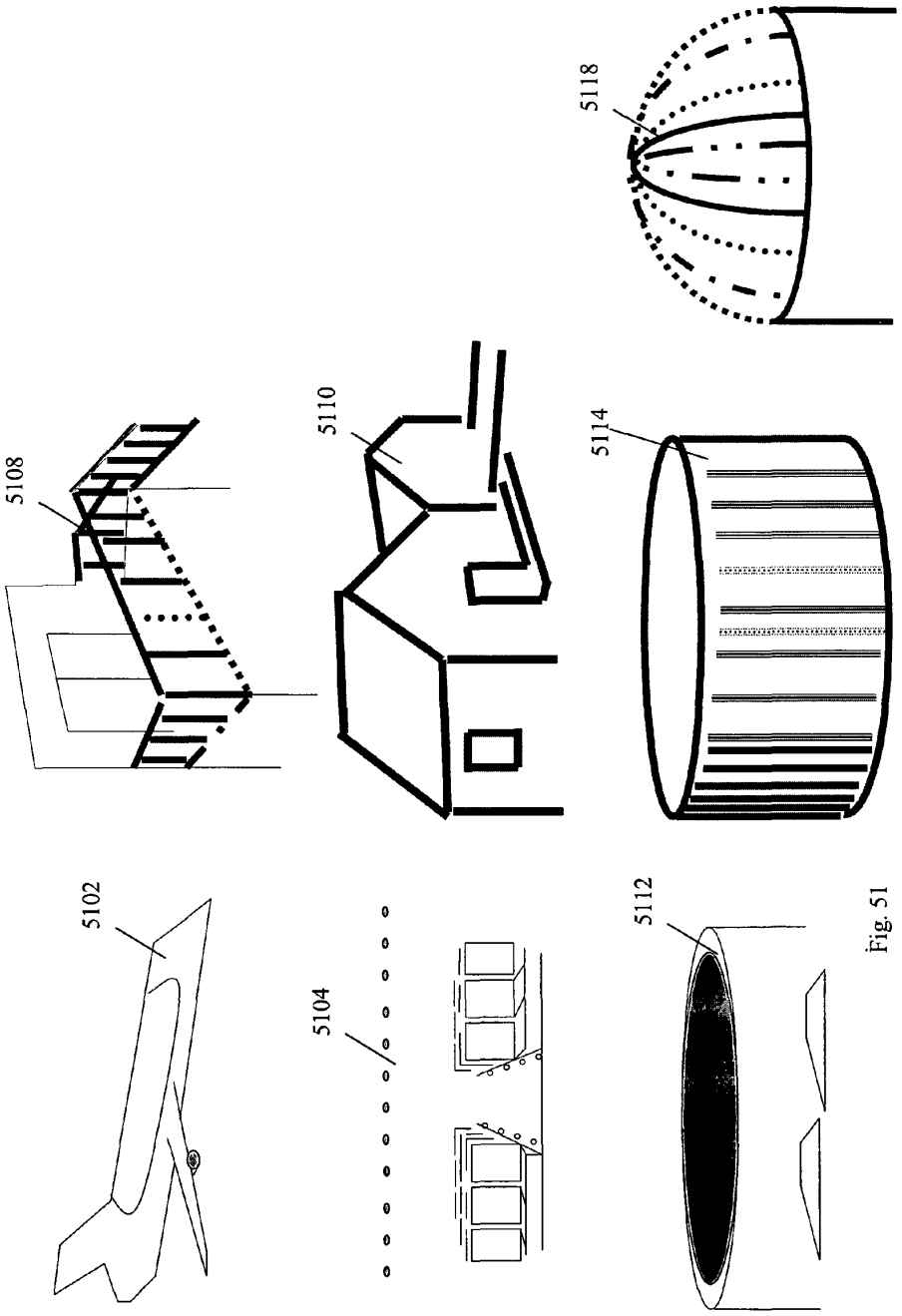

Fig. 51

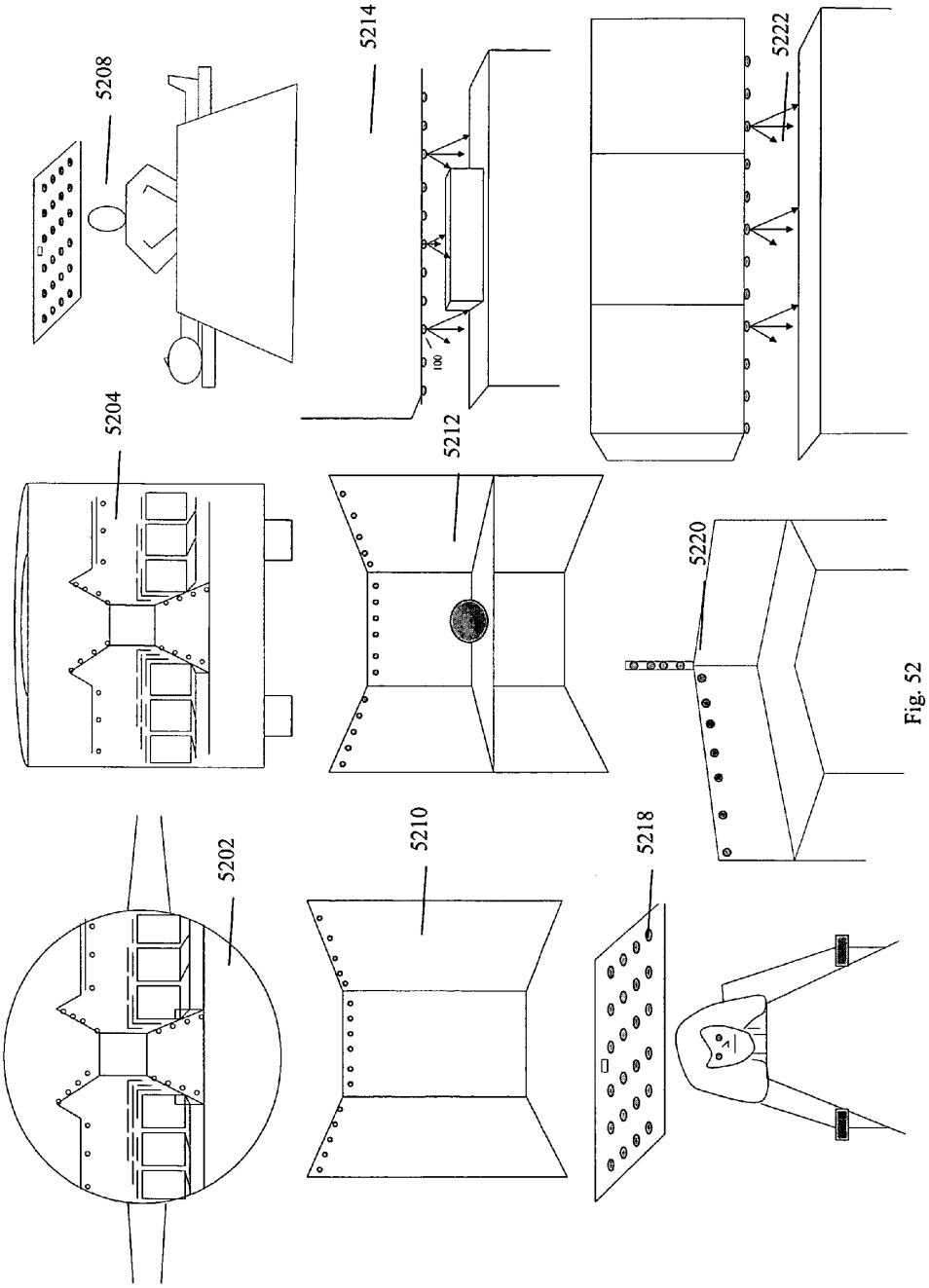

Fig. 52

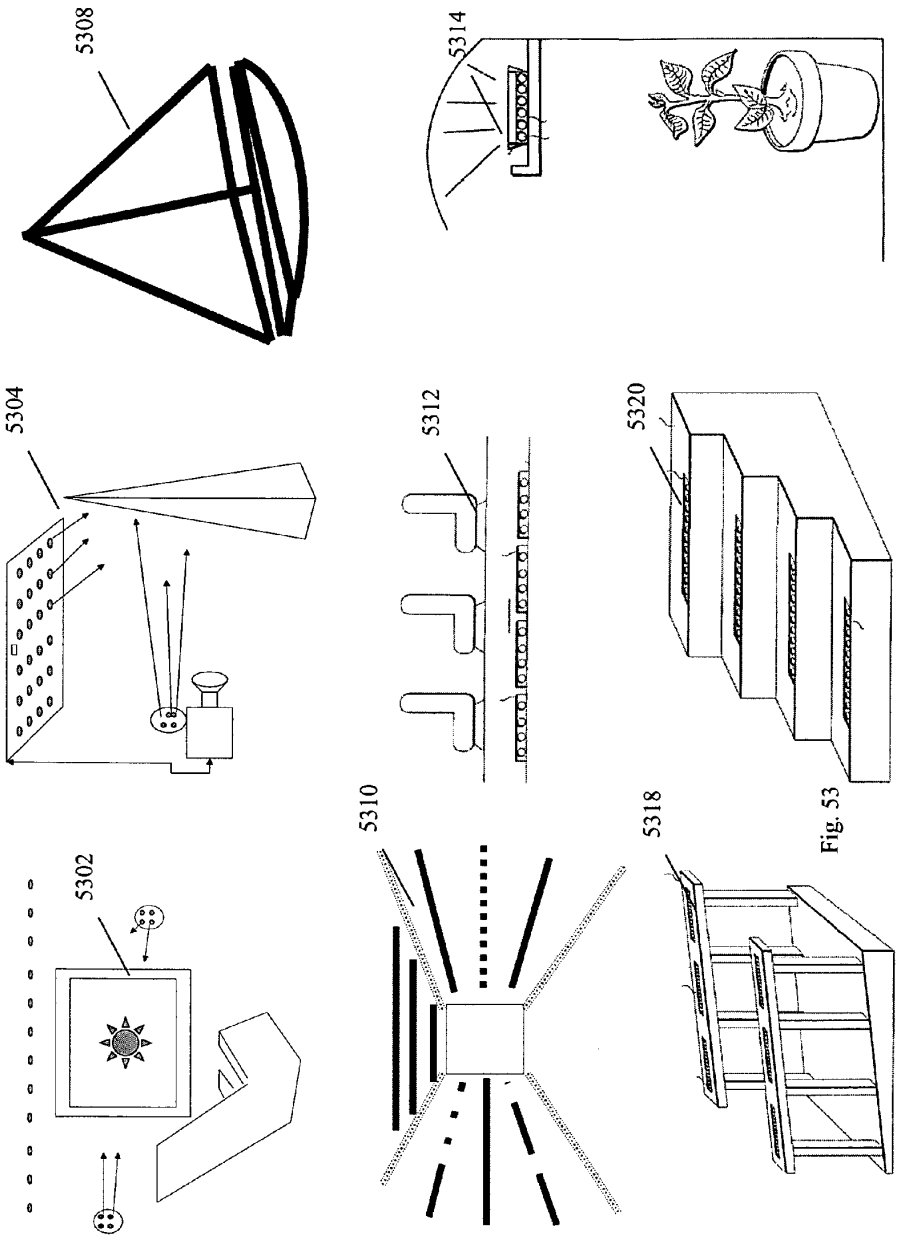

Fig. 53

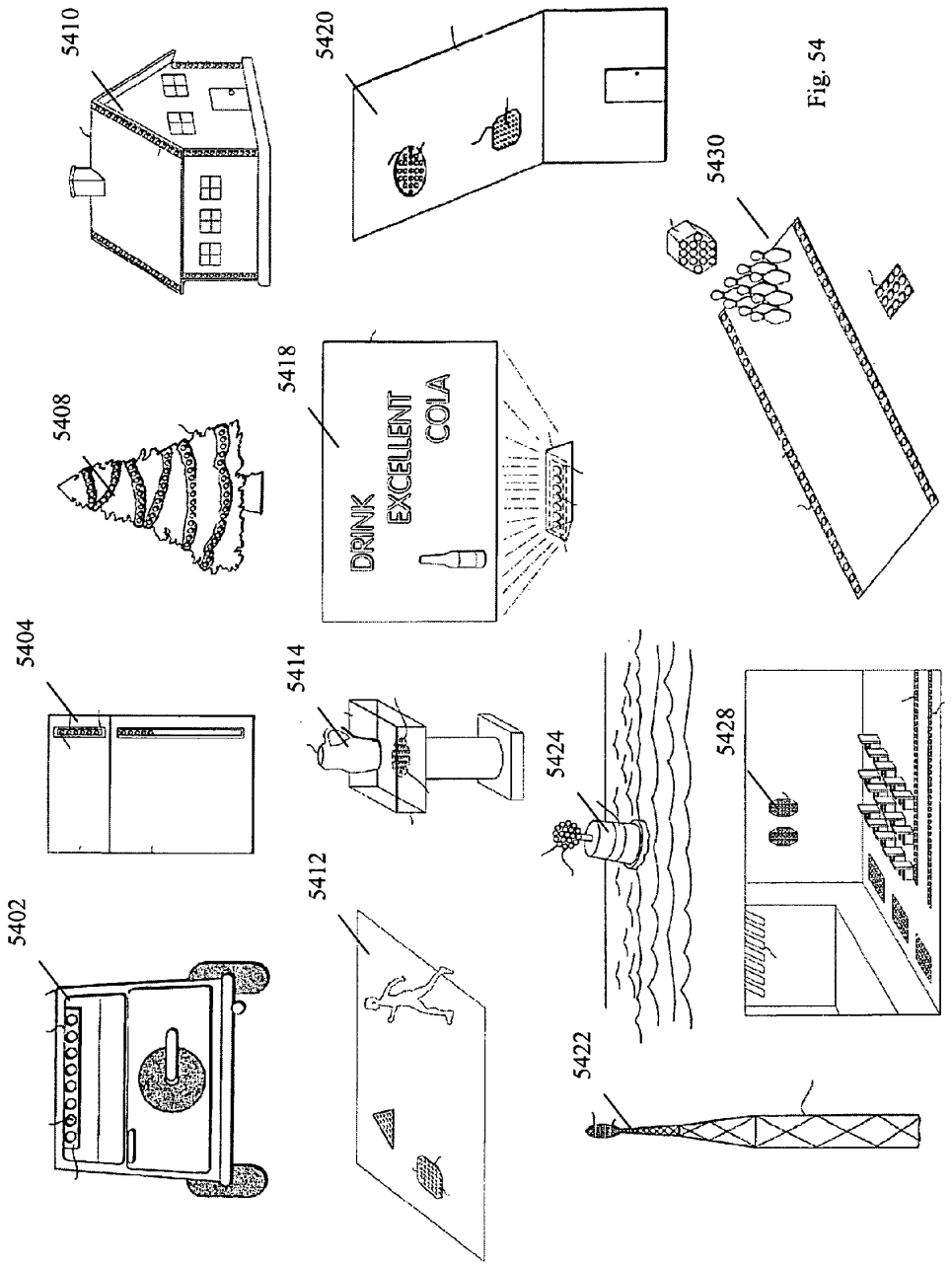
5410
5420
5408
5418
DRINK
EXCELLENT
COLA
5430
5404
5414
5424
5428
5402
5412
5422

Fig. 54

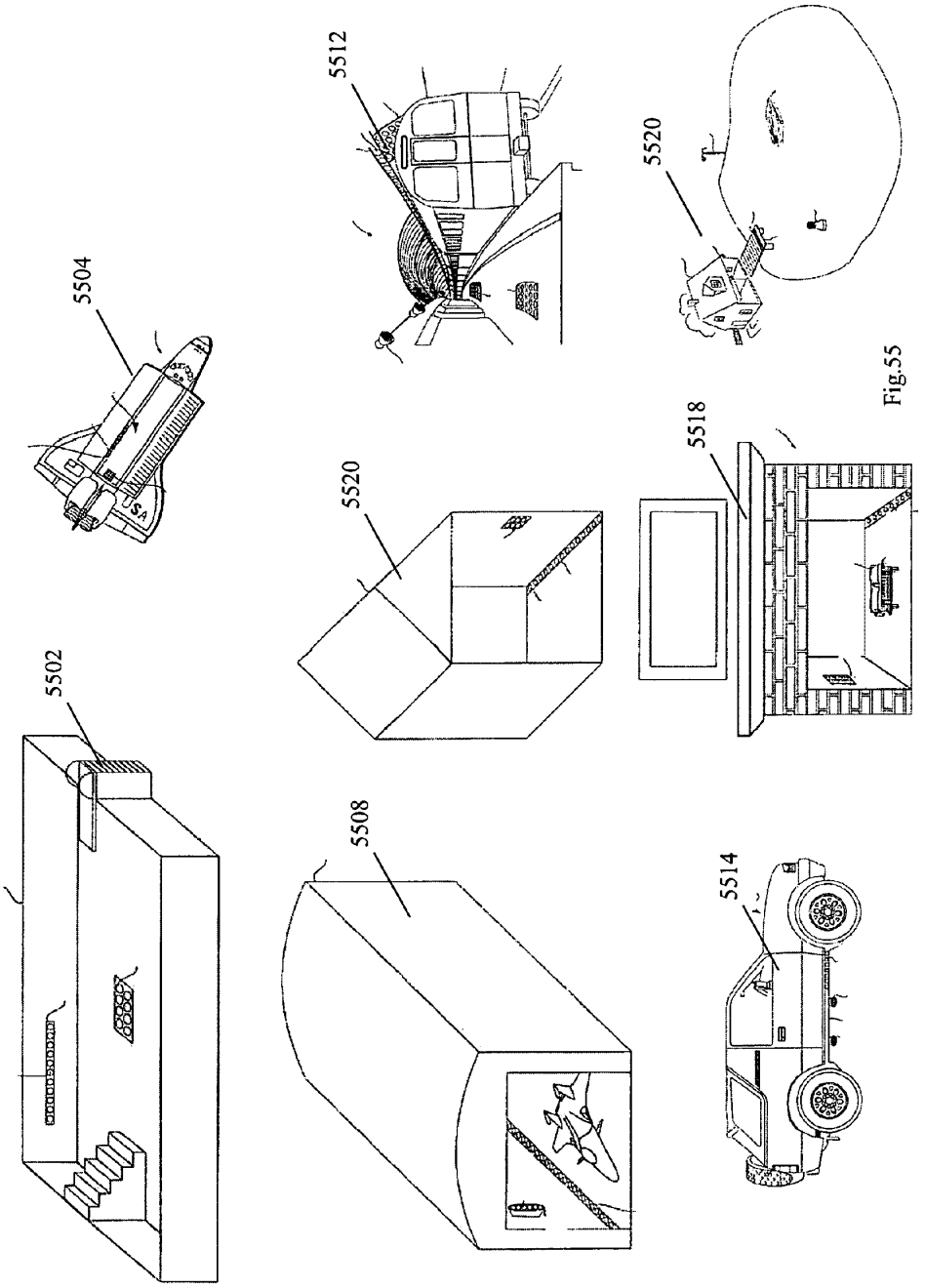

Fig.55

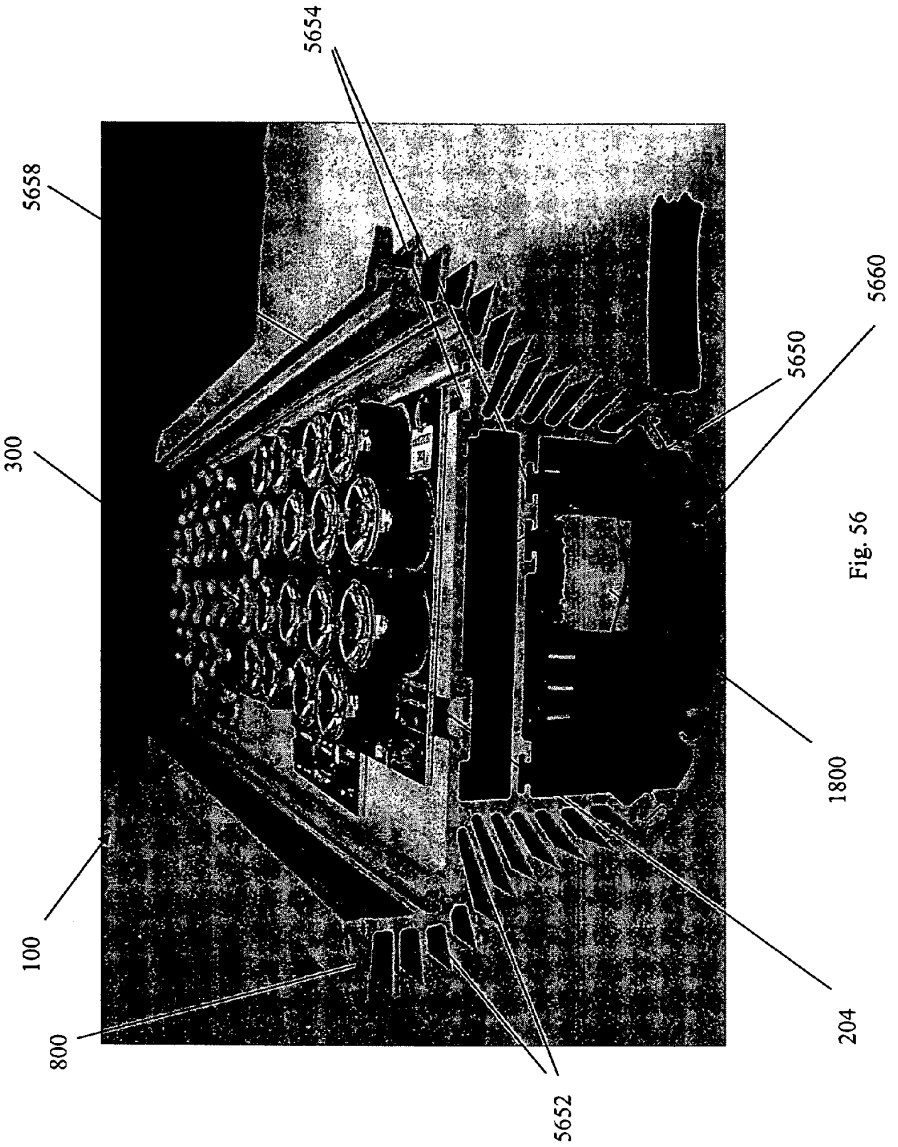

Fig. 56

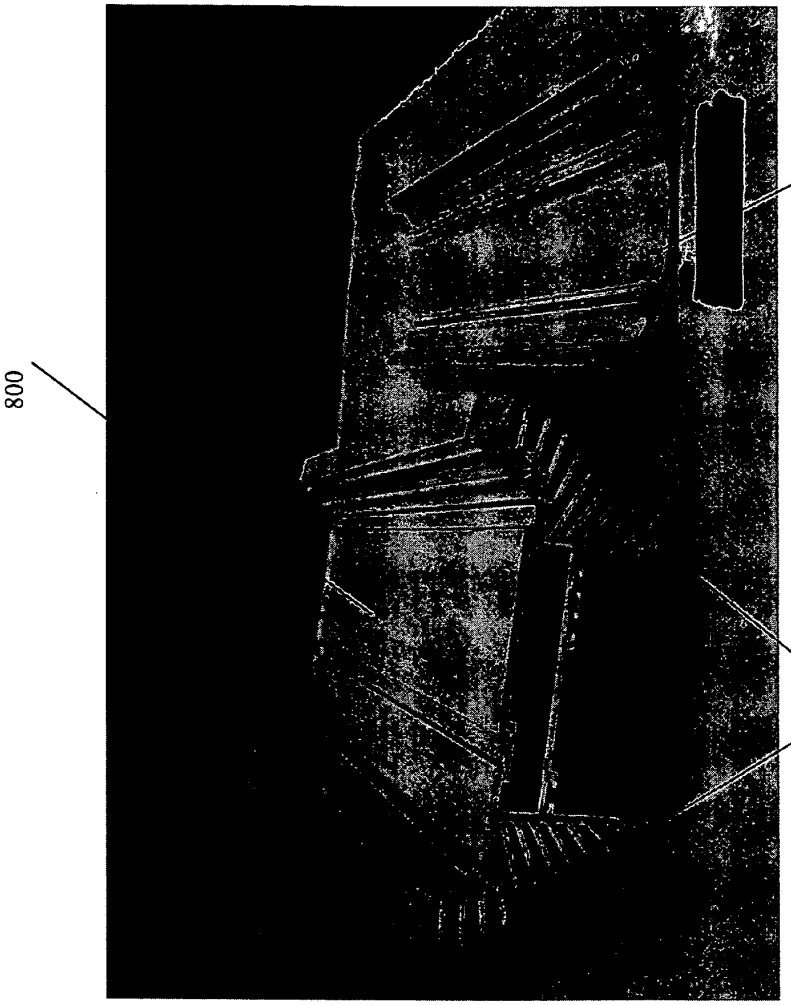

Fig. 57

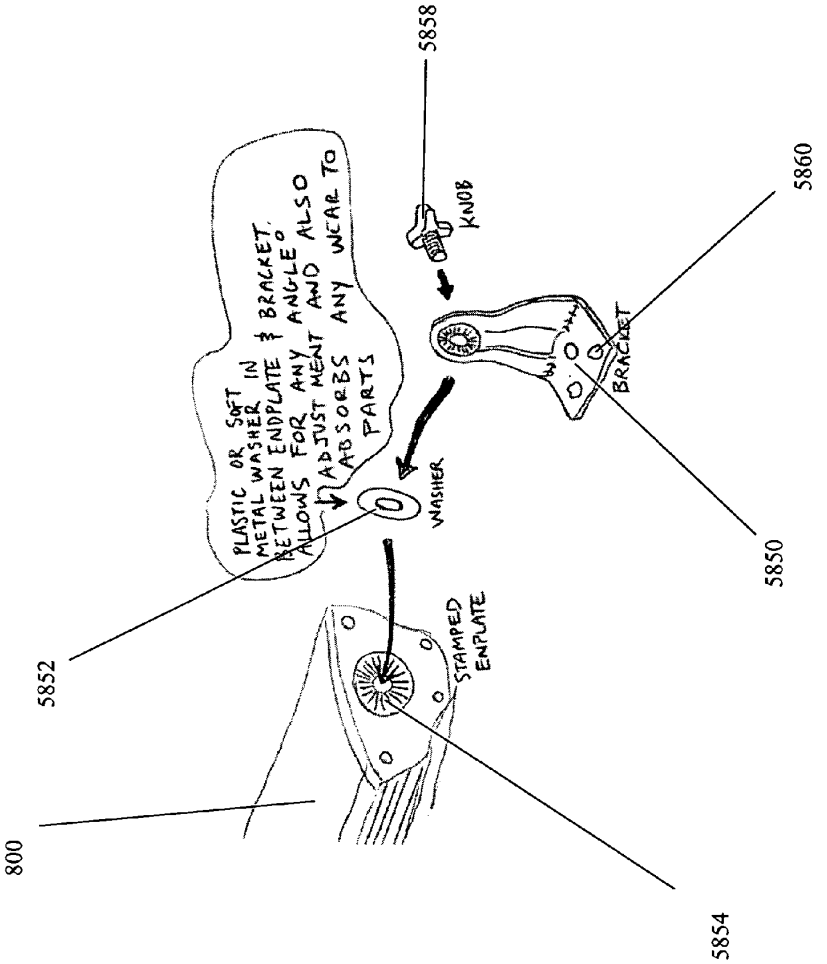
PLASTIC OR SOFT METAL WASHER IN BETWEEN ENDPLATE & BRACKET. ALLOWS FOR ANY ANGLE ADJUSTMENT AND ALSO ABSORBS ANY WEAR TO PARTS
5858
KNOB
5860
BRACKET
5850
WASHER
5852
STAMPED ENDPLATE
800
5854

Fig. 58

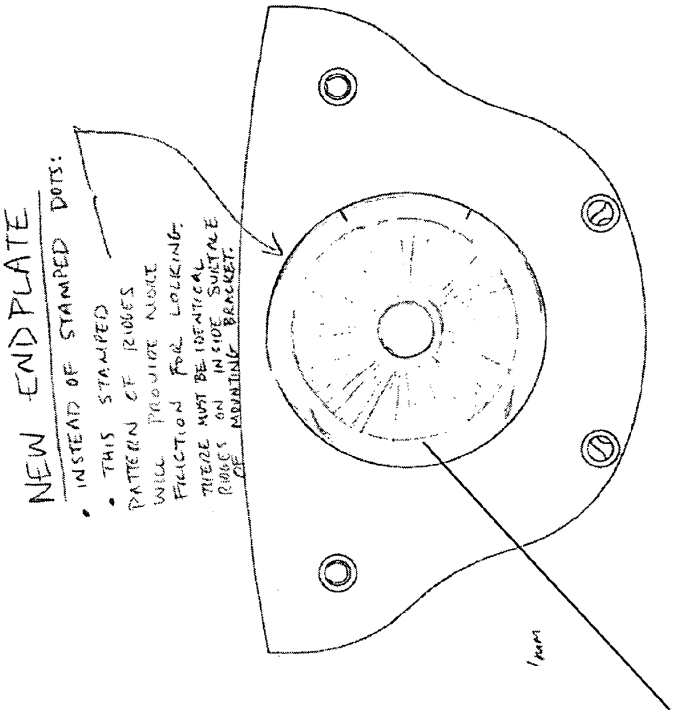
NEW END PLATE
• INSTEAD OF STAMPED DOTS:
• THIS STAMPED PATTERN OF RIDGES WILL PROVIDE MORE FRICTION FOR LOCKING.
THERE MUST BE IDENTICAL RIDGES ON INSIDE SURFACE OF MOUNTING BRACKET.
1mm

5854

Fig. 59

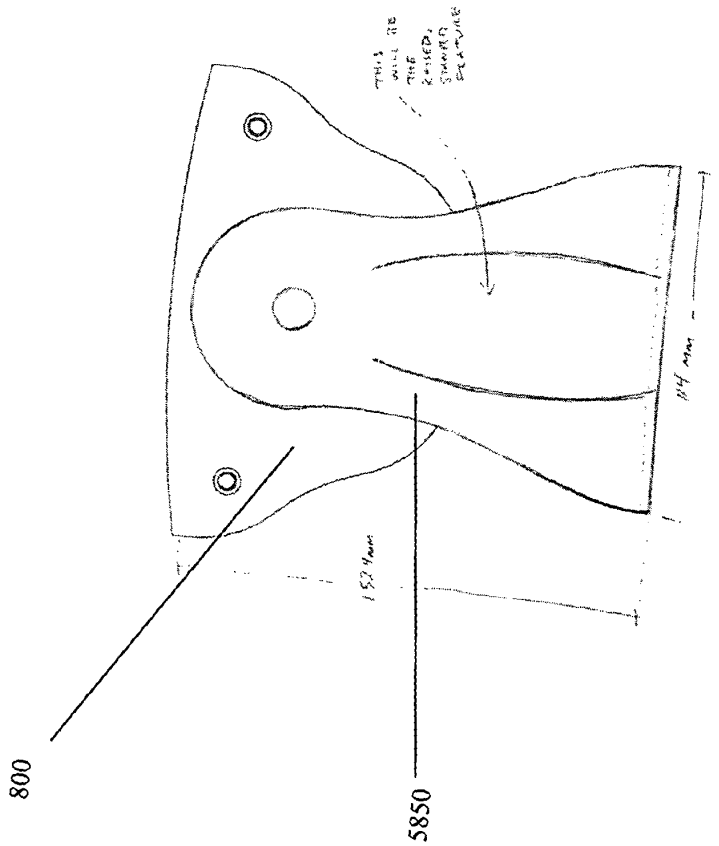

Fig. 60

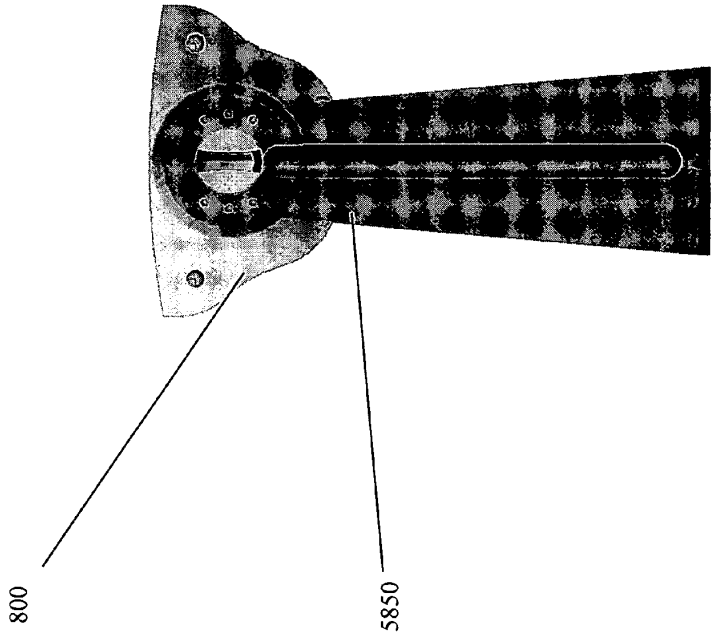

Fig. 61

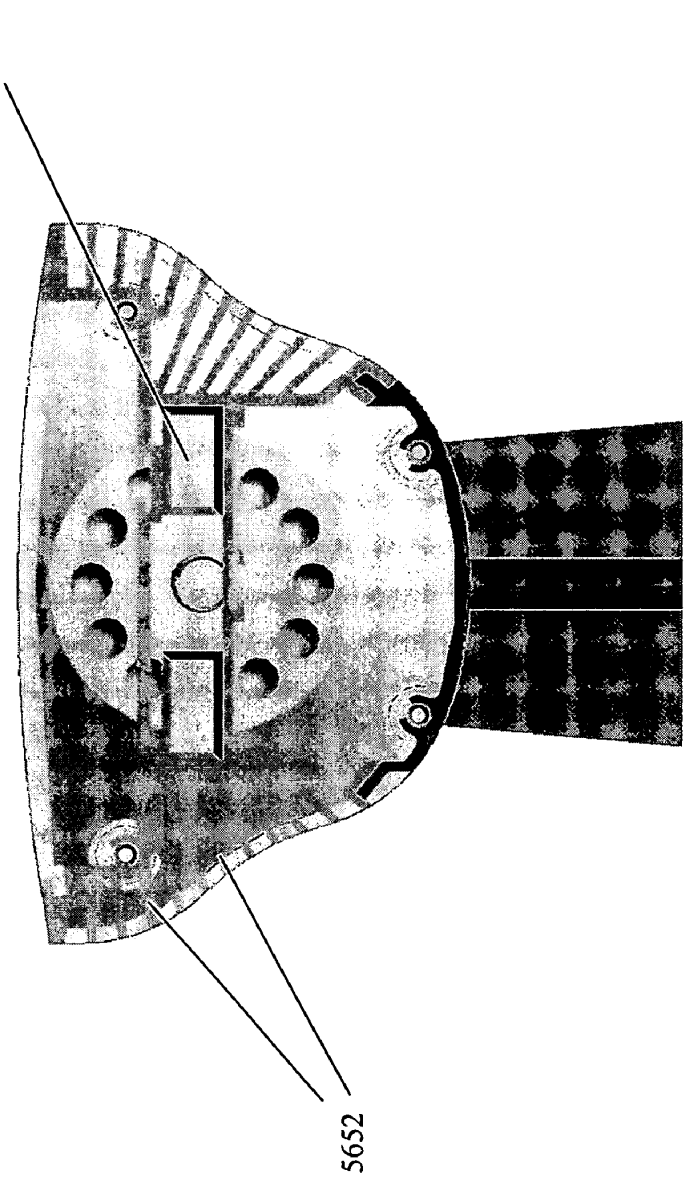

Fig. 62

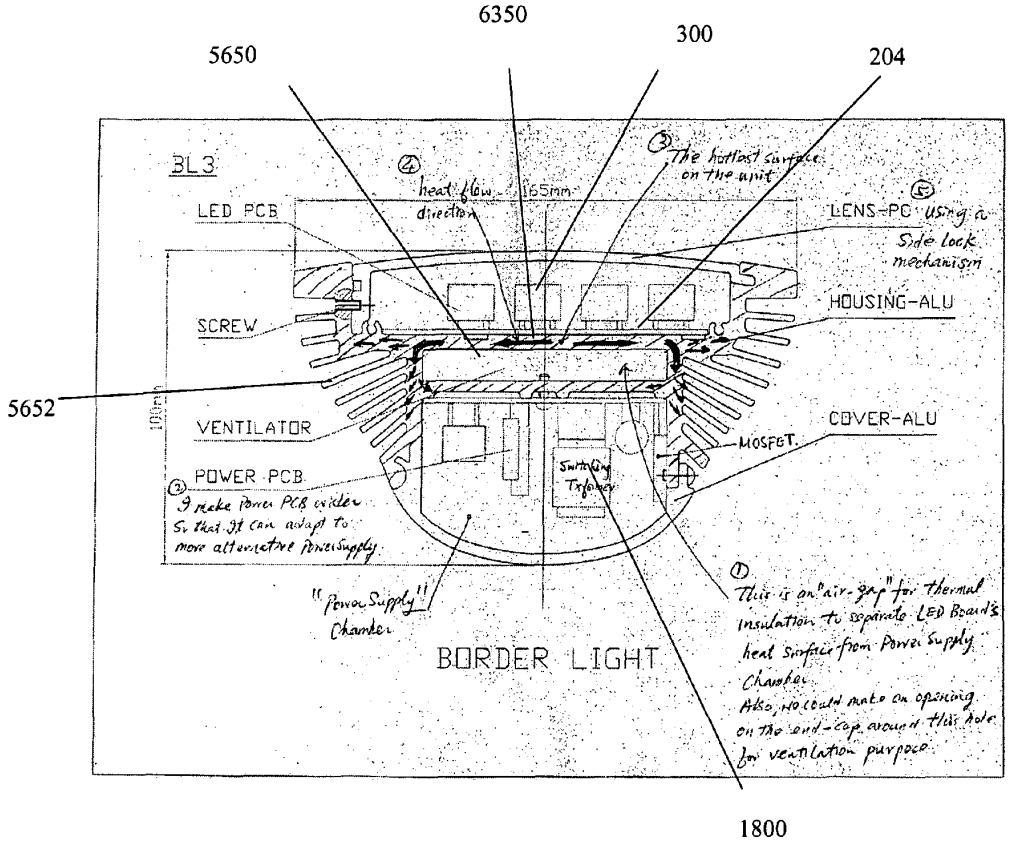
6350
300
5650
204
BL3
④ heat flow direction
165mm
③ The hottest surface on the unit
⑤ LENS-PC using a Side lock mechanism
LED PCB
HOUSING-ALU
SCREW
5652
VENTILATOR
COVER-ALU
MOSFET
POWER PCB
② I make Power PCB wider So that it can adapt to more alternative Power Supply
"Power Supply" Chamber
BORDER LIGHT
① This is an "air-gap" for thermal insulation to separate LED Board's heat surface from Power Supply Chamber. Also, we could make an opening on the end-cap around this hole for ventilation purpose
1800

Fig. 63

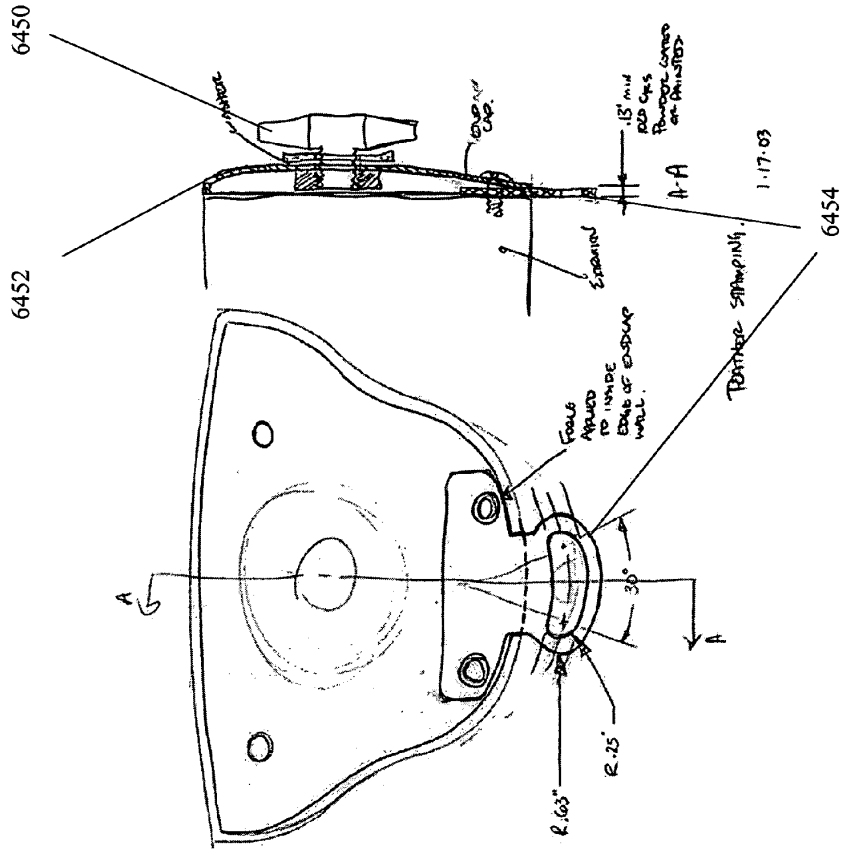

Fig. 64

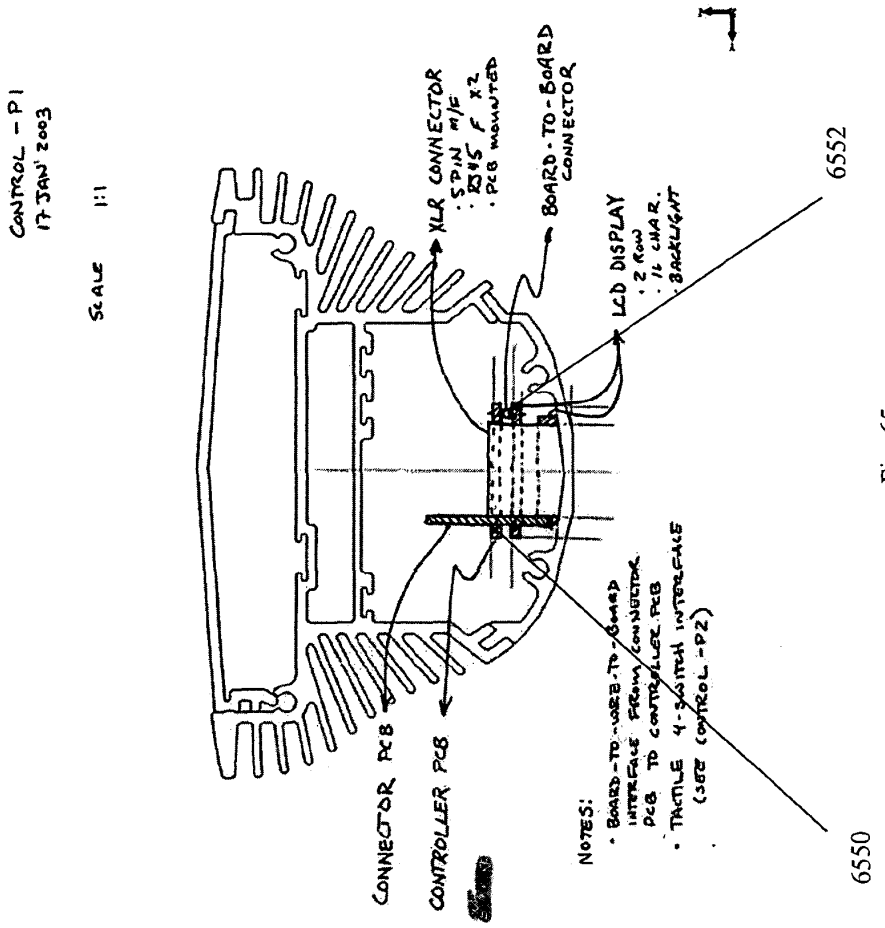
CONTROL - P1
17-JAN-2003
SCALE 1:1
XLR CONNECTOR
· 5 PIN M/F
· BUS F X2
· PCB MOUNTED
BOARD-TO-BOARD CONNECTOR
LCD DISPLAY
· 2 ROW
· 16 CHAR.
· BACKLIGHT
6552
CONNECTOR PCB
CONTROLLER PCB
NOTES:
· BOARD-TO-BOARD INTERFACE FROM CONNECTOR PCB TO CONTROLLER PCB
· TACTILE 4-SWITCH INTERFACE (SEE CONTROL-P2)
6550

Fig. 65

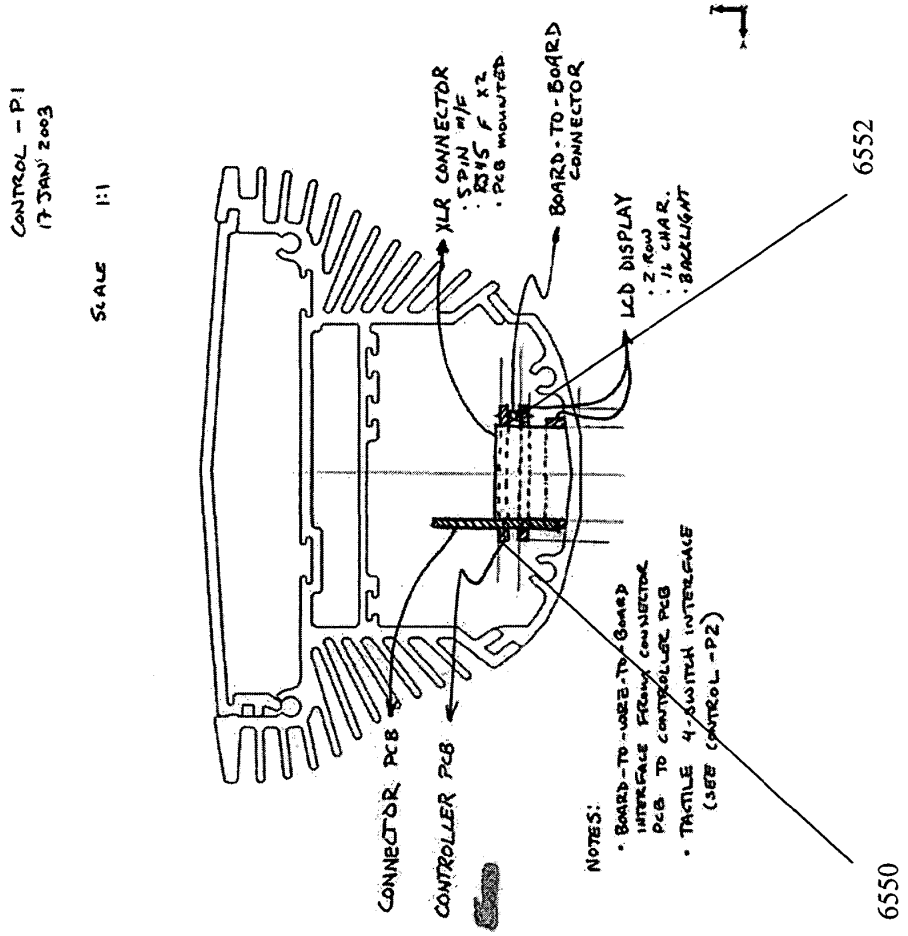
CONTROL - P1
17 JAN 2003
SCALE 1:1
XLR CONNECTOR
· SPIN M/F
· RJ45 F X2
· PCB MOUNTED
BOARD-TO-BOARD CONNECTOR
LCD DISPLAY
· 2 ROW
· 16 CHAR.
· BACKLIGHT
6552
CONNECTOR PCB
CONTROLLER PCB
NOTES:
· BOARD-TO-WRB-TO-BOARD INTERFACE FROM CONNECTOR PCB TO CONTROLLER PCB
· TACTILE 4-SWITCH INTERFACE (SEE CONTROL-P2)
6550

Fig. 66

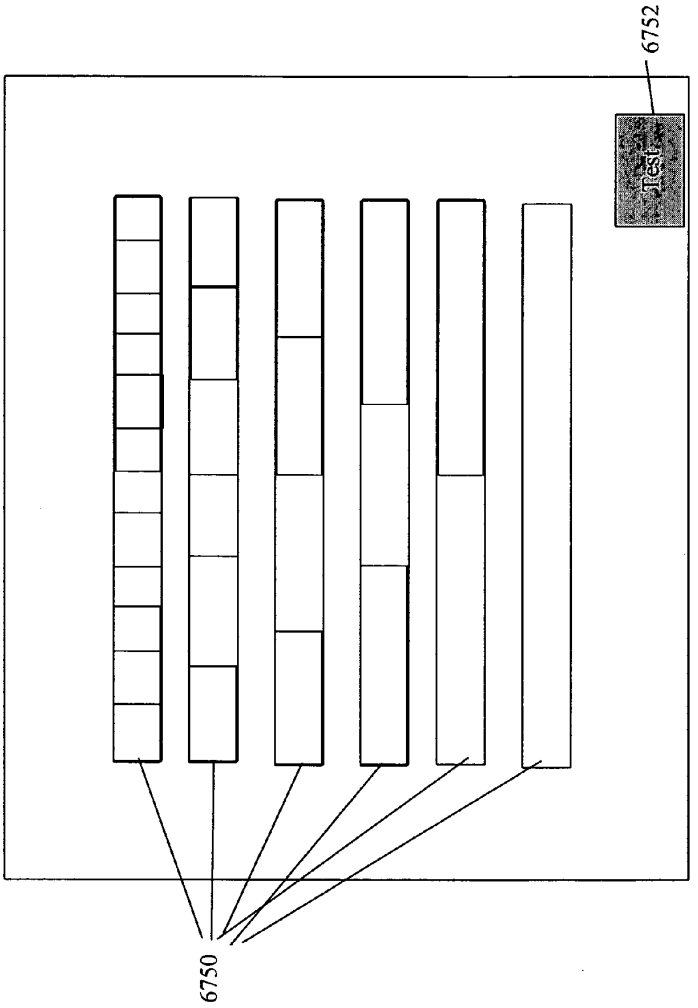

Fig. 67

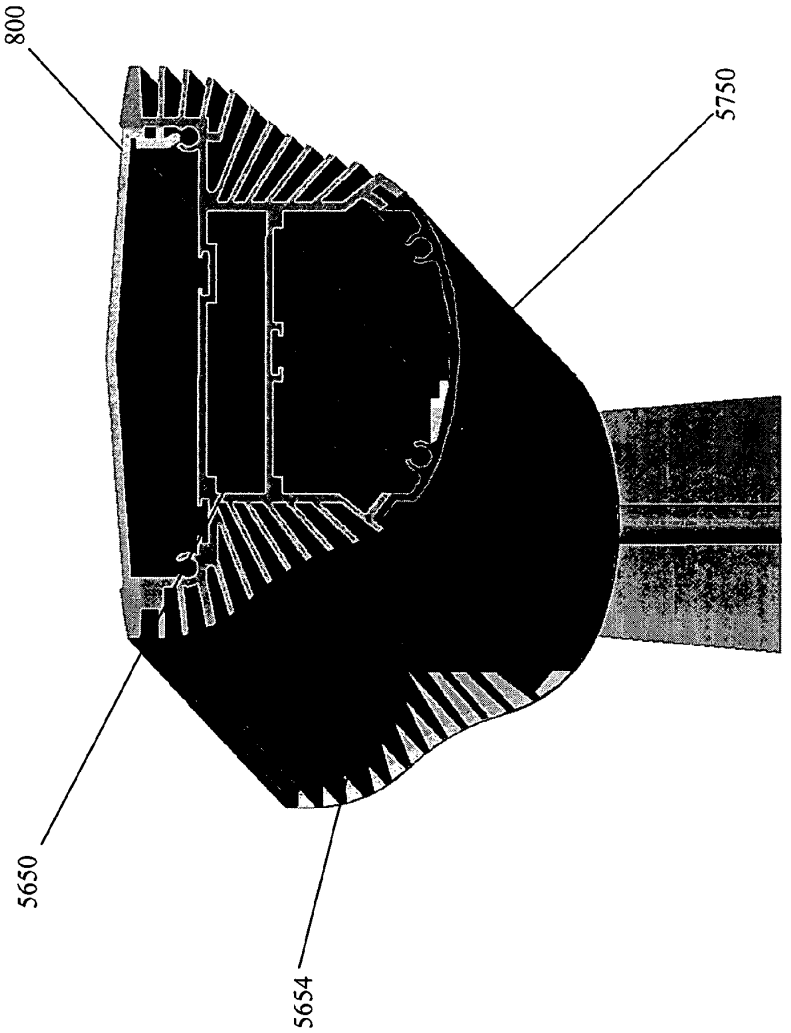

Fig. 68

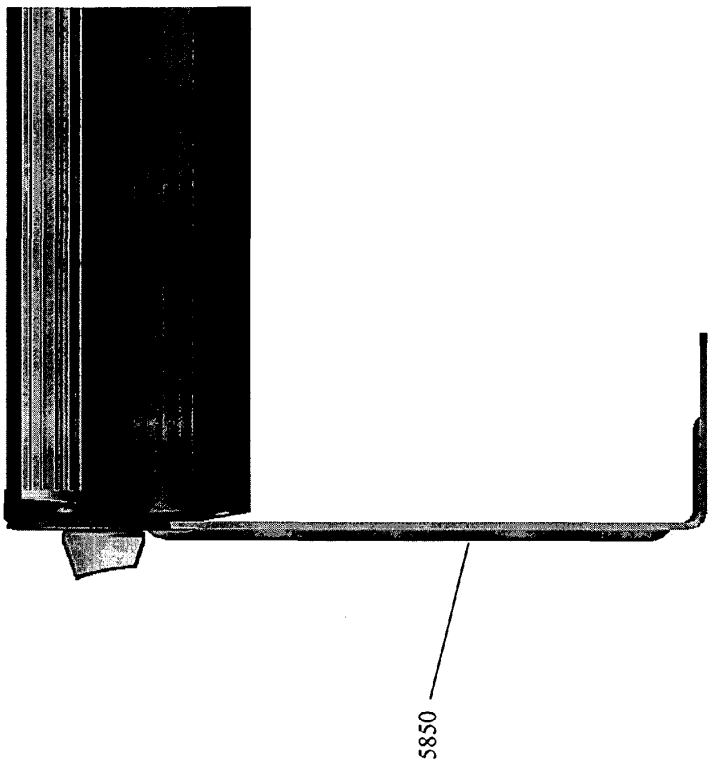

Fig. 69

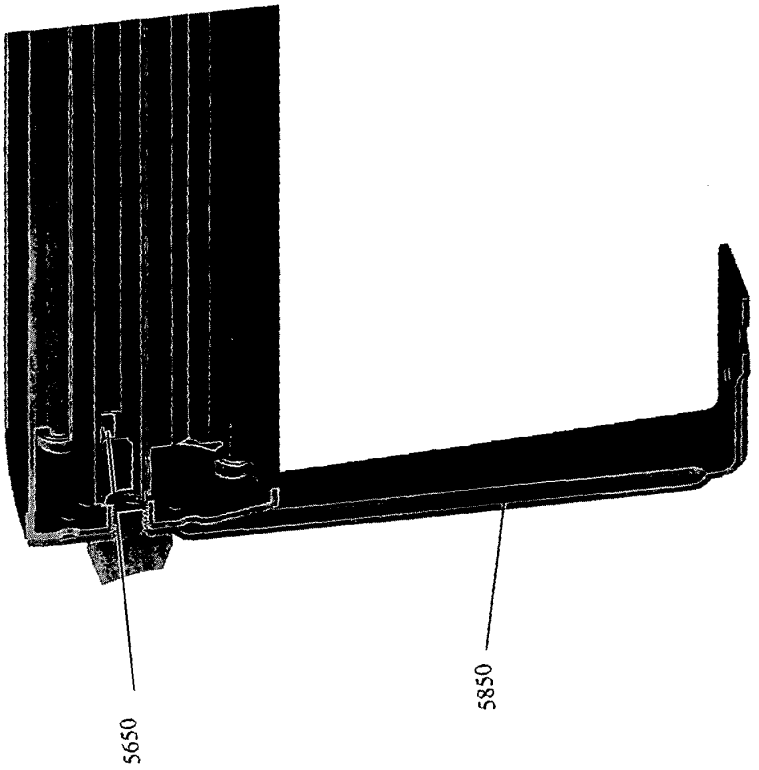

Fig. 70

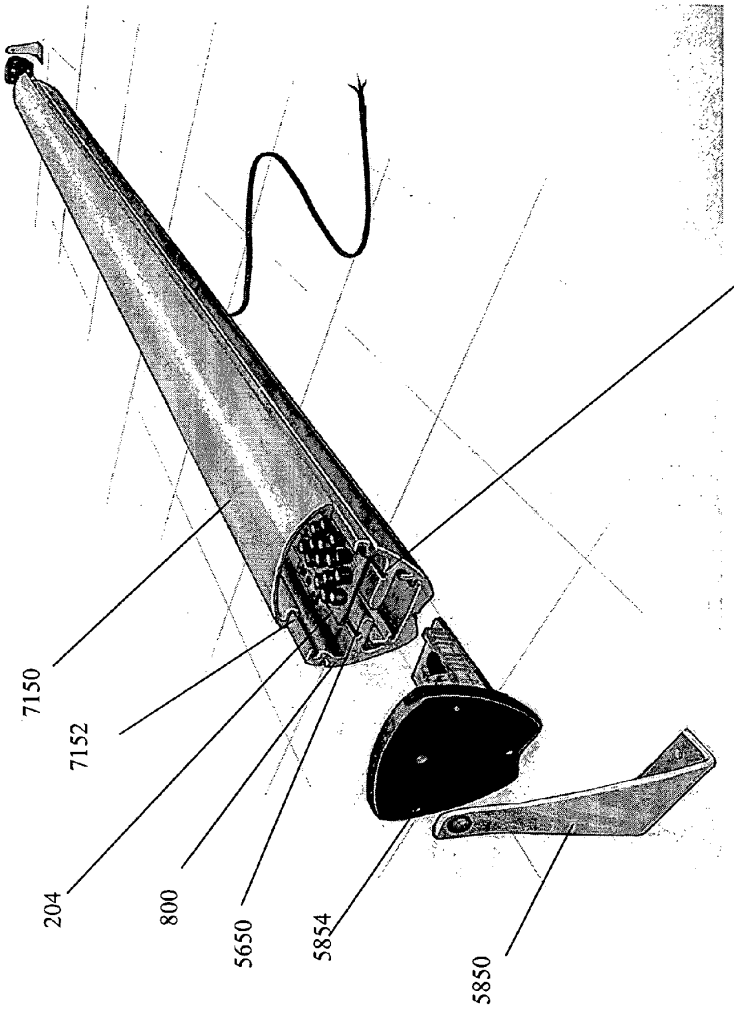

Fig. 71

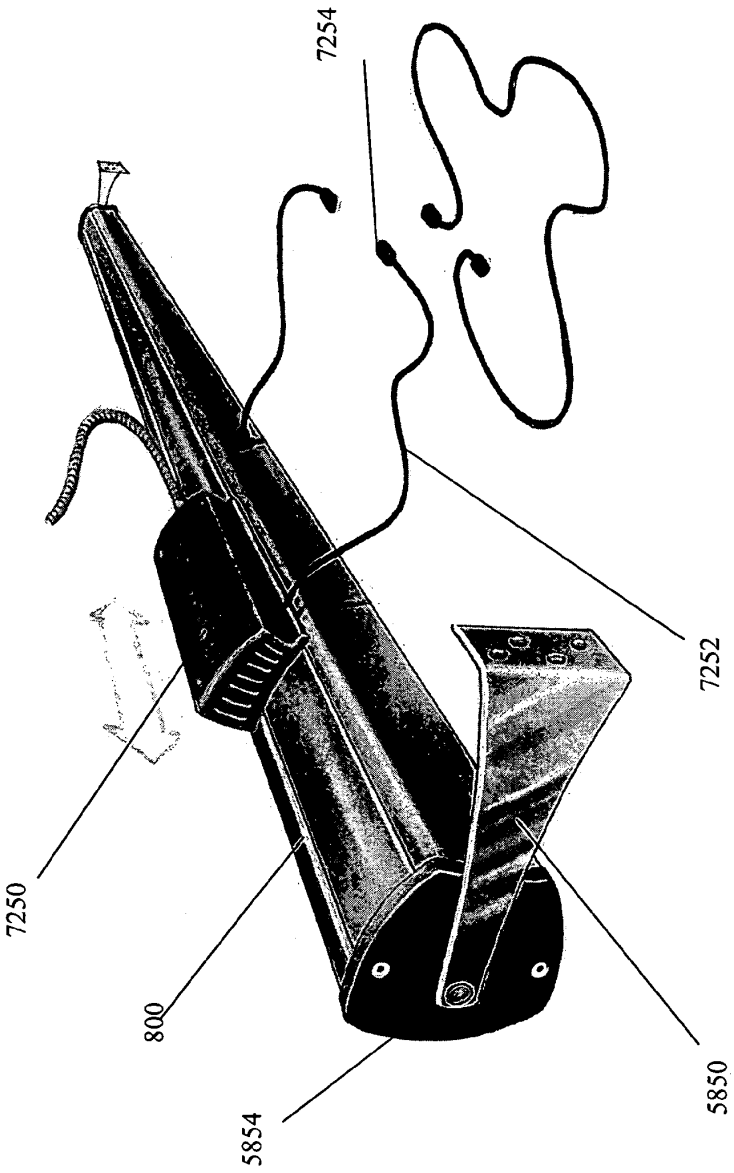

Fig. 72

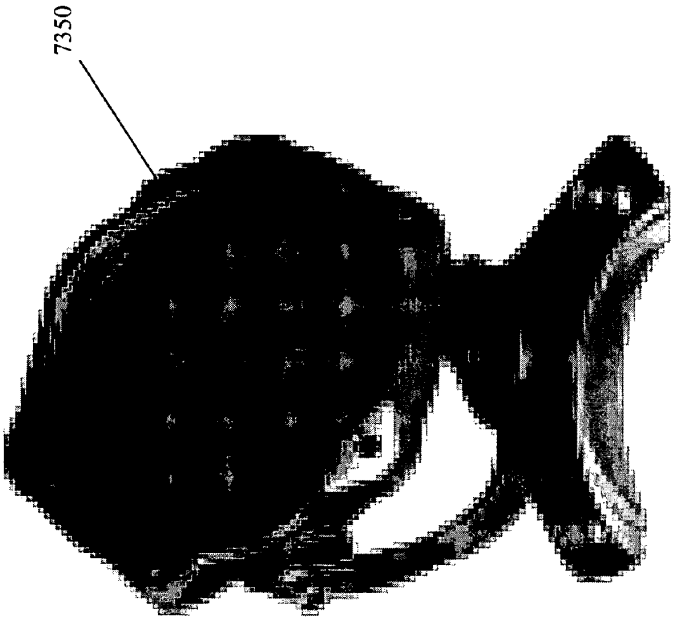

Fig. 73

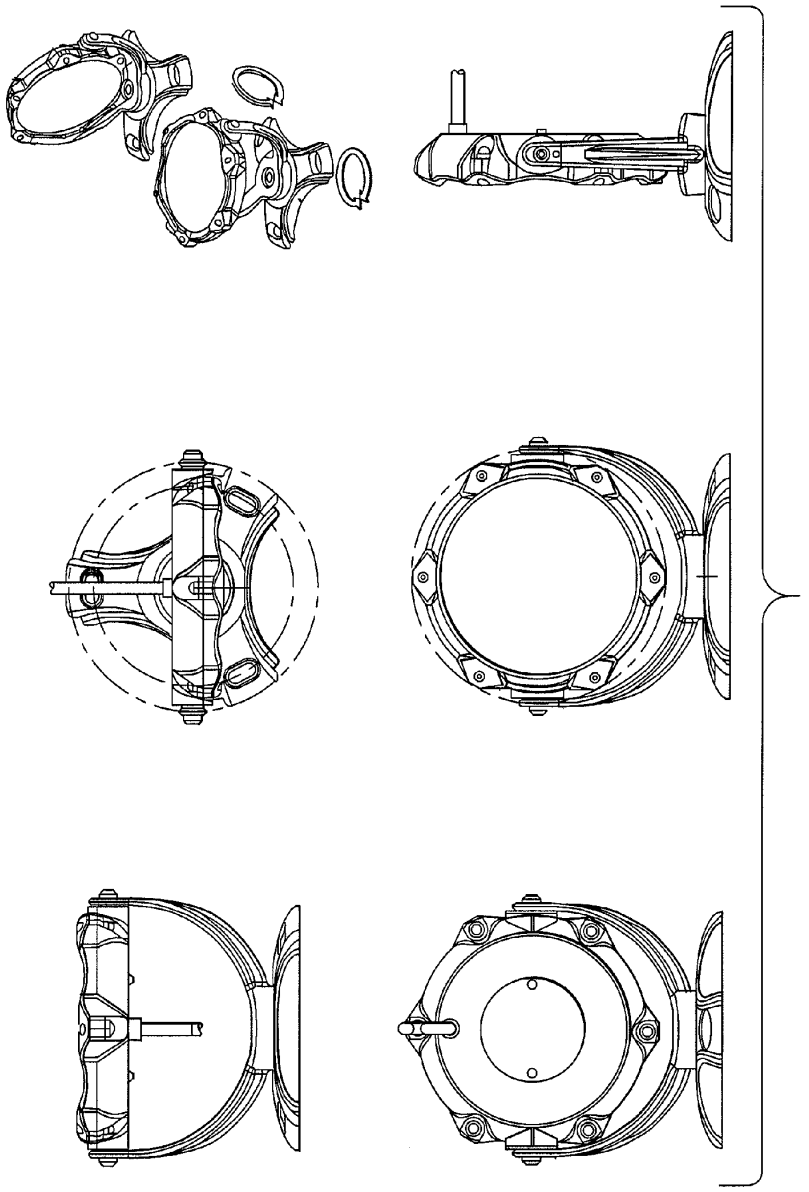

FIG. 74

LIGHTING METHODS AND SYSTEMS

CROSS-REFERENCE TO RELATED APPLICATION

The present application claims the benefit, under 35 U.S.C. §119(e), of U.S. Provisional Application Ser. No. 60/467,847, filed May 5, 2003, entitled "LED SYSTEMS," which application hereby is incorporated herein by reference.

BACKGROUND

LED lighting systems are known that provide illumination and direct view effects. Most LED lighting systems require specialized power supplies that may require specialized installation and maintenance. For example, many LED lighting fixtures require a separate power supply for each fixture, which can be very inconvenient for large scale installations, such as on building exteriors. A need exists for lighting systems that provide the benefits of other LED lighting systems but provide for more convenient installation and maintenance, particularly with respect to power supplies.

SUMMARY

Lighting methods and systems are provided herein, including providing a substantially linear housing holding a circuit board, the circuit board supporting a plurality of LEDs, providing a power facility for providing power to the light sources and providing a channel between the circuit board and the power facility for shielding the light sources from heat produced by the power facility. In embodiments the power facility is a power-factor-corrected power facility. In embodiments the lighting system is an entertainment lighting system, such as a theatrical lighting system. In embodiments the power facility is interior to the housing. In embodiments the power facility is exterior to the housing. In embodiments the power facility is a modular power supply that can be positioned movably on the outside of the housing. The methods and systems provided herein may further include methods and systems for providing a plurality of fins for dissipating heat from the housing, as well as methods and systems for providing a plurality of mounting brackets for positioning the housing on a surface.

Methods and systems disclosed herein include methods and systems for providing a fan for circulating air within the housing to dissipate heat from the light sources and the power facility. In embodiments the methods and systems may include a providing a thermal sensor, wherein the fan operates in response to a temperature condition sensed by the thermal sensor.

Methods and systems disclosed herein include methods and systems for providing a cast bronze housing, providing a circuit board with a plurality of LEDs for providing light from the housing and providing a metal core board for dissipating heat from the light sources. In embodiments the methods and systems may include providing a unified power and data cable to minimize wiring.

It should be appreciated that all combinations of the foregoing concepts and additional concepts discussed in greater detail below are contemplated as being part of the inventive subject matter disclosed herein. In particular, all combinations of claimed subject matter appearing at the end of this disclosure are contemplated as being part of the inventive subject matter disclosed herein.

The following patents and patent applications are hereby incorporated herein by reference:

U.S. Pat. No. 6,016,038, issued Jan. 18, 2000, entitled "Multicolored LED Lighting Method and Apparatus;"

U.S. Pat. No. 6,211,626, issued Apr. 3, 2001 to Lys et al, entitled "Illumination Components,"

U.S. Pat. No. 6,608,453, issued Aug. 19, 2003, entitled "Methods and Apparatus for Controlling Devices in a Networked Lighting System;"

U.S. Pat. No. 6,548,967, issued Apr. 15, 2003, entitled "Universal Lighting Network Methods and Systems;"

U.S. patent application Ser. No. 09/886,958, filed Jun. 21, 2001, entitled Method and Apparatus for Controlling a Lighting System in Response to an Audio Input;"

U.S. patent application Ser. No. 10/078,221, filed Feb. 19, 2002, entitled "Systems and Methods for Programming Illumination Devices;"

U.S. patent application Ser. No. 09/344,699, filed Jun. 25, 1999, entitled "Method for Software Driven Generation of Multiple Simultaneous High Speed Pulse Width Modulated Signals;"

U.S. patent application Ser. No. 09/805,368, filed Mar. 13, 2001, entitled "Light-Emitting Diode Based Products;"

U.S. patent application Ser. No. 09/716,819, filed Nov. 20, 2000, entitled "Systems and Methods for Generating and Modulating Illumination Conditions;"

U.S. patent application Ser. No. 09/675,419, filed Sep. 29, 2000, entitled "Systems and Methods for Calibrating Light Output by Light-Emitting Diodes;"

U.S. patent application Ser. No. 09/870,418, filed May 30, 2001, entitled "A Method and Apparatus for Authoring and Playing Back Lighting Sequences;"

U.S. patent application Ser. No. 10/045,629, filed Oct. 25, 2001, entitled "Methods and Apparatus for Controlling Illumination;"

U.S. patent application Ser. No. 10/158,579, filed May 30, 2002, entitled "Methods and Apparatus for Controlling Devices in a Networked Lighting System;"

U.S. patent application Ser. No. 10/163,085, filed Jun. 5, 2002, entitled "Systems and Methods for Controlling Programmable Lighting Systems;"

U.S. patent application Ser. No. 10/325,635, filed Dec. 19, 2002, entitled "Controlled Lighting Methods and Apparatus;"

U.S. patent application Ser. No. 10/360,594, filed Feb. 6, 2003, entitled "Controlled Lighting Methods and Apparatus; and"

U.S. patent application Ser. No. 10/435,687, filed May 9, 2003, entitled "Methods and Apparatus for Providing Power to Lighting Devices."

BRIEF DESCRIPTION OF THE FIGURES

FIG. **1** depicts a configuration for a controlled lighting system.

FIG. **2** is a schematic diagram with elements for a lighting system.

FIG. **3** depicts configurations of light sources that can be used in a lighting system.

FIG. **4** depicts an optical facility for a lighting system.

FIG. **5** depicts diffusers that can serve as optical facilities.

FIG. **6** depicts optical facilities.

FIG. **7** depicts optical facilities for lighting systems.

FIG. **8** depicts a tile light housing for a lighting system.

FIG. **9** depicts housings for architectural lighting systems.

FIG. **10** depicts specialized housings for lighting systems.

FIG. **11** depicts housings for lighting systems.

FIG. **12** depicts a signage housing for a lighting system.

FIG. **13** depicts a housing for a retrofit lighting unit.

FIGS. **14***a* and **14***b* depict housings for a linear fixture.

FIG. **15** depicts a power circuit for a lighting system with power factor correction.

FIG. **16** depicts another embodiment of a power factor correction power system.

FIG. **17** depicts another embodiment of a power system for a lighting system that includes power factor correction.

FIG. **18** depicts drive hardware for a lighting system.

FIG. **19** depicts thermal facilities for a lighting system.

FIG. **20** depicts mechanical interfaces for lighting systems.

FIG. **21** depicts additional mechanical interfaces for lighting systems.

FIG. **22** depicts additional mechanical interfaces for a lighting system.

FIG. **23** depicts a mechanical interface for connecting two linear lighting units.

FIG. **24** depicts drive hardware for a lighting system.

FIG. **25** depicts methods for driving lighting systems.

FIG. **26** depicts a chromaticity diagram for a lighting system.

FIG. **27** depicts a configuration for a light system manager.

FIG. **28** depicts a configuration for a networked lighting system.

FIG. **29** depicts an XML parser environment for a lighting system.

FIG. **30** depicts a network with a central control facility for a lighting system.

FIG. **31** depicts network topologies for lighting systems.

FIG. **32** depicts a physical data interface for a lighting system with a communication port.

FIG. **33** depicts physical data interfaces for lighting systems.

FIG. **34** depicts user interfaces for lighting systems.

FIG. **35** depicts additional user interfaces for lighting systems.

FIG. **36** depicts a keypad user interface.

FIG. **37** depicts a configuration file for mapping locations of lighting systems.

FIG. **38** depicts a binary tree for a method of addressing lighting units.

FIG. **39** depicts a flow diagram for mapping locations of lighting units.

FIG. **40** depicts steps for mapping lighting units.

FIG. **41** depicts a method for mapping and grouping lighting systems for purposes of authoring shows.

FIG. **42** depicts a graphical user interface for authoring lighting shows.

FIG. **43** depicts a user interface screen for an authoring facility.

FIG. **44** depicts effects and meta effects for a lighting show.

FIG. **45** depicts steps for converting an animation into a set of lighting control signals.

FIG. **46** depicts steps for associating lighting control signals with other object-oriented programs.

FIG. **47** depicts parameters for effects.

FIG. **48** depicts effects that can be created using lighting systems.

FIG. **49** depicts additional effects.

FIG. **50** depicts additional effects.

FIG. **51** depicts environments for lighting systems.

FIG. **52** depicts additional environments for lighting systems.

FIG. **53** depicts additional environments for lighting systems.

FIG. **54** depicts additional environments for lighting systems.

FIG. **55** depicts additional environments for lighting systems.

FIG. **56** depicts a board disposed in the interior of a linear housing for a lighting system.

FIG. **57** depicts a cover for the extruded housing of FIG. **56**.

FIG. **58** depicts a bracket mechanism for a lighting system.

FIG. **59** depicts an end plate for a housing for a lighting system.

FIG. **60** depicts amounting system for a lighting system.

FIG. **61** depicts a bracket mounting system for a lighting system.

FIG. **62** depicts an interior structure for a linear lighting system.

FIG. **63** is a schematic diagram for the parts of a linear lighting system.

FIG. **64** shows a structure for a housing for a lighting system.

FIG. **65** shows connectors for a control facility for a lighting system.

FIG. **66** shows additional details of connectors for a control facility for a lighting system.

FIG. **67** shows a schematic diagram of a control facility for a lighting system.

FIG. **68** shows an extruded housing for a lighting system.

FIG. **69** shows a mounting system for a lighting system.

FIG. **70** shows a mounting system for a lighting system.

FIG. **71** shows components of a linear lighting system.

FIG. **72** shows a linear lighting system with a modular power supply.

FIG. **73** shows an underwater lighting fixture.

FIG. **74** shows different views of the underwater lighting fixture of FIG. **73**.

DETAILED DESCRIPTION

Referring to FIG. **1**, in a lighting system **100** a lighting unit **102** is controlled by a control facility **3500**. In embodiments, the control facility **3500** controls the intensity, color, saturation, color temperature, on-off state, brightness, or other feature of light that is produced by the lighting unit **102**. The lighting unit **102** can draw power from a power facility **1800**. The lighting unit **102** can include a light source **300**, which in embodiments is a solid-state light source, such as a semiconductor-based light source, such as light emitting diode, or LED.

Referring to FIG. **2**, the system **100** can be a solid-state lighting system and can include the lighting unit **102** as well as a wide variety of optional control facilities **3500**.

In embodiments, the system **100** may include an electrical facility **202** for powering and controlling electrical input to the light sources **300**, which may include drive hardware **3802**, such as circuits and similar elements, and the power facility **1800**.

In embodiments the system can include a mechanical interface **3200** that allows the lighting unit **102** to mechanically connect to other portions of the system **100**, or to external components, products, lighting units, housings, systems, hardware, or other items.

The lighting unit **102** may have a primary optical facility **1700**, such as a lens, mirror, or other optical facility for

shaping beams of light that exit the light source, such as photons exiting the semiconductor in an LED package.

The system **100** may include an optional secondary optical facility **400**, which may diffuse, spread, focus, filter, diffract, reflect, guide or otherwise affect light coming from a light source **300**. The secondary optical facility **400** may include one or many elements.

In embodiments, the light sources **300** may be disposed on a support structure, such as a board **204**. The board **204** may be a circuit board or similar facility suitable for holding light sources **300** as well as electrical components, such as components used in the electrical facility **202**.

In embodiments the system **100** may include a thermal facility **2500**, such as a heat-conductive plate, metal plate, gap pad, liquid heat-conducting material, potting facility, fan, vent, or other facility for removing heat from the light sources **300**.

The system **100** may optionally include a housing **800**, which in embodiments may hold the board **204**, the electrical facility **202**, the mechanical interface **3200**, and the thermal facility **2500**. In some embodiments, no housing **800** is present.

In embodiments the system **100** is a standalone system with an on-board control facility **3500**. The system **100** can include a processor **3600** for processing data to accept control instructions and to control the drive hardware **3802**.

In embodiments the system **100** can respond to control of a user interface **4908**, which may provide control directly to the lighting unit **102**, such as through a switch, dial, button, dipswitch, slide mechanism, or similar facility or may provide control through another facility, such as a network interface **4902**, a light system manager **5000**, or other facility.

The system **100** can include a data storage facility **3700**, such as memory. In a standalone embodiment the data storage facility **3700** may be memory, such as random access memory. In other embodiments the data storage facility **3700** may include any other facility for storing and retrieving data.

The system **100** can produce effects **9200**, such as illumination effects **9300** that illuminate a subject **9900** and direct view effects **9400** where the viewer is intended to view the light sources **300** or the secondary optical facility **400** directly, in contrast to viewing the illumination produced by the light sources **300**, as in illumination effects **9300**. Effects can be static and dynamic, including changes in color, color-temperature, intensity, hue, saturation and other features of the light produced by the light sources **300**. Effects from lighting units **102** can be coordinated with effects from other systems, including other lighting units **102**.

The system **100** can be disposed in a wide variety of environments **9600**, where effects **9200** interact with aspects of the environments **9600**, such as subjects **9900**, objects, features, materials, systems, colors or other characteristics of the environments. Environments **9600** can include interior and exterior environments, architectural and entertainment environments, underwater environments, commercial environment, industrial environments, recreational environments, home environments, transportation environments and many others.

Subjects **9900** can include a wide range of subjects **9900**, ranging from objects such as walls, floors and ceilings to alcoves, pools, spas, fountains, curtains, people, signs, logos, buildings, rooms, objects of art and photographic subjects, among many others.

While embodiments of a control facility **3500** may be as simple as a single processor **3600**, data storage facility **3700** and drive hardware **3802**, in other embodiments more complex control facilities **3500** are provided. Control facilities may include more complex drive facilities **3800**, including various forms of drive hardware **3802**, such as switches, current sinks, voltage regulators, and complex circuits, as well as various methods of driving **4300**, including modulation techniques such as pulse-width-modulation, pulse-amplitude-modulation, combined modulation techniques, table-based modulation techniques, analog modulation techniques, and constant current techniques. In embodiments a control facility **3500** may include a combined power/data protocol **4800** for controlling light sources **300** in response to data delivered over power lines.

A control facility **3500** may include a control interface **4900**, which may include a physical interface **4904** for delivering data to the lighting unit **102**. The control interface **4900** may also include a computer facility, such as a light system manager **5000** for managing the delivery of control signals, such as for complex shows and effects **9200** to lighting units **102**, including large numbers of lighting units **102** deployed in complex geometric configurations over large distances.

The control interface **4900** may include a network interface **4902**, such as for handling network signals according to any desired network protocol, such as DMX, Ethernet, TCP/IP, DALI, 802.11 and other wireless protocols, and linear addressing protocols, among many others. In embodiments the network interface **4902** may support multiple protocols for the same lighting unit **102**.

In embodiments involving complex control, the physical data interface **4904** may include suitable hardware for handling data transmissions, such as USB ports, serial ports, Ethernet facilities, wires, routers, switches, hubs, access points, buses, multi-function ports, intelligent sockets, intelligent cables, flash and USB memory devices, file players, and other facilities for handling data transfers.

In embodiments the control facility **3500** may include an addressing facility **6600**, such as for providing an identifier or address to one or more lighting units **102**. Many kinds of addressing facility **6600** may be used, including facilities for providing network addresses, dipswitches, bar codes, sensors, cameras, and many others.

In embodiments the control facility **3500** may include an authoring facility **7400** for authoring effects **9200**, including complex shows, static and dynamic effects. The authoring facility **7400** may be associated with the light system manager **5000**, such as to facilitate delivery of control signals for complex shows and effects over a network interface **4900** to one or more lighting units **102**. The authoring facility **7400** may include a geometric authoring facility, an interface for designing light shows, an object-oriented authoring facility, an animation facility, or any of a variety of other facilities for authoring shows and effects.

In embodiments the control facility **3500** may take input from a signal sources **8400**, such as a sensor **8402**, an information source, a light system manager **5000**, a user interface **4908**, a network interface **4900**, a physical data interface **4904**, an external system **8800**, or any other source capable of producing a signal.

In embodiments the control facility **3500** may respond to an external system **8800**. The external system **8800** may be a computer system, an automation system, a security system, an entertainment system, an audio system, a video system, a personal computer, a laptop computer, a handheld computer, or any of a wide variety of other systems that are capable of generating control signals.

Referring to FIG. **3**, the lighting unit **102** may be any kind of lighting unit **102** that is capable of responding to control, but in embodiments the lighting unit **102** includes a light source **300** that is a solid-state light source, such as a semiconductor-based light source, such as a light emitting diode, or LED. Lighting units **102** can include LEDs that produce a single color or wavelength of light, or LEDs that produce different colors or wavelengths, including red, green, blue, white, orange, amber, ultraviolet, infrared, purple or any other wavelength of light. Lighting units **102** can include other light sources, such as organic LEDS, or OLEDs, light emitting polymers, crystallo-luminescent lighting units, lighting units that employ phosphors, luminescent polymers and other sources. In other embodiments, lighting units **102** may include incandescent sources, halogen sources, metal halide sources, fluorescent sources, compact fluorescent sources and others.

Referring still to FIG. **3**, the sources **300** can be point sources or can be arranged in many different configurations **302**, such as a linear configuration **306**, a circular configuration **308**, an oval configuration **304**, a curvilinear configuration, or any other geometric configuration, including two-dimensional and three-dimensional configurations. The sources **300** can also be mixed, including sources **300** of varying wavelength, intensity, power, quality, light output, efficiency, efficacy or other characteristics. In embodiments sources **300** for different lighting units **102** are consistently mixed to provide consistent light output for different lighting units **102**. In embodiments the sources are mixed **300** to allow light of different colors or color temperatures, including color temperatures of white. Various mixtures of sources **300** can produce substantially white light, such as mixtures of red, green and blue LEDs, single white sources **300**, two white sources of varying characteristics, three white sources of varying characteristics, or four or more white sources of varying characteristics. One or more white source can be mixed with, for example, an amber or red source to provide a warm white light or with a blue source to produce a cool white light.

Sources **300** may be constructed and arranged to produce a wide range of variable color radiation. For example, the source **300** may be particularly arranged such that the processor-controlled variable intensity light generated by two or more of the light sources combines to produce a mixed colored light (including essentially white light having a variety of color temperatures). In particular, the color (or color temperature) of the mixed colored light may be varied by varying one or more of the respective intensities of the light sources or the apparent intensities, such as using a duty cycle in a pulse width modulation technique. Combinations of LEDs with other mechanisms that affect light characteristics, such as phosphors, are also encompassed herein.

Any combination of LED colors can produce a gamut of colors, whether the LEDs are red, green, blue, amber, white, orange, UV, or other colors. The various embodiments described throughout this specification encompass all possible combinations of LEDs in lighting units **102**, so that light of varying color, intensity, saturation and color temperature can be produced on demand under control of a control facility **3500**.

Although mixtures of red, green and blue have been proposed for light due to their ability to create a wide gamut of additively mixed colors, the general color quality or color rendering capability of such systems are not ideal for all applications. This is primarily due to the narrow bandwidth of current red, green and blue emitters. However, wider band sources do make possible good color rendering, as measured, for example, by the standard CRI index. In some cases this may require LED spectral outputs that are not currently available. However, it is known that wider-band sources of light will become available, and such wider-band sources are encompassed as sources for lighting units **102** described herein.

Additionally, the addition of white LEDs (typically produced through a blue or UV LED plus a phosphor mechanism) does give a 'better' white, but it still can be limiting in the color temperature that is controllable or selectable from such sources.

The addition of white to a red, green and blue mixture may not increase the gamut of available colors, but it can add a broader-band source to the mixture. The addition of an amber source to this mixture can improve the color still further by 'filling in' the gamut as well.

Combinations of light sources **300** can help fill in the visible spectrum to faithfully reproduce desirable spectrums of lights. These include broad daylight equivalents or more discrete waveforms corresponding to other light sources or desirable light properties. Desirable properties include the ability to remove pieces of the spectrum for reasons that may include environments where certain wavelengths are absorbed or attenuated. Water, for example tends to absorb and attenuate most non-blue and non-green colors of light, so underwater applications may benefit from lights that combine blue and green sources **300**.

Amber and white light sources can offer a color temperature selectable white source, wherein the color temperature of generated light can be selected along the black body curve by a line joining the chromaticity coordinates of the two sources. The color temperature selection is useful for specifying particular color temperature values for the lighting source.

Orange is another color whose spectral properties in combination with a white LED-based light source can be used to provide a controllable color temperature light from a lighting unit **102**.

As used herein for purposes of the present disclosure, the term "LED" should be understood to include any light emitting diode or other type of carrier injection/junction-based system that is capable of generating radiation in response to an electric signal. Thus, the term LED includes, but is not limited to, various semiconductor-based structures that emit light in response to current, light emitting polymers, light-emitting strips, electro-luminescent strips, and the like.

In particular, the term LED refers to light emitting diodes of all types (including semi-conductor and organic light emitting diodes) that may be configured to generate radiation in one or more of the infrared spectrum, ultraviolet spectrum, and various portions of the visible spectrum (generally including radiation wavelengths from approximately 400 nanometers to approximately 700 nanometers). Some examples of LEDs include, but are not limited to, various types of infrared LEDs, ultraviolet LEDs, red LEDs, blue LEDs, green LEDs, yellow LEDs, amber LEDs, orange LEDs, and white LEDs (discussed further below). It also should be appreciated that LEDs may be configured to generate radiation having various bandwidths for a given spectrum (e.g., narrow bandwidth, broad bandwidth).

For example, one implementation of an LED configured to generate essentially white light (e.g., a white LED) may include a number of dies which respectively emit different spectrums of luminescence that, in combination, mix to form essentially white light. In another implementation, a white light LED may be associated with a phosphor material that

converts luminescence having a first spectrum to a different second spectrum. In one example of this implementation, luminescence having a relatively short wavelength and narrow bandwidth spectrum "pumps" the phosphor material, which in turn radiates longer wavelength radiation having a somewhat broader spectrum.

It should also be understood that the term LED does not limit the physical and/or electrical package type of an LED. For example, as discussed above, an LED may refer to a single light emitting device having multiple dies that are configured to respectively emit different spectrums of radiation (e.g., that may or may not be individually controllable). Also, an LED may be associated with a phosphor that is considered as an integral part of the LED (e.g., some types of white LEDs). In general, the term LED may refer to packaged LEDs, non-packaged LEDs, surface mount LEDs, chip-on-board LEDs, radial package LEDs, power package LEDs, LEDs including some type of encasement and/or optical element (e.g., a diffusing lens), etc.

The term "light source" should be understood to refer to any one or more of a variety of radiation sources, including, but not limited to, LED-based sources as defined above, incandescent sources (e.g., filament lamps, halogen lamps), fluorescent sources, phosphorescent sources, high-intensity discharge sources (e.g., sodium vapor, mercury vapor, and metal halide lamps), lasers, other types of luminescent sources, electro-lumiscent sources, pyro-luminescent sources (e.g., flames), candle-luminescent sources (e.g., gas mantles, carbon arc radiation sources), photo-luminescent sources (e.g., gaseous discharge sources), cathode luminescent sources using electronic satiation, galvano-luminescent sources, crystallo-luminescent sources, kine-luminescent sources, thermo-luminescent sources, triboluminescent sources, sonoluminescent sources, radioluminescent sources, and luminescent polymers.

A given light source may be configured to generate electromagnetic radiation within the visible spectrum, outside the visible spectrum, or a combination of both. Hence, the terms "light" and "radiation" are used interchangeably herein. Additionally, a light source may include as an integral component one or more filters (e.g., color filters), lenses, or other optical components. Also, it should be understood that light sources may be configured for a variety of applications, including, but not limited to, indication and/or illumination. An "illumination source" is a light source that is particularly configured to generate radiation having a sufficient intensity to effectively illuminate an interior or exterior space.

The term "spectrum" should be understood to refer to any one or more frequencies (or wavelengths) of radiation produced by one or more light sources. Accordingly, the term "spectrum" refers to frequencies (or wavelengths) not only in the visible range, but also frequencies (or wavelengths) in the infrared, ultraviolet, and other areas of the overall electromagnetic spectrum. Also, a given spectrum may have a relatively narrow bandwidth (essentially few frequency or wavelength components) or a relatively wide bandwidth (several frequency or wavelength components having various relative strengths). It should also be appreciated that a given spectrum may be the result of a mixing of two or more other spectrums (e.g., mixing radiation respectively emitted from multiple light sources).

For purposes of this disclosure, the term "color" is used interchangeably with the term "spectrum." However, the term "color" generally is used to refer primarily to a property of radiation that is perceivable by an observer (although this usage is not intended to limit the scope of this term). Accordingly, the terms "different colors" implicitly refer to different spectrums having different wavelength components and/or bandwidths. It also should be appreciated that the term "color" may be used in connection with both white and non-white light.

The term "color temperature" generally is used herein in connection with white light, although this usage is not intended to limit the scope of this term. Color temperature essentially refers to a particular color content or shade (e.g., reddish, bluish) of white light. The color temperature of a given radiation sample conventionally is characterized according to the temperature in degrees Kelvin (K) of a black body radiator that radiates essentially the same spectrum as the radiation sample in question. The color temperature of white light generally falls within a range of from approximately 700 degrees K (generally considered the first visible to the human eye) to over 10,000 degrees K.

Lower color temperatures generally indicate white light having a more significant red component or a "warmer feel," while higher color temperatures generally indicate white light having a more significant blue component or a "cooler feel." By way of example, a wood burning fire has a color temperature of approximately 1,800 degrees K, a conventional incandescent bulb has a color temperature of approximately 2848 degrees K, early morning daylight has a color temperature of approximately 3,000 degrees K, and overcast midday skies have a color temperature of approximately 10,000 degrees K. A color image viewed under white light having a color temperature of approximately 3,000 degree K has a relatively reddish tone, whereas the same color image viewed under white light having a color temperature of approximately 10,000 degrees K has a relatively bluish tone.

Illuminators may be selected so as to produce a desired level of output, such as a desired total number of lumens of output, such as to make a lighting unit **102** consistent with or comparable to another lighting unit **102**, which might be a semiconductor illuminator or might be another type of lighting unit, such as an incandescent, fluorescent, halogen or other light source, such as if a designer or architect wishes to fit semiconductor-based lighting units **102** into installations that use such traditional units.

The number and type of semiconductor illuminators can be selected to produce the desired lumens of output, such as by selecting some number of one-watt, five-watt, power package or other LEDs. In embodiments two or three LEDs are chosen. In other embodiments any number of LEDs, such as six, nine, twenty, thirty, fifty, one hundred, three hundred or more LEDs can be chosen.

Referring to FIG. **4**, a system **100** can include a secondary optical facility **400** to optically process the radiation generated by the light sources **300**, such as to change one or both of a spatial distribution and a propagation direction of the generated radiation. In particular, one or more optical facilities may be configured to change a diffusion angle of the generated radiation. One or more optical facilities **400** may be particularly configured to variably change one or both of a spatial distribution and a propagation direction of the generated radiation (e.g., in response to some electrical and/or mechanical stimulus). An actuator **404**, such as under control of a control facility **3500**, can control an optical facility **400** to produce different optical effects.

Referring to FIG. **5**, an optical facility **400** may be a diffuser **502**. A diffuser may absorb and scatter light from a source **300**, such as to produce a glowing effect in the diffuser. As seen in FIG. **5**, diffusers **502** can take many different shapes, such as tubes, cylinders, spheres, pyramids, cubes, tiles, panels, screens, doughnut shapes, V-shapes,

T-shapes, U-shapes, junctions, connectors, linear shapes, curves, circles, squares, rectangles, geometric solids, irregular shapes, shapes that resemble objects found in nature, and any other shape. Diffusers may be made of plastics, polymers, hydrocarbons, coated materials, glass materials, crystals, micro-lens arrays, fiber optics, or a wide range of other materials. Diffusers **502** can scatter light to provide more diffuse illumination of other objects, such as walls or alcoves. Diffusers **502** can also produce a glowing effect when viewed directly by a viewer. In embodiments, it may be desirable to deliver light evenly to the interior surface of a diffuser **502**. For example, a reflector **600** may be disposed under a diffuser **502** to reflect light to the interior surface of the diffuser **502** to provide even illumination.

Diffusing material can be a substantially light-transmissive material, such as a fluid, gel, polymer, gas, liquid, vapor, solid, crystal, fiber optic material, or other material. In embodiments the material may be a flexible material, so that the diffuser may be made flexible. The diffuser may be made of a flexible material or a rigid material, such as a plastic, rubber, a crystal, PVC, glass, a polymer, a metal, an alloy or other material.

Referring to FIG. **6**, an optical facility **400** may include a reflector **600** for reflecting light from a light source **300**. Embodiments include a paraboloic reflector **612** for reflecting light from many angles onto an object, such as an object to be viewed in a machine vision system. Other reflectors **600** include mirrors, spinning mirrors **614**, reflective lenses, and the like. In some cases, the optical facility **400** may operate under control of a processor **3600**. Optical facilities **500** can also include lenses **402**, including microlens arrays that can be disposed on a flexible material.

Other examples of optical facilities **400** include, but are not limited to, reflectors, lenses, reflective materials, refractive materials, translucent materials, filters, mirrors, spinning mirrors, dielectric mirrors, Bragg cells, MEMs, acousto-optic modulators, crystals, gratings and fiber optics. The optical facility **400** also may include a phosphorescent material, luminescent material, or other material capable of responding to or interacting with the generated radiation.

Variable optics can provide discrete or continuous adjustment of beam spread or angle or simply the profile of the light beam emitted from a fixture. Properties can include, but are not limited to, adjusting the profile for surfaces that vary in distance from the fixture, such as wall washing fixtures. In various embodiments, the variable nature of the optic can be manually adjusted, adjusted by motion control or automatically be controlled dynamically.

Referring to FIG. **7**, actuation of variable optics can be through any kind of actuator, such as an electric motor, piezoelectric device, thermal actuator, motor, gyro, servo, lever, gear, gear system, screw drive, drive mechanism, flywheel, wheel, or one of many well-known techniques for motion control. Manual control can be through an adjustment mechanism that varies the relative geometry of lens, diffusion materials, reflecting surfaces or refracting elements. The adjustment mechanism may use a sliding element, a lever, screws, or other simple mechanical devices or combinations of simple mechanical devices. A manual adjustment or motion control adjustment may allow the flexing of optical surfaces to bend and shape the light passed through the system or reflected or refracted by the optical system.

Actuation can also be through an electromagnetic motor or one of many actuation materials and devices. Optical facilities **400** can also include other actuators, such as piezo-electric devices, MEMS devices, thermal actuators, processors, and many other forms of actuators.

A wide range of optical facilities **400** can be used to control light. Such devices as Bragg cells or holographic films can be used as optical facilities **400** to vary the output of a fixture. A Bragg cell or acoustic-optic modulator can provide for the movement of light with no other moving mechanisms. The combination of controlling the color (hue, saturation and value) as well as the form of the light beam brings a tremendous amount of operative control to a light source. The use of polarizing films can be used to reduce glare and allow the illumination and viewing of objects that present specular surfaces, which typically are difficult to view. Moving lenses and shaped non-imaging surfaces can provide optical paths to guide and shape light.

In other embodiments, fluid-filled surfaces **428** and shapes can be manipulated to provide an optical path. In combination with lighting units, such shapes can provide varying optical properties across the surface and volume of the fluid-filled material. The fluid-filled material can also provide a thermal dissipation mechanism for the light-emitting elements. The fluid can be water, polymers, silicone or other transparent or translucent liquid or a gas of any type and mixture with desirable optical or thermal properties.

In other embodiments, gelled, filled shapes can be used in conjunction with light sources to evenly illuminate said shapes. Light propagation and diffusion is accomplished through the scattering of light through the shape.

In other embodiments, spinning mirror systems such as those used in laser optics for scanning (E.g. bar code scanners or 3D terrain scanners) can be used to direct and move a beam of light. That combined with the ability to rapidly turn on and off a lighting unit **102** can allow a beam of light to be spread across a larger area and change colors to 'draw' shapes of varying patterns. Other optical facilities **400** for deflecting and changing light patterns are known and described in the literature. They include methods for beam steering, such as mechanical mirrors, driven by stepper or galvanometer motors and more complex robotic mechanisms for producing sophisticated temporal effects or static control of both color (HS&V) and intensity. Optical facilities **400** also include acousto-optic modulators that use sound waves generated via piezoelectrics to control and steer a light beam. They also include digital mirror devices and digital light processors, such as available from Texas Instruments. They also include grating light valve technology (GLV), as well as inorganic digital light deflection. They also include dielectric mirrors, such as developed at Massachusetts Institute of Technology.

Control of form and texture of the light can include not only control of the shape of the beam but also control of the way in which the light is patterned across its beam. An example of a use of this technology may be in visual merchandising, where product 'spotlights' could be created while other media is playing in a coordinated manner. Voice-overs or music-overs or even video can be played during the point at which a product is highlighted during a presentation. Lights that move and 'dance' can be used in combination with A/V sources for visual merchandising purposes.

Optical facilities **400** can be light pipes, lenses, light guides and fibers and any other light transmitting materials.

In other embodiments, non-imaging optics are used as an optical facility. Non-imaging optics do not require traditional lenses. They use shaped surfaces to diffuse and direct light. A fundamental issue with fixtures using discrete light sources is mixing the light to reduce or eliminate color

shadows and to produce uniform and homogenous light output. Part of the issue is the use of high efficiency surfaces that do not absorb light but bounce and reflect the light in a desired direction or manner. Optical facilities can be used to direct light to create optical forms of illumination from lighting units **102**.

The actuator **404** can be any type of actuator for providing linear movement, such as an electromechanical element, a screw drive mechanism (such as used in computer printers), a screw drive, or other element for linear movement known to those of ordinary skill in the art.

In embodiments the optical facility is a fluid filled lens, which contains a compressible fluid, such as a gas or liquid. The actuator includes a valve for delivering fluid to the interior chamber of the lens.

In embodiments a digital mirror **408** serves as an optical facility **400**. The digital mirror is optionally under control of a processor **3600**, which governs the reflective properties of the digital mirror.

In embodiments a spinning mirror system **614** serves as an optical facility **400**. As in other embodiments, the spinning mirror system is responsive to the control of a processor, which may be integrated with it or separate.

In embodiments a grating light valve (GLV) **418** serves as an optical facility **400**. The grating light valve can receive light from a lighting unit under control of a processor. GLV uses micro-electromechanical systems (MEMS) technology and optical physics to vary how light is reflected from each of multiple ribbon-like structures that represent a particular "image point" or pixel. The ribbons can move a tiny distance, such as between an initial state and a depressed state. When the ribbons move, they change the wavelength of reflected light. Grayscale tones can also be achieved by varying the speed at which given pixels are switched on and off. The resulting image can be projected in a wide variety of environments, such as a large arena with a bright light source or on a small device using low power light sources. In the GLV, picture elements (pixels) are formed on the surface of a silicon chip and become the source for projection.

In embodiments an acousto-optical modulator serves as an optical facility **400**. Also known as a tunable filter and as a Bragg cell, the acousto-optical modulator consists of a crystal that is designed to receive acoustic waves generated, for example, by a transducer, such as a piezoelectric transducer. The acoustic standing waves produce index of refraction changes in the crystal, essentially due to a Doppler shift, so that the crystal serves as a tunable diffraction grating. Incident light, such as from a lighting unit **102**, is reflected in the crystal by varying degrees, depending on the wavelength of the acoustic standing waves induced by the transducer. The transducer can be responsive to a processor, such as to convert a signal of any type into an acoustic signal that is sent through the crystal.

Referring again to FIG. **6**, in embodiments the optical facility **400** is a reflector **612**, such as a reflective dome for providing illumination from a wide variety of beam angles, rather than from one or a small number of beam angles. Providing many beam angles reduces harsh reflections and provides a smoother view of an object. A reflective surface is provided for reflecting light from a lighting unit **102** to the object. The reflective surface is substantially parabolic, so that light from the lighting unit **102** is reflected substantially to the object, regardless of the angle at which it hits the reflective surface from the lighting unit **102**. The surface could be treated to a mirror surface, or to a matte Lambertian surface that reflects light substantially equally in all directions. As a result, the object is lit from many different angles, making it visible without harsh reflections. The object may optionally be viewed by a camera, which may optionally be part of or in operative connection with a vision system. The camera may view the object through a space in the reflective surface, such as located along an axis of viewing from above the object. The object may rest on a platform, which may be a moving platform. The platform, light system **100**, vision system and camera may each be under control of a processor, so that the viewing of the object and the illumination of the object may be coordinated, such as to view the object under different colors of illumination.

Referring to FIG. **7**, optical facilities include a light pipe **420** that reflects light to produce a particular pattern of light at the output end. A different shape of light pipe produces a different pattern. In general, such secondary optics, whether imaging or non-imaging, and made of plastic, glass, mirrors or other materials, can be added to a lighting unit **102** to shape and form the light emission. Such an optical facility **400** can be used to spread, narrow, diffuse, diffract, refract or reflect the light in order that a different output property of the light is created. These can be fixed or variable. Examples can be light pipes, lenses, light guides and fibers and any other light transmitting materials, or a combination of any of these.

In embodiments the light pipe **420** serves as an optical facility, delivering light from one or more lighting systems **102** to an illuminated material. The lighting systems **100** are optionally controlled by a control facility **3500**, which controls the lighting systems **102** to send light of selected colors, color temperatures, intensities and the like into the interior of the light pipe. In other embodiments a central controller is not required, such as in embodiments where the lighting systems **102** include their own processor. In embodiments one or more lighting systems **102** may be equipped with a communications facility, such as a data port, receiver, transmitter, or the like. Such lighting systems **102** may receive and transmit data, such as to and from other lighting systems **100**. Thus, a chain of lighting systems **100** in a light pipe may transmit not only light, but also data along the pipe, including data that sends control signals for the lighting systems disposed in the pipe.

The optical facility may be a color mixing system **422** for mixing color from a lighting unit **102**. The color mixing system may consist of two opposing truncated conical sections, which meet at a boundary. Light from a lighting unit **102** is delivered into the color mixing system and reflected from the interior surfaces of the two sections. The reflections mix the light and produce a mixed light from the distal end of the color mixing system. U.S. Pat. No. 2,686,866 to Williams, incorporated by reference herein, shows a color mixing lighting apparatus utilizing two inverted cones to reflect and mix the light from multiple sources. By combining a color mixing system such as this with color changes from the lighting unit **102**, a user can produce a wide variety of lighting effects.

Other color mixing systems can work well in conjunction with color changing lighting systems **102**. For example, U.S. Pat. No. 2,673,923 to Williams, also incorporated by reference herein, uses a series of lens plates for color mixing.

In embodiments an optical facility is depicted consisting of a plurality of cylindrical lens elements. These cylindrical elements diffract light from a lighting unit **102**, producing a variety of patterns of different colors, based on the light from the lighting unit **102**. The cylinders may be of a wide variety of sizes, ranging from microlens materials to conventional lenses.

In embodiments the optical facility **400** is a microlens array **424**. The microlens array consists of a plurality of microscopic hexagonal lenses, aligned in a honeycomb configuration. Microlenses are optionally either refractive or diffractive, and can be as small as a few microns in diameter. Microlens arrays can be made using standard materials such as fused silica and silicon and newer materials such as Gallium Phosphide, making possible a very wide variety of lenses. Microlenses can be made on one side of a material or with lenses on both sides of a substrate aligned to within as little as one micron. Surface roughness values of 20 to 80 angstroms RMS are typical, and the addition of various coatings can produce optics with very high transmission rates. The microlens array can refract or diffract light from a lighting unit **102** to produce a variety of effects.

In embodiments a microlens array optical facility **400** can consist of a plurality of substantially circular lens elements. The array can be constructed of conventional materials such as silica, with lens diameters on the range of a few microns. The array can operate on light from a lighting unit **102** to produce a variety of colors and optical effects.

In embodiments a microlens array is disposed in a flexible material, so that the optical facility **400** can be configured by bending and shaping the material that includes the array.

In embodiments a flexible microlens array is rolled to form a cylindrical shape for receiving light from a lighting unit **102**. The configuration could be used, for example, as a light-transmissive lamp shade with a unique appearance.

In embodiments a system can be provided to roll a microlens array about an axis. A drive mechanism can roll or unroll the flexible array under control of a controller. The controller can also control a lighting unit **102**, so that the array is disposed in front of the lighting unit **102** or rolled away from it, as selected by the user.

The terms "lighting unit," "luminaire" and "lighting fixture" are used herein to refer to an apparatus including one or more light sources **300**. A given lighting unit **102** may have any one of a variety of mounting arrangements for the light source(s) in a variety of housings **800**. Housings **800** may include enclosures, platforms, boards, mountings, and many other form factors, including forms designed for other purposes. Housings **800** may be made of any material, such as metals, alloys, plastics, polymers, and many others.

Referring to FIG. **8**, housings **800** may include panels **804** that consist of a support platform on which light sources **300** are disposed in an array. Equipped with a diffuser **502**, a panel **804** can form a light tile **802**. The diffuser **502** for a light tile **802** can take many forms, as depicted in FIG. **8**. The light tile **802** can be of any shape, such as square, rectangular, triangular, circular or irregular. The light tile **802** can be used on or as a part of a wall, door, window, ceiling, floor, or other architectural features, or as a work of art, or as a toy, novelty item, or item for entertainment, among other uses. Housings **800** may be configured as tiles or panels, such as for wall-hangings, walls, ceiling tiles, or floor tiles.

Referring to FIG. **9**, housings **800** may include a housing for an architectural lighting fixture **810**, such as a wall-washing fixture. Housings **800** may be square, rectangular **810**, circular, cylindrical **812**, or linear **814**. A linear housing **814** may be equipped with a diffuser **502** to simulate a neon light of various shapes, or it may be provided without a diffuser, such as to light an alcove or similar location. A housing **800** may be provided with a watertight seal, to provide an underwater lighting system **818**.

Housings **800** may be configured to resemble retrofit bulbs, fluorescent bulbs, incandescent bulbs, halogen lamps, high-intensity discharge lamps, or other kinds of bulbs and lamps. Housings **800** may be configured to resemble neon lights, such as for signs, logos, or decorative purposes. Housings **800** may be configured to highlight architectural features, such as lines of a building, room or architectural feature. Housings **800** may be configured for various industrial applications, such as medical lighting, surgical lighting, automotive lighting, under-car lighting, machine vision lighting, photographic lighting, lighting for building interiors or exteriors, lighting for transportation facilities, lighting for pools, spas, fountains and baths, and many other kinds of lighting.

Additionally, one or more lighting units similar to that described in connection with FIG. **2** may be implemented in a variety of products including, but not limited to, various forms of light modules or bulbs having various shapes and electrical/mechanical coupling arrangements (including replacement or "retrofit" modules or bulbs adapted for use in conventional sockets or fixtures), as well as a variety of consumer and/or household products (e.g., night lights, toys, games or game components, entertainment components or systems, utensils, appliances, kitchen aids, cleaning products, etc.).

Lighting units **102** encompassed herein include lighting units **102** configured to resemble all conventional light bulb types, so that lighting units **102** can be conveniently retrofitted into fixtures, lamps and environments suitable for such environments. Such retrofitting lighting units **102** can be designed, as disclosed above and in the applications incorporated herein by reference, to use conventional sockets of all types, as well as conventional lighting switches, dimmers, and other controls suitable for turning on and off or otherwise controlling conventional light bulbs. Retrofit lighting units **102** encompassed herein include incandescent lamps, such as A15 Med, A19 Med, A21 Med, A21 3C Med, A23 Med, B10 Blunt Tip, B10 Crystal, B10 Candle, F15, GT, C7 Candle C7 DC Bay, C15, CA10, CA8, G16/1/2 Cand, G16-1/2 Med, G25 Med, G30 Med, G40 Med, S6 Cand, S6 DC Bay, S11 Cand, S11 DC Bay, S11 Inter, S11 Med, S14 Med, S19 Med, LINESTRA 2-base, T6 Cand, T7 Cand, T7 DC Bay, T7 Inter, T8 Cand, T8 DC Bay, T8 Inter, T10 Med, T6-1/2 Inter, T6-1/2 DC Bay, R16 Med, ER30 Med, ER40 Med, BR30 Med, BR40 Med, R14 Inter, R14 Med, K19, R20 Med, R30 Med, R40 Med, R40 Med Skrt, R40 Mog, R52 Mog, P25 Med, PS25 3C, PS25 Med, PS30 Med, PS35 Mog, PS52 Mog, PAR38 Med Skrt, PAR38 Med Sid Pr, PAR46 Scrw Trm, PAR46 Mog End Pr, PAR 46 Med Sid Pr, PAR56 Scrw Trm, PAR56 Mog End Pr, PAR 64 Scrw Trm, and PAR64 Ex Mog End Pr. Also, retrofit lighting units **102** include conventional tungsten/halogen lamps, such as BT4, T3, T4 BI-PIN, T4 G9, MR16, MRI 1, PAR14, PAR16, PAR16 GU10, PAR20, PAR30, PAR30LN, PAR36, PAR38 Medium Skt., PAR38 Medium Side Prong, AR70, AR111, PAR56 Mog End Pr, PAR64 Mog End Pr, T4 DC Bayonet, T3, T4 Mini Can, T3, T4 RSC Double End, T1, and MB19. Lighting units **102** can also include retrofit lamps configured to resemble high intensity discharge lamps, such as E17, ET18, ET23.5, E25, BT37, BT56, PAR20, PAR30, PAR38, R40, T RSC base, T Fc2 base, T G12 base, T G8.5 base, T Mogul base, and TBY22d base lamps. Lighting units **102** can also be configured to resemble fluorescent lamps, such as T2 Axial Base, T5 Miniature Bipin, T8 Medium Bipin, T8 Medium Bipin, T12 Medium Bipin, U-shaped t-12, OCTRON T-8 U-shaped, OCTRON T8 Recessed Double Contact, T12 Recessed Double Contact, T14-1/2 Recessed Double Contact, T6 Single Pin, T8 Single Pin, T12 Single Pin, ICETRON, Circline 4-Pin T-19, PENTRON CIR-

CLINE 4-pin T5, DULUX S, DULUX S/E, DULUX D, DULUX D/E, DULUX T, DULUX T/E, DULUX T/E/IN, DULUX L, DULUX F, DULUX EL Triple, DULUX EL TWIST DULUX EL CLASSIC, DULUX EL BULLET, DULUX EL Low Profile GLOBE, DULUX EL GLOBE, DULUE EL REFLECTOR, and DULUX EL Circline. Lighting units **102** can also include specialty lamps, such as for medical, machine vision, or other industrial or commercial applications, such as airfield/aircraft lamps, audio visual maps, special purpose heat lamps, studio, theatre, TV and video lamps, projector lamps, discharge lamps, marine lamps, aquatic lamps, and photo-optic discharge lamps, such as HBO, HMD, HMI, HMP, HSD, HSR, HTI, LINEX, PLANON, VIP, XBO and XERADEX lamps. Other lamps types can be found in product catalog for lighting manufacturers, such as the Sylvania Lamp and Ballast Product Catalog 2002, from Sylvania Corporation or similar catalogs offered by General Electric and Philips Corporation.

In embodiments the lighting system may have a housing configured to resemble a fluorescent or neon light. The housing may be linear, curved, bent, branched, or in a "T" or "V" shape, among other shapes.

Housings **800** can take various shapes, such as one that resembles a point source, such as a circle or oval. Such a point source can be located in a conventional lighting fixture, such as lamp or a cylindrical fixture. Lighting units **102** can be configured in substantially linear arrangements, either by positioning point sources in a line, or by disposing light sources substantially in a line on a board located in a substantially linear housing, such as a cylindrical housing. A linear lighting unit can be placed end-to-end with other linear elements or elements of other shapes to produce longer linear lighting systems comprised of multiple lighting units **102** in various shapes. A housing can be curved to form a curvilinear lighting unit. Similarly, junctions can be created with branches, "Ts," or "Ys" to created a branched lighting unit. A bent lighting unit can include one or more "V" elements. Combinations of various configurations of point source, linear, curvilinear, branched and bent lighting units **102** can be used to create any shape of lighting system, such as one shaped to resemble a letter, number, symbol, logo, object, structure, or the like.

Housings **800** can include or be combined to produce three-dimensional configurations, such as made from a plurality of lighting units **102**. Linear lighting units **102** can be used to create three-dimensional structures and objects, or to outline existing structures and objects when disposed along the lines of such structures and objects. Many different displays, objects, structures, and works of art can be created using linear lighting units as a medium. Examples include pyramid configurations, building outlines and two-dimensional arrays. Linear units in two-dimensional arrays can be controlled to act as pixels in a lighting show.

In embodiments the housing **800** may be a housing for an architectural, theatrical, or entertainment lighting fixture, luminaire, lamp, system or other product. The housing **800** may be made of a metal, a plastic, a polymer, a ceramic material, glass, an alloy or another suitable material. The housing **800** may be cylindrical, hemispherical, rectangular, square, or another suitable shape. The size of the housing may range from very small to large diameters, depending on the nature of the lighting application. The housing **800** may be configured to resemble a conventional architectural lighting fixture, such as to facilitate installation in proximity to other fixtures, including those that use traditional lighting technologies such as incandescent, fluorescent, halogen, or the like. The housing **800** may be configured to resemble a lamp. The housing **800** may be configured as a spot light, a down light, an up light, a cove light, an alcove light, a sconce, a border light, a wall-washing fixture, an alcove light, an area light, a desk lamp, a chandelier, a ceiling fan light, a marker light, a theatrical light, a moving-head light, a pathway light, a cove light, a recessed light, a track light, a wall fixture, a ceiling fixture, a floor fixture, a circular fixture, a spherical fixture, a square fixture, a rectangular fixture, an accent light, a pendant, a parabolic fixture, a strip light, a soffit light, a valence light, a floodlight, an indirect lighting fixture, a direct lighting fixture, a flood light, a cable light, a swag light, a picture light, a portable luminaire, an island light, a torchiere, a boundary light, a flushor any other kind architectural or theatrical lighting fixture or luminaire.

Housings may also take appropriate shapes for various specialized, industrial, commercial or high performance lighting applications. For example, in an embodiment a miniature system, such as might be suitable for medical or surgical applications or other applications demanding very small light systems **100**, can include a substantially flat light shape, such as round, square, triangular or rectangular shapes, as well as non-symmetric shapes such as tapered shapes. In many such embodiments, housing **800** could be generally described as a planar shape with some small amount of depth for components. The housing **800** can be small and round, such as about ten millimeters in diameter (and can be designed with the same or similar configuration at many different scales.) The housing **800** may include a power facility, a mounting facility and an optical facility. The housing **800** and optical facility can be made of metals or plastic materials suitable for medical use. Referring to FIG. **10**, a housing **800** for a lighting unit **100** may serve as a housing for another object as well, such as a compact **1002**, a flashlight **1004**, a ball **1008**, a mirror **1012**, an overhead light **1014**, a wand **1010**, a traffic light **1020**, a mirror **1018**, a sign **1022**, a toothbrush **1024**, a cube **1028** (such as a Lucite cube), a display **1030**, a handheld computer **1032**, a phone **1034**, or a block **1038**. Almost any object can be integrated with a lighting unit **102** to provide a controlled lighting feature.

FIG. **11** shows additional housings **800** for lighting units **102**, such as blocks **1104**, balls **1108**, pucks **1110**, spheres **1112**, and lamps **1114**.

Referring to FIG. **11**, housings **800** may also take the form of a flexible band **1102**, tape or ribbon to allow the user to conform the housing to particular shapes or cavities. Similarly, housings **800** can take the form of a flexible string **1104**. Such a band **1102** or string **1104** can be made in various lengths, widths and thicknesses to suit specific demands of applications that benefit from flexible housings **800**, such as for shaping to fit body parts or cavities for surgical lighting applications, shaping to fit objects, shaping to fit unusual spaces, or the like. In flexible embodiments it may be advantageous to use thin-form batteries, such as polymer or "paper" batteries for small bands **1102** or strings **1104**.

Referring to FIG. **12**, lighting units **102** can be disposed in a sign **1204**, such as to provide lighting. Combined with diffusers **502**, the lighting units **102** can produce an effect similar to neon lights. Signs **1204** can take many different forms, with lighting units **102**, housings **800** and diffusers **502** shaped to resemble logos, characters, numbers, symbols, and other signage elements. In embodiments the sign **1204** can be made of light-transmissive materials. Thus, a sign **1204** can glow with light from the lighting units **102**, similar to the way a neon light glows. The sign **1204** can be configured in letters, symbols, numbers, or other configu-

rations, either by constructing it that way, or by providing sub-elements that are fit together to form the desired configuration. The light from the lighting units **102** can be white light, other colors of light, or light of varying color temperatures. In an embodiment the sign **1204** can be made from a kit that includes various sub-elements, such as curved elements, straight elements, "T" junctions, "V-" and "U-" shaped elements, and the like.

In embodiments a housing **800** may be configured as a sphere or ball, so as to produce light in substantially all directions. The ball housing **800** can be made of plastic or glass material that could be transparent for maximum light projection or diffuse to provide softer light output that is less subject to reflections. The ball housing **800** could be very small, such as the size of a marble or a golf ball, so that it is easily managed in environments that require miniature light systems **100**, or it could be very large, such as in art, architectural, and entertainment applications. Multiple balls can be used simultaneously to provide additional light. If it is desired to have directional light from a ball lighting system **100**, then part of the ball can be made dark.

Housings **800** can incorporate lighting units **102** into conventional objects, such as tools, utensils, or other objects. For example, a housing **800** may be shaped into a surgical tool, such as tweezers, forceps, retractors, knives, scalpels, suction tubes, clamps or the like. A lighting unit **102** can be collocated at the end of a tool and provide illumination to the working area of the tool. One of many advantages of this type of tool is the ability to directly illuminate the working area, avoiding the tendency of tools or the hands that use them to obscure the working area. Tools can have onboard batteries or include other power facilities as described herein.

Housings **800** can also be configured as conventional tools with integrated lighting units **102**, such as hammers, screw drivers, wrenches (monkey wrenches, socket wrenches and the like), pliers, vise-grips, awls, knives, forks, spoons, wedges, drills, drill bits, saws (circular saws, jigsaws, mitre saws and the like), sledge hammers, shovels, digging tools, plumbing tools, trowels, rakes, axes, hatchets and other tools. As with surgical tools, including the lighting unit **102** as part of the tool itself allows lighting a work area or work piece without the light being obscured by the tool or the user.

Referring to FIG. **13**, a housing may be configured to resemble a conventional MR-type halogen fixture **1300**. A rectangular opening **1302** in the housing **800** allows the positioning of a connector that serves as an interface **4904** between a socket into which the housing **800** is positioned and a board **204** that bears the light sources **300**, which include a plurality of LEDs. The interface **4904** provides a mechanical, electrical and data connection between the board **204** and the socket into which the housing **800** is placed.

Referring to FIGS. **14***a* and **14***b*, a housing **800** may be a linear housing **1402**. Referring to FIG. **14***a*, the housing may include connectors **1404** located at the ends of the linear housing **1402**, so that separate modular units of the housing **1402** can be connected end-to-end at a junction **1412** with little spacing in between. The connectors **1404** of FIG. **14***b* extend from the housing **800**. The connectors **1404** can be designed to transmit power and data from one lighting unit **102** to another lighting unit **102** having a similar linear housing **1402**. The top of the housing can include a slot **1408** into which light sources **300** are disposed. The housing **800** can be fit with a lens **1412** for protecting the light sources **300** or shaping light coming from the light sources **300**. The lens **1412** can be provided with a very tight seal, such as to prevent a user from touching the light sources **300** or any of the drive circuitry. In embodiments the housing **1402** may house drive circuitry for a high-voltage embodiment, as described in more detail below and in applications incorporated herein by reference. In embodiments the housing **1402** may include a cover **1414** for covering the connector **1404** if the connector is not in use. The linear housing **1402** can be deployed to produce many different effects in many different environments, as described in connection with other linear embodiments described herein. In one preferred embodiment, lighting units **102** with linear housings **1402** are strung end-to-end in an alcove to light the alcove. In another preferred embodiments, such lighting units **102** with linear housings **1402** are connected end-to-end across the base of a wall or other architectural feature to wash the wall or other feature with light of varying colors.

In embodiments a light source **300** may be equipped with a primary optical facility **1700**, such as a lens, diode package, or phosphor for shaping, spreading or otherwise optically operating on photons that exit the semiconductor in an LED. For example, a phosphor may be used to convert UV or blue radiation coming out of a light source **300** into broader band illumination, such as white illumination. Primary optical facilities may include packages such as those used for one-watt, three-watt, five-watt and power packages offered by manufacturers such as LumiLeds, Nichia, Cree and Osram-Opto.

In one embodiment, the lighting unit **102** or a light source **300** of FIGS. **1** and **2** may include and/or be coupled to a power facility **1800**. In various aspects, examples of power facilities **1800** include, but are not limited to, AC power sources, DC power sources, batteries, solar-based power sources, thermoelectric or mechanical-based power sources and the like. Additionally, in one aspect, the power facility **1800** may include or be associated with one or more power conversion devices that convert power received by an external power source to a form suitable for operation of the lighting unit **102**.

Light sources **300** have varying power requirements. Accordingly, lighting units **102** may be provided with dedicated power supplies that take power from power lines and convert it to power suitable for running a lighting unit **102**. Power supplies may be separate from lighting units **102** or may be incorporated on-board the lighting units **102** in power-on-board configurations. Power supplies may power multiple lighting units **102** or a single lighting unit **102**. In embodiments power supplies may provide low-voltage output or high-voltage output. Power supplies may take line voltage or may take power input that is interrupted or modified by other devices, such as user interfaces **4908**, such as switches, dials, sliders, dimmers, and the like.

In embodiments a line voltage power supply is integrated into a lighting system **100** and a power line carrier (PLC) serves as a power facility **1800** and as a control facility **3500** for delivering data to the lighting units **102** in the lighting system **100** over the power line. In other cases a lighting system **100** ties into existing power systems (120 or 220VAC), and the data is separately wired or provided through wireless.

A power facility **1800** may include a battery, such as a watch-style battery, such as Lithium, Alkaline, Silver-Zinc, Nickel-Cadmium, Nickel metal hydride, Lithium ion and others. The power facility **1800** may include a thin-form polymer battery that has the advantage of being very low profile and flexible, which can be useful for lighting unit configurations in flexible forms such as ribbons and tape. A

power facility **1800** may also comprise a fuel cell, photovoltaic cell, solar cell or similar energy-producing facility. A power facility **1800** may be a supercapacitor, a large-value capacitor that can store much more energy than a conventional capacitor. Charging can be accomplished externally through electrical contacts and the lighting device can be reused. A power facility **1800** can include an inductive charging facility. An inductive charging surface can be brought in proximity to a lighting unit **102** to charge an onboard power source, allowing, for example, a housing **800** to be sealed to keep out moisture and contaminants.

Battery technologies typically generate power at specific voltage levels such as 1.2 or 1.5V DC. LED light sources **300**, however, typically require forward voltages ranging from around 2VDC to 3.2VDC. As a result batteries may be put in series to achieve the required voltage, or a boost converter may be used to raise the voltage.

It is also possible to use natural energy sources as a power facility **1800**, such as solar power, the body's own heat, mechanical power generation, the body's electrical field, wind power, water power, or the like.

Referring to FIG. **15**, in embodiments it is desirable to supply power factor correction (PFC) to power for a lighting unit **102**. In a power-factor-corrected lighting system **102**, a line interference filter and rectifier **1802** may be used to remove interference from the incoming line power and to rectify the power. The rectified power can be delivered to a power factor corrector **1804** that operates under control of a control circuit **1810** to provide power factor correction, which is in turn used to provide a high voltage direct current output **1808** to the lighting unit **102**. Many embodiments of power factor correction systems can be used as alternatives to the embodiment of FIG. **15**.

FIG. **16***a* shows an embodiment of a lighting system **100** with a power factor correction facility **1804**. The line filter and rectifier **1802** takes power from the line, filters and rectifies the power, and supplies it to the power factor correction facility **1804**. The embodiment of FIG. **16***a* includes a DC to DC converter **1812** that converts the output of the power factor correction facility **1804** to, for example, twenty-four volt power for delivery via a bus. The bus also carries data from a data converter **1904**, which carries a control signal for the lighting units **102** that are attached to the bus that carries both the power and the data. In the embodiment of FIG. **16***b*, the DC to DC converter **1812** is disposed locally at each lighting unit **102**, rather than in a central power supply as in FIG. **16***a*.

FIG. **17** shows an embodiment where the power factor correction facility **1804** and DC to DC converter **1812** are integrated into a single stage power factor correction/DC to DC converter facility **1908** that is integrated with the lighting unit **102**, rather than being contained in a separate power supply. The alternating current line power is delivered to a high-voltage three wire power/data bus **1910** that also carries input from a data converter **1904** that carries control signals for the lighting unit **102**. Power factor correction and conversion to DC output voltages suitable for light sources **300** such as LEDs occurs at the lighting units **102**. Unlike conventional power supplies where power factor correction is absent or present only in a separate power supply, the local power factor correction/DC to DC converter **1908** can take line voltage and correct it to an appropriate input for a LED light source **300** even if the line voltage has degraded substantially after a long run of wire. The configuration of FIG. **17** and other alternative embodiments that supply power factor correction and voltage conversion on board allow lighting units **102** to be configured in long strings over very large geometries, without the need to install separate power supplies for each lighting unit **102**. Accordingly, it is one preferred embodiment of a power supply for disposing lighting units **102** on building exteriors and other large environments where it is inconvenient to install or maintain many separate power supplies.

In embodiments it is desirable to provide power and data over the same line. Referring to FIG. **18**, a multiplexer **1850** takes a data input and a direct current power input and combines them to provide a combined power and data signal. **1852**.

Semiconductor devices like LED light sources **300** can be damaged by heat; accordingly, a system **100** may include a thermal facility **2500** for removing heat from a lighting unit **102**. Referring to FIG. **19**, the thermal facility **2500** may be any facility for managing the flow of heat, such as a convection facility **2700**, such as a fan **2702** or similar mechanism for providing air flow to the lighting unit **102**, a pump or similar facility for providing flow of a heat-conducting fluid, a vent **2704** for allowing flow of air, or any other kind of convection facility **2700**. A fan **2702** or other convection facility **2700** can be under control of a processor **3600** and a temperature sensor such as a thermostat to provide cooling when necessary and to remain off when not necessary.

The thermal facility **2500** can also be a conduction facility **2600**, such as a conducting plate or pad of metal, alloy, or other heat-conducting material, a gap pad **2602** between a board **204** bearing light sources **300** and another facility, a thermal conduction path between heat-producing elements such as light sources **300** and circuit elements, or a thermal potting facility, such as a polymer for coating heat-producing elements to receive and trap heat away from the light sources **300**. The thermal facility **2500** may be a radiation facility **2800** for allowing heat to radiate away from a lighting unit **102**. A fluid thermal facility **2900** can permit flow of a liquid or gas to carry heat away from a lighting unit **102**. The fluid may be water, a chlorofluorocarbon, a coolant, or the like. In a preferred embodiment a conductive plate is aluminum or copper. In embodiments a thermal conduction path **2720** conducts heat from a circuit board **204** bearing light sources **300** to a housing **800**, so that the housing **800** radiates heat away from the lighting unit **102**.

Referring to FIG. **20**, a mechanical interface **3200** may be provided for connecting a lighting unit **102** or light source **300** mechanically to a platform, housing **800**, mounting, board, other lighting unit **102**, or other product or system. In embodiments the mechanical interface **3200** may be a modular interface for removeably and replaceably connecting a lighting unit **102** to another lighting unit **102** or to a board **204**. A board **204** may include a lighting unit **102**, or it may include a power facility for a lighting unit **102**.

In embodiments the modular interface **3202** comprises a board **204** with a light source **300** on one side and drive circuit elements on the other side, or two boards **204** with the respective elements on opposites sides and the boards **204** coupled together. The modular interface **3202** may be designed to allow removal or replacement of a lighting unit **102**, either in the user environment of the lighting unit **102** or at the factory. In embodiments a lighting unit **102** has a mechanical retrofit interface **3300** for allowing it to fit the housing of a traditional lighting source, such as a halogen bulb **3302**. In embodiments the modular interface **3200** is designed to allow multiple lighting units **102** to fit together, such as a modular block **3204** with teeth, slots, and other connectors that allow lighting units **102** to serve as building blocks for larger systems of lighting units **102**.

In embodiments the retrofit interface **3300** allows the lighting unit **102** to retrofit into the mechanical structure of a traditional lighting source, such as screw for an Edison-mount socket, pins for a Halogen socket, ballasts for a fluorescent fixture, or the like.

In embodiments the mechanical interface is a socket interface **3400**, such as to allow the lighting unit **102** to fit into any conventional type of socket, which in embodiments may be a socket equipped with a control facility **3500**, i.e., a smart socket.

In embodiments the mechanical interface **3200** is a circuit board **204** on which a plurality of light sources **300** are disposed. The board **204** can be configured to fit into a particular type of housing **800**, such as any of the housings **800** described above. In embodiments the board **204** may be moveably positioned relative to the position of the housing **800**. A control facility may adjust the position of the board **204**.

A kit may be provided for producing an illumination system, which may include light sources **300**, components for a control facility **3500**, and instructions for using the control facility components to control the light sources **300** to produce an illumination effect.

In embodiments a control facility **3500** for a light source **300** may be disposed on a second board **204**, so that the control facility **3500** can be moveably positioned relative to the board **204** on which the light sources **300** are disposed. In embodiments the board for the control facility **3500** and the board **204** for the light sources **300** are configured to mechanically connect in a modular way, permitting removal and replacement of one board **204** relative to the other, whether during manufacturing or in the field.

A developer's kit may be provided including light sources **300**, a circuit board **204** and instructions for integrating the board **204** into a housing **800**. A board **204** with light sources **300** may be provided as a component for a manufacturer of a lighting system **100**. The component may further include a chip, firmware, and instructions or specifications for configuring the system into a lighting system **100**.

In embodiments a board **204** carrying LEDs may be configured to fit into an architectural lighting fixture housing **800** or other housing **800** as described above.

In embodiments, a light source **300** can be configured with an off-axis mounting facility or a light shade that selectively allows light to shine through in certain areas and not in others. These techniques can be used to reduce glare and light shining directly into the eyes of a user of the lighting unit **102**. Snap-on lenses can be used atop the light-emitting portion to allow for a much wider selection of light patterns and optical needs. In embodiments a disk-shaped light source **300** emits light in one off-axis direction. The light can then be rotated about the center axis to direct the light in a desired direction. The device may be simply picked up, rotated, and placed back down using the fastening means such as magnetic or clamp (see below for more fastening options) or may simply incorporate a rotational mechanism.

Referring to FIG. **21**, in embodiments the mechanical interface **3200** may connect light sources **300** to fiber bundles **2102** to create flexible lighting units **102**. A lighting unit **102** can be configured to be incorporated directly in a tool **2104**, so that the fiber transports the light to another part of the tool **2104**. This would allow the light source **300** to be separated from the 'working' end of the tool **2104** but still provide the lighting unit **102** without external cabling and with only a short efficient length of fiber. An electroluminescent panel can be used wherein the power is supplied via onboard power in the form of a battery or a cable or wire to an off board source.

A mechanical interface **3200** may include facilities for fastening lighting units **102** or light sources **300**, such as to platforms, tools, housing or the like. Embodiments include a magnetic fastening facility. In embodiments a lighting unit **102** is clamped or screwed into a tool or instrument. For example, a screw-type clamp **2108** can be used to attach a lighting unit **102** to another surface. A toggle-type clamp can be used, such as De-Sta-Co style clamps as used in the surgical field. A clip or snap-on facility can be used to attach a lighting unit **102** and allow flexing elements. A flexible clip **2110** can be added to the back of a lighting device **102** to make it easy to attach to another surface. A spring-clip, similar to a binder clip, can be attached to the back of a lighting unit **102**. A flexing element can provide friction when placed on another surface. Fasteners can include a spring-hinge mechanism, string, wire, Ty-wraps, hook and loop fastener **2114**, adhesives or the like. Fastening materials include bone wax **2112**; a beeswax compound (sometimes mixed with Vaseline), which can be hand, molded, and can also be used for holding the lighting device **102**. The exterior of the lighting device **102** can be textured to provide grip and holding power to facilitate the fastening. Tapes, such as surgical DuoPlas tape from Sterion, are another example of materials that can be used to fasten the light to tools, instruments, and drapes or directly to the patient.

Mechanical interfaces **3200** configured as boards **204** on which light sources **300** are disposed can take many shapes, including shapes that allow the boards **204** to be used as elements, such as tiles, to make up larger structures. Thus, a board **204** can be a triangle **2118**, square **2120**, hexagon, or other element that can serve as a subunit of a larger pattern, such as a two-dimensional planar pattern or a three-dimensional object, such as a regular polyhedron or irregular object.

Referring to FIG. **22**, boards **204** can provide a mechanical and electrical connection **2202**, such as with matching tabs and spaces that fit into each other to hold the boards **204** together. Such boards can build large structures. For example, a large number of triangular boards **2118** can be arranged together to form a substantially spherical configuration **2204** that resembles a large ball, with individual lighting units **102** distributed about the entire perimeter to shine light in substantially all directions from the ball sphere **2204**.

FIG. **14** showed a mechanical interface **3200** for connecting two linear lighting units **102** end-to-end. Another mechanical interface **3200** is seen in FIG. **23**, where cables **2322** exit a portal **2324** in the housing **800** and enter a similar portal **2324** in the housing **800** of the next linear unit **102**, so that the two units **102** can be placed end-to-end. A protective cover **2320** can cover the cables **2322** between the units **102**. The cables **2322** can carry power and data between the units **102**.

In embodiments, mechanical interfaces **3200** can include thermal facilities **2500** such as those described above as well as facilities for delivering power and data.

A control facility **3500** may produce a signal for instructing a light system **100** lighting unit **102** to produce a desired light output, such as a mixture of light from different light sources **300**. Control facilities can be local to a lighting unit **102** or remote from the lighting unit **102**. Multiple lighting units **102** can be linked to central control facilities **3500** or can have local control facilities **3500**. Control facilities can use a wide range of data protocols, ranging from simple

switches for "on" and "off" capabilities to complex data protocols such as Ethernet and DMX.

Referring to FIG. **24***a*, a control facility **3500** may include drive hardware **3800** for delivering controlled current to one or more light sources **300**. Referring to FIGS. **24***a* and **24***b*, control signals from a control facility **3500**, such as a central data source, are used by a processor **3600** that controls the drive hardware **3800**, causing current to be delivered to the light sources **300** in the desired intensities and durations, often in very rapid pulses of current, such as in pulse width modulation or pulse amplitude modulation, or combinations of them, as described below. Two examples of drive hardware **3800** circuits are shown in FIG. **24**, but many alternative embodiments are possible, including those described in the patent incorporated by reference herein. Referring to FIG. **24***c* in embodiments power from a power facility **1800** and data from a control facility **3500** are delivered together as an input **2402**. A dipswitch **2408** can be used to provide a processor **3600** with a unique address, so that the lighting unit **102** responds to control signals intended for that particular lighting unit **102**. The processor **3600** reads the power/data input and drives the drive hardware **3800** to provide current to the light sources **300**.

In embodiments the control facility **3500** includes the processor **3600**. "Processor" or "controller" describes various apparatus relating to the operation of one or more light sources. A processor or controller can be implemented in numerous ways, such as with dedicated hardware, using one or more microprocessors that are programmed using software (e.g., microcode or firmware) to perform the various functions discussed herein, or as a combination of dedicated hardware to perform some functions and programmed microprocessors and associated circuitry to perform other functions. The terms "program" or "computer program" are used herein in a generic sense to refer to any type of computer code (e.g., software or microcode) that can be employed to program one or more processors or controllers, including by retrieval of stored sequences of instructions.

In particular, in a networked lighting system environment, as discussed in greater detail further below (e.g., in connection with FIG. **2**), as data is communicated via the network, the processor **3600** of each lighting unit coupled to the network may be configured to be responsive to particular data (e.g., lighting control commands) that pertain to it (e.g., in some cases, as dictated by the respective identifiers of the networked lighting units). Once a given processor identifies particular data intended for it, it may read the data and, for example, change the lighting conditions produced by its light sources according to the received data (e.g., by generating appropriate control signals to the light sources). In one aspect, a data facility **3700** of each lighting unit **102** coupled to the network may be loaded, for example, with a table of lighting control signals that correspond with data the processor **3600** receives. Once the processor **3600** receives data from the network, the processor may consult the table to select the control signals that correspond to the received data, and control the light sources of the lighting unit accordingly.

In one aspect of this embodiment, the processor **3600** of a given lighting unit, whether or not coupled to a network, may be configured to interpret lighting instructions/data that are received in a DMX protocol (as discussed, for example, in U.S. Pat. Nos. 6,016,038 and 6,211,626), which is a lighting command protocol conventionally employed in the lighting industry for some programmable lighting applications. However, it should be appreciated that lighting units suitable for purposes of the present invention are not limited in this respect, as lighting units according to various embodiments may be configured to be responsive to other types of communication protocols so as to control their respective light sources.

In other embodiments the processor **3600** may be an application specific integrated circuit, such as one configured to respond to instructions according to a protocol, such as the DMX protocol, Ethernet protocols, or serial addressing protocols where each ASIC responds to control instructions directed to it, based on the position of the ASIC in a string of similar ASICs.

In various implementations, a processor or controller may be associated with a data facility **3700**, which can comprise one or more storage media (generically referred to herein as "memory," e.g., volatile and non-volatile computer memory such as RAM, PROM, EPROM, and EEPROM, floppy disks, compact disks, optical disks, magnetic tape, etc.). In some implementations, the storage media may be encoded with one or more programs that, when executed on one or more processors and/or controllers, perform at least some of the functions discussed herein. Various storage media may be fixed within a processor or controller or may be transportable, such that the one or more programs stored thereon can be loaded into a processor or controller so as to implement various aspects of the present invention discussed herein.

In embodiments the data storage facility **3700** stores information relating to control of a lighting unit **102**. For example, the data storage facility may be memory employed to store one or more lighting programs for execution by the processor **3600** (e.g., to generate one or more control signals for the light sources), as well as various types of data useful for generating variable color radiation (e.g., calibration information, information relating to techniques for driving light sources **300**, information relating to addresses for lighting units **102**, information relating to effects run on lighting units **102**, and may other purposes as discussed further herein). The memory also may store one or more particular identifiers (e.g., a serial number, an address, etc.) that may be used either locally or on a system level to identify the lighting unit **102**. In various embodiments, such identifiers may be pre-programmed by a manufacturer or alterable by the manufacturer, for example, and may be either alterable or non-alterable thereafter (e.g., via some type of user interface located on the lighting unit, via one or more data or control signals received by the lighting unit, etc.). Alternatively, such identifiers may be determined at the time of initial use of the lighting unit in the field, and again may be alterable or non-alterable thereafter. The data storage facility **3700** may also be a disk, diskette, compact disk, random access memory, read only memory, SRAM, DRAM, database, data mart, data repository, cache, queue, or other facility for storing data, such as control instructions for a control facility **3500** for a lighting unit **102**. Data storage may occur locally with the lighting unit, in a socket or housing **800**, or remotely, such as on a server or in a remote database. In embodiments the data storage facility **3700** comprises a player that stores shows that can be triggered through a simple interface.

The drive facility **3800** may include drive hardware **3802** for driving one or more light sources **300**. In embodiments the drive hardware **3802** comprises a current sink, such as a switch **3900**, such as for turning on the current to a light source **300**. In embodiments the switch **3900** is under control of the processor **3600**, so that the switch **3900** can turn on or off in response to control signals. In embodiments the switch turns on and off in rapid pulses, such as in pulse width

modulation of the current to the LEDs, which results in changes in the apparent intensity of the LED, based on the percentage of the duty cycle of the pulse width modulation technique during which the switch is turned on.

The drive hardware **3802** may include a voltage regulator **4000** for controlling voltage to a light source, such as to vary the intensity of the light coming from the light source **300**.

The drive hardware **3802** may include a feed-forward drive circuit **4100** such as described in the patent applications incorporated herein by reference.

The drive hardware **3802** may include an inductive loop drive circuit **4200** such as in the patent applications incorporated herein by reference.

Various embodiments of the present invention are directed generally to methods and apparatus for providing and controlling power to at least some types of loads, wherein overall power efficiency typically is improved and functional redundancy of components is significantly reduced as compared to conventional arrangements. In different aspects, implementations of methods and apparatus according to various embodiments of the invention generally involve significantly streamlined circuits having fewer components, higher overall power efficiencies, and smaller space requirements.

In some embodiments, a controlled predetermined power is provided to a load without requiring any feedback information from the load (i.e., without monitoring load voltage and/or current). Furthermore, in one aspect of these embodiments, no regulation of load voltage and/or load current is required. In another aspect of such embodiments in which feedback is not required, isolation components typically employed between a DC output voltage of a DC-DC converter (e.g., the load supply voltage) and a source of power derived from an AC line voltage (e.g., a high DC voltage input to the DC-DC converter) in some cases may be eliminated, thereby reducing the number of required circuit components. In yet another aspect, eliminating the need for a feedback loop generally increases circuit speed and avoids potentially challenging issues relating to feedback circuit stability.

Based on the foregoing concepts, one embodiment of the present invention is directed to a "feed-forward" driver for an LED-based light source. Such a feed-forward driver combines the functionality of a DC-DC converter and a light source controller, and is configured to control the intensity of light generated by the light source based on modulating the average power delivered to the light source in a given time period, without monitoring or regulating the voltage or current provided to the light source. In one aspect of this embodiment, the feed-forward driver is configured to store energy to and release energy from an energy transfer device using a "discontinuous mode" switching operation. This type of switching operation facilitates the transfer of a predictable quantum of energy per switching cycle, and hence a predictable controlled power delivery to the light source.

In embodiments the drive hardware **3802** includes at least one energy transfer element to store input energy based on an applied input voltage and to provide output energy to a load at an output voltage. The drive hardware **3802** may include at least one switch coupled to the at least one energy transfer element to control at least the input energy stored to the at least one energy transfer element and at least one switch controller configured to control the at least one switch, wherein the at least one switch controller does not receive any feedback information relating to the load to control the at least one switch.

As shown in FIG. **1**, the lighting unit **102** also may include the processor **3600** that is configured to output one or more control signals to drive the light sources **300** so as to generate various apparent intensities of light from the light sources. For example, in one implementation, the processor **3600** may be configured to output at least one control signal for each light source so as to independently control the intensity of light generated by each light source. Some examples of control signals that may be generated by the processor to control the light sources include, but are not limited to, pulse modulated signals, pulse width modulated signals (PWM), pulse amplitude modulated signals (PAM), pulse displacement modulated signals, analog control signals (e.g., current control signals, voltage control signals), combinations and/or modulations of the foregoing signals, or other control signals. In one aspect, the processor **3600** may control other dedicated circuitry that in turn controls the light sources so as to vary their respective intensities.

Lighting systems in accordance with this specification can operate light sources **300** such as LEDs in an efficient manner. Typical LED performance characteristics depend on the amount of current drawn by the LED. The optimal efficacy may be obtained at a lower current than the level where maximum brightness occurs. LEDs are typically driven well above their most efficient operating current to increase the brightness delivered by the LED while maintaining a reasonable life expectancy. As a result, increased efficacy can be provided when the maximum current value of the PWM signal may be variable. For example, if the desired light output is less than the maximum required output the current maximum and/or the PWM signal width may be reduced. This may result in pulse amplitude modulation (PAM), for example; however, the width and amplitude of the current used to drive the LED may be varied to optimize the LED performance. In an embodiment, a lighting system may also be adapted to provide only amplitude control of the current through the LED. While many of the embodiments provided herein describe the use of PWM and PAM to drive the LEDs, one skilled in the art would appreciate that there are many techniques to accomplish the LED control described herein and, as such, the scope of the present invention is not limited by any one control technique. In embodiments, it is possible to use other techniques, such as pulse frequency modulation (PFM), or pulse displacement modulation (PDM), such as in combination with either or both of PWM and PAM.

Pulse width modulation (PWM) involves supplying a substantially constant current to the LEDs for particular periods of time. The shorter the time, or pulse-width, the less brightness an observer will observe in the resulting light. The human eye integrates the light it receives over a period of time and, even though the current through the LED may generate the same light level regardless of pulse duration, the eye will perceive short pulses as "dimmer" than longer pulses. The PWM technique is considered on of the preferred techniques for driving LEDs, although the present invention is not limited to such control techniques. When two or more colored LEDs are provided in a lighting system, the colors may be mixed and many variations of colors can be generated by changing the intensity, or perceived intensity, of the LEDs. In an embodiment, three colors of LEDs are presented (e.g., red, green and blue) and each of the colors is driven with PWM to vary its apparent intensity. This system allows for the generation of millions of colors (e.g., 16.7 million colors when 8-bit control is used on each of the PWM channels).

In an embodiment the LEDs are modulated with PWM as well as modulating the amplitude of the current driving the LEDs (Pulse Amplitude Modulation, or PAM). LED efficiency as a function of the input current increases to a maximum followed by decreasing efficiency. Typically, LEDs are driven at a current level beyond maximum efficiency to attain greater brightness while maintaining acceptable life expectancy. The objective is typically to maximize the light output from the LED while maintaining an acceptable lifetime. In an embodiment, the LEDs may be driven with a lower current maximum when lower intensities are desired. PWM may still be used, but the maximum current intensity may also be varied depending on the desired light output. For example, to decrease the intensity of the light output from a maximum operational point, the amplitude of the current may be decreased until the maximum efficiency is achieved. If further reductions in the LED brightness are desired the PWM activation may be reduced to reduce the apparent brightness.

One issue that may arise in connection with controlling multiple light sources **300** in the lighting unit **102**, and controlling multiple lighting units **102** in a lighting system relates to potentially perceptible differences in light output between substantially similar light sources. For example, given two virtually identical light sources being driven by respective identical control signals, the actual intensity of light output by each light source may be perceptibly different. Such a difference in light output may be attributed to various factors including, for example, slight manufacturing differences between the light sources, normal wear and tear over time of the light sources that may differently alter the respective spectrums of the generated radiation, etc. For purposes of the present discussion, light sources for which a particular relationship between a control signal and resulting intensity are not known are referred to as "uncalibrated" light sources.

The use of one or more uncalibrated light sources in the lighting unit **102** may result in generation of light having an unpredictable, or "uncalibrated," color or color temperature. For example, consider a first lighting unit including a first uncalibrated red light source and a first uncalibrated blue light source, each controlled by a corresponding control signal having an adjustable parameter in a range of from zero to 255 (0–255). For purposes of this example, if the red control signal is set to zero, blue light is generated, whereas if the blue control signal is set to zero, red light is generated. However, if both control signals are varied from non-zero values, a variety of perceptibly different colors may be produced (e.g., in this example, at very least, many different shades of purple are possible). In particular, perhaps a particular desired color (e.g., lavender) is given by a red control signal having a value of 125 and a blue control signal having a value of 200.

Now consider a second lighting unit including a second uncalibrated red light source substantially similar to the first uncalibrated red light source of the first lighting unit, and a second uncalibrated blue light source substantially similar to the first uncalibrated blue light source of the first lighting unit. As discussed above, even if both of the uncalibrated red light sources are driven by respective identical control signals, the actual intensity of light output by each red light source may be perceptibly different. Similarly, even if both of the uncalibrated blue light sources are driven by respective identical control signals, the actual intensity of light output by each blue light source may be perceptibly different.

With the foregoing in mind, it should be appreciated that if multiple uncalibrated light sources are used in combination in lighting units to produce a mixed colored light as discussed above, the observed color (or color temperature) of light produced by different lighting units under identical control conditions may be perceivably different. Specifically, consider again the "lavender" example above; the "first lavender" produced by the first lighting unit with a red control signal of 125 and a blue control signal of 200 indeed may be perceptibly different than a "second lavender" produced by the second lighting unit with a red control signal of 125 and a blue control signal of 200. More generally, the first and second lighting units generate uncalibrated colors by virtue of their uncalibrated light sources.

In view of the foregoing, in one embodiment of the present invention, the lighting unit **102** includes a calibration facility to facilitate the generation of light having a calibrated (e.g., predictable, reproducible) color at any given time. In one aspect, the calibration facility is configured to adjust the light output of at least some light sources of the lighting unit so as to compensate for perceptible differences between similar light sources used in different lighting units.

For example, in one embodiment, the processor **3600** of the lighting unit **102** is configured to control one or more of the light sources **300** so as to output radiation at a calibrated intensity that substantially corresponds in a predetermined manner to a control signal for the light source(s). As a result of mixing radiation having different spectra and respective calibrated intensities, a calibrated color is produced. In one aspect of this embodiment, at least one calibration value for each light source is stored in the data facility **3700**, and the processor **3600** is programmed to apply the respective calibration values to the control signals for the corresponding light sources so as to generate the calibrated intensities.

In one aspect of this embodiment, one or more calibration values may be determined once (e.g., during a lighting unit manufacturing/testing phase) and stored in memory **3700** for use by the processor **3600**. In another aspect, the processor **3600** may be configured to derive one or more calibration values dynamically (e.g. from time to time) with the aid of one or more photosensors, for example. In various embodiments, the photosensor(s) may be one or more external components coupled to the lighting unit, or alternatively may be integrated as part of the lighting unit itself. A photosensor is one example of a signal source that may be integrated or otherwise associated with the lighting unit **102**, and monitored by the processor **3600** in connection with the operation of the lighting unit. Other examples of such signal sources are discussed further below, in connection with the signal source **8400**.

One exemplary method that may be implemented by the processor **3600** to derive one or more calibration values includes applying a reference control signal to a light source, and measuring (e.g., via one or more photosensors) an intensity of radiation thus generated by the light source. The processor may be programmed to then make a comparison of the measured intensity and at least one reference value (e.g., representing an intensity that nominally would be expected in response to the reference control signal). Based on such a comparison, the processor may determine one or more calibration values for the light source. In particular, the processor may derive a calibration value such that, when applied to the reference control signal, the light source outputs radiation having an intensity that corresponds to the reference value (i.e., the "expected" intensity).

In various aspects, one calibration value may be derived for an entire range of control signal/output intensities for a

given light source. Alternatively, multiple calibration values may be derived for a given light source (i.e., a number of calibration value "samples" may be obtained) that are respectively applied over different control signal/output intensity ranges, to approximate a nonlinear calibration function in a piecewise linear manner.

Referring to FIG. **25***c*, typically an LED produces a narrow emission spectrum centered on a particular wavelength; i.e. a fixed color. Through the use of multiple LEDs and additive color mixing a variety of apparent colors can be produced, as described elsewhere herein.

In conventional LED-based light systems, constant current control is often preferred because of lifetime issues. Too much current can destroy an LED or curtail useful life. Too little current produces little light and is an inefficient or ineffective use of the LED.

The light output from a semiconductor illuminator may shift in wavelength as a result in changes in current. In general, the shift in output has been thought to be undesirable for most applications, since a stable light color is often preferred to an unstable one. Recent developments in LED light sources with higher power ratings (>100 mA) have made it possible to operate LED systems effectively without supplying maximum current. Such operational ranges make it possible to provide LED-based lighting units **102** that have varying wavelength outputs as a function of current. Thus, different wavelengths of light can be provided by changing the current supplied to the LEDs to produce broader bandwidth colors (potentially covering an area, rather than just a point, in the chromaticity diagram of FIG. **26**), and to produce improved quality white light. This calibration technique not only changes the apparent intensity of the LEDs (reflecting the portion of the duty cycle of a pulse width modulation signal during which the LED is on as compared to the portion during which it is off), but also shifting the output wavelength or color. Current change can also broaden the narrow emission of the source, shifting the saturation of the light source towards a broader spectrum source. Thus, current control of LEDs allows controlled shift of wavelength for both control and calibration purposes.

In the visible spectrum, roughly 400 to 700 nm, the sensitivity of the eye varies according to wavelength. The sensitivity of the eye is least at the edges of that range and peaks at around 555 nm in the middle of the green.

Referring to FIG. **25***b*, a schematic diagram shows pulse shapes for a PWM signal. By rapidly changing the current and simultaneously adjusting the intensity via PWM, a broader spectrum light source can be produced. FIG. **25***b* shows two PWM signals. The two PWM signals vary both in current level and width. The top one has a narrower pulse-width, but a higher current level than the bottom one. The result is that the narrower pulse offsets the increased current level in the top signal. As a result, depending on the adjustment of the two factors (on-time and current level) both light outputs could appear to be of similar brightness. The control is a balance between current level and the on time. FIG. **25***a* shows an embodiment of a drive facility **3800** for simultaneous current control and on-off control under the control of a processor **3600**.

Controlled spectral shifting can also be used to adjust for differences between light sources **300**, such as differences between individual light sources **300** from the same vendor, or different lots, or "bins," of light sources **300** from different vendors, such as to produce lighting units **102** that produce consistent color and intensity from unit to unit, notwithstanding the use of different kinds of light sources **300** in the respective lighting units **102**.

FIG. **25***c* shows the effect of changing both the current and adjusting the PWM for the purposes of creating a better quality white by shifting current and pulse-widths simultaneously and then mixing multiple sources, such as RG & B, to produce a high quality white. The spectrum is built up by rapidly controlling the current and on-times to produce multiple shifted spectra. Thus, the original spectrum is shifted to a broader-spectrum by current shifts, while coordinated control of intensity is augmented by changes in PWM.

Current control can be provided with various embodiments, including feedback loops, such as using a light sensor as a signal source **8400**, or a lookup table or similar facility that stores light wavelength and intensity output as a function of various combinations of pulse-width modulation and pulse amplitude modulation.

In embodiments, a lighting system can produce saturated colors for one purpose (entertainment, mood, effects), while for another purpose it can produce a good quality variable white light whose color temperature can be varied along with the spectral properties. Thus a single fixture can have narrow bandwidth light sources for multicolor light applications and then can change to a current and PWM control mode to get broad spectra to make good white light or non-white light with broader spectrum color characteristics. In addition, the control mode can be combined with various optical facilities **400** described above to further control the light output from the system. In embodiments, the methods and systems can include a control loop and fast current sources to allow an operator to sweep about a broad spectrum. This could be done in a feed-forward system or with feedback to insure proper operation over a variety of conditions.

The control facility **3500** can switch between a current-control mode **2502** (which itself could be controlled by a PWM stream) and a separate PWM mode **2504**. Such a system can include simultaneous current control via PWM for wavelength and PWM control balanced to produce desired output intensity and color. FIG. **25***a* shows a schematic diagram with one possible embodiment for creating the two control signals from a controller, such as a microprocessor to control one or more LEDs in a string. Multiple such strings can be used to create a light fixture that can vary in color (HSB) and spectrum based on the current and on-off control. The PWM signal can also be a PWM Digital-to-analog converter (DAC) such as those from Maxim and others. Note that the functions that correspond to particular values of output can be calibrated ahead of time by determining nominal values for the PWM signals and the resultant variations in the LED output. These can be stored in lookup tables or a function created that allows the mapping of desired values from LED control signals.

It may even be desirable to overdrive the LEDs. Although the currents would be above nominal operating parameters as described by the LED manufacturers, this can provide more light than normally feasible. The power source will also be drained faster, but the result can be a much brighter light source.

Modulation of lighting units **102** can include a data facility **3700**, such as a look-up table, that determines the current delivered to light sources **300** based on predetermined values stored in the data facility **3700** based on inputs, which may include inputs from signal sources **8400**, sensors, or the like.

It is also possible to drive light sources **300** with constant current, such as to produce a single color of light.

The methods and systems disclosed herein also include a variety of methods and systems for light control, including central control facilities **3500** as well as control facilities that are local to lighting units **102**. One grouping of control facilities **3500** includes dimmer controls, including both wired and wireless dimmer control. Traditional dimmers can be used with lighting units **102**, not just in the traditional way using voltage control or resistive load, but rather by using a processor to scale and control output by interpreting the levels of voltage. In combination with a style and interface that is familiar to most people because of the ubiquity of dimmer switches, one aspect of the present specification allows the position of a dimmer switch (linear or rotary) to indicate color temperature or intensity through a power cycle control. That is, the mode can change with each on or off cycle. A special switch can allow multiple modes without having to turn off the lights. An example of a product that uses this technique is the Color Dial, available from Color Kinetics.

Referring to FIG. **26**, a chromaticity diagram shows a range of colors that can be viewed by the human eye. The gamut **2614** defines the range of colors that it is possible to produce by additively mixing colors from multiple sources, such as three LEDs. Green LEDs produce light in a green region **2612**, red LEDs produce light in a red region **2618** and blue LEDs produce light in a blue region **2620**. Mixing these colors produces mixed light output, such as in the overlapping areas between the regions, including those for orange, purple and other mixed light colors. Mixing all three sources produces white light, such as along a black body curve **1310**. Different mixtures produce different color temperatures of white light along or near the black body curve **2610**. Typically an LED produces a narrow emission spectrum centered on a particular wavelength; i.e. a fixed color and a single point on the chromaticity diagram. Through the use of multiple LEDs and additive color mixing a variety of apparent colors can be produced. In embodiments the gamut **2614** may be determined by a program stored on the data storage facility **3700**, rather than by the light output capacities of light sources **300**. For example, a more limited gamut **2614** may be defined to ensure that the colors within the gamut **2614** can be consistently produced by all light sources **300** across a wide range of lighting units **102**, even accounting for lower quality light sources **300**. Thus, such a program can improve consistency of lighting units **102** from unit to unit.

The photopic response of the human eye varies across different colors for a given intensity of light radiation. For example, the human eye may tend to respond more effectively to green light than to blue light of the same intensity. As a result, a lighting unit **102** may seem dimmer if turned on blue than the same lighting unit **102** seems when turned on green. However, in installations of multiple lighting units **102**, users may desire that different lighting units **102** have similar intensities when turned on, rather than having some lighting units **102** appear dim while others appear bright. A program can be stored on a data storage facility **3700** for use by the processor **3600** to adjust the pulses of current delivered to the light sources **300** (and in turn the apparent intensity of the light sources) based on the predicted photopic response of the human eye to the color of light that is called for by the processor **3600** at any given time. A lookup table or similar facility can associate each color with a particular intensity scale, so that each color can be scaled relative to all others in apparent intensity. The result is that lighting units **102** can be caused to deliver light output along isoluminance curves (similar to topographic lines on a map) throughout the gamut **2614**, where each curve represents a common level of apparent light output of the lighting unit **102**. The program can account for the particular spectral output characteristics of the types of light sources **300** that make up a particular type of lighting unit **102** and can account for differences in the light sources **300** between different lighting units **102**, so that lighting units **102** using different light sources **300**, such as from different vendors, can nevertheless provide light output of consistent intensity at any given color.

A control interface **4900** may be provided for a lighting unit **102**. The interface can vary in complexity, ranging from having minimal control, such as "on-off" control and dimming, to much more extensive control, such as producing elaborate shows and effects using a graphical user interface for authoring them and using network systems to deliver the shows and effects to lighting units **102** deployed in complex geometries.

Referring to FIG. **27***a*, it is desirable to provide a light system manager **5000** to manage a plurality of lighting units **102** or light systems **100**.

Referring to FIG. **27***b*, the light system manager **5000** is provided, which may consist of a combination of hardware and software components. Included is a mapping facility **5002** for mapping the locations of a plurality of light systems. The mapping facility may use various techniques for discovering and mapping lights, such as described herein or as known to those of skill in the art. Also provided is a light system composer **5004** for composing one or more lighting shows that can be displayed on a light system. The authoring of the shows may be based on geometry and an object-oriented programming approach, such as the geometry of the light systems that are discovered and mapped using the mapping facility, according to various methods and systems disclosed herein or known in the art. Also provided is a light system engine, for playing lighting shows by executing code for lighting shows and delivering lighting control signals, such as to one or more lighting systems, or to related systems, such as power/data systems, that govern lighting systems. Further details of the light system manager **5000**, mapping facility **5002**, light system composer **5004** and light system engine **5008** are provided herein.

The light system manager **5000**, mapping facility **5002**, light system composer **5004** and light system engine **5008** may be provided through a combination of computer hardware, telecommunications hardware and computer software components. The different components may be provided on a single computer system or distributed among separate computer systems.

Referring to FIG. **28**, in an embodiment, the mapping facility **5002** and the light system composer **5004** are provided on an authoring computer **5010**. The authoring computer **5010** may be a conventional computer, such as a personal computer. In embodiments the authoring computer **5010** includes conventional personal computer components, such as a graphical user interface, keyboard, operating system, memory, and communications capability. In embodiments the authoring computer **5010** operates with a development environment with a graphical user interface, such as a Windows environment. The authoring computer **5010** may be connected to a network, such as by any conventional communications connection, such as a wire, data connection, wireless connection, network card, bus, Ethernet connection, Firewire, 802.11 facility, Bluetooth, or other connection. In embodiments, such as in FIG. **28**, the authoring computer **5010** is provided with an Ethernet connection, such as via an Ethernet switch **5102**, so that it

can communicate with other Ethernet-based devices, optionally including the light system engine **5008**, a light system itself (enabled for receiving instructions from the authoring computer **5010**), or a power/data supply (PDS) **1758** that supplies power and/or data to a light system **100** comprised of one or more lighting units **102**. The mapping facility **5002** and the light system composer **5004** may comprise software applications running on the authoring computer **5010**.

Referring still to FIG. **28**, in an architecture for delivering control systems for complex shows to one or more light systems, shows that are composed using the authoring computer **5010** are delivered via an Ethernet connection through one or more Ethernet switches to the light system engine **5008**. The light system engine **5008** downloads the shows composed by the light system composer **5004** and plays them, generating lighting control signals for light systems. In embodiments, the lighting control signals are relayed by an Ethernet switch to one or more power/data supplies and are in turn relayed to light systems that are equipped to execute the instructions, such as by turning LEDs on or off, controlling their color or color temperature, changing their hue, intensity, or saturation, or the like. In embodiments the power/data supply may be programmed to receive lighting shows directly from the light system composer **5004**. In embodiments a bridge may be programmed to convert signals from the format of the light system engine **5008** to a conventional format, such as DMX or DALI signals used for entertainment lighting.

Referring to FIG. **29**, in embodiments the lighting shows composed using the light system composer **5004** are compiled into simple scripts that are embodied as XML documents. The XML documents can be transmitted rapidly over Ethernet connections. In embodiments, the XML documents are read by an XML parser of the light system engine **5008**. Using XML documents to transmit lighting shows allows the combination of lighting shows with other types of programming instructions. For example, an XML document type definition may include not only XML instructions for a lighting show to be executed through the light system engine **5008**, but also XML with instructions for another computer system, such as a sound system, and entertainment system, a multimedia system, a video system, an audio system, a sound-effect system, a smoke effect system, a vapor effect system, a dry-ice effect system, another lighting system, a security system, an information system, a sensor-feedback system, a sensor system, a browser, a network, a server, a wireless computer system, a building information technology system, or a communication system.

Thus, methods and systems provided herein include providing a light system engine for relaying control signals to a plurality of light systems, wherein the light system engine plays back shows. The light system engine **5008** may include a processor, a data facility, an operating system and a communication facility. The light system engine **5008** may be configured to communicate with a DALI or DMX lighting control facility. In embodiments, the light system engine communicates with a lighting control facility that operates with a serial communication protocol. In embodiments the lighting control facility is a power/data supply for a lighting unit **102**.

In embodiments, the light system engine **5008** executes lighting shows downloaded from the light system composer **5004**. In embodiments the shows are delivered as XML files from the light system composer **5004** to the light system engine **5008**. In embodiment the shows are delivered to the light system engine over a network. In embodiments the shows are delivered over an Ethernet facility. In embodiments the shows are delivered over a wireless facility. In embodiments the shows are delivered over a Firewire facility. In embodiments shows are delivered over the Internet.

In embodiments lighting shows composed by the light system composer **5004** can be combined with other files from another computer system, such as one that includes an XML parser that parses an XML document output by the light system composer **5004** along with XML elements relevant to the other computer. In embodiments lighting shows are combined by adding additional elements to an XML file that contains a lighting show. In embodiments the other computer system comprises a browser and the user of the browser can edit the XML file using the browser to edit the lighting show generated by the lighting show composer. In embodiments the light system engine **5008** includes a server, wherein the server is capable of receiving data over the Internet. In embodiments the light system engine **5008** is capable of handling multiple zones of light systems, wherein each zone of light systems has a distinct mapping. In embodiments the multiple zones are synchronized using the internal clock of the light system engine **5008**.

The methods and systems included herein include methods and systems for providing a mapping facility **5002** of the light system manager **5000** for mapping locations of a plurality of light systems. In embodiments, the mapping system discovers lighting systems in an environment, using techniques described above. In embodiments, the mapping facility then maps light systems in a two-dimensional space, such as using a graphical user interface.

In embodiments of the invention, the light system engine **5008** comprises a personal computer with a Linux operating system. In embodiments the light system engine is associated with a bridge to a DMX or DALI system.

A light system **100** may include a network interface **4902** for delivering data from a control facility **3500** to one or more light systems **100**, which may include one or more lighting units **102**. The term "network" as used herein refers to any interconnection of two or more devices (including controllers or processors) that facilitates the transport of information (e.g. for device control, data storage, data exchange, etc.) between any two or more devices and/or among multiple devices coupled to the network. As should be readily appreciated, various implementations of networks suitable for interconnecting multiple devices may include any of a variety of network topologies and employ any of a variety of communication protocols. Additionally, in various networks according to the present invention, any one connection between two devices may represent a dedicated connection between the two systems, or alternatively a non-dedicated connection. In addition to carrying information intended for the two devices, such a non-dedicated connection may carry information not necessarily intended for either of the two devices (e.g., an open network connection). Furthermore, it should be readily appreciated that various networks of devices as discussed herein may employ one or more wireless, wire/cable, and/or fiber optic links to facilitate information transport throughout the network.

FIG. **28** illustrates one of many possible examples of a networked lighting system **100** in which a number of lighting units **102** are coupled together to form the networked lighting system. FIG. **30** depicts another networked configuration for a lighting system **100**.

The networked lighting system **100** may be configured flexibly to include one or more user interfaces **4908**, as well as one or more signal sources **8400** such as sensors/transducers **8402**. For example, one or more user interfaces and/or one or more signal sources such as sensors/transduc-

ers **8402** (as discussed above in connection with FIG. **2**) may be associated with any one or more of the lighting units **102** of the networked lighting system **100**. Alternatively (or in addition to the foregoing), one or more user interfaces **4908** and/or one or more signal sources **8400** may be implemented as "stand alone" components in the networked lighting system **100**. Whether stand alone components or particularly associated with one or more lighting units **102**, these devices may be "shared" by the lighting units of the networked lighting system **100**. Stated differently, one or more user interfaces **4908** and/or one or more signal sources **8400** such as sensors/transducers **8402** may constitute "shared resources" in the networked lighting system **100** that may be used in connection with controlling any one or more of the lighting units **102** of the system **100**.

The lighting system **100** may include one or more lighting unit controllers (LUCs) **3500***a*, **3500***b*, **3500***c*, **3500***d* for lighting units **102**, wherein each LUC is responsible for communicating with and generally controlling one or more lighting units **102** coupled to it. Different numbers of lighting units **102** may be coupled to a given LUC in a variety of different configurations using a variety of different communication media and protocols.

Each LUC in turn may be coupled to a central control facility **3500** that is configured to communicate with one or more LUCs. Although FIG. **2** shows four LUCs coupled to the central controller **3500** via a switching or coupling device **3004**, it should be appreciated that according to various embodiments, different numbers of LUCs may be coupled to the central controller **3500**. Additionally, according to various embodiments of the present invention, the LUCs and the central controller **3500** may be coupled together in a variety of configurations using a variety of different communication media and protocols to form the networked lighting system **100**. Moreover, it should be appreciated that the interconnection of LUCs **3500***a*, **3500***b*, **3500***c*, **3500***d* and the central controller **3500**, and the interconnection of lighting units **102** to respective LUCs, may be accomplished in different manners (e.g., using different configurations, communication media, and protocols).

For example, according to one embodiment of the present invention, the central controller **3500** shown in FIG. **30** may be configured to implement Ethernet-based communications with the LUCs, and in turn the LUCs may be configured to implement DMX-based communications with the lighting units **102**. In particular, in one aspect of this embodiment, each LUC may be configured as an addressable Ethernet-based controller and accordingly may be identifiable to the central controller **3500** via a particular unique address (or a unique group of addresses) using an Ethernet-based protocol. In this manner, the central controller **3500** may be configured to support Ethernet communications throughout the network of coupled LUCs, and each LUC may respond to those communications intended for it. In turn, each LUC may communicate lighting control information to one or more lighting units coupled to it, for example, via a DMX protocol, based on the Ethernet communications with the central controller **3500**.

More specifically, according to one embodiment, the LUCs **3500***a*, **3500***b*, **3500***c* and **3500***d* shown in FIG. **30** may be configured to be "intelligent" in that the central controller **3500** may be configured to communicate higher level commands to the LUCs that need to be interpreted by the LUCs before lighting control information can be forwarded to the lighting units **102**. For example, a lighting system operator may want to generate a color changing effect that varies colors from lighting unit to lighting unit in such a way as to generate the appearance of a propagating rainbow of colors ("rainbow chase"), given a particular placement of lighting units with respect to one another. In this example, the operator may provide a simple instruction to the central controller **3500** to accomplish this, and in turn the central controller may communicate to one or more LUCs using an Ethernet-based protocol high-level command to generate a "rainbow chase." The command may contain timing, intensity, hue, saturation or other relevant information, for example. When a given LUC receives such a command, it may then interpret the command so as to generate the appropriate lighting control signals which it then communicates using a DMX protocol via any of a variety of signaling techniques (e.g., PWM) to one or more lighting units that it controls.

It should again be appreciated that the foregoing example of using multiple different communication implementations (e.g., Ethernet/DMX) in a lighting system according to one embodiment of the present invention is for purposes of illustration only, and that the invention is not limited to this particular example.

In embodiments the central controller **3500** may be a network controller that controls other functions, such as a home network, business enterprise network, building network, or other network.

In embodiments a switch, such as a wall switch, can include a processor **3600**, memory **3700** and a communications port for receiving data. The switch can be linked to a network, such as an office network, Internet, or home network. Each switch can be an intelligent device that responds to communication signals via the communications port to provide control of any lighting units **102** from any location where another switch or intelligent device may be located. Such a switch can be integrated through smart interfaces and networks to trigger shows (such as using a lighting control player, such as iPlayer 2 available from Color Kinetics) as with a lighting controller such as a ColorDial from Color Kinetics. Thus, the switch can be programmed with light shows to create various aesthetic, utilitarian or entertainment effects, of white or non-white colors. In embodiments, an operator of a system can process, create or download shows, including from an external source such as the Internet. Shows can be sent to the switch over a communication facility of any kind. Various switches can be programmed to play back and control any given lighting unit **102**. In embodiments, settings can be controlled through a network or other interface, such as a web interface.

A switch with a processor **3600** and memory **3700** can be used to enable upgradeable lighting units **102**. Thus, lighting units **102** with different capabilities, shows, or features can be supplied, allowing users to upgrade to different capabilities, as with different versions of commercial software programs. Upgrade possibilities include firmware to add features, fix bugs, improve performance, change protocols, add capability and provide compatibility, among others.

In embodiments a control facility **3500** may be based on stored modes and a power cycle event. The operator can store modes for lighting control, such as on a memory **3700**. The system can then look for a power event, such as turning the power on or off. When there is a power event the system changes mode. The mode can be a resting mode, with no signal to the lighting unit **102**, or it can be any of a variety of different modes, such as a steady color change, a flashing mode, a fixed color mode, or modes of different intensity. Modes can include white and non-white illumination modes. The modes can be configured in a cycle, so that upon a mode

change, the next stored mode is retrieved from memory **3700** and signals for that mode are delivered to the lighting unit **102**, such as using a switch, slide, dial, or dimmer. The system can take an input signal, such as from the switch. Depending on the current mode, the input signal from the switch can be used to generate a different control signal. For example, if the mode is a steady color change, the input from the dimmer could accelerate of decelerate the rate of change. If the mode were a single color, then the dimmer signal could change the mode by increasing or decreasing the intensity of light. Of course, system could take multiple inputs from multiple switches, dials, dimmers, sliders or the like, to provide more modulation of the different modes. Finally, the modulated signal can be sent to the lighting unit **102**.

In embodiments a system with stored modes can take input, such as from a signal source **8400**, such as a sensor, a computer, or other signal source. The system can determine the mode, such as based on a cycle of modes, or by recalling modes from memory, including based on the nature of the signal from the signal source **8400**. Then system can generate a control signal for a lighting unit, based on the mode.

Referring to FIG. **31***a*, the methods and systems disclosed herein may further comprise disposing a plurality of lighting units **102** in a serial configuration and controlling all of them by a stream of data to respective processors **3600**, such as ASICS, of each of them, wherein each lighting unit **102** responds to the first unmodified bit of data in the stream, modifies that bit of data, and transmits the stream to the next ASIC. Using such a serial addressing protocol, data can be addressed to lighting units **102** based on their location in a series of lighting units **102**, rather than requiring knowledge of the exact physical location of each lighting unit **102**.

Methods and system provided herein also include providing a self-healing lighting system, which may include providing a plurality of lighting units in a system, each having a plurality of light sources; providing at least one processor associated with at least some of the lighting units for controlling the lighting units; providing a network facility for addressing data to each of the lighting units; providing a diagnostic facility for identifying a problem with a lighting unit; and providing a healing facility for modifying the actions of at least one processor to automatically correct the problem identified by the diagnostic facility.

A lighting unit controller according to the present invention may include a unique address such that the **208** can be identified and communicated with. The LUC may also include a universe address such that the lighting unit controller can be grouped with other controllers or systems and addressed information can be communicated to the group of systems. The lighting unit controller may also have a broadcast address, or otherwise listen to general commands provided to many or all associated systems.

Referring to FIG. **31***b*, the network interface **4900** may include a network topology with a control facility **3500** and multiple lighting units **102** disposed on the network in a hub-router configuration. Referring to FIG. **31***c*, the lighting units **102** can be disposed along a high-speed serial bus for receiving control signals from a data facility **3500**.

A lighting unit **102** may include a physical data interface **4904** for receiving data, such as from another lighting unit **102**, from a signal source **8400**, from a user interface **4902**, or from a control facility **3500**. Referring to FIG. **32**, the lighting unit **102** may include one or more communication ports **4904** to facilitate coupling of the lighting unit **102** to any of a variety of other devices. For example, one or more communication ports **4904** may facilitate coupling multiple lighting units together as a networked lighting system, in which at least some of the lighting units are addressable (e.g., have particular identifiers or addresses) and are responsive to particular data transported across the network.

In embodiments the communication port **4904** can receive a data cable, such as a standard CAT 5 cable type used for networking. Thus, the lighting unit **102** can receive data, such as from a network. By allowing connection of the lighting unit **102** to a communications port **4904**, the system allows a lighting designer or installer to send data to a plurality of lighting units **102** to put them in common modes of control and illumination, providing more consistency to the lighting of the overall environment.

FIG. **33** shows various embodiments of physical data interfaces **4902**. FIG. **33***a* shows an embodiment arranged in a wireless network arrangement, using a wireless data interface as the physical data interface, such as a radio frequency interface, infrared interface, Bluetooth interface, 802.11 interface, or other wireless interface. In embodiments the wireless arrangement is a peer-to-peer arrangement. In embodiments such as FIG. **33***b*, the arrangement is a master-slave arrangement, where on lighting unit **102** controls other lighting units **102** in close proximity. FIG. **33***c* a retrofit lighting unit **102** with a communication port **4904**. FIG. **33***e* shows a socket **3302** or fixture for receiving a lighting unit **102**. In this case the socket **3302** includes a processor **3600**, such as to providing control signals to the lighting unit **102**. The socket **3600** can be connected to a control interface **4900**, such as a network, so that it can receive signals, such as from a control facility **3500**. Thus, the socket **3302** can serve as a lighting unit controller. By placing control in the socket **3302**, it is possible for a lighting designer or installer to provide control signals to a known location, regardless of what bulbs are removed or replaced into the socket **3302**. Thus, an environmental lighting system can be arranged by the sockets **3302**, then any different lighting units **102** can be installed, responsive to control signals sent to the respective sockets **3302**. Sockets **3302** can be configured to receive any kind of light bulb, including incandescent, fluorescent, halogen, metal halide, LED-based lights, or the like. Thus, intelligence can be provided by the processor **3600** to a conventional socket. In embodiments, data can be provided over power lines, thus avoiding the need to rewire the environment, using power line carrier techniques as known in the art, the X10 system being one such example, and the HomeTouch system being another.

In the preceding embodiments, a fixture or network can give a lighting unit **102** a command to set to a particular look including, color, color temperature, intensity, saturation, and spectral properties. Thus, when the designer sets the original design he or she may specify a set of particular light bulb parameters so that when a lighting unit **102** is replaced the fixture or network can perform a startup routine that initializes that lighting unit **102** to a particular set of values which are then controlled. In embodiments, the lighting unit **102** identifies itself to the network when the power is turned on. The lighting unit **102** or fixture or socket **3302** can be assigned an address by the central control facility **3500**, via a network interface **4900**. Thus, there is an address associated with the fixture or socket **3302**, and the lighting unit **102** control corresponds to that address. The lighting unit **102** parameters can be set in memory **3700**, residing in either the lighting unit **102**, socket **3302** or fixture, cable termination **3304** or in a central control facility **3500**. The lighting unit **102** can now be set to those parameters. From then on, when

the lighting unit **102** is powered up it receives a simple command value already set within the set of parameters chosen by the designer.

As used herein, the terms "wired" transmission and or communication should be understood to encompass wire, cable, optical, or any other type of communication where the devices are physically connected. As used herein, the terms "wireless" transmission and or communication should be understood to encompass acoustical, RF, microwave, IR, and all other communication and or transmission systems were the devices are not physically connected.

Referring to FIG. **33***e*, the physical data interface **4904** can include a processor included in an end of a cable **3304**, so that the cable itself is a lighting unit controller, such as to ensure that as lighting units **102** are replaced, any lighting unit attached to that cable **3304** will respond to signals intended to be addressed to locations of that cable. **3304**. This is helpful in environments like airline cabins, where maintenance staff may not have time to enter address information for replacement lighting units **102** when earlier units fail.

A lighting unit **102** can respond to input from a user interface **4908**. The term "user interface" as used herein refers to an interface between a human user or operator and one or more devices that enables communication between the user and the device(s). Examples of user interfaces that may be employed in various implementations of the present invention include, but are not limited to, switches, human-machine interfaces, operator interfaces, potentiometers, buttons, dials, sliders, a mouse, keyboard, keypad, various types of game controllers (e.g., joysticks), track balls, display screens, various types of graphical user interfaces (GUIs), touch screens, microphones and other types of sensors that may receive some form of human-generated stimulus and generate a signal in response thereto.

In another aspect, as also shown in FIG. **2**, the lighting unit **102** optionally may include one or more user interfaces **4908** that are provided to facilitate any of a number of user-selectable settings or functions (e.g., generally controlling the light output of the lighting unit **102**, changing and/or selecting various pre-programmed lighting effects to be generated by the lighting unit, changing and/or selecting various parameters of selected lighting effects, setting particular identifiers such as addresses or serial numbers for the lighting unit, etc.). In various embodiments, the communication between the user interface **4908** and the lighting unit may be accomplished through wire or cable, or wireless transmission.

In one implementation, the processor **3600** of the lighting unit monitors the user interface **4908** and controls one or more of the light sources **300** based at least in part on a user's operation of the interface. For example, the processor **3600** may be configured to respond to operation of the user interface by originating one or more control signals for controlling one or more of the light sources. Alternatively, the processor **3600** may be configured to respond by selecting one or more pre-programmed control signals stored in memory, modifying control signals generated by executing a lighting program, selecting and executing a new lighting program from memory, or otherwise affecting the radiation generated by one or more of the light sources.

In particular, in one implementation, the user interface **4908** may constitute one or more switches (e.g., a standard wall switch) that interrupt power to the processor **3600**. In one aspect of this implementation, the processor **3600** is configured to monitor the power as controlled by the user interface, and in turn control one or more of the light sources **300** based at least in part on a duration of a power interruption caused by operation of the user interface. As discussed above, the processor may be particularly configured to respond to a predetermined duration of a power interruption by, for example, selecting one or more pre-programmed control signals stored in memory, modifying control signals generated by executing a lighting program, selecting and executing a new lighting program from memory, or otherwise affecting the radiation generated by one or more of the light sources.

Referring to FIG. **34** simple user interfaces can be used to trigger control signals. FIG. **34***a* shows a push button **3402** that triggers stored modes when pressed. FIG. **34***b* and FIG. **34***c* show user interfaces **4908** involving slides **3404** that can change the intensity or color, depending on the mode. A dual slide is shown in FIG. **34***c*, where one slide **3404** can adjust color and the other can adjust intensity, or the like. FIG. **34***d* and FIG. **34***e* show dials **3408**. The dial can trigger stored modes or adjust color or intensity of light. The dual-dial embodiment of FIG. **34***e* can include one dial for color and another for intensity. FIG. **34***f* shows a dial **3408** that includes a processor **3600** and memory **3700**, so that the user interface can provide basic instructions, such as for stored modes, but the user interface **4908** also reacts to instructions from a central control facility **3500**. FIG. **34***g* shows a dipswitch **3410**, which can beg used to set simple modes of a lighting unit **102**. FIG. **34***h* shows a microphone **3412**, such as for a voice recognition facility interface to a lighting unit **102**, such as to trigger lighting by voice interaction. In embodiments such as FIG. **34***a*, the slide can provide voltage input to a lighting unit **102**, and the switch can allow the user to switch between modes of operation, such as by selecting a color wash, a specific color or color temperature, a flashing series of colors, or the like.

In various embodiments the slides, switches, dials, dipswitches and the like can be used to control a wide range of variables, such as color, color temperature, intensity, hue, and triggering of lighting shows of varying attributes.

In other embodiments of the present invention it may be desirable to limit user control. Lighting designers, interior decorators and architects often prefer to create a certain look to their environment and wish to have it remain that way over time. Unfortunately, over time, the maintenance of an environment, which includes light bulb replacement, often means that a lighting unit, such as a bulb, is selected whose properties differ from the original design. This may include differing wattages, color temperatures, spectral properties, or other characteristics. It is desirable to have facilities for improving the designer's control over future lighting of an environment.

Referring to FIG. **34***i*, in embodiments a dial allows a user to select one or more colors or color temperatures from a scale **3414**. For example, the scale **3414** cand include different color temperatures of white light. The lighting designer can specify use of a particular color temperature of light, which the installer can select by setting the right position on the scale **3414** with the dial. A slide mechanism can be used like the dial to set a particular color temperature of white light, or to select a particular color of non-white light, in either case on a scale. Again, the designer can specify a particular setting, and the installer can set it according to the design plan. Providing adjustable lighting units **102** offers designers and installers much greater control over the correct maintenance of the lighting of the environment.

In embodiments, the fixture, socket **3302** or lighting unit **102** can command color setting at installation, either a new

setting or a fine adjustment to provide precise color control. In embodiments, the lighting unit **102** allows color temperature control as described elsewhere. The lighting unit **102** is settable, but the fixture itself stores an instruction or value for the setting of a particular color temperature or color. Since the fixture is set, the designer or architect can insure that all settable lighting units **102** will be set correctly when they are installed or replaced. An addressable fixture can be accomplished through a cable connection where the distal end of the cable, at the fixture, has a value programmed or set. The value is set through storage in memory **3700** or over the power lines. A physical connection can be made with a small handheld device, such as a Zapi available from Color Kinetics, to create and set the set of parameters for that fixture and others. If the environment changes over time, as for example during a remodeling, then those values can be updated and changed to reflect a new look for the environment. A person could either go from fixture to fixture to reset those values or change those parameters remotely to set an entire installation quickly. Once the area is remodeled or repainted, as in the lobby of a hotel for example, the color temperature or color can be reset and, for example, have all lighting units **102** in the lobby set to white light of 3500K. Then, in the future, is any lighting unit **102** is replaced or upgraded, any bulb plugged in can be set to that new value. Changes to the installation parameters can be done in various ways, such as by network commands, or wireless communication, such as RF or IR communication.

In various embodiments, the setting can occur in the fixture or socket **3302**, in the distal end of a cable **3304**, in the proximal end of the cable **3304**, or in a central control facility **3500**. The setting can be a piece of memory **3700** embedded in any of those elements with a facility for reading out the data upon startup of the lighting unit **102**.

In other embodiments it may be desirable to prevent or deter user adjustment. A lighting unit **102** can be programmed to allow adjustment and changes to parameters by a lighting designer or installer, but not by other users. Such systems can incorporate a lockout facility to prevent others from easily changing the settings. This can take the form of memory **3700** to store the current state but allow only a password-enabled user to make changes. One embodiment is a lighting unit **102** that is connected to a network or to a device that allows access to the lighting unit **102** or network. The device can be an authorized device whose initial communication establishes trust between two devices or between the device and network. This device can, once having established the connection, allow for the selection or modification of pattern, color, effect or relationship between other devices such as ambient sensors or external devices. The system can store modes, such as in memory **3700**. The system can detect a user event, such as an attempt by the user to change modes, such as sending an instruction over a network or wireless device. The system queries whether the user is authorized to change the mode of the lighting unit **102**, such as by asking for a password, searching for a stored password, or checking a device identifier for the device through which the user is seeking to change the mode of the lighting unit **102**. If the user is not authorized, then the system maintains the previous mode and optionally notifies the lighting designer, installer, or other individual of the unauthorized attempt to change the mode. If the user is authorized, then the user is allowed to change the mode. Facilities for allowing only authorized users to trigger events are widely known in the arts of computer programming, and any such facilities can be used with a processor **3600** and memory **3700** used with a lighting unit **102**.

In other embodiments, the lighting designer can specify changes in color over time or based on time of day or season of year. It is beneficial for a lighting unit **102** to measure the amount of time that it has been on and store information in a compact form as to its lighting history. This provides a useful history of the use of the light and can be correlated to use lifetime and power draw, among other measurements. An intelligent networked lighting unit **102** can store a wide variety of useful information about its own state over time and the environmental state of its surroundings. A lighting unit can store a histogram, a chart representing value and time of lighting over time. The histogram can be stored in memory **3700**. A histogram can chart on time versus off time for a lighting unit **102**. A histogram can be correlated to other data, such as room habitation, to develop models of patterns of use, which can then be tied into a central control facility **3500**, such as integrated with a building control system.

In embodiments a user interface **4908** instructs a lighting system **100** to produce a desired mixed light output. The user interface can be a remote control, a network interface, a dipswitch, a computer, such as a laptop computer, a personal computer, a network computer, or a personal digital assistant, an interface for programming an on-board memory of the illumination system, a wireless interface, a digital facility, a remote control, a receiver, a transceiver, a network interface, a personal computer, a handheld computer, a push button, a dial, a toggle/membrane switch, an actuator that actuates when one part of a housing is rotated relative to another, a motion sensor, an insulating strip that is removed to allow power to a unit, an electrical charge to turn a unit on, or a magnetic interface such as a small reed-relay or Hall-effect sensor that can be incorporated so when a magnetic material is brought within the proximity of the device it completes a power circuit.

Referring to FIG. **35***a*, a user interface **4908** may include a browser **3550** running on a computer. The browser **3550** may be used to trigger shows, such as ones stored locally at a power data supply **1758** connected to a network, such as through an Ethernet switch. In general a computer may supply a graphical user interface for authoring and triggering shows, as described in more detail below. FIG. **35***b* shows a graphical user interface **3502** for a playback controller that can control the playback of shows, such as ones stored in memory **3700** of a lighting system **100**.

In embodiments a keypad **3650** may be used to store control signals for lighting shows. Buttons **3652** on the keypad **3650** may be used to trigger stored shows, such as to be delivered directly to lighting units **102** or to deliver them across a network, such as in the Ethernet configuration of FIG. **36**.

In embodiments it may be important to provide an addressing facility **6600** for providing an address to a lighting unit **102** or light system **100**. An address permits a particular lighting unit **102** to be identified among a group of lighting units **102** or a group of lighting units **102** to be identified among a larger group, or a group of other devices deployed on a common network. An address in turn permits use of the mapping facility **5002** for mapping locations of lighting units **102** according to their unique identifiers or addresses. Once locations are mapped, it is possible to deliver control signals to the lighting units **102** in desired sequences to create complex effects, such as color-chasing rainbows, or the like, based on their correct locations in the world.

The term "addressable" is used herein to include a device (e.g., a light source in general, a lighting unit or fixture, a controller or processor associated with one or more light

sources or lighting units, other non-lighting related devices, etc.) that is configured to receive information (e.g., data) intended for multiple devices, including itself, and to selectively respond to particular information intended for it. The term "addressable" often is used in connection with a networked environment (or a "network," discussed further below), in which multiple devices are coupled together via some communications medium or media.

In one implementation, one or more devices coupled to a network may serve as a controller for one or more other devices coupled to the network (e.g., in a master/slave relationship). In another implementation, a networked environment may include one or more dedicated controllers that are configured to control one or more of the devices coupled to the network. Generally, multiple devices coupled to the network each may have access to data that is present on the communications medium or media; however, a given device may be "addressable" in that it is configured to selectively exchange data with (i.e., receive data from and/or transmit data to) the network, based, for example, on one or more particular identifiers (e.g., "addresses") assigned to it.

More specifically, one embodiment of the present invention is directed to a system of multiple controllable lighting units coupled together in any of a variety of configurations to form a networked lighting system. In one aspect of this embodiment, each lighting unit has one or more unique identifiers (e.g., a serial number, a network address, etc.) that may be pre-programmed at the time of manufacture and/or installation of the lighting unit, wherein the identifiers facilitate the communication of information between respective lighting units and one or more lighting system controllers. In another aspect of this embodiment, each lighting unit **102** may be flexibly deployed in a variety of physical configurations with respect to other lighting units of the system, depending on the needs of a given installation.

One issue that may arise in such a system of multiple controllable lighting units **102** is that upon deployment of the lighting units **102** for a given installation, it is in some cases challenging to configure one or more system controllers a priori with some type of mapping information that provides a relationship between the identifier for each lighting unit **102** and its physical location relative to other lighting units **102** in the system. In particular, a lighting system designer/installer may desire to purchase a number of individual lighting units each pre-programmed with a unique identifier (e.g., serial number), and then flexibly deploy and interconnect the lighting units in any of a variety of configurations to implement a networked lighting system. At some point before operation, however, the system needs to know the identifiers of the controllable lighting units deployed, and preferably their physical location relative to other units in the system, so that each unit may be appropriately controlled to realize system-wide lighting effects.

Referring to FIG. **37**, one way to accomplish mapping is to have one or more system operators and/or programmers manually create one or more custom system configuration files **3700** containing the individual identifiers **3702** for each lighting unit **102** and corresponding mapping information that provides some means of identifying the relative physical locations **3708** of lighting units **102** in the system. Configuration files **3700** can include other attributes, such as the positions lit by a lighting unit **102**, as well as the positions of the lighting units **102** themselves. As the number of lighting units **192** deployed in a given system increases and the physical geometry of the system becomes more complex, however, and the process of creating manual configuration files can quickly become unwieldy. Rather than manually entering configuration data, it is desirable to have other methods of detecting addresses and mapping addresses of lighting units **102** to physical locations.

In view of the foregoing, one embodiment of the invention is directed to methods and systems that facilitate a determination of the respective identifiers of controllable lighting units coupled together to form a networked lighting system. In one aspect of this embodiment, each lighting unit of the system has a pre-programmed multiple-bit binary identifier, and a determination algorithm is implemented to iteratively determine (i.e., "learn") the identifiers of all lighting units that make up the system. In various aspects, such determination/learning algorithms may employ a variety of detection schemes during the identifier determination process, including, but not limited to, monitoring a power drawn by lighting units at particular points of the process, and/or monitoring an illumination state of one or more lighting units at particular points of the determination process.

Once the collection of identifiers for all lighting units of the system is determined (or manually entered), another embodiment of the present invention is directed to facilitating the compilation of mapping information that relates the identified lighting units **102** to their relative physical locations in the installation. In various aspects of this embodiment, the mapping information compilation process may be facilitated by one or more graphical user interfaces that enable a system operator and/or programmer to conveniently configure the system based on either learned and/or manually entered identifiers of the lighting units, as well as one or more graphic representations of the physical layout of the lighting units relative to one another.

In an embodiment, identifiers for lighting units **102** can be determined by a serires of steps. First, a set of lighting units **102** having unique identifiers stored in memory **3700** are provided. Next, address identification information is provided to the lighting units. Next, the lighting unit **102** is caused to read the address identification information, compare the address identification information to at least a portion of the identifier, and cause the lighting unit **102** to respond to the address identification information by either energizing or de-energizing one or more light sources of the lighting unit **102**. Finally, the system monitors the power consumed by the lighting unit to provide an indication of the comparison between the identifier and the address identification information.

In embodiments each lighting unit controller includes a power sensing module that provides one or more indications to the LUC when power is being drawn by one or more lighting units coupled to the LUC (i.e., when one or more light sources of one or more of the lighting units is energized). The power sensing module also may provide one or more output signals to the processor **3600**, and the processor **3600** in turn may communicate to the central control facility **3500** information relating to power sensing.

The power sensing module, together with the processor **3600**, may be adapted to determine merely when any power is being consumed by any of the lighting units coupled to the LUC, without necessarily determining the actual power being drawn or the actual number of units drawing power. As discussed further below, such a "binary" determination of power either being consumed or not consumed by the collection of lighting units **102** coupled to the LUC facilitates an identifier determination/learning algorithm (e.g., that may be performed by the LUC processor **3600** or the central control facility **3500**) according to one embodiment of the invention. In other aspects, the power sensing module

and the processor **3600** may be adapted to determine, at least approximately, and actual power drawn by the lighting units at any given time. If the average power consumed by a single lighting unit is known a priori, the number of units consuming power at any given time can then be derived from such an actual power measurement. Such a determination is useful in other embodiments of the invention, as discussed further below.

As discussed above, according to one embodiment of the invention, the LUC processor **3600** may monitor the output signal from the power sensing module to determine if any power is being drawn by the group of lighting units, and use this indication in an identifier determination/learning algorithm to determine the collection of identifiers of the group of lighting units coupled to the LUC. For purposes of illustrating the various concepts related to such an algorithm, the following discussion assumes an example of a unique four bit binary identifier for each of the lighting units coupled to a given LUC. It should be appreciated, however, that lighting unit identifiers according to the present invention are not limited to four bits, and that the following example is provided primarily for purposes of illustration.

FIG. **38** illustrates a binary search tree **3800** based on four bit identifiers for lighting units, according to one embodiment of the invention. In FIG. **38**, it is assumed that three lighting unit **102** are coupled to a generic LUC, and that the first lighting unit has a first binary identifier **3802**A of one, one, zero, one (1101), the second lighting unit has a second binary identifier **3802**B of one, one, zero, zero (1100), and the third lighting unit has a third binary identifier **3802**C of one, zero, one, one (1011). Referring to FIG. **39**, exemplary identifiers are used below to illustrate an example of an identifier determination/learning algorithm depicted in FIG. **39**.

In embodiments, the collection of identifiers corresponding to the respective units and the number of units are determined. However, it should be appreciated that no particular determination is made of which lighting unit has which identifier. Stated differently, the algorithm does not determine a one-to-one correspondence between identifiers and lighting units, but rather merely determines the collection of identifiers of all of the lighting units coupled to the LUC. According to one embodiment of the invention, such a determination is sufficient for purposes of subsequently compiling mapping information regarding the physical locations of the lighting units relative to one another.

One or both of a given LUC processor **3600** or the central control facility **3500** may be configured to execute the algorithm, and that either the processor **3600** or the central control facility **3500** may include memory **3700** to store a flag for each bit of the identifier, which flag may be set and reset at various points during the execution of the algorithm, as discussed further below. Furthermore, for purposes of explaining the algorithm, it is to be understood that the "first bit" of an identifier refers to the highest order binary bit of the identifier. In particular, with reference to the example of FIG. **38**, the four identifier bits are consecutively indicated as a first bit **3804**, a second bit **3808**, a third bit **3810**, and a fourth bit **3812**.

Referring again to the exemplary identifiers and binary tree illustrated in FIG. **38**, the mapping algorithm implements a complete search of the binary tree to determine the identifiers of all lighting units coupled to a given LUC. The algorithm begins by selecting a first state (either a 1 or a 0) for the highest order bit **3804** of the identifier, and then sends a global command to all of the lighting units coupled to the LUC to energize one or more of their light sources if their respective identifiers have a highest order bit corresponding to the selected state. Again for purposes of illustration, it is assumed here that the algorithm initially selects the state "I" (indicated with the reference character **3814** in FIG. **38**). In response to this command, all of the lighting units energize their light sources and, hence, power is drawn from the LUC. It should be appreciated, however, that the algorithm may initially select the state "0" (indicated with the reference character **3818** in FIG. **38**); in the present case, since no lighting unit has an identifier with a "0" in the highest order bit **3804**, no power would be drawn from the LUC and the algorithm would respond by setting a flag for this bit, changing the state of this bit, and by default assume that all of the lighting units coupled to the LUC necessarily have a "1" in the highest order bit (as is indeed the case for this example).

As a result of a "1" in the highest order bit having been identified, the algorithm adds another bit **3808** with the same state (i.e., "1"), and then sends a global command to all of the lighting units to energize their light sources if their respective identifiers begin with "11" (i.e., 11XX). As a result of this query, the first and second lighting units energize their light sources and draw power, but the third lighting unit does not energize. In any event, some power is drawn, so the algorithm then queries if there are any more bits in the identifier. In the present example there are more bits, so the algorithm returns to adding another bit **3810** with the same state as the previous bit and then sends a global command to all lighting units to energize their light sources if their respective identifiers begin with "111" (i.e., 111X).

At this point in the example, no identifiers correspond to this query, and hence no power is drawn from the LUC. Accordingly, the algorithm sets a flag for this third bit **3810**, changes the state of the bit (now to a "0"), and again queries if there are any more bits in the identifier. In the present example there are more bits, so the algorithm returns to adding another bit **3812** with the same state as the previous bit (i.e., another "0") and then sends a global command to all lighting units to energize their light sources if they have the identifier "1100."

In response to this query, the second lighting unit energizes its light sources and hence power is drawn from the LUC. Since there are no more bits in the identifiers, the algorithm has thus learned a first of the three identifiers, namely, the second identifier **3802**B of "1100." At this point, the algorithm checks to see if a flag for the fourth bit **3812** has been set. Since no flag yet has been set for this bit, the algorithm changes the bit state (now to a "1"), and sends a global command to all lighting units to energize their light sources if they have the identifier "1101." In the present example, the first lighting unit energizes its light sources and draws power, indicating that yet another identifier has been learned by the algorithm, namely, the first identifier **3802**A of "1101."

At this point, the algorithm goes back one bit in the identifier (in the present example, this is the third bit **3810**) and checks to see if a flag was set for this bit. As pointed out above, indeed the flag for the third bit was set (i.e., no identifiers corresponded to "111X"). The algorithm then checks to see if it has arrived back at the first (highest order) bit **3804** again, and if not, goes back yet another bit (to the second bit **3808**). Since no flag has yet been set for this bit (it is currently a "1"), the algorithm changes the state of the second bit (i.e., to a "0" in the present example), and sends a global command to all lighting units to energize their light sources if their respective identifiers begin with "10" (i.e., 10XX). In the current example, the third lighting unit

energizes its light sources, and hence power is drawn. Accordingly, the algorithm then sets the flag for this second bit, clears any lower order flags that may have been previously set (e.g., for the third or fourth bits **3810** and **3812**), and returns to adding another bit **3810** with the same state as the previous bit. From this point, the algorithm executes as described above until ultimately it learns the identifier **1402**C of the third lighting unit (i.e., 1011), and determines that no other lighting units are coupled to the LUC.

Again, it should be appreciated that although an example of four bit identifiers was used for purposes of illustration, the algorithm may be applied similarly to determine identifiers having an arbitrary number of bits. Furthermore, it should be appreciated that this is merely one example of an identifier determination/learning algorithm, and that other methods for determining/learning identifiers may be implemented according to other embodiments of the invention.

Referring to FIG. **40**, in another embodiment, the lighting unit controller may not include a power monitoring system but the methodology of identifying lighting unit addresses according to the principles of the present invention may still be achieved. For example, rather than monitoring the power consumed by one or more lighting units, a visible interpretation of the individual lighting units may be recorded, either by human intervention or another image capture system such as a camera or video recorder. In this case, the images of the light emitted by the individual lighting units may be recorded for each bit identification and it may not be necessary to go up and down the binary task tree as identified above.

The method may involve the controlling of light from a plurality of lighting units that are capable of being supplied with addresses (identifiers). The method may comprise the steps of equipping each of the lighting units with a processing facility for reading data and providing instructions to the lighting units to control at least one of the color and the intensity of the lighting units, each processing facility capable of being supplied with an address. For example, the lighting units may include a lighting unit **102** where the processor **3600** is capable of receiving network data. The processor may receive network data and operate the LED(s) **300** in a manner consistent with the received data. The processor may read data that is explicitly or implicitly addressed to it or it may respond to all of the data supplied to it. The network commands may be specifically targeting a particular lighting unit with an address or group of lighting units with similar addresses or the network data may be communicated to all network devices. A communication to all network devices may not be addressed but may be a universe or world style command.

The method may further comprise the step of supplying each processor with an identifier, the identifier being formed of a plurality of bits of data. For example, each lighting unit **102** may be associated with memory **3700** (e.g. EPROM) and the memory **3700** may contain a serial number that is unique to the light or processor. Of course, the setting of the serial number or other identifier may be set through mechanical switches or other devices and the present invention is not limited by a particular method of setting the identifier. The serial number may be a 32-bit number in EPROM for example.

The method may also comprise sending to a plurality of such processors an instruction, the instruction being associated with a selected and numbered bit of the plurality of bits of the identifier, the instruction causing the processor to select between an "on" state of illumination and an "off" state of illumination for light sources controlled by that processor, the selection being determined by the comparison between the instruction and the bit of the identifier corresponding to the number of the numbered bit of the instruction. For example, a network command may be sent to one or more lighting units in the network of lighting units. The command may be a global command such that all lighting units that receive the command respond. The network command may instruct the processors **102** to read the first bit of data associated with its serial number. The processor **3600** may then compare the first bit to the instructions in the network instruction or assess if the bit is a one or a zero. If the bit is a one, the processor may turn the lighting unit on or to a particular color or intensity. This provides a visual representation of the first bit of the serial number. A person or apparatus viewing the light would understand that the first bit in the serial number is either a one (e.g. light is on) or a zero (e.g. light is off). The next instruction sent to the light may be to read and indicate the setting of the second bit of the address. This process can be followed for each bit of the address allowing a person or apparatus to decipher the address by watching the light sources of the lighting unit turn on and/or off following each command.

After reducing ambient light at a step **4002**, a camera may capture at a step **4006** a representation of which lights are turned on at a step **4004**. The method may further comprise capturing a representation of which lighting units are illuminated and which lighting units are not illuminated for that instruction. For example, a camera, video or other image capture system may be used to capture the image of the lighting unit(s) following each such network command. Repeating the preceding two steps for all numbered bits of the identifier allows for the reconstruction of the serial number of each lighting unit in the network at an analysis step **4008**. At a step **4012** the analysis is used to generate a table of mapping data for lighting units **102**.

The method may further comprise assembling the identifier for each of the lighting units, based on the "on" or "off" state of each bit of the identifier as captured in the representation. For example, a person could view the lighting unit's states and record them to decipher the lighting unit's serial number or software can be written to allow the automatic reading of the images and the reassembly of the serial numbers from the images. The software may be used to compare the state of the lighting unit with the instruction to calculate the bit state of the address and then proceed to the next image to calculate the next bit state. The software may be adapted to calculate a plurality or all of the bit states of the associated lighting units in the image and then proceed to the next image to calculate the next bit state. This process could be used to calculate all of the serial numbers of the lighting units in the image.

The method may also comprise assembling a correspondence between the known identifiers (e.g. serial numbers) and the physical locations of the lighting units having the identifiers. For example, the captured image not only contains lighting unit state information but it also contains lighting unit position information. The positioning may be relative or absolute. For example, the lighting units may be mounted on the outside of a building and the image may show a particular lighting unit is below the third window from the right on the seventy second floor. This lighting unit's position may also be referenced to other lighting unit positions such that a map can be constructed which identifies all of the identifiers (e.g. serial numbers) with a lighting unit and its position. Once these positions and/or lighting units are identified, network commands can be directed to the particular lighting units by addressing the commands with

the identifier and having the lighting unit respond to data that is addressed to its identifier. The method may further comprise controlling the illumination from the lighting units by sending instructions to the desired lighting units at desired physical locations. Another embodiment may involve sending the now identified lighting units address information such that the lighting units store the address information as its address and will respond to data sent to the address. This method may be useful when it is desired to address the lighting units in some sequential scheme in relation to the physical layout of the lighting units. For example, the user may want to have the addresses sequentially increase as the lighting fixtures go from left to right across the face of a building. This may make authoring of lighting sequences easier because the addresses are associated with position or progression.

Another aspect of the present invention relates to communicating with lighting units and altering their address information. In an embodiment, a lighting unit controller LUC may be associated with several lighting units and the controller may know the address information/identifiers for the lighting units associated with the controller. A user may want to know the relative position of one lighting unit as compared to another and may communicate with the controller to energize a lighting unit such that the user can identify its position within an installation. For example, the user may use a computer with a display to show representations of the controller and the lighting units associated with the controller. The user may select the controller, using the representation on the display, and cause all of the associated lighting units to energize allowing the user to identify their relative or absolute positions. A user may also elect to select a lighting unit address or representation associated with the controller to identify its particular position with the array of other lighting units. The user may repeat this process for all the associated lighting unit addresses to find their relative positions. Then, the user may rearrange the lighting unit representations on the display in an order that is more convenient (e.g. in order of the lighting units actual relative positions such as left to right). Information relating to the rearrangement may then be used to facilitate future communications with the lighting units. For example, the information may be communicated to the controller and the lighting units to generate new 'working' addresses for the lighting units that correspond with the re-arrangement. In another embodiment, the information may be stored in a configuration file to facilitate the proper communication to the lighting units.

In embodiments a method of determining/compiling mapping information relating to the physical locations of lighting units is provided that includes steps of providing a display system; providing a representation of a first and second lighting unit wherein the representations are associated with a first address; providing a user interface wherein a user can select a lighting unit and cause the selected lighting units to energize; selecting a lighting unit to identify its position and repeating this step for the other lighting unit; re-arranging the representations of the first lighting unit and the second lighting unit on the display using a user interface; and communicating information to the lighting units relating to the rearrangement to set new system addresses. The method may include other steps such as storing information relating to the re-arrangement of the representations on a storage medium. The storage medium may be any electronic storage medium such as a hard drive; CD; DVD; portable memory system or other memory device. The method may also include the step of storing the address information in a lighting unit as the lighting unit working address.

In various embodiments, once the lighting units have been identified, the lighting unit controller may transmit the address information to a computer system. The computer system may include a display (e.g., a graphics user interface) where a representation of the lighting unit controller is displayed as an object. The display may also provide representations of the lighting unit **102** as an object. In an embodiment, the computer, possibly through a user interface, may be used to re-arrange the order of the lighting unit representations. For example, a user may click on the lighting unit representation and all of the lighting units associated with the lighting unit controller may energize to provide the user with a physical interpretation of the placement of the lighting unit (e.g. they are located on above the window on the 72nd floor of the building). Then, the user may click on individual lighting unit representations to identify the physical location of the lighting unit within the array of lighting units. As the user identifies the lighting unit locations, the user may rearrange the lighting unit representations on the computer screen such that they represent the ordering in the physical layout. In an embodiment, this information may be stored to a storage medium. The information may also be used in a configuration file such that future communications with the lighting units are directed per the configuration file. In an embodiment, information relating to the rearrangement may be transmitted to the lighting unit controller and new 'working' addresses may be assigned to the individual lighting units. This may be useful in providing a known configuration of lighting unit addresses to make the authoring of lighting shows and effects easier.

Another aspect of the present invention relates to systems and methods of communicating to large-scale networks of lighting units. In an embodiment, the communication to the lighting units originates from a central controller where information is communicated in high level commands to lighting unit controllers. The high level commands are then interpreted by the lighting unit controllers, and the lighting unit controllers generate lighting unit commands. In an embodiment, the lighting unit controller may include its own address such that commands can be directed to the associated lighting units through controller-addressed information. For example, the central controller may communicate light controller addressed information that contains instructions for a particular lighting effect. The lighting unit controller may monitor a network for its own address and once heard, read the associated information. The information may direct the lighting unit controller to generate a dynamic lighting effect (e.g. a moving rainbow of colors) and then communicate control signals to its associated lighting units to effectuate the lighting effect. In an embodiment, the lighting unit controller may also include group address information. For example, it may include a universe address that associates the controller with other controllers or systems to create a universe of controllers that can be addressed as a group; or it may include a broadcast address such that broadcast commands can be sent to all controllers on the network.

Referring to FIG. **41**, a flow diagram **3900** includes steps for a mapping facility **5002**. A mapping facility **5002** can first discover what interfaces are located on an associated network, such as Ethernet switches or power-data systems. The mapping facility can then discover what lights are present. The mapping facility then creates a map layout, using the addresses and locations identified for lights as described above. The mapping can be a two-dimensional

representation of the lighting units **102** associated with the mapping facility **5002**. The mapping facility **5002** allows the user to group lights within the mapping, until a mapping is complete.

The light system manager **5000** may operate in part on the authoring computer **5010**, which may include a mapping facility **5002**. The mapping facility **5002** may include a graphical user interface **4212**, or management tool, which may assist a user in mapping lighting units to locations. The management tool may include various panes, graphs or tables, each displayed in a window of the management tool. A lights/interfaces pane lists lighting units or lighting unit interfaces that are capable of being managed by the management tool. Interfaces may include power/data supplies (PDS) **1758** for one or more lighting systems, DMX interfaces, DALI interfaces, interfaces for individual lighting units, interfaces for a tile lighting unit, or other suitable interfaces. The interface also includes a groups pane, which lists groups of lighting units that are associated with the management tool, including groups that can be associated with the interfaces selected in the lights/interfaces pane. As described in more detail below, the user can group lighting units into a wide variety of different types of groups, and each group formed by the user can be stored and listed in the groups pane. The interface also includes the layout pane, which includes a layout of individual lighting units for a light system or interface that is selected in the lights/interfaces pane. The layout pane shows a representative geometry of the lighting units associated with the selected interface, such as a rectangular array if the interface is an interface for a rectangular tile light. The layout can be any other configuration, as described in connection with the other figures above. Using the interface **4212**, a user can discover lighting systems or interfaces for lighting systems, map the layout of lighting units associated with the lighting system, and create groups of lighting units within the mapping, to facilitate authoring of shows or effects across groups of lights, rather than just individual lights. The grouping of lighting units dramatically simplifies the authoring of complex shows for certain configurations of lighting units.

Referring to FIG. **42**, the graphical user interface **4212** of the mapping facility **5002** of the authoring computer **5010** can display a map, or it may represent a two- or three-dimensional space in another way, such as with a coordinate system, such as Cartesian, polar or spherical coordinates. In embodiments, lights in an array, such as a rectangular array, can be represented as elements in a matrix, such as with the lower left corner being represented as the origin (0, 0) and each other light being represented as a coordinate pair (x, y), with x being the number of positions away from the origin in the horizontal direction and y being the number of positions away from the origin in the vertical direction. Thus, the coordinate (3, 4) can indicate a light system three positions away from the origin in the horizontal direction and four positions away from the origin in the vertical direction. Using such a coordinate mapping, it is possible to map addresses of real world lighting systems into a virtual environment, where control signals can be generated and associated geometrically with the lighting systems. With conventional addressable lighting systems, a Cartesian coordinate system may allow for mapping of light system locations to authoring systems for light shows. In other embodiments, three-dimensional representations can be provided to simulate three-dimensional locations of lights in the real world, and object-oriented techniques allow manipulation of the representations in the graphical user interface **4212** to be converted to lighting control signals that reflect what is occurring in the graphical user interface **4212**.

It may be convenient to map lighting systems in various ways. For example, a rectangular array can be formed by suitably arranging a curvilinear string of lighting units. The string of lighting units may use a serial addressing protocol, such as described in the applications incorporated by reference herein, wherein each lighting unit in the string reads, for example, the last unaltered byte of data in a data stream and alters that byte so that the next lighting unit will read the next byte of data. If the number of lighting units N in a rectangular array of lighting units is known, along with the number of rows in which the lighting units are disposed, then, using a table or similar facility, a conversion can be made from a serial arrangement of lighting units **1** to N to another coordinate system, such as a Cartesian coordinate system. Thus, control signals can be mapped from one system to the other system. Similarly, effects and shows generated for particular configurations can be mapped to new configurations, such as any configurations that can be created by arranging a string of lighting units, whether the share is rectangular, square, circular, triangular, or has some other geometry. In embodiments, once a coordinate transformation is known for setting out a particular geometry of lights, such as building a two-dimensional geometry with a curvilinear string of lighting units, the transformation can be stored as a table or similar facility in connection with the light management system **5002**, so that shows authored using one authoring facility can be converted into shows suitable for that particular geometric arrangement of lighting units using the light management system **5002**. The light system composer **5004** can store pre-arranged effects that are suitable for known geometries, such as a color chasing rainbow moving across a tile light with sixteen lighting units in a four-by-four array, a burst effect moving outward from the center of an eight-by-eight array of lighting units, or many others.

Various other geometrical configurations of lighting units are so widely used as to benefit from the storing of pre-authored coordinate transformations, shows and effects. For example, a rectangular configuration is widely employed in architectural lighting environments, such as to light the perimeter of a rectangular item, such as a space, a room, a hallway, a stage, a table, an elevator, an aisle, a ceiling, a wall, an exterior wall, a sign, a billboard, a machine, a vending machine, a gaming machine, a display, a video screen, a swimming pool, a spa, a walkway, a sidewalk, a track, a roadway, a door, a tile, an item of furniture, a box, a housing, a fence, a railing, a deck, or any other rectangular item. Similarly, a triangular configuration can be created, using a curvilinear string of lighting units, or by placing individual addressable lighting units in the configuration. Again, once the locations of lighting units and the dimensions of the triangle are known, a transformation can be made from one coordinate system to another, and pre-arranged effects and shows can be stored for triangular configurations of any selected number of lighting units. Triangular configurations can be used in many environments, such as for lighting triangular faces or items, such as architectural features, alcoves, tiles, ceilings, floors, doors, appliances, boxes, works of art, or any other triangular items.

Lighting units **102** can be placed in the form of a character, number, symbol, logo, design mark, trademark, icon, or other configuration designed to convey information or meaning. The lighting units can be strung in a curvilinear string to achieve any configuration in any dimension. Again,

once the locations of the lighting units are known, a conversion can be made between Cartesian (x, y) coordinates and the positions of the lighting units in the string, so that an effect generated using a one coordinate system can be transformed into an effect for the other. Characters such as those mentioned above can be used in signs, on vending machines, on gaming machines, on billboards, on transportation platforms, on buses, on airplanes, on ships, on boats, on automobiles, in theatres, in restaurants, or in any other environment where a user wishes to convey information.

Lighting units can be configured in any arbitrary geometry, not limited to two-dimensional configurations. For example, a string of lighting units can cover two sides of a building. The three-dimensional coordinates (x, y, z) can be converted based on the positions of the individual lighting units in the string. Once a conversion is known between the (x, y, z) coordinates and the string positions of the lighting units, shows authored in Cartesian coordinates, such as for individually addressable lighting units, can be converted to shows for a string of lighting units, or vice versa. Pre-stored shows and effects can be authored for any geometry, whether it is a string or a two- or three-dimensional shape. These include rectangles, squares, triangles, geometric solids, spheres, pyramids, tetrahedrons, polyhedrons, cylinders, boxes and many others, including shapes found in nature, such as those of trees, bushes, hills, or other features.

Referring to FIG. **41**, a flow diagram **3900** shows various steps that are optionally accomplished using the mapping facility **5002**, such as the interface **4212**, to map lighting units and interfaces for an environment into maps and layouts on the authoring computer **5010**. At a step **3902**, the mapping facility **1652** can discover interfaces for lighting systems, such as power/data supplies **1758**, tile light interfaces, DMX or DALI interfaces, or other lighting system interfaces, such as those connected by an Ethernet switch. At a step **3904** a user determines whether to add more interfaces, returning to the step **3902** until all interfaces are discovered. At a step **3908** the user can discover a lighting unit, such as one connected by Ethernet, or one connected to an interface discovered at the step **3902**. The lights can be added to the map of lighting units associated with each mapped interface, such as in the lights/interfaces pane of the interface **4212**. At a step **3910** the user can determine whether to add more lights, returning to the step **3908** until all lights are discovered. When all interfaces and lights are discovered, the user can map the interfaces and lights, such as using the layout pane of the interface **4212**. Standard maps can appear for tiles, strings, arrays, or similar configurations. Once all lights are mapped to locations in the layout pane, a user can create groups of lights at a step **3918**, returning from the decision point **3920** to the step **3918** until the user has created all desired groups. The groups appear in the groups pane as they are created. The order of the steps in the flow diagram **3900** can be changed; that is, interfaces and lights can be discovered, maps created, or groups formed, in various orders. Once all interfaces and lights are discovered, maps created and groups formed, the mapping is complete at a step **3922**. Many embodiments of a graphical user interface for mapping lights in a software program may be envisioned by one of skill in the art in accordance with this invention.

Using a mapping facility, light systems can optionally be mapped into separate zones, such as DMX zones. The zones can be separate DMX zones, including zones located in different rooms of a building. The zones can be located in the same location within an environment. In embodiments the environment can be a stage lighting environment.

Thus, in various embodiments, the mapping facility allows a user to provide a grouping facility for grouping light systems, wherein grouped light systems respond as a group to control signals. In embodiments the grouping facility comprises a directed graph. In embodiments, the grouping facility comprises a drag and drop user interface. In embodiments, the grouping facility comprises a dragging line interface. The grouping facility can permit grouping of any selected geometry, such as a two-dimensional representation of a three-dimensional space. In embodiments, the grouping facility can permit grouping as a two-dimensional representation that is mapped to light systems in a three-dimensional space. In embodiments, the grouping facility groups lights into groups of a predetermined conventional configuration, such as a rectangular, two-dimensional array, a square, a curvilinear configuration, a line, an oval, an oval-shaped array, a circle, a circular array, a square, a triangle, a triangular array, a serial configuration, a helix, or a double helix.

Referring to FIG. **42**, a light system composer **5004** can be provided, running on the authoring computer **5010**, for authoring lighting shows comprised of various lighting effects. The lighting shows can be downloaded to the light system engine **5008**, to be executed on lighting units **102**. The light system composer **5004** is preferably provided with a graphical user interface **4212**, with which a lighting show developer interacts to develop a lighting show for a plurality of lighting units **102** that are mapped to locations through the mapping facility **5002**. The user interface **4212** supports the convenient generation of lighting effects, embodying the object-oriented programming approaches described above.

Referring to FIG. **43**, the user interface **4212** allows a user to develop shows and effects for associated lighting units **102**. The user can select an existing effect by initiating a tab **4052** to highlight that effect. In embodiments, certain standard attributes are associated with all or most effects. Each of those attributes can be represented by a field in the user interface **4050**. For example, a name field **4054** can hold the name of the effect, which can be selected by the user. A type field **4058** allows the user to enter a type of effect, which may be a custom type of effect programmed by the user, or may be selected from a set of preprogrammed effect types, such as by clicking on a pull-down menu to choose among effects. For example, in FIG. **43**, the type field **4058** for the second listed effect indicates that the selected effect is a color-chasing rainbow. A group field **4060** indicates the group to which a given effect is assigned, such as a group created through the light system manager interface **2550** described above. For example, the group might be the first row of a tile light, or it might be a string of lights disposed in an environment. A priority field **4062** indicate the priority of the effect, so that different effects can be ranked in their priority. For example, an effect can be given a lower priority, so that if there are conflicting effects for a given group during a given show, the a higher priority effect takes precedence. A start field **4064** allows the user to indicate the starting time for an effect, such as in relation to the starting point of a lighting show. An end field **4068** allows the user to indicate the ending time for the effect, either in relation to the timing of the lighting show or in relation to the timing of the start of the effect. A fade in field **4070** allows the user to create a period during which an effect fades in, rather than changes abruptly. A fade out field **4072** allows the user to fade the effect out, rather than ending it abruptly. For a given selected type of effect, the parameters of the effect can be set in an effects pane **4074**. The effects pane **4074** automatically changes, prompting the user to enter data that sets the

appropriate parameters for the particular type of effect. A timing pane **4078** allows the user to set timing of an effect, such as relative to the start of a show or relative to the start or end of another effect. Parameters can exist for all or most effects. These include the name **4152**, the type **4154**, the group **4158**, the priority **4160**, the start time **4162**, the end time **4164**, the fade in parameter **4168** and the fade out parameter **4170**.

Referring to FIG. **44**, a set of effects can be linked temporally, rather than being set at fixed times relative to the beginning of a show. For example, a second effect can be linked to the ending of a first effect at a point **4452**. Similarly, a third effect might be set to begin at a time that is offset by a fixed amount relative to the beginning of the second effect. With linked timing of effects, a particular effect can be changed, without requiring extensive editing of all of the related effects in a lighting show. Once a series of effects is created, each of them can be linked, and the group can be saved together as a meta effect, which can be executed across one or more groups of lights. Once a user has created meta effects, the user can link them, such as by linking a first meta effect and a second meta effect in time relative to each other. Linking effects and meta effects, a user can script entire shows, or portions of shows. The creation of reusable meta effects can greatly simplify the coding of shows across groups.

In embodiments a user can select an animation effect, in which a user can generate an effect using software used to generate a dynamic image, such as Flash **5** computer software offered by Macromedia, Incorporated. Flash **5** is a widely used computer program to generate graphics, images and animations. Other useful products used to generate images include, for example, Adobe Illustrator, Adobe Photoshop, and Adobe LiveMotion.

Referring to FIG. **45**, a flow diagram **4500** shows steps for converting computer animation data to lighting control signals. In a light management facility **5000**, a map file **4504** is created. A graphics facility **4508** is used to create an animation, which is a sequence **4510** of graphics files. A conversion module **4512** converts the map file and the animation facility, based on linking pixels in the animation facility to lights in the mapping facility. The playback tool **4514** delivers data to light systems **4518**, so that the light systems **100** play lighting shows that correspond to the animation effects generated by the animation facility.

Various effects can be created, such as a fractal effect, a random color effect, a sparkle effect, streak effect, sweep effect, white fade effect, XY burst effect, XY spiral effect, and text effect.

As seen in connection with the various embodiments of the user interface **4212** and related figures, methods and systems are included herein for providing a light system composer **5004** for allowing a user to author a lighting show using a graphical user interface **4212**. The light system composer **5004** includes an effect authoring system for allowing a user to generate a graphical representation of a lighting effect. In embodiments the user can set parameters for a plurality of predefined types of lighting effects, create user-defined effects, link effects to other effects, set timing parameters for effects, generate meta effects, and generate shows comprised of more than one meta effect, including shows that link meta effects.

In embodiments, a user may assign an effect to a group of light systems. Many effects can be generated, such as a color chasing rainbow, a cross fade effect, a custom rainbow, a fixed color effect, an animation effect, a fractal effect, a random color effect, a sparkle effect, a streak effect, an X burst effect, an XY spiral effect, and a sweep effect.

In embodiments an effect can be an animation effect. In embodiments the animation effect corresponds to an animation generated by an animation facility. In embodiments the effect is loaded from an animation file. The animation facility can be a flash facility, a multimedia facility, a graphics generator, or a three-dimensional animation facility.

In embodiments the lighting show composer facilitates the creation of meta effects that comprise a plurality of linked effects. In embodiments the lighting show composer generates an XML file containing a lighting show according to a document type definition for an XML parser for a light engine. In embodiments the lighting show composer includes stored effects that are designed to run on a predetermined configuration of lighting systems. In embodiments the user can apply a stored effect to a configuration of lighting systems. In embodiments the light system composer includes a graphical simulation of a lighting effect on a lighting configuration. In embodiments the simulation reflects a parameter set by a user for an effect. In embodiments the light show composer allows synchronization of effects between different groups of lighting systems that are grouped using the grouping facility. In embodiments the lighting show composer includes a wizard for adding a predetermined configuration of light systems to a group and for generating effects that are suitable for the predetermined configuration.

In embodiments the configuration is a rectangular array, a string, or another predetermined configuration.

Once a show is downloaded to the light system engine **5008**, the light system engine **5008** can execute one or more shows in response to a wide variety of user input. For example, a stored show can be triggered for a lighting unit **102** that is mapped to a particular PDS **1758** associated with a light system engine **5008**. There can be a user interface for triggering shows downloaded on the light system engine **5008**. For example, the user interface may be a keypad, with one or more buttons for triggering shows. Each button might trigger a different show, or a given sequence of buttons might trigger a particular show, so that a simple push-button interface can trigger many different shows, depending on the sequence. In embodiments, the light system engine **5008** might be associated with a stage lighting system, so that a lighting operator can trigger pre-scripted lighting shows during a concert or other performance by pushing the button at a predetermined point in the performance.

In embodiments, other user interfaces can trigger shows stored on a light system engine **5008**, such as a knob, a dial, a button, a touch screen, a serial keypad, a slide mechanism, a switch, a sliding switch, a switch/slide combination, a sensor, a decibel meter, an inclinometer, a thermometer, a anemometer, a barometer, or any other input capable of providing a signal to the light system engine **5008**. In embodiments the user interface is the serial keypad, wherein initiating a button on the keypad initiates a show in at least one zone of a lighting system governed by a light system engine connected to the keypad.

Referring to FIG. **46**, a flow diagram **4600** indicates steps for object-oriented authoring of lighting shows as associated with other computer programs, such as computer games, three-dimensional simulations, entertainment programs and the like. First, at a step **4602** it is possible to code an object in an application. At a step **4604** it is possible to create instances for the objects. At a step **4608** light a system can add light as an instance to the object in the program. At the

step **4610** the system can add a thread to the code of the object-oriented program. At a step **4612** the system can draw an input signal from the thread of the object-oriented program for delivering control signals to a light system **100**. By adding light as an instance, lighting control signals can go hand-in-hand with other objects, instances and events that take place in other object-oriented computer programs.

Referring to FIG. **47**, a light system composer **5004** can be used to generate an effect that has various parameters. The parameters include the name **4752**, type **4754**, group **4758**, priority **4760**, start time **4762**, end time **4764**, fade in **4768** and fade out **4770**, as well as other parameters for particular effects.

FIG. **2** also illustrates that the lighting unit **102** may be configured to receive one or more signals **122** from one or more other signal sources **8400**. In one implementation, the processor **3600** of the lighting unit may use the signal(s), either alone or in combination with other control signals (e.g., signals generated by executing a lighting program, one or more outputs from a user interface, etc.), so as to control one or more of the light sources **300** in a manner similar to that discussed above in connection with the user interface **4908**.

Examples of the signal(s) that may be received and processed by the processor **3600** include, but are not limited to, one or more audio signals, video signals, power signals, various types of data signals, signals representing information obtained from a network (e.g., the Internet), signals representing some detectable/sensed condition, signals from lighting units, signals consisting of modulated light, etc. In various implementations, the signal source(s) **8400** may be located remotely from the lighting unit **102**, or included as a component of the lighting unit. For example, in one embodiment, a signal from one lighting unit **102** could be sent over a network to another lighting unit **102**.

Some examples of a signal source **8400** that may be employed in, or used in connection with, the lighting unit **102** of FIG. **2** include any of a variety of sensors **8402** or transducers that generate one or more signals in response to some stimulus. Examples of such sensors include, but are not limited to, various types of environmental condition sensors, such as thermally sensitive (e.g., temperature, infrared) sensors, humidity sensors, motion sensors, photosensors/light sensors (e.g., sensors that are sensitive to one or more particular spectra of electromagnetic radiation), sound or vibration sensors or other pressure/force transducers (e.g., microphones, piezoelectric devices), and the like.

Additional examples of a signal source **8400** include various metering/detection devices that monitor electrical signals or characteristics (e.g., voltage, current, power, resistance, capacitance, inductance, etc.) or chemical/biological characteristics (e.g., acidity, a presence of one or more particular chemical or biological agents, bacteria, etc.) and provide one or more signals based on measured values of the signals or characteristics. Yet other examples of a signal source **8400** include various types of scanners, image recognition systems, voice or other sound recognition systems, artificial intelligence and robotics systems, and the like.

A signal source **8400** could also be a lighting unit **102**, a processor **3600**, or any one of many available signal generating devices, such as media players, MP3 players, computers, DVD players, CD players, television signal sources, camera signal sources, microphones, speakers, telephones, cellular phones, instant messenger devices, SMS devices, wireless devices, personal organizer devices, and many others.

Many types of signal source **8400** can be used, for sensing any condition or sending any kind of signal, such as temperature, force, electricity, heat flux, voltage, current, magnetic field, pitch, roll, yaw, acceleration, rotational forces, wind, turbulence, flow, pressure, volume, fluid level, optical properties, luminosity, electromagnetic radiation, radio frequency radiation, sound, acoustic levels, decibels, particulate density, smoke, pollutant density, positron emissions, light levels, color, color temperature, color saturation, infrared radiation, x-ray radiation, ultraviolet radiation, visible spectrum radiation, states, logical states, bits, bytes, words, data, symbols, and many others described herein, described in the documents incorporated by reference herein, and known to those of ordinary skill in the arts.

In embodiments the lighting unit **102** can include a timing feature based on an astronomical clock, which stores not simply time of day, but also solar time (sunrise, sunset) and can be used to provide other time measurements such as lunar cycles, tidal patterns and other relative time events (harvest season, holidays, hunting season, fiddler crab season, etc.) In embodiments, using a timing facility, a controller **202** can store data relating to such time-based events and make adjustments to control signals based on them. For example, a lighting unit **102** can allow 'cool' color temperature in the summer and warm color temperatures in the winter.

In embodiments the sensor **8402** can be a light sensor, and the sensor can provide control of a lighting signal based on a feedback loop, in which an algorithm modifies the lighting control signal based on the lighting conditions measured by the sensor. In embodiments, a closed-loop feedback system can read spectral properties and adjust color rendering index, color temperature, color, intensity, or other lighting characteristics based on user inputs or feedback based on additional ambient light sources to correct or change light output.

A feedback system, whether closed loop or open loop, can be of particular use in rendering white light. Some LEDs, such as those containing amber, can have significant variation in wavelength and intensity over operating regimes. Some LEDs also deteriorate quickly over time. To compensate for the temperature change, a feedback system can use a sensor to measure the forward voltage of the LEDs, which gives a good indication of the temperature at which the LEDs are running. In embodiments the system could measure forward voltage over a string of LEDs rather than the whole fixture and assume an average value. This could be used to predict running temperature of the LED to within a few percent. Lifetime variation would be taken care of through a predictive curve based on experimental data on performance of the lights. Degradation can be addressed through an LED that produces amber or red through another mechanism such as phosphor conversion and does this through a more stable material, die or process. Consequently, CRI could also improve dramatically. That LED plus a bluish white or Red LED then enables a color temperature variable white source with good CRI.

In embodiments a lighting system may coordinate with an external system **8800**, such as to trigger lighting shows or effects in response to events of the external system, to coordinate the lighting system with the other system, or the like. External systems **8800** can include other lighting systems **100**, entertainment systems, security systems, control systems, information technology systems, servers, computers, personal digital assistants, transportation systems, and many other computer-based systems, including control signals for specific commercial or industrial applications, such

as machine vision systems, photographic systems, medical systems, pool systems, spa systems, automotive systems, and many others.

A lighting system **100** can be used to produce various effects **9200**, including static effects, dynamic effects, meta effects, geometric effects, object-oriented shows and the like. Effects can include illumination effects **9300**, where light from a lighting unit **102** illuminates another object, such as a wall, a diffuser, or other object. Illumination effects **9300** include generating white lighting with color-temperature control. Effects can also include direct view effects **9400**, where light sources **300** are viewed directly or through another material. Direct view effects includes displays, works of art, information effects, and others. Effects can include pixel-like effects, effects that occur along series or strings of lighting units **102**, effects that take place on arrays of lighting units **102**, and three-dimensional effects.

In various embodiments of the present invention, the lighting unit **102** shown in FIG. **2** may be used alone or together with other similar lighting units in a system of lighting units (e.g., as discussed further below in connection with FIG. **2**). Used alone or in combination with other lighting units, the lighting unit **102** may be employed in a variety of applications including, but not limited to, interior or exterior space illumination in general, direct or indirect illumination of objects or spaces, theatrical or other entertainment-based/special effects illumination, decorative illumination, safety-oriented illumination, vehicular illumination, illumination of displays and/or merchandise (e.g. for advertising and/or in retail/consumer environments), combined illumination and communication systems, etc., as well as for various indication and informational purposes.

Referring to FIG. **48**, an effect **9200** can include a symbolic effect, such as a sign **1204** disposed on the exterior of a building **4800** or on an interior wall or other object. Such a sign **1204** can be displayed many other places, such as inside a building, on a floor, wall, or ceiling, in a corridor, underwater, submerged in a liquid other than water, or in many other environments. A sign **1204** can consist of a backlit display portion and a configuration, such as of letters, numbers, logos, pictures, or the like. The lighting of the backlit portion and the configuration can be coordinated to provide contrasting colors and various aesthetic effects.

Referring to FIG. **48**, an object **4850** is lit by a lighting system **4850**. In this case the object **4850** is a three-dimensional object. The object **4850** can also be lit internally, to provide its own illumination. Thus, the object **4850** can include color and color temperature of light as a medium, which can interact with changes in color and color temperature from the lighting system **4850**. FIG. **48** depicts a foreground object **4850** and a background **4852**, both with lighting units **102**. Thus, both the foreground object **4850** and the background **4852** can be illuminated in various colors, intensities or color temperatures. In an embodiment, the illumination of the foreground object **4850** and the background **4852** can be coordinated by a processor **3600**, such as to produce complementary illumination. For example, the colors of the two can be coordinated so that the color of the background **4852** is a complementary color to the color of the foreground object **4850**, so when the background **4852** is red, the foreground object **4850** is green, etc. Any object **4850** in any environment can serve as a foreground object **4850**. For example, it might be an item of goods in a retail environment, an art object in a display environment, an emergency object in a safety environment, a tool in a working environment, or the like. For example, if a processor **3600** is part of a safety system, the object **4850** could be a fire extinguisher, and the background **4852** could be the case that holds the extinguisher, so that the extinguisher is illuminated upon a fire alert to make it maximally noticeable to a user. Similarly, by managing the contrast between the background **4852** and the object **4850**, an operator of a retail environment can call attention to the object **4850** to encourage purchasing.

In embodiments linear strings or series of lights can embody time-based effects **4854**, such as to light a lighting unit **102** in a series when a timed-pulse crosses the location of that lighting unit **102**.

Effects can be designed to play on arrays **4860**, such as created by strings of lighting units **102** that are arranged in such arrays. Effects can be designed in accordance with target areas **4862** that are lit by lighting units **102**, rather than in accordance with the lighting units **102** themselves.

Referring to FIG. **49**, effects can be tied to a sensor **8402** that detects motion in proximity to a lighting unit **102**. Waving a hand or other object in proximity to the sensor **8402** can trigger shows or effects. Effects can also play out over arrays, such as triangular configurations **9258** and rectangular arrays **9260**. Effects can cause shows to play out over such arrays in a wide range of effects, such as a bounce effect **9260**. In embodiments a lighting system **9250** illuminates an object **9252**. Depending on the color of the object, it may either be highlighted or not based on the color of the illumination. For example, red illumination will highlight a red object, but blue illumination will make the red object appear dark. Systems can produce motion effects **9262** by illuminating in different colors over time, so that different items appear highlighted at different times, such as the wings **9262** of different colors in FIG. **49**.

Referring to FIG. **50**, in embodiments of the methods and systems provided herein, the lighting systems further include disposing at least one such lighting unit on a building **5050**. In embodiments the lighting units are disposed in an array on a building. In embodiments the array is configured to facilitate displaying at least one of a number, a word, a letter, a logo, a brand, and a symbol. In embodiments the array is configured to display a light show with time-based effects. In other embodiments lighting units may be disposed on interior walls **5052** to produce such effects.

Lighting systems **100** can be found in a wide range of environments **9600**. Referring to FIG. **51**, environments **9600** include airline environments **5102** and other transportation environments, home exterior environments **5108**, such as decks, patios and walkways, seating environments **5104** such as in airline cabins, buses, boats, theatres, movies, auditoriums and other seating environments, building environments **5110**, such as to light a profile of a building, pool and spa environments **5112**, cylindrical lighting environments **5114**, domed lighting environments **5118** and many others. Referring to FIG. **52**, environments **9600** can include airline cabins **5202**, bus environments **5204**, medical and surgical environments **5208**, dressing room environments **5210**, retail display environments **5212**, cabinet environments **5214**, beauty environments **5218**, work environments **5220**, and under-cabinet environments **5222**. Referring to FIG. **53**, additional environments **9600** include home entertainment environments **5302**, motion picture and other camera environments **5304**, recreational environments **5308**, such as boating, interior environments **5310**, seating environments **5312**, railings **5318**, stairs **5320** and alcoves **5314**. Referring to FIG. **54**, environments **9600** can include automobiles **5402**, appliances **5404**, trees and plants **5408**, houses **5410**, playing fields and courts **5412**, display environments **5414**, signage environments **5418**, ceiling tiles

5420, signaling environments 5422, marine signaling environments 5424, theatrical environments 5428 and bowling environments 5430. Referring to FIG. 55, other environments 9600 include swimming environments 5502, military and aircraft environments 5504, industrial environments 5508, such as hangars and warehouses, house environments 5520, train environments 5512, automotive environments 5514, such as undercar lightings, fireplace environments 5518 and landscape environments 5520.

The various concepts discussed herein may be suitably implemented in a variety of environments involving LED-based light sources, other types of light sources not including LEDs, environments that involve both LEDs and other types of light sources in combination, and environments that involve non-lighting-related devices alone or in combination with various types of light sources.

The combination of white light with light of other colors as light sources for lighting units 102 can offer multi-purpose lights for many commercial and home applications, such as in pools, spas, automobiles, building interiors (commercial and residential), indirect lighting applications, such as alcove lighting, commercial point of purchase lighting, merchandising, toys, beauty, signage, aviation, marine, medical, submarine, space, military, consumer, under cabinet lighting, office furniture, landscape, residential including kitchen, home theater, bathroom, faucets, dining rooms, decks, garage, home office, household products, family rooms, tomb lighting, museums, photography, art applications, and many others.

One environment 9600 is a retail environment. An object might be an item of goods to be sold, such as apparel, accessories, electronics, toys, food, or any other retail item. The lighting units 102 can be controlled to light the object with a desired form of lighting. For example, the right color temperature of white light can render the item in a true color, such as the color that it will appear in daylight. This may be desirable for food items or for apparel items, where color is very significant. In other cases, the lighting units 102 can light the item with a particular color, to draw attention to the items, such as by flashing, by washing the item with a chasing rainbow, or by lighting the item with a distinctive color. In other cases the lighting can indicate data, such as rendering items that are on sale in a particular color, such as green. The lighting can be controlled by a central controller, so that different items are lit in different colors and color temperatures along any timeline selected by the user. Lighting systems can also interact with other computer systems, such as cards or handheld devices of a user. For example, a light can react to a signal from a user's handheld device, to indicate that the particular user is entitled to a discount on the object that is lit in a particular color when the user is in proximity. The lighting units 102 can be combined with various sensors that produce a signal source 8400. For example, an object may be lit differently if the system detects proximity of a shopper.

Subjects to be displayed under controlled lighting conditions also appear in other environment, such as entertainment environments, museums, galleries, libraries, homes, workplaces, and the like.

In a workplace environment lighting units 102 can be used to light the environment 9600, such as a desk, cubicle, office, workbench, laboratory bench, or similar workplace environment. The lighting systems can provide white and non-white color illumination of various colors, color temperatures, and intensities, so that the systems can be used for conventional illumination as well as for aesthetic, entertainment, or utilitarian effects, such as illuminating workplace objects with preferred illumination conditions, such as for analysis or inspection, presenting light shows or other entertainment effects, or indicating data or status. For example, coupled with a signal source 8400, such as a sensor, the workplace lighting systems could illuminate in a given color or intensity to indicate a data condition, such as speed of a factory line, size of a stock portfolio, outside temperature, presence of a person in an office, whether someone is available to meet, or the like.

In embodiments, lighting systems can include an architectural lighting system, an entertainment lighting system, a restaurant lighting system, a stage lighting system, a theatrical lighting system, a concert lighting system, an arena lighting system, a signage system, a building exterior lighting system, a landscape lighting system, a pool lighting system, a spa lighting system, a transportation lighting system, a marine lighting system, a military lighting system, a stadium lighting system, a motion picture lighting system, photography lighting system, a medical lighting system, a residential lighting system, a studio lighting system, and a television lighting system.

In embodiments of the methods and systems provided herein, the lighting systems can be disposed on a vehicle, an automobile, a boat, a mast, a sail, an airplane, a wing, a fountain, a waterfall or similar item. In other embodiments, lighting units can be disposed on a deck, a stairway, a door, a window, a roofline, a gazebo, a jungle gym, a swing set, a slide, a tree house, a club house, a garage, a shed, a pool, a spa, furniture, an umbrella, a counter, a cabinet, a pond, a walkway, a tree, a fence, a light pole, a statue or other object.

FIG. 56 depicts a board 204 disposed in the interior of a linear housing 800 for a lighting system 100. In embodiments the system 100 may be used as a large fixture for architectural lighting, theatrical lighting, retail lighting, visual merchandising and other applications where a large amount of light output is desired from the lighting system 100. In embodiments the light sources 300 are high-power LEDs, such as Luxeon five watt LEDs from Lumileds. The housing 800 may have a channel 5650 that provides an internal space, such as containing air, between the board 204 that supports the light sources 300 and the power facility 1800. In embodiments all of the components for a power facility 1800 are contained in the interior of the housing 800. Separated main extrusions prevent heat conduction between power facility 1800 and the board 204 (which may be a printed circuit board (PCB) and the light sources 300 that reside on the board 204. The central channel 5650 serves as a ventilator and as an insulating channel between the two heat sources, namely, the light sources 300 and the power facility 1800. In addition, the central channel 5650 assists in forcing heat out to a plurality of fins 5652. The fins 5652 assist the system 100 in dissipating heat produced by the light sources 300 and the power facility 1800. By shielding the light sources 300 from heat produced by the power facility 1800 and channeling heat produced by the light sources 300 away from the light sources 300, the system 100 allows heat-sensitive light sources 300 such as semiconductor-based light sources 300 to survive longer, particularly in environments where ambient temperatures are high and in applications that require high light output, such as theatrical applications.

In embodiments the system 100 can have a thermal facility in the form of an integral exhaust fan that can be used to exhaust air from the housing, from the middle of the housing 800 or from the ends. Locating in the middle however means that the hot exhausted air is not traveling over all of the heat-generating boards inside and instead is

moving across at most half of the length of the boards. In embodiments there can be a thermal sensor mounted (epoxied) to the input capacitor on the power facility **1800**. As that capacitor heats up it can turn the fan on. In embodiments the fan is only turned on at half of the rated voltage to minimize acoustic noise and prolong the life of the fan. Upon the thermal sensor reaching a preset upper limit, the fan can turn on to full. The fan speed can be a function of the temperature measurement or simply cycled on or off depending on needs of the user.

A plurality of slots **5654**, such as T-slots, can be added into the interior of the housing **800** to assist in the mounting of internal hardware such as the board **204** and the power facility **1800**. Slots **5658** and **5660** can be provided to hold and fasten a lens and bottom cover, respectively.

FIG. **57** depicts the extruded housing **800** of FIG. **56** and the bottom cover **5750** that is configured to snap into the slots **5660**.

FIG. **58** depicts a bracket mechanism **5850** for a housing **800** of a lighting system **100**. The bracket **5850** can include holes **5860** that allow the bracket **5850** to be attached to a surface, such as a floor, wall, beam, ceiling, or other surface. The bracket **5850** can be connected by a knob **5858** to a stamped end plate **5854** of the housing **800**. A washer **5852** or piece of plastic between the bracket **5850** and the end plate **5854** can allow adjustment of the position of the housing **800** relative to the bracket **5850**, such as to adjust the angle of illumination coming from the system **100**. The washer **5852** can prevent wear of the end plate **5854** and mounting bracket **5850**. In embodiments there can be a pattern on the end plate **5854**, such as to increase friction between the end plate **5854** and the stamped mounting bracket **5850** to allow easy and fine adjustment of the angle of the fixture. The pattern can be stamped on the bracket **5850** and die cast on the end plate **5854**.

FIG. **59** depicts additional detail of an end plate **5854** for a housing **800** for a lighting system **100**. The end plate **5854** provides a ridge of friction to allow the system to be locked into place if the knob **5858** is tightened. Features on the end plate **5854** can be both aesthetic in nature and provide a strengthening through additional dimensions out of the plane of the end cap.

FIG. **60** depicts an end view of the bracket **5850** mounting system for the lighting system **100**.

FIG. **61** provides an additional end view of a bracket **5850** mounting system for the lighting system **100**.

FIG. **62** depicts an interior structure for a linear lighting system **100** showing the location of the channel **5650** and the heat-dissipating fins **5652**.

FIG. **63** is a schematic diagram for the parts of a linear lighting system **100** showing the ventilating channel **5650** and the fins **5652** for dissipating heat from the light sources **300** on the board **204** and the power facility **1800**. As shown by the arrows **6350**, heat is predicted to flow away from the light sources **300** around the channel **5650** and to the fins **5652** where it is ventilated into the air.

FIG. **64** shows a structure for a housing for a lighting system. A tether **6454** can be sandwiched between an end plate **6452** and the main portion of the housing **800**. A knob **6450** can increase the pressure of the end plate **6452** on the tether **6454**, holding the housing in place **800**, or can decrease the pressure, allowing the housing **800** to move relative to tether **6454**.

FIG. **65** shows connectors for a control facility for a lighting system. A connector **6550** connects a control board **6552** to the other control elements within the housing **800**. The control board **6552** can connect, for example, to an LCD display that allows control of the light system **800**. In embodiments a stamped plate holding connectors and the display attaches to the cover of the lighting system **100**, rather than the main housing **800**.

FIG. **66** shows additional details of connectors for a control facility for a lighting system.

FIG. **67** shows a schematic diagram of a control facility for a lighting system with an LCD or LED display that shows groups of lighting units to be controlled. In embodiments the lighting system **100** has individually drive lighting units **102**. In embodiments one mode of user interface is group **6750** selection of lighting unit **102** addresses from one to twelve, or groups of two (six boards per address), three (four boards per address), four (three boards per address) and six boards (two boards per address). In embodiments all groups are comprised of adjacent boards. In one embodiment a second selector switch can be used to select a base address. A press and hold interface allows selection from a large number of addresses. The numbers in the display increment more quickly as the button is held down a longer period of time. In embodiments the displays automatically dim when not in use. The displays can come on in full intensity when in use. In embodiments a test button **6752** allows a user to verify addressing and grouping. With the test button, the lighting system can, for example, turn on red, then green, then blue to verify that the system is working. In embodiments the groups are then displayed in numerical order and turned on sequentially for a short period of time.

FIG. **68** shows another view of the extruded housing **800** for a linear lighting system **100** with the channel **5650** and the fins **5654**. The curved cover **5750** seats into the housing **800** on one side and can be fastened with mechanical fasteners on the flange on the other side.

FIG. **69** shows a side view of a mounting bracket **5850** for a lighting system **100**.

FIG. **70** shows a view of the mounting bracket **5850** as well as a view of the interior of the housing **800**, including the channel **5650**. In embodiments such as depicted in FIG. **69** and FIG. **70** the bracket **5850** provides a positive engagement with the end plate of the housing **800**. In embodiments self-tapping screws seat directly into round features in the extrusion of the housing **800**.

FIG. **71** shows a cutaway view of components of a linear lighting system **100**, including the boards **204**, the housing **800**, the end plate **5854**, and the channel **5650**. A variety of features are built into the extrusion to facilitate location and assembly of all subcomponents. This includes the T-slots **5654** (similar to those used on machine tools) for mounting, which act like secure rails to attach and locate components within the housing.

Another notable feature is the mounting **7152** for the lens cover **7154**. The mounting **7152** features a clip on one side that slides into the extrusion of the housing **800** and then snaps into a similar feature on the other side. With accurate dimensioning and sizing this clip can be inserted with a small amount of spring and force to create a tight fit. This provides fastening capability with little or no hardware and gives a degree of protection so no additional seals are required. In embodiments all electrical boards use an aluminum-based metal core board to maximize thermal transfer.

FIG. **72** shows a linear lighting system **100** with the housing **800**. A modular power supply **7250** is connected to the outside of the housing **800**. An extension cord **7252** ends in a conventional connector **7254**. In embodiments the power supply can be attached to any point along the extrusion, making it flexible depending on the application and the

installation. The power supply **7250** can be located off-board the housing **800** and, if necessary, additional extension cords can be used inline to give greater distance.

FIG. **73** shows a submersible fixture **7350** that can bring color-changing light to any type of underwater location, including water treated with harsh chemicals, such as bromine and chlorine. The fixture may be sealed to ensure its watertight integrity. The unit can include a cast bronze housing **800** and a unified power and data cable to minimize wiring. In embodiments the fixture **7350** can project light at a twenty-two degree beam angle through a frosted and tempered glass lens, but light sources **300** can be selected to provide nearly any light profile. For this application the printed circuit board **204** can use a special copper metal core board to maximize heat transfer and provide an additional safety feature for immersion in water in the event of slight leakage. The fixture also provides control and set positioning via friction and serrated fittings for pan and tilt of the fixture.

FIG. **74** provides different views of the fixture shown in FIG. **73**.

While the invention has been described in connection with certain preferred embodiments, other embodiments will be recognized by those of ordinary skill in the art and are encompassed herein.

The invention claimed is:

1. A lighting method, comprising:

providing a substantially linear housing having a first cavity extending longitudinally therein, the first cavity holding a circuit board, the circuit board supporting a plurality of LED light sources;

providing a power facility for providing power to the light sources; and

providing a channel extending longitudinally within the housing and spaced apart from the first cavity between the circuit board and the power facility for shielding the light sources from heat produced by the power facility.

2. A lighting method, comprising:

providing a substantially linear housing having a first cavity extending longitudinally therein, the first cavity holding a circuit board, the circuit board supporting a plurality of LED light sources;

providing a power facility for providing power to the light sources:

providing a channel extending longitudinally within the housing and spaced apart from the first cavity between the circuit board and the power facility for shielding the light sources from heat produced by the power facility: and

locating the power facility in a second cavity extending longitudinally within the housing and spaced part from the channel.

3. A method of claim **2**, wherein the power facility is a power-factor-corrected power facility.

4. A method of claim **1**, wherein the power facility is exterior to the housing.

5. A method of claim **1**, wherein the power facility is a modular power supply that can be positioned movably on the outside of the housing.

6. A method of claim **1**, further comprising providing a plurality of fins for dissipating heat from the housing.

7. A method of claim **1**, further comprising providing a plurality of mounting brackets for positioning the housing on a surface.

8. A method of claim **1**, further comprising providing a fan for circulating air within the housing to dissipate heat from the light sources and the power facility.

9. A method of claim **8**, further comprising providing a thermal sensor, wherein the fan operates in response to a temperature condition sensed by the thermal sensor.

10. A lighting system, comprising:

a substantially linear housing having a first cavity extending longitudinally within the linear housing;

a circuit board positioned within the first cavity;

a plurality of LED light sources, the light sources supported within the first cavity by the circuit board;

a power facility for providing power to the light sources; and

a first channel extending longitudinally within the housing and spaced apart from the first cavity between the circuit board and the power facility for shielding the light sources from heat produced by the power facility.

11. A lighting system, comprising:

a substantially linear housing having a first cavity extending longitudinally within the linear housing:

a circuit board positioned within the first cavity;

a plurality of LED light sources, the light sources supported within the first cavity by the circuit board;

a power facility for providing power to the light sources;

a first channel extending longitudinally within the housing and spaced apart from the first cavity between the circuit board and the power facility for shielding the light sources from heat produced by the power facility; and

a second channel extending longitudinally within the housing and spaced apart from the first channel, wherein the power facility is positioned within the second channel.

12. A system of claim **11**, wherein the power facility is a power-factor-corrected power facility.

13. A system of claim **10**, wherein the power facility is exterior to the housing.

14. A system of claim **10**, wherein the power facility is a modular power supply that can be positioned movably on the outside of the housing.

15. A system of claim **10**, further comprising a plurality of fins for dissipating heat from the housing.

16. A system of claim **10**, further comprising a plurality of mounting brackets for positioning the housing on a surface.

17. A system of claim **10**, further comprising a fan for circulating air within the housing to dissipate heat from the light sources and the power facility.

18. A system of claim **17**, further comprising a thermal sensor, wherein the fan operates in response to a temperature condition sensed by the thermal sensor.

19. A method of claim **2**, comprising providing a light transmitting lens to form an exterior wall of the first cavity.

20. A system of claim **11**, comprising a light transmitting lens forming an exterior wall of the first cavity.

21. A method of claim **1**, comprising:

group selecting the plurality of light sources into a number of differently addressable groups;

selecting a base address; and

controlling the plurality of light sources based on the selected number of differently addressable groups and the base address, such that each of the plurality of light sources in a given addressable group responds to commands issued to the given addressable group.

22. A system of claim **10**, comprising:

a user interface comprising a first selector for group selecting the plurality of light sources into a number of differently addressable groups and a second selector for selecting a base address; and

a controller arranged to receive in input from the user interface for controlling the plurality of light sources based on the selected number of differently addressable groups and the base address, such that each of the plurality of light sources in a given addressable group responds to commands issued to the given addressable group.

* * * * *

UNITED STATES PATENT AND TRADEMARK OFFICE

CERTIFICATE OF CORRECTION

PATENT NO. : 7,178,941 B2
APPLICATION NO. : 10/839765
DATED : February 20, 2007
INVENTOR(S) : Brian Roberge et al.

It is certified that error appears in the above-identified patent and that said Letters Patent is hereby corrected as shown below:

Title Page, Illustrating Figure, should be deleted, and replaced with new Title page. (Attached)

Delete Drawing Sheets 1-75 and replace with Drawing Sheets 1-86.

In the Claims:

Col. 68, claim 11, line 31 “channel” should read -- cavity --.

Col. 68, claim 11, line 34 “channel” should read -- cavity --.

Signed and Sealed this

Twenty-ninth Day of July, 2008

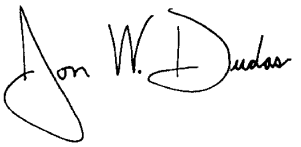

JON W. DUDAS
Director of the United States Patent and Trademark Office

(12) **United States Patent**
Roberge et al.

(10) **Patent No.: US 7,178,941 B2**
(45) **Date of Patent: Feb. 20, 2007**

(54) **LIGHTING METHODS AND SYSTEMS**

(75) Inventors: **Brian Roberge**, Franklin, MA (US); **Colin Piepgras**, Swampscott, MA (US); **Jeffrey Hyer**, Newburyport, MA (US); **Kevin McCormick**, Cambridge, MA (US); **Peter Swal**, Quincy, MA (US); **Frederick M. Morgan**, Quincy, MA (US)

(73) Assignee: **Color Kinetics Incorporated**, Boston, MA (US)

(*) Notice: Subject to any disclaimer, the term of this patent is extended or adjusted under 35 U.S.C. 154(b) by 0 days.

(21) Appl. No.: **10/839,765**

(22) Filed: **May 5, 2004**

(65) **Prior Publication Data**

US 2005/0128751 A1 Jun. 16, 2005

Related U.S. Application Data

(60) Provisional application No. 60/467,847, filed on May 5, 2003.

(51) **Int. Cl.**
F21S 4/00 (2006.01)

(52) **U.S. Cl.** **362/225**; 362/221; 362/227; 362/240; 362/249; 362/294; 362/373; 362/800

(58) **Field of Classification Search** 362/294, 362/373, 555, 227, 249, 543-545, 800, 240, 362/221, 225

See application file for complete search history.

(56) **References Cited**

U.S. PATENT DOCUMENTS

2,909,097	A	10/1959	Alden et al.
3,318,185	A	5/1967	Kott
3,561,719	A	2/1971	Grindle
3,586,936	A	6/1971	McLeroy
3,601,621	A	8/1971	Ritchie
3,643,088	A	2/1972	Osteen et al.
3,746,918	A	7/1973	Drucker et al.
3,818,216	A	6/1974	Larraburu
3,832,503	A	8/1974	Crane
3,858,086	A	12/1974	Anderson et al.
3,909,670	A	9/1975	Wakamatsu et al.
3,924,120	A	12/1975	Cox, III
3,949,213	A	4/1976	Paitchell
3,958,885	A	5/1976	Stockinger et al.
3,974,637	A	8/1976	Bergey et al.

(Continued)

FOREIGN PATENT DOCUMENTS

AU	6 267 9	12/1996

(Continued)

OTHER PUBLICATIONS

Hewlett Packard Components, "Solid State Display and Optoelectronics Designer's Catalog," pp. 30-43, Jul. 1973.

(Continued)

Primary Examiner—Stephan F Husar
Assistant Examiner—Meghan K. Dunwiddie
(74) *Attorney, Agent, or Firm*—Wolf, Greenfield & Sacks, P.C.

(57) **ABSTRACT**

Methods and systems are provided for lighting systems, including high output linear lighting systems for various environments. The linear lighting systems may include power systems for driving light sources in high-voltage environments.

22 Claims, 75 Drawing Sheets

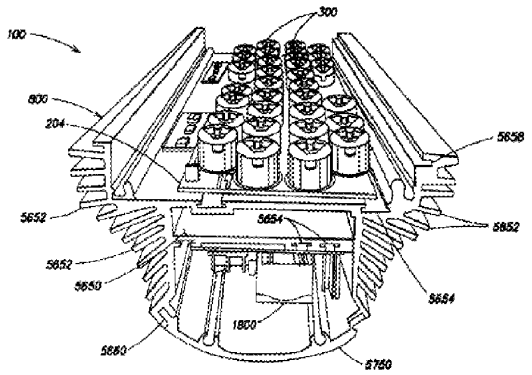

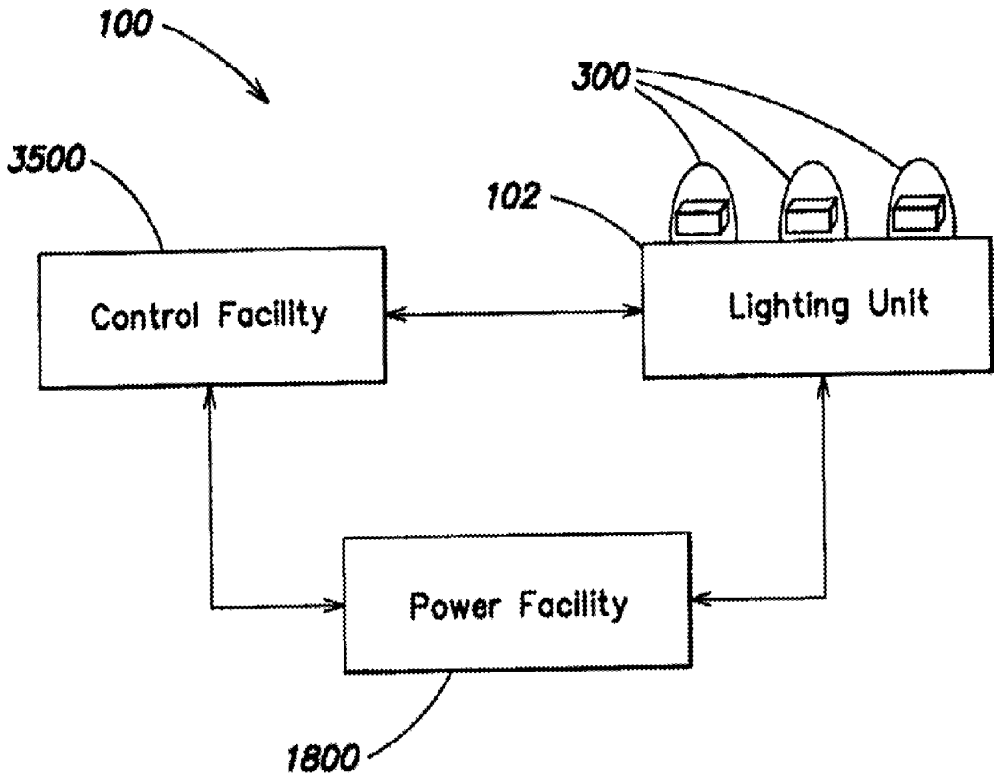
100
300
3500
102
Control Facility
Lighting Unit
Power Facility
1800

FIG. 1

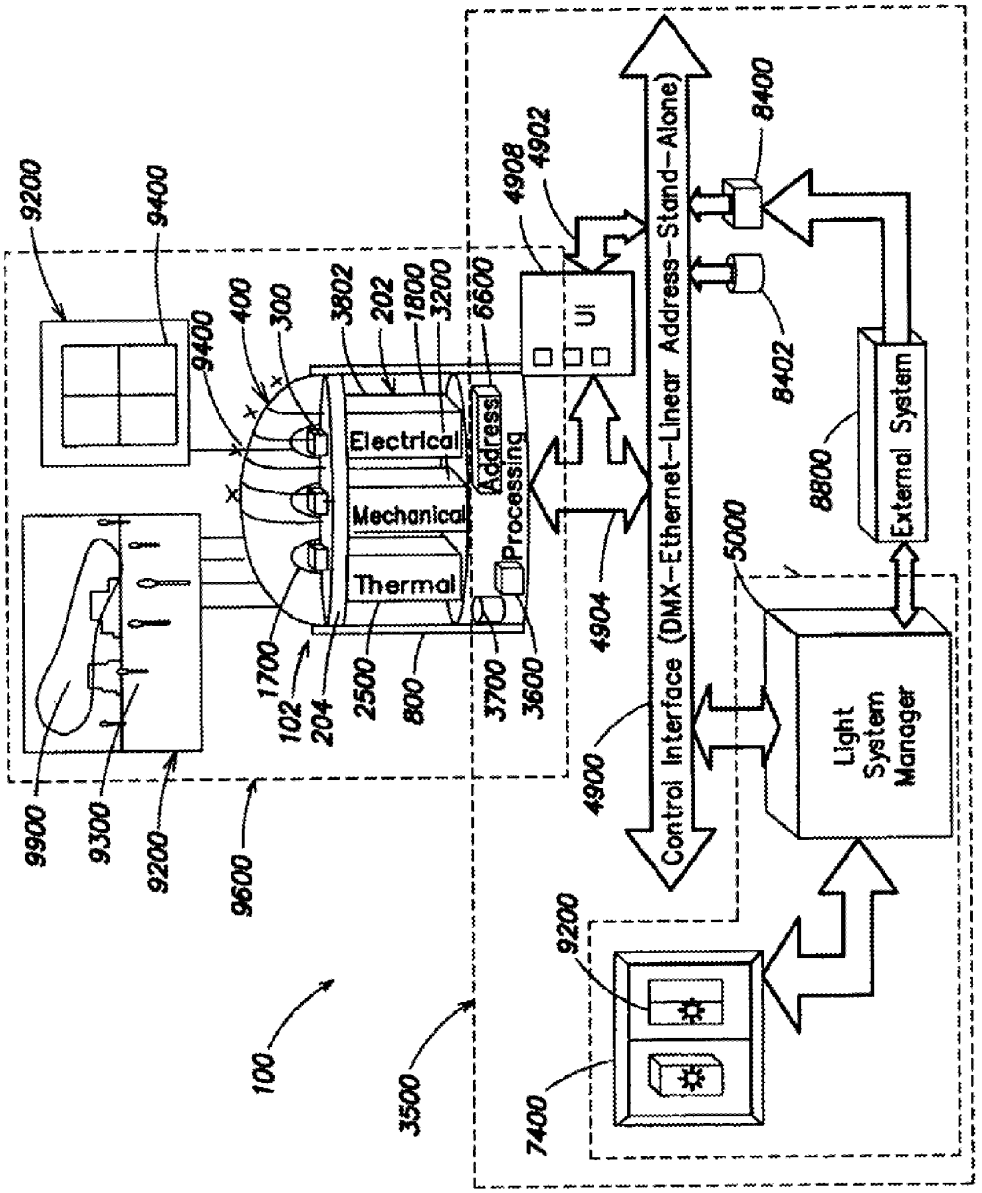
9200
9400
9400
400
300
3802
202
1800
3200
6600
4908
4902
8400
8402
UI
Electrical
Mechanical
Thermal
Address
Processing
Control Interface (DMX-Ethernet-Linear Address-Stand-Alone)
External System
8800
5000
Light System Manager
4904
4900
1700
102
204
2500
800
3700
3600
9900
9300
9200
9600
100
3500
9200
7400

FIG. 2

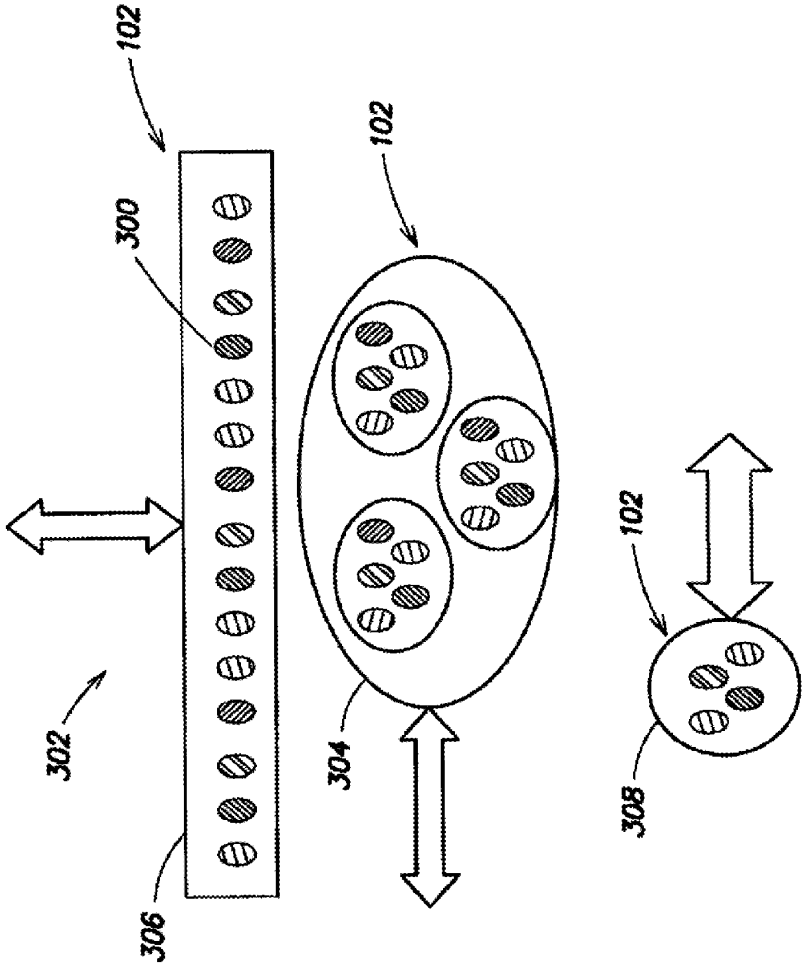

FIG. 3

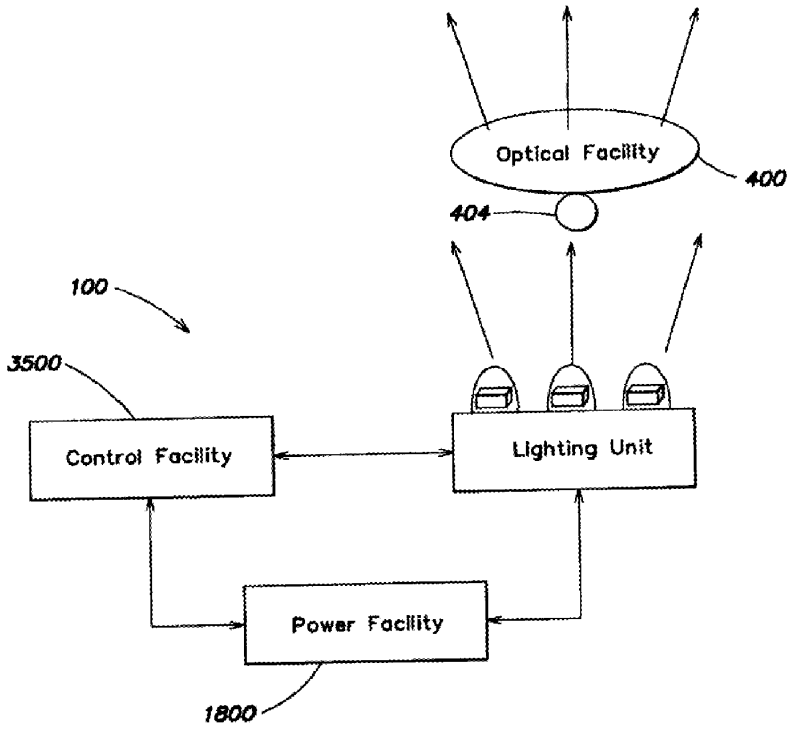
Optical Facility
400
404
100
3500
Control Facility
Lighting Unit
Power Facility
1800

FIG. 4

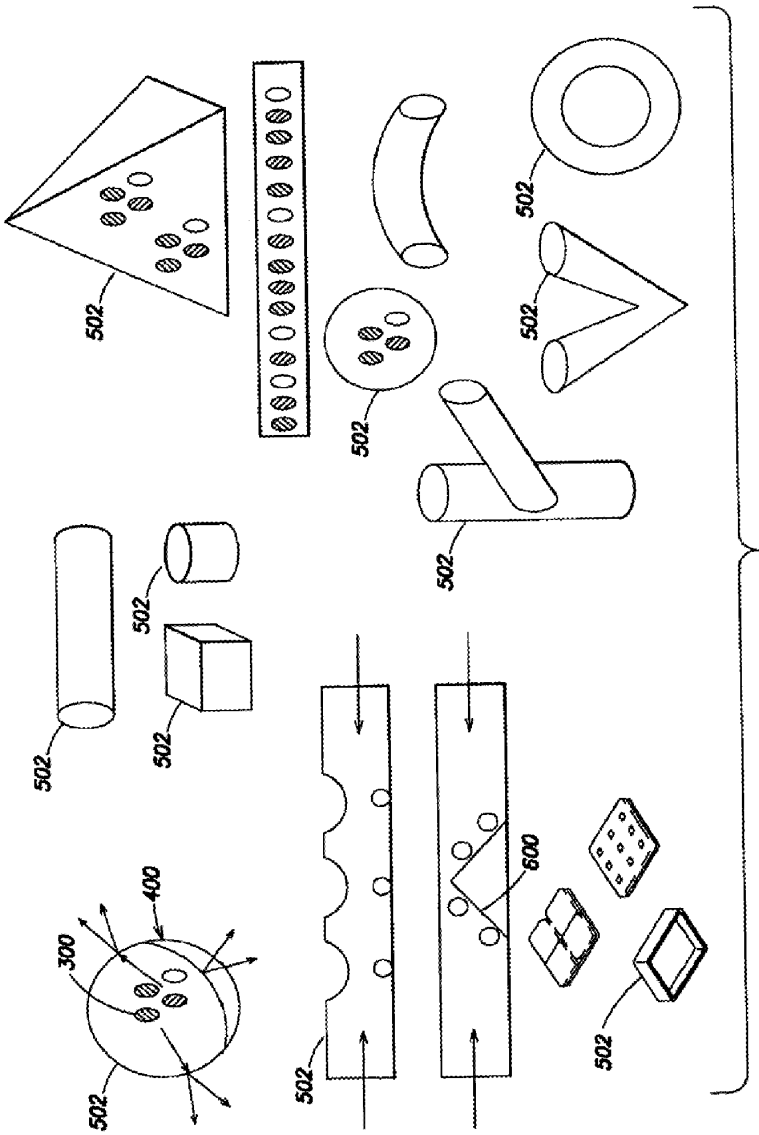

FIG. 5

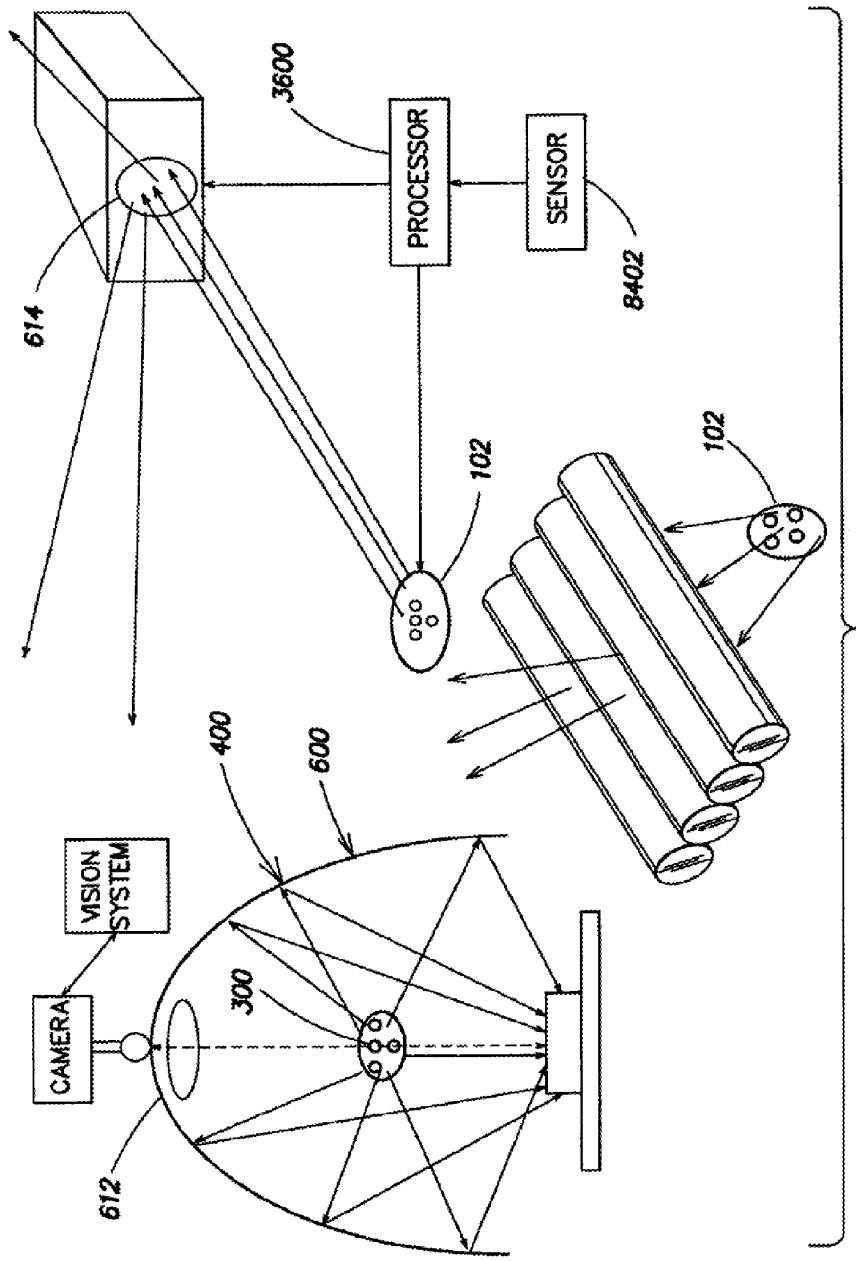
614
3600
PROCESSOR
SENSOR
8402
102
102
400
600
VISION SYSTEM
CAMERA
300
612

FIG. 6A

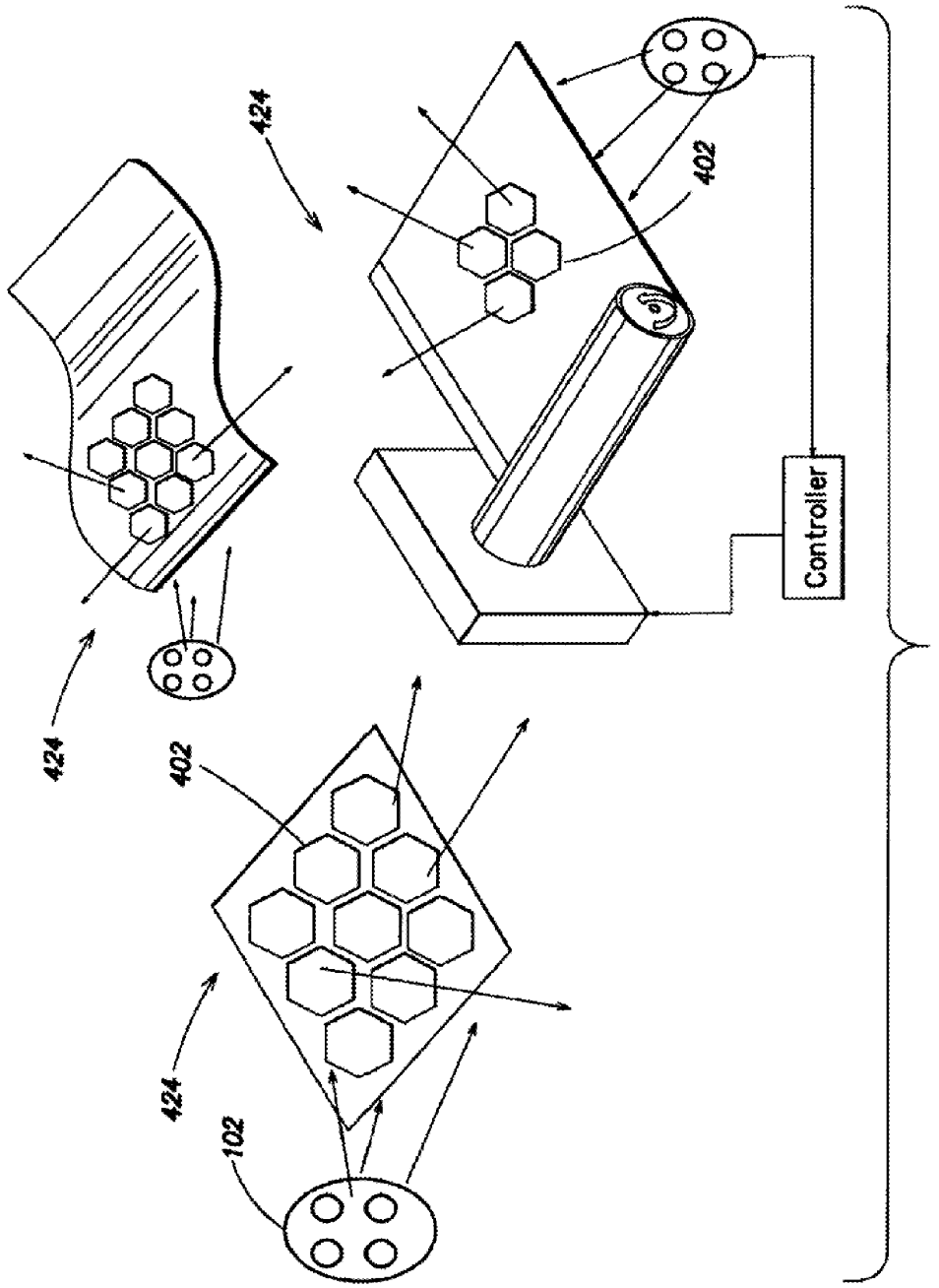

FIG. 6B

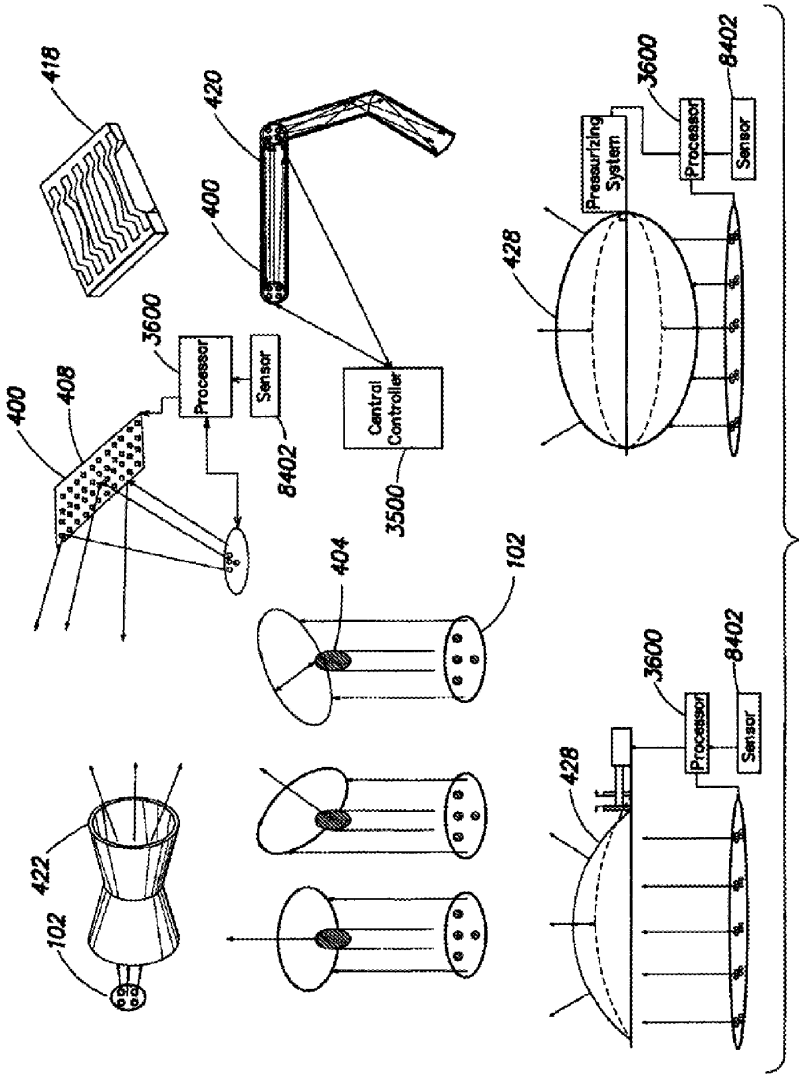
418
420
400
3600
Processor
Sensor
8402
Central Controller
3500
400
408
404
102
422
102
428
Pressurizing System
3600
Processor
8402
Sensor
428
3600
Processor
8402
Sensor

FIG. 7

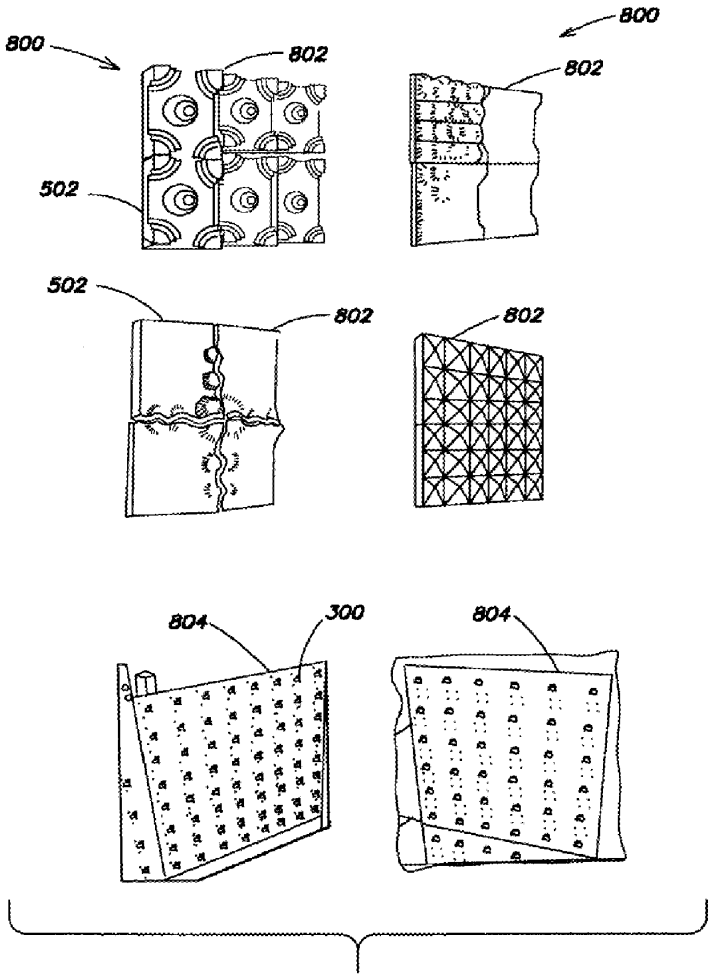

FIG. 8

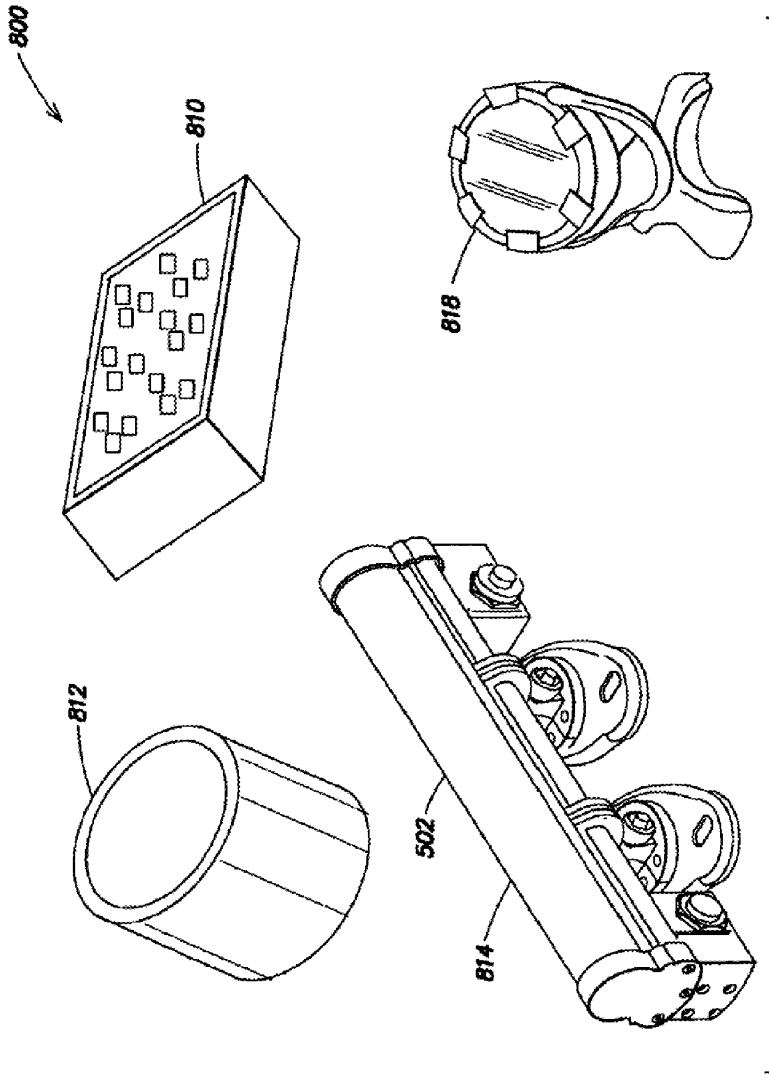

FIG. 9

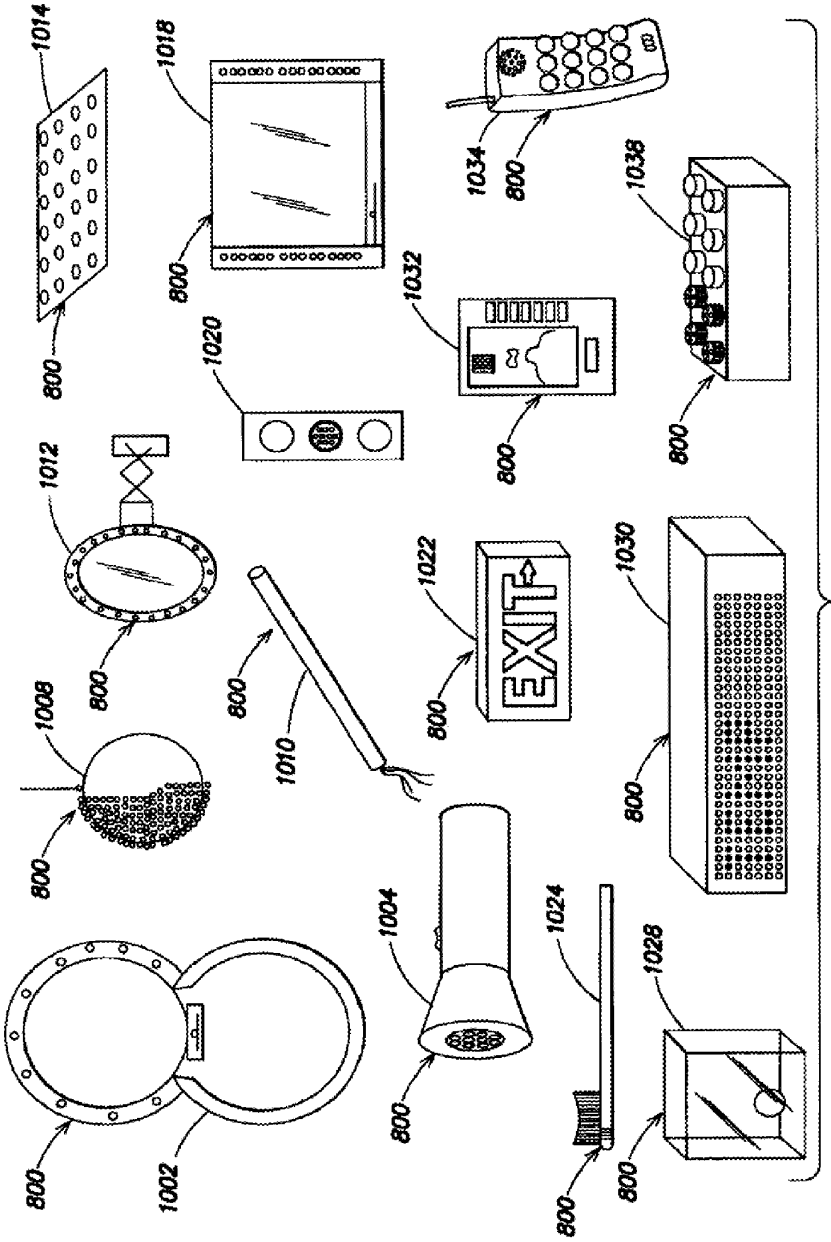
1014
1018
1034
1038
1032
1020
1012
1022
1030
1008
1010
1004
1024
1028
1002
800
EXIT

FIG. 10

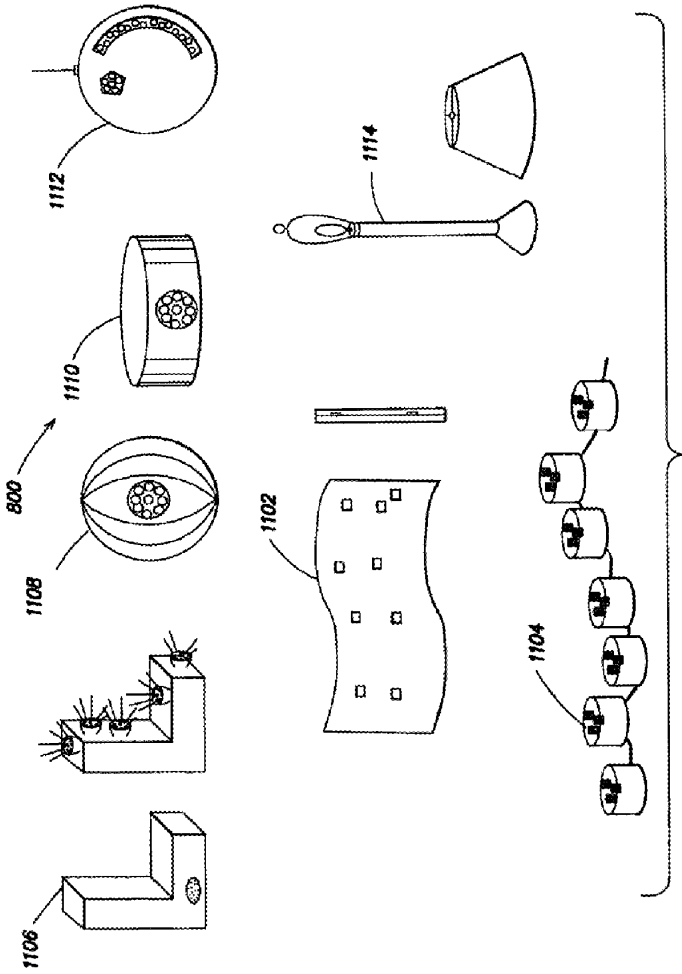

FIG. 11

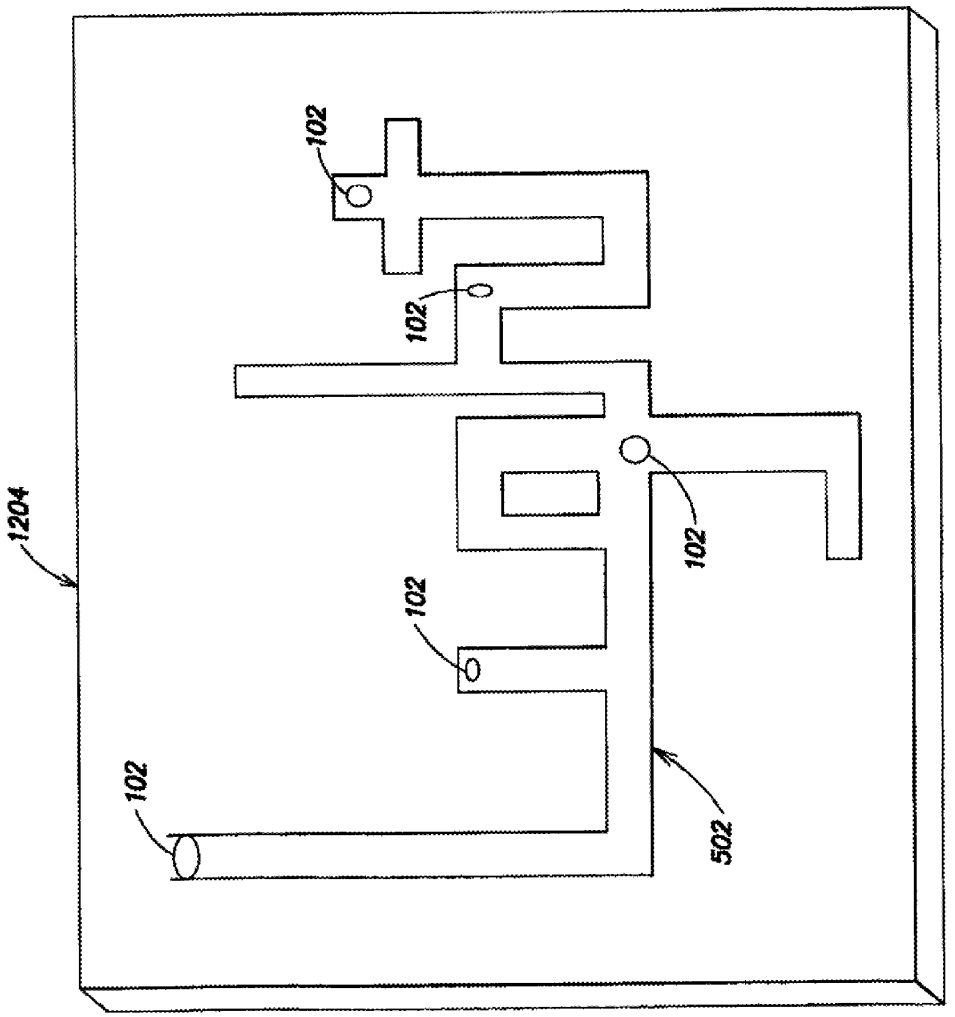

FIG. 12

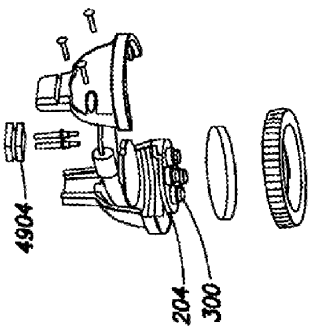

FIG. 13E

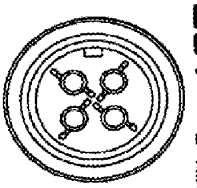

FIG. 13F

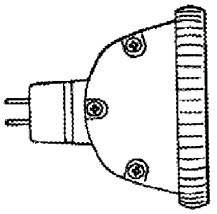

FIG. 13D

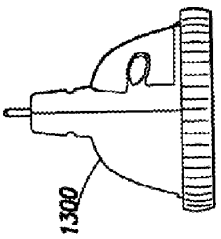

FIG. 13A

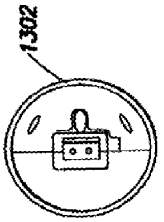

FIG. 13B

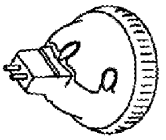

FIG. 13C

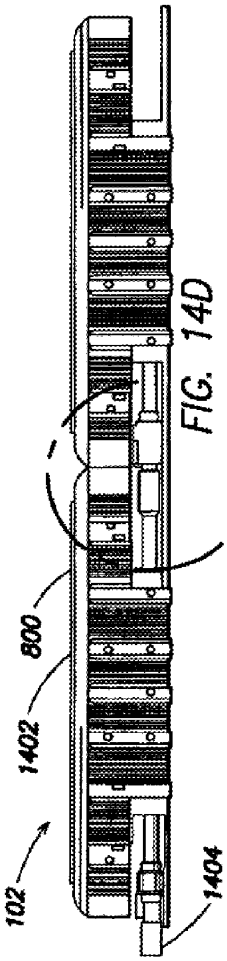

FIG. 14A

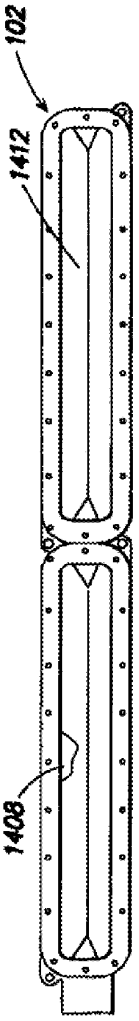

FIG. 14B

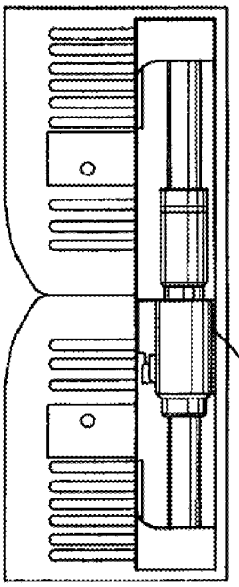

FIG. 14D

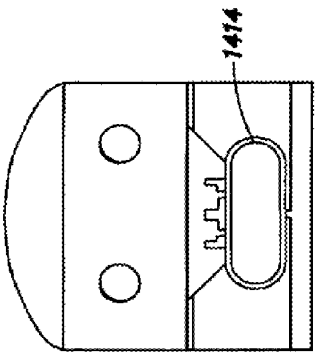

FIG. 14C

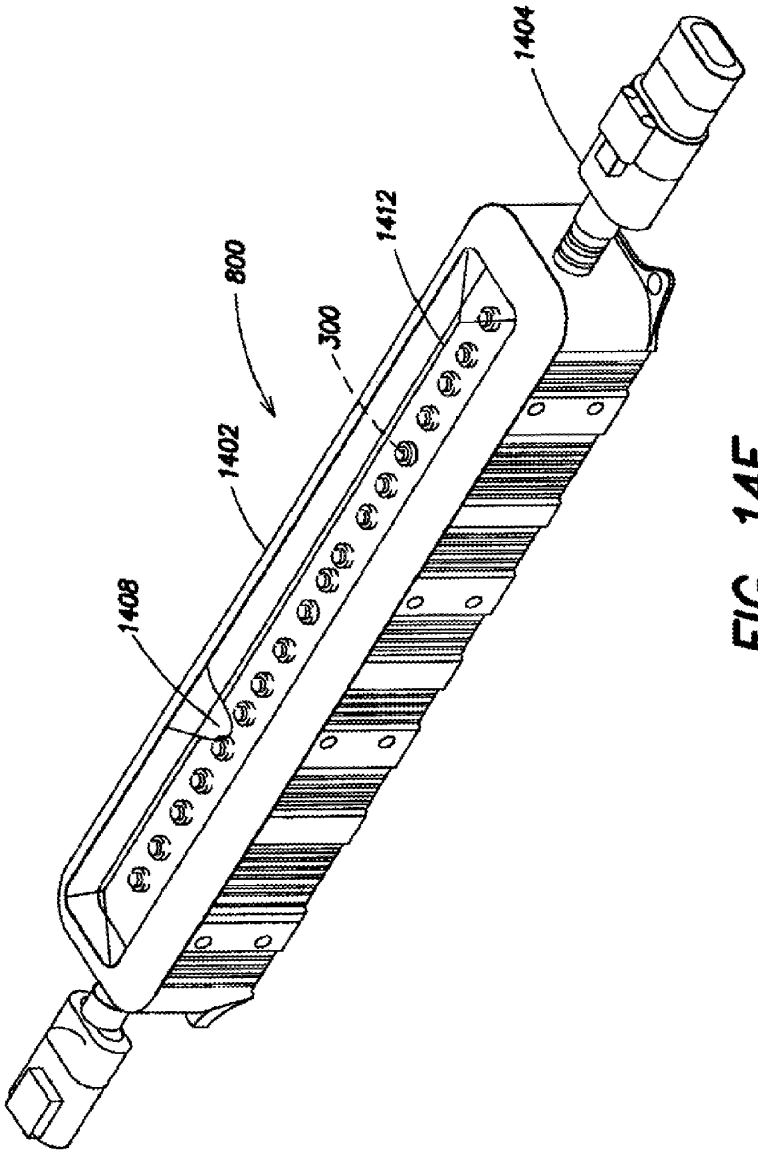

FIG. 14E

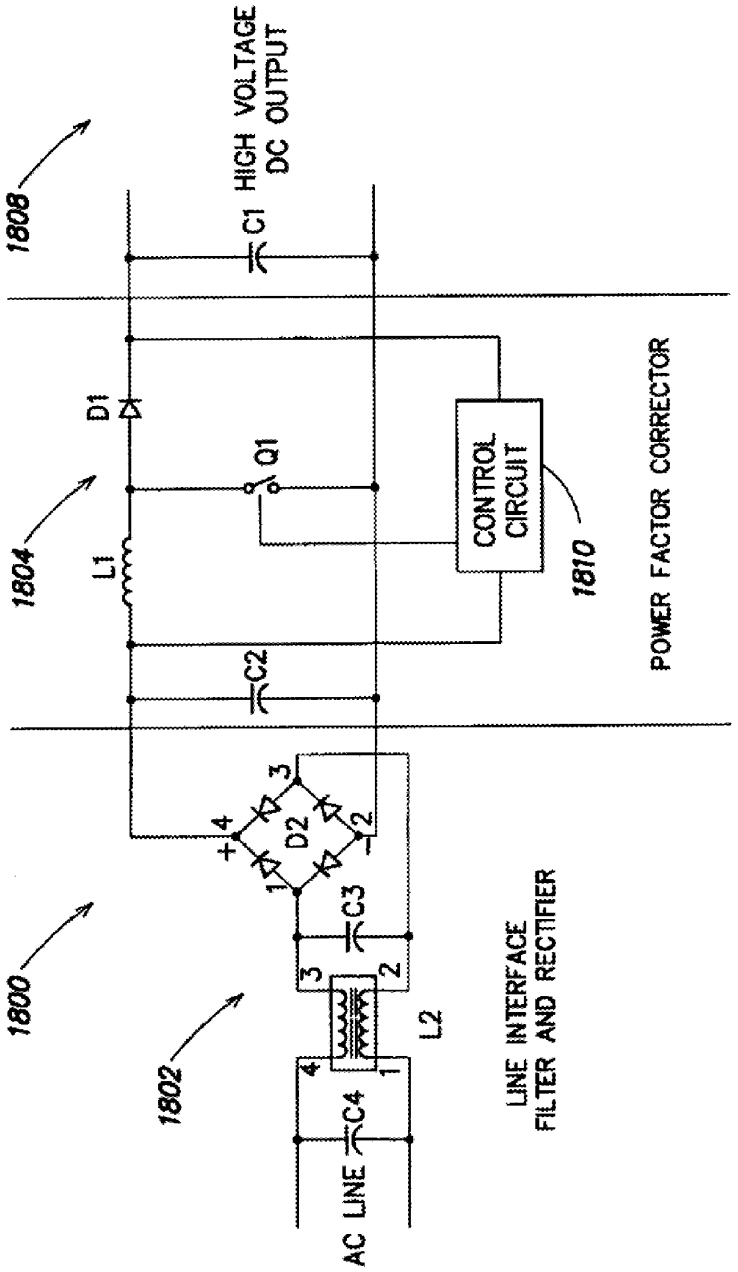
1808
HIGH VOLTAGE DC OUTPUT
C1
D1
Q1
1804
L1
CONTROL CIRCUIT
1810
POWER FACTOR CORRECTOR
C2
1800
D2
C3
1802
L2
C4
AC LINE
LINE INTERFACE FILTER AND RECTIFIER

FIG. 15

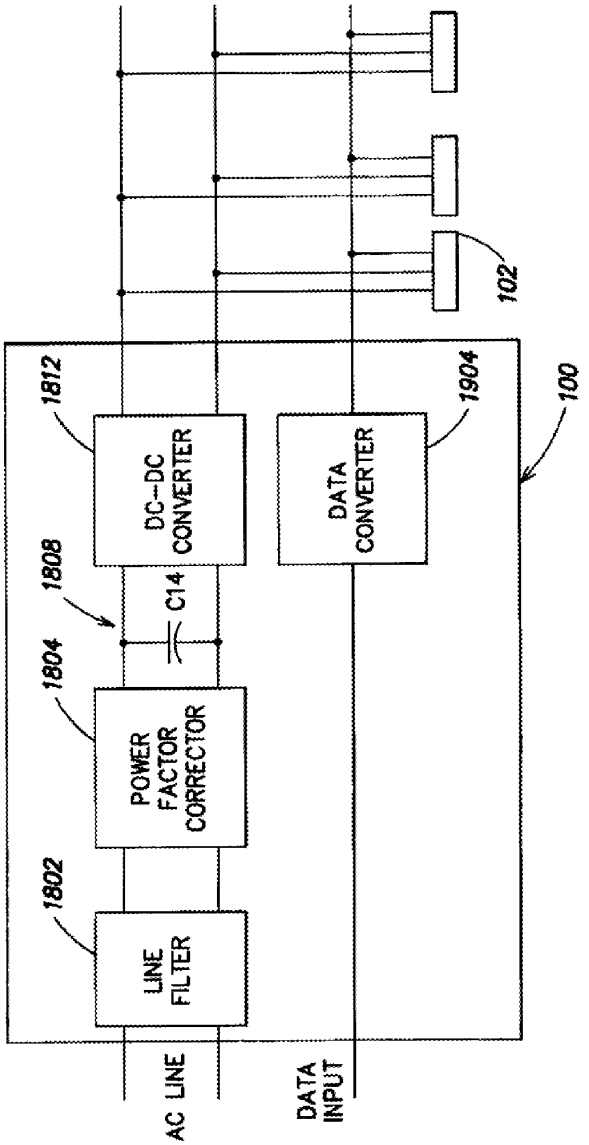
1812
DC–DC CONVERTER
1808
C14
1804
POWER FACTOR CORRECTOR
1802
LINE FILTER
AC LINE
DATA INPUT
DATA CONVERTER
1904
100
102

FIG. 16a

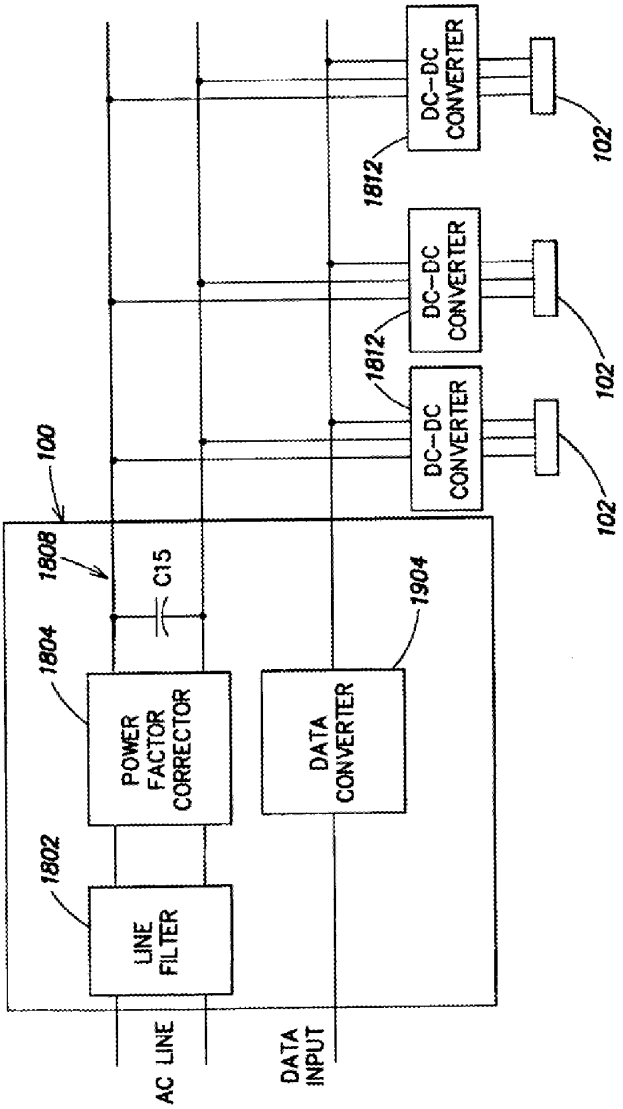
100
1808
1804
1802
LINE FILTER
POWER FACTOR CORRECTOR
C15
DATA CONVERTER
1904
AC LINE
DATA INPUT
DC–DC CONVERTER
DC–DC CONVERTER
DC–DC CONVERTER
1812
1812
102
102
102

FIG. 16b

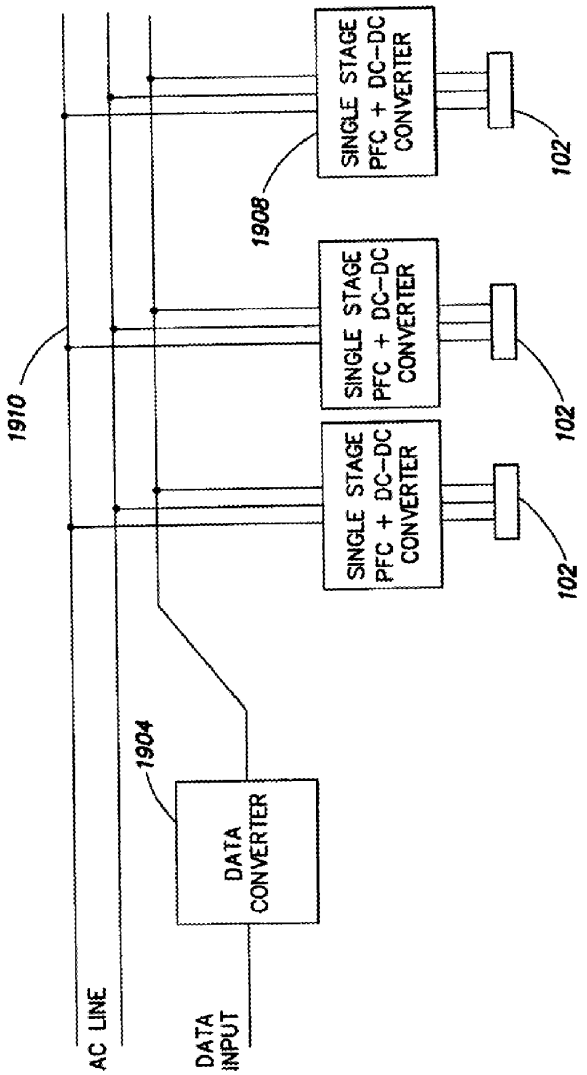
AC LINE
DATA INPUT
1904
DATA CONVERTER
1910
SINGLE STAGE PFC + DC–DC CONVERTER
SINGLE STAGE PFC + DC–DC CONVERTER
SINGLE STAGE PFC + DC–DC CONVERTER
1908
102
102
102

FIG. 17

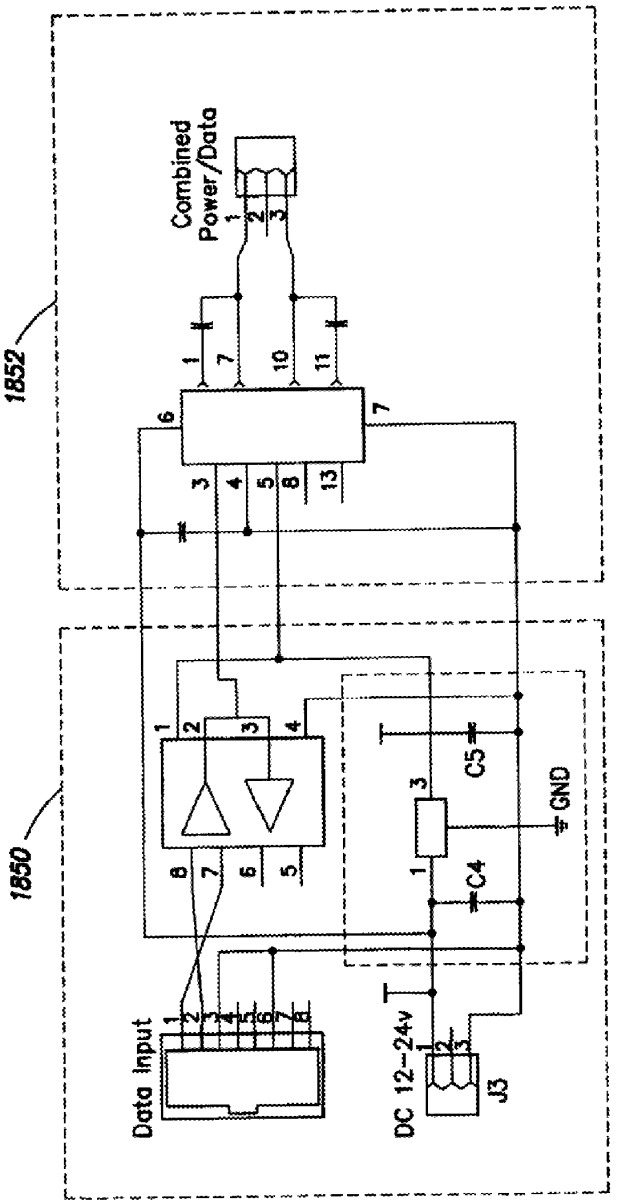
1852
1850
Combined Power/Data
Data Input
DC 12–24v
J3
C4
C5
GND

FIG. 18

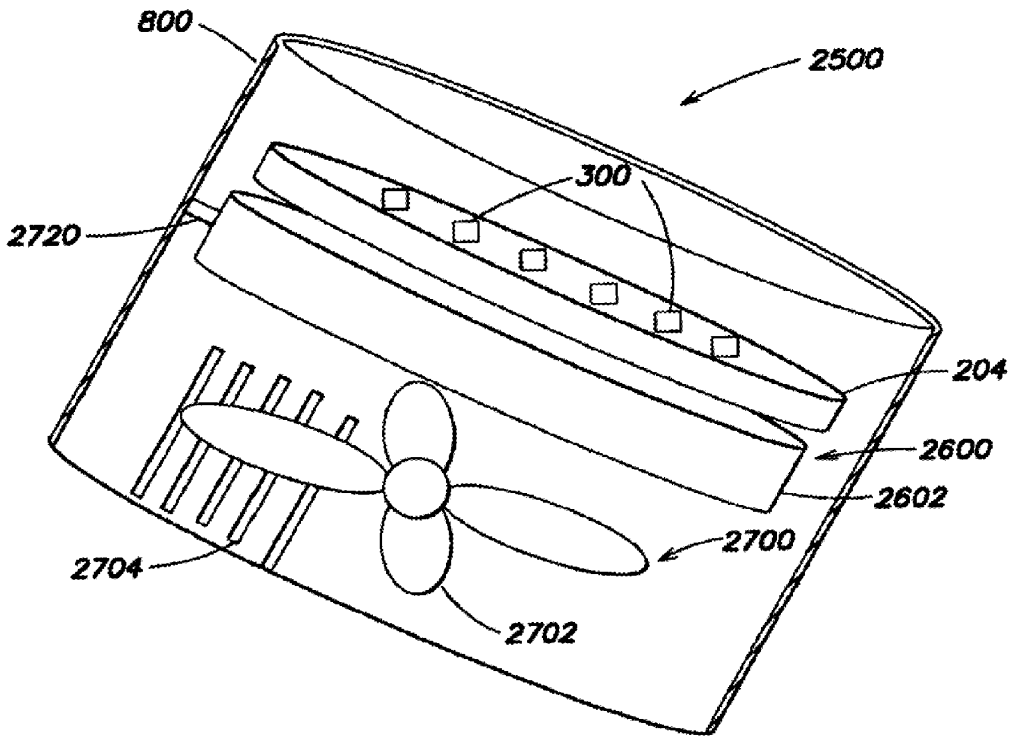

FIG. 19

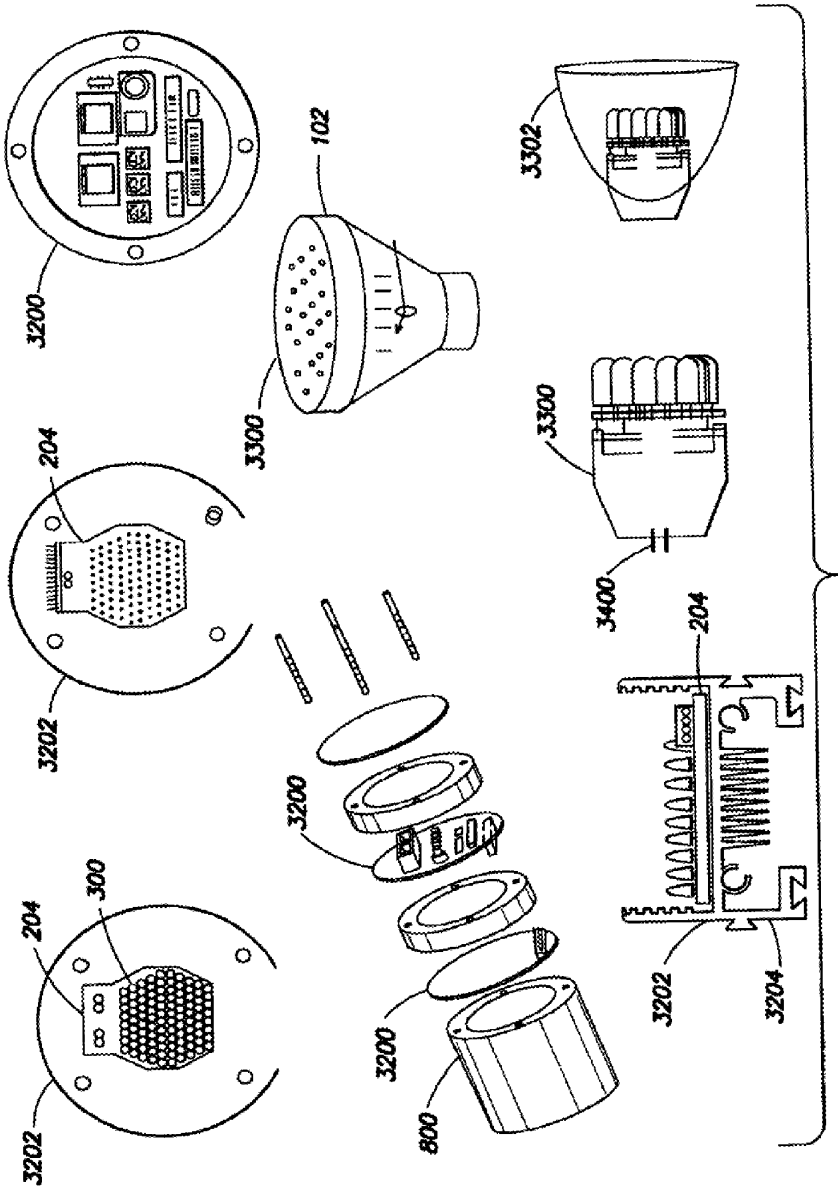
3200
102
3302
3300
3300
204
3400
3202
204
3200
300
204
3202
3200
3202
3204
800

FIG. 20

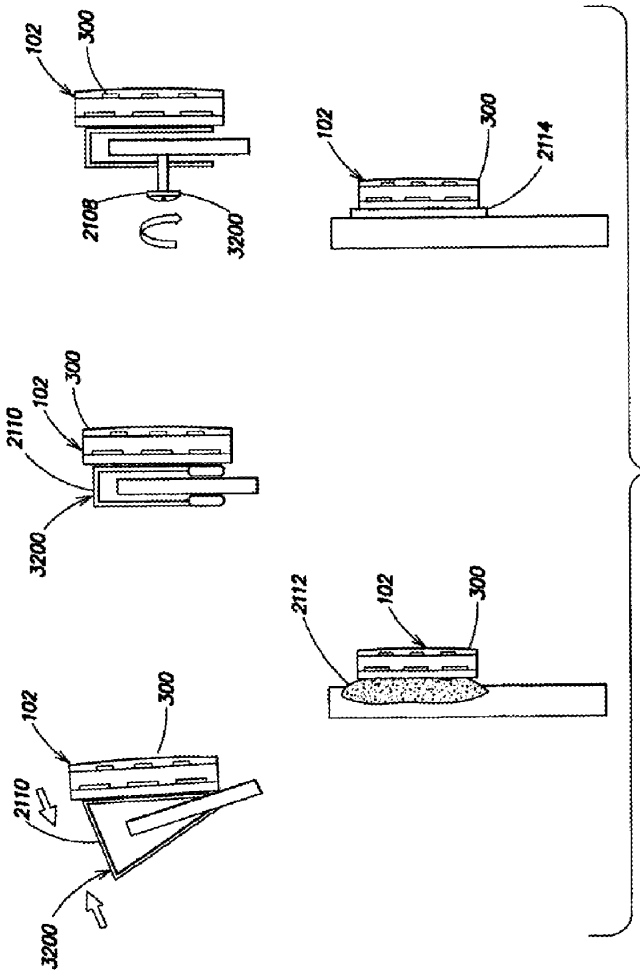
102
300
2108
3200
2110
102
300
3200
102
300
2110
3200
102
300
2114
2112
102
300

FIG. 21A

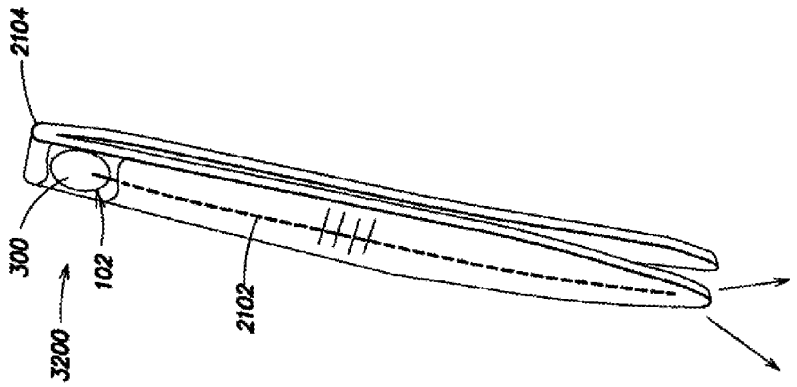

FIG. 21C

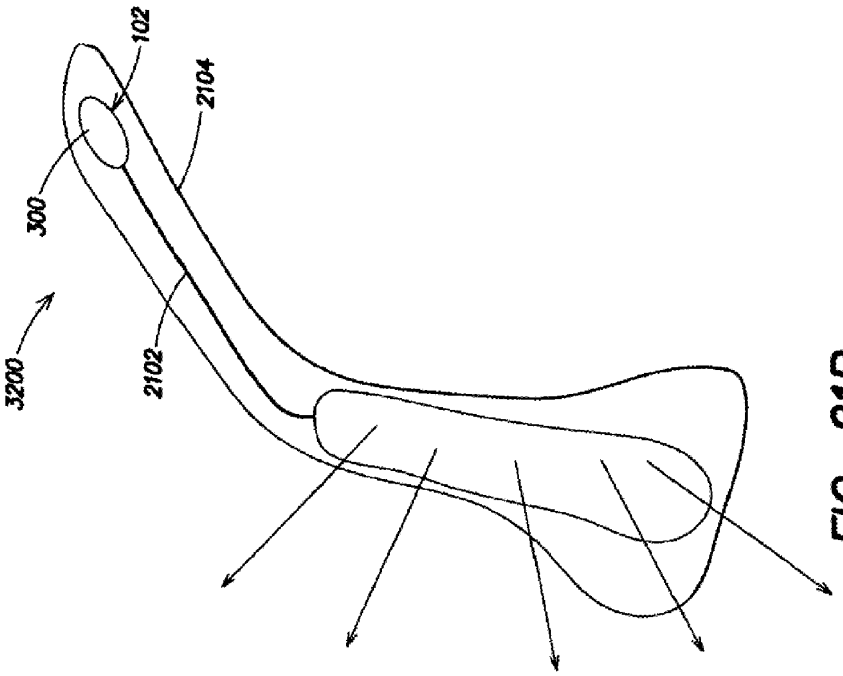

FIG. 21B

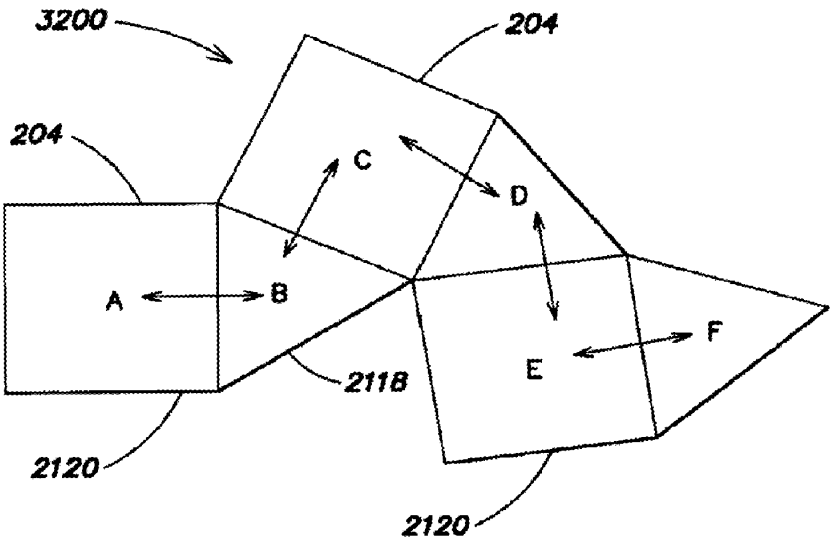

FIG. 21D

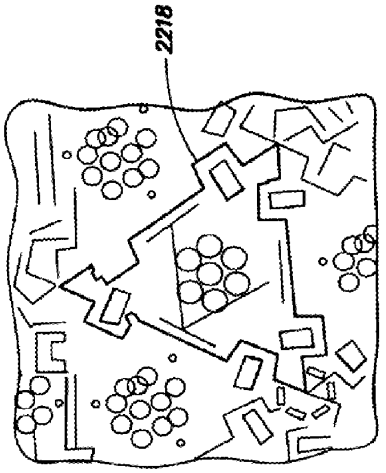

FIG. 22B

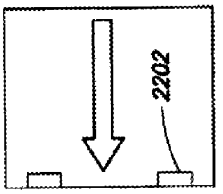

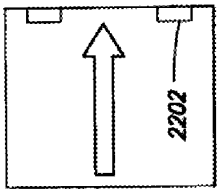

FIG. 22C

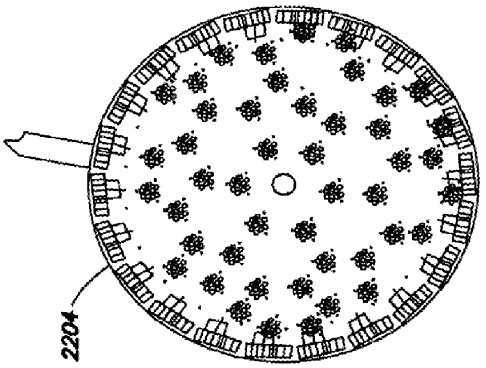

FIG. 22A

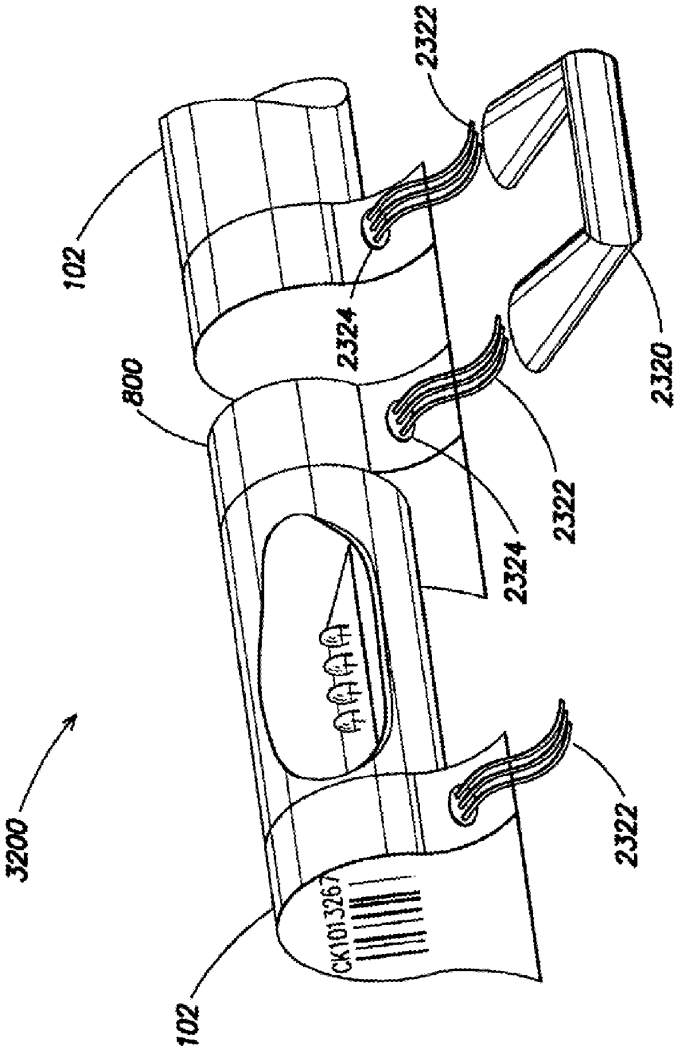

FIG. 23

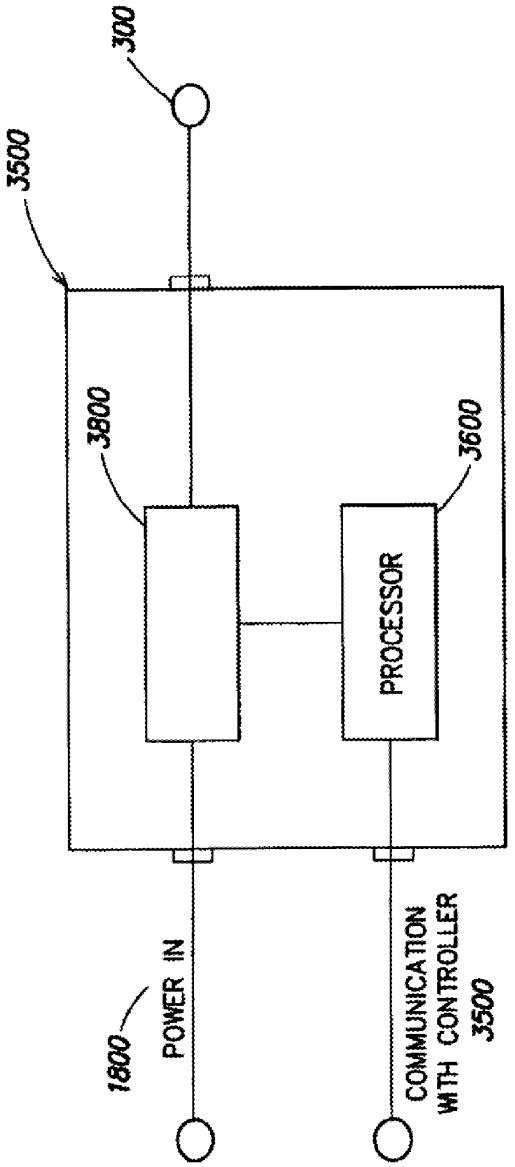
300
3500
3800
3600
PROCESSOR
1800
POWER IN
COMMUNICATION WITH CONTROLLER 3500

FIG. 24A

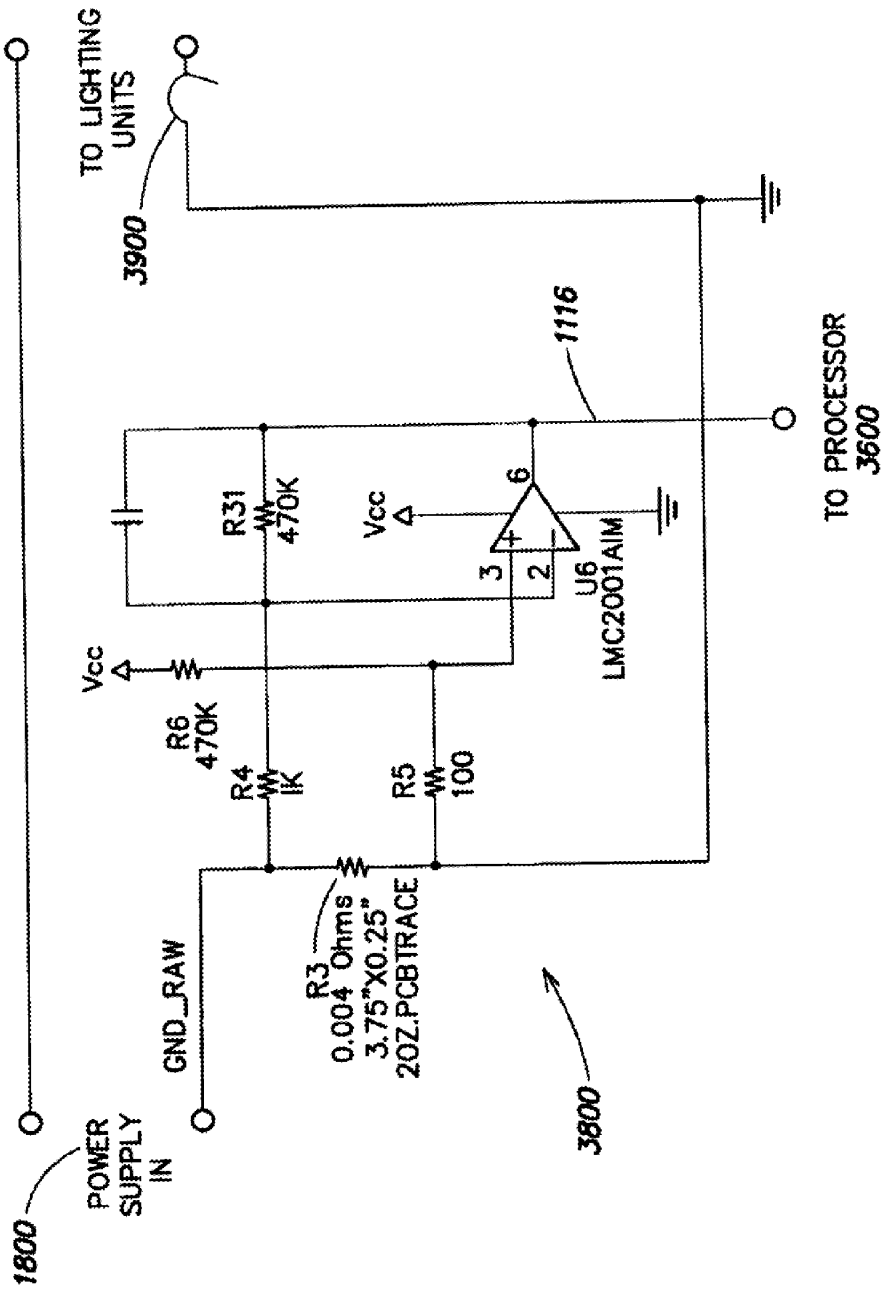
TO LIGHTING UNITS
3900
1116
TO PROCESSOR 3600
R31 470K
Vcc
6
3
2
U6 LMC2001AIM
Vcc
R6 470K
R4 1K
R5 100
R3 0.004 Ohms 3.75"X0.25" 2OZ.PCBTRACE
GND_RAW
3800
POWER SUPPLY IN
1800

FIG. 24B

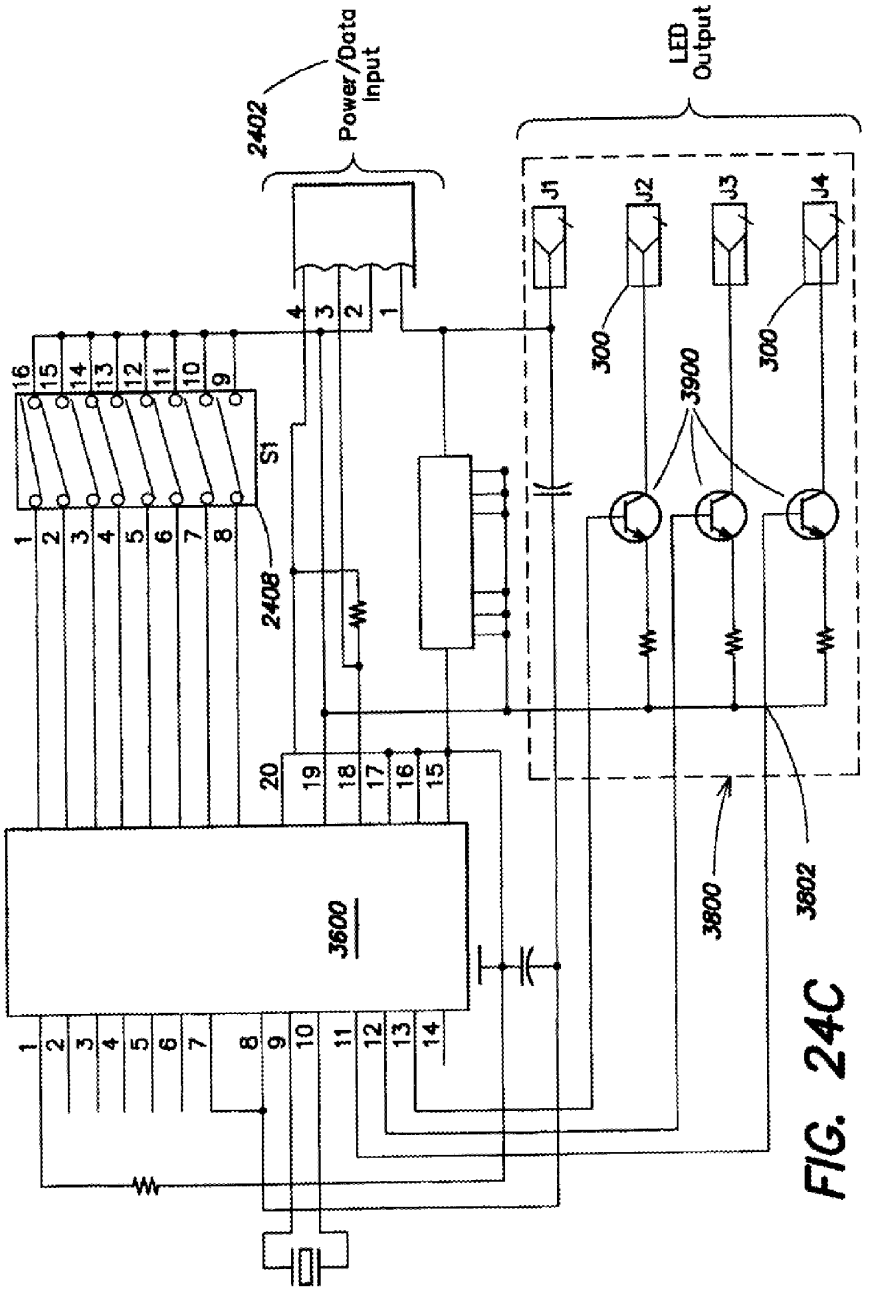
2402
Power/Data Input
LED Output
J1
J2
J3
J4
300
300
3900
S1
2408
3600
3800
3802

FIG. 24C

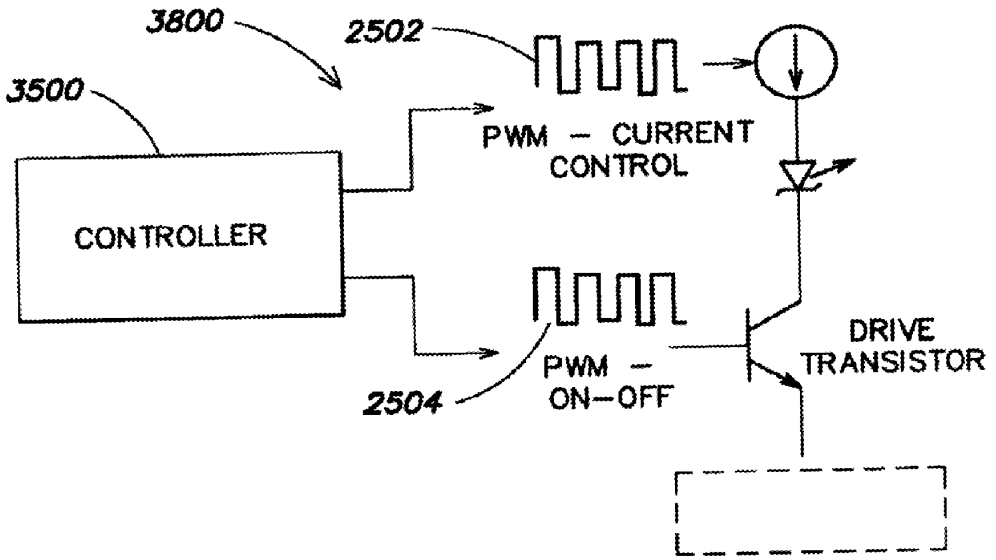
3800
2502
3500
PWM – CURRENT CONTROL
CONTROLLER
DRIVE TRANSISTOR
PWM – ON–OFF
2504

FIG. 25A

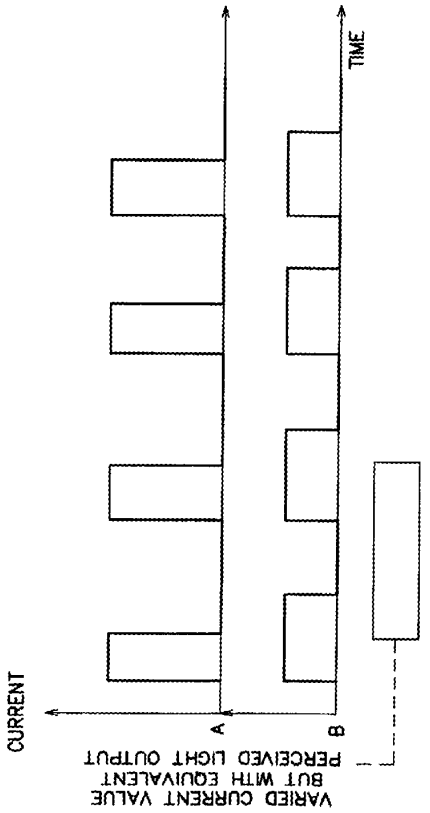
CURRENT
A
B
TIME
VARIED CURRENT VALUE
BUT WITH EQUIVALENT
PERCEIVED LIGHT OUTPUT

FIG. 25B

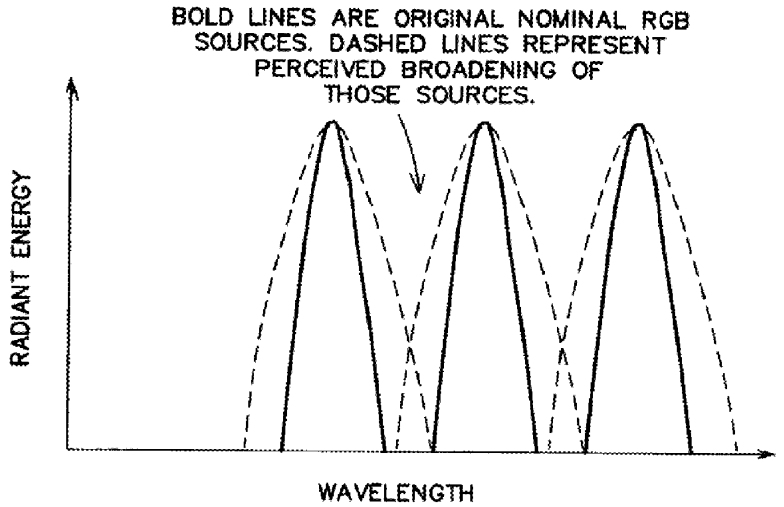

FIG. 25C

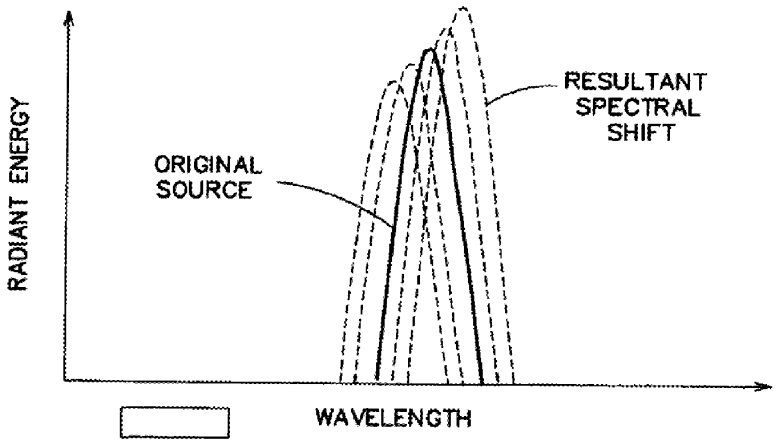

FIG. 25D

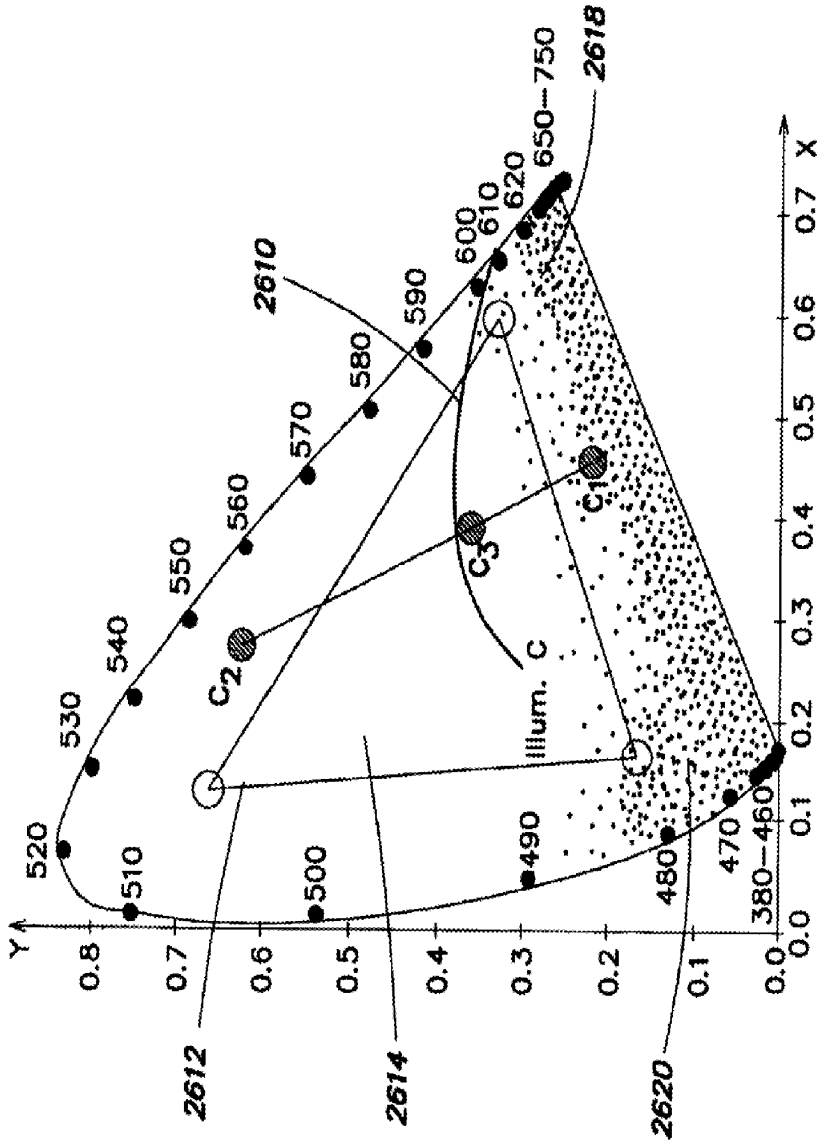
Y
X
0.0
0.1
0.2
0.3
0.4
0.5
0.6
0.7
0.8
520
530
540
550
560
570
580
590
600
610
620
650—750
510
500
490
480
470
380—460
2610
2612
2614
2618
2620
C1
C2
C3
Illum. C

FIG. 26

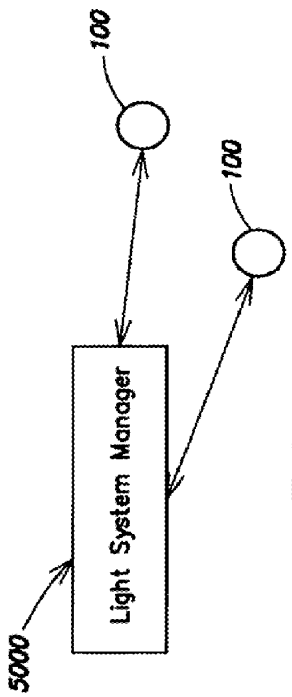

FIG. 27A

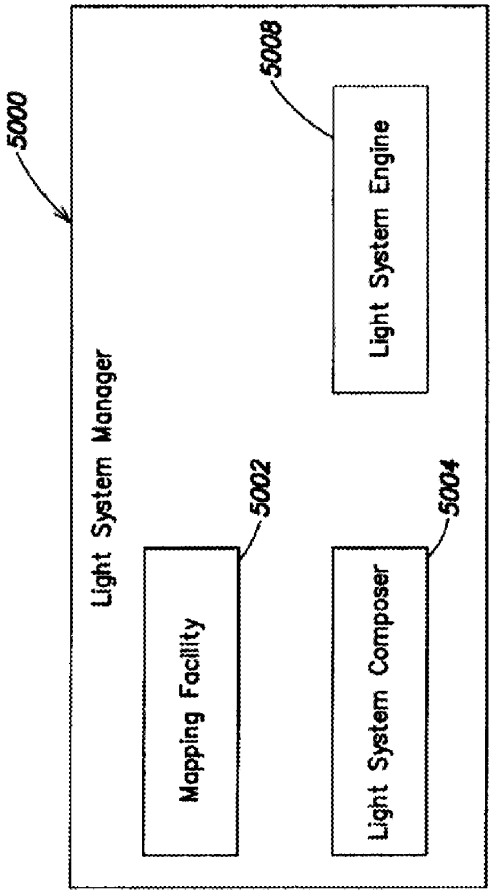

FIG. 27B

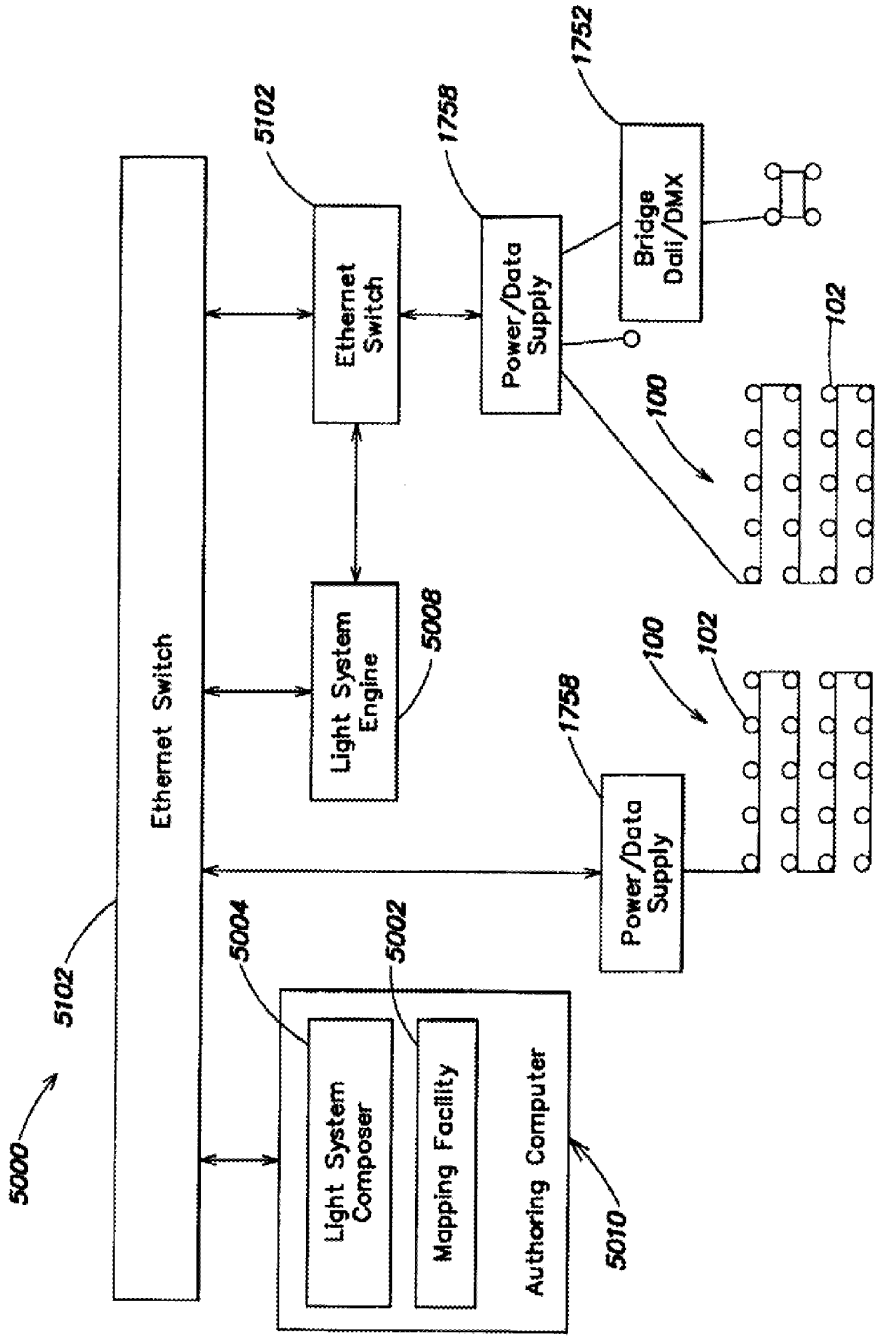
5000
5102
Ethernet Switch
5102
Ethernet Switch
1758
Power/Data Supply
1752
Bridge Dali/DMX
100
102
Light System Engine
5008
1758
Power/Data Supply
100
102
5004
Light System Composer
5002
Mapping Facility
Authoring Computer
5010

FIG. 28

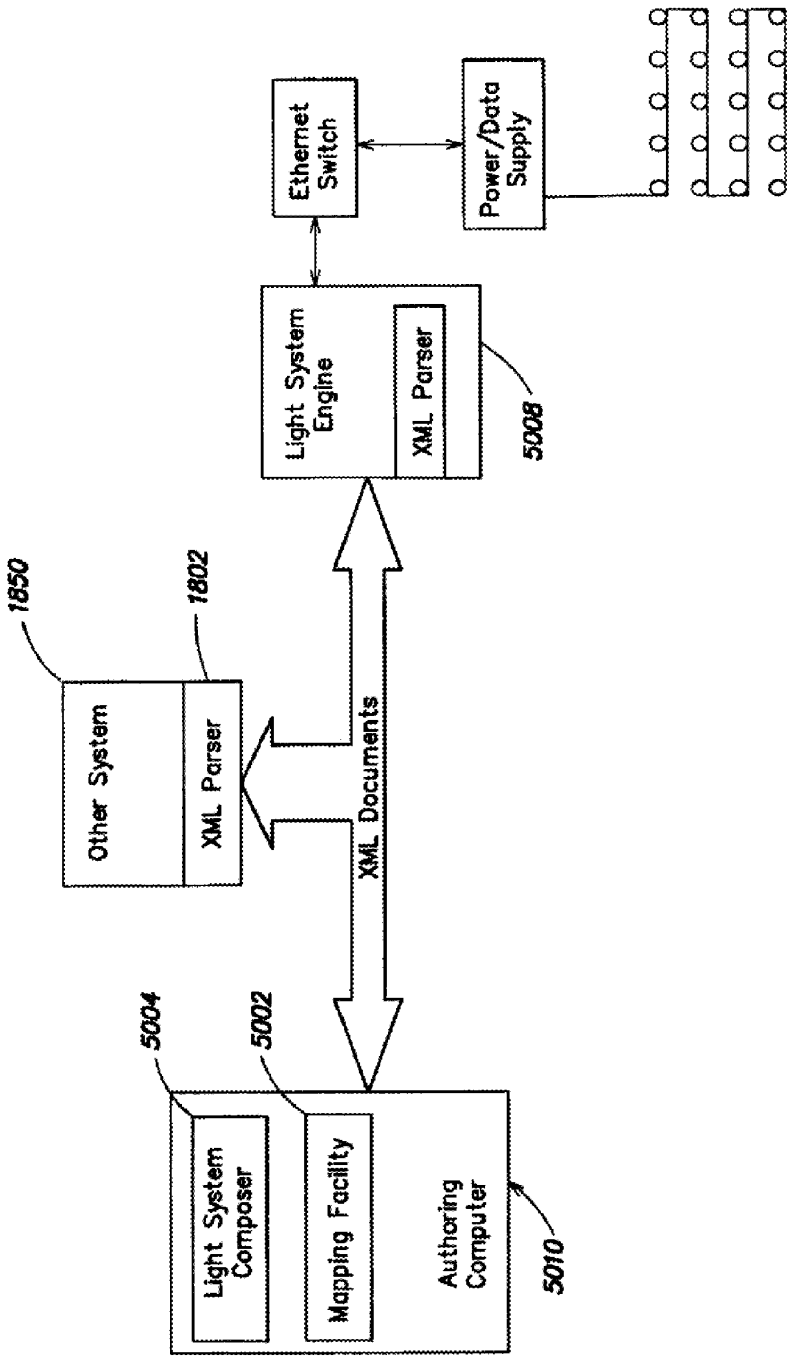
Ethernet Switch
Power/Data Supply
Light System Engine
XML Parser
5008
1850
1802
Other System
XML Parser
XML Documents
5004
5002
Light System Composer
Mapping Facility
Authoring Computer
5010

FIG. 29

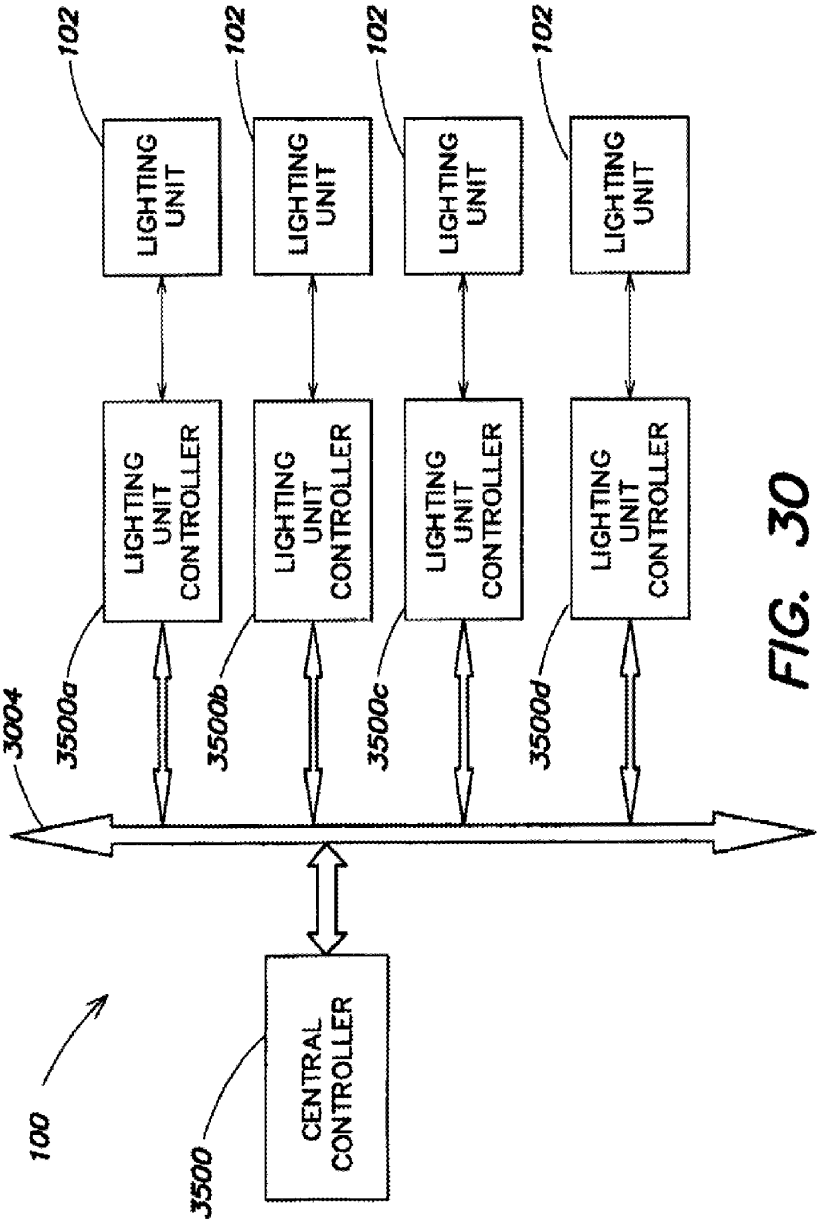
100
3500
CENTRAL CONTROLLER
3004
3500a
3500b
3500c
3500d
LIGHTING UNIT CONTROLLER
LIGHTING UNIT CONTROLLER
LIGHTING UNIT CONTROLLER
LIGHTING UNIT CONTROLLER
102
102
102
102
LIGHTING UNIT
LIGHTING UNIT
LIGHTING UNIT
LIGHTING UNIT

FIG. 30

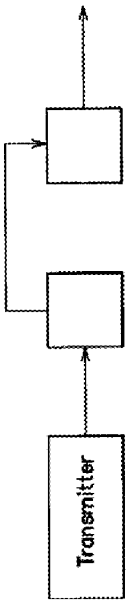

FIG. 31A

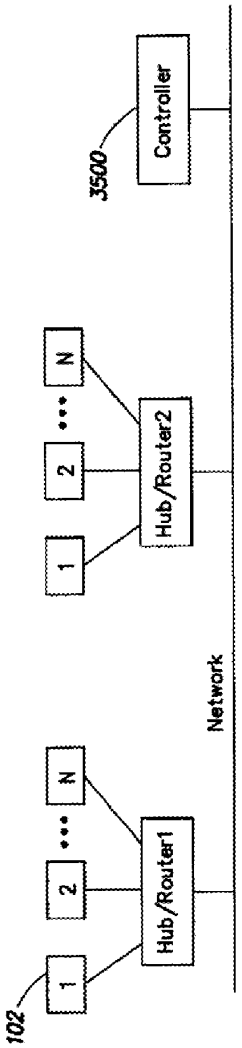

FIG. 31B

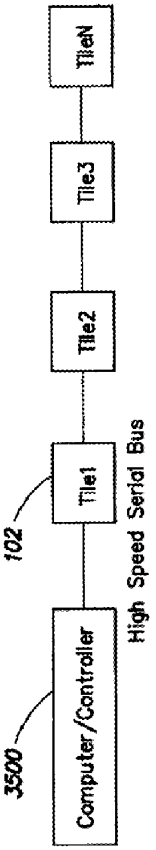

FIG. 31C

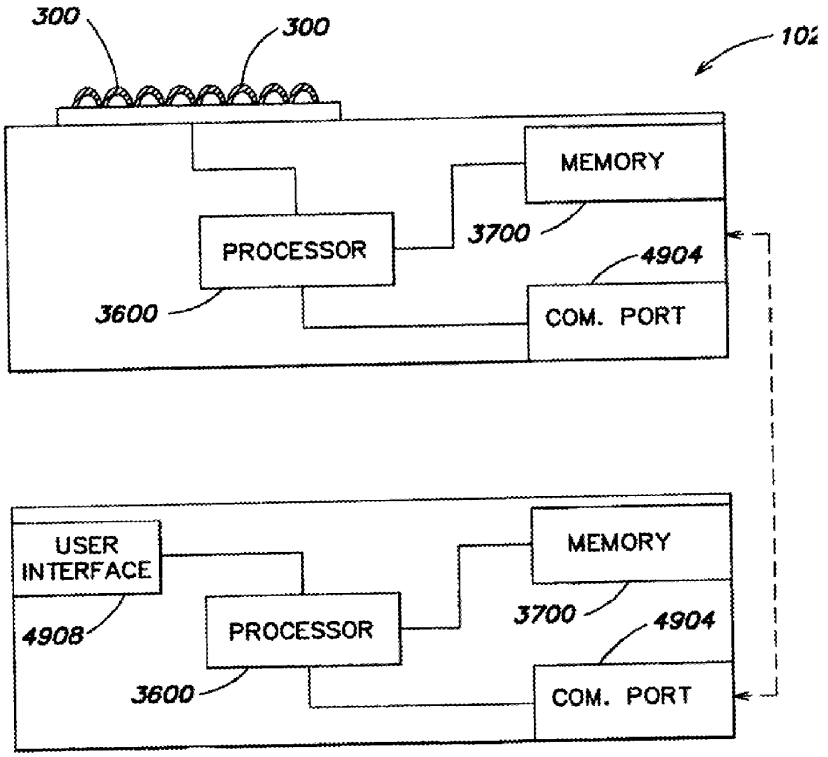
300
300
102
MEMORY
PROCESSOR
3700
4904
3600
COM. PORT
USER INTERFACE
MEMORY
4908
PROCESSOR
3700
4904
3600
COM. PORT

FIG. 32

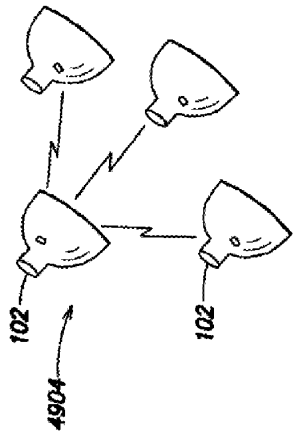

FIG. 33B

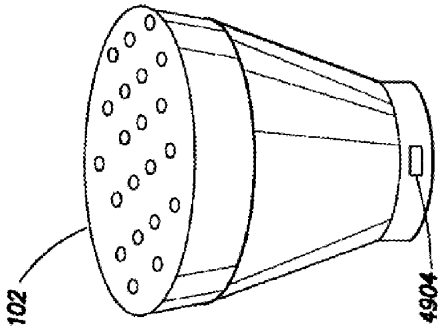

FIG. 33C

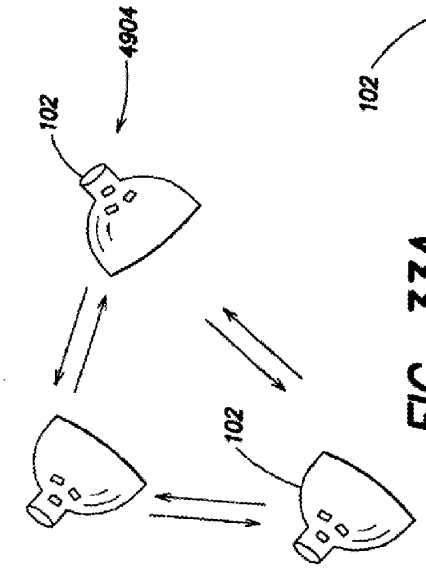

FIG. 33A

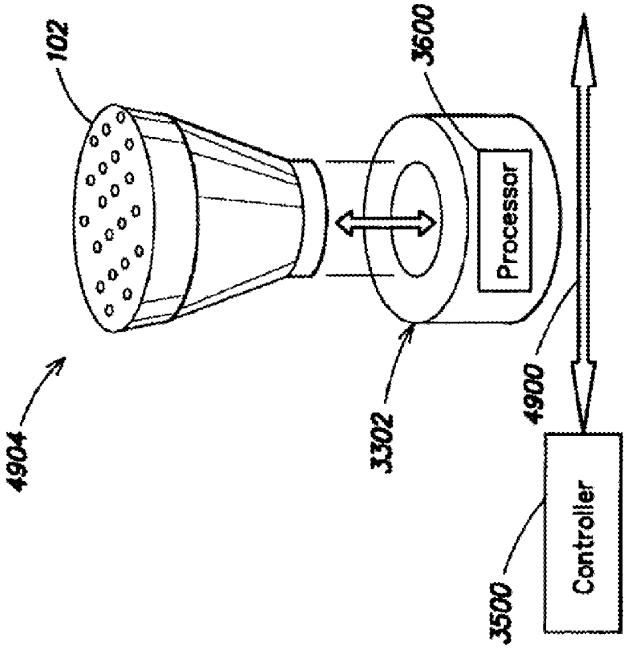

FIG. 33E

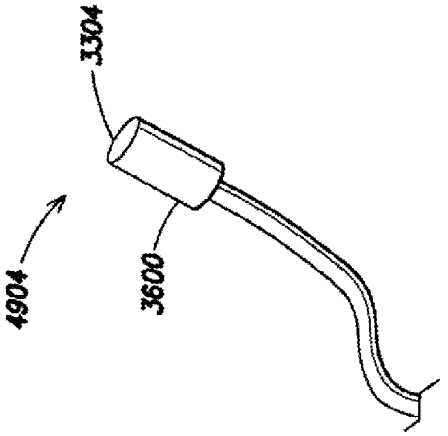

FIG. 33D

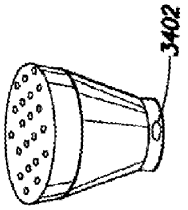

FIG. 34A

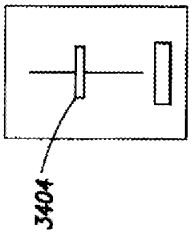

FIG. 34B

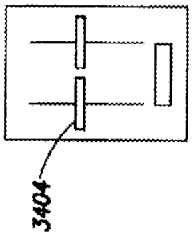

FIG. 34C

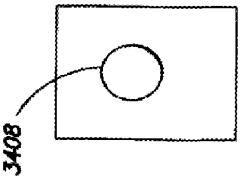

FIG. 34D

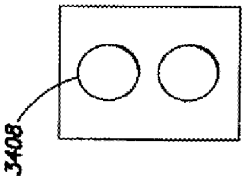

FIG. 34E

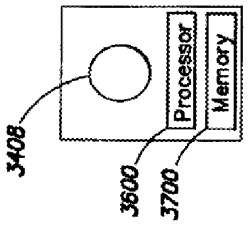

FIG. 34F

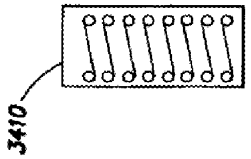

FIG. 34G

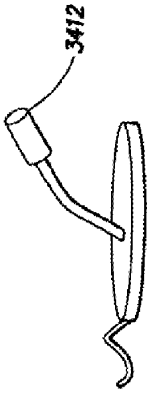

FIG. 34H

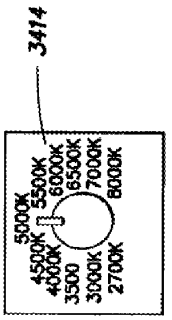

FIG. 34I

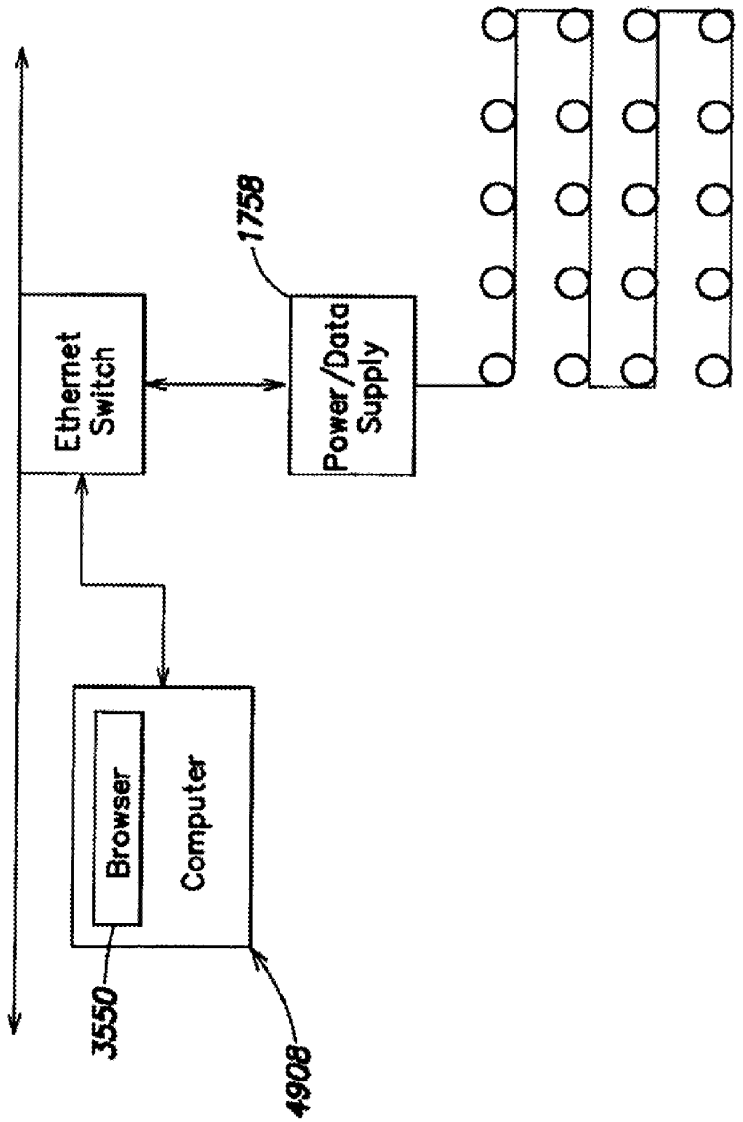
Ethernet Switch
1758
Power /Data Supply
Browser
Computer
3550
4908

FIG. 35A

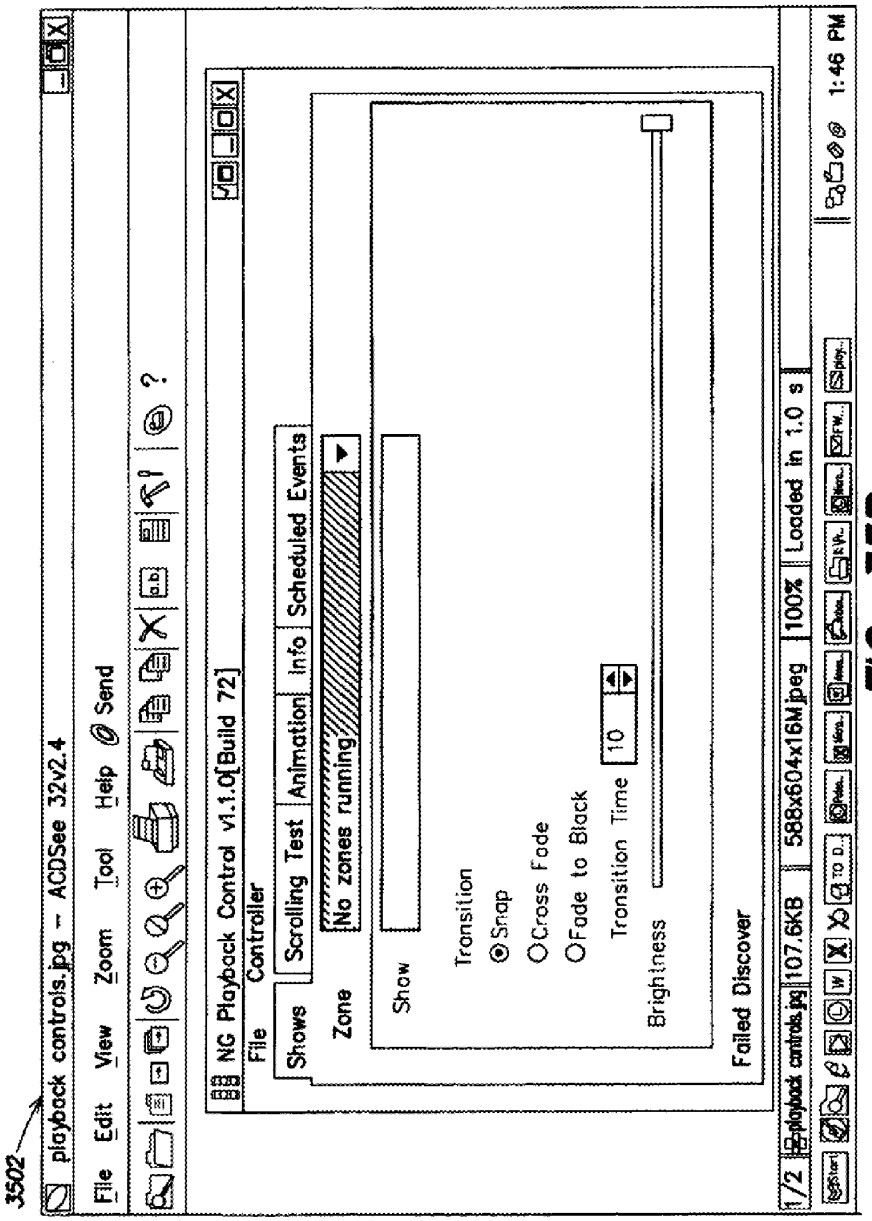
3502
playback controls.jpg - ACDSee 32v2.4
File Edit View Zoom Tool Help Send
NG Playback Control v1.1.0[Build 72]
File Controller
Shows
Scrolling Test
Animation
Info
Scheduled Events
Zone
No zones running
Show
Transition
Snap
Cross Fade
Fade to Black
Transition Time
10
Brightness
Failed Discover
1/2
playback controls.jpg
107.6KB
588x604x16M jpeg
100%
Loaded in 1.0 s
1:46 PM

FIG. 35B

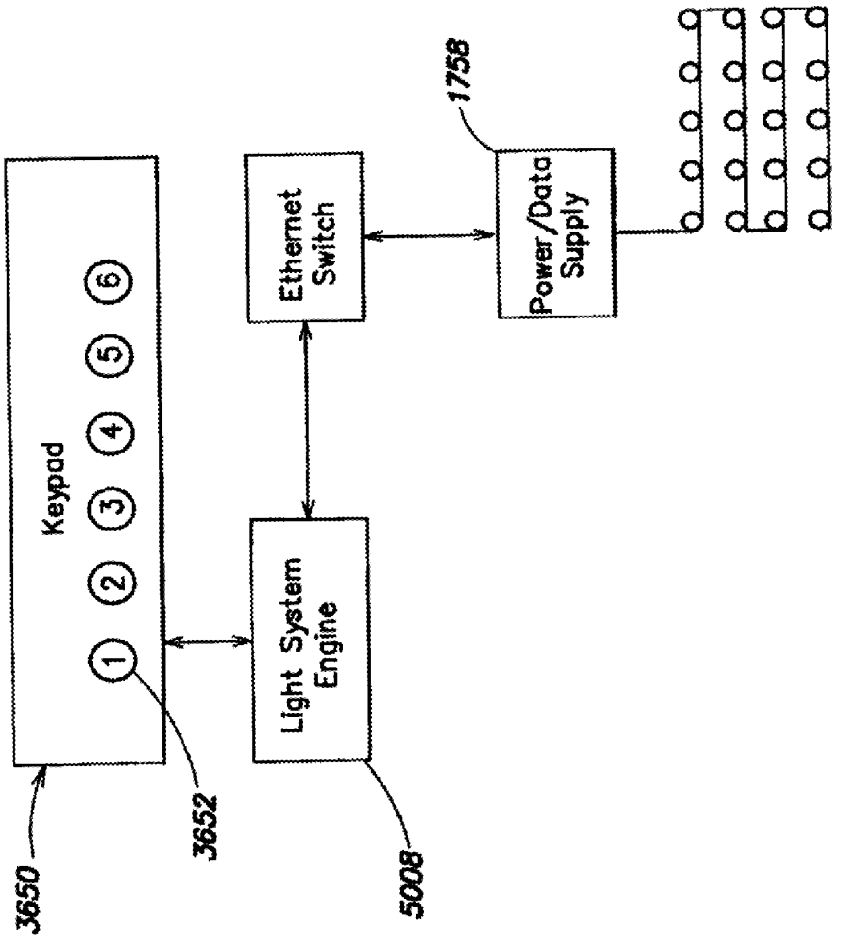
Keypad
1
2
3
4
5
6
3650
3652
Light System Engine
5008
Ethernet Switch
1758
Power/Data Supply

FIG. 36

3700

3702 LIGHT SYSTEM	3704 TIME	3708 POSITION	3710 LIT POSITION	3712 COLOR RANGE	3714 INTENSITY	3718 OTHER SYS.	3720 POSITION
LS001	T1	(1,3,7)	POLY001	0–16000	0–100		
LS001	T2	(1,3,7)	POLY001	0–16000			
LS001	T3	(1,3,7)	POLY002	0–16000			
LS002	T1	(0,0,0)	POLY003	0–16000			
LS002	T2	(0,0,0)	POLY004	0–16000			
LS002	T3	(0,0,0)	POLY005	0–16000			
LS00N	TN						

FIG. 37

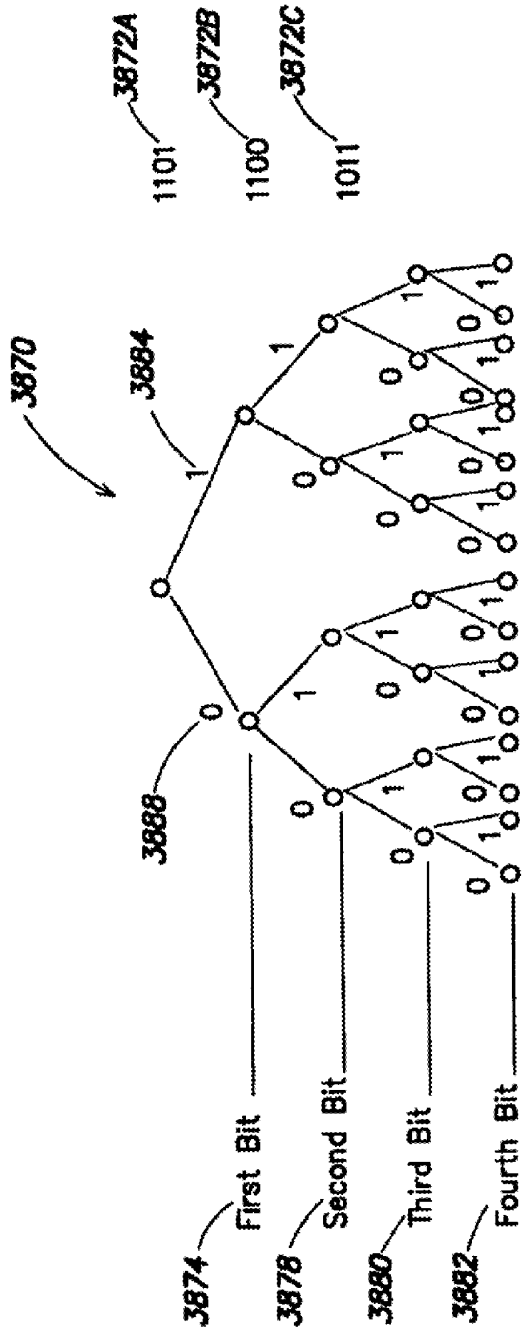
3872A
1101
3872B
1100
3872C
1011
3870
3884
3888
First Bit
Second Bit
Third Bit
Fourth Bit
3874
3878
3880
3882

FIG. 38

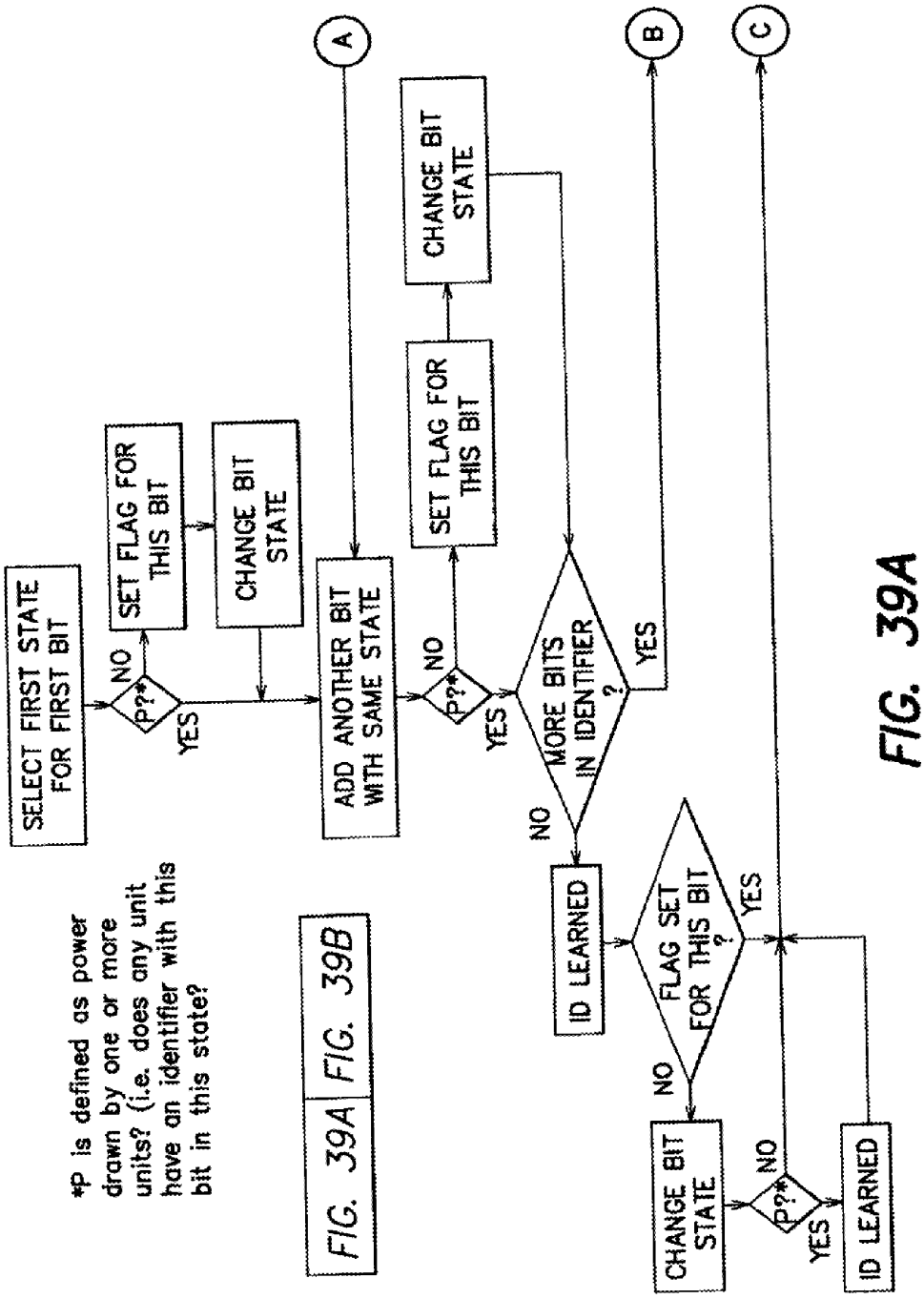
SELECT FIRST STATE FOR FIRST BIT
P??*
NO
YES
SET FLAG FOR THIS BIT
CHANGE BIT STATE
ADD ANOTHER BIT WITH SAME STATE
A
P??*
NO
YES
SET FLAG FOR THIS BIT
CHANGE BIT STATE
MORE BITS IN IDENTIFIER ?
NO
YES
B
C
ID LEARNED
FLAG SET FOR THIS BIT ?
NO
YES
CHANGE BIT STATE
P??*
NO
YES
ID LEARNED
*P is defined as power drawn by one or more units? (i.e. does any unit have an identifier with this bit in this state?
FIG. 39A
FIG. 39B

FIG. 39A

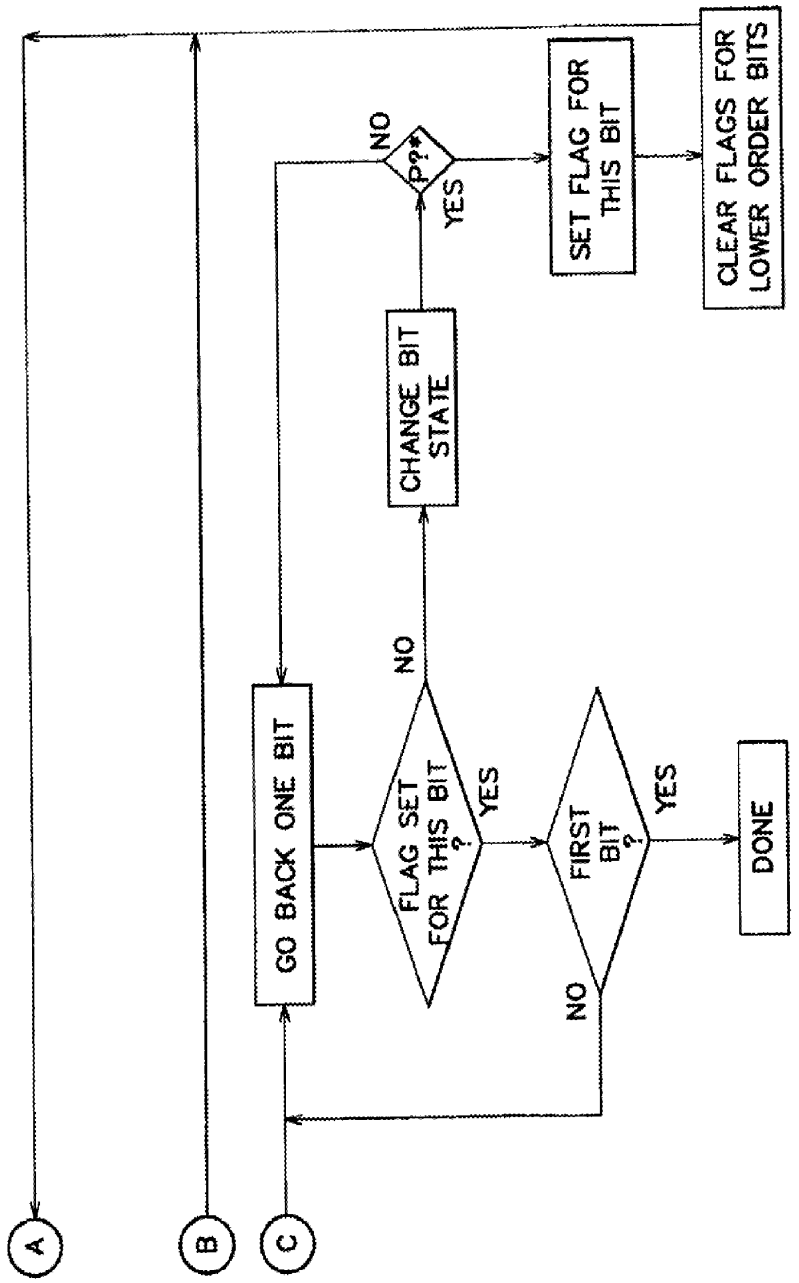
A
B
C
GO BACK ONE BIT
FLAG SET FOR THIS BIT ?
NO
YES
CHANGE BIT STATE
P??*
NO
YES
SET FLAG FOR THIS BIT
CLEAR FLAGS FOR LOWER ORDER BITS
FIRST BIT ?
NO
YES
DONE

FIG. 39B

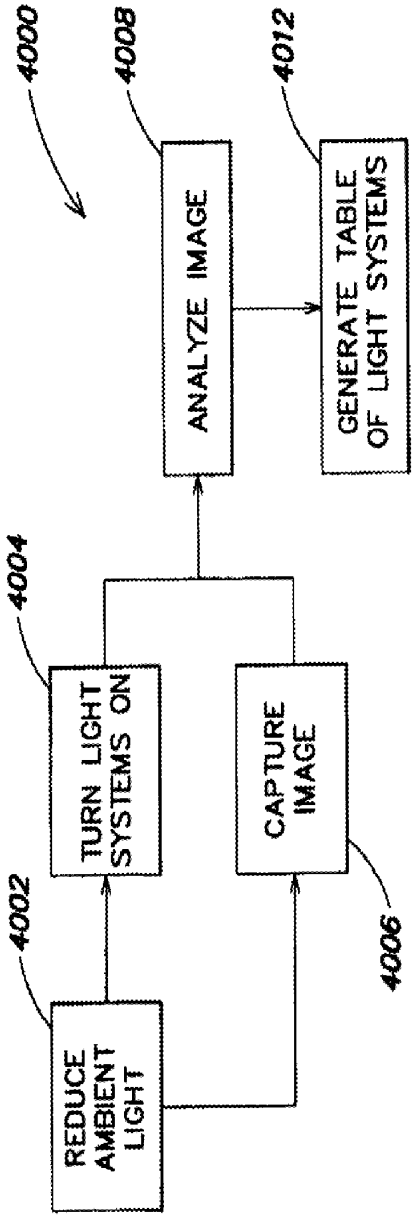
4000
4002
REDUCE AMBIENT LIGHT
4004
TURN LIGHT SYSTEMS ON
4006
CAPTURE IMAGE
4008
ANALYZE IMAGE
4012
GENERATE TABLE OF LIGHT SYSTEMS

FIG. 40

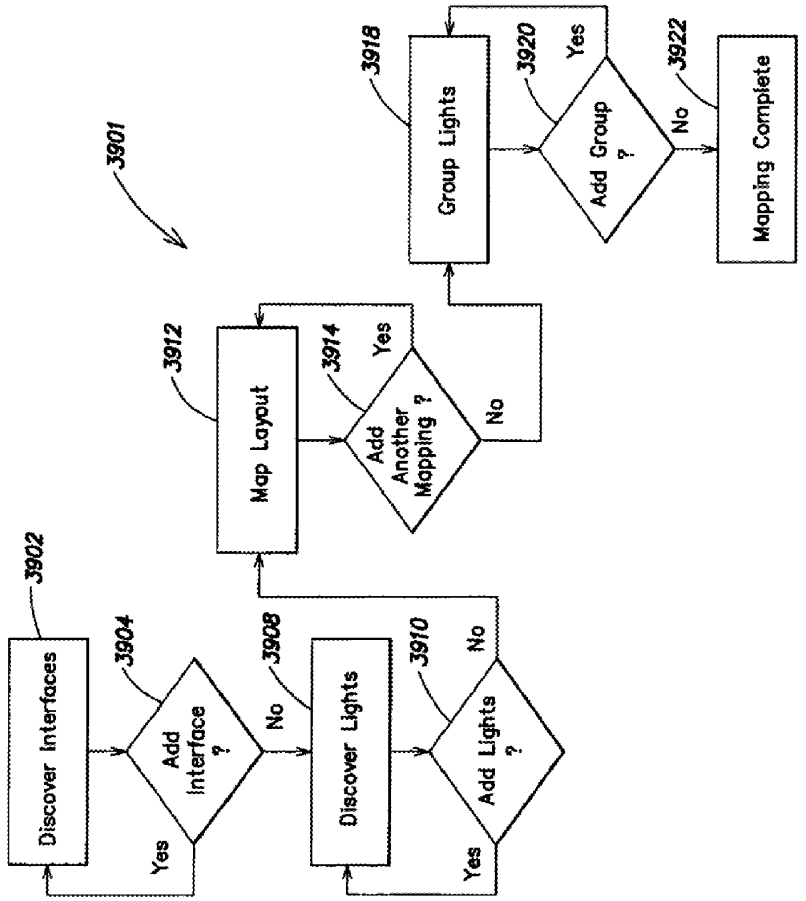
3901
3902
Discover Interfaces
3904
Add Interface ?
Yes
No
3908
Discover Lights
3910
Add Lights ?
Yes
No
3912
Map Layout
3914
Add Another Mapping ?
Yes
No
3918
Group Lights
3920
Add Group ?
Yes
No
3922
Mapping Complete

FIG. 41

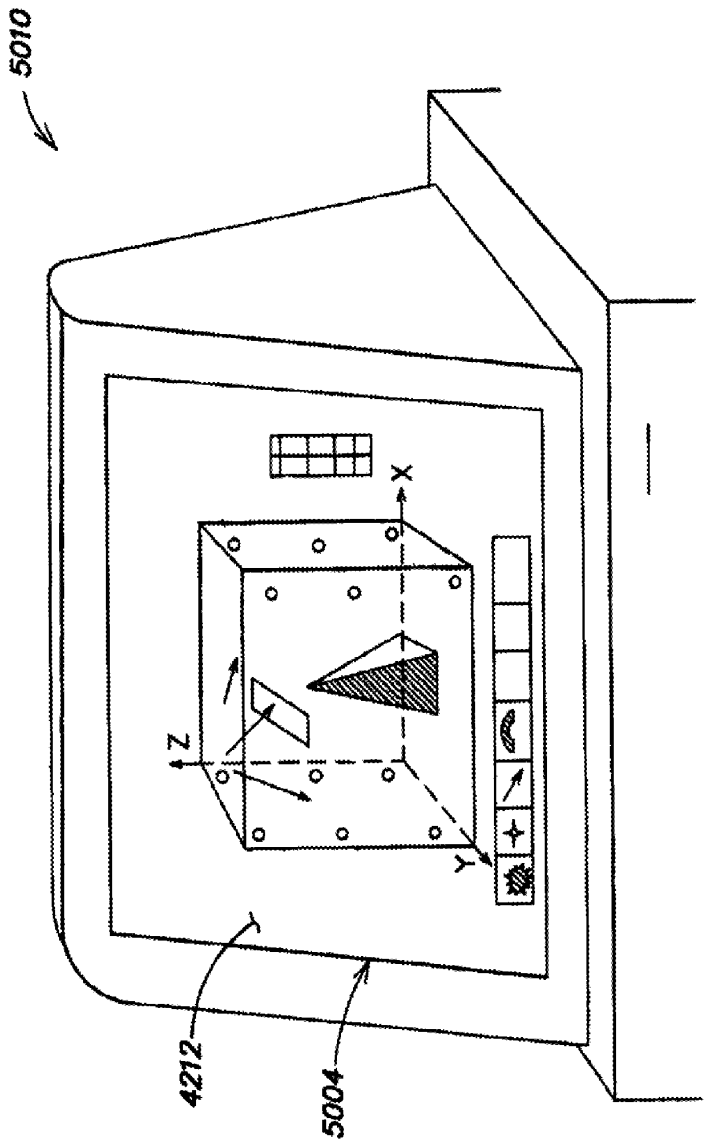

FIG. 42

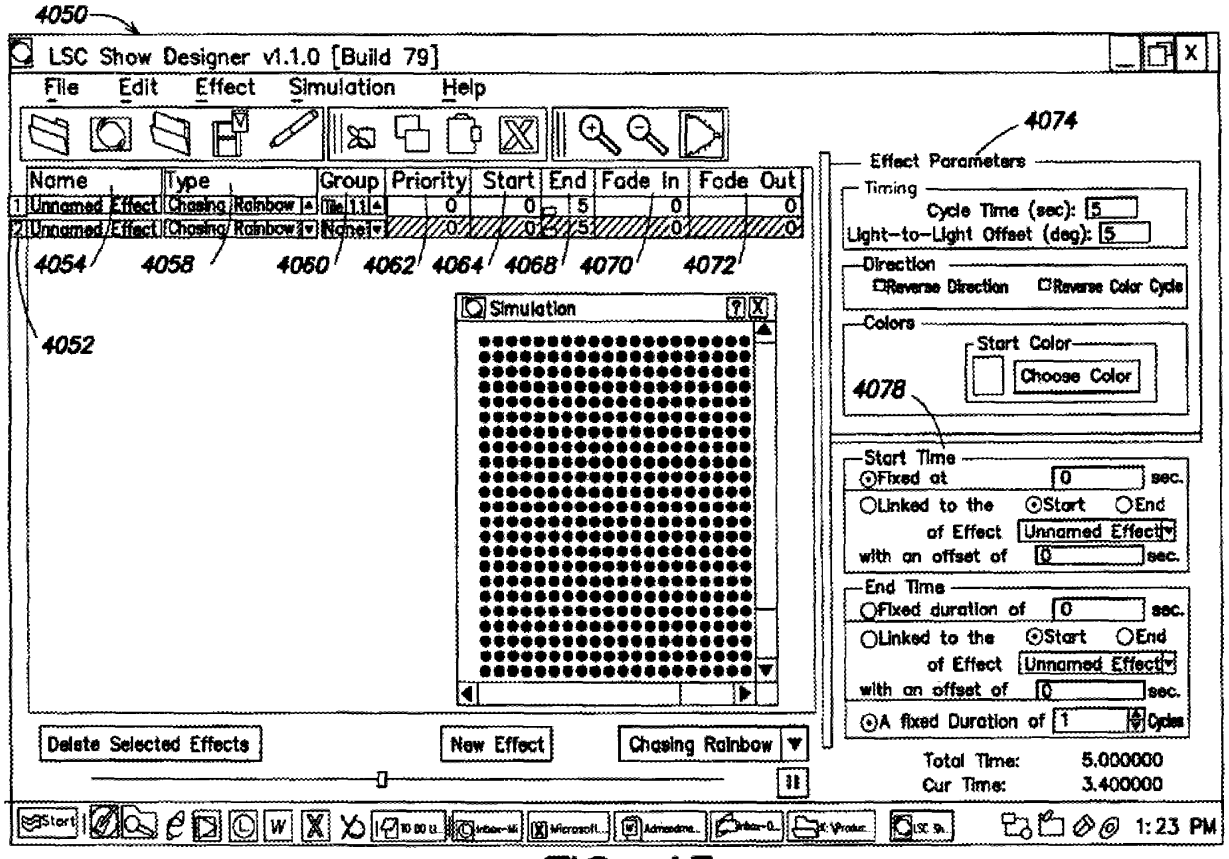
4050
LSC Show Designer v1.1.0 [Build 79]
File
Edit
Effect
Simulation
Help
Name
Type
Group
Priority
Start
End
Fade In
Fade Out
Unnamed Effect
Chasing Rainbow
Tile 1.1
None
4054
4058
4060
4062
4064
4068
4070
4072
4052
Simulation
4074
Effect Parameters
Timing
Cycle Time (sec): 5
Light-to-Light Offset (deg): 5
Direction
Reverse Direction
Reverse Color Cycle
Colors
Start Color
Choose Color
4078
Start Time
Fixed at 0 sec.
Linked to the Start End
of Effect Unnamed Effect
with an offset of 0 sec.
End Time
Fixed duration of 0 sec.
Linked to the Start End
of Effect Unnamed Effect
with an offset of 0 sec.
A fixed Duration of 1 Cycles
Delete Selected Effects
New Effect
Chasing Rainbow
Total Time: 5.000000
Cur Time: 3.400000
1:23 PM

FIG. 43

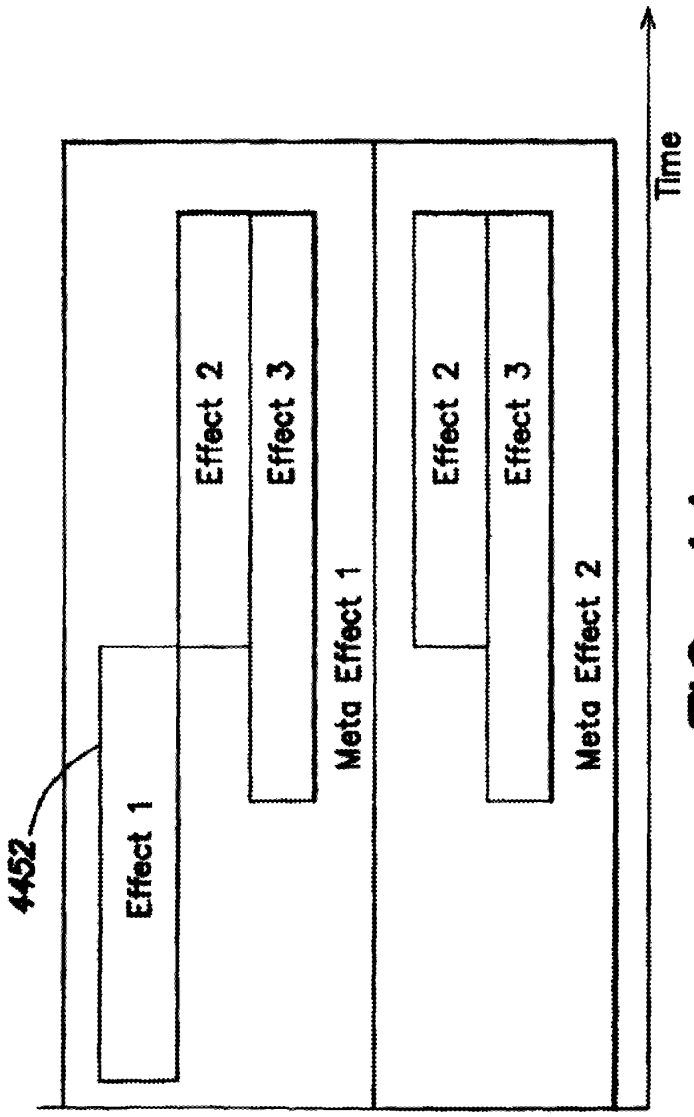
4452
Effect 1
Effect 2
Effect 3
Meta Effect 1
Effect 2
Effect 3
Meta Effect 2
Time

FIG. 44

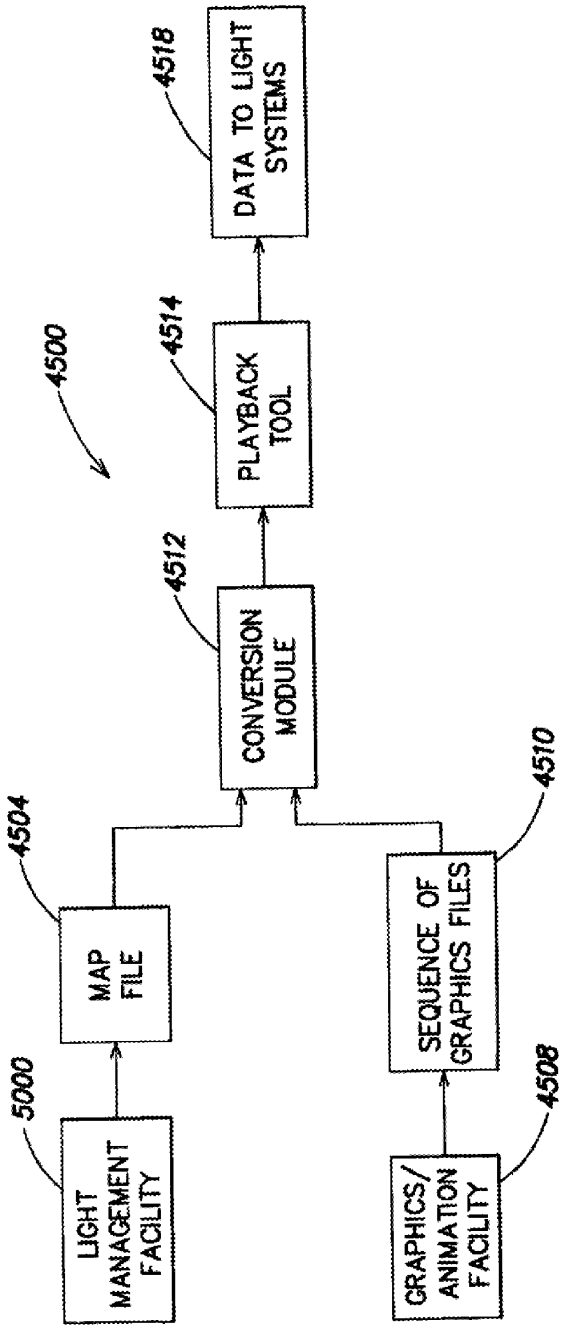
4500
5000
LIGHT MANAGEMENT FACILITY
4504
MAP FILE
4508
GRAPHICS/ ANIMATION FACILITY
4510
SEQUENCE OF GRAPHICS FILES
4512
CONVERSION MODULE
4514
PLAYBACK TOOL
4518
DATA TO LIGHT SYSTEMS

FIG. 45

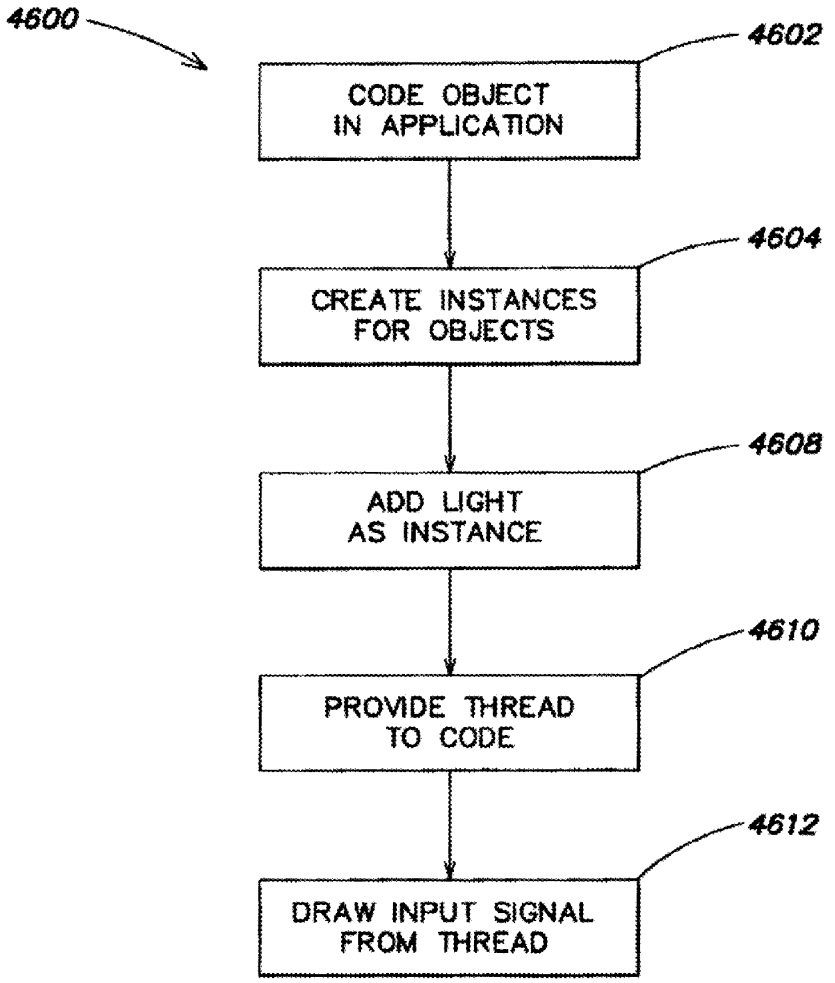
4600
4602
CODE OBJECT IN APPLICATION
4604
CREATE INSTANCES FOR OBJECTS
4608
ADD LIGHT AS INSTANCE
4610
PROVIDE THREAD TO CODE
4612
DRAW INPUT SIGNAL FROM THREAD

FIG. 46

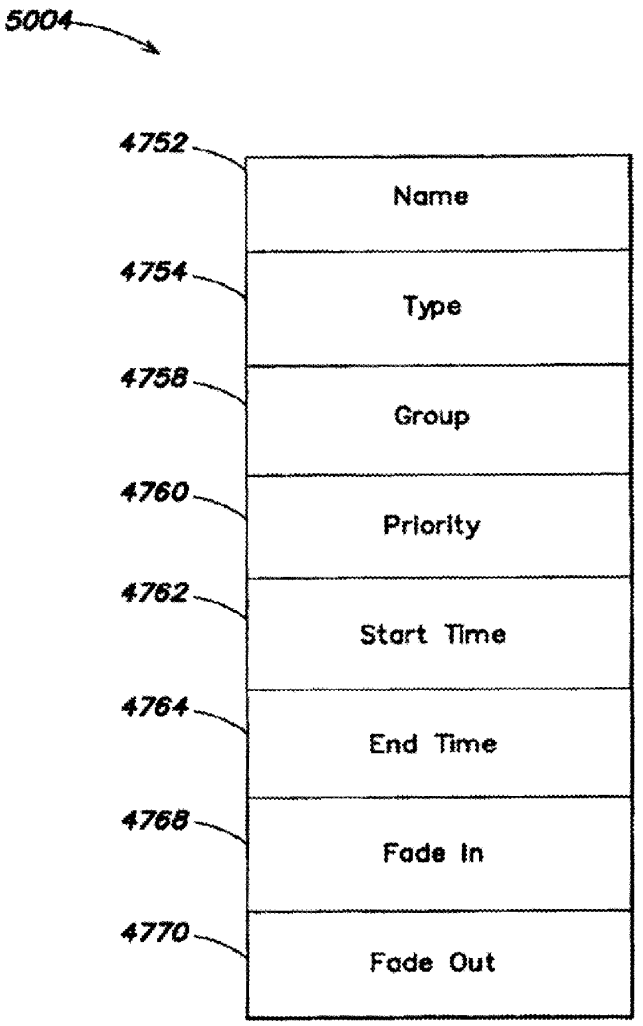
5004
4752
Name
4754
Type
4758
Group
4760
Priority
4762
Start Time
4764
End Time
4768
Fade In
4770
Fade Out

FIG. 47

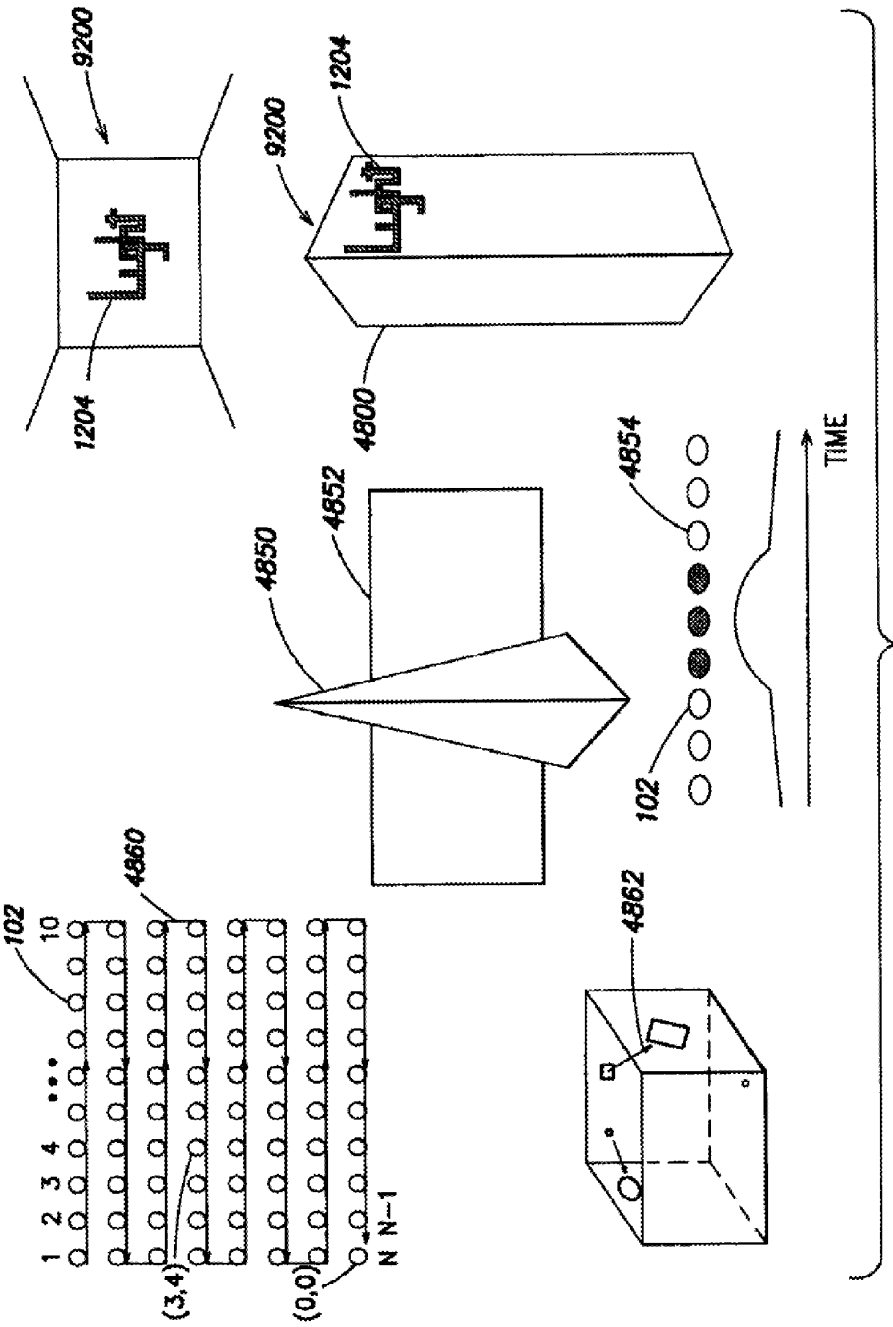
9200
1204
9200
1204
4800
4850
4852
4854
102
TIME
4860
102
10
1 2 3 4 ...
(3,4)
(0,0)
N N-1
4862

FIG. 48

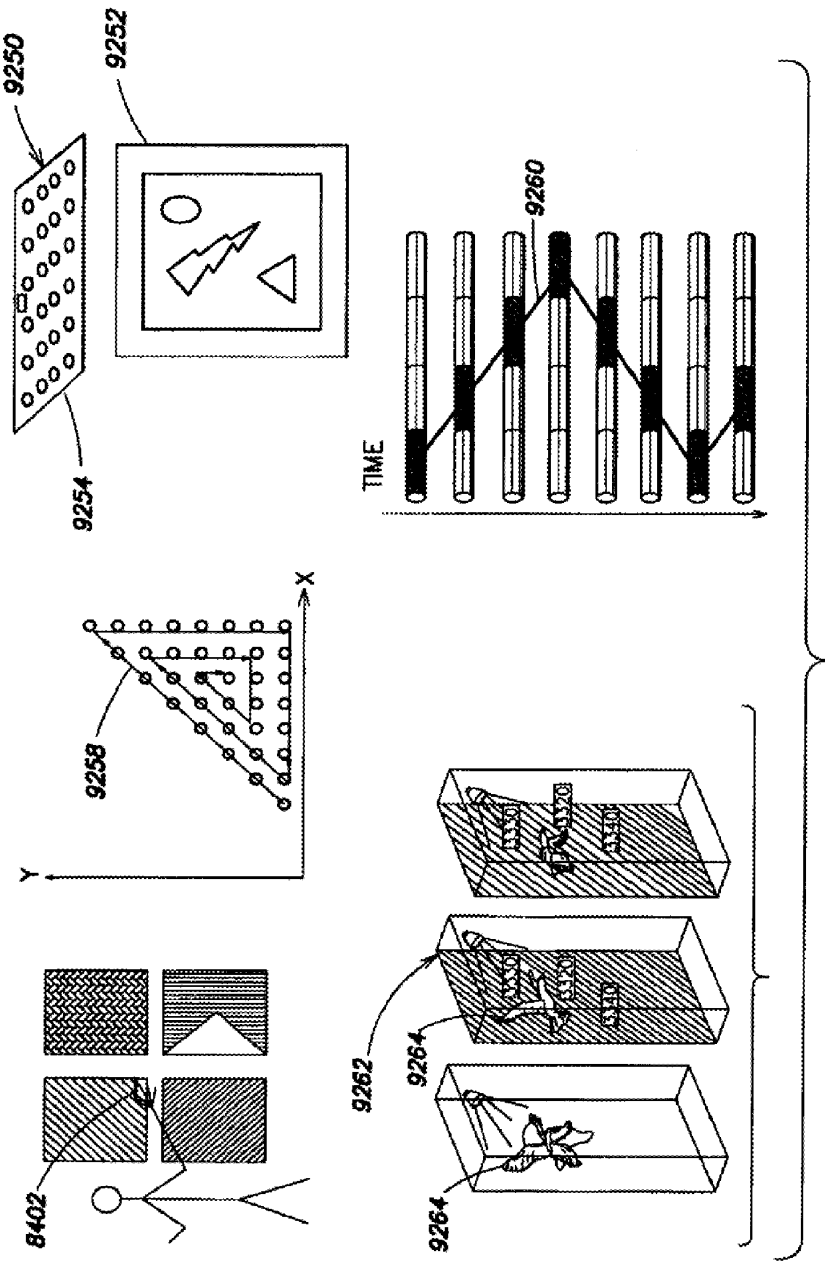

FIG. 49

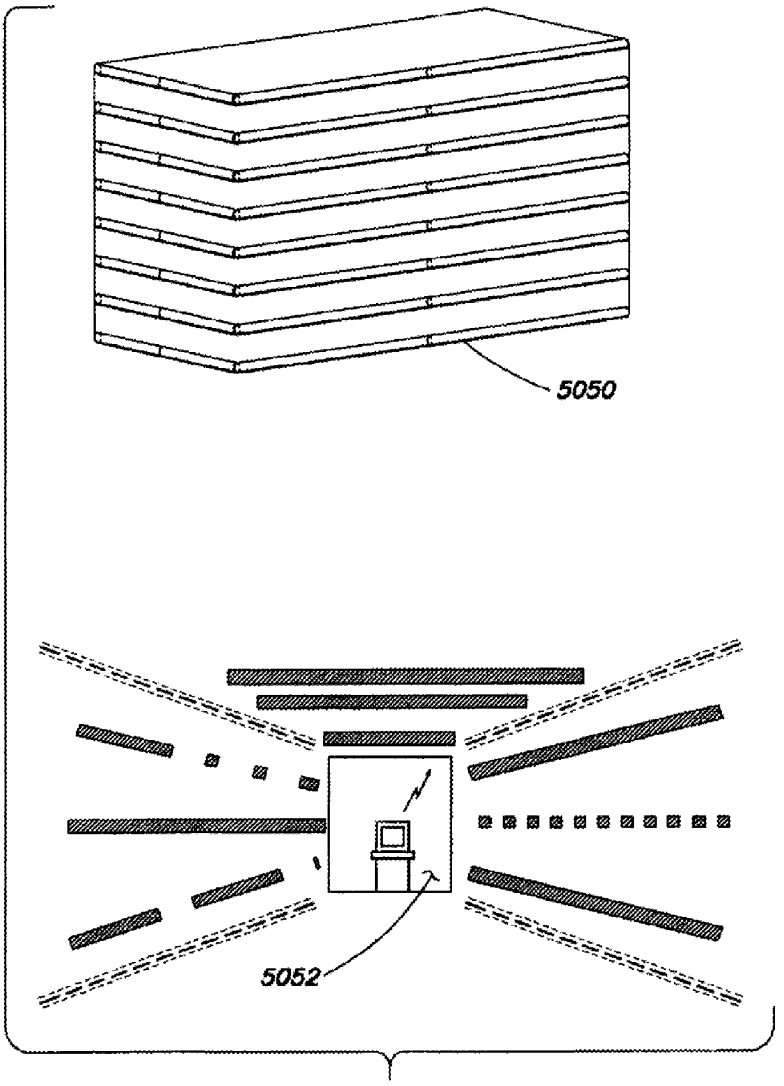

FIG. 50

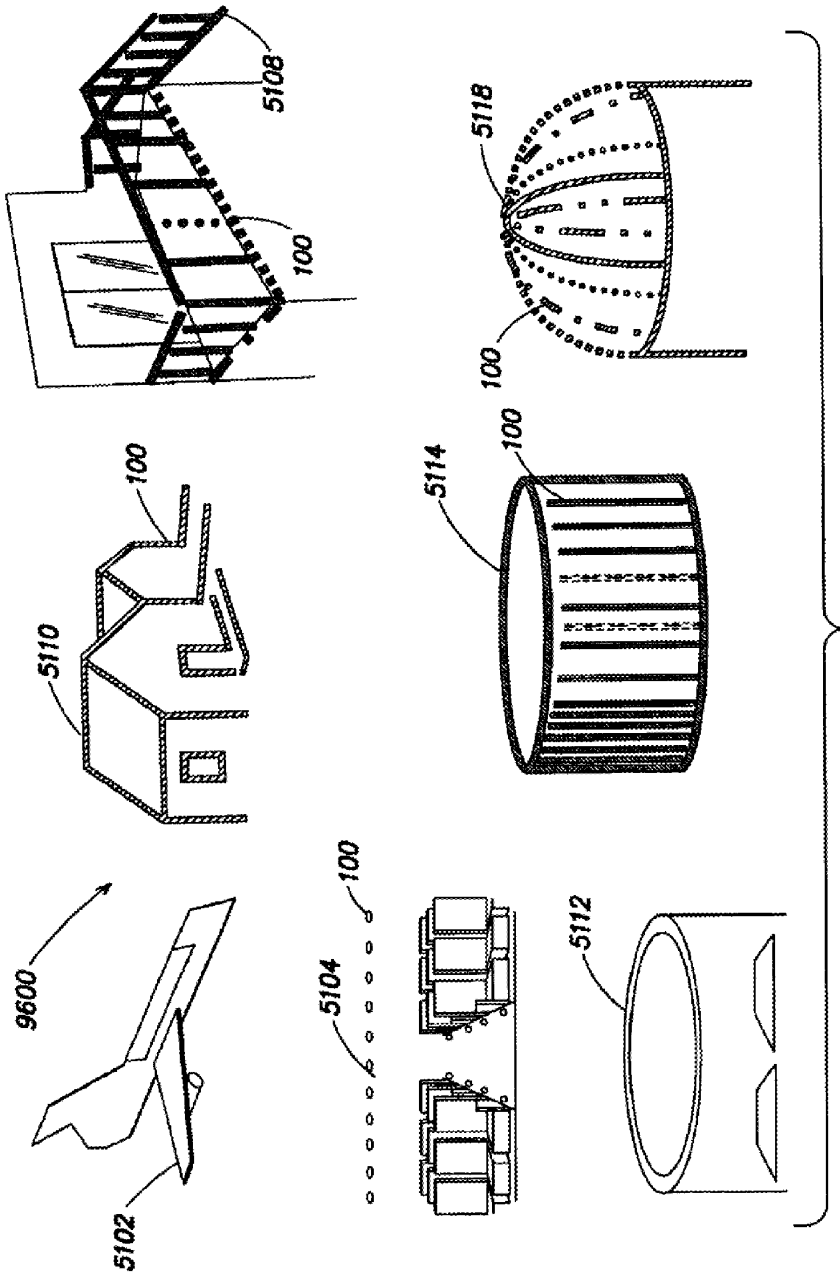

FIG. 51

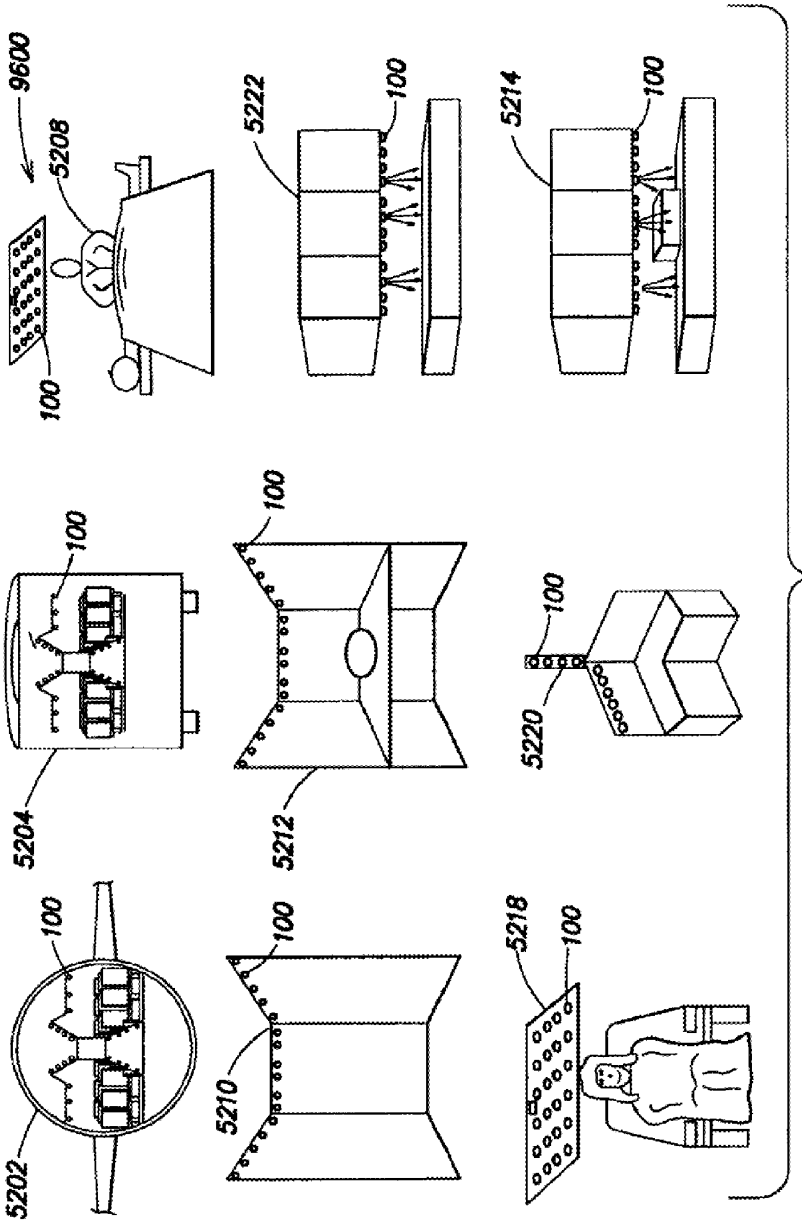
9600
5208
100
5222
100
5214
100
100
5204
100
5212
100
5220
100
5202
100
5210
5218
100

FIG. 52

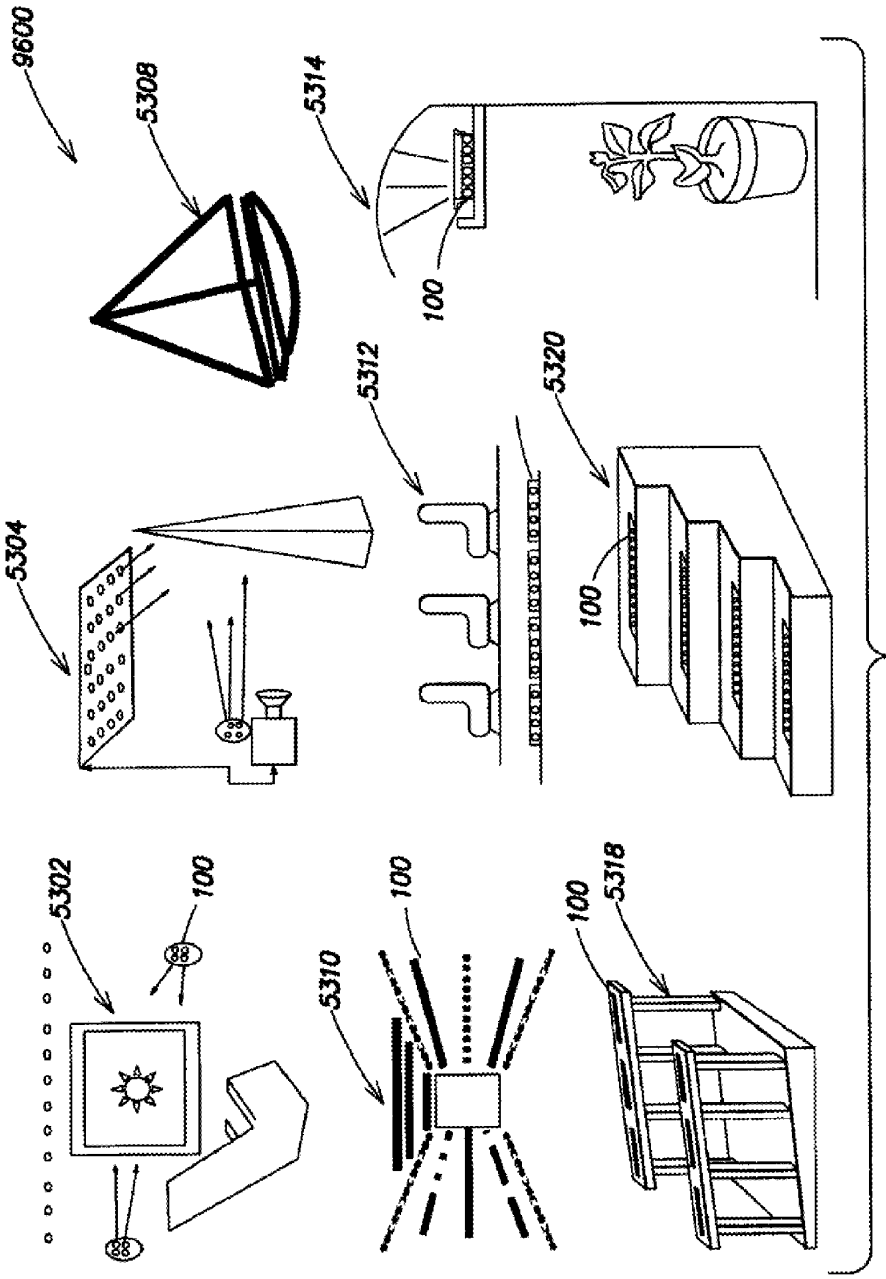
9600
5308
5314
100
5312
5320
5304
100
5302
100
100
5310
100
5318

FIG. 53

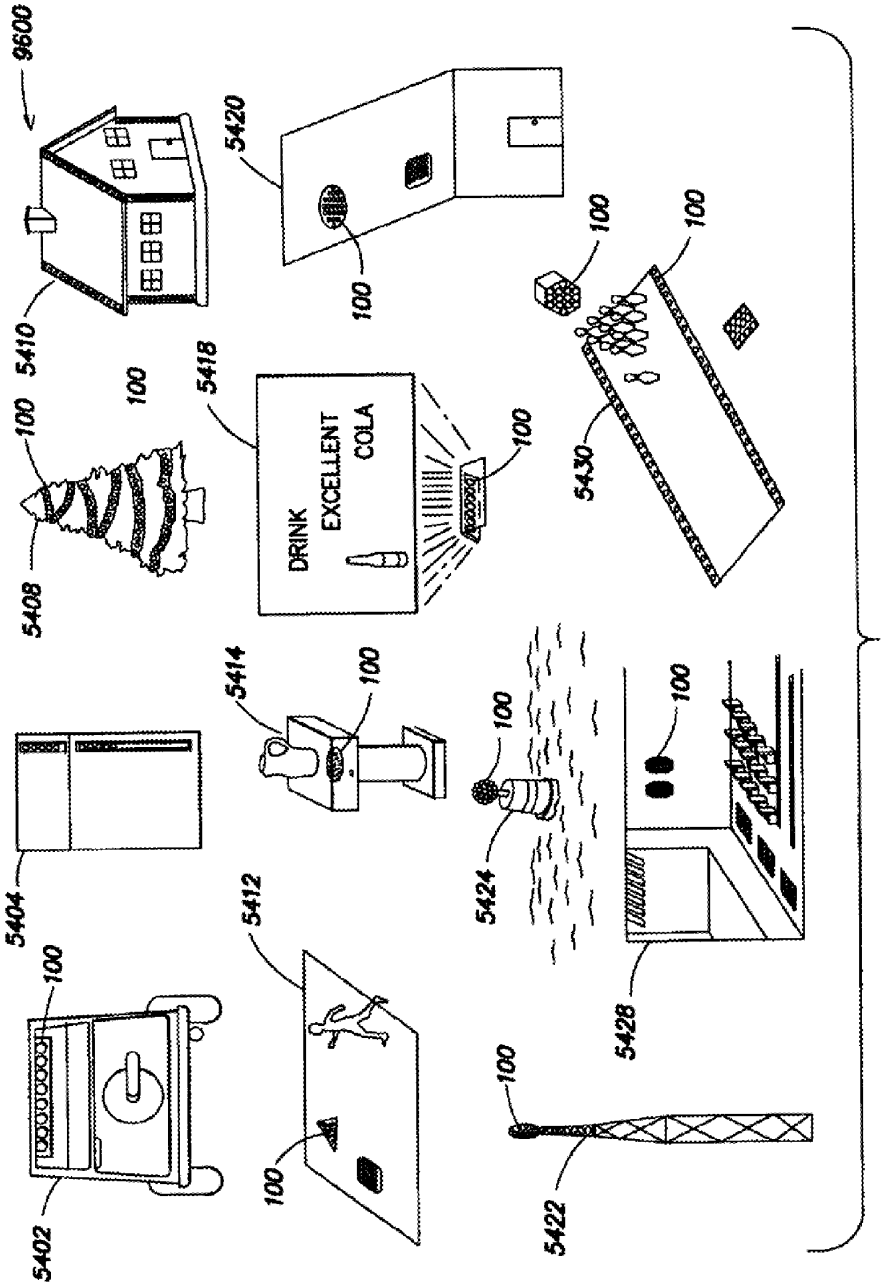
9600
5410
5420
100
5418
DRINK
EXCELLENT
COLA
5408
5430
5414
5404
5424
5412
5428
5402
5422

FIG. 54

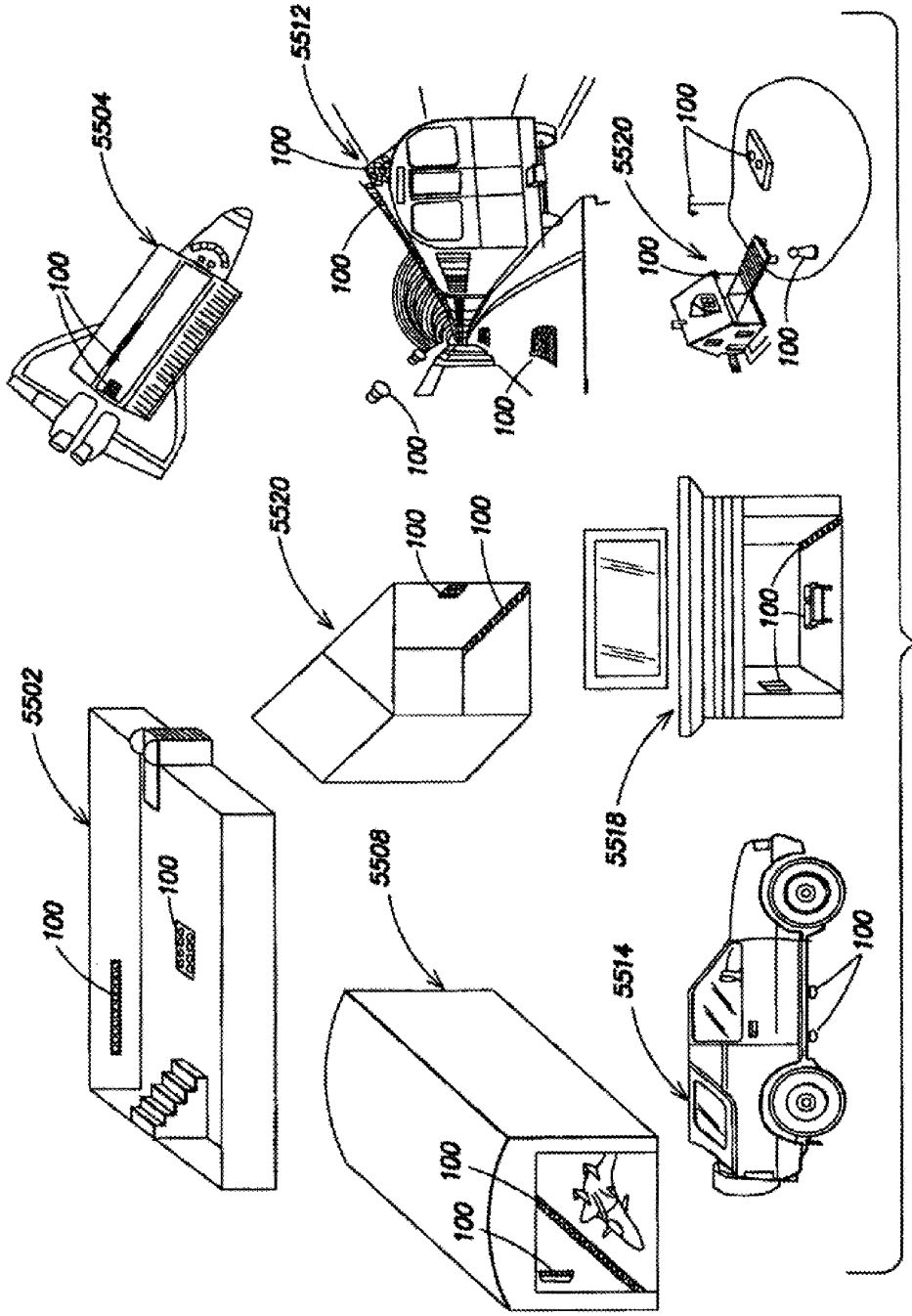
5504
100
5512
100
100
100
100
5520
100
100
100
5520
100
100
5502
100
100
5518
100
5508
100
100
5514
100

FIG. 55

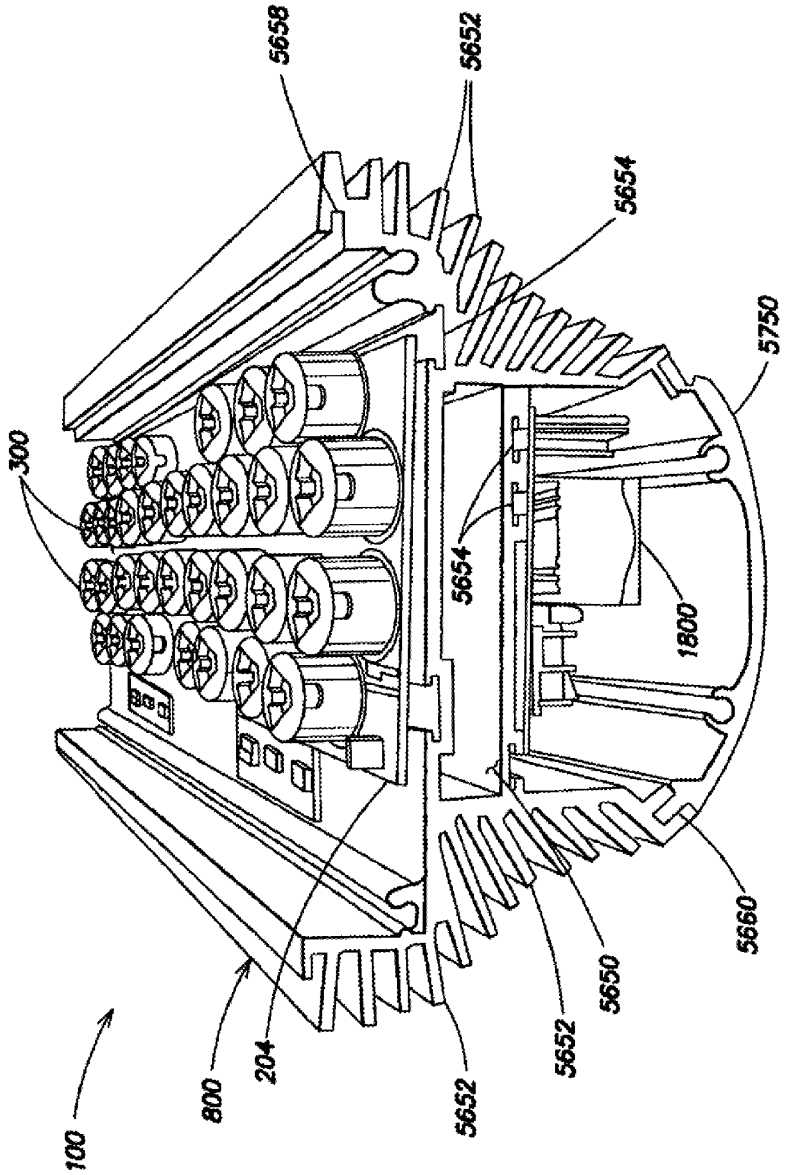
5658
5652
5654
5750
300
5654
1800
5660
5650
5652
5652
204
800
100

FIG. 56

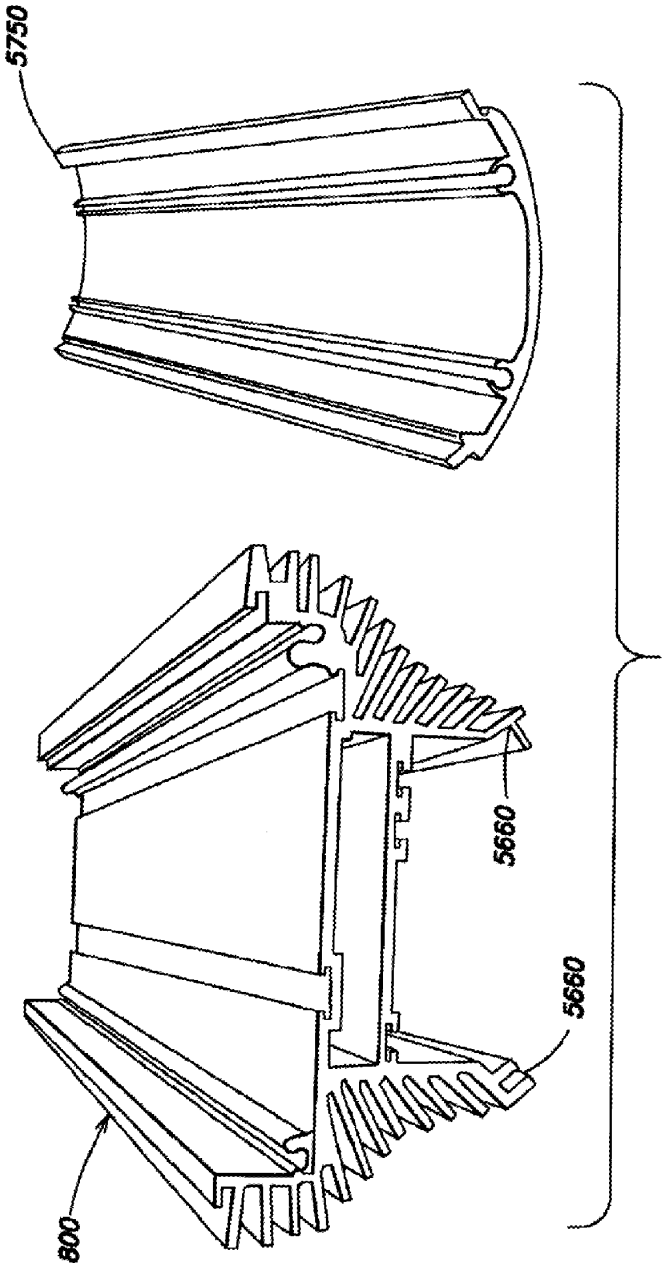

FIG. 57

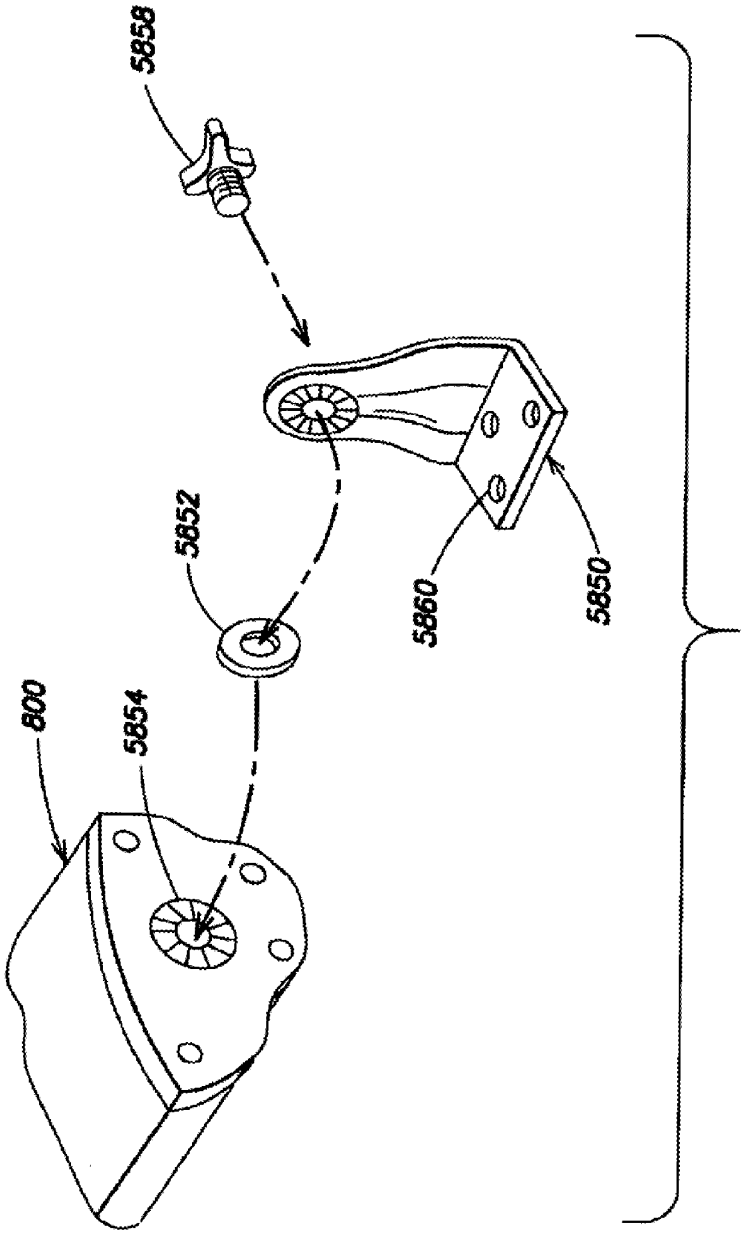

FIG. 58

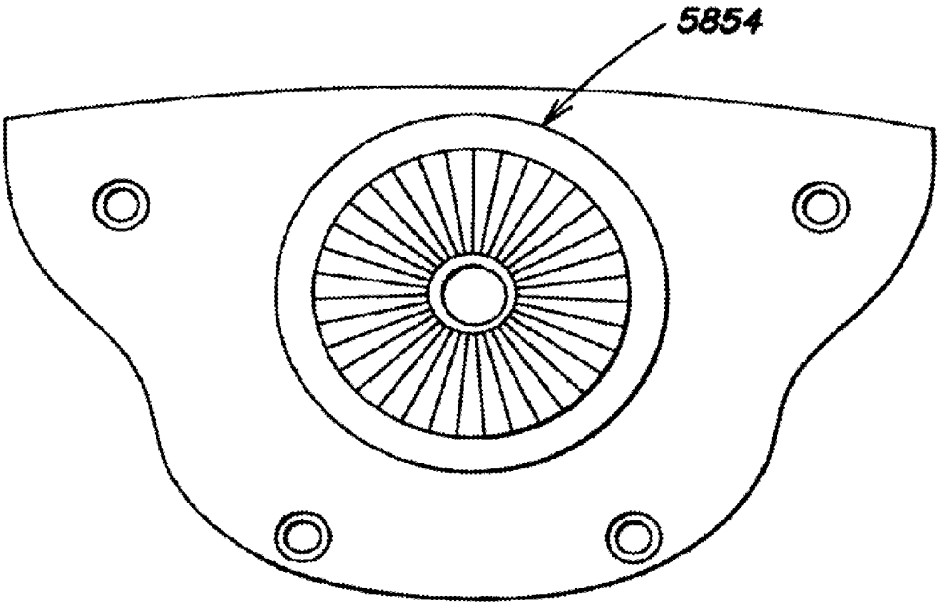

FIG. 59

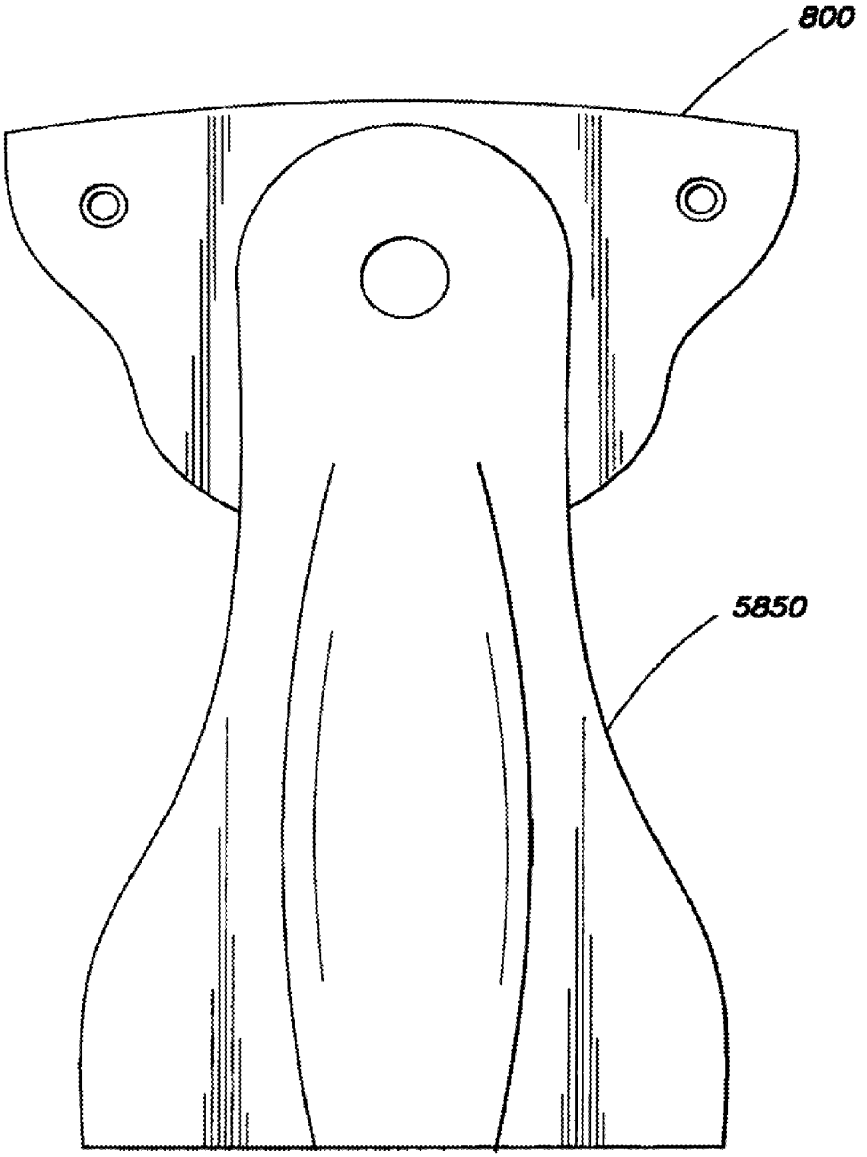

FIG. 60

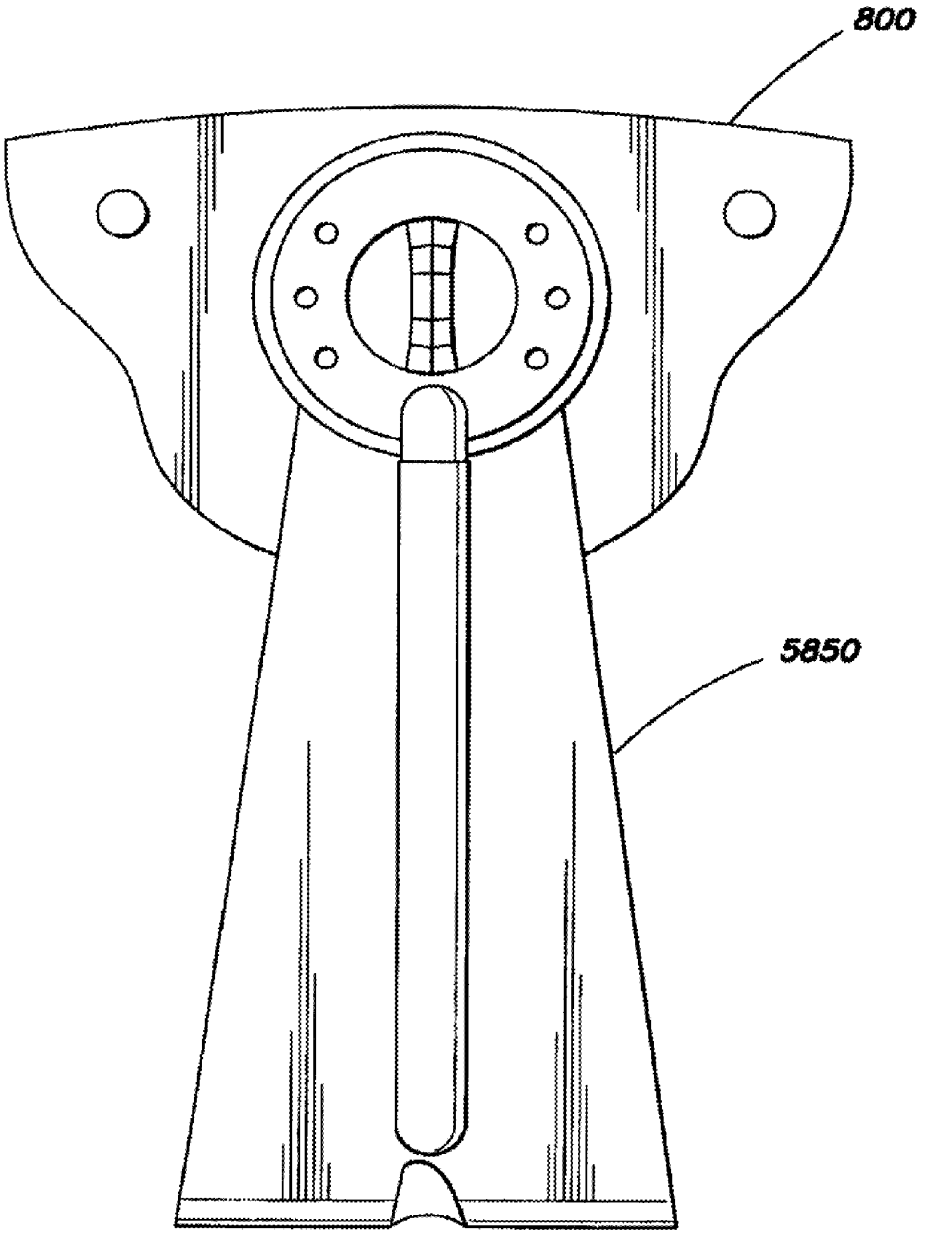

FIG. 61

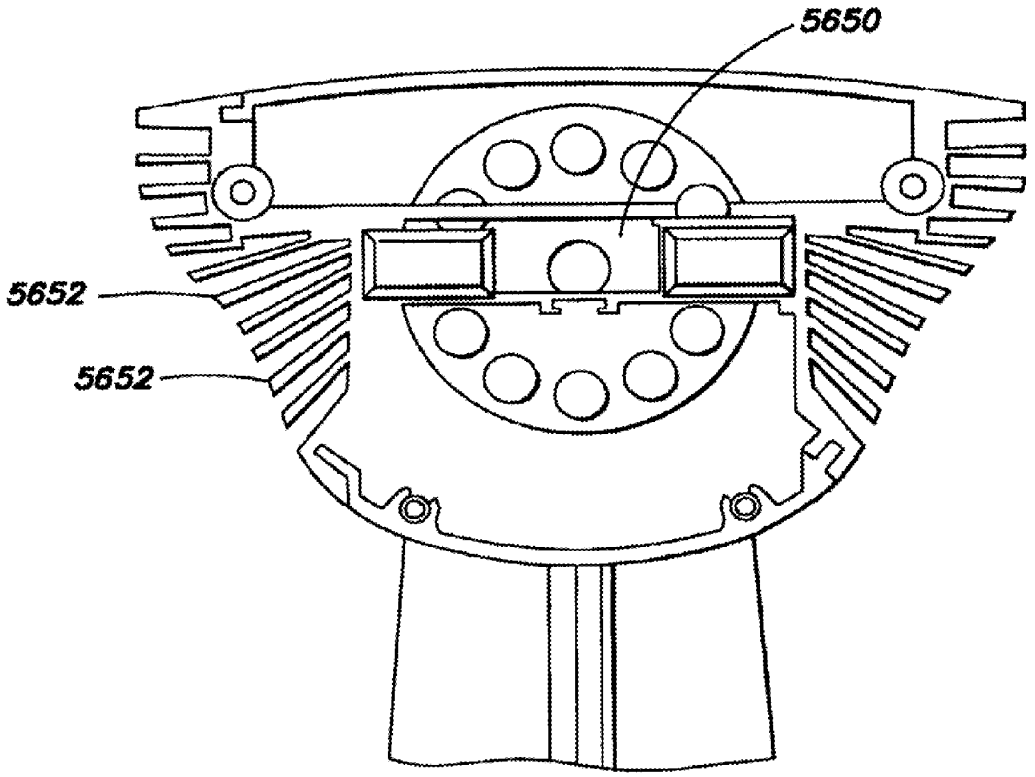

FIG. 62

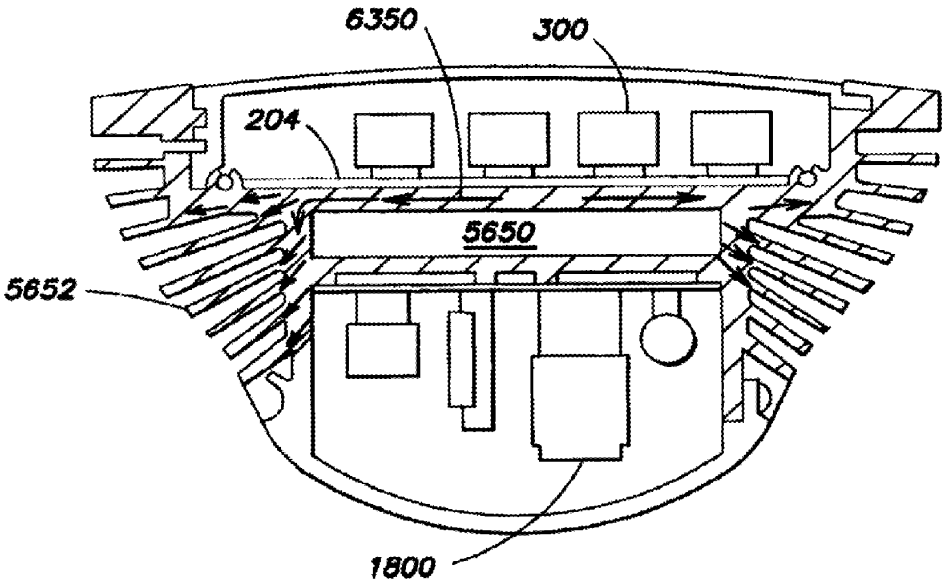

FIG. 63

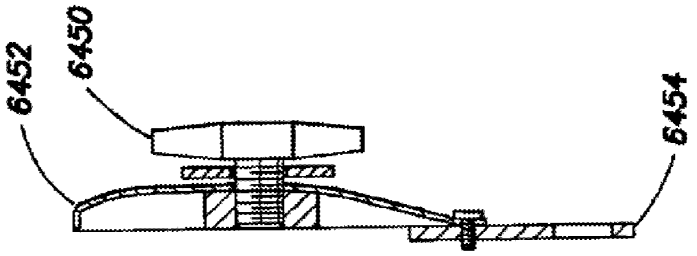

FIG. 64B

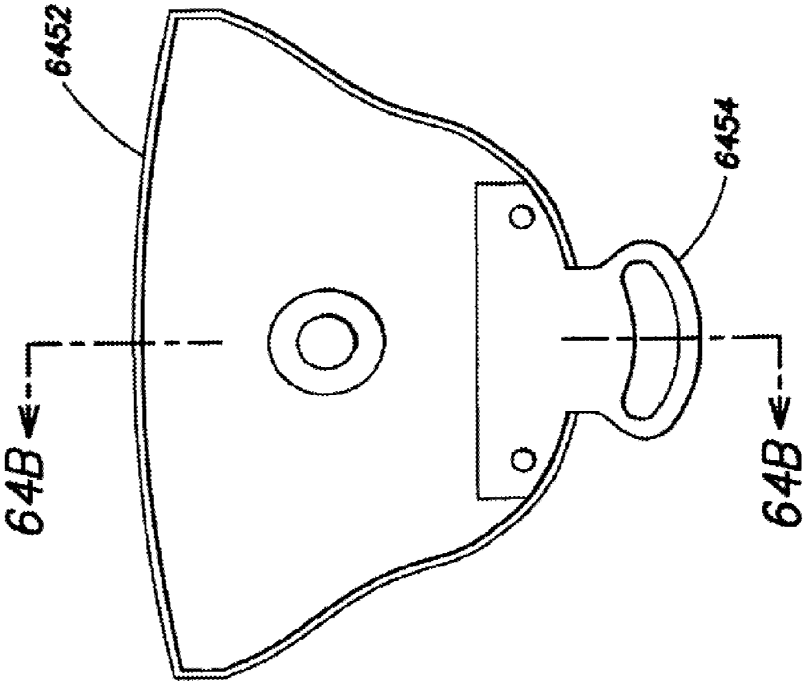

FIG. 64A

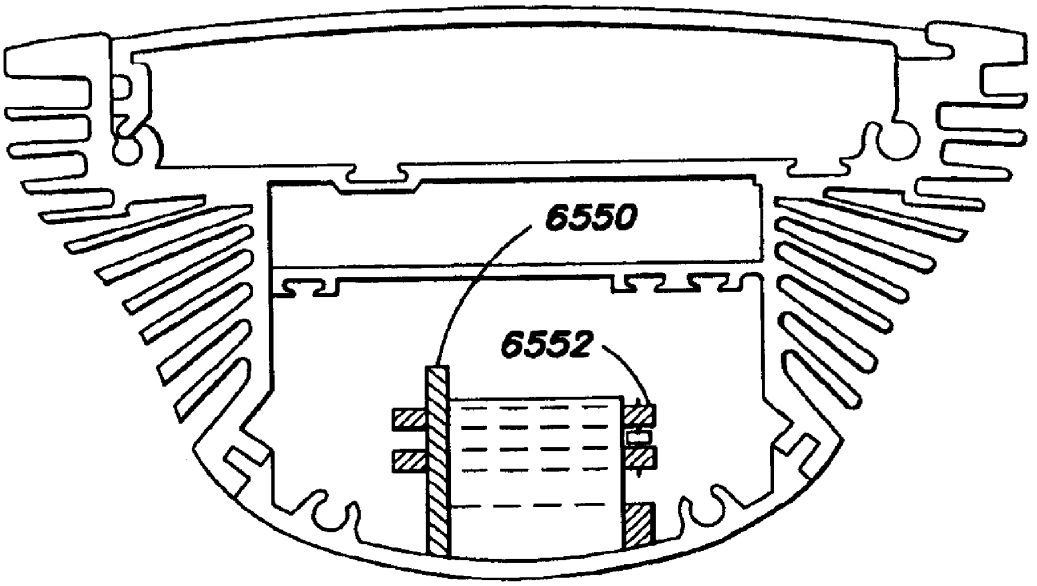

FIG. 65

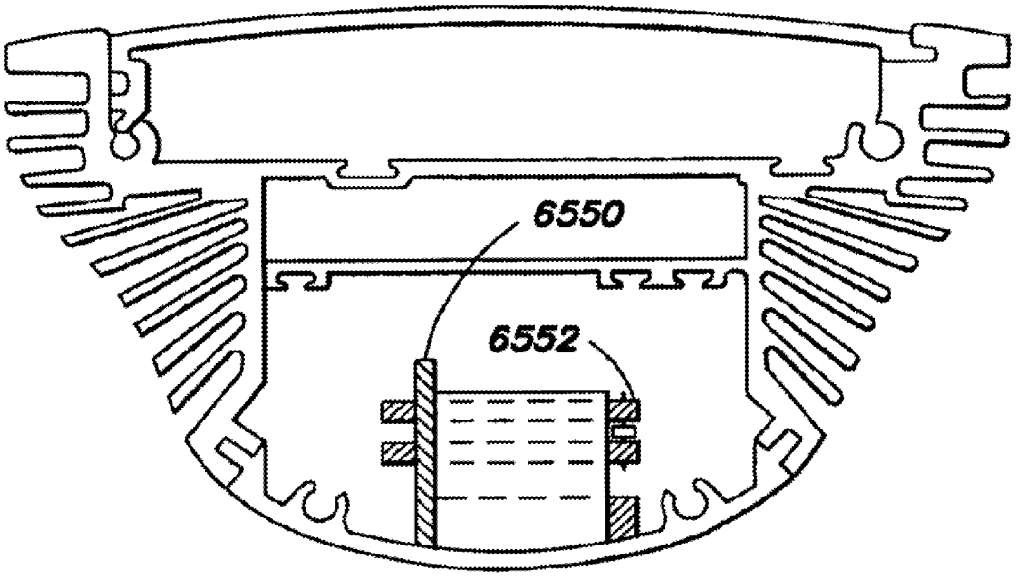

FIG. 66

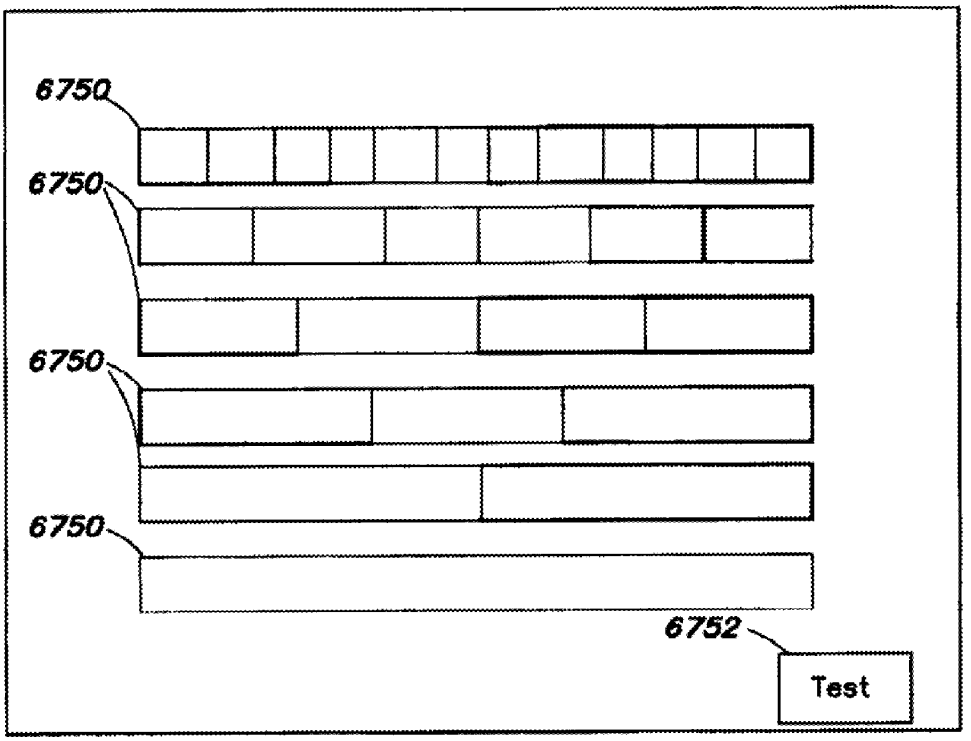

FIG. 67

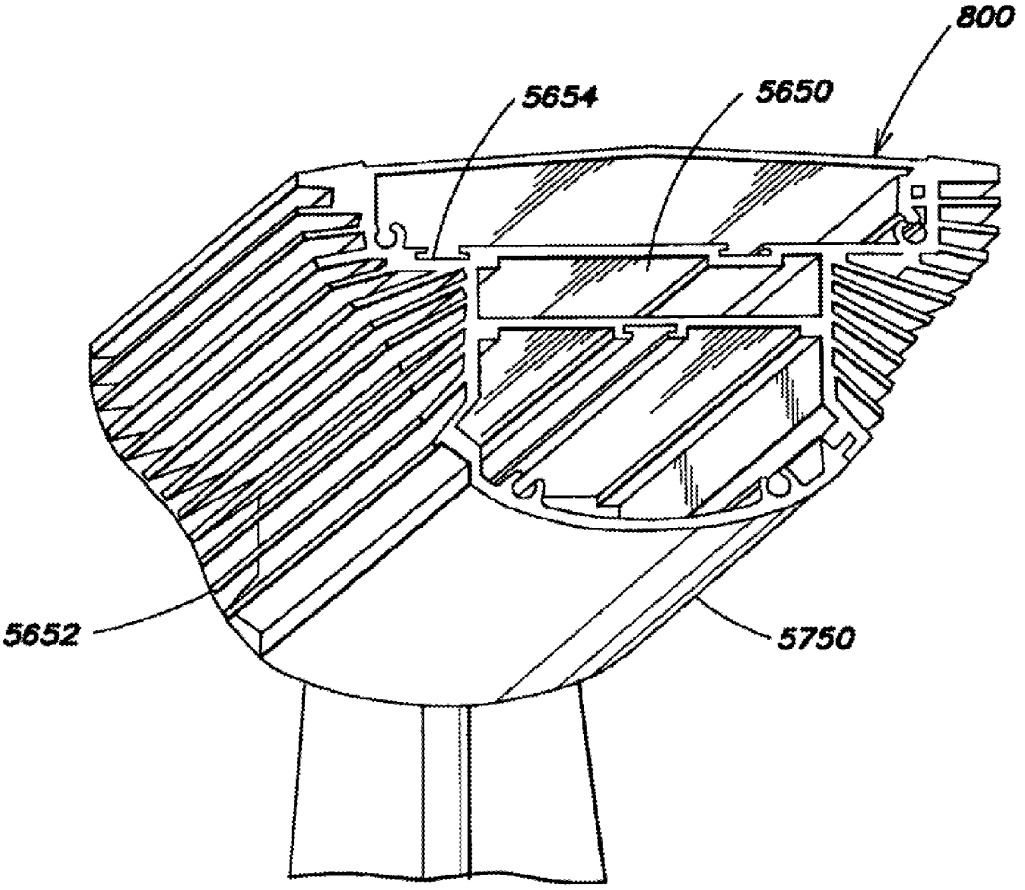

FIG. 68

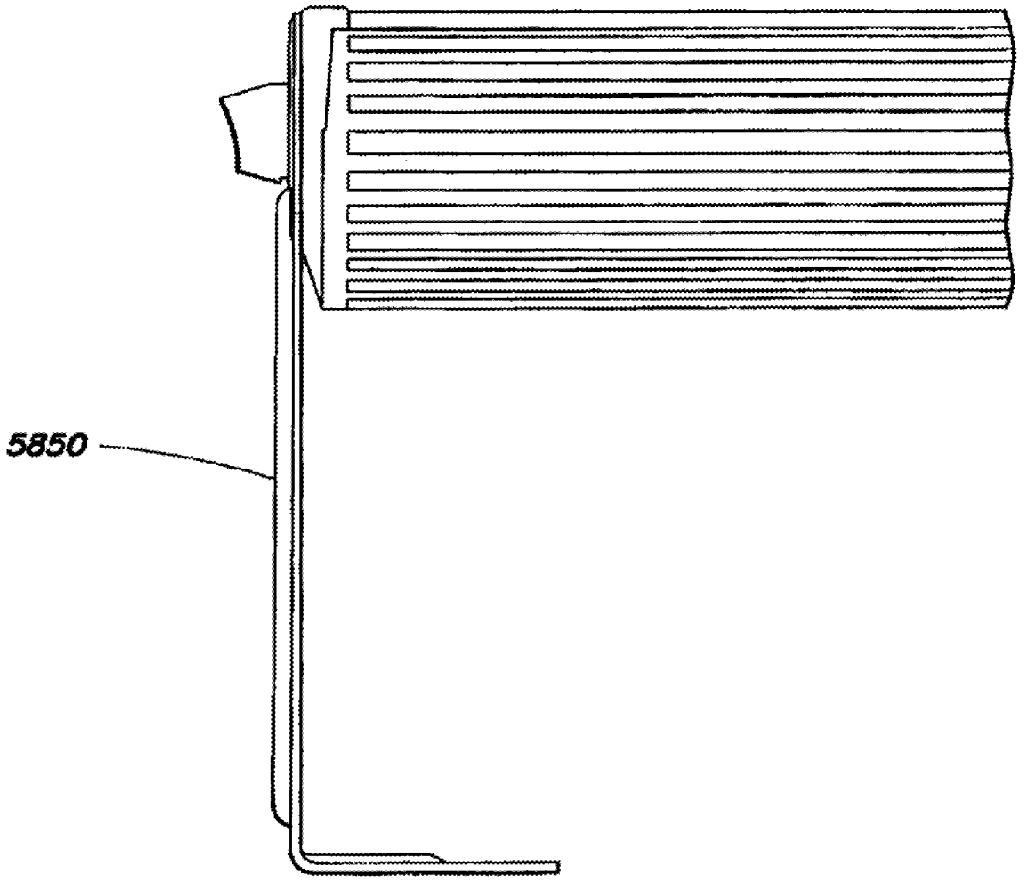

FIG. 69

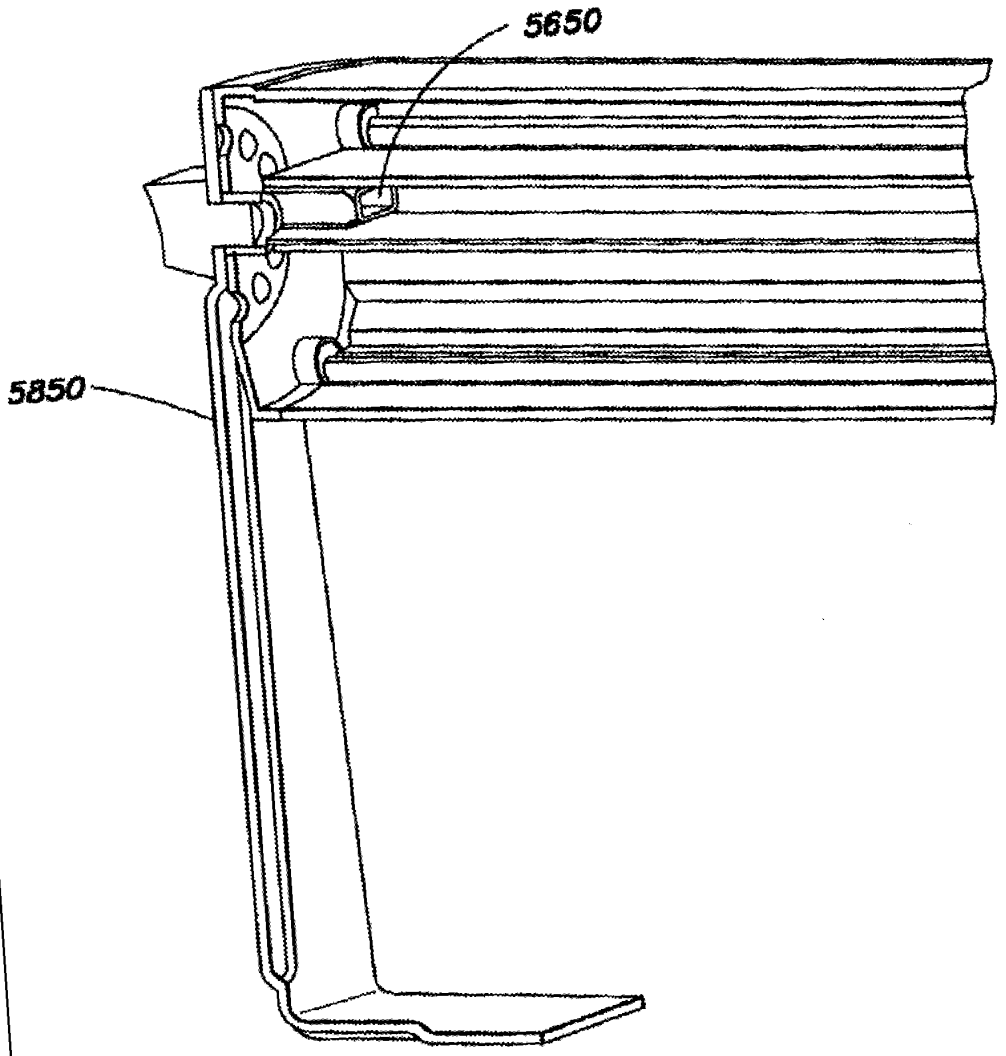

FIG. 70

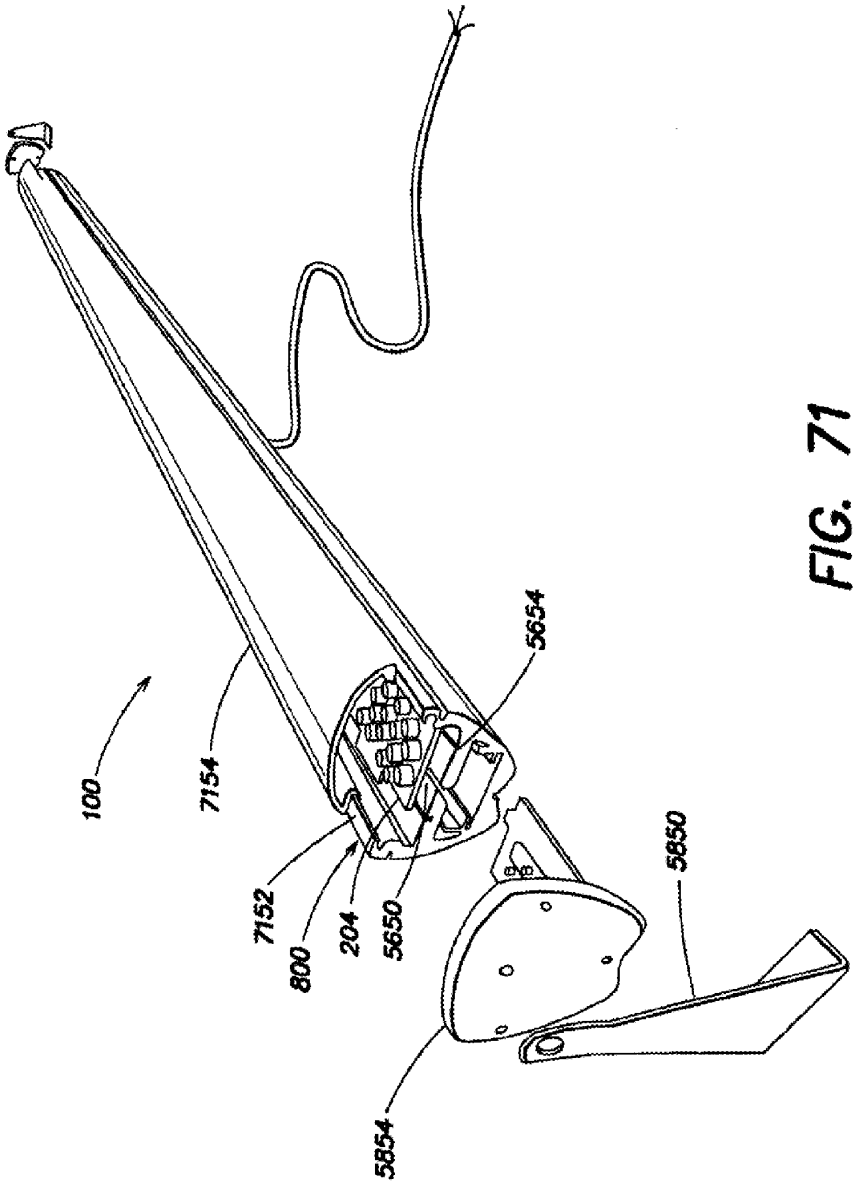

FIG. 71

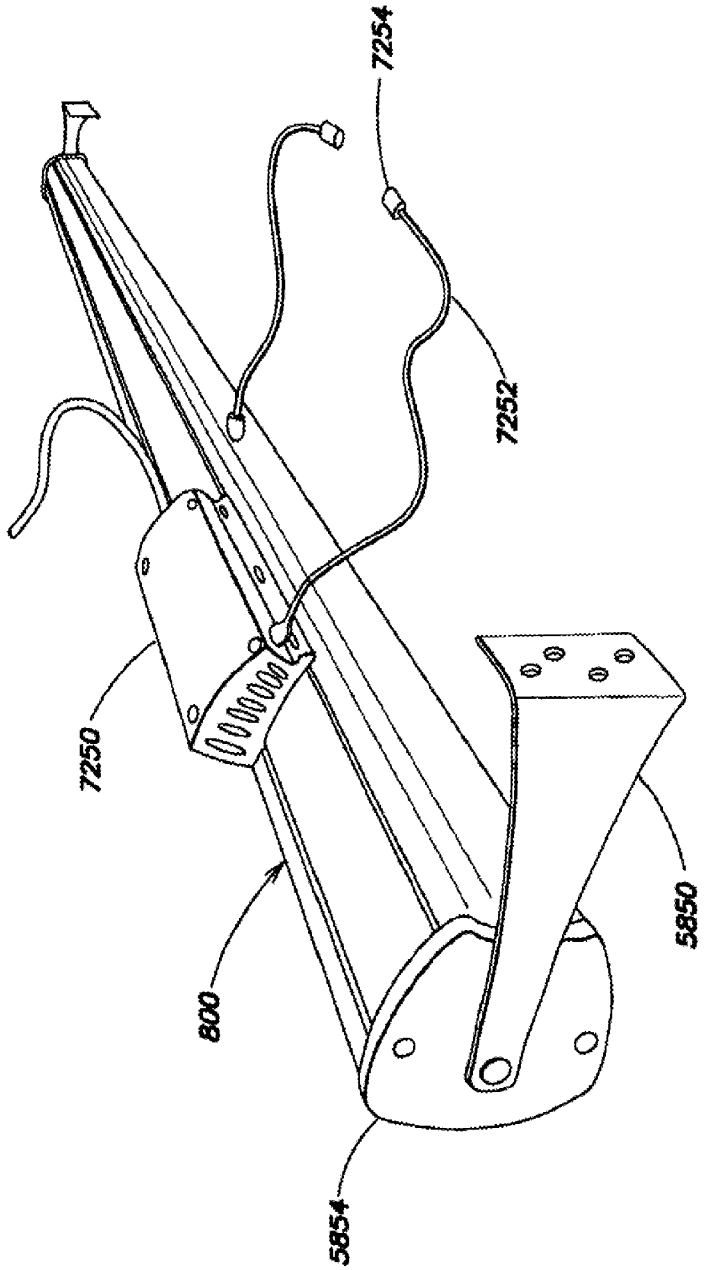

FIG. 72

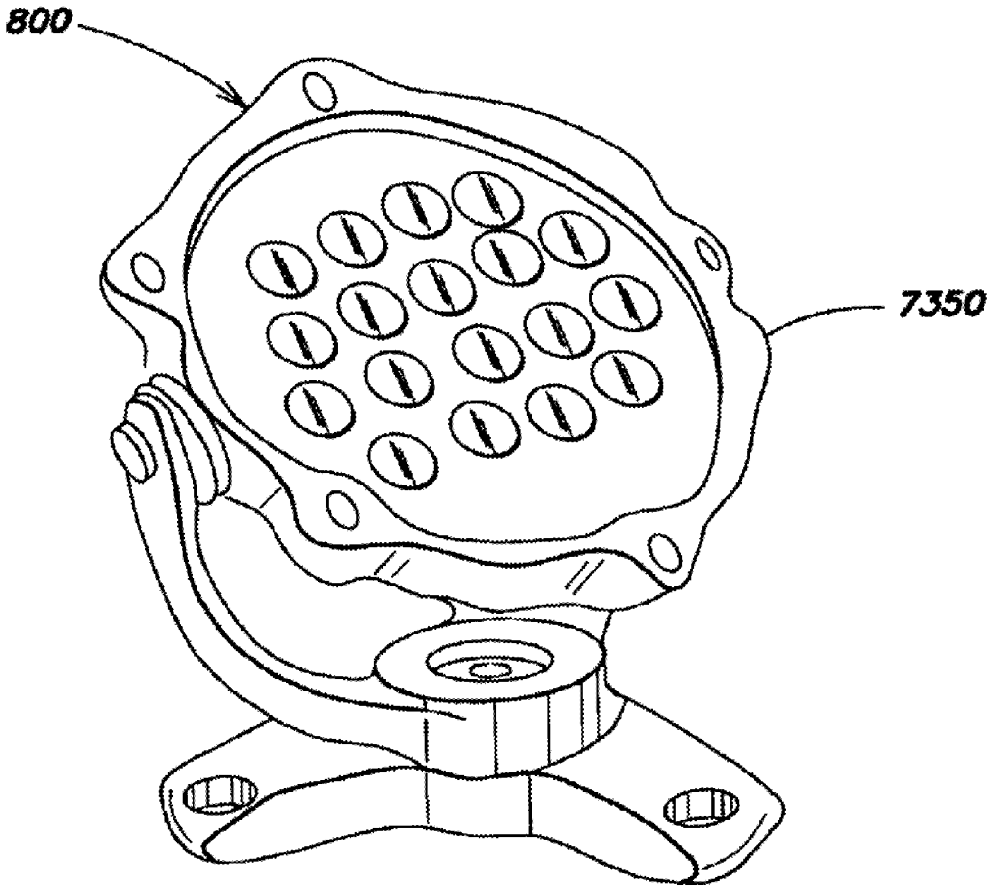

FIG. 73

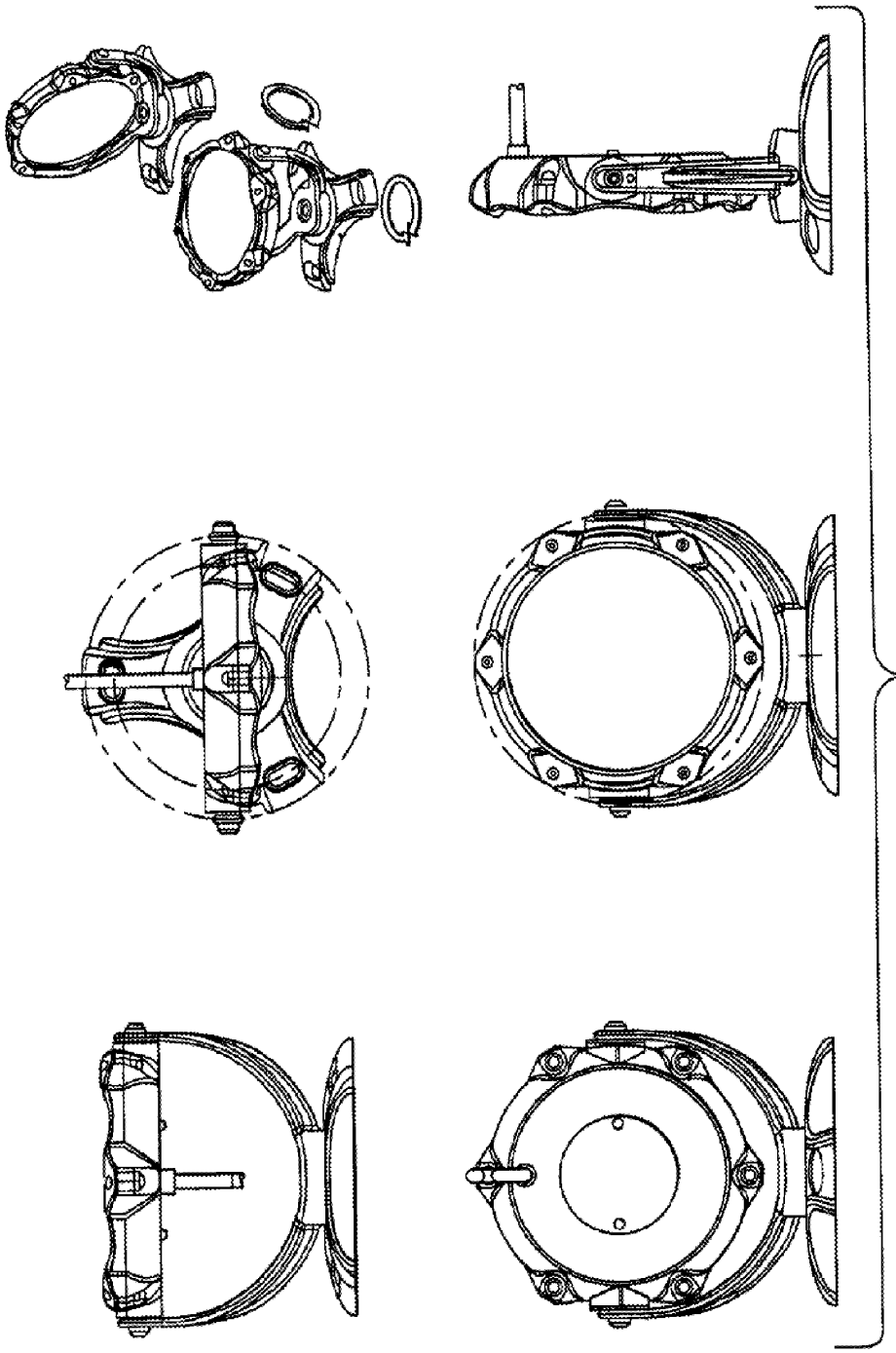

FIG. 74