US009801250B1

(12) **United States Patent**
Halliwell

(10) **Patent No.: US 9,801,250 B1**
(45) **Date of Patent: Oct. 24, 2017**

(54) **LIGHT EMITTING DIODE (LED) LIGHTING DEVICE OR LAMP WITH CONFIGURABLE LIGHT QUALITIES**

(71) Applicant: **Feit Electric Company, Inc.**, Pico Rivera, CA (US)

(72) Inventor: **Brian Halliwell**, Pico Rivera, CA (US)

(73) Assignee: **Feit Electric Company, Inc.**, Pico Rivera, CA (US)

(*) Notice: Subject to any disclaimer, the term of this patent is extended or adjusted under 35 U.S.C. 154(b) by 0 days.

(21) Appl. No.: **15/274,575**

(22) Filed: **Sep. 23, 2016**

(51) **Int. Cl.**

F21V 23/04	(2006.01)
H05B 33/08	(2006.01)
H05B 37/02	(2006.01)
F21K 9/235	(2016.01)
F21V 19/00	(2006.01)
F21K 9/232	(2016.01)
F21V 3/00	(2015.01)

(Continued)

(52) **U.S. Cl.**
CPC ***H05B 33/0857*** (2013.01); ***F21K 9/232*** (2016.08); ***F21K 9/235*** (2016.08); ***F21K 9/237*** (2016.08); ***F21K 9/238*** (2016.08); ***F21K 9/65*** (2016.08); ***F21V 3/00*** (2013.01); ***F21V 19/006*** (2013.01); ***F21V 23/003*** (2013.01); ***F21V 23/04*** (2013.01); ***F21V 29/70*** (2015.01); ***H05B 33/0845*** (2013.01); ***H05B 37/0272*** (2013.01); *F21Y 2115/10* (2016.08)

(58) **Field of Classification Search**
CPC H05B 33/0854; H05B 33/0857; H05B 33/086; F21K 9/23; F21K 9/238; F21K 9/65
See application file for complete search history.

(56) **References Cited**

U.S. PATENT DOCUMENTS

7,484,860 B2 * 2/2009 Demarest A01M 1/2083 362/101
8,729,812 B2 5/2014 Kuwu
(Continued)

OTHER PUBLICATIONS

MSI Solid State Lighting, "Introducing PowerBand™ Variable Wattage Technology", retrieved from <https://www.1000bulbs.com/pdf/led-ipar3843101d-powerband.pdf> on Jan. 11, 2017, 1 page.

(Continued)

Primary Examiner — Jason M Crawford
(74) *Attorney, Agent, or Firm* — Alston & Bird LLP

(57) **ABSTRACT**

An LED lighting device or LED lamp comprises one or more LED packages, driver circuitry configured to provide a controllable electrical current to at least one of the one or more LED packages during operation of the LED lighting device or LED lamp; and a switch comprising at least two selectable options. At least one selectable option corresponds to a set operating mode and one selectable option corresponds to a configurable operating mode. During operation, when the switch is in a position to select the selectable option corresponding to the configurable operating mode, the driver circuitry operates at least one of the one or more LED packages to emit light having operating light qualities corresponding to a most recently received signal indicating a user-selection. The user-selection may be provided through user interaction with an interactive element of the LED lighting device or LED lamp, wall switch, or portable remote switch.

22 Claims, 12 Drawing Sheets

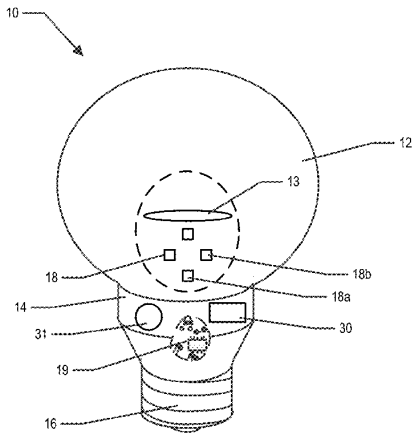

(51) **Int. Cl.**

F21K 9/238	(2016.01)
F21K 9/237	(2016.01)
F21V 29/70	(2015.01)
F21K 9/65	(2016.01)
F21V 23/00	(2015.01)
F21Y 115/10	(2016.01)

(56) **References Cited**

U.S. PATENT DOCUMENTS

9,119,252	B2	8/2015	Wu	
9,441,801	B1	9/2016	Myers et al.	
2002/0048169	A1*	4/2002	Dowling	H05B 33/0857 362/234
2002/0071279	A1*	6/2002	Katogi	H05B 33/0863 362/317
2004/0264187	A1*	12/2004	Vanderschuit	F21S 6/005 362/235
2005/0270780	A1*	12/2005	Zhang	F21V 3/00 362/257
2005/0285547	A1*	12/2005	Piepgras	F21L 4/08 315/294
2006/0238136	A1*	10/2006	Johnson, III et al.	F21S 6/00 315/185 R
2007/0247840	A1*	10/2007	Ham	F21S 9/022 362/227
2008/0106893	A1*	5/2008	Johnson	F21S 6/004 362/228
2010/0328946	A1*	12/2010	Borkar	H05B 33/0845 362/249.02
2011/0193479	A1*	8/2011	Nilssen	F21V 29/004 315/35
2012/0327660	A1*	12/2012	Lin	F21S 9/037 362/253
2013/0003417	A1*	1/2013	Chien	F21S 8/035 362/646
2013/0154510	A1*	6/2013	Sutardja	H05B 33/0827 315/297
2013/0201668	A1*	8/2013	Chien	F21V 3/02 362/183
2014/0049972	A1*	2/2014	McGuire	F21V 21/00 362/427
2015/0070897	A1*	3/2015	Chien	F21V 29/20 362/269
2015/0276204	A1*	10/2015	Ray	F21S 6/001 239/20

OTHER PUBLICATIONS

MSI Solid State Lighting, "iPAR™ 38 with Powerband Technology", retrieved from <https://www.1000bulbs.com/pdf/led-ipar3843101d-specs.pdf> on Jan. 11, 2017, 2 pages.

Unknown Author, "Rambus introduces LED BR30 and PAR30 with mechanically adjustable CCT—LEDs", LEDs Magazine, Jun. 12, 2013, 3 pages, retrieved from <http://www.ledsmagazine.com/articles/iif/2013/06/rambus-introduces-led-br30-and-par30-with-mechanically-adjustable-cct.html> on Jan. 11, 2017.

Philips Lighting, "Philips Lighting unveils Scene Switch—a unique LED light bulb range designed to make multi-purpose homes work harder", Jul. 12, 2016, 6 pages, retrieved from <http://www.newsroom.lighting.philips.com/news/2016/20160712-philips-lighting-unveils-sceneswitch-a-unique-led-light-bulb-range-designed-to-make-multi-purpose-homes-work-harder.html> on Jan. 11, 2017.

Coolux, "Once Again Another Technology Breakthrough of LED Edgt-Lit Panel: The DIP-DIM Panel, 4 Wattage & 3 Color Switchable 130 LM/W", brochure distributed at LIGHTFAIR International 2016 Booth #1111, Apr. 2628, 2016, 4 pages, San Diego, California.

* cited by examiner

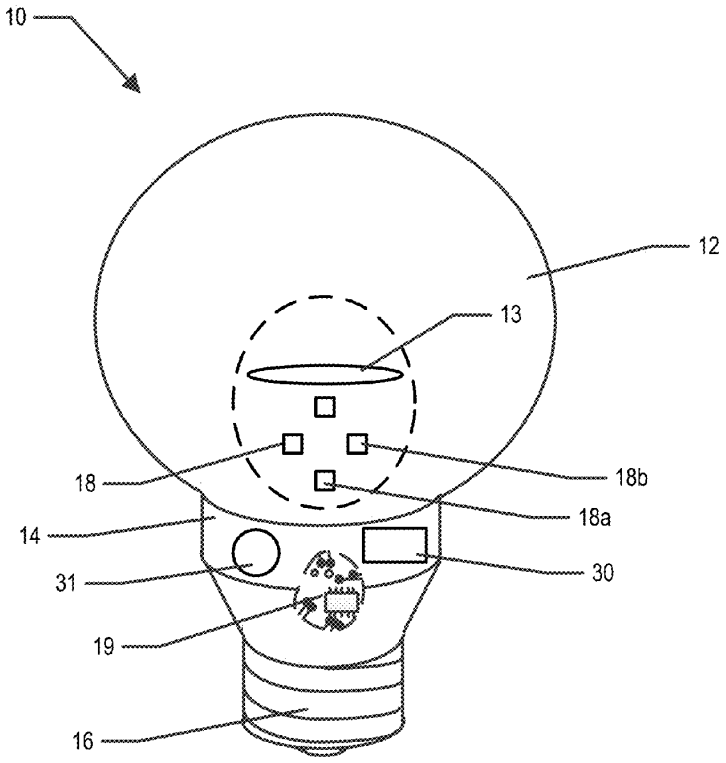

FIG. 1

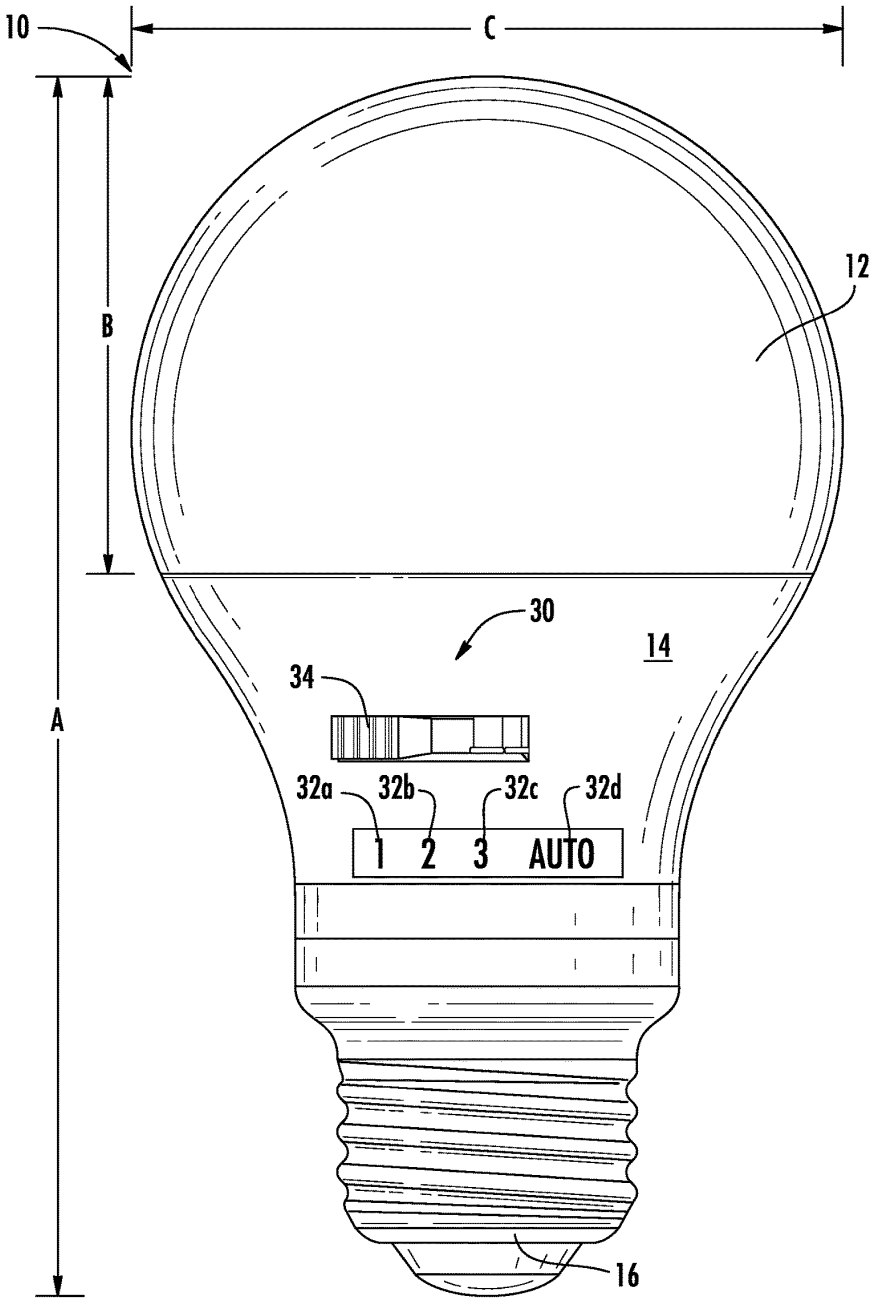

FIG. 1A

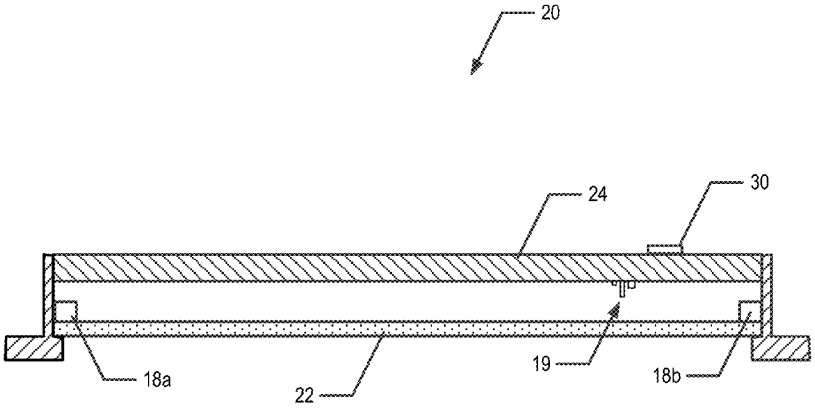

FIG. 2

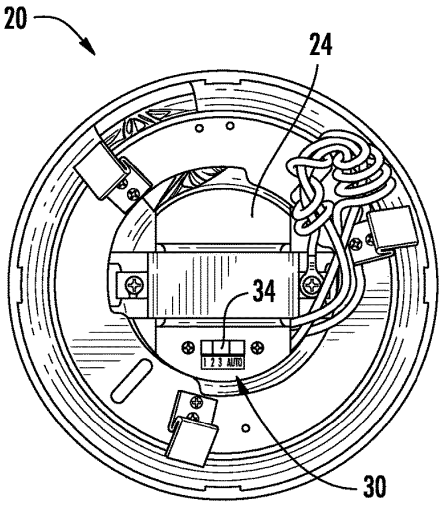

FIG. 2A

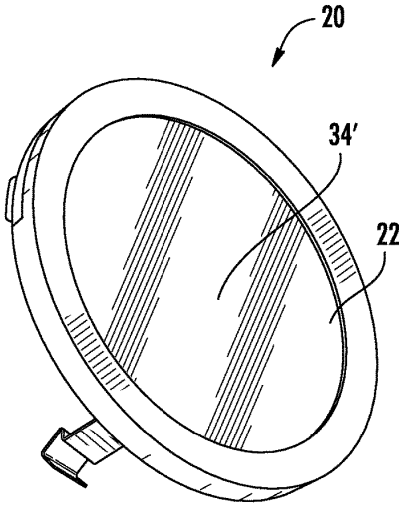

FIG. 2B

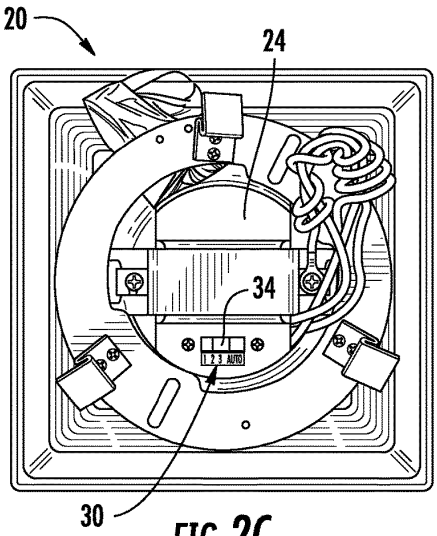

FIG. 2C

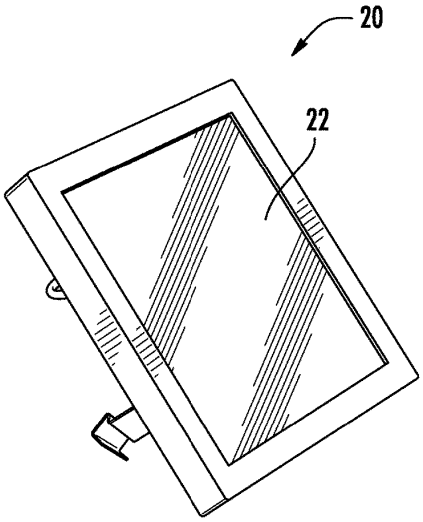

FIG. 2D

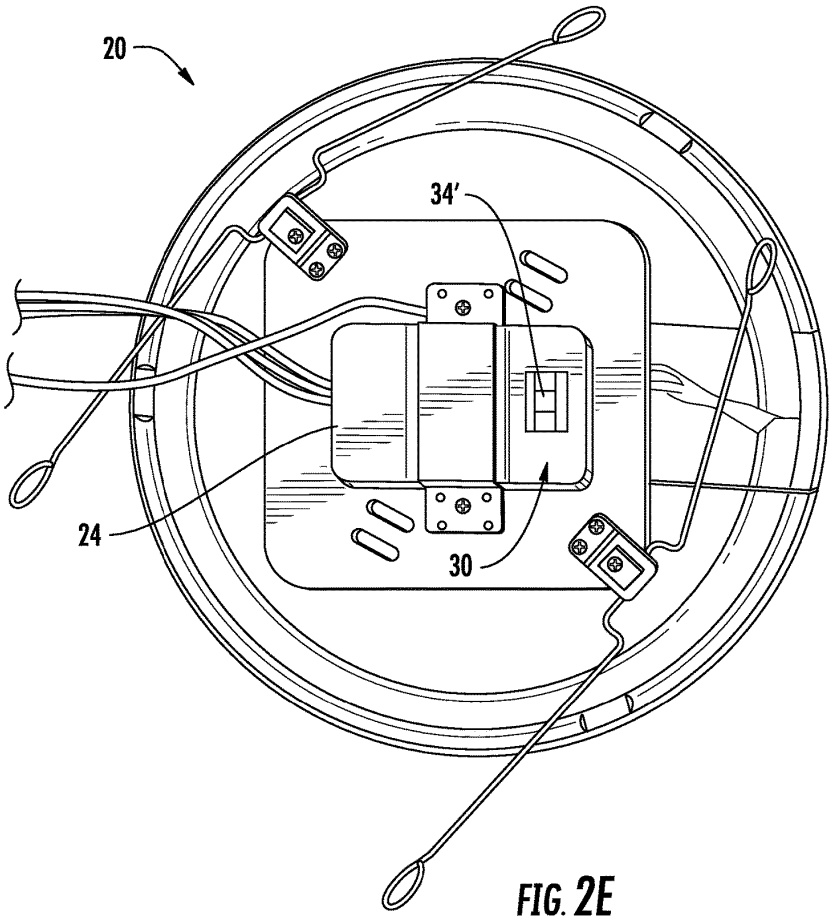

FIG. 2E

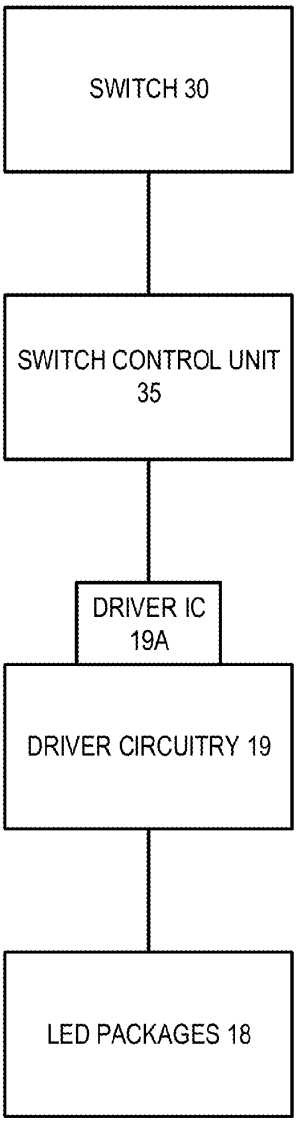
SWITCH 30
SWITCH CONTROL UNIT 35
DRIVER IC 19A
DRIVER CIRCUITRY 19
LED PACKAGES 18

FIG. 3

FIG. 4

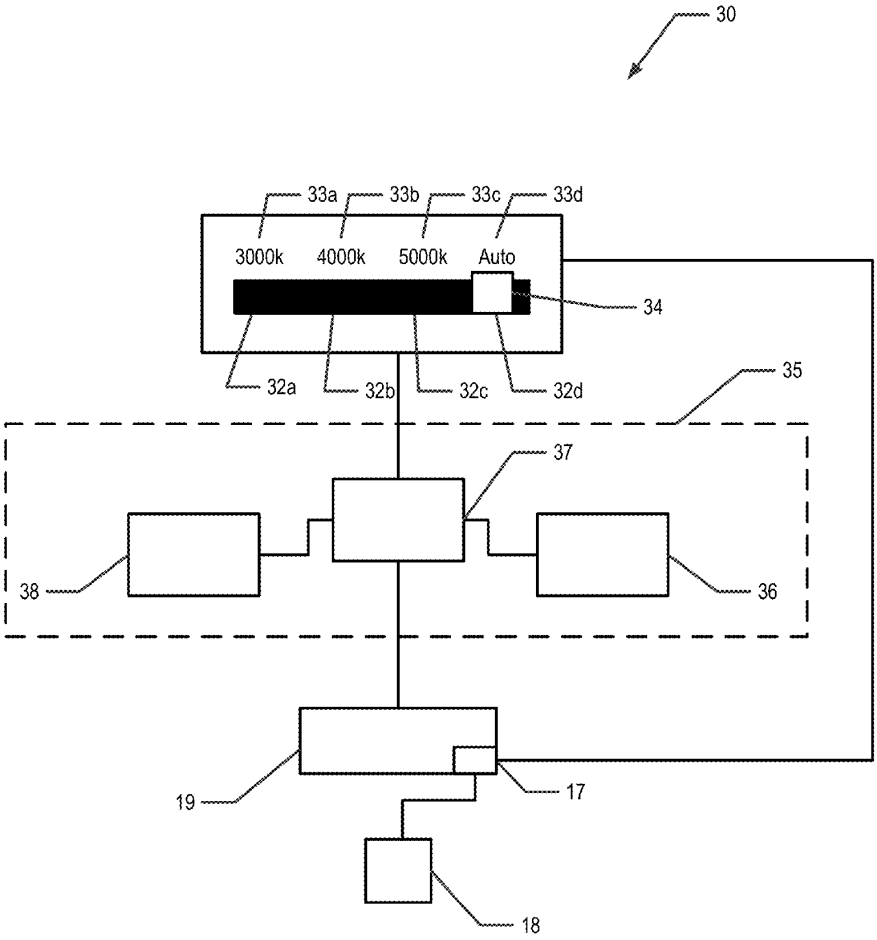
30
33a
33b
33c
33d
3000k
4000k
5000k
Auto
34
32a
32b
32c
32d
35
37
38
36
19
17
18

FIG. 4A

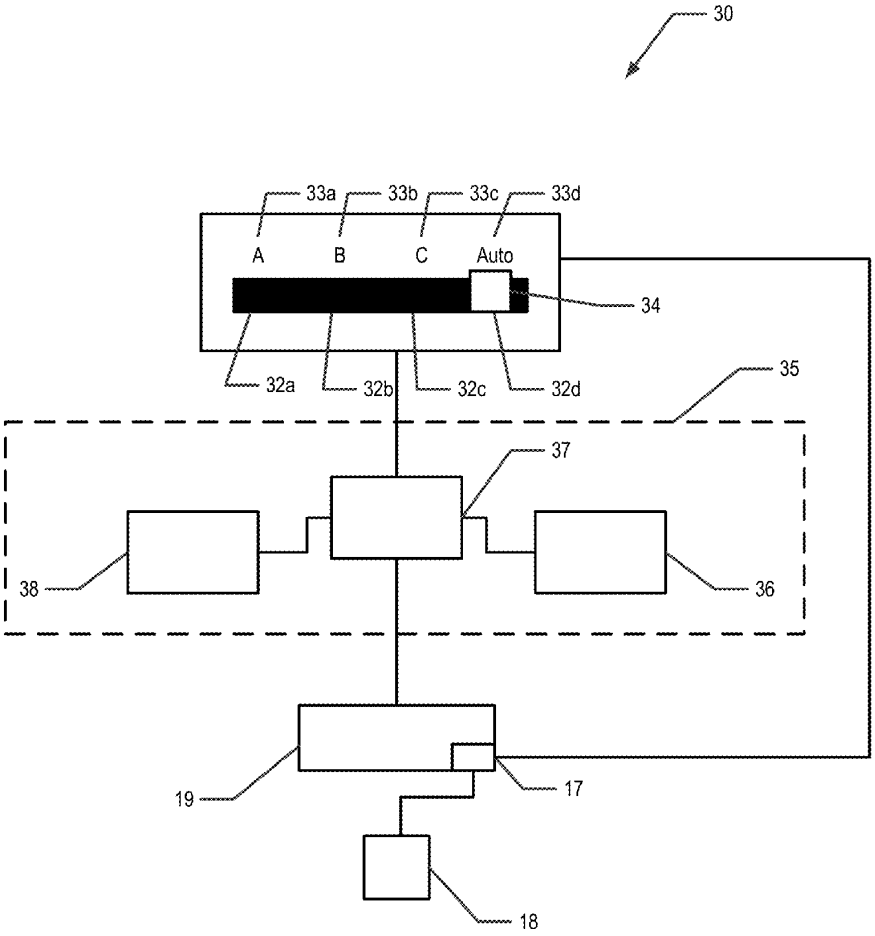

FIG. 5

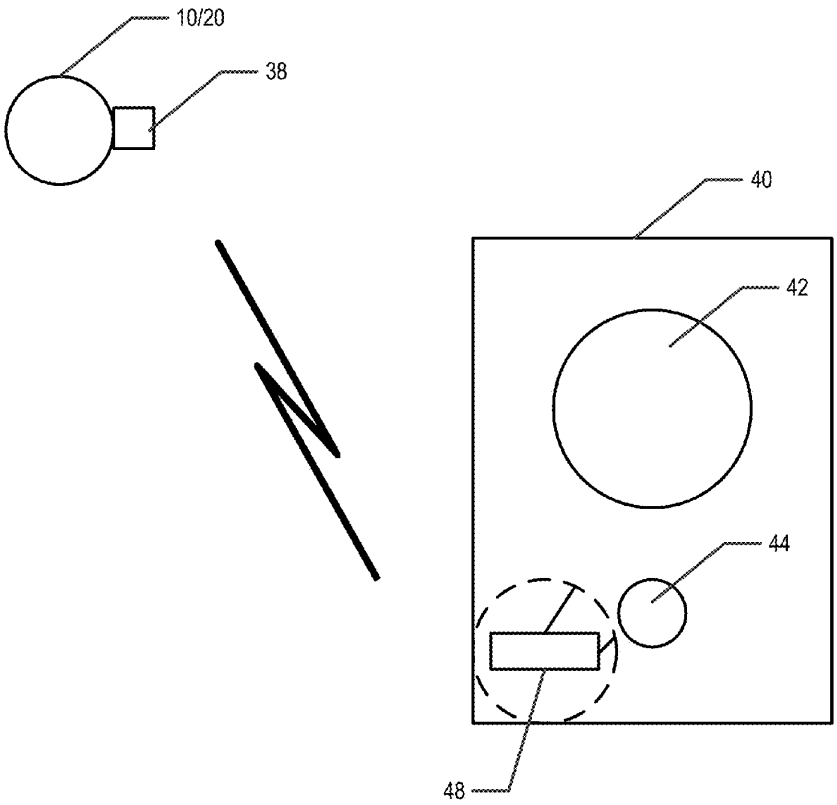

FIG. 6

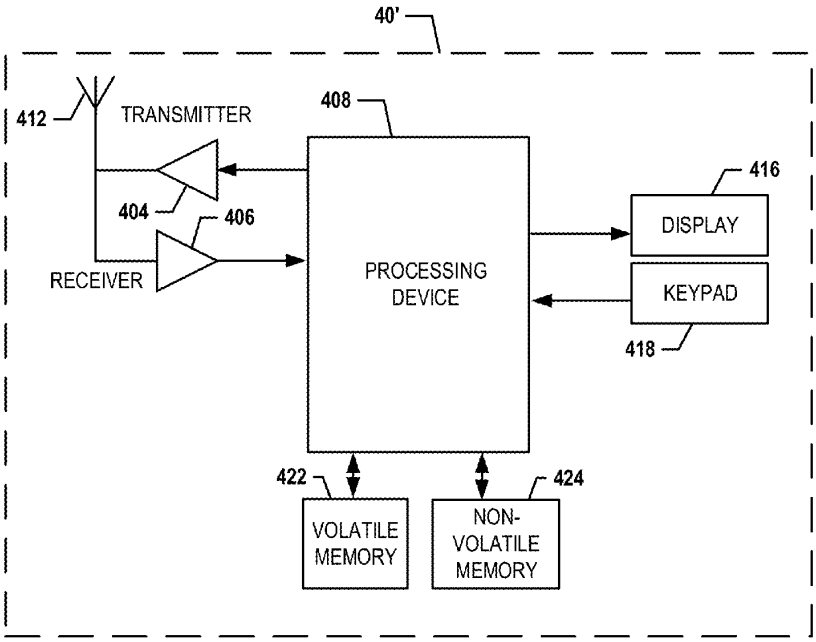
40'
412
TRANSMITTER
408
416
404
406
DISPLAY
RECEIVER
PROCESSING DEVICE
KEYPAD
418
422
424
VOLATILE MEMORY
NON-VOLATILE MEMORY

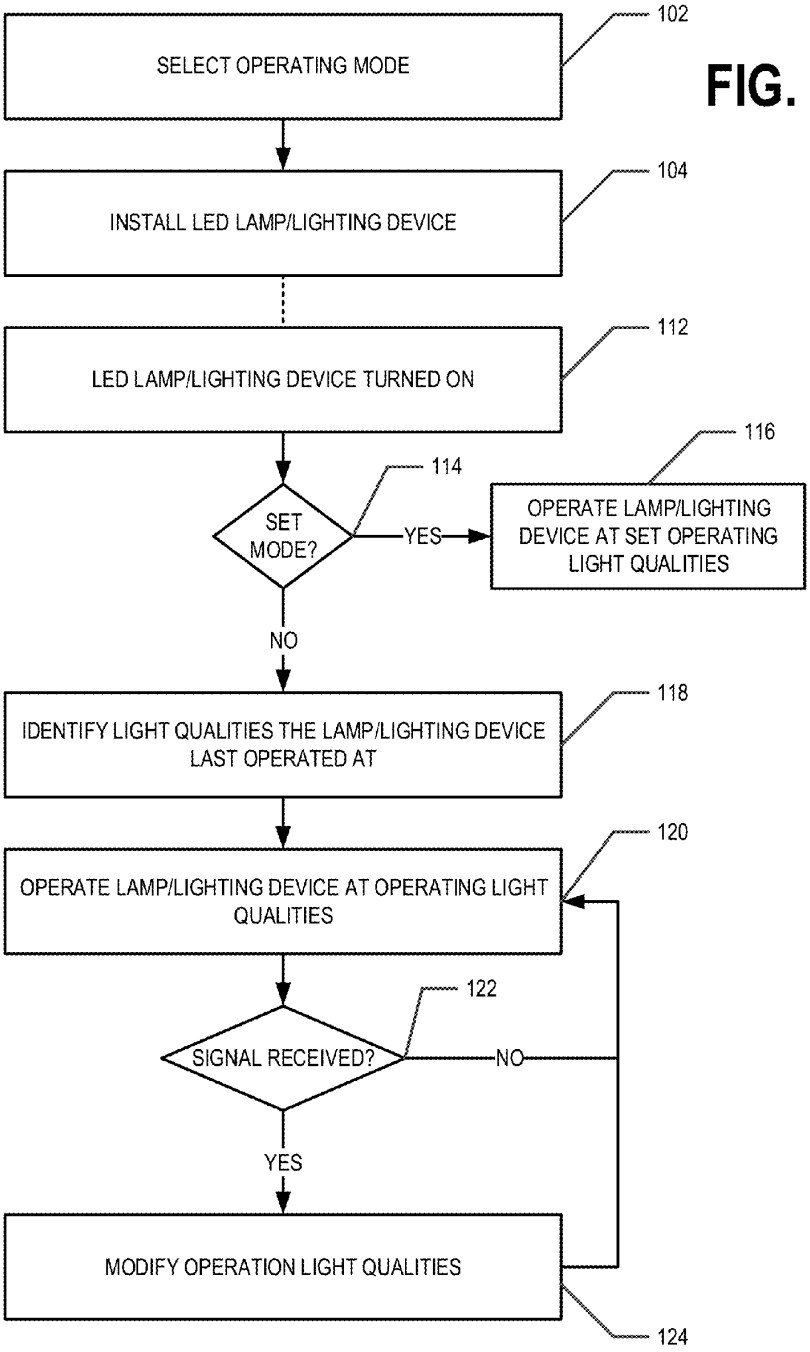
SELECT OPERATING MODE
102
INSTALL LED LAMP/LIGHTING DEVICE
104
LED LAMP/LIGHTING DEVICE TURNED ON
112
SET MODE?
114
YES
OPERATE LAMP/LIGHTING DEVICE AT SET OPERATING LIGHT QUALITIES
116
NO
IDENTIFY LIGHT QUALITIES THE LAMP/LIGHTING DEVICE LAST OPERATED AT
118
OPERATE LAMP/LIGHTING DEVICE AT OPERATING LIGHT QUALITIES
120
SIGNAL RECEIVED?
122
NO
YES
MODIFY OPERATION LIGHT QUALITIES
124

FIG. 7

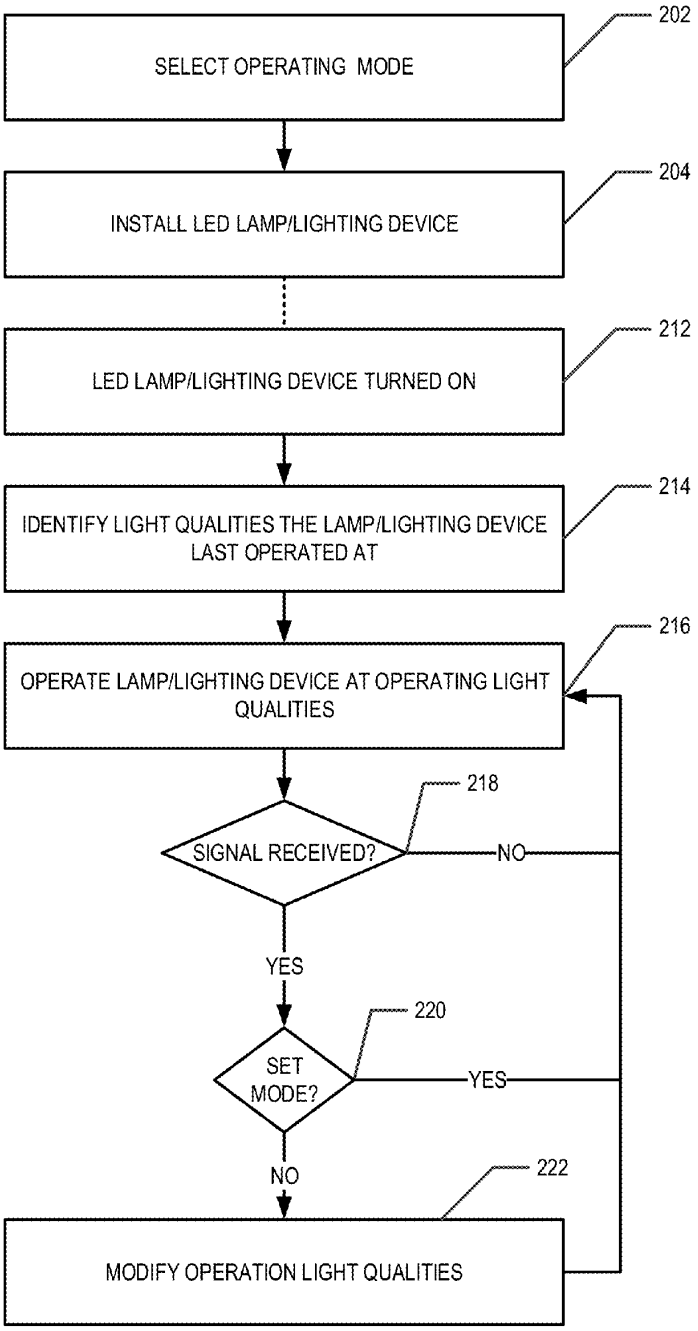
SELECT OPERATING MODE
202
INSTALL LED LAMP/LIGHTING DEVICE
204
LED LAMP/LIGHTING DEVICE TURNED ON
212
IDENTIFY LIGHT QUALITIES THE LAMP/LIGHTING DEVICE LAST OPERATED AT
214
OPERATE LAMP/LIGHTING DEVICE AT OPERATING LIGHT QUALITIES
216
SIGNAL RECEIVED?
218
NO
YES
SET MODE?
220
YES
NO
MODIFY OPERATION LIGHT QUALITIES
222

FIG. 8

LIGHT EMITTING DIODE (LED) LIGHTING DEVICE OR LAMP WITH CONFIGURABLE LIGHT QUALITIES

BACKGROUND

Incandescent bulbs are slowly being phased out in favor of more efficient lighting sources. This has led to an increased use of compact fluorescent bulbs which are more efficient than incandescent bulbs, but which tend to contain dangerous gasses, such as mercury. Compact fluorescent bulbs are also affected by ambient temperature and fail reach their peak brightness in colder conditions. Additionally, many people find the color temperature of light emitted by compact fluorescents to not be aesthetically pleasing for many applications, such as household lighting in kitchens, bathrooms, and living rooms; some commercial applications; and the like. Due to the nature of compact fluorescent bulbs, the bulbs always have a frosted appearance, which also tends to reduce the aesthetic appeal of compact fluorescent bulbs. The use of halogen bulbs has also increased; however due to the high temperatures at which halogen bulbs operate they are not highly efficient and may be a fire or burn hazard.

Recent advances in manufacturing light emitting diodes (LEDs) combined with the efficiency and long lifetime of LEDs have led to an increase in the availability and affordability of LED lamps and other LED lighting devices. LED lamps and lighting devices offer advantages over compact fluorescent bulbs including longer lifetime and the absence of dangerous gasses. Also, LED lamps and lighting devices may be configured to emit light at a wide variety of color temperatures.

Therefore, there is a need in the art for LED lighting devices that allow users to take advantage of the wide variety of color temperatures at which LEDs may emit light.

BRIEF SUMMARY

Embodiments of the present invention provide an LED lighting device or LED lamp for which one or more aspects of the light emitted from the LED lighting device or LED lamp (e.g., color temperature, brightness, color rendering index (CRI), and/or the like) is configurable and/or adjustable. For example, the LED lamp or LED lighting device may allow a user to select an operating mode (e.g., a programmable custom mode, a set mode, or a configurable mode). One or more qualities of the light (e.g., color temperature, brightness, CRI, and/or the like) emitted by the LED lamp or LED lighting device may then be controlled based on the user-selected operating mode. For example, a particular LED lamp or LED lighting device may be configured to emit light at a user-selected color temperature. For example, a user may set one or more light aspects or qualities (e.g., brightness, color temperature, CRI, and/or the like) at which the LED lighting device or LED lamp emits light at the time the LED lighting device or LED lamp is installed. Alternatively, the user may select to place the LED lighting device or LED lamp in a configurable operating mode. In the configurable operating mode, a user may use a remote switch (e.g., a wall switch, remote control, mobile computing device, and/or the like) to change the one or more operating light aspects or qualities at which the LED lighting device or LED lamp emits light during the operation of the LED lighting device or LED lamp. For example, the user may use a remote switch to toggle between preset operating light aspects or qualities.

According to one aspect of the present invention, an LED lighting device or LED lamp is provided. In example embodiments, the LED lighting device or LED lamp comprises one or more LED packages; driver circuitry configured to provide a controllable electrical current to at least one of the one or more LED packages during operation of the LED lighting device or LED lamp; a switch comprising at least two selectable options. At least one selectable option corresponds to a set operating mode and one selectable option corresponds to a configurable operating mode. The LED lighting device or LED lamp further comprises a user-selection switch for receiving user-selection of operating light qualities when the switch is in a position to select the configurable operating mode.

According to another aspect of the present invention, an LED lighting device or LED lamp is provided. In example embodiments, the LED lighting device or LED lamp comprises one or more LED packages; driver circuitry configured to provide a controllable electrical current to at least one of the one or more LED packages during operation of the LED lighting device or LED lamp; and a switch comprising at least two selectable options. At least one selectable option corresponds to a set operating mode and one selectable option corresponds to a configurable operating mode. When the LED lighting device or LED lamp is on and when the switch is in a position to select a selectable option corresponding to a set operating mode, the driver circuitry operates at least one of the one or more LED packages to emit light having set operating light qualities corresponding to the set operating mode. When the LED lighting device or LED lamp is on and when the switch is in a position to select the selectable option corresponding to the configurable operating mode, the driver circuitry operates at least one of the one or more LED packages to emit light having operating light qualities corresponding to a most recently received signal indicating a user-selection, the user-selection provided through user interaction with a wall or junction box mounted remote switch.

According to another aspect of the present invention, an LED lighting device or LED lamp is provided. In example embodiments, the LED lighting device or LED lamp comprises one or more LED packages; driver circuitry configured to provide a controllable electrical current to at least one of the one or more LED packages during operation of the LED lighting device or LED lamp; and a switch comprising at least two selectable options. At least one selectable option corresponds to a set operating mode and one selectable option corresponds to a configurable operating mode. When the LED lighting device or LED lamp is on and when the switch is in a position to select a selectable option corresponding to a set operating mode, the driver circuitry operates at least one of the one or more LED packages to emit light having set operating light qualities corresponding to the set operating mode. When the LED lighting device or LED lamp is on and when the switch is in a position to select the selectable option corresponding to the configurable operating mode, the driver circuitry operates at least one of the one or more LED packages to emit light having operating light qualities corresponding to a most recently received signal indicating a user-selection, the user-selection provided through user interaction with a portable remote switch.

BRIEF DESCRIPTION OF THE SEVERAL VIEWS OF THE DRAWING(S)

Having thus described the invention in general terms, reference will now be made to the accompanying drawings, which are not necessarily drawn to scale, and wherein:

FIG. **1** is a partial cutaway perspective view of an example LED lamp in accordance with an example embodiment of the present invention;

FIG. **1**A is a perspective view of an example LED lamp in accordance with an example embodiment of the present invention;

FIG. **2** is a cross section of an example LED lighting device in accordance with an example embodiment of the present invention;

FIG. **2**A is a back view of an example LED lighting device in accordance with an example embodiment of the present invention;

FIG. **2**B is a front view of the example LED lighting device shown in FIG. **2**A;

FIG. **2**C is a back view of another example LED lighting device in accordance with an example embodiment of the present invention;

FIG. **2**D is a front view of the example LED lighting device shown in FIG. **2**C;

FIG. **2**E is a back view of another example LED lighting device in accordance with an example embodiment of the present invention;

FIG. **3** is a block wiring diagram of an LED lamp or LED lighting device in accordance with example embodiments of the present invention;

FIG. **4** is a block diagram of at least some of the electrical components of an LED lamp or LED lighting device in accordance with example embodiments of the present invention;

FIG. **4**A is another block diagram of at least some of the electrical components of an LED lamp or LED lighting device in accordance with example embodiments of the present invention;

FIG. **5** is a block diagram of a remote switch in communication with an LED lamp or LED lighting device in accordance with example embodiments of the present invention;

FIG. **6** is a block diagram of a computing entity that may be used as a remote switch in communication with an LED lamp or LED lighting device in accordance with example embodiments of the present invention;

FIG. **7** provides a flowchart illustrating processes and procedures of installing and operating an LED lamp or LED lighting device in accordance with example embodiments of the present invention; and

FIG. **8** provides a flowchart illustrating process and procedures of installing and operating an LED lamp or LED lighting device in accordance with other example embodiments of the present invention.

DETAILED DESCRIPTION OF VARIOUS EMBODIMENTS

The present invention now will be described more fully hereinafter with reference to the accompanying drawings, in which some, but not all embodiments of the invention are shown. Indeed, the invention may be embodied in many different forms and should not be construed as limited to the embodiments set forth herein; rather, these embodiments are provided so that this disclosure will satisfy applicable legal requirements. Like numbers refer to like elements throughout.

Example embodiments of the present invention provide an LED lamp or LED lighting device having two or more user selectable modes. Switching between modes may adjust one or more aspects or qualities of the light provided by the LED lamp or LED lighting device when the LED lamp or LED lighting device is operating. For example, switching between modes may adjust the quality of the light provided by the LED lamp or LED lighting device when the LED lamp or LED lighting device is operating. For example, switching between modes may adjust the brightness, color rendering index (CRI), color temperature, and/or the like of the light emitted by the LED lamp or LED lighting device when the LED lamp or LED lighting device is operating.

Example embodiments of the present invention described herein generally relate to an LED lamp or LED lighting device wherein the operating light aspects or qualities (e.g., brightness, color temperature, CRI, and/or the like of the light emitted by the LED lamp or LED lighting device when the LED lamp or LED lighting device is being operated and/or is turned on), is selectively configurable. For example, example embodiments of the present invention described herein generally relate to an LED lamp or LED lighting device wherein the operating color temperature (e.g., the color temperature of the light emitted by the LED lamp or LED lighting device when the LED lamp or LED lighting device is being operated and/or is turned on), is selectively configurable. However, it should be understood that principles of the present invention may be used to provide an LED lamp or LED lighting device for which one or more aspects or qualities of the light provided during operation of the LED lamp or LED lighting device may be modified through selection of a particular mode. Examples of the aspects that may be modified through mode selection may include, but are not limited to, brightness, CRI, color temperature, and/or combinations thereof.

For example, a user may select a desired operating light aspects or qualities (e.g., color temperature, brightness, CRI, and/or the like, and/or a combination thereof) for the LED lamp or LED lighting device before the LED lamp or LED lighting device is installed. Alternatively, the user may select to operate the LED lamp or LED lighting device in a configurable operating mode following installation. For example, the LED lamp or LED lighting device may be operated in a configurable mode that allows a user to change one or more of the operating light aspects or qualities during operation of the LED lamp or LED lighting device using a remote switch. In example embodiments, a remote switch may be a wall mounted switch mounted in the same room as the LED lamp or LED lighting device and/or within a short range communication technology range of the LED lamp or LED lighting device. In another example, the remote switch may be a handheld device (e.g., a remote control) that is within the same room as the LED lamp or LED lighting device, within a short range communication technology range of the LED lamp or LED lighting device, and/or in communication with the LED lamp or LED lighting device through a wireless network.

As noted above, LEDs may be manufactured that emit light at a variety of color temperatures. Moreover, LEDs may be configured to emit light at a variety of brightness, CRI, and/or having other configurable light aspects or qualities. Embodiments of the present invention allow a user to take advantage of the variety of light aspects or qualities at which LEDs may emit light by allowing the user to operate an LED lamp or LED lighting device at a selectable mode such that the user may select and/or modify aspects or qualities of the emitted light. For example, embodiments of the present invention allow a user to take advantage of the variety of color temperatures at which LEDs may emit light by allowing the user to operate an LED lamp or LED lighting device at a selectable configurable operating color temperature. For example, the user may be able to change

the operating color temperature of the LED lamp or LED lighting device as the user desires during the operation of the LED lamp or LED lighting device. The user may also choose to select a programmable operating color temperature for the LED lamp or LED lighting device. For example, the LED lighting device or LED lamp may be programmed to a set operating color temperature mode in which the operating color temperature cannot be changed during operation of the LED lamp or LED lighting device. Thus, embodiments of the present invention allow a user to take advantage of the wide range of color temperatures at which LEDs may produce light.

For example, given the wide array of color temperatures and other light aspects or qualities (e.g., brightness, CRI, etc.) available in LED lamps and LED lighting devices, retailers need to stock a variety of different color temperature, brightness, and/or other light aspect or quality options for each style of LED lamp and/or LED lighting device to provide consumers with the options the consumer's desire. Moreover, it is common in multiple purpose rooms (e.g., family rooms, etc.) that different lighting options may be desired. For example, a light having an operating color temperature of 5000 k may be desired if a user is sitting on the couch reading, but the user may prefer a light having an operating color temperature of 3000K when watching television. Traditionally this would require the user to have two lighting options available in the same room. However, example embodiments of the present invention allow the user to have a light source of operating temperature of 3000K and a light source of operating temperature of 5000K while only requiring one lighting device. Similarly, with example embodiments of the present invention, retailers need only to stock LED lamps and/or LED lighting devices based on the style of the lamp and/or lighting device as the operating color temperature and/or other light aspects or qualities of the lamp and/or lighting device are selectable.

In example embodiments, the LED lamp **10** or LED lighting device **20** allows a user to select an operating mode (e.g., a programmable custom mode, a set mode, or a configurable mode). One or more qualities of the light (e.g., color temperature, brightness, CRI, and/or the like) emitted by the LED lamp **10** and/or LED lighting device **20** may then be controlled based on the user-selected operating mode. One or more qualities of the light emitted by the LED lamp **10** and/or LED lighting device **20** may be modified through mode switching (e.g., using switch **30**) and/or configured using a remote switch **40** when the user-selected mode is a configurable mode.

Example LED Lamp

FIG. **1** provides a partial cutaway perspective view of an example LED lamp **10** in accordance with an example embodiment of the present invention. Additionally, FIG. **1**A provides a perspective view of an example LED lamp **10** in accordance with an example embodiment of the present invention. In example embodiments, the LED lamp **10** may comprise a lamp envelope **12**, a lamp housing **14**, a lamp base **16**, two or more LED packages **18**, driver circuitry **19**, a switch control unit **35**, a switch **30**, and/or the like. In example embodiments, the lamp envelope **12** may be transparent, translucent, and/or semi-translucent and configured to enclose the optical components (e.g., the two or more LED packages **18**, optics **13**, and/or the like). In example embodiments, the lamp housing **14** may be configured to house the driver circuitry **19**, switch control unit **35** (shown in FIG. **4**), a heat sink, heat dissipation elements (e.g., fins, radiators, and/or the like), and/or other elements of the LED lamp **10**. For example, the switch **30** may be located on an exterior surface of the lamp housing **14**. The lamp base **16** may be configured for physically securing the LED lamp **10** into a socket of a lighting device and electrically connecting the driver circuitry **19**, switch control unit **35**, and/or other electrical component of the LED lamp **10** to the socket such that the LED lamp **10** may be electrically powered through the socket. In example embodiments, the lamp base **16** and/or the LED lamp **10** may be the size of a traditional/standard incandescent lamp. For example, the lamp base **16** and/or the LED lamp **10** may be sized according to an A15, A19, A21, A22, B8, B10, C7, C9, C11, C15, F10, F15, F20 and/or traditional/standard lamp size. For example, the lamp base **16** of the LED lamp **10** shown in FIG. **1**A is in accordance with a traditional/standard A19 lamp size. For example, in one embodiment, the length of the LED lamp **10**, a, is 111 mm, the length of the lamp envelope **12**, b, is 43 mm, and the width of the lamp envelope **12**, c, is 59.9 mm or approximately 60 mm. In various embodiments, the size of the LED lamp **10** may vary based as appropriate for the application.

FIG. **3** provides a block wiring diagram of an example LED lamp **10** or LED lighting device **20**. The electrical components of the LED lamp **10** may comprise a switch **30** in electrical communication with a switch control unit **35**. The switch control unit **35** may be in electrical communication with the driver circuitry **19**. In an example embodiment, the switch control unit **35** may be in electrical communication with a driver integrated circuit (IC) **19***a* configured to control, condition, configure and/or the like the electrical current provided to one or more LED packages **18**. The driver circuitry **19** may then provide the configurable electrical current to the one or more LED packages **18**, causing the LED lighting device to be operated according to the mode selected through the switch **30**.

Example LED Lighting Device

FIG. **2** provides a cross section view of an example LED lighting device **20**. The illustrated lighting device **20** is an edge-lit LED flat panel lighting fixture configured to be mounted on a ceiling or wall, suspended as a pendant, and/or the like. In various embodiments, the LED lighting device **20** may be a lighting fixture, a luminaire, a floor lamp, a desk lamp, and/or the like. FIGS. **2**A, **2**C, and **2**E provide a back views of example LED lighting devices **20** that are configured to be flush mounted to a mounting surface (e.g., wall, ceiling, and/or the like). In various embodiments, an example LED lighting device **20** may be flush mounted to a mounting surface, within a recessed lighting receptacle, and/or the like. FIGS. **2**B and **2**D provide front views of the example lighting devices **20** shown in FIGS. **2**A and **2**C, respectively.

In example embodiments, the LED lighting device **20** comprises a device housing **24**, a device lens **22**, one or more LED packages **18**, driver circuitry **19**, a switch control unit **35**, a switch **30**, and/or the like. For example, the device housing **24** may be configured to house the driver circuitry **19**; switch control unit **35**; one or more LED packages **18**; one or more optical elements; one or more heat sink elements; one or more heat dissipation elements; one or more mounting elements configured for mounting the LED lighting device **20** to a ceiling, wall, as a pendant, as a recessed lighting device, and/or the like; one or more stand elements configured for supporting and providing an aesthetic appearance to a luminaire; and/or the like. For example, the switch **30** may be mounted on an exterior surface of the LED lighting device **20**. For example, the switch **30** may be mounted on a back, bottom, or otherwise generally hidden surface of the device housing **24** such that the switch **30** is

not generally viewable by a user when the LED lighting device **20** is in operation. In some embodiments, the switch **30** may be accessible to the user when the LED lighting device **20** is installed. In such embodiments, the switch **30** may still be generally hidden and/or not located where the switch **30** is easily viewable (e.g., the switch **30** is generally not located on the front of the LED lighting device **20**).

In example embodiments the device lens **22** may be transparent, translucent, and/or at least semi-translucent and configured to enclose the optical and/or electrical components of the LED lighting device **20** within the device housing **24**. In example embodiments, the electrical components of the LED lighting device **20** (e.g., the driver circuitry **19**, switch control unit **35**, and/or the like) may be configured to be directly wired to line voltage (e.g., through a junction box) or may be configured to be connected to line voltage through a power cord comprising a two- or three-prong polarized plug.

FIG. **3** provides a block wiring diagram of an example LED lamp **10** or LED lighting device **20**. The electrical components of the LED lighting device **20** may comprise a switch **30** in electrical communication with a switch control unit **35**. The switch control unit **35** may be in electrical communication with the driver circuitry **19**. In an example embodiment, the switch control unit **35** may be in electrical communication with a driver integrated circuit (IC) **19***a* configured to control, condition, configure and/or the like the electrical current provided to one or more LED packages **18**. The driver circuitry **19** may then provide the configurable electrical current to the one or more LED packages **18**, causing the LED lighting device to be operated.

Exemplary LED Packages

In example embodiments, the LED lamp **10** or LED lighting device **20** may comprise one or more LED packages **18**. In example embodiments, an LED package **18** comprises one or more LED chips, electrical contacts, and optionally phosphor (e.g., to cause the LED package to emit white light). The LED package **18** may further comprise encapsulant to protect the one or more LED chips, wire bonds, and the phosphor. In an example embodiment, the LED packages **18** may comprise one or more alternate current (AC) driven LEDs. In some embodiments, the LED package **18** may further comprise one or more optical elements. In example embodiments, the one or more LED packages **18** may comprise two or more LED packages **18**. In example embodiments, the two or more LED packages may comprise at least one first LED package **18***a* and at least one second LED package **18***b*. The first LED package **18***a* may be configured to emit light at a first color temperature and the second LED package **18***b* may be configured to emit light at a second color temperature. The second color temperature may be different from the first color temperature. For example, the first color temperature may be 3000K or 2700K and the second color temperature may be 5000K. In example embodiments, the two or more LED packages **18** may further comprise a third and/or fourth LED package configured to emit light at a third and/or fourth color temperature, respectively, wherein the third and/or fourth color temperature are different from the first and second color temperatures. For example, in various embodiments, one or more of the LED packages **18** may be configured to emit light of at least one of 2700K, 3000K, 3500K, 4000K, 5000K, 5700K, 6000K, 7000K, 7500K and/or other color temperatures, as appropriate for the application. For example, as shown in FIG. **4**A, the LED lamp **10** or LED lighting device may be configured to selectively provide light of color temperature A, B, or C, wherein A, B, and C may be any preset color temperature provided each is different relative to one another

In example embodiments, the two or more LED packages **18** may be in electrical communication with driver circuitry **19** such that the two or more LED packages **18** may be operated by the driver circuitry **19**. For example, the driver circuitry **19** may provide a controlled electrical current to at least one of the LED packages **18**. For example, the driver circuitry **19** may be configured to only operate first LED packages **18***a* to cause the LED lamp **10** or LED lighting device **20** to emit light of the first color temperature. In another example, the driver circuitry **19** may be configured to only operate second LED packages **18***b* to cause the LED lamp **10** or LED lighting device **20** to emit light of the second color temperature. In another example, the driver circuitry **19** may be configured to operate one or more (e.g., half) of the first LED packages **18***a* and one or more (e.g., half) of the second LED packages **18***b* to cause the LED lamp **10** or LED lighting device **20** to emit light of a third color temperature. In example embodiments, the first color temperature, second color temperature, and third color temperature may be different from one another. For example, the first color temperature may be 3000K, the second color temperature may be 5000K, and the third color temperature may be 4000K. In some embodiments, the LED lamp **10** or LED lighting device **20** may comprise LED packages **18** configured to emit light at more than two distinct color temperatures (e.g., three, four, or more distinct color temperatures).

In example embodiments, the one or more LED packages **18** may be configured to provide light that varies in brightness, color temperature, CRI, and/or the like based on the current provided to the one or more LED packages **18** by the driver circuitry **19**. For example, the driver circuitry may provide a particular current to an LED package **18** to cause the LED package **18** to provide light having particular light aspects or qualities.

In example embodiments, the LED packages **18** may comprise one or more LED packages **18** that are configured to emit light other than "white" light. For example, the LED packages **18** may comprise one or more LED packages **18** configured to emit a red or amber light that may be operated to increase the CRI of the light emitted by the LED lamp **10** or LED lighting device **20**.

Example Driver Circuitry

In example embodiments, the driver circuitry **19** may be configured to provide a controlled electrical current to at least one of the LED packages **18** during operation of the LED lighting device **20** or LED lamp **10**. In various embodiments, the driver circuitry **19** may comprise a circuit portion configured to convert AC voltage into DC voltage. In some embodiments, the driver circuitry **19** may comprise a circuit portion configured to control the current flowing through the two or more LED packages **18**. In certain embodiments, the driver circuitry **19** may comprise a circuit portion configured to dim the LED lamp **10** or LED lighting fixture **20**. In various embodiments, additional circuit components may be present in the driver circuitry **19**. Similarly, in various embodiments, all or some of the circuit portions mentioned here may not be present in the driver circuitry **19**. In some embodiments, circuit portions listed herein as separate circuit portions may be combined into one circuit portion. As should be appreciated, a variety of driver circuitry configurations are generally known and understood in the art and any of such may be employed in various embodiments as

suitable for the intended application, without departing from the scope of the present invention.

In example embodiments, the driver circuitry **19** may be configured to operate subsets of the two or more LED packages **18** at a particular given moment in time. For example, if a first color temperature has been selected by a user as the operating color temperature, the driver circuitry **19** may be configured to operate one or more first LED packages **18***a* configured to emit light at the selected first color temperature. If a second color temperature has been selected by the user as the operating color temperature, the driver circuitry **19** may be configured to operate one or more second LED packages **18***b* configured to emit light at the second selected color temperature. If a third color temperature has been selected by the user as the operating color temperature, the driver circuitry **19** may be configured to operate at least a portion of the first LED packages **18***a* (e.g., half of the first LED packages **18***a*) and at least a portion of the second LED packages **18***b* (e.g., half of the second LED packages **18***b*) to provide (e.g., via a combination of the first and second LED packages) a selected third color temperature that is a composite, mixture, or superposition of the first and second color temperatures. The selection of which LED packages **18** are operated by the driver circuitry **19**, when the LED lamp **10** or LED lighting device **20** is operated, is determined by the status of the switch **30** and/or by the switch control unit **35**. For example, the driver circuitry **19** may comprise a plurality of provider circuits **17** configured to provide a controlled electrical current to a subset of the two or more LED packages **18** depending on the selected operating color temperature and/or the status of the switch **30**.

In another example, the driver circuitry **19** may be configured to provide a particular current to one or more of the LED packages **18** to provide light having specific light aspects qualities (e.g., brightness, color temperature, CRI, and/or the like). For example, the driver circuitry **19** may be configured to drive one or more LED packages **18** such that the LED packages provide light having the desired light aspects or qualities. The determination of how one or more of the LED packages **18** should be driven (e.g., what current should be supplied to the LED packages **18**) may be determined by the status of the switch **30** and/or by the switch control unit **35**. Based on the desired light aspects or qualities, different LED packages **18** may be driven differently. For example, LED packages **18** may be driven differently from a red or amber LED package **18** that is being operated to increase the CRI of the light emitted by the LED lamp **10** or LED lighting device **20**. Thus, the provider circuits **17** may be configured to provide various LED packages **18** with a particular configurable current such that the composite light emitted by the LED lamp **10** or LED lighting device **20** has the user desired light aspects or qualities.

For example, in an example embodiment (with reference to FIG. **4**) that allows a user to choose between three different operating color temperature options, the driver circuitry **19** may comprise three distinct provider circuits **17** for providing the controlled electrical current to the at least one of the two or more LED packages **18** for operation. For example, the switch control unit **35** and/or the position of the switch selector **34** may determine which provider circuit **17** is used during the operation of the LED lamp **10** or LED lighting device **20**. Generally, only one of the provider circuits **17** is in use at a given time. For example, a first provider circuit **17** may be configured to provide electrical current to one or more first LED packages **18***a* when the selected operating color temperature is the first color temperature, a second provider circuit **17** may be configured to provide electrical current to one or more second LED packages **18***b* when the selected operating color temperature is the second color temperature, and a third provider circuit **17** may be configured to provide electrical current to at least one first LED package **18***a* and at least one second LED package **18***b* when the selected operating color temperature is the third color temperature. The selection of the operating color temperature may be based at least in part on the status of a switch **30** (e.g., the position of the switch selector **34**) and/or by a switch controller unit **35**.

In example embodiments, various configurations of provider circuits **17** may be applied. For example, as noted above, a provider circuit **17** may be configured to provide electrical current to only the first LED packages **18***a*, only the second LED packages **18***b*, or a predetermined combination of the first and second LED packages **18***a* and **18***b*. For example, a provider circuit **17** may be configured to provide electrical current to half of the first LED packages **18***a* and half of the second LED packages **18***b* to provide light of the third color temperature. In another example, a provider circuit **17** may be configured to provide electrical current to 25% of the first LED packages **18***a* and 75% of the second LED packages **18***b* to provide light of a fourth color temperature. It should be understood that a provider circuit **17** may be configured to provide controlled electrical current to various combinations of the first LED packages **18***a* and the second LED packages **18***b* to provide various color temperature options. Furthermore, in example embodiments, the two or more LED packages **18** may comprise three or more LED packages **18**. For example, the LED packages **18** may comprise at least one first LED package **18***a* configured to emit light at a first color temperature, at least one second LED package **18***b* configured to emit light at a second color temperature, and at least one third LED package configured to emit light at a third color temperature, the first, second, and third color temperatures being different from one another. In such an embodiment, a provider circuit **17** may be configured to provide electrical current to at least one of the first LED packages **18***a*, at least one of the second LED packages **18***b*, and at least one of the third LED packages to provide a three color blend. It should be understood that LED packages configured to emit light at additional color temperatures may be incorporated into the LED lamp **10** or LED lighting device **20** as desired and/or appropriate for the application and that various combinations of the LED packages may be activated to cause the LED lamp **10** or LED lighting device **20** to emit light of a desired operating color temperature.

As noted above, the light aspects or qualities (e.g., brightness, color temperature, CRI, and/or the like) may be controlled by how the one or more LED packages **18** are operated (instead of and/or in addition to which of the LED packages **18** are operated). In example embodiments, one or more configurable qualities of the light emitted by the LED lamp **10** or the LED lighting device **20** may configured by controlling the current provided to one or more of the LED packages **18**. In particular, the driver circuitry **19** may drive the one or more LED packages **18** with a higher or lower current to modify the brightness, color temperature, CRI, and/or the like of the light emitted by the one or more LED packages **18**. In another example, the driver circuitry **19** may increase or decrease the number of LED packages **18** being driven to increase or decrease the brightness of the light emitted by the LED lamp **10** or the LED lighting device **20**. In another example, one or more red or amber LED pack-

ages **18** may be turned on (e.g., electrical current may be supplied thereto by the driver circuitry **19**) to increase the CRI of the light emitted by the LED lamp **10** or LED lighting device **20**. In another example, the primary or secondary optics used to condition the light emitted by the LED lamp **10** or LED lighting device **20**. For example, the optics **13** may be modified, the amount of phosphor through which an LED is emitting may be modified, and/or the like. Thus, in example embodiments, one or more qualities of the light emitted by the LED lamp **10** or LED lighting device **20** may be modified, controlled, configured, and/or the like by changing and/or controlling the amount of current provided to one or more LED packages **18**, which LED packages **18** of the two or more LED packages **18** are being operated, physically changing the primary and/or secondary optics conditioning the light, and/or the like. Thus, for example in an embodiment configured to provide configurable brightness settings or modes, the dimming of the LED lamp **10** or LED lighting device **20** may be controlled by the switch control unit **35** and/or driver circuitry **19** rather than by the externally provided current.

In example embodiments, when the LED lamp **10** or LED lighting device **20** is in a configurable operating mode, interaction with the remote switch **40** (e.g., reception of a signal from the remote switch **40**) may cause the topology of the driver circuitry to be altered. For example, user interaction with the remote switch **40** may cause a signal to be provided to the switch control unit **35**. The switch control unit **35** may then cause a change in the topology of the driver circuitry **19**, thereby causing the driver circuitry **19** to operate a different set of LED packages **18**, drive one or more LED packages **18** with a modified current, and/or the like.

Example Switch

In example embodiments, the LED lamp **10** and/or LED lighting device **20** comprises a switch **30**. In example embodiments, the switch **30** may be configured to allow a user to select an operating mode (e.g., a programmable custom mode, a set mode, or a configurable mode). One or more aspects or qualities of the light (e.g., color temperature, brightness, CRI, and/or the like) emitted by the LED lamp **10** and/or LED lighting device **20** may then be controlled based on the user-selected operating mode. In example embodiments, the switch **30** may be a mechanical switch, electro-mechanical switch, an infrared switch, and/or the like. For example, if the switch **30** is a mechanical switch, the switch **30** may comprise a slide switch, a dial, a set of binary switches, and/or the like. In an example embodiments, the switch **30**, and/or a user interface thereof, may be disposed on an exterior surface of the lamp housing **14** or the device housing **24**. FIGS. **3** and **3**A provide block diagrams of at least some of the electrical components of an LED lamp **10** or LED lighting device **20**, including a switch **30** and a switch control unit **35**, in accordance with example embodiments of the present invention. In example embodiments, the switch **30** may comprise a plurality of switch positions **32** (e.g., **32***a*, **32***b*, **32***c*, **32***d*), switch position indicators **33** (e.g., **33***a*, **33***b*, **33***c*, **33***d*), and a switch selector **34**. For example, the switch **30** may comprise four switch positions **32***a*, **32***b*, **32***c*, and **32***d*, in example embodiments. In other embodiments, the switch **30** may comprise more than four switch positions **32** (e.g., **32***a*, **32***b*, **32***c*, **32***d*). For example, in various embodiments, the switch **30** may comprise two, three, four, five, six, seven, eight, or more switch positions with each switch position corresponding to either a set operating mode, a selectively configurable operating mode, or a programmable custom operating mode. One of the switch positions may correspond to a configurable operating mode (e.g., a configurable operating color temperature mode, configurable brightness mode, configurable brightness-color temperature mode, etc.) and the remaining switch positions may correspond to set operating modes (e.g., set operating color temperature modes, set brightness modes, set operating brightness-color temperature modes, etc.) wherein the different switch positions select the particular set light aspects or qualities (e.g., brightness, operating color temperature, CRI, and/or the like). For example, switch positions **32***a*, **32***b*, and **32***c* may correspond to set operating color temperature modes with each position corresponding to a particular set operating color temperature. The switch position **32***d* may correspond to a configurable operating color temperature mode.

In some embodiments, the switch **30** may provide the user with one or more programmable custom operating modes. In an example embodiment, the switch **30** may comprise a custom set operating color temperature mode, in which a user may define and/or select a predefined mixture of the first, second, third, and/or the like operating color temperatures such that the LED lamp **10** or LED lighting device **20** provides a light at the custom set operating color temperature. In another example, the switch **30** may comprise a custom program operating brightness-color temperature operating mode such that the LED lamp **10** or LED lighting device **20** provides light at a custom set operating color temperature at a set brightness. In another example, the switch **30** may comprise a custom program operating mode wherein the switch control unit **35** is configured to cause the operating color temperature, brightness, and/or CRI to change at configurable times (e.g., clock time) or at configurable periods of time. For example, a user may wish to have the LED lamp **10** or LED lighting device **20** operate at one operating color temperature during the morning hours, another operating color temperature during the afternoon, and another operating color temperature in the evening or night time hours. In another example, a user may want the LED lamp **10** or LED lighting device **20** to operate at one operating color temperature, brightness, and/or CRI for the first twenty minutes the LED lamp **10** or LED lighting device **20** is operating and then to operate at another operating color temperature, brightness, and/or CRI for the next three hours or for as long as the LED lamp **10** or LED lighting device **20** remains in constant operation. In example embodiments having programmable custom operating mode options, additional user interface components (e.g., in addition to the switch **30**) may be provided for the programming of the programmable custom operating mode. The additional user interface components may be located on the housing **14**, **24** of the LED lamp **10** or LED lighting device **20** and/or on a remote switch **40** (e.g., through a mobile computing entity **40'** user interface, wherein the computing entity **40'** is executing an application causing the computing entity **40'** to operate as a remote switch **40**). In example embodiments, such additional user interface components may comprise various switches, dials, displays, touchscreen displays, buttons, knobs, and/or the like as commonly understood in the art.

A switch position indicator **33** (e.g., **33***a*, **33***b*, **33***c*, **33***d*) may correspond to each switch position **32** (e.g., **32***a*, **32***b*, **32***c*, **32***d*). The switch position indicator **33** (e.g., **33***a*, **33***b*, **33***c*, **33***d*) may be configured to indicate the operating mode (e.g., color temperature and/or option or mode, etc.) selected by placing the switch selector **34** in the corresponding switch position. For example, switch position indicator **33***a* may show approximately where the switch position **32***a* is

located and may indicate the color temperature and/or option or mode selected by placing the switch selector **34** in switch position **32***a*. For example, the switch position indicator **33***a* indicates that if the switch selector **34** is placed in the switch position **32***a*, a set operating color temperature mode is selected with the set operating color temperature being 3000K. Similarly, the switch position indicator **33***b* indicates that if the switch selector **34** is placed in the switch position **32***b*, a set operating color temperature mode is selected with the set operating color temperature being 4000K; the switch position indicator **33***c* indicates that if the switch selector **34** is placed in the switch position **32***c*, a set operating color temperature mode is selected with the set operating color temperature being 5000K; and the switch position indicator **33***d* indicates that if the switch selector **34** is placed in the switch position **32***d*, the configurable operating color temperature mode is selected. For example, if the switch selector **34** is placed in switch position **34***d*, the operating color temperature of the LED lamp **10** or LED lighting device **20** may be configurable by using a wall switch, remote control, and/or the like (e.g., remote switch **40** shown in FIG. **5**). In another example, as shown in FIG. **4**A, the switch position indicator **33***a* indicates that if the switch selector **34** is placed in the switch position **32***a*, a set operating mode is selected with the set light aspects or qualities being A; the switch position indicator **33***b* indicates that if the switch selector **34** is placed in the switch position **32***b*, a set operating mode is selected with the set light aspects or qualities being B; the switch position indicator **33***c* indicates that if the switch selector **34** is placed in the switch position **32***c*, a set operating mode is selected with the set light aspects or qualities being C; and the switch position indicator **33***d* indicates that if the switch selector **34** is placed in the switch position **32***d*, the configurable operating is selected wherein a user may use a remote switch **40** to toggle between A, B, and C, wherein A, B, and C may be operating states of any preset color temperature, brightness, CRI, and/or the like, provided each operating state is different in at least one light aspect or quality relative to one another. The status of the switch **30** is determined by the switch position **32** (e.g. **32***a*, **32***b*, **32***c*, **32***d*) in which the switch selector **34** is positioned. The switch **30** has been illustrated herein as slider switch. It should be understood however, that the switch **30** may take a variety of forms as appropriate for the application. For example, FIG. **2**E illustrates an example switch **30** having a multiple position pivot switch selector **34'** having switch positions that are selected based on the angle of the pivot switch selector **34'**.

In example embodiments, a user may change the operating light aspects or qualities (e.g., operating color temperature, brightness, CRI, and/or the like) of the LED lamp **10** or LED lighting device **20** by changing the positions of the switch selector **34**. For example, in various embodiments, the user may change the position of the switch selector **34** while the LED lamp **10** or LED lighting device **20** before installation of the LED lamp **10** or LED lighting device **20**, after installation of the LED lamp **10** or LED lighting device **20** but when the LED lamp **10** or LED lighting device **20** is not in use (e.g., is turned off and not emitting light), or while the LED lamp **10** or LED lighting device **20** is in use (e.g., is turned on and is emitting light). In example embodiments, if the position of the switch selector **34** is changed while the LED lamp **10** or LED lighting device **20** is in use, causing the light aspects or qualities thereof to change, the change of the light aspects or qualities may occur within two seconds of the position of the switch selector **34** being changed.

In an example embodiment, a user-selection switch **31** (e.g., a toggle switch, button, and/or the like) may be disposed on the LED lamp **10** or LED lighting device **20** such that user-selection may be received through user-selection switch at the LED lamp **10** or LED lighting device **20**. Thus, the user may change the operating light aspects or qualities of the LED lamp **10** or LED lighting device **20** when the LED lamp **10** or LED lighting device **20** is in a configurable operating mode by interacting with the user-selection switch **31** rather than by using the remote switch **40**.

Example Switch Control Unit

In example embodiments, the LED lamp **10** or LED lighting device **20** may comprise a switch control unit **35**. In example embodiments, the switch control unit **35** may be configured to cause the driver circuitry **19** to operate one or more LED packages **18** in accordance with the user-selected operating mode (e.g., a programmable custom mode, a set mode, or a configurable mode). In example embodiments, the switch control unit **35** may be a microcontroller unit (MCU). For example, the switch control unit **35** may comprise a single integrated circuit. In example embodiments, the switch control unit **35** comprises one or more processing elements **37**, one or more memory elements **36**, and/or one or more communication interface elements **38**. In example embodiments, the switch control unit **35** may be in wired (e.g., hard-wired) communication with the switch **30** and/or configured to receive signals from the remote switch **40**. In example embodiments, the switch control unit **35** may be configured to cause one or more operating light aspects or qualities (e.g., operating color temperature, brightness, CRI) of the LED lamp **10** or the LED lighting device **20** to be modified based on a received signal from the remote switch **40**, store information/data identifying the last light aspects or qualities at which the LED lamp **10** or the LED lighting device **20** was operated at, and/or the like. For example, the switch control unit **35** may be configured to receive user selection of a programmable custom operating mode and control the LED lamp **10** or the LED lighting device **20** to operate in accordance with the programmable custom operating mode or other user-selected operating mode (e.g., set operating mode or configurable operating mode).

In example embodiments, the one or more processing elements **37** (also referred to as processors, processing circuitry, processing device, and/or similar terms used herein interchangeably) that communicate with other elements within the switch control unit **35**. For example, the processing element(s) **37** may communicate with the memory element(s) **36**, communication interface element(s) **38**, and/or components of the driver circuitry **19** via direct electrical connection, a bus, and/or the like. For example, the processing element(s) **37** may be configured to process input received through the switch **30** (and/or additional user interface components), process a signal received from the remote switch **40** (e.g., through the communication interface element **38**), cause the memory element **36** to store a current operating color temperature, cause one provider circuit **17** to be activated (e.g., to provide a controlled electric current to the corresponding at least one LED package **18**), cause another provider circuit **17** to be de-activated (e.g., to stop providing an electric current to the corresponding at least one LED package **18**), cause a different and/or modified current to be provided to the provider circuit **17** (e.g., such that the LED package **18** is driven in a modified manner by the provider circuit **17**) and/or the like. As will be understood, the processing element **37** may be embodied in a number of different ways. For example, the processing

element **37** may be embodied as one or more complex programmable logic devices (CPLDs), microprocessors, multi-core processors, co-processing entities, application-specific instruction-set processors (ASIPs), microcontrollers, and/or controllers. Further, the processing element **37** may be embodied as one or more other processing devices or circuitry. The term circuitry may refer to an entirely hardware embodiment or a combination of hardware and computer program products. Thus, the processing element **37** may be embodied as integrated circuits, application specific integrated circuits (ASICs), field programmable gate arrays (FPGAs), programmable logic arrays (PLAs), hardware accelerators, other circuitry, and/or the like. As will therefore be understood, the processing element **37** may be configured for a particular use or configured to execute instructions stored in volatile or non-volatile media or otherwise accessible to the processing element **37**. As such, whether configured by hardware or computer program products, or by a combination thereof, the processing element **37** may be capable of performing steps or operations according to embodiments of the present invention when configured accordingly.

The memory element(s) **36** may be non-transitory and may include, for example, one or more volatile and/or non-volatile memories. In other words, for example, the memory element **36** may be an electronic storage device (e.g., a computer readable storage medium) comprising gates configured to store data (e.g., bits) that may be retrievable by a machine (e.g., a computing device like the processing element **37**). The memory element **36** may be configured to store information, data, content, applications, instructions, or the like for enabling the switch control unit **35** to carry out various functions in accordance with an example embodiment of the present invention. For example, the memory element **35** could be configured to buffer input data for processing by the processing element **37** (e.g., a signal received from the remote switch **40**). In example embodiments, the memory element **36** may be configured to store a most recent operating light aspects or qualities (e.g., color temperature, brightness, CRI, and/or the like, and/or combination thereof). Additionally or alternatively, the memory element **36** could be configured to store instructions for execution by the processing element **37**.

As indicated, in one embodiment, the switch control unit **35** may also include one or more communications interface elements **38** for communicating with the remote switch **40**. For example, the communications interface element **38** may be configured to receive a signal from the remote switch **40** indicating user selection of, activation of, and/or interaction with an on/off or power button, a dimmer switch, or a remote selector switch configured to select or modify the operating color temperature of the LED lamp **10** or LED lighting device **20**, and/or the like. Such communication may be executed using a wired data transmission protocol, such as fiber distributed data interface (FDDI), digital subscriber line (DSL), Ethernet, asynchronous transfer mode (ATM), frame relay, data over cable service interface specification (DOCSIS), or any other wired transmission protocol. Similarly, the communications interface element **38** may be configured to communicate via a wireless communication technology, such as a short range communication technology. For example, the communications interface element **38** may be configured to receive and/or send signals using IEEE 802.11 (Wi-Fi), Wi-Fi Direct, 802.16 (WiMAX), ultra wideband (UWB), infrared (IR) protocols, near field communication (NFC) protocols, Wibree, Bluetooth protocols, wireless universal serial bus (USB) protocols, and/or any other wireless protocol.

In example embodiments, the switch control unit **35** may be configured to cause the LED lamp **10** or LED lighting device **20** to operate at the operating color temperature, brightness, CRI, and/or other particular light aspect or quality, when the LED lamp **10** or LED lighting device **20** is turned on. For example, the switch control unit **35** may be configured to determine the status of the switch **30** and operate the LED lamp **10** or LED lighting device **20** accordingly. For example, the switch control unit **35** may be configured to determine if the position of the switch selector **34** is a position corresponding to a set operating mode, to the position corresponding to the configurable operating mode, and/or to a position corresponding to a programmable custom operating mode. If the switch selector **34** is in a switch position **32** (e.g., **32***a*, **32***b*, **32***c*) corresponding to a set operating mode, the switch control unit **35** (e.g., the processing element **37**) may determine the corresponding color temperature (and/or other light aspects or qualities) and cause the LED lamp **10** or LED lighting device **20** to operate at the corresponding color temperature (and/or other light aspects or qualities). For example, if the switch control unit **35** determines that the switch selector **34** is in switch position **32***a*, the switch control unit **35** may then determine that the corresponding color temperature is 3000K and cause the LED lamp **10** or LED lighting device **20** to be operated at 3000K. For example, if the switch control unit **34** determines that the switch selector **34** is in the switch position **32***a*, the switch control unit **35** may cause the provider circuit **17** corresponding to the switch position **32***a* to provide a controlled current to at least one of the two or more LED packages **18**.

If the switch control unit **35** determines that the status of the switch **30** places the LED lamp **10** or LED lighting device **20** in the configurable operating mode, the switch control unit **35** may cause the LED lamp **10** or LED lighting device **20** to be operated at light aspects or qualities indicated by the last received signal from the remote switch **40**. For example, the memory element **36** may store an indication of the last received signal from the remote switch **40**, a current/most recently used operating color temperature, brightness, and/or CRI indicator, and/or the like such that the LED lamp **10** or the lighting device **20** may be operated at the most recently user-selected light aspects or qualities. In another example, if the switch control unit **35** determines that the status of the switch **30** places the LED lamp **10** or LED lighting device **20** in a programmable custom operating mode, the switch control unit **35** may operate the LED lamp **10** or LED lighting device **20** accordingly (e.g., based on a stored custom operating program stored in memory element **36**, and/or the like).

In example embodiments, if the status of the switch **30** corresponds to a set operating mode (e.g., a set operating color temperature, brightness, CRI, and/or the like), the switch controller unit **35** may be bypassed. For example, if the switch selector **34** is in switch position corresponding to a set operating color temperature and/or the like (e.g., **32***a*, **32***b*, or **32***c*), the position of the switch selector **34** may cause the appropriate provider circuit **17** to be activated when the LED lamp **10** or lighting device **20** is turned on. For example, the switch position(s) corresponding to a set operating light aspects or qualities may be in direct electrical communication with the corresponding provider circuit **17** such that placement of the switch selector **34** into that switch position causes the corresponding provider circuit **17** to be

completed or activated (e.g., when the LED lamp **10** or lighting device **20** is turned on). Thus, in some example embodiments, the switch control unit **35** may not be powered and/or engaged in the operation of the LED lamp **10** or lighting device **20** unless the status of the switch **30** corresponds to a configurable and/or custom programmable mode. In some embodiments, a set operating mode may set one or more light aspects or qualities, while allowing one or more other light aspects or qualities to be configured. For example, a set operating mode may set the operating color temperature and CRI of the LED lamp **10** or lighting device **20** but allow the brightness to be modified. In another example, a set operating mode may set the operating color and brightness of the LED lamp **10** or lighting device **20** but allow the CRI to be modified. For example, in some example embodiments, if the status of the switch **30** corresponds to a set operating color temperature mode, the switch control unit **35** may only be used to receive and process signals from the remote switch **40** and cause corresponding actions related to turning the LED lamp **10** or lighting device **20** on or off, dimming the LED lamp **10** or lighting device **20**, modifying the CRI of the LED lamp **10** or lighting device **20**, and/or the like. For example, if the switch control unit **35** receives a signal attempting to change the operating color of the LED lamp **10** or lighting device **20** while the LED lamp **10** or lighting device **20** is in a set operating color temperature mode, the switch control unit **35** need not determine if the LED lamp **10** or lighting device **20** is in a set operating color temperature mode or the configurable operating color temperature mode as the switch control unit **35** cannot affect the circuit connection caused by the position of the switch selector **34**.

Example Remote Switch

Example embodiments of the present invention comprise a remote switch **40**. In example embodiments, a remote switch **40** may be a wall mounted switch mounted in the same room as the LED lamp **10** or LED lighting device **20** and/or within a short range communication technology range of the LED lamp **10** or LED lighting device **20**. For example, the remote switch **40** may be a wall and/or junction box mounted toggle switch, dimmer switch and/or the like in wired communication with the switch control unit **35**. In another example, the remote switch **40** may be a handheld device (e.g., a remote control, or computing entity **40'**) that is within the same room as the LED lamp **10** or LED lighting device **20**, within a short range communication technology range of the LED lamp **10** or LED lighting device **20**, in communication with the switch control unit **35** through a wireless network, and/or the like. In example embodiments, the remote switch **40** may be in wired or wireless communication with the switch control unit **35**. For example, the remote switch **40** may be configured to control the operation of the LED lamp **10** or lighting device **20** or aspects thereof by providing a signal to the switch control unit **35** indicating user selection, interaction, and/or the like with one or more interactive elements of the remote switch **40**. For example, the remote switch **40** may be configured to allow a user to toggle through two or more operating color temperatures, brightness, CRIs, and/or other light aspects or qualities of the LED lamp **10** or LED lighting device **20**. In example embodiments, the toggling of the remote switch **40** to change or modify the operating light aspects or qualities could be at any time interval from 1 ms to 1 min.

For example, the remote switch **40** may be configured to cause the LED lamp **10** or lighting device **20** to turn on or off, control the brightness of the LED lamp **10** or lighting device **20** (e.g., through a dimmer switch), change the operating light aspects or qualities of the LED lamp **10** or lighting device **20**, program a programmable custom operating mode, and/or the like. An example remote switch **40** is illustrated in FIG. **5**. In example embodiments, the remote switch **40** comprises one or more interactive elements (e.g., **42**, **44**). For example, the remote switch **40** may comprise an on/off and/or dimmer switch **42** configured to turn the LED lamp **10** (e.g., the lighting device that the LED lamp **10** is secured within) or LED lighting device **20** on or off and/or control the brightness of the LED lamp **10** or the LED lighting device **20**. The remote switch **40** may comprise a remote selector **44** (e.g., a color temperature control) configured for remotely selecting an operating color temperature of the LED lamp **10** or lighting device **20** when the LED lamp **10** or LED lighting device **20** is in the configurable operating mode wherein the operating color temperature may be toggled between color temperature A, color temperature B, and color temperature C. For example, a user may select the remote selector **44** to cause the operating color temperature of the LED lamp **10** or lighting device **20** to change from color temperature A to color temperature B, from color temperature B to color temperature C, or from color temperature C to color temperature A. In another example, the remote selector **44** may comprise a button and/or the like for each of the first, second, and third color temperatures and the user may select, press, interact with, and/or the like the button corresponding to the desired color temperatures. In another example, the remote selector **44** may comprise a switch or dial having a switch or dial position corresponding to each of selectable color temperatures. In example embodiments, the remote selector **44** may be a slide, push button, rotary, passive infrared and/or other type of interactive element that the user may interact with, select, press, touch, voice activate, and/or the like. Thus, the remote selector **44** may be configured to allow a user to select a desired operating color temperature, brightness, CRI, and/or other operating light aspects or qualities, and/or a combination thereof during operation of the LED lamp **10** or LED lighting device **20** (e.g., when the LED lamp **10** or LED lighting device **20** is in the configurable operating mode). In example embodiments, the remote switch **40** may comprise additional user interface components as appropriate for the application.

The remote switch **40** may further comprise a communication interface **48**. In example embodiments, the communication interface **48** may be a part of a control unit that is similar to the switch control unit **35** (e.g., the control unit may comprise a processing element and/or memory element in addition to the communication interface **48**). In example embodiments, the communication interface **48** is configured to provide a signal to the communication interface element **38** indicating user selection and/or interaction with the on/off and/or dimmer switch **42**, the remote selector **44**, and/or the like.

For example, the communications interface **48** may be configured to communicate with the switch control unit **35**. For example, the communications interface **48** may be configured to provide a signal to the communications interface element **38** indicating user selection of, activation of, and/or interaction with an on/off and/or dimmer switch **42**, remote selector **44**, and/or the like. Such communication may be executed using a wired data transmission protocol, such as fiber distributed data interface (FDDI), digital subscriber line (DSL), Ethernet, asynchronous transfer mode (ATM), frame relay, data over cable service interface specification (DOC SIS), or any other wired transmission protocol. Similarly, the communications interface **48** may be

configured to communicate via a wireless communication technology, such as a short range communication technology. For example, the communications interface **48** may be configured to receive and/or send signals using IEEE 802.11 (Wi-Fi), Wi-Fi Direct, 802.16 (WiMAX), ultra wideband (UWB), infrared (IR) protocols, near field communication (NFC) protocols, Wibree, Bluetooth protocols, wireless universal serial bus (USB) protocols, and/or any other wireless protocol.

Example Computing Device Used as a Remote Switch

FIG. **6** provides an illustrative schematic representative of a computing entity **40'** that can be used in conjunction with embodiments of the present invention. In particular, the computing entity **40'** may be configured to operate and/or execute an application configured to cause the computing entity **40'** to act as a remote switch **40**. For example, the computing entity **40'** may operate and/or execute an application configured to communicate with the switch control unit **35** and/or cause one or more aspects (e.g., brightness, CRI, color temperature, and/or the like and/or a combination thereof) of light emitted by the LED lamp **10** or LED lighting device **20** to be modified. In example embodiments, the computing entity **40'** may be a mobile computing entity such as a mobile phone, tablet, phablet, wearable computing device, personal digital assistant (PDA), MP3 player, and/or the like.

As shown in FIG. **6**, a computing entity **40'** can include an antenna **412**, a transmitter **404** (e.g., radio), a receiver **406** (e.g., radio), and a processing element **408** that provides signals to and receives signals from the transmitter **404** and receiver **406**, respectively. The signals provided to and received from the transmitter **404** and the receiver **406**, respectively, may include signaling information/data in accordance with an air interface standard of applicable wireless systems to communicate with various entities, such as switch control unit **35**, another computing entity **40'**, and/or the like. In this regard, the computing entity **40'** may be capable of operating with one or more air interface standards, communication protocols, modulation types, and access types. More particularly, the computing entity **40'** may operate in accordance with any of a number of wireless communication standards and protocols. In a particular embodiment, the computing device **40'** may operate in accordance with multiple wireless communication standards and protocols, such as GPRS, UMTS, CDMA2000, 1×RTT, WCDMA, TD-SCDMA, LTE, E-UTRAN, EVDO, HSPA, HSDPA, Wi-Fi, WiMAX, UWB, IR protocols, Bluetooth protocols, USB protocols, and/or any other wireless protocol.

Via these communication standards and protocols, the computing entity **40'** can communicate with various other entities using concepts such as Unstructured Supplementary Service information/data (USSD), Short Message Service (SMS), Multimedia Messaging Service (MMS), Dual-Tone Multi-Frequency Signaling (DTMF), and/or Subscriber Identity Module Dialer (SIM dialer). The computing entity **40'** can also download changes, add-ons, and updates, for instance, to its firmware, software (e.g., including executable instructions, applications, program modules), and operating system.

According to one embodiment, the computing entity **40'** may include location determining aspects, devices, modules, functionalities, and/or similar words used herein interchangeably. For example, the computing entity **40'** may include outdoor positioning aspects, such as a location module adapted to acquire, for example, latitude, longitude, altitude, geocode, course, direction, heading, speed, UTC, date, and/or various other information/data. In one embodiment, the location module can acquire data, sometimes known as ephemeris data, by identifying the number of satellites in view and the relative positions of those satellites. The satellites may be a variety of different satellites, including LEO satellite systems, DOD satellite systems, the European Union Galileo positioning systems, the Chinese Compass navigation systems, Indian Regional Navigational satellite systems, and/or the like. Alternatively, the location information/data may be determined by triangulating the computing entity's **40'** position in connection with a variety of other systems, including cellular towers, Wi-Fi access points, and/or the like. Similarly, the computing entity **40'** may include indoor positioning aspects, such as a location module adapted to acquire, for example, latitude, longitude, altitude, geocode, course, direction, heading, speed, time, date, and/or various other information/data. Some of the indoor aspects may use various position or location technologies including RFID tags, indoor beacons or transmitters, Wi-Fi access points, cellular towers, nearby computing devices (e.g., smartphones, laptops) and/or the like. For instance, such technologies may include iBeacons, Gimbal proximity beacons, BLE transmitters, Near Field Communication (NFC) transmitters, and/or the like. These indoor positioning aspects can be used in a variety of settings to determine the location of someone or something to within inches or centimeters.

The computing entity **40'** may also comprise a user interface (that can include a display **416** coupled to a processing element **408**) and/or a user input interface (coupled to a processing element **408**). For example, the user interface may be an application, browser, user interface, dashboard, webpage, and/or similar words used herein interchangeably executing on and/or accessible via the computing entity **40'** to interact with and/or cause display of information. The user input interface can comprise any of a number of devices allowing the computing entity **40'** to receive data, such as a keypad **418** (hard or soft), a touch display, voice/speech or motion interfaces, scanners, readers, or other input device. In embodiments including a keypad **418**, the keypad **418** can include (or cause display of) the conventional numeric (0-9) and related keys (#, *), and other keys used for operating the computing entity **40'** and may include a full set of alphabetic keys or set of keys that may be activated to provide a full set of alphanumeric keys. In addition to providing input, the user input interface can be used, for example, to activate or deactivate certain functions, such as screen savers and/or sleep modes. Through such inputs the computing entity **40'** can collect contextual information/data as part of the telematics data.

The computing entity **40'** can also include volatile storage or memory **422** and/or non-volatile storage or memory **424**, which can be embedded and/or may be removable. For example, the non-volatile memory may be ROM, PROM, EPROM, EEPROM, flash memory, MMCs, SD memory cards, Memory Sticks, CBRAM, PRAM, FeRAM, RRAM, SONOS, racetrack memory, and/or the like. The volatile memory may be RAM, DRAM, SRAM, FPM DRAM, EDO DRAM, SDRAM, DDR SDRAM, DDR2 SDRAM, DDR3 SDRAM, RDRAM, RIMM, DIMM, SIMM, VRAM, cache memory, register memory, and/or the like. The volatile and non-volatile storage or memory can store databases, database instances, database management system entities, data, applications, programs, program modules, scripts, source code, object code, byte code, compiled code, interpreted code, machine code, executable instructions, and/or the like to implement the functions of the computing entity **40'**.

Example Method of Operating an LED Lamp or LED Lighting Device

FIG. **7** provides a flowchart illustrating processes and procedures for an example method for operating an LED lamp **10** or LED lighting device **20**. Starting at block **102**, a user uses the switch **30** to select the preferred operation mode for the LED lamp **10** or LED lighting device **20**. For example, the user may place the switch selector **34** in the desired switch position **32** (e.g., **32***a*, **32***b*, **32***c*, **32***d*). For example, the switch **30** may be used to select one of the set operating modes or the configurable operating mode. In an example embodiment, the switch **30** may be used to select a programmable custom operating mode.

At block **104**, the LED lamp **10** or LED lighting device **20** may be installed. For example, the LED lamp **10** may be secured within a socket of a lighting device. In another example, the LED lighting device **20** may be put into electrical connection with line voltage by plugging a two- or three-prong polarized plug into a wall receptacle and the LED lighting device **20** may be placed in a desired position. In another example, the LED lighting device **20** may be electrically connected to line voltage by connecting wires of the LED lighting device **20** to line voltage wires of a junction box and mounting the LED lighting device **20** to a ceiling, wall, and/or the like.

At some time after the LED lamp **10** or LED lighting device **20** is installed, the LED lamp **10** or lighting device **20** is turned on, at block **112**. For example, a user may turn on the LED lamp **10** or LED lighting device **20** by interacting with, selecting, pressing, and/or the like an on/off or power button, switch, and/or the like. For example, the user may interact with, select, press, and/or the like the on/off and/or dimmer switch **42** on the remote switch **40**, the remote switch **40** may provide an on/off signal to the switch control unit **35**, and the switch control unit **35** may cause the LED lamp **10** or LED lighting device **20** to turn on.

At block **114**, it may be determined if the LED lamp **10** or LED lighting device **20** is in a set operating mode. For example it may be determined if the switch **30** was set in a position indicating that the LED lamp **10** or LED lighting device **20** is to be operated in a set operating mode (e.g., with set light aspects or qualities). For example, the switch controller unit **35** (e.g., the processing element **37**) may determine if the LED lamp **10** or LED lighting device **20** is in a set operating mode. In some embodiments, determining if the LED lamp **10** or LED lighting device **20** is in a set operating mode does not require an active determination. For example, the switch **30** may be wired such that if the switch selector **34** is in set operating mode switch position, the switch control unit **35** may be bypassed and the provider circuit **17** corresponding to the selected set operating light aspects or qualities may be activated, completed, and/or the like causing the LED lamp **10** or LED lighting device **20** to be operated at the set operating light aspects or qualities.

If, at block **114**, it is determined that the LED lamp **10** or LED lighting device **20** is in a set operating mode, the LED lamp **10** or LED lighting device **20** is operated at the set operating light aspects or qualities (e.g., color temperature, brightness, CRI, and/or the like), at block **116**. For example, the driver circuitry **19** may operate at least one of the two or more LED packages **18** to cause the LED lamp **10** or LED lighting device **20** to emit light at the set operating color temperature.

If, at block **114**, it is determined that the LED lamp **10** or LED lighting device **20** is not in a set operating mode, the process continues to block **118**. At block **118**, the color temperature that the LED lamp **10** or LED lighting device **20** was last operated at is identified. For example, the switch control unit **35** (e.g., the processing element **37**, memory element **36**, and/or the like) may identify the color temperature, brightness, CRI, and/or the like that the LED lamp **10** or LED lighting device **20** was last operated at. For example, the memory element **36** may store the most recent operating color temperature, brightness, CRI, and/or the like (and/or an indicator thereof), which may be used to identify the light aspects or qualities that the LED lamp **10** or LED lighting device **20** was last operated at. For example, the identified color temperature is applied or implemented as the operating color temperature.

At block **120**, the LED lamp **10** or LED lighting device **20** is operated to provide light having the determined or identified light aspects or qualities. For example, the switch control unit **35** may cause the driver circuitry **19** to operate the LED lamp **10** or LED lighting device **20** at the operating light aspects or qualities (e.g., color temperature, brightness, CRI, and/or the like, and/or a combination thereof). For example, the driver circuitry **19** may operate at least one of the two or more LED packages **18** to cause the LED lamp **10** or LED lighting device **20** to emit light at the operating light aspects or qualities. For example, the driver circuitry **19** may operate a specific set of LED packages **18** to cause the LED lamp **10** or LED lighting device **20** to emit light at the operating color temperature (and/or brightness and/or CRI). In another example, the driver circuitry **19** may drive one or more LED packages **18** such that the LED lamp **10** or LED lighting device **20** emits light at the operating color temperature (and/or brightness and/or CRI). In yet another example, the switch control unit **35** may adjust one or more optical elements to cause the LED lamp **10** or LED lighting device **20** to emit light at the operating color temperature (and/or brightness and/or CRI).

At block **122**, it is determined if a light aspect or quality change signal is received. For example, the switch control unit **35** may determine if a light aspect or quality change signal is received from the remote switch **40**. For example, the signal may indicate user selection of the color selector **44**, indicating the user would like to change the operating color temperature of the LED lamp **10** or the LED lighting device **20**. For example, it is determined if a light aspect or quality change signal is received by the communication interface element **38**. If, at block **122**, it is determined that a light aspect or quality change signal is not received, the process returns to block **120**.

If, at block **122**, it is determined that a light aspect or quality change signal has been received, one or more operating light aspects or qualities of the LED lamp **10** or LED lighting device **20** are modified accordingly. For example, the switch control unit **35** may activate a provider circuit **17** corresponding to the modified operating color temperature (and/or brightness and/or CRI, and/or the like) and may de-activate the previously activated provider circuit **17** corresponding to the previous operating color temperature (and/or brightness and/or CRI, and/or the like). For example, the switch control unit **35** may cause one provider circuit **17** to provide a controlled electric current to the corresponding at least one LED package **18** such that the LED lamp **10** or LED lighting device **20** emits light having the modified operating light aspects or qualities and cause another provider circuit **17** to stop providing an electric current to the corresponding at least one LED package **18** corresponding to the previous operating light aspect or qualities. For example, the memory element **36** may be updated to indicate the new most recent operating light aspects or qualities. In example embodiments, the switch control unit **35** and/or

driver circuitry **19** are configured to start operating the at least one of the two or more LED packages **18** at the modified operating light aspects or qualities within two seconds or less of the receipt of the signal indicating user-selection of the modified operating light aspects or qualities. After the one or more operating light aspects or qualities are modified, the process returns to block **120**.

Alternative Example Method of Operating an LED Lamp or LED Lighting Device

FIG. **8** provides a flowchart illustrating processes and procedures for an alternative method for operating an LED lamp **10** or LED lighting device **20**. Starting at block **202**, a user uses the switch **30** to select the preferred operation mode for the LED lamp **10** or LED lighting device **20**. For example, the user may place the switch selector **34** in the desired switch position **32** (e.g., **32***a*, **32***b*, **32***c*, **32***d*). For example, the switch **30** may be used to select one of the set operating modes or the configurable operating mode. In an example embodiment, the switch **30** may be used to select a programmable custom operating mode.

At block **204**, the LED lamp **10** or LED lighting device **20** may be installed. For example, the LED lamp **10** may be secured within a socket of a lighting device. In another example, the LED lighting device **20** may be put into electrical connection with line voltage by plugging a two- or three-prong polarized plug into a wall receptacle and the LED lighting device **20** may be placed in a desired position. In another example, the LED lighting device **20** may be electrically connected to line voltage by connecting wires of the LED lighting device **20** to line voltage wires of a junction box and mounting the LED lighting device **20** to a ceiling, wall, and/or the like. In yet another example, a wiring harness terminating in a standard size lamp base connector may be secured into the socket of a recessed lighting fixture. The LED lighting device **20** may then be placed, mounted, installed, and/or the like in a desired position.

At some time after the LED lamp **10** or LED lighting device **20** is installed, the LED lamp **10** or lighting device **20** is turned on, at block **212**. For example, a user may turn on the LED lamp **10** or lighting device **20** by interacting with, selecting, pressing, and/or the like an on/off or power button, switch, and/or the like. For example, the user may interact with, select, press, and/or the like the on/off and/or dimmer switch **42** on the remote switch **40**, the remote switch **40** may provide an on/off signal to the switch control unit **35**, and the switch control unit **35** may cause the LED lamp **10** or LED lighting device **20** to turn on.

At block **214**, the color temperature that the LED lamp **10** or LED lighting device **20** was last operated at is identified. For example, the switch control unit **35** (e.g., the processing element **37**, memory element **36**, and/or the like) may identify the color temperature that the LED lamp **10** or LED lighting device **20** was last operated at. For example, the memory element **36** may store the most recent operating light aspects or qualities, which may be used to identify the color temperature, brightness, CRI, and/or the like that the LED lamp **10** or LED lighting device **20** was last operated at. For example, the identified light aspects or qualities are applied or implemented as the operating light aspects or qualities.

At block **216**, the LED lamp **10** or LED lighting device **20** is operated at the operating light aspects or qualities. For example, the switch control unit **35** may cause the driver circuitry **19** to operate the LED lamp **10** or LED lighting device **20** at the operating light aspects or qualities (e.g., color temperature, brightness, CRI, and/or the like). For example, the driver circuitry **19** may operate at least one of the two or more LED packages **18** to cause the LED lamp **10** or LED lighting device **20** to emit light at the operating color temperature. For example, the driver circuitry **19** may operate a specific set of LED packages **18** to cause the LED lamp **10** or LED lighting device **20** to emit light at the operating color temperature (and/or brightness and/or CRI). In another example, the driver circuitry **19** may drive one or more LED packages **18** such that the LED lamp **10** or LED lighting device **20** emits light at the operating color temperature (and/or brightness and/or CRI). In yet another example, the switch control unit **35** may adjust one or more optical elements to cause the LED lamp **10** or LED lighting device **20** to emit light at the operating color temperature (and/or brightness and/or CRI and/or the like).

At block **218**, it is determined if a light aspect or quality change signal is received. For example, the switch control unit **35** may determine if a light aspect or quality change signal is received from the remote switch **40**. For example, the signal may indicate user selection of the color selector **44**, indicating the user would like to change one or more operating light aspects or qualities of the LED lamp **10** or the LED lighting device **20**. In another example, the signal may indicate user selection of the dimmer switch **42**, indicating the user would like to change the brightness of the light emitted by the LED lamp **10** or the LED lighting device **20**. For example, it is determined if a light aspect or quality change signal is received by the communication interface element **38**. If, at block **218**, it is determined that a light aspect or quality change signal is not received, the process returns to block **216**.

If, at block **218**, it is determined that a light aspect or quality change signal has been received, it determined if the LED lamp **10** or LED lighting device **20** is in a set operating mode, at block **220**. For example it may be determined if the switch **30** was set in a position indicating that the LED lamp **10** or LED lighting device **20** is to be operated in a set operating mode. For example, the switch control unit **35** (e.g., processing elements **37**) may determine if the LED lamp **10** or LED lighting device **20** is to be operated in a set operating mode. In some embodiments, determining if the LED lamp **10** or LED lighting device **20** is in a set operating mode does not require an active determination. For example, the switch **30** may be wired such that if the switch selector **34** is in set operating mode switch position, the switch control unit **35** may be bypassed and the provider circuit **17** corresponding to the selected set operating mode (e.g., a set operating color temperature) may be activated, completed, and/or the like causing the LED lamp **10** or LED lighting device **20** to be operated at the set operating light aspects or qualities.

If, at block **220**, it is determined that the LED lamp **10** or LED lighting device **20** is in a set operating mode, the process returns to block **216** without modifying the operating light aspects or qualities. If, at block **220**, it is determined that the LED lamp **10** or LED lighting device **20** is not in a set operating mode, the process continues to block **222**.

At block **222**, the operating light aspects or qualities of the LED lamp **10** or LED lighting device **20** are modified in accordance with the received light aspect or quality change signal. For example, the switch control unit **35** may activate a provider circuit **17** corresponding to a modified operating color temperature and may de-activate the previously activated provider circuit **17** corresponding to the previous operating color temperature. For example, the switch control unit **35** may cause one provider circuit **17** to provide a controlled electric current to the corresponding at least one

LED package **18** such that the LED lamp **10** or LED lighting device **20** emits light at the modified operating color temperature (and possibly at a modified brightness and/or CRI) and cause another provider circuit **17** to stop providing an electric current to the corresponding at least one LED package **18**. For example, the memory element **36** may be updated to indicate the new most recent operating light aspects or qualities. In example embodiments, the switch control unit **35** and/or driver circuitry **19** are configured to start operating the at least one of the two or more LED packages **18** at the modified operating light aspects or qualities within two seconds or less of the receipt of the signal indicating user-selection of the second operating light aspects or qualities. After the operating light aspects or qualities are modified, the process returns to block **216**.

In example embodiments, an LED lamp **10** or LED lighting device **20** may be configured to provide a programmable custom operating mode. For example, a user may select a custom operating color temperature (and/or brightness and/or CRI and/or the like) and/or program the LED lamp **10** or LED lighting device **20** (e.g., the switch control unit **35** thereof) to operate the LED lamp **10** or LED light device **20** in accordance with a custom programmed temporal operating program. For example, with reference to FIG. **8**, at block **202**, the switch **30** of the LED lamp **10** or the LED lighting device **20** may be placed in a position corresponding to a programmable custom operating mode. The user may further program the programmable custom operating mode (e.g., using the switch **30**, additional user interface components, remote switch **40**, and/or the like). In an example embodiment, programming programmable custom operating mode may comprise providing input identifying a custom operating color, selecting a brightness, selecting a CRI, and/or the like. For example, the LED lamp **10** or LED lighting device **20** may comprise first LED packages **18***a* and second LED packages **18***b*, wherein the first LED packages **18***a* are configured to emit light of a different color temperature than the second LED packages **18***b*. The switch control unit **35** may be configured to determine a ratio of the number of first LED packages **18***a* to the number of second LED packages **18***b* that should be activated to provide the custom operating color temperature. For example, the first LED packages **18***a* may be configured to emit light at 3000K and the second LED packages **18***b* may be configured to emit light at 5000 k. The programmable custom operating color temperature may be programmed to be 4500K. In this example, the switch control unit **35** may be configured to determine that one-fourth of the first LED packages **18***a* and three-fourths of the second LED packages **18***b* should be activated to provide a light at a color temperature of 4500K. The switch control unit **35** may then be configured to activate one or more provider circuits **17** in order to activate the appropriate LED packages **18** when the LED lamp **10** or LED lighting device **20** is turned on to provide light of the programmed custom operating color temperature. In another example, the switch control unit **35** may determine how one or more LED packages **18** should be driven to provide light having the user-selected light aspects or qualities. In another example, the switch control unit **35** may cause the primary or secondary optics, the amount of phosphor conditioning light from one or more LED packages **18**, and/or the like to be modified such that the LED lamp **10** or LED lighting device **20** emits light having the user-selected light aspects or qualities. At block **204**, the LED lamp **10** or LED lighting device **20** may be installed.

At some time after the LED lamp **10** or LED lighting device **20** is installed, the LED lamp **10** or lighting device **20** is turned on, at block **212**. For example, a user may turn on the LED lamp **10** or lighting device **20** by interacting with, selecting, pressing, and/or the like an on/off or power button, switch, and/or the like. For example, the user may interact with, select, press, and/or the like the on/off and/or dimmer switch **42** on the remote switch **40**, the remote switch **40** may provide an on/off signal to the switch control unit **35**, and the switch control unit **35** may cause the LED lamp **10** or LED lighting device **20** to turn on.

At block **214**, the light aspects or qualities (e.g., color temperature, brightness, CRI, and/or the like) that the LED lamp **10** or LED lighting device **20** are to be operated at may be identified. For example, the color temperature the LED lamp **10** or LED lighting device **20** was last operated at may be identified. In another example, the memory element **36** may be accessed (e.g., by the processing element **37**) to identify the appropriate operating light aspects or qualities based on the programmed custom operating mode, the time of day, and/or the like. If the LED lamp **10** or LED lighting device **20** is in a programmable custom operating mode in which a custom operating color temperature has been programmed, the switch control unit **35** may determine the appropriate combination of LED packages **18** to be activated to provide light of the custom operating color temperature and the corresponding provider circuits **17** that are to be activated, the current at which the provider corresponding provider circuits **17** are to be activated with, and/or the like.

At block **216**, the LED lamp **10** or LED lighting device **20** is operated at the identified operating light aspects or qualities. For example, the switch control unit **35** may cause the driver circuitry **19** to operate the LED lamp **10** or LED lighting device **20** at the operating light aspects or qualities. For example, the driver circuitry **19** may operate at least one of the two or more LED packages **18** to cause the LED lamp **10** or LED lighting device **20** to emit light at the identified operating color temperature. For example, the appropriate provider circuits for providing the identified operating color temperature are activated such that the LED lamp **10** or LED lighting device **20** provides light of the user-selected operating color temperature. For example, the driver circuitry **19** may drive one or more LED packages **18** to provide light having the identified light aspects or qualities.

At block **218**, it is determined if a light aspect or quality change signal is received. If a light aspect or quality change signal has not been received (e.g., as determined by the switch control unit **35**), the process returns to block **216**. If a light aspect or quality change signal is received, the process continues to step **220**, wherein it is determined if the LED lamp **10** or LED lighting device **20** is in a set operating mode. In some embodiments, the programmable custom operating mode may be a set mode, wherein the operating color temperature (and/or other light aspects or qualities) of the LED lamp **10** or LED lighting device **20** cannot be modified during operation of the LED lamp **10** or LED lighting device **20**. In some example embodiments, the programmable custom operating mode may be a selectively configurable mode, wherein the operating color temperature (or other light aspect or quality) of the LED lamp **10** or LED lighting device **20** may be modified during operation of the LED lamp **10** or LED lighting device **20**. For example, the operating color temperature of the LED lamp **10** or LED lighting device **20** may be switched between one or more predefined color temperatures (e.g., the first, second, and third color temperatures) and the programmed custom operating color temperature (and/or brightness and/or CRI and/or

the like). Thus, the switch control unit **35** may determine (e.g., based on the status of the switch **30** and/or one or more programs and/or the like stored by the memory element **36**) if the LED lamp **10** or LED lighting device **20** is in a set mode or a configurable mode.

If it is determined that the LED lamp **10** or LED lighting device **20** is in a set mode, the process returns to block **216**, and the LED lamp **10** or LED lighting device **20** continues to provide light at the operating light aspects or qualities. If it is determined that the LED lamp **10** or LED lighting device **20** is in a configurable mode, the process continues to block **222**. At block **222**, the operating light aspects or qualities are modified in accordance with the received light aspect or quality change signal. The process then returns to block **216**.

CONCLUSION

Many modifications and other embodiments of the invention set forth herein will come to mind to one skilled in the art to which the invention pertains having the benefit of the teachings presented in the foregoing descriptions and the associated drawings. Therefore, it is to be understood that the invention is not to be limited to the specific embodiments disclosed and that modifications and other embodiments are intended to be included within the scope of the appended claims. Although specific terms are employed herein, they are used in a generic and descriptive sense only and not for purposes of limitation.

That which is claimed:

1. An LED lighting device or LED lamp comprising:

one or more LED packages;

driver circuitry configured to provide a controllable electrical current to at least one of the one or more LED packages during operation of the LED lighting device or LED lamp;

a switch comprising at least two selectable positions, at least one selectable position corresponding to a set operating mode and one selectable position corresponding to a configurable operating mode; and

a communication interface element for communicating with a user-selection switch, the user-selection switch configured to provide an indication of received user input for selecting user-selected operating light qualities when the switch is in the selectable position corresponding to the configurable operating mode,

wherein:

when the switch is in the selectable position corresponding to the set operating mode, (a) the one or more LED packages are operated in accordance with predefined operating light qualities corresponding to the set operating mode and (b) in response to receiving the indication of received user input for selecting user-selected operating light qualities, the one or more LED packages continue to be operated in accordance with the predefined operating light qualities corresponding to the set operating mode, and

when the switch is in the selectable position corresponding to the configurable operating mode, in response to receiving the indication of received user input for selecting user-selected operating light qualities, operation of the one or more LED packages is modified in accordance with the user-selected operating light qualities.

2. The LED lighting device or LED lamp of claim **1**, wherein the operating light qualities are at least one of brightness, color temperature, or color rendering index (CRI).

3. The LED lighting device or LED lamp of claim **1**, wherein the one or more LED packages comprise a first LED package configured to emit light at a first color temperature and a second LED package configured to emit light at a second color temperature, wherein the first color temperature is not the same as the second color temperature.

4. The LED lighting device or LED lamp of claim **1**, further comprising a switch control unit comprising (a) a memory element and (b) a processor element, the memory element configured to store information identifying the operating light qualities the LED lighting device or LED lamp was most recently operated at and the processor element configured to identify the operating light qualities corresponding to a most recently received user-selection of the operating light qualities.

5. The LED lighting device or LED lamp of claim **1**, wherein when the switch is in a position to select the selectable option corresponding to the configurable operating mode, the lighting device or LED lamp is configured to receive a user-selection of modified operating light qualities, wherein the modified operating light qualities are different from the operating light qualities by at least one of brightness, color temperature, or color rendering index (CRI), and the driver circuitry is configured to modify the operation of the one or more LED packages from providing light having the operating light qualities to providing light having the modified light qualities.

6. The LED lighting device or LED lamp of claim **5**, wherein the driver circuitry is configured to start operating the one or more LED packages at the modified light qualities within two seconds of the receipt of the user-selection of the modified light qualities.

7. The LED lighting device or LED lamp of claim **1**, wherein when the switch is in a position to select a selectable option corresponding to a set operating mode, the switch activates a provider circuit of the driver circuitry configured to operate at least one of the one or more LED packages to provide light having the operating light qualities corresponding to the set operating mode.

8. The LED lighting device or LED lamp of claim **1**, wherein the switch further comprises at least one selectable option corresponding to a programmable custom operating mode.

9. An LED lighting device or LED lamp comprising:

one or more LED packages;

driver circuitry configured to provide a controllable electrical current to at least one of the one or more LED packages during operation of the LED lighting device or LED lamp; and

a switch comprising at least two selectable positions, at least one selectable position corresponding to a set operating mode and one selectable position corresponding to a configurable operating mode;

wherein, when the LED lighting device or LED lamp is on and:

when the switch is in the selectable position corresponding to the set operating mode, (a) the driver circuitry operates at least one of the one or more LED packages to emit light having predefined set operating light qualities that are determined based on the set operating mode and (b) in response to receiving a signal indicating a user-selection provided via a remote toggle switch, the driver circuitry continues

to operate at least one of the one or more LED packages to emit light having the predefined set operating light qualities,

when the switch is in the selectable position corresponding to the configurable operating mode, in response to receiving a signal indicating a user-selection provided via the remote toggle switch, the driver circuitry operates at least one of the one or more LED packages to emit light having operating light qualities corresponding to the user-selection, and

the remote toggle switch is a wall or junction box mounted remote toggle switch.

10. The LED lighting device or LED lamp of claim **9**, wherein the operating light qualities are at least one of brightness, color temperature, or color rendering index (CRI).

11. The LED lighting device or LED lamp of claim **9**, further comprising a switch control unit comprising (a) a memory element and (b) a processor element, the memory element configured to store information identifying the operating light qualities the LED lighting device or LED lamp was most recently operated at and the processor element configured to identify the operating light qualities corresponding to a most recently received signal indicating user-selection of the operating light qualities.

12. The LED lighting device or LED lamp of claim **9**, wherein when the switch is in a position to select the selectable option corresponding to the configurable operating mode, the lighting device or LED lamp is configured to receive a signal indicating user-selection of modified light qualities, wherein the modified operating light qualities are different from the operating light qualities by at least one of brightness, color temperature, or color rendering index (CRI), and the driver circuitry is configured to modify the operation of the one or more LED packages from providing light having the operating light qualities to providing light having the modified light qualities.

13. The LED lighting device or LED lamp of claim **9**, wherein the signal indicating user-selection of the modified light qualities is received through a wired connection with the remote switch.

14. An LED lighting device or LED lamp comprising:

one or more LED packages;

driver circuitry configured to provide a controllable electrical current to at least one of the one or more LED packages during operation of the LED lighting device or LED lamp; and

a switch comprising at least two selectable positions, at least one selectable position corresponding to a set operating mode and one selectable position corresponding to a configurable operating mode;

wherein, when the LED lighting device or LED lamp is on and:

when the switch is in the selectable position corresponding to the set operating mode, (a) the driver circuitry operates at least one of the one or more LED packages to emit light having predefined set operating light qualities that are determined based on the set operating mode and (b) in response to receiving a signal indicating a user-selection provided via a portable remote switch, the driver circuitry continues to operate at least one of the one or more LED packages to emit light having the predefined set operating light qualities,

when the switch is in the selectable position corresponding to the configurable operating mode, in response to receiving a signal indicating a user-selection provided via the portable remote switch, the driver circuitry operates at least one of the one or more LED packages to emit light having operating light qualities corresponding to the user-selection of user-selected operating light qualities.

15. The LED lighting device or LED lamp of claim **14**, wherein the portable remote switch is one of a remote control or a mobile computing entity operating an application configured to cause the mobile computing entity to act as a remote switch.

16. The LED lighting device or LED lamp of claim **14**, wherein when the switch is in a position to select the selectable option corresponding to the configurable operating mode, the lighting device or LED lamp is configured to receive a signal indicating user-selection of modified light qualities, wherein the modified operating light qualities are different from the operating light qualities by at least one of brightness, color temperature, or color rendering index (CRI), and the driver circuitry is configured to modify the operation of the one or more LED packages from providing light having the operating light qualities to providing light having the modified light qualities.

17. The LED lighting device or LED lamp of claim **14**, further comprising a switch control unit comprising a communication interface element configured to receive a signal indicating a user-selection, the user selection provided through user interaction with the remote switch.

18. The LED lighting device or LED lamp of claim **17**, wherein the communication interface element is configured to receive the signal by at least one of a short range communication technology or a wireless communication technology.

19. The LED lighting device or LED lamp of claim **14**, further comprising a switch control unit comprising (a) a memory element and (b) a processing element, the memory element being configured to store information identifying the operating light qualities the LED lighting device or LED lamp was most recently operated at and the processor element being configured to identify the operating light qualities corresponding to a most recently received signal indicating user-selection of the operating light qualities.

20. The LED lighting device or LED lamp of claim **14**, wherein the operating light qualities are at least one of brightness, color temperature, or color rendering index (CRI).

21. The LED lighting device or LED lamp of claim **14**, further comprising a switch control unit comprising a processing element, processing element configured to process the received signal and cause the driver circuitry to operate at least one of the one or more LEDs in accordance with the received signal.

22. The LED lighting device or LED lamp of claim **14**, wherein when the switch is in a position to select a selectable option corresponding to a set operating mode, reception of a signal from the remote switch indicating user-selection of modified operating light qualities does not trigger the driver circuitry to change the operation of the at least one of the one or more LED packages.

* * * * *