US007192160B2

(12) **United States Patent**
Reiff, Jr. et al.

(10) **Patent No.: US 7,192,160 B2**
(45) **Date of Patent: Mar. 20, 2007**

(54) **LIGHT FIXTURE**

(75) Inventors: **David L Reiff, Jr.**, Bluffton, IN (US); **Paul J Reiff**, Bluffton, IN (US); **Clyde M Brown**, Hebron, IN (US)

(73) Assignee: **General Manufacturing, Inc.**, Bluffton, IN (US)

(*) Notice: Subject to any disclaimer, the term of this patent is extended or adjusted under 35 U.S.C. 154(b) by 98 days.

(21) Appl. No.: **10/889,411**

(22) Filed: **Jul. 12, 2004**

(65) **Prior Publication Data**

US 2006/0007682 A1 Jan. 12, 2006

(51) **Int. Cl.**
F21V 9/00 (2006.01)

(52) **U.S. Cl.** **362/231**; 362/228; 362/260

(58) **Field of Classification Search** 362/230, 362/231, 260, 295, 228
See application file for complete search history.

(56) **References Cited**

U.S. PATENT DOCUMENTS

5,060,118 A * 10/1991 Penrod et al. 362/1
6,062,706 A * 5/2000 Owen 362/231
6,126,303 A * 10/2000 Gross 362/544
6,932,492 B2 * 8/2005 Tumlinson et al. 362/228

* cited by examiner

Primary Examiner—Sandra O'Shea
Assistant Examiner—James W Cranson, Jr.
(74) *Attorney, Agent, or Firm*—Baker & Daniels LLP

(57) **ABSTRACT**

A light for use in applications requiring conventional and specialized, dimmable lighting wherein the color of the emitted light can easily be switched. The light includes fluorescent and/or LED light sources which are dimmable by a control box. The control box further allows for switching between two light sources provided in the light. The light sources may provide white light or specialized light including red or blue "invisible" light required in some military applications or UV lighting.

18 Claims, 4 Drawing Sheets

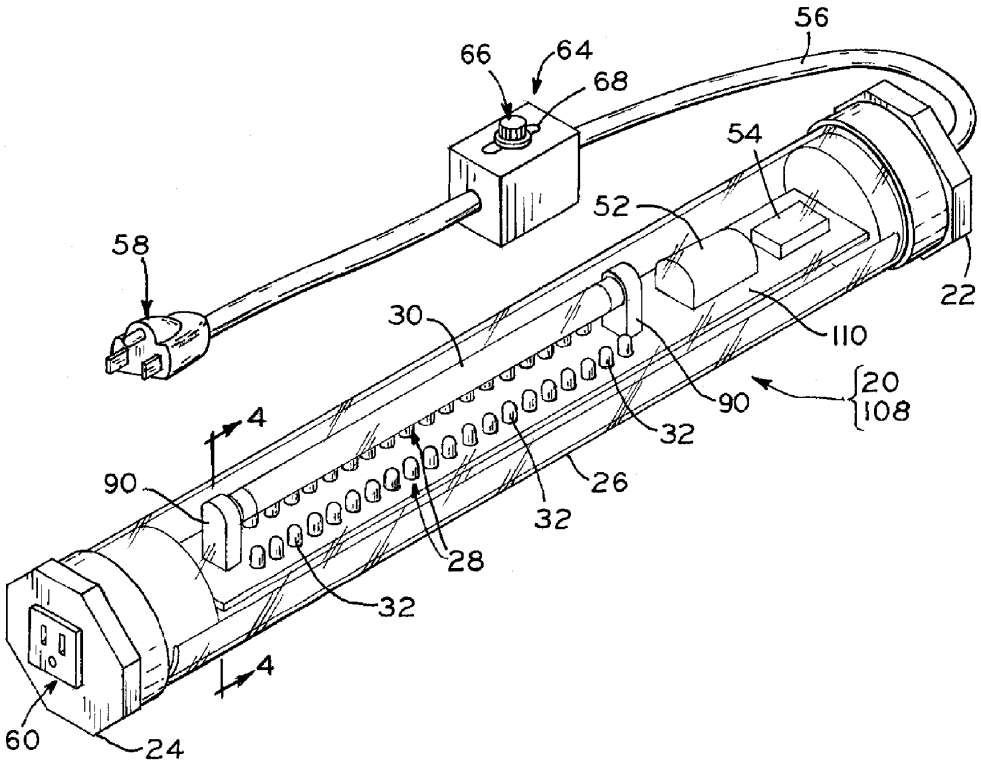

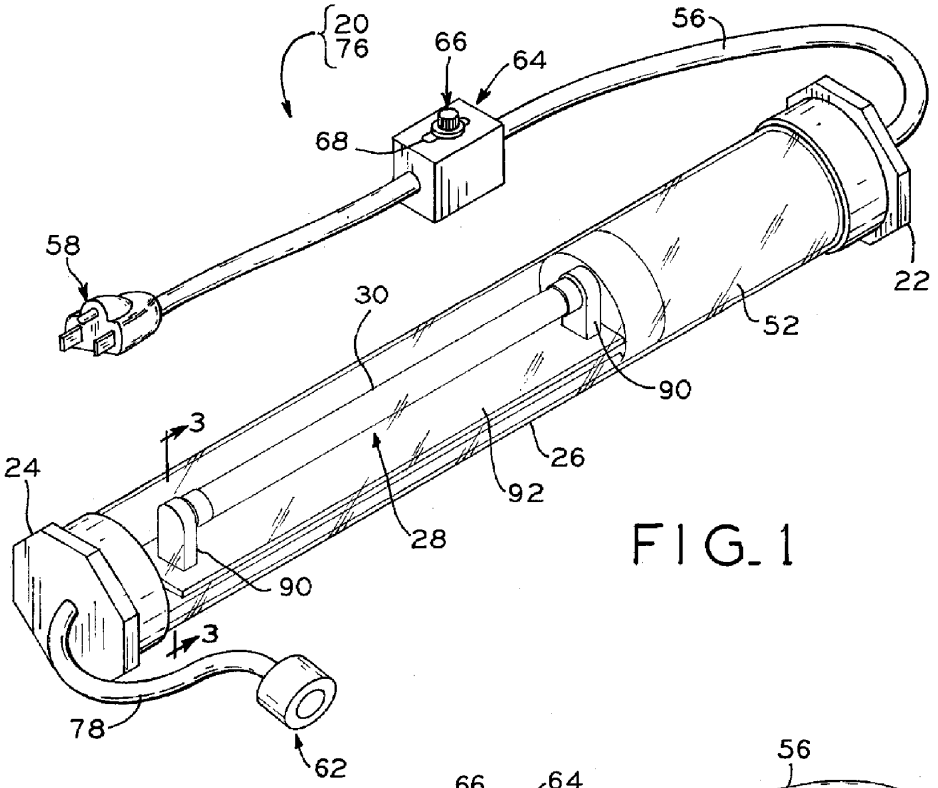
20
76
66
64
56
68
58
22
30
52
90
3
24
26
92
28
90
3
78
62

FIG. 1

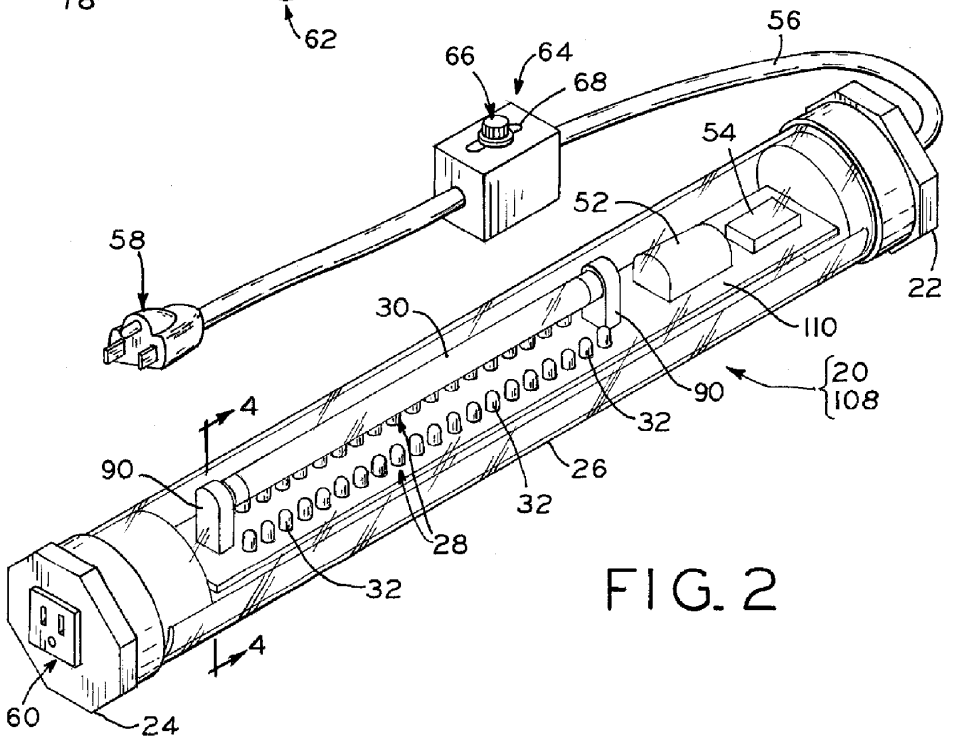
56
66
64
68
54
52
58
22
30
110
90
20
108
4
32
90
26
32
28
32
4
60
24

FIG. 2

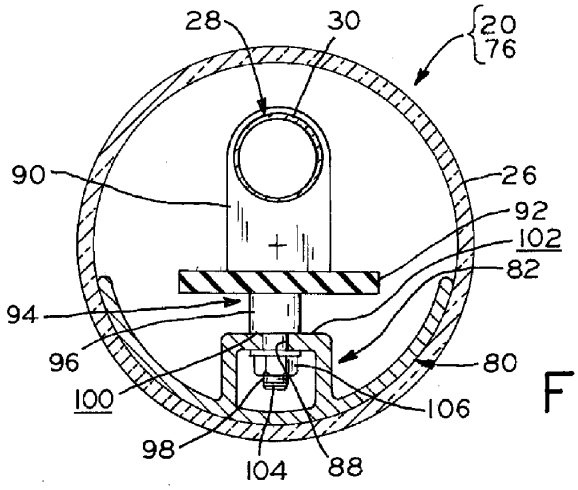

FIG. 3

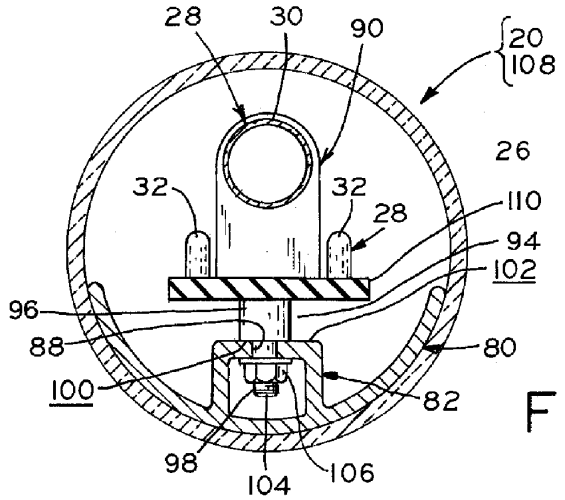

FIG. 4

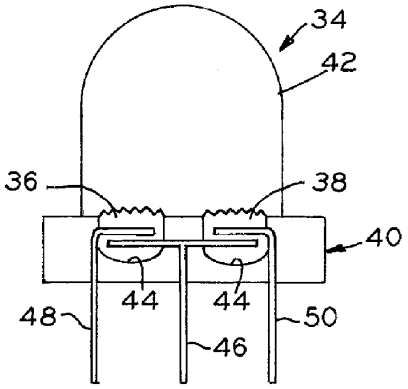

FIG. 6

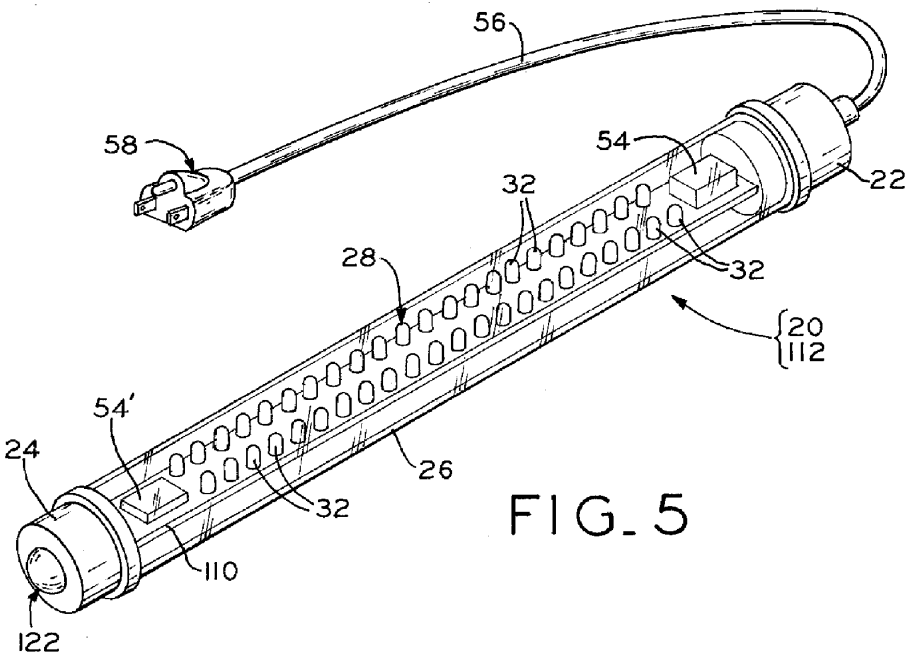

FIG_5

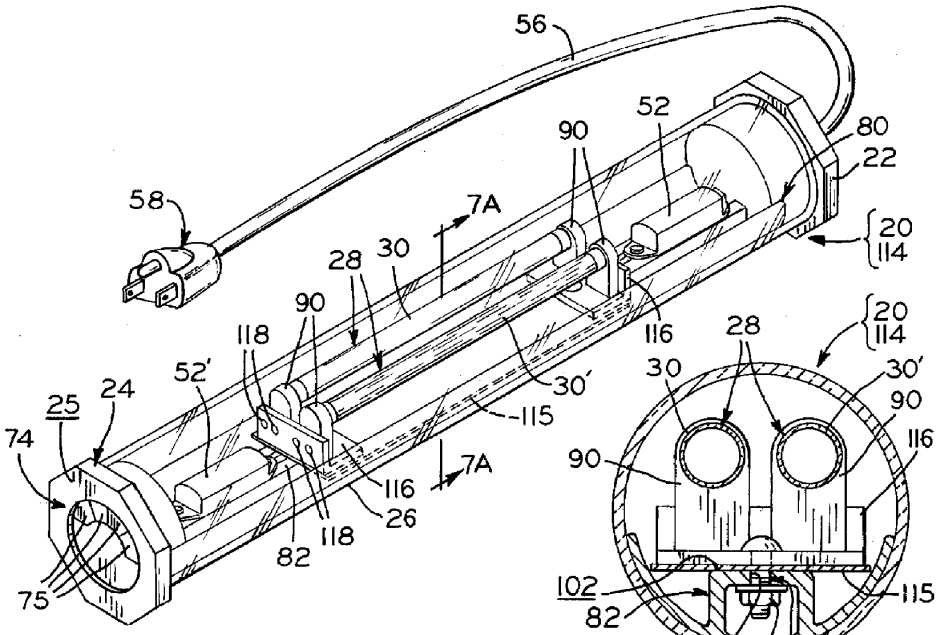

FIG_7

FIG_7A

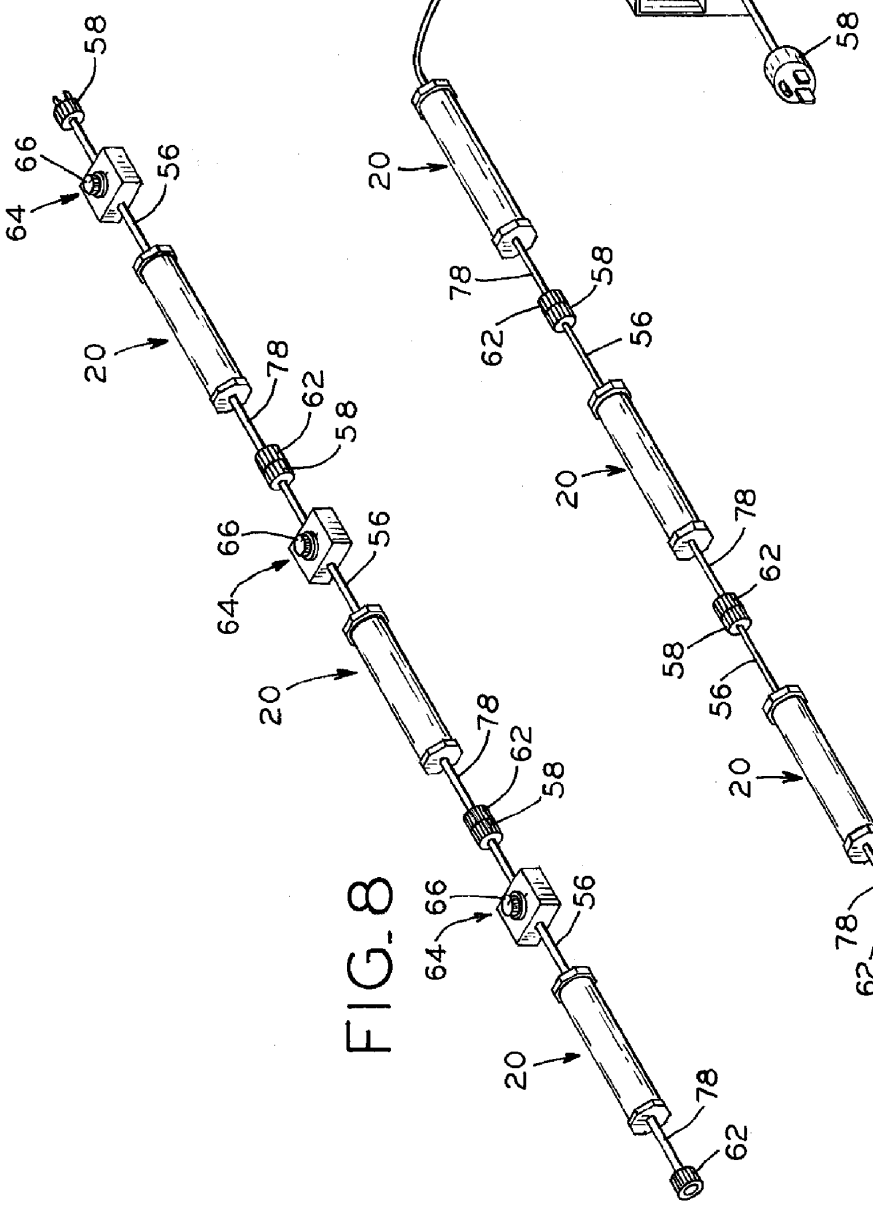
58
66
64
56
20
78
62
58
66
64
56
20
78
62
58
66
64
56
20
78
62

FIG_8

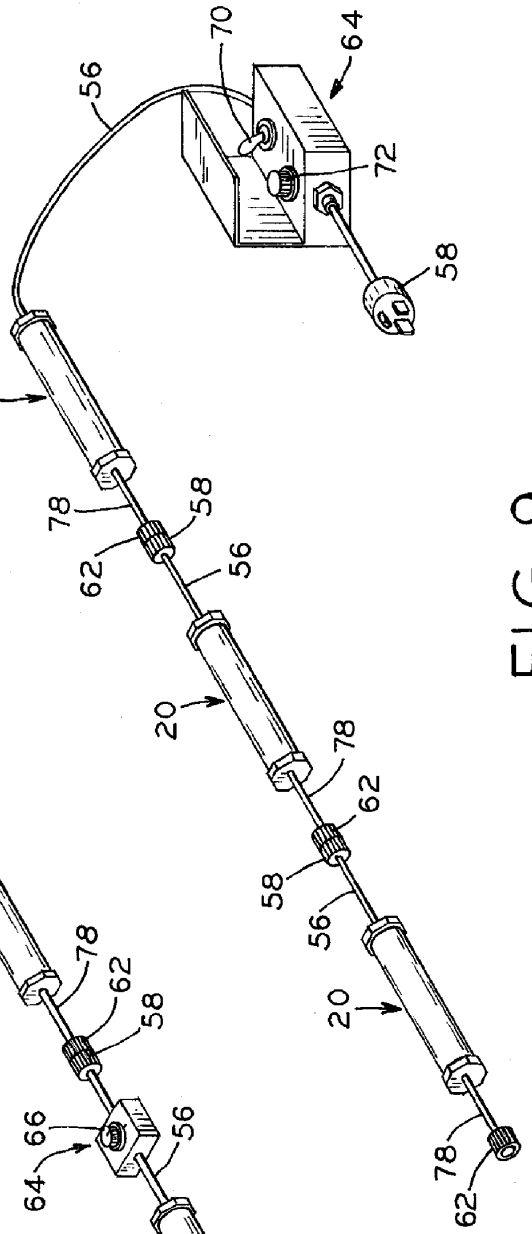
70
64
56
72
58
20
78
58
62
56
20
78
62
58
56
20
78
62

FIG_9

LIGHT FIXTURE

BACKGROUND OF THE INVENTION

1. Field of the Invention

The present invention relates to lighting having multiple sources of light particularly useful for specialized industrial or military applications. In particular, this invention relates to such a light wherein the color of light emitted can be changed by an in line switch.

2. Description of the Related Art

In general, lighting is necessary for a multitude of industrial and military applications including in warehousing areas, military tents, and military vehicles. In some of these applications, specialized lighting may be required. Such specialized lighting includes the use of "invisible" light, e.g., the use of a red or blue light for tasks including map reading, tent lighting, or cockpit lighting. Other specialized lighting may include infrared light for night vision, and UV lights used for curing epoxies or detecting leaks.

With particular regard to the military applications, conventional fluorescent lamps used to illuminate tents, for example, produce white light which is not "invisible" light. The light produced by fluorescent lamps may be detectable, and is therefore undesirable. In order to provide invisible light, a light source emitting red or blue light, for example, may be used. The red or blue light may be provided by placing a covering over a fluorescent light, the use of a colored incandescent bulb, or colored Light Emitting Diodes (LEDs). When such lights are mounted in a position which is not readily accessible, it is difficult and time consuming to snap such covers on to change the color of the emitted light. The use of incandescent bulbs is undesirable as the life of the bulb is much less than that of a fluorescent lamp. Additionally, the heat produced by incandescent bulbs is greater than a fluorescent lamp and may also be detectable. Finally, many conventional lights are not sufficiently sturdy for industrial/military applications.

In an industrial area, UV lighting may be used for curing applications such as paint or epoxies. The UV light may also be used to detect leaks in automobiles or in fluid systems such as heating and cooling systems, for example.

When specialized lighting is used or is necessary for a task, the light having a red, blue, infrared, or UV light source is often a portable light which must be transported between areas. These specialized lights may not be large enough to illuminate a large tent as a, e.g., command center or curing room. Alternatively, if the lights are large, they are cumbersome and not easily transferred between areas.

It is desired to provide a light having the capability of producing both conventional and specialized light colors for an area while being sturdy and durable enough to endure harsh and extreme environments, and wherein the color of the emitted light can be switched by means of an in line switch.

SUMMARY OF THE INVENTION

The present invention provides an improved light for use in applications requiring both conventional and specialized, dimmable lighting in several areas including industrial or military.

The lights have a transparent tubular housing portion with end caps located at opposite end of the housing member. Mounted within the housing is a plate to which the light source is mounted. The plate may be in the form of a circuit board for mounting of LEDs. Extending from one end cap

is an electrical cord having a plug at the distal end thereof. A control box for operating the light is located along the cord. The opposite end cap is provided with a service receptacle or electrical outlet, or a polarized connector for facilitating connection of the lights in series. In addition, an electrical device such as a tool may be plugged into the electrical service outlet of the light. The series of lights may have a master/slave configuration in which all the lights in the series are controlled by one control box. Alternatively, each light in the series may be provided with a control box for independently controlling each light. The lights are dimmable and may easily be switched between the white, red, specialized red, blue, or in some cases UV, light sources. The construction of the light is such that the light can withstand the harsh, extreme conditions associated with the different industrial or military applications, for example.

The present invention comprises, in one form thereof, a light fixture having a base and two light sources mounted on the base. Each of the light sources emits a different color of light. A control is provided for selectively energizing one or another of the light sources, whereby the light fixture emits one or another color of light.

An advantage of the present invention is that the light may be provided with both a conventional white light source and a specialized light source such as red, blue, or UV lights.

A further advantage of the present invention is that the light is easily operable between the multiple light sources and is dimmable.

An additional advantage of the present invention is that the lights may be interconnected to form a string of lights used to illuminate a large area with the lights being operable by one control box or by individual control boxes located between each pair of lights.

BRIEF DESCRIPTION OF THE DRAWINGS

The above mentioned and other features and objects of this invention, and the manner of attaining them, will become more apparent and the invention itself will be better understood by reference to the following description of embodiments of the invention taken in conjunction with the accompanying drawings, wherein:

FIG. **1** is a perspective view of a light in accordance with the present invention;

FIG. **2** is a perspective view of an alternative embodiment of a light in accordance with the present invention;

FIG. **3** is a sectional view of the light of FIG. **1** taken along line **3**—**3**;

FIG. **4** is a sectional view of the light of FIG. **2** taken along line **4**—**4**;

FIG. **5** is a perspective view of a third embodiment of a light in accordance with the present invention;

FIG. **6** is a sectional view of a dual color LED;

FIG. **7** is a perspective view of a fourth embodiment of a light in accordance with the present invention;

FIG. **7**A is a section view of the light of FIG. **7** taken along line **7**A—**7**A;

FIG. **8** is a perspective view of a plurality of lights linked in series, each light having an independent control box; and

FIG. **9** is a perspective view of a plurality of lights linked in series, the series having a master/slave arrangement operable by a single control box.

Corresponding reference characters indicate corresponding parts throughout the several views. Although the exemplification set out herein illustrates several embodiments of the invention, in one form, the embodiments disclosed

below are not intended to be exhaustive or to be construed as limiting the scope of the invention to the precise forms disclosed.

DESCRIPTION OF THE PRESENT INVENTION

Referring to FIGS. **1**–**9**, shelter or work lights such as those shown in the illustrated embodiments may provide both conventional and specialized, dimmable lighting in a single light for use in industrial or military applications, for example. Such lights may be anywhere from 1 foot to 8 feet in length and are designed to illuminate a military vehicle as well as large areas including rooms or tents. The lights are constructed to be very durable and able to endure harsh and extreme environments in which they may be used. The lights of the present invention relate to the work lights described in U.S. patent application Ser. No. 10/119,555 which is assigned to the assignee of the present invention, the disclosure of which is hereby incorporated herein by reference.

Light **20** of the present invention is generally tubular having two end caps **22** and **24** engaging opposite ends of a transparent housing **26** (FIGS. **1**, **2**, **5**, and **7**). Transparent housing **26** extends the length of the light and encases light source or sources **28** mounted therein. Housing **26** and end caps **22** and **24** are constructed from a durable material such as plastic by any suitable method including molding, for example.

Light sources **28** used in the embodiments of the lights described hereinbelow may include fluorescent lamps **30** and LEDs **32**. Fluorescent lamps **30** are conventional lamps which emit white light. In general, fluorescent lamps produce significant amounts of light, approximately 63 lumens of light per watt sufficient to illuminate any of the above described areas.

LEDs **32** have a life that is much greater than that of a fluorescent or incandescent lamp. LEDs which emit white light generate approximately 12 lumens of light per watt of power. Therefore, only 5 LEDs are required to produce the same amount of light per rated watt of the conventional fluorescent lamp.

LEDs have an outer shell in which an active substance such as a phosphor compound, gallium nitride, or gallium arsenide is contained. When electrical current is supplied to the LEDs, the active substance is excited causing the emission of visible light. The color of the LED is determined by the color of the outer shell or the type of active substance located in the LED. The LEDs may be of any suitable type emitting white light, or red, blue, or infrared "invisible" light which is of particular use in military applications. Additionally, the LEDs may emit UV light which is useful in leak detection or curing applications in industrial areas. LEDs may be purchased from several sources including LEDtronics, Inc., 4009 Pacific Coast Highway, Torrence, Calif.; Chicago Miniature Lamp, Inc., 147 Central Avenue, Hackensack, N.J.; Q.T. Optoelectronics, 610 North Mary Avenue, Sunnyvale, Calif.; Lumex Optocomponents, Inc., 292 East Hellen Road, Palatine, Ill.; and Gelcore, 6180 Halle Drive, Valley View, Ohio.

Referring to FIG. **6**, LEDs **32** may be a dual color LED **34** in which the LED is provided with two different types of active substances or illuminating material **36** and **38**. LED **34** includes base **40** and dome-shaped transparent cover **42**. Illuminating material **36** and **38** is located in cups **44** integrally formed in base **40** with common electrode **46** engaging both materials. Electrodes **48** and **50** are also provided with each electrode being embedded in one of illuminating materials **36** and **38**. When electrical current is supplied to electrode **48** of LED **34**, illuminating material **36** is excited and LED **34** emits a first color, red or white for example. When electrical current is supplied to the second electrode **50**, the second illuminating material **38** is excited and LED **34** emits the second color.

The embodiments of the lights **20** discussed hereinbelow may be operated from any typical supply of 120 to 240-volt AC power, a DC generator, a battery, or a battery pack, for example. Lights **20** are provided with the appropriate electrical components depending on the type of light source and power supply. Referring to FIG. **2**, the electrical components include a conventional fluorescent ballast **52** and LED driver **54** which transform input current from a power source into regulated operational current required by the fluorescent lamp **30** and LEDs **32**, respectively.

When light **20** is powered by conventional 120-volt power, electrical cord **56** extends from one end **22** of the light having plug **58** at a distal end of the cord for insertion into a conventional electrical outlet. Advantageously, means for electrically linking a series of lights **20** may be provided at the opposite end of the light from electrical cord **56** in end cap **24**. These means may include electrical service outlet **60** as shown in FIG. **2** or polarized connector **62** as illustrated in FIG. **1**. The polarized connection is a water sealed connection typically used by the military. In addition to linking multiple lights **20**, other electrically operated devices such as a tool may be plugged into electrical outlet **60**.

Lights **20** may be provided with control box **64** which includes a switch of any suitable type for turning the light on and off and selecting between different light sources **28**. Then, either a regular white light fluorescent light source can be selected, or a "colored" LED light source can be selected. Referring to FIGS. **1** and **2**, control box **64** may include switch **66** which is a stepped dimmer switch linearly slideable in slot **68** to select light source **28** and rotatable to control the brightness of light source **28**. Referring to FIG. **9**, control box **64** may include light source selector switch **70** and dimmer knob **72** rotatable to control the brightness of the selected light source **28**. Additionally, as shown in FIG. **5**, light **20** may be provided with push button stepping switch **122** located in end cap **24**. Push button stepping switch **122** may be configured to turn light **20** on and off as well as selectively illuminating one row of LEDs **32** at a time. For example, when push button stepping switch **122** is depressed a first time, one row of LEDs **32** is illuminated. By depressing button **122** again, the illuminated row of LEDs **32** turns off. Actuating push button stepping switch **122** a third time causes the second row of LEDs **32** to be illuminated. Push button stepping switch **122** is illustrated as being located in end cap **24** however; the switch may be conveniently positioned along the side of light **20**. Alternatively, as shown in FIG. **7**, light **20** may be provided with a membrane switch **74** positioned in end cap **24**. Membrane switch **74** is illustrated as being located in end cap **24** however; the switch may be conveniently positioned on the side of the light. Membrane switch may include multiple buttons **75** for operating light **20** including buttons for turning the light on and off, selecting a light source, and increasing or decreasing the intensity of the light. This type of switch eliminates the use of control box **64** and is sealed which may be particularly useful in harsh and extreme environments. Any suitable switch may be used to control light **20** providing the switch has the capability of operating multiple light sources, as well as providing a means for dimming the light source.

Referring to FIGS. **8** and **9**, lights **20** may be electrically linked in series. In the embodiment shown in FIG. **8**, each light **20** is provided with a control box **64** allowing each light

to be individually operated. This may be advantageous in military barracks for example. Each soldier would have control of his or her own light **20** while requiring only one source of electrical power for the entire string of lights **20**. Referring to the embodiment of FIG. **9**, lights **20** may be arranged in a master/slave arrangement. The string of lights **20** has one control box **64** which operates all of the lights in the series. The first light **20** is the master and the remaining lights electrically connected thereto are slaves. Up to 40 lights may be electrically linked to one another.

Several combinations of light sources **28** may be used to create different embodiments of light **20**. The first embodiment of light **20** in accordance with the present invention is light **76** shown in FIG. **1**. Light **76** is provided with a single light source **28** which, in this embodiment, is fluorescent lamp **30** emitting white light. The fluorescent lamp may also be provided with a colored covering to provide red or blue "invisible" light, for example. Light **76** includes transparent, cylindrical housing **26** having end caps **22** and **24** secured to opposite ends thereof. Electrical cord **56** extends from end cap **24** having control box **64** located along the cord. Control box **64** includes switch **66** which is rotatable to control the intensity of light source **28**. Switch **66** slides linearly in slot **68** formed in control box **64** to turn the light on and off. Light **76** is illustrated as being provided with this particular switch **66**, however, light **76** may be adapted with any suitable type of switch. Plug **58** is provided at the end of electrical cord **56** for insertion into an electrical outlet. Extending from opposite end cap **24** is cord **78** having polarized connector **62** located at the end thereof for linking a plurality of lights **76** in series. Ballast **52** is located in housing **26** near end cap **22** and is electrically connected to fluorescent lamp **30** to regulate current entering the lamp.

Referring to FIG. **3**, mounted within cylindrical housing **26** is backbone support **80**. Backbone support **80** is constructed from any suitable material which is lightweight yet sturdy enough to provide a base on which light source **28** is mounted. A suitable material may include aluminum. Backbone support **80** extends the length of light **76** and has a semi-circular cross section sized to engage the interior surface of housing **26**. Protruding upwardly from the interior surface of backbone support **80** and integrally formed therewith is nut rail **82** having opening **88** defined therein. Light **76** is provided with backbone support **80** to add stability to light source **28**, particularly when the light source is removed and replaced.

Fluorescent lamp **30** is mounted by contact posts **90** to a flat mounting plate **92** which extends the length of the light. Contact posts **90** stand upright, substantially perpendicularly to plate **92** being secured thereto by any suitable method. Contact posts **90** provide the electrical contacts for fluorescent lamp **30** to engage and complete the electrical circuit in light **76**. As shown in FIG. **3**, extending from the lower surface of plate **92** is mounting post **94** having larger diameter portion **96** and smaller diameter portion **98**. The smaller diameter portion **98** is received in opening **88** defined in nut rail **82** with surface **100** of larger diameter portion **96** engaging surface **102** of the nut rail. End **104** of smaller diameter post portion **98** is threaded with nut **106** engaging the post portion to secure plate **92** having fluorescent lamp **30** mounted thereon to backbone support **80**.

Referring to FIGS. **2** and **4**, a second embodiment of a light in accordance with the present invention is shown. Light **108** is provided with two light sources **28** one of which is fluorescent lamp **30** emitting white light and LEDs **32** emitting red, blue, or UV light, for example. Light **108** is of similar construction to light **76** described above having transparent cylindrical housing **26** closed at both ends by end caps **22** and **24**. Located in end cap **24** is a conventional electrical outlet **60** which as discussed previously may be used to link a plurality of lights in series. Alternatively, electrical outlet **60** may be used for providing electrical power to an electrical device such as a tool. Due to the fact that one of the light sources associated with this light is LEDs **32**, plate **92** of the first embodiment is replaced by circuit board **110** to which the LEDs are mounted. Fluorescent lamp **30** is mounted to circuit board **110** by contact posts **90** as discussed above with respect to light **76**. Also mounted to circuit board **110** is ballast **52** for regulating input current entering fluorescent lamp **30** and LED driver **54** for regulating the input current prior to illuminating LEDs **32**. Circuit board **110** having fluorescent lamp **30** and LEDs **32** mounted thereto is secured within cylindrical housing **26** using backbone supports **80** as described above.

Located along electrical cord **56** extending from end cap **22** is control box **64** which is provided with switch **66** for operating fluorescent lamp **30** and LEDs **32**. Switch **66** has three positions, one position being the off position as shown in FIG. **2**, one position operating the fluorescent lamp and one position operating the LEDS. Switch **66** slides into one of the three positions and is rotatable to control the intensity of the light source. Light **108** is illustrated as being provided with switch **66**; however, any suitable type of switch may be used to operate the light. The number of LEDs **32** mounted to circuit board **110** further defines the maximum intensity of the light emitted therefrom such that the more LEDs provided, the greater the maximum intensity.

A further embodiment of a light in accordance with the present invention is illustrated in FIG. **5**. Light **112** is provided with one light source **28**, LEDs **32**, which are mounted to circuit board **110** extending longitudinally between end caps **22** and **24** of the light. Both red and white LEDs **32** are provided in light **112**, being mounted to circuit board **110** in any suitable configuration. Light **112** may be provided with one row of white LEDs **32** and one row of red LEDs **32**. Additionally, the red and white LEDs may be alternated. A further possibility includes the use of the dual color LEDs **34** illustrated in FIG. **6** and discussed above wherein each LED **34** has the capability of producing both red and white light. Besides the use of red and white light LEDs, other color LEDs could be selected such as blue, green, UV, or infrared.

Mounted to opposite ends of circuit board **110** are two LED drivers **54** and **54'** with one driver provided for regulating the current supplied to each of the red and white LEDs **32**. Light **112** is provided with push button stepping switch **122** located in end cap **24** for operation thereof, however, any suitable type of switch may be provided. With push button stepping switch **122** located in end cap **24**, light **112** is not provided with means for electrically linking a plurality of lights. However, it is understood that push button stepping switch **122** may be positioned in a different location on the light and the light may be provided with an electrical outlet or polarized connector as illustrated in previous embodiments. Alternatively, a control box **64** could be employed in an easily accessible location to switch the light fixture between various colors of light to be emitted.

A fourth embodiment of a light in accordance with the present invention is illustrated in FIGS. **7** and **7**A. Similarly to light **112**, light **114** is provided with only one light source **28**. Light **114** includes a pair of fluorescent lights **30** and **30'** mounted to backbone **80** via brackets **116** and contact posts **90**. Backbone **80** is provided including nut rail **82** to which brackets **116** are mounted in a similar manner to that

described above. In this embodiment, mounting post **94** is removed. Reflective aluminum sheet **115** is located between brackets **116** and nut rail **82**. As shown in FIG. **7**, reflective aluminum sheet **115** extends the length of fluorescent lamps **30** and **30'** to reflect light emitted therefrom. Threaded fastener **117** extends through bracket **116**, reflective aluminum sheet **115**, and opening **88** in nut rail **82** with nut **106** engaging fastener **117** to secure bracket **116** and sheet **115** to backbone **80**. The fluorescent lamps **30** and **30'** engage contact posts **90** at each end to complete the electrical circuit in the light. Contact posts **90** are mounted to L-shaped brackets **116** by fasteners **118**, for example. Brackets **116** are constructed from any suitable material able to support lamps **30** and **30'**. Also mounted to backbone **80** are two ballasts **52** and **52'** which regulate current passing through each of the fluorescent lamps **30** and **30'**, respectively. In this embodiment, both lamps **30** and **30'** are conventional fluorescent lights, however, in order to provide both white and red or blue light, fluorescent lamp **30'** is covered with a red or blue, plastic material able to withstand the heat produced by the light.

Extending from end cap **22** is electrical cord **56** having plug **58** at a distal end of the cord for insertion into a conventional electrical outlet. Membrane switch **74** is located in end cap **24** being recessed inwardly from surface **25** of end cap **24** so as to protect membrane switch **74**. Membrane switch **74** is provided with a plurality of buttons **75** which are used to operate light **114** including controlling the intensity of light sources **28**. End cap **24** of light **114** is not provided with an electrical outlet or polarized connector, however, it is understood that end cap **24** may be adapted to include this feature if membrane switch **74** is located in a different position on light **114**.

While this invention has been described as having exemplary designs, the present invention may be further modified within the spirit and scope of this disclosure. This application is therefore intended to cover any variations, uses, or adaptations of the invention using its general principles. Further, this application is intended to cover such departures from the present disclosure as come within known or customary practice in the art to which this invention pertains.

What is claimed is:

1. A light fixture comprising:

a base;

two light sources mounted on said base, wherein one of said two light sources is one of an incandescent light and a fluorescent light, each of said light sources emitting a different color of light;

an enclosure substantially surrounding said light sources, at least a portion of said enclosure formed from a transparent material to allow the passage of light therethrough; and

a control for selectively energizing one or another of said light sources, whereby said light fixture emits one or another color of light.

2. The light fixture according to claim **1** wherein said light colors are selected from the group consisting of white, red, green, blue, infrared, and ultraviolet light.

3. The light fixture according to claim **1** wherein said control comprises an electrical switch.

4. The light fixture according to claim **1** wherein said light sources comprise a first fluorescent lamp which emits a first color of light, and a second fluorescent lamp having a colored covering, to thereby emit a second color of light.

5. The light fixture according to claim **1** wherein said light sources comprise a fluorescent lamp and at least one LED, said fluorescent lamp and LED emitting two different colors of light.

6. The light fixture according to claim **1** wherein said light fixture is elongated.

7. The light fixture according to claim **1** wherein said light fixture further comprises a dimmer to dim the intensity of the light emitted by said light fixture.

8. The light fixture according to claim **1**, further comprising:

a backbone support mounted to said base, said backbone support substantially supporting said base within said enclosure.

9. The light fixture according to claim **8** wherein said enclosure comprises a pair of opposing ends, said light fixture further comprising:

a plurality of end caps secured to said opposing ends of said enclosure.

10. The light fixture of claim **9** wherein at least one of said plurality of end caps comprises an electrical service outlet.

11. The light fixture of claim **9** wherein at least one of said plurality of end caps comprises a polarized connector.

12. The light fixture of claim **1**, further comprising:

a second light fixture, the first said light fixture electrically connected to said second light fixture in series, said second light fixture further comprising:

a base;

two light sources mounted on said base, each of said light sources emitting a different color of light; and

an enclosure substantially surrounding said light sources; at least a portion of said enclosure allowing passage of light therethrough.

13. The light fixture of claim **1**, further comprising:

a second light fixture, the first said light fixture electrically connected to said second light fixture in parallel, said second light fixture further comprising:

a base;

two light sources mounted on said base, each of said light sources emitting a different color of light;

an enclosure substantially surrounding said light sources; at least a portion of said enclosure allowing passage of light therethrough; and

a control for selectively energizing one or another of said light sources, whereby said light fixture emits one or another color of light.

14. The light fixture of claim **1**, further comprising:

a second light fixture, the first said light fixture electrically connected to said second light fixture in series, said second light fixture further comprising:

a first light source capable of emitting a first color of light selected from the group consisting of ultraviolet light and infrared light;

a second light source capable of emitting a second color of light; and

an enclosure substantially surrounding said first and said second light sources, at least of portion of said enclosure allowing the passage of light therethrough.

15. The light fixture of claim **1**, further comprising:

a second light fixture, the first said light fixture electrically connected to said second light fixture in parallel, said second light fixture further comprising:

a first light source capable of emitting a first color of light selected from the group consisting of ultraviolet light and infrared light;

a second light source capable of emitting a second color of light;

an enclosure substantially surrounding said first and said second light sources, at least of portion of said enclosure allowing the passage of light therethrough; and

a control, said control having a first configuration for energizing said first light source and a second configuration for energizing said second light source.

16. A light fixture comprising:

a first light source capable of emitting a first color of light selected from the group consisting of ultraviolet light and infrared light;

a second light source capable of emitting a second color of light, wherein said second light source is one of an incandescent light and a fluorescent light;

an enclosure substantially surrounding said first and said second light sources, at least of portion of said enclosure formed from a transparent material to allow the passage of light therethrough; and

a control, said control having a first configuration for energizing said first light source and a second configuration for energizing said second light source.

17. The light fixture according to claim **16**, further comprising:

a base, said base connected to said first and said second light sources and substantially supporting said first and second light sources; and

a backbone support mounted to said base, said backbone support substantially supporting said base, wherein said base and said backbone support are substantially contained within said enclosure.

18. The light fixture according to claim **16**, wherein said enclosure comprises a pair of opposing ends, said light fixture further comprising:

a plurality of end caps secured to said opposing ends of said enclosure.

* * * * *