PTO/AIA/15 (03-13)
Approved for use through 01/31/2014. OMB 0651-0032
U.S. Patent and Trademark Office; U.S. DEPARTMENT OF COMMERCE
Under the Paperwork Reduction Act of 1995 no persons are required to respond to a collection of information unless it displays a valid OMB control number

UTILITY PATENT APPLICATION TRANSMITTAL

(Only for new nonprovisional applications under 37 CFR 1.53(b))

Attorney Docket No.	13682.227107
First Named Inventor	Steven Walter Pyshos
Title	Configurable Lighting System
Express Mail Label No.	

APPLICATION ELEMENTS

See MPEP chapter 600 concerning utility patent application contents.

1. ☐ **Fee Transmittal Form** (PTO/SB/17 or equivalent)
2. ☐ **Applicant asserts small entity status.** See 37 CFR 1.27
3. ☐ **Applicant certifies micro entity status.** See 37 CFR 1.29. Applicant must attach form PTO/SB/15A or B or equivalent.
4. ☑ **Specification** [*Total Pages* 21] Both the claims and abstract must start on a new page. *(See MPEP § 608.01(a) for information on the preferred arrangement)*
5. ☑ **Drawing(s)** (35 U.S.C. 113) [*Total Sheets* 10]
6. **Inventor's Oath or Declaration** [*Total Pages* 3] *(including substitute statements under 37 CFR 1.64 and assignments serving as an oath or declaration under 37 CFR 1.63(e))*
   a. ☐ Newly executed (original or copy)
   b. ☑ A copy from a prior application (37 CFR 1.63(d))
7. ☑ **Application Data Sheet** ** See note below.* See 37 CFR 1.76 (PTO/AIA/14 or equivalent)
8. **CD-ROM or CD-R** in duplicate, large table, or Computer Program (*Appendix*)
   ☐ Landscape Table on CD
9. **Nucleotide and/or Amino Acid Sequence Submission** (*if applicable, items a. – c. are required*)
   a. ☐ Computer Readable Form (CRF)
   b. ☐ Specification Sequence Listing on:
      i. ☐ CD-ROM or CD-R (2 copies); or
      ii. ☐ Paper
   c. ☐ Statements verifying identity of above copies

ADDRESS TO: **Commissioner for Patents**
P.O. Box 1450
Alexandria, VA 22313-1450

ACCOMPANYING APPLICATION PAPERS

10. ☐ **Assignment Papers** (cover sheet & document(s))
    Name of Assignee _____
11. ☐ **37 CFR 3.73(c) Statement** (*when there is an assignee*) ☐ **Power of Attorney**
12. ☐ **English Translation Document** (*if applicable*)
13. ☐ **Information Disclosure Statement** (PTO/SB/08 or PTO-1449)
    ☐ Copies of citations attached
14. ☐ **Preliminary Amendment**
15. ☐ **Return Receipt Postcard** (*MPEP § 503*) (*Should be specifically itemized*)
16. ☐ **Certified Copy of Priority Document(s)** (*if foreign priority is claimed*)
17. ☐ **Nonpublication Request** Under 35 U.S.C. 122(b)(2)(B)(i). Applicant must attach form PTO/SB/35 or equivalent.
18. ☐ **Other:** _____

***Note**: (1) Benefit claims under 37 CFR 1.78 and foreign priority claims under 1.55 **must** be included in an Application Data Sheet (ADS).
(2) For applications filed under 35 U.S.C. 111, the application must contain an ADS specifying the applicant if the applicant is an assignee, person to whom the inventor is under an obligation to assign, or person who otherwise shows sufficient proprietary interest in the matter. See 37 CFR 1.46(b).

19. CORRESPONDENCE ADDRESS

☑ The address associated with Customer Number: 91764 **OR** ☐ Correspondence address below

Name					
Address					
City		State		Zip Code	
Country		Telephone		Email	

Signature	/Robert T. Neufeld/	Date	11-13-2017
Name (Print/Type)	Robert T. Neufeld	Registration No. (Attorney/Agent)	48394

This collection of information is required by 37 CFR 1.53(b). The information is required to obtain or retain a benefit by the public which is to file (and by the USPTO to process) an application. Confidentiality is governed by 35 U.S.C. 122 and 37 CFR 1.11 and 1.14. This collection is estimated to take 12 minutes to complete, including gathering, preparing, and submitting the completed application form to the USPTO. Time will vary depending upon the individual case. Any comments on the amount of time you require to complete this form and/or suggestions for reducing this burden, should be sent to the Chief Information Officer, U.S. Patent and Trademark Office, U.S. Department of Commerce, P.O. Box 1450, Alexandria, VA 22313-1450. DO NOT SEND FEES OR COMPLETED FORMS TO THIS ADDRESS. **SEND TO: Commissioner for Patents, P.O. Box 1450, Alexandria, VA 22313-1450.**
If you need assistance in completing the form, call 1-800-PTO-9199 and select option 2.

Privacy Act Statement

The **Privacy Act of 1974 (P.L. 93-579)** requires that you be given certain information in connection with your submission of the attached form related to a patent application or patent. Accordingly, pursuant to the requirements of the Act, please be advised that: (1) the general authority for the collection of this information is 35 U.S.C. 2(b)(2); (2) furnishing of the information solicited is voluntary; and (3) the principal purpose for which the information is used by the U.S. Patent and Trademark Office is to process and/or examine your submission related to a patent application or patent. If you do not furnish the requested information, the U.S. Patent and Trademark Office may not be able to process and/or examine your submission, which may result in termination of proceedings or abandonment of the application or expiration of the patent.

The information provided by you in this form will be subject to the following routine uses:

1. The information on this form will be treated confidentially to the extent allowed under the Freedom of Information Act (5 U.S.C. 552) and the Privacy Act (5 U.S.C 552a). Records from this system of records may be disclosed to the Department of Justice to determine whether disclosure of these records is required by the Freedom of Information Act.
2. A record from this system of records may be disclosed, as a routine use, in the course of presenting evidence to a court, magistrate, or administrative tribunal, including disclosures to opposing counsel in the course of settlement negotiations.
3. A record in this system of records may be disclosed, as a routine use, to a Member of Congress submitting a request involving an individual, to whom the record pertains, when the individual has requested assistance from the Member with respect to the subject matter of the record.
4. A record in this system of records may be disclosed, as a routine use, to a contractor of the Agency having need for the information in order to perform a contract. Recipients of information shall be required to comply with the requirements of the Privacy Act of 1974, as amended, pursuant to 5 U.S.C. 552a(m).
5. A record related to an International Application filed under the Patent Cooperation Treaty in this system of records may be disclosed, as a routine use, to the International Bureau of the World Intellectual Property Organization, pursuant to the Patent Cooperation Treaty.
6. A record in this system of records may be disclosed, as a routine use, to another federal agency for purposes of National Security review (35 U.S.C. 181) and for review pursuant to the Atomic Energy Act (42 U.S.C. 218(c)).
7. A record from this system of records may be disclosed, as a routine use, to the Administrator, General Services, or his/her designee, during an inspection of records conducted by GSA as part of that agency's responsibility to recommend improvements in records management practices and programs, under authority of 44 U.S.C. 2904 and 2906. Such disclosure shall be made in accordance with the GSA regulations governing inspection of records for this purpose, and any other relevant (*i.e.*, GSA or Commerce) directive. Such disclosure shall not be used to make determinations about individuals.
8. A record from this system of records may be disclosed, as a routine use, to the public after either publication of the application pursuant to 35 U.S.C. 122(b) or issuance of a patent pursuant to 35 U.S.C. 151. Further, a record may be disclosed, subject to the limitations of 37 CFR 1.14, as a routine use, to the public if the record was filed in an application which became abandoned or in which the proceedings were terminated and which application is referenced by either a published application, an application open to public inspection or an issued patent.
9. A record from this system of records may be disclosed, as a routine use, to a Federal, State, or local law enforcement agency, if the USPTO becomes aware of a violation or potential violation of law or regulation.

PTO/AIA/14 (11-15)
Approved for use through 04/30/2017. OMB 0651-0032
U.S. Patent and Trademark Office; U.S. DEPARTMENT OF COMMERCE
Under the Paperwork Reduction Act of 1995, no persons are required to respond to a collection of information unless it contains a valid OMB control number.

Application Data Sheet 37 CFR 1.76	Attorney Docket Number	13682.227107
	Application Number	
Title of Invention	Configurable Lighting System	

The application data sheet is part of the provisional or nonprovisional application for which it is being submitted. The following form contains the bibliographic data arranged in a format specified by the United States Patent and Trademark Office as outlined in 37 CFR 1.76.
This document may be completed electronically and submitted to the Office in electronic format using the Electronic Filing System (EFS) or the document may be printed and included in a paper filed application.

Secrecy Order 37 CFR 5.2:

☐ Portions or all of the application associated with this Application Data Sheet may fall under a Secrecy Order pursuant to 37 CFR 5.2 (Paper filers only. Applications that fall under Secrecy Order may not be filed electronically.)

Inventor Information:

Inventor 1 Remove

Legal Name

Prefix	Given Name	Middle Name	Family Name	Suffix
	Steven	Walter	Pyshos	

Residence Information (Select One) ● US Residency Non US Residency Active US Military Service

City	Peachtree City	State/Province	GA	Country of Residence i	US

Mailing Address of Inventor:

Address 1	326 Loring Lane
Address 2	
City	Peachtree City
State/Province	GA
Postal Code	30269
Country i	US

Inventor 2 Remove

Legal Name

Prefix	Given Name	Middle Name	Family Name	Suffix
	Raymond		Janik	

Residence Information (Select One) ◉ US Residency Non US Residency Active US Military Service

City	Fayetteville	State/Province	GA	Country of Residence i	US

Mailing Address of Inventor:

Address 1	155 Cheshire Chase
Address 2	
City	Fayetteville
State/Province	GA
Postal Code	30215
Country i	US

Inventor 3 Remove

Legal Name

Prefix	Given Name	Middle Name	Family Name	Suffix
	Kevin	Roy	Harpenau	

Residence Information (Select One) ◉ US Residency Non US Residency Active US Military Service

Under the Paperwork Reduction Act of 1995, no persons are required to respond to a collection of information unless it contains a valid OMB control number.

Application Data Sheet 37 CFR 1.76	Attorney Docket Number	13682.227107
	Application Number	
Title of Invention	Configurable Lighting System	

City	Atlanta	State/Province	GA	Country of Residence i	US

Mailing Address of Inventor:

Address 1	701 Highland Ave. NE, Apt. 1511		
Address 2			
City	Atlanta	**State/Province**	GA
Postal Code	30312	**Country** i	US

All Inventors Must Be Listed - Additional Inventor Information blocks may be generated within this form by selecting the **Add** button. Add

Correspondence Information:

Enter either Customer Number or complete the Correspondence Information section below. For further information see 37 CFR 1.33(a).

☐ **An Address is being provided for the correspondence Information of this application.**

Customer Number	91764		
Email Address	jvillegas@kslaw.com	Add Email	Remove Email

Application Information:

Title of the Invention	Configurable Lighting System		
Attorney Docket Number	13682.227107	**Small Entity Status Claimed**	☐
Application Type	Nonprovisional		
Subject Matter	Utility		
Total Number of Drawing Sheets (if any)	10	**Suggested Figure for Publication (if any)**	

Filing By Reference:

Only complete this section when filing an application by reference under 35 U.S.C. 111(c) and 37 CFR 1.57(a). Do not complete this section if application papers including a specification and any drawings are being filed. Any domestic benefit or foreign priority information must be provided in the appropriate section(s) below (i.e., "Domestic Benefit/National Stage Information" and "Foreign Priority Information").

For the purposes of a filing date under 37 CFR 1.53(b), the description and any drawings of the present application are replaced by this reference to the previously filed application, subject to conditions and requirements of 37 CFR 1.57(a).

Application number of the previously filed application	Filing date (YYYY-MM-DD)	Intellectual Property Authority or Country i

Publication Information:

☐ Request Early Publication (Fee required at time of Request 37 CFR 1.219)

☐ **Request Not to Publish.** I hereby request that the attached application not be published under 35 U.S.C. 122(b) and certify that the invention disclosed in the attached application **has not and will not** be the subject of an application filed in another country, or under a multilateral international agreement, that requires publication at eighteen months after filing.

Under the Paperwork Reduction Act of 1995, no persons are required to respond to a collection of information unless it contains a valid OMB control number.

Application Data Sheet 37 CFR 1.76	Attorney Docket Number	13682.227107
	Application Number	
Title of Invention	Configurable Lighting System	

Representative Information:

Representative information should be provided for all practitioners having a power of attorney in the application. Providing this information in the Application Data Sheet does not constitute a power of attorney in the application (see 37 CFR 1.32).
Either enter Customer Number or complete the Representative Name section below. If both sections are completed the customer Number will be used for the Representative Information during processing.

Please Select One:	● Customer Number	US Patent Practitioner	◯ Limited Recognition (37 CFR 11.9)
Customer Number	91764		

Domestic Benefit/National Stage Information:

This section allows for the applicant to either claim benefit under 35 U.S.C. 119(e), 120, 121, 365(c), or 386(c) or indicate National Stage entry from a PCT application. Providing benefit claim information in the Application Data Sheet constitutes the specific reference required by 35 U.S.C. 119(e) or 120, and 37 CFR 1.78.
When referring to the current application, please leave the "Application Number" field blank.

Prior Application Status	Pending		Remove
Application Number	Continuity Type	Prior Application Number	Filing or 371(c) Date (YYYY-MM-DD)
	Continuation of	15/435141	2017-02-16
Prior Application Status	Expired		Remove
Application Number	Continuity Type	Prior Application Number	Filing or 371(c) Date (YYYY-MM-DD)
15/435141	Claims benefit of provisional	62/297424	2016-02-19

Additional Domestic Benefit/National Stage Data may be generated within this form by selecting the **Add** button. Add

Foreign Priority Information:

This section allows for the applicant to claim priority to a foreign application. Providing this information in the application data sheet constitutes the claim for priority as required by 35 U.S.C. 119(b) and 37 CFR 1.55. When priority is claimed to a foreign application that is eligible for retrieval under the priority document exchange program (PDX)[1] the information will be used by the Office to automatically attempt retrieval pursuant to 37 CFR 1.55(i)(1) and (2). Under the PDX program, applicant bears the ultimate responsibility for ensuring that a copy of the foreign application is received by the Office from the participating foreign intellectual property office, or a certified copy of the foreign priority application is filed, within the time period specified in 37 CFR 1.55(g)(1).

Under the Paperwork Reduction Act of 1995, no persons are required to respond to a collection of information unless it contains a valid OMB control number.

Application Data Sheet 37 CFR 1.76	Attorney Docket Number	13682.227107
	Application Number	
Title of Invention	Configurable Lighting System	

Remove

Application Number	Country[i]	Filing Date (YYYY-MM-DD)	Access Code[j] (if applicable)

Additional Foreign Priority Data may be generated within this form by selecting the **Add** button. Add

Statement under 37 CFR 1.55 or 1.78 for AIA (First Inventor to File) Transition Applications

☐ This application (1) claims priority to or the benefit of an application filed before March 16, 2013 and (2) also contains, or contained at any time, a claim to a claimed invention that has an effective filing date on or after March 16, 2013.
NOTE: By providing this statement under 37 CFR 1.55 or 1.78, this application, with a filing date on or after March 16, 2013, will be examined under the first inventor to file provisions of the AIA.

Application Data Sheet 37 CFR 1.76	Attorney Docket Number	13682.227107
	Application Number	
Title of Invention	Configurable Lighting System	

Authorization or Opt-Out of Authorization to Permit Access:

When this Application Data Sheet is properly signed and filed with the application, applicant has provided written authority to permit a participating foreign intellectual property (IP) office access to the instant application-as-filed (see paragraph A in subsection 1 below) and the European Patent Office (EPO) access to any search results from the instant application (see paragraph B in subsection 1 below).

Should applicant choose not to provide an authorization identified in subsection 1 below, applicant **must opt-out** of the authorization by checking the corresponding box A or B or both in subsection 2 below.

NOTE: This section of the Application Data Sheet is **ONLY** reviewed and processed with the **INITIAL** filing of an application. After the initial filing of an application, an Application Data Sheet cannot be used to provide or rescind authorization for access by a foreign IP office(s). Instead, Form PTO/SB/39 or PTO/SB/69 must be used as appropriate.

1. Authorization to Permit Access by a Foreign Intellectual Property Office(s)

A. Priority Document Exchange (PDX) - Unless box A in subsection 2 (opt-out of authorization) is checked, the undersigned hereby **grants the USPTO authority** to provide the European Patent Office (EPO), the Japan Patent Office (JPO), the Korean Intellectual Property Office (KIPO), the State Intellectual Property Office of the People's Republic of China (SIPO), the World Intellectual Property Organization (WIPO), and any other foreign intellectual property office participating with the USPTO in a bilateral or multilateral priority document exchange agreement in which a foreign application claiming priority to the instant patent application is filed, access to: (1) the instant patent application-as-filed and its related bibliographic data, (2) any foreign or domestic application to which priority or benefit is claimed by the instant application and its related bibliographic data, and (3) the date of filing of this Authorization. See 37 CFR 1.14(h)(1).

B. Search Results from U.S. Application to EPO - Unless box B in subsection 2 (opt-out of authorization) is checked, the undersigned hereby **grants the USPTO authority** to provide the EPO access to the bibliographic data and search results from the instant patent application when a European patent application claiming priority to the instant patent application is filed. See 37 CFR 1.14(h)(2).

The applicant is reminded that the EPO's Rule 141(1) EPC (European Patent Convention) requires applicants to submit a copy of search results from the instant application without delay in a European patent application that claims priority to the instant application.

2. Opt-Out of Authorizations to Permit Access by a Foreign Intellectual Property Office(s)

☐ A. Applicant **DOES NOT** authorize the USPTO to permit a participating foreign IP office access to the instant application-as-filed. If this box is checked, the USPTO will not be providing a participating foreign IP office with any documents and information identified in subsection 1A above.

☐ B. Applicant **DOES NOT** authorize the USPTO to transmit to the EPO any search results from the instant patent application. If this box is checked, the USPTO will not be providing the EPO with search results from the instant application.

NOTE: Once the application has published or is otherwise publicly available, the USPTO may provide access to the application in accordance with 37 CFR 1.14.

Under the Paperwork Reduction Act of 1995, no persons are required to respond to a collection of information unless it contains a valid OMB control number.

Application Data Sheet 37 CFR 1.76	Attorney Docket Number	13682.227107
	Application Number	
Title of Invention	Configurable Lighting System	

Applicant Information:

Providing assignment information in this section does not substitute for compliance with any requirement of part 3 of Title 37 of CFR to have an assignment recorded by the Office.

Applicant 1 Remove

If the applicant is the inventor (or the remaining joint inventor or inventors under 37 CFR 1.45), this section should not be completed. The information to be provided in this section is the name and address of the legal representative who is the applicant under 37 CFR 1.43; or the name and address of the assignee, person to whom the inventor is under an obligation to assign the invention, or person who otherwise shows sufficient proprietary interest in the matter who is the applicant under 37 CFR 1.46. If the applicant is an applicant under 37 CFR 1.46 (assignee, person to whom the inventor is obligated to assign, or person who otherwise shows sufficient proprietary interest) together with one or more joint inventors, then the joint inventor or inventors who are also the applicant should be identified in this section.

Clear

● Assignee	Legal Representative under 35 U.S.C. 117	Joint Inventor
Person to whom the inventor is obligated to assign.	Person who shows sufficient proprietary interest	

If applicant is the legal representative, indicate the authority to file the patent application, the inventor is:

Name of the Deceased or Legally Incapacitated Inventor:

If the Applicant is an Organization check here. ☒

Organization Name	Cooper Technologies Company		
Mailing Address Information For Applicant:			
Address 1	600 Travis Street, Suite 5600		
Address 2			
City	Houston	**State/Province**	TX
Country	US	Postal Code	77002
Phone Number		Fax Number	
Email Address			

Additional Applicant Data may be generated within this form by selecting the Add button. Add

Assignee Information including Non-Applicant Assignee Information:

Providing assignment information in this section does not substitute for compliance with any requirement of part 3 of Title 37 of CFR to have an assignment recorded by the Office.

Under the Paperwork Reduction Act of 1995, no persons are required to respond to a collection of information unless it contains a valid OMB control number.

Application Data Sheet 37 CFR 1.76	Attorney Docket Number	13682.227107
	Application Number	
Title of Invention	Configurable Lighting System	

Assignee 1

Complete this section if assignee information, including non-applicant assignee information, is desired to be included on the patent application publication. An assignee-applicant identified in the "Applicant Information" section will appear on the patent application publication as an applicant. For an assignee-applicant, complete this section only if identification as an assignee is also desired on the patent application publication.

Remove

If the Assignee or Non-Applicant Assignee is an Organization check here. ☐

Prefix	**Given Name**	Middle Name	**Family Name**	Suffix

Mailing Address Information For Assignee including Non-Applicant Assignee:

Address 1			
Address 2			
City		**State/Province**	
Country i		Postal Code	
Phone Number		Fax Number	
Email Address			

Additional Assignee or Non-Applicant Assignee Data may be generated within this form by selecting the Add button. Add

Signature:

Remove

NOTE: This Application Data Sheet must be signed in accordance with 37 CFR 1.33(b). **However, if this Application Data Sheet is submitted with the INITIAL filing of the application and either box A or B is not checked in subsection 2 of the "Authorization or Opt-Out of Authorization to Permit Access" section, then this form must also be signed in accordance with 37 CFR 1.14(c).**

This Application Data Sheet **must** be signed by a patent practitioner if one or more of the applicants is a **juristic entity** (e.g., corporation or association). If the applicant is two or more joint inventors, this form must be signed by a patent practitioner, **all** joint inventors who are the applicant, or one or more joint inventor-applicants who have been given power of attorney (e.g., see USPTO Form PTO/AIA/81) on behalf of **all** joint inventor-applicants.

See 37 CFR 1.4(d) for the manner of making signatures and certifications.

Signature	/Robert T. Neufeld/			Date (YYYY-MM-DD)	2017-11-13
First Name	Robert	Last Name	Neufeld	Registration Number	48394

Additional Signature may be generated within this form by selecting the Add button. Add

Application Data Sheet 37 CFR 1.76	Attorney Docket Number	13682.227107
	Application Number	
Title of Invention	Configurable Lighting System	

This collection of information is required by 37 CFR 1.76. The information is required to obtain or retain a benefit by the public which is to file (and by the USPTO to process) an application. Confidentiality is governed by 35 U.S.C. 122 and 37 CFR 1.14. This collection is estimated to take 23 minutes to complete, including gathering, preparing, and submitting the completed application data sheet form to the USPTO. Time will vary depending upon the individual case. Any comments on the amount of time you require to complete this form and/or suggestions for reducing this burden, should be sent to the Chief Information Officer, U.S. Patent and Trademark Office, U.S. Department of Commerce, P.O. Box 1450, Alexandria, VA 22313-1450. DO NOT SEND FEES OR COMPLETED FORMS TO THIS ADDRESS. **SEND TO: Commissioner for Patents, P.O. Box 1450, Alexandria, VA 22313-1450.**

Privacy Act Statement

The Privacy Act of 1974 (P.L. 93-579) requires that you be given certain information in connection with your submission of the attached form related to a patent application or patent. Accordingly, pursuant to the requirements of the Act, please be advised that: (1) the general authority for the collection of this information is 35 U.S.C. 2(b)(2); (2) furnishing of the information solicited is voluntary; and (3) the principal purpose for which the information is used by the U.S. Patent and Trademark Office is to process and/or examine your submission related to a patent application or patent. If you do not furnish the requested information, the U.S. Patent and Trademark Office may not be able to process and/or examine your submission, which may result in termination of proceedings or abandonment of the application or expiration of the patent.

The information provided by you in this form will be subject to the following routine uses:

1 The information on this form will be treated confidentially to the extent allowed under the Freedom of Information Act (5 U.S.C. 552) and the Privacy Act (5 U.S.C. 552a). Records from this system of records may be disclosed to the Department of Justice to determine whether the Freedom of Information Act requires disclosure of these records.

2. A record from this system of records may be disclosed, as a routine use, in the course of presenting evidence to a court, magistrate, or administrative tribunal, including disclosures to opposing counsel in the course of settlement negotiations.

3 A record in this system of records may be disclosed, as a routine use, to a Member of Congress submitting a request involving an individual, to whom the record pertains, when the individual has requested assistance from the Member with respect to the subject matter of the record.

4. A record in this system of records may be disclosed, as a routine use, to a contractor of the Agency having need for the information in order to perform a contract. Recipients of information shall be required to comply with the requirements of the Privacy Act of 1974, as amended, pursuant to 5 U.S.C. 552a(m).

5. A record related to an International Application filed under the Patent Cooperation Treaty in this system of records may be disclosed, as a routine use, to the International Bureau of the World Intellectual Property Organization, pursuant to the Patent CooperationTreaty.

6. A record in this system of records may be disclosed, as a routine use, to another federal agency for purposes of National Security review (35 U.S.C. 181) and for review pursuant to the Atomic Energy Act (42 U.S.C. 218(c)).

7. A record from this system of records may be disclosed, as a routine use, to the Administrator, General Services, or his/her designee, during an inspection of records conducted by GSA as part of that agency's responsibility to recommend improvements in records management practices and programs, under authority of 44 U.S.C. 2904 and 2906. Such disclosure shall be made in accordance with the GSA regulations governing inspection of records for this purpose, and any other relevant (i.e., GSA or Commerce) directive. Such disclosure shall not be used to make determinations about individuals.

8. A record from this system of records may be disclosed, as a routine use, to the public after either publication of the application pursuant to 35 U.S.C. 122(b) or issuance of a patent pursuant to 35 U.S.C. 151. Further, a record may be disclosed, subject to the limitations of 37 CFR 1.14, as a routine use, to the public if the record was filed in an application which became abandoned or in which the proceedings were terminated and which application is referenced by either a published application, an application open to public inspections or an issued patent.

9. A record from this system of records may be disclosed, as a routine use, to a Federal, State, or local law enforcement agency, if the USPTO becomes aware of a violation or potential violation of law or regulation.

CONFIGURABLE LIGHTING SYSTEM

CROSS REFERENCE TO RELATED APPLICATIONS

The present application is a continuation application of and claims priority to U.S. Patent Application No. 15/435,141, filed February 16, 2017, and titled "Configurable Lighting System," which claims priority to U.S. Provisional Patent Application Number 62/297,424 filed February 19, 2016, and titled "Configurable Lighting System". The entire contents of the foregoing applications are hereby incorporated herein by reference.

TECHNICAL FIELD

Embodiments of the technology relate generally to lighting systems and more specifically to lighting systems that can be readily configured to produce illumination of different color temperatures.

BACKGROUND

For illumination applications, light emitting diodes (LEDs) offer substantial potential benefit associated with their energy efficiency, light quality, and compact size. However, to realize the full potential benefits offered by light emitting diodes, new technologies are needed.

With luminaires that incorporate incandescent or fluorescent technology, some flexibility can be obtained by swapping lamps to meet user preferences. In such luminaires, lamp selection can provide flexibility in terms of correlated color temperature (CCT or color temperature) and light output (lumen output). For example, a compact fluorescent downlight might accept 6-, 32-, and 42-watt lamps in 2700, 3000, and 3500 K CCT. Additionally, changing lamp position and focal point in a reflector of an incandescent or fluorescent fixture can change the fixture spacing criteria (SC) of a luminaire.

Luminex v. Signify
Luminex Exhibit 1021
Page 012

In contrast, conventional light-emitting-diode-based luminaires typically offer reduced flexibility when the luminaire's light-emitting-diode-based light source is permanently attached to the luminaire. Stocking conventional light-emitting-diode-based luminaires at distribution to accommodate multiple configurations that users may desire can entail maintaining a relatively large or cumbersome inventory.

Need is apparent for a technology to provide a light emitting diode system that can adapt to various applications, for example by delivering multiple color temperatures, multiple lumens, and/or multiple photometric distributions. Need further exists for a capability to enable a single luminaire to be stocked at distribution and then quickly configured according to application parameters and deployment dictates. Need further exists for luminaires that are both energy efficient and flexible. A capability addressing one or more such needs, or some other related deficiency in the art, would support improved illumination systems and more widespread utilization of light emitting diodes in lighting applications.

SUMMARY

In some aspects of the disclosure, a system can configure a luminaire for providing illumination of a selected color temperature, a selected lumen output, or a selected photometric distribution based on an input. The input may be field selectable or may be selectable at a distribution center or at a late stage of luminaire manufacture, for example.

In some aspects of the disclosure, the luminaire can comprise at least two light sources having different color temperatures. In a first configuration, the luminaire can produce illumination of a first color temperature using a first one of the light sources. In a second configuration, the luminaire can produce illumination of a second color temperature using a second one of the light sources. In a third configuration, the luminaire can produce illumination of a third color temperature using both of the first and second the light sources. The third color temperature may be between the first and second color temperatures. The value of the third color temperature within a range between the first and second color temperatures can be controlled by manipulating the

Luminex v. Signify
Luminex Exhibit 1021
Page 013

relative amounts of light output by the first and second light sources. That is, adjusting the lumen outputs of the first and second light sources can define the color temperature of the illumination produced by the luminaire in the third configuration.

In some aspects of the disclosure, the luminaire can comprise at least two light sources having different lumen outputs. In a first configuration, the luminaire can produce illumination of a first lumen output using a first one of the light sources. In a second configuration, the luminaire can produce illumination of a second lumen output using a second one of the light sources. In a third configuration, the luminaire can produce illumination of a third lumen output using both of the first and second light sources.

In some aspects of the disclosure, the luminaire can comprise at least two light sources having different photometric distributions. In a first configuration, the luminaire can produce illumination of a first photometric distribution using a first one of the light sources. In a second configuration, the luminaire can produce illumination of a second photometric distribution using a second one of the light sources. In a third configuration, the luminaire can produce illumination of a third photometric distribution using both of the first and second light sources.

In some aspects of the disclosure, a circuit and an associated input to the circuit can configure a luminaire for providing illumination having a selected property, for example a selected color temperature, a selected lumen output, or a selected photometric distribution. The input can be settable to a first number of states. The circuit can map the first number of states into a second number of states that is less than the first number of states. For example, the input can have four states and the circuit can map these four states into three states. The three states can correspond to three different values of the illumination property, for example three different color temperatures, three different lumen outputs, or three different photometric distributions.

The foregoing discussion of controlling illumination is for illustrative purposes only. Various aspects of the present disclosure may be more clearly understood and appreciated from a review of the following text and by reference to the associated drawings and the claims that follow. Other aspects, systems, methods, features,

Luminex v. Signify
Luminex Exhibit 1021
Page 014

advantages, and objects of the present disclosure will become apparent to one with skill in the art upon examination of the following drawings and text. It is intended that all such aspects, systems, methods, features, advantages, and objects are to be included within this description and covered by this application and by the appended claims of the application.

BRIEF DESCRIPTION OF THE DRAWINGS

Figures 1A, 1B, 1C, 1D, 1E, 1F, 1G, 1H, 1I, 1J, and 1K (collectively Figure 1) illustrate views of a luminaire in accordance with some example embodiments of the disclosure.

Figure 2 illustrates a functional block diagram of a circuit that a luminaire can comprise in accordance with some example embodiments of the disclosure.

Figure 3 illustrates a state table for a circuit that a luminaire can comprise in accordance with some example embodiments of the disclosure.

Figure 4 illustrates a schematic of a circuit that a luminaire can comprise in accordance with some example embodiments of the disclosure.

Many aspects of the disclosure can be better understood with reference to the above drawings. The drawings illustrate only example embodiments and are therefore not to be considered limiting of the embodiments described, as other equally effective embodiments are within the scope and spirit of this disclosure. The elements and features shown in the drawings are not necessarily drawn to scale, emphasis instead being placed upon clearly illustrating principles of the embodiments. Additionally, certain dimensions or positionings may be exaggerated to help visually convey certain principles. In the drawings, similar reference numerals among different figures designate like or corresponding, but not necessarily identical, elements.

Luminex v. Signify
Luminex Exhibit 1021
Page 015

DESCRIPTION OF EXAMPLE EMBODIMENTS

In some example embodiments of the disclosure, a luminaire can comprise multiple groups of light emitting diodes of different color temperatures and a constant current power supply for powering the light emitting diodes. The power supply can utilize a switching scheme that can turn each group of light emitting diodes on and off to change the color temperature of the luminaire. In some example embodiments, the power supply can further vary the relative intensities of the light emitting diodes to manipulate the color temperature of the luminaire within a range.

For example, the luminaire can comprise a 3,000 K group of light emitting diodes and a 4,000 K group of light emitting diodes. When only the 3,000 K group is on, the luminaire can deliver 3,000 K illumination. When only the 4,000 K group is on, the luminaire can deliver 4,000 K illumination. When the 3,000 K group and the 4,000 K group are both on, the luminaire can deliver 3,500 K illumination. If the 4,000 K group of light emitting diodes is concurrently operated at a low lumen output and the 3,000 K group is operated at a high lumen output, the luminaire may deliver illumination of another selected color temperature, for example 3,100 K.

In some example embodiments, a controller can adjust lumen output automatically to maintain constant delivered lumens across multiple color temperatures or to suit application requirements. The controller implements the adjustment utilizing programmable driver current and/or via turning on and off various groups of light emitting diodes. Configurable color temperature or lumen output can function in combination with integral dimming, for example to facilitate interface with building automation, sensors, and dimmers.

In some example embodiments, luminaires can achieve an additional level of flexible configuration at a distribution center using interchangeable optics. For example, primary optics can provide medium distribution (e.g. spacing criteria equals 1.0), while a diffuser or concentrator lens can be used to achieve wide distribution (e.g. spacing criteria equals 1.4), and narrow distribution (e.g. spacing criteria equals 0.4).

In some example embodiments, a luminaire's configuration of delivered lumens and color temperatures can be set at the factory, at distribution, or in the field. To meet

Luminex v. Signify
Luminex Exhibit 1021
Page 016

current and emerging code compliance, performance markings on a luminaire can indicate and correspond to the desired setting. Economical, field-installed nameplates can identify the various electrical and optical performance ratings and, when installed, permanently program the delivered lumens and color temperature. Other settings, such as dimming protocols, can likewise be configured. The interface between the nameplate and internal logic can use mechanical, electrical or optical means, for example.

Accordingly, in some embodiments of the disclosure, the technology provides product markings and supports regulatory compliance. For example, nameplates can indicate energy codes and rebate opportunities, for compliance with product labeling and to facilitate compliance confirmation by local authorities who may have jurisdiction.

Some representative embodiments will be further described hereinafter with example reference to the accompanying drawings that describe representative embodiments of the present technology. In the drawings, Figure 1 illustrates views of a representative luminaire 100; Figure 2 illustrates a functional block diagram of a representative circuit 200 that the luminaire 100 can comprise; Figure 3 illustrates a representative state table for the circuit 200; and Figure 4 illustrates a representative schematic for the circuit 200. The technology may, however, be embodied in many different forms and should not be construed as limited to the embodiments set forth herein; rather, these embodiments are provided so that this disclosure will be thorough and complete, and will fully convey the scope of the technology to those appropriately skilled in the art.

Referring now to Figure 1, multiple views of the luminaire 100 are shown. Figure 1A illustrates a side perspective view of the luminaire 100. Figure 1B illustrates a top perspective view of the luminaire 100. Figure 1C illustrates a view of the light-emitting bottom of the luminaire 100, showing a lens 120 in a light-emitting aperture 115 of the luminaire 100. Figure 1D illustrates a view of the light-emitting bottom of the luminaire 100 with the lens 120 removed from the light-emitting aperture 115 of the luminaire. Figure 1E illustrates a view of the light-emitting bottom of the luminaire 100 with the lens 120 and an associated reflector 130 removed from the light-emitting aperture 115 of the luminaire. Figure 1F illustrates a cutaway perspective view of the luminaire 100.

Luminex v. Signify
Luminex Exhibit 1021
Page 017

Figure 1G illustrates another cutaway perspective view of the luminaire 100. Figure 1H illustrates another cutaway view of the luminaire 100. Figures 1I, 1J, and 1K provide detailed views of a portion of the luminaire 100 comprising a cover 126 and an associated access aperture 129 for providing internal access to the luminaire 100. In Figure 1I, the cover 126 is fully removed. In Figure 1J, the cover 126 is positioned adjacent the access aperture 129, for example in connection with attachment or removal of the cover 126. In Figure 1K, the cover 126 is attached to the luminaire 100.

As best seen in the views of Figures 1A and 1B, the illustrated example luminaire 100 is suited for inserting in an aperture in a ceiling to provide overhead lighting. In this example embodiment, the luminaire 100 can be characterized as an overhead light or a recessed ceiling light. Various other indoor and outdoor luminaires that may be mounted in a wide range of orientations can be substituted for the luminaire 100 illustrated in Figure 1.

The illustrated example luminaire 100 of Figure 1 comprises a housing 105 that is circular with a protruding rim 110 that extends circumferentially about the housing 105. When the luminaire 100 is installed in a ceiling aperture, the rim 100 circumscribes and covers the edge of the ceiling aperture for aesthetics, for support, and for blocking of debris from above the ceiling. Hanger clips 102 hold the luminaire 100 in place in installation.

As best illustrated in Figures 1I, 1J, and 1K, the example luminaire 100 comprises an access aperture 129 and an associated cover 126. The access aperture 129 provides access to the interior of the luminaire housing 105, for example in the field and/or during luminaire installation. An installer can remove the cover 126 and manually set a dual inline pin (DIP) switch 131 to configure the luminaire 100 for long-term operation providing illumination with a selected color temperature, a selected lumen output, and/or a selected photometric distribution. As illustrated, the dual inline pin switch 131 is mounted on a circuit board adjacent the access aperture 129, thereby facilitating convenient and efficient access in the field or at a distribution center, for example.

An electrical cable 127 extends through a wiring aperture 103 in the cover 126. The electrical cable 127 terminates in a plug 132 that mates with a receptacle 133 that is

Luminex v. Signify
Luminex Exhibit 1021
Page 018

mounted inside the housing 105 adjacent the access aperture 129 for convenient field access.

As illustrated, the example cover 126 comprises two notches 123, 124 that each receives a respective screw 128 for holding the cover 126 in place. The notch 123 is disposed on the right side of the cover 126 and is sized to receive one of the screws 128. Meanwhile, the notch 124 is disposed on a left side of the cover 126 and is sized to receive the other screw 128.

The left notch 124 and the right notch 123 are oriented so that the cover 126 is rotatable about the right screw 128 when the right screw 128 is loosely disposed in the right notch 123. In other words, cover rotation can occur when the right screw 128 is in the right notch 123 with threads engaged but prior to tightening. In this position, the cover 126 can rotate clockwise about the right screw 128. Thus, the right screw 128 provides an axis of rotation for the cover 126. This clockwise rotation facilitates convenient manipulation of the cover 126 by a person working the cover 126 to cover the access aperture 129, with the screws 128 engaged but not fully tightened. The clockwise rotation of the cover 126 about the right screw 128 provides the person with a capability to slide the left notch 124 of the cover 126 conveniently under the head of the left screw 128. Once the cover 126 is rotated so the left notch 124 is under the head of the left screw 128, the person (for example an installer) can tighten the two screws 128 to secure the cover 126.

To remove the cover 126, the person loosens the two screws 128 and then rotates the cover 126 counterclockwise about the right screw 128 so that the left notch 124 moves out from under the head of the left screw 128. Once the left notch 124 is free from the left screw 128, the installer can pull the right notch 123 out from under the right screw 128 to fully remove the cover 126.

As best seen in the views of Figures 1A, 1C, 1F, and 1G, the lens 120 of the luminaire 100 is positioned adjacent the lower, exit side of the light-emitting aperture 115. As illustrated, the lens 120 can mix and blend light emitted by two groups of light emitting diodes 150, 155, with each group having a different color temperature. In some embodiments, the two groups of light emitting diodes 150, 155 may have color

Luminex v. Signify
Luminex Exhibit 1021
Page 019

temperatures that differ by at least 500 Kelvin, for example. The group of light emitting diodes 150 can be characterized as one light emitting diode light source, while the group of light emitting diodes 155 can be characterized as another light emitting diode light source. Other embodiments of a light emitting diode light source may have a single light emitting diode or more light emitting diodes than the embodiment illustrated in Figure 1. A reflector 130 is disposed in and lines the aperture 115 to guide and manage the emitted light between the light emitting diodes 150, 155 and the lens 120. In some embodiments, an upper lens (not illustrated) replaces the reflector 130.

The light emitting diodes 150, 155 are mounted on a substrate 125, for example a circuit board, and form part of a circuit 200. In the illustrated embodiment, the light emitting diodes 150, 155 are interspersed. In other embodiments, the light emitting diodes 150, 155 may be separated from one another or spatially segregated according to color temperature or other appropriate parameter. As discussed in further detail below, the circuit 200 supplies electricity to the light emitting diodes 150, 155 with a level of flexibility that facilitates multiple configurations suited to different applications and installation parameters.

Turning to Figures 2, 3, and 4, some example embodiments of the circuit 200 will be discussed in further detail with example reference to the luminaire 100. The circuit 200 can be applied to other indoor and outdoor luminaires.

Referring now to Figure 2, this figure illustrates an embodiment of the circuit 200 in an example block diagram form. The circuit 200 comprises a DC power supply 205 for supplying electrical energy that the circuit 200 delivers to the light emitting diodes 150, 155. In an example embodiment, the circuit 200 comprises a light emitting diode driver.

The dual inline pin switch 131 comprises individual switches 210 that provide an input for configuring the luminaire 100 to operate at a selected color temperature. In the illustrated embodiment, the circuit 200 comprises two manual switches 210. Other embodiments may have fewer or more switches 210. In various embodiments, the switches 210 can be mounted to the housing 105 of the luminaire 100, for example within the housing 105 (as illustrated in Figure 1 and discussed above) or on an exterior surface

Luminex v. Signify
Luminex Exhibit 1021
Page 020

of the housing 105. In some embodiments, the switches 210 are mounted on the substrate 125. In some embodiments, the switches 210 are implemented via firmware or may be solid state.

As an alternative to the illustrated dual inline pin switch 131, the input can comprise multiple DIP switches, one or more single in-line pin packages (SIP or SIPP), one or more rocker switches, one or more reed switches, one or more magnetic switches, one or more rotary switches, one or more rotary dials, one or more selectors or selector switches, one or more slide switches, one or more snap switches, one or more thumbwheels, one or more toggles or toggle switches, one or more keys or keypads, or one or more buttons or pushbuttons, to mention a few representative examples without limitation.

As further discussed below, a controller 215 operates the light emitting diodes 150, 155 according to state of the switches 210. In some example embodiments, the controller 215 comprises logic implemented in digital circuitry, for example discrete digital components or integrated circuitry. In some example embodiments, the controller 215 utilizes microprocessor-implemented logic with instructions stored in firmware or other static or non-transitory memory.

In the illustrated embodiment, the outputs of the controller 215 are connected to two MOSFET transistors 160 to control electrical flow through two light emitting diodes 150, 155. The illustrated MOSFET transistors 160 provide one example and can be replaced with other appropriate current control devices or circuits in various embodiments. The switches 210 thus configure the luminaire 100 to operate with either or both of the light emitting diodes 150, 155. The light emitting diodes 150, 155 illustrated in Figure 2 may represent two single light emitting diodes or two groups of light emitting diodes, for example.

Figure 3 illustrates a representative table 300 describing operation of the circuit 100 according to some example embodiments. In the example of Figure 3, the light emitting diode 150 produces light having a color temperature of 3,000 Kelvin, and the light emitting diode 155 produces light having a color temperature of 4,000 Kelvin.

Luminex v. Signify
Luminex Exhibit 1021
Page 021

As shown in the example table 300, when both of the switches 210 are in the on state, the controller 215 causes the light emitting diode 155 to be off and the light emitting diode 150 to be on. Accordingly, the luminaire 100 emits illumination having a color temperature of 3,000 Kelvin.

When both of the switches 210 are in the off state, the controller 215 causes the light emitting diode 155 to be on and the light emitting diode 150 to be off. Accordingly, the luminaire 100 emits illumination having a color temperature of 4,000 Kelvin.

When one of the switches 210 is in the off state and the other of the switches 210 is on the on state, the controller 215 causes the light emitting diode 155 to be on and the light emitting diode 150 to be on. The luminaire 100 thus emits illumination having a color temperature of 3,500 Kelvin. In some other example embodiments, the controller 215 can adjust the light output of one or both of the light emitting diodes 150, 155 to set the color temperature to a specific value with the range of 3,000 to 4,000 Kelvin.

Accordingly, the controller 215 maps the four configurations of the two switches 210 to three states for configuring the two light emitting diodes 150, 155 for permanent or long-term operation. Mapping two switch configurations to a single mode of long-term operation can simplify configuration instructions and reduce errors during field configuration. The resulting configurations support multiple color temperatures of illumination from a single luminaire 100.

Some example embodiments support fewer or more than three states of illumination. For example, in one embodiment, the luminaire 100 comprises three strings of light emitting diodes 150 that have different color temperatures, such as 3,000 Kelvin, 2,700 Kelvin, and 4,000 Kelvin. In this example, in addition to the states illustrated in Figure 3 and discussed above, the switching logic can support a fourth state in which only the 2,700 Kelvin string is on.

Figure 4 illustrates a schematic of an example embodiment of the circuit 200. The schematic of Figure 4 provides one example implementation of the block diagram illustrated in Figure 3.

As illustrated in Figure 4 in schematic form, the circuit 200 conforms to the foregoing discussion of the block diagram format of Figure 3. In Figure 4, the light

Luminex v. Signify
Luminex Exhibit 1021
Page 022

emitting diodes 150, 155 of Figure 3 are respectively represented with groups of light emitting diodes 150, 155. Additionally, the schematic details include a thermal protective switch 305 for guarding against overheating. Figure 4 thus provides one example schematic for an embodiment of the electrical system of the luminaire 100 illustrated in Figure 1 and discussed above.

As will be appreciated by those of ordinary skill, the textual and illustrated disclosure provided herein supports a wide range of embodiments and implementations. In some non-limiting example embodiments of the disclosure, a luminaire can comprise: a housing; a substrate disposed in the housing; a first plurality of light emitting diodes that are mounted to the substrate and that have a first color temperature; a second plurality of light emitting diodes that are mounted to the substrate and that have a second color temperature; and a plurality of manual switches that are disposed at the housing for permanently configuring the luminaire to: provide illumination of the first color temperature by enabling the first plurality of light emitting diodes; provide illumination of the second color temperature by enabling the second plurality of light emitting diodes; and provide illumination of a third color temperature that is between the first color temperature and the second color temperature by enabling the first plurality of light emitting diodes and the second plurality of light emitting diodes.

In some example embodiments of the luminaire, the housing can comprise an aperture that is configured for emitting area illumination, and the substrate is oriented to emit light through the aperture. In some example embodiments of the luminaire, the plurality of manual switches are mounted to the substrate. In some example embodiments of the luminaire, the plurality of manual switches are mounted in the housing. In some example embodiments of the luminaire, the plurality of manual switches are mounted to the housing. In some example embodiments of the luminaire, the plurality of manual switches comprise a dual inline pin (DIP) switch. In some example embodiments of the luminaire, the plurality of manual switches provide two switch states, and each of the two switch states provides illumination of the third color temperature by enabling the first plurality of light emitting diodes and the second plurality of light emitting diodes. In some example embodiments of the luminaire, the housing is circular and comprises a lip configured for extending around an aperture in a

Luminex v. Signify
Luminex Exhibit 1021
Page 023

ceiling. In some example embodiments of the luminaire, the housing comprises a wiring port disposed on a side of the housing. In some example embodiments of the luminaire, the housing comprises a light-emitting aperture in which the substrate is disposed. In some example embodiments, the luminaire further comprises: an aperture disposed at a lower side of the housing; a lens disposed at the aperture for refracting light emitted by the first and second light emitting diodes; and a reflector that is disposed between the lens and the light emitting diodes and that is operative to reflect light between the first and second light emitting diodes and the lens. In some example embodiments of the luminaire, the housing is circular and comprises a lip configured for extending around an aperture in a ceiling. In some example embodiments of the luminaire, the housing comprises a wiring port disposed on a side of the housing. In some example embodiments of the luminaire, the housing forms a cavity associated with the aperture. In some example embodiments of the luminaire, the first and second light source are mounted to a substrate that is disposed at an end of the cavity. In some example embodiments, the luminaire further comprises a reflector that is disposed in the cavity between the lens and the first and second light sources, the reflector operative to reflect light between the first and second light sources and the lens.

Technology for providing a configurable a luminaire has been described. Many modifications and other embodiments of the disclosures set forth herein will come to mind to one skilled in the art to which these disclosures pertain having the benefit of the teachings presented in the foregoing descriptions and the associated drawings. Therefore, it is to be understood that the disclosures are not to be limited to the specific embodiments disclosed and that modifications and other embodiments are intended to be included within the scope of this application. Although specific terms are employed herein, they are used in a generic and descriptive sense only and not for purposes of limitation.

Luminex v. Signify
Luminex Exhibit 1021
Page 024

CLAIMS

What is claimed is:

1. A luminaire comprising:

at least one input settable to one of at least two states, the at least two states comprising a first state and a second state;

a first light source having a first color temperature;

a second light source having a second color temperature; and

a controller connected to the at least one input, the first light source, and the second light source, the controller configured to:

power the first light source when the at least one input is in the first state; and

power the first light source and the second light source when the at least one input is in the second state.

2. The luminaire of Claim 1, wherein the at least one input comprises a first switch and a second switch.

3. The luminaire of Claim 2, wherein the first state comprises the first switch off and the second switch off, and

wherein the second state comprises the first switch on and the second switch off.

4. The luminaire of Claim 3, wherein when the at least one input is set to the first state, the luminaire emits light of the first color temperature, and

wherein when the input is set to the second state, the luminaire emits light of a third color temperature that results from the combination of the first color temperature and the second color temperature.

Luminex v. Signify
Luminex Exhibit 1021
Page 025

5. The luminaire of Claim 1, wherein the first light source comprises a first light emitting diode,

wherein the second light source comprises a second light emitting diode, and

wherein the first color temperature is separated from the second color temperature by no less than 500 Kelvin.

6. The luminaire of Claim 1, wherein the first light source comprises a first bank of light emitting diodes, and

wherein the second light source comprises a second bank of light emitting diodes.

7. The luminaire of Claim 1, wherein the controller comprises digital logic,

wherein the at least one input comprises a dual inline pin (DIP) switch mounted on a circuit board, and

wherein a first configuration of the DIP switch defines the first state and a second configuration of the DIP switch defines the second state.

8. The luminaire of Claim 1, further comprising a housing that encloses the first light source, the second light source, the at least one input, and the controller, the housing comprising:

a first aperture that provides access to the at least one input for setting the at least one input manually to the first state or the second state during luminaire installation; and

a cover covering the aperture and comprising a second aperture that is sized to receive an electrical cable for powering the luminaire.

9. The luminaire of Claim 8, wherein the at least one input comprises a dual inline pin (DIP) switch mounted to the housing adjacent the first aperture, and

wherein the cover further comprises:

Luminex v. Signify
Luminex Exhibit 1021
Page 026

a first notch that is disposed on a first side of the cover and that is sized to receive a first fastener for fastening the cover to the housing; and

a second notch that is disposed on a second side of the cover and that is sized to receive a second fastener for fastening the cover to the housing,

wherein the first notch and the second notch are oriented so that the cover is rotatable about the first fastener when the first fastener is loosely disposed in the first notch, with the second fastener disposable in the second notch during said rotation of the cover.

10. The luminaire of claim 8, wherein the housing further comprises:

a third aperture for emitting light;

a lens disposed within the third aperture; and

a reflector disposed between the lens and the first and second light sources.

Luminex v. Signify
Luminex Exhibit 1021
Page 027

11. A luminaire comprising:

at least one input settable to one of a plurality of states;

a first light source having a first color temperature;

a second light source having a second color temperature;

a third light source having a third color temperature;

a controller coupled to the at least one input, the first light source, the second light source, and the third light source, the controller configured to:

power the first light source and the second light source when the at least one input is in a first state; and

power the first light source and a third light source when the at least one input is in a second state.

12. The luminaire of Claim 11, wherein when the at least one input is in the first state, the luminaire emits light that is a combination of the first color temperature and the second color temperature, and

wherein when the at least one input is in the second state, the luminaire emits light that is a combination of the first color temperature and the third color temperature.

13. The luminaire of Claim 11, wherein the first light source comprises at least one first light emitting diode,

wherein the second light source comprises at least one second light emitting diode,

wherein the third light source comprises at least one third light emitting diode, and wherein at least 300 Kelvin separates the first color temperature and the second color temperature and at least 300 Kelvin separates the second color temperature and the third color temperature.

Luminex v. Signify
Luminex Exhibit 1021
Page 028

14. The luminaire of Claim 11, wherein the at least one input comprises a dual inline pin (DIP) switch mounted on a circuit board, and

wherein a first configuration of the DIP switch defines the first state and a second configuration of the DIP switch defines the second state.

15. The luminaire of Claim 11, further comprising a housing that encloses the first light source, the second light source, the third light source, the at least one input, and the controller, the housing comprising:

a first aperture that provides access to the at least one input for setting the at least one input manually to the first state or the second state during luminaire installation; and

a cover covering the aperture and comprising a second aperture that is sized to receive an electrical cable for powering the luminaire.

Luminex v. Signify
Luminex Exhibit 1021
Page 029

16. A luminaire comprising:

a housing comprising an aperture;

a first light source and a second light source that are mounted in the housing and that are oriented to emit light for area illumination, wherein the first light source has a first color temperature and the second light source has a second color temperature; and

one or more switches that are mounted at the housing and that are operable to configure the luminaire in a first operating configuration, a second operating configuration, and a third operating configuration,

wherein in the first operating configuration, the first light source is active, the second light source is inactive, and the luminaire is configured to emit light of the first color temperature,

wherein in the second operating configuration, the first light source is inactive, the second light source is active, and the luminaire is configured to emit light of the second color temperature, and

wherein in the third operating configuration, the first light source is active, the second light source is active, and the luminaire is configured to emit light of a third color temperature that is between the first color temperature and the second color temperature.

17. The luminaire of Claim 16, wherein the one or more switches have two switch states that each produces the third operating configuration.

18. The luminaire of Claim 16, wherein the first light source comprises at least one light emitting diode, and

wherein the second light source comprises at least one other light emitting diode.

19. The luminaire of Claim 18, wherein the luminaire is configured for mounting to a ceiling,

wherein the housing further comprises a cover sized to cover the aperture, and

Luminex v. Signify
Luminex Exhibit 1021
Page 030

wherein the one or more switches are disposed in the housing adjacent the aperture for access during luminaire installation.

20. The luminaire of Claim 19, wherein the one or more switches comprise a dual inline pin (DIP) switch.

Luminex v. Signify
Luminex Exhibit 1021
Page 031

ABSTRACT OF THE DISCLOSURE

A system can configure a luminaire for providing illumination of a selected color temperature, a selected lumen output, or a selected photometric distribution. The luminaire can comprise at least two light sources that have different illumination characteristics, for example different color temperatures, different lumen outputs, or different photometric distributions. The system can configure the luminaire to operate a first of the two light sources, a second of the two light sources, or both of the light sources based on an input. When the luminaire is configured to operate both of the light sources, the luminaire can produce illumination having a color temperature, a lumen output, or a photometric distribution that is different than either of the two light sources.

Luminex v. Signify
Luminex Exhibit 1021
Page 032

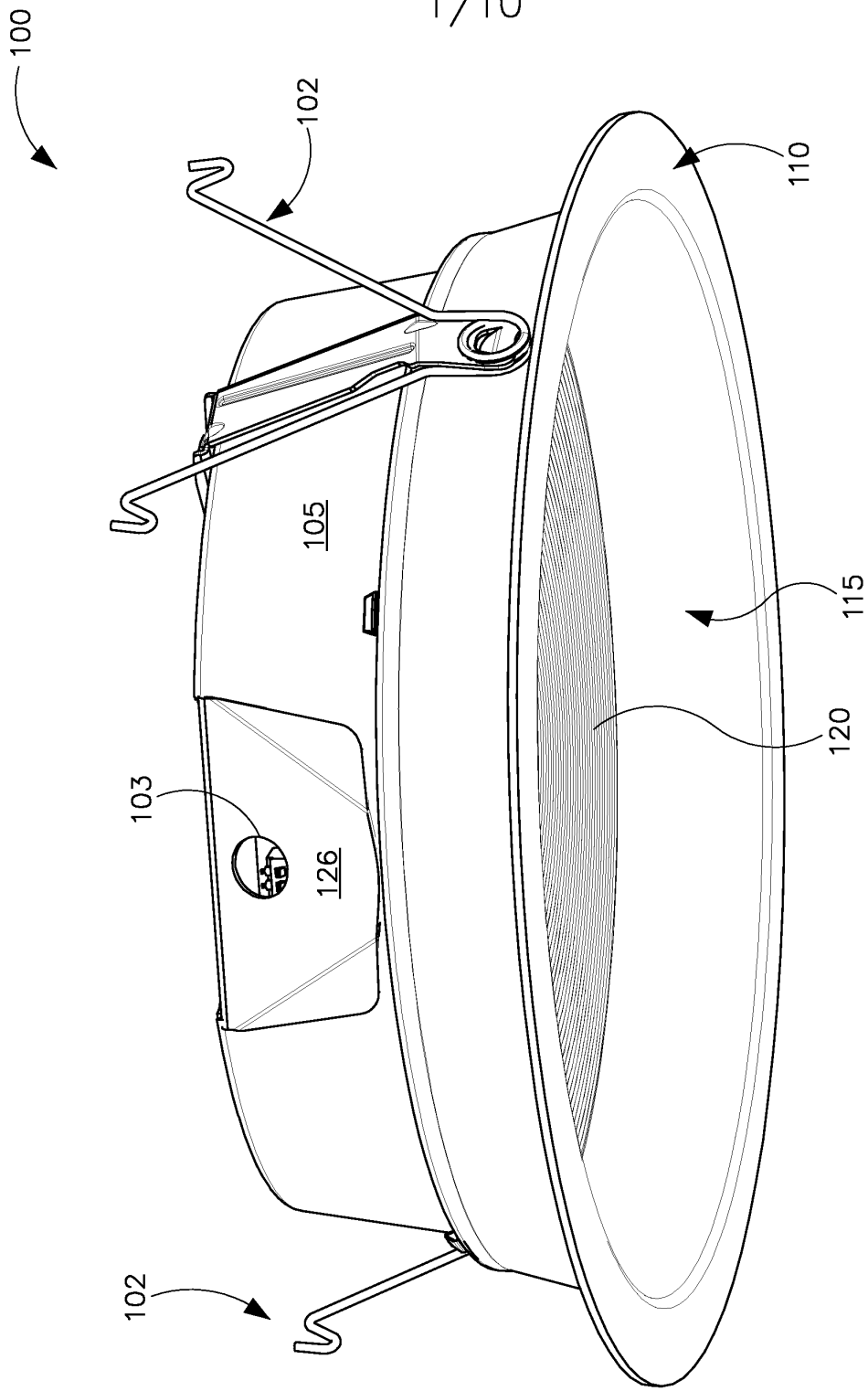

FIG. 1A

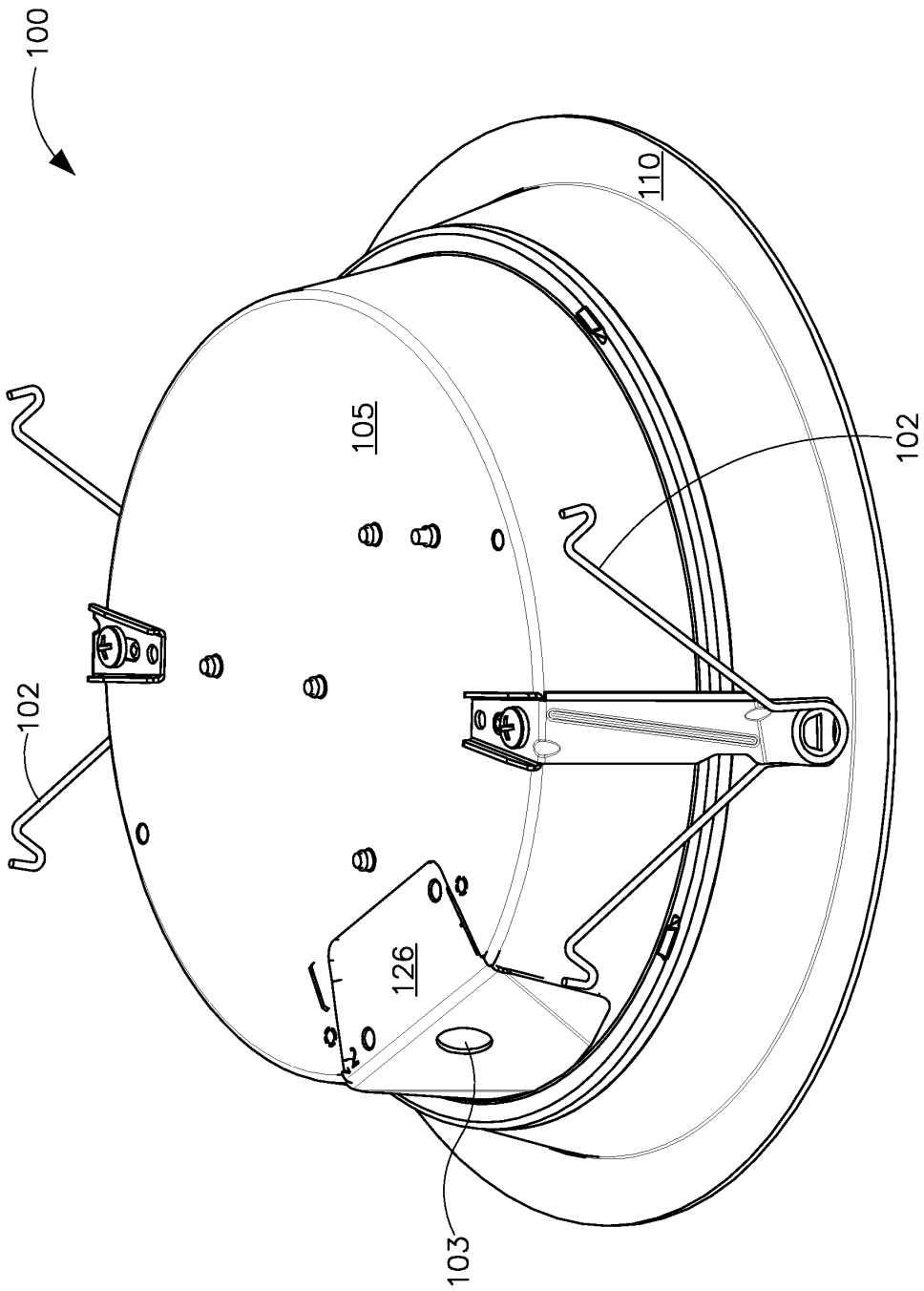

FIG. 1B

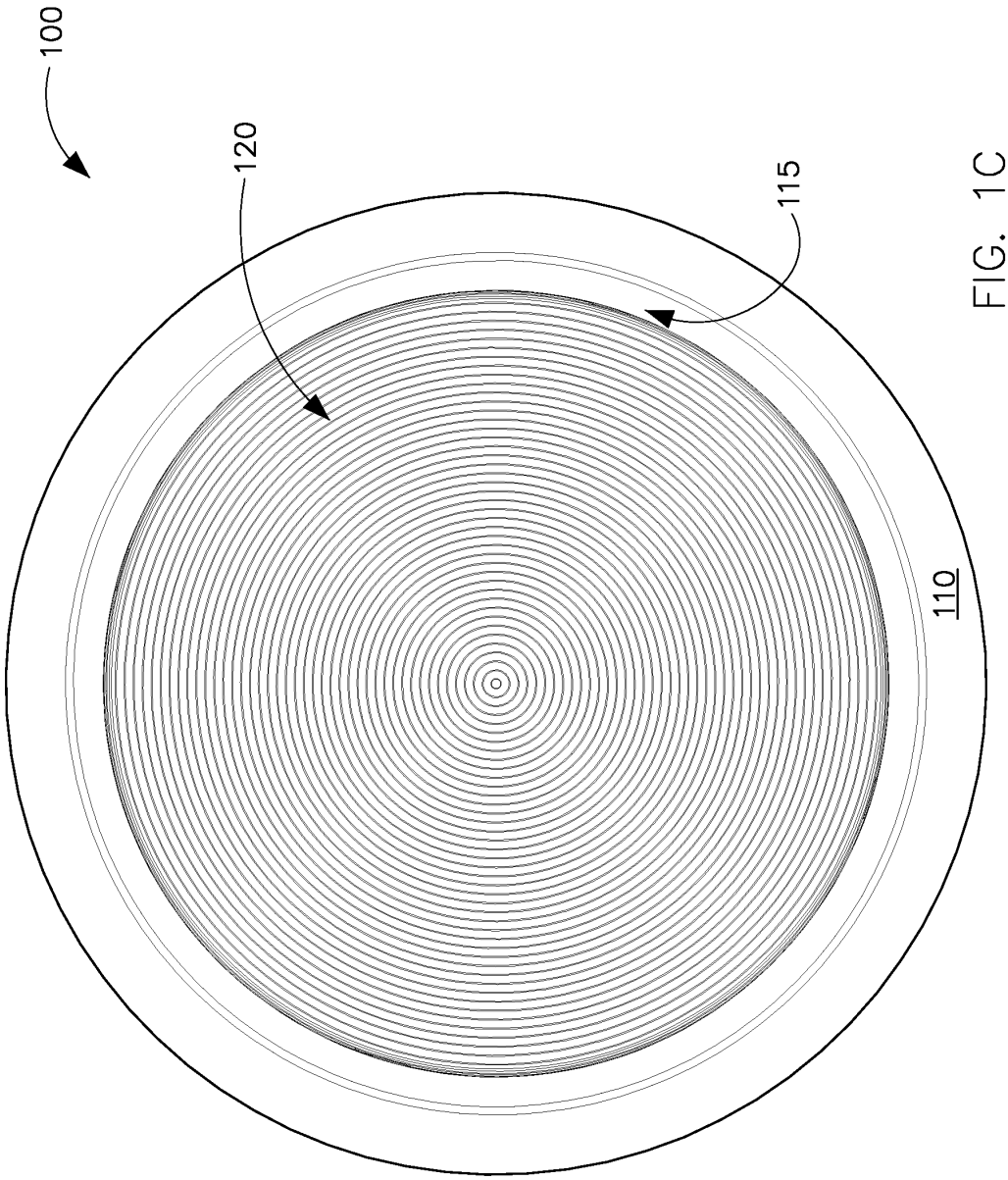

FIG. 1C

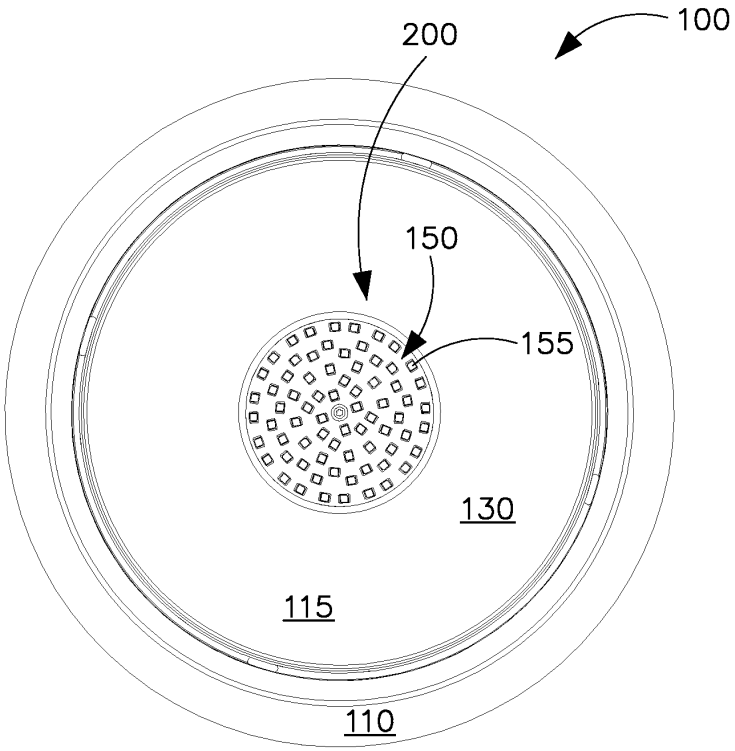

FIG. 1D

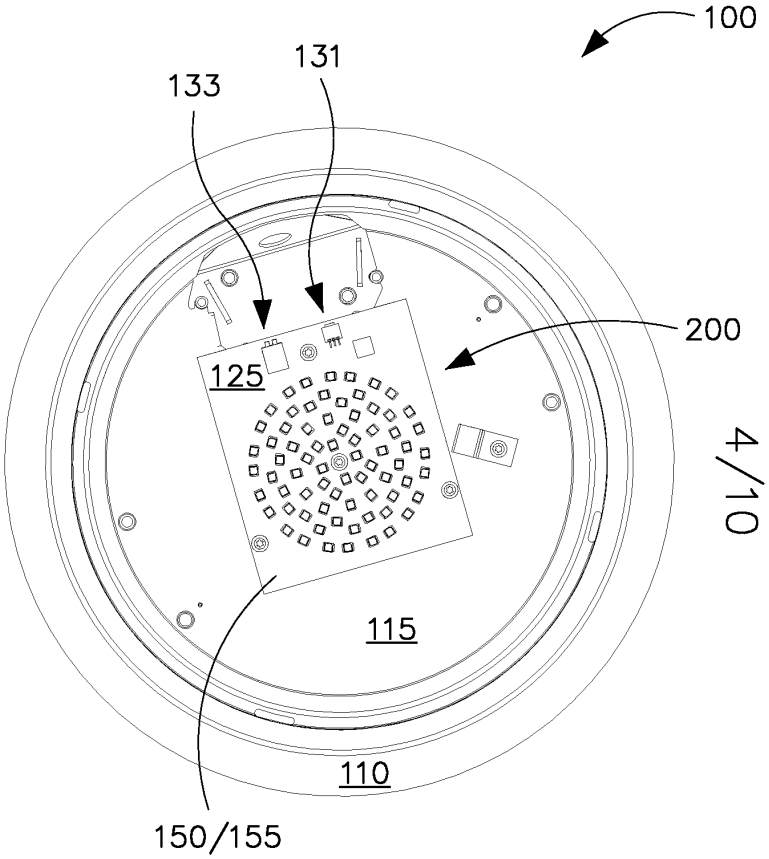

FIG. 1E

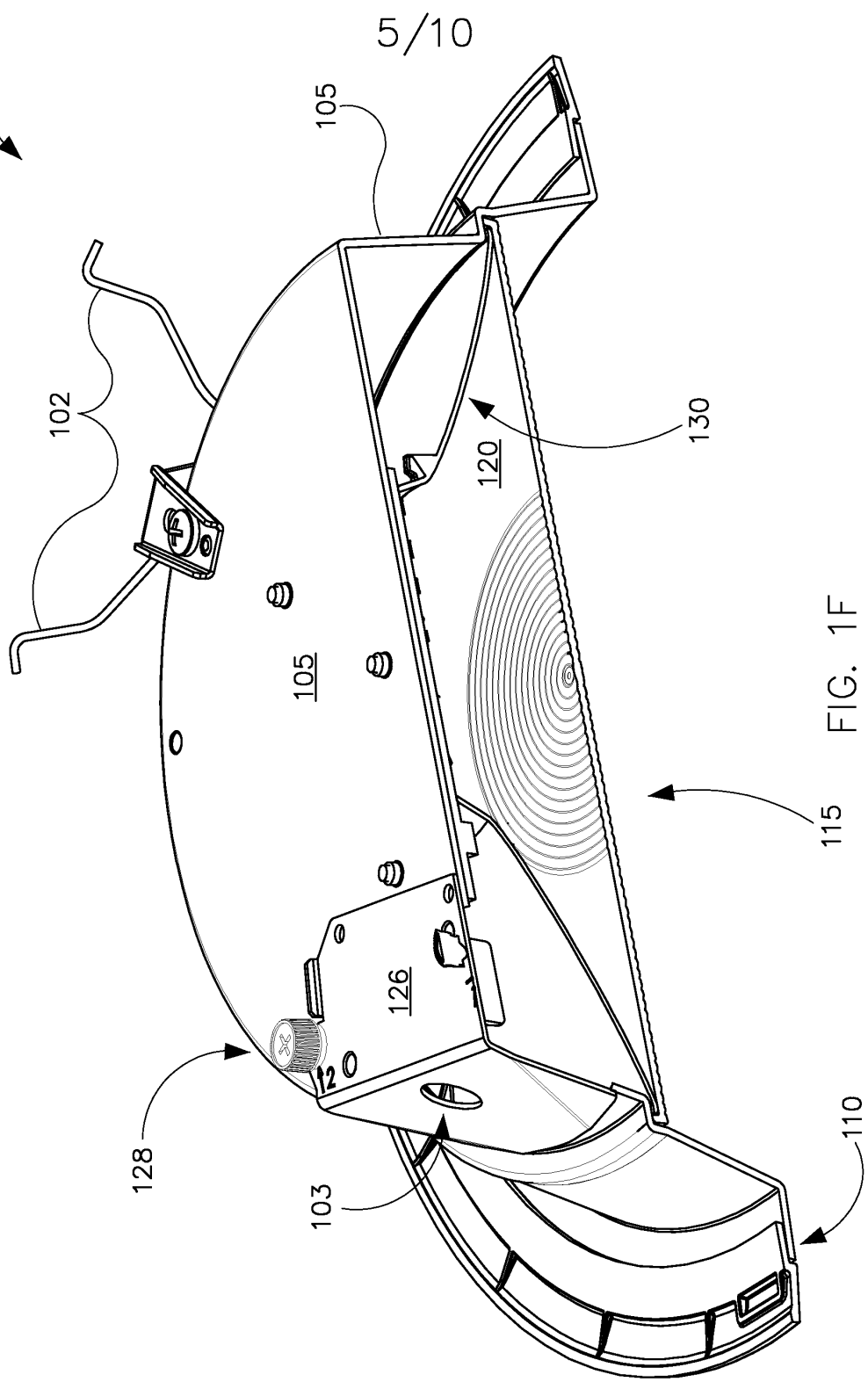

FIG. 1F

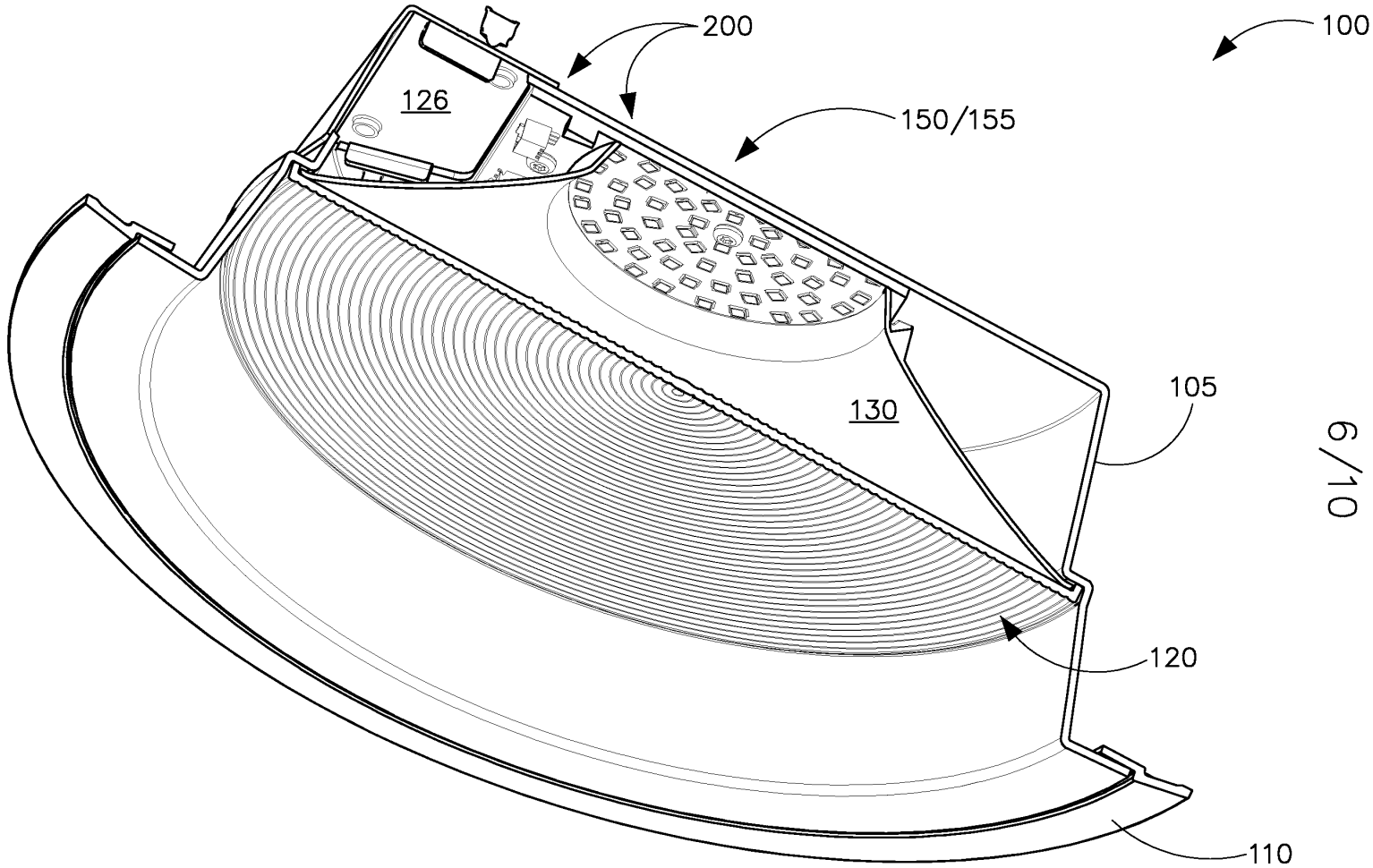

FIG. 1G

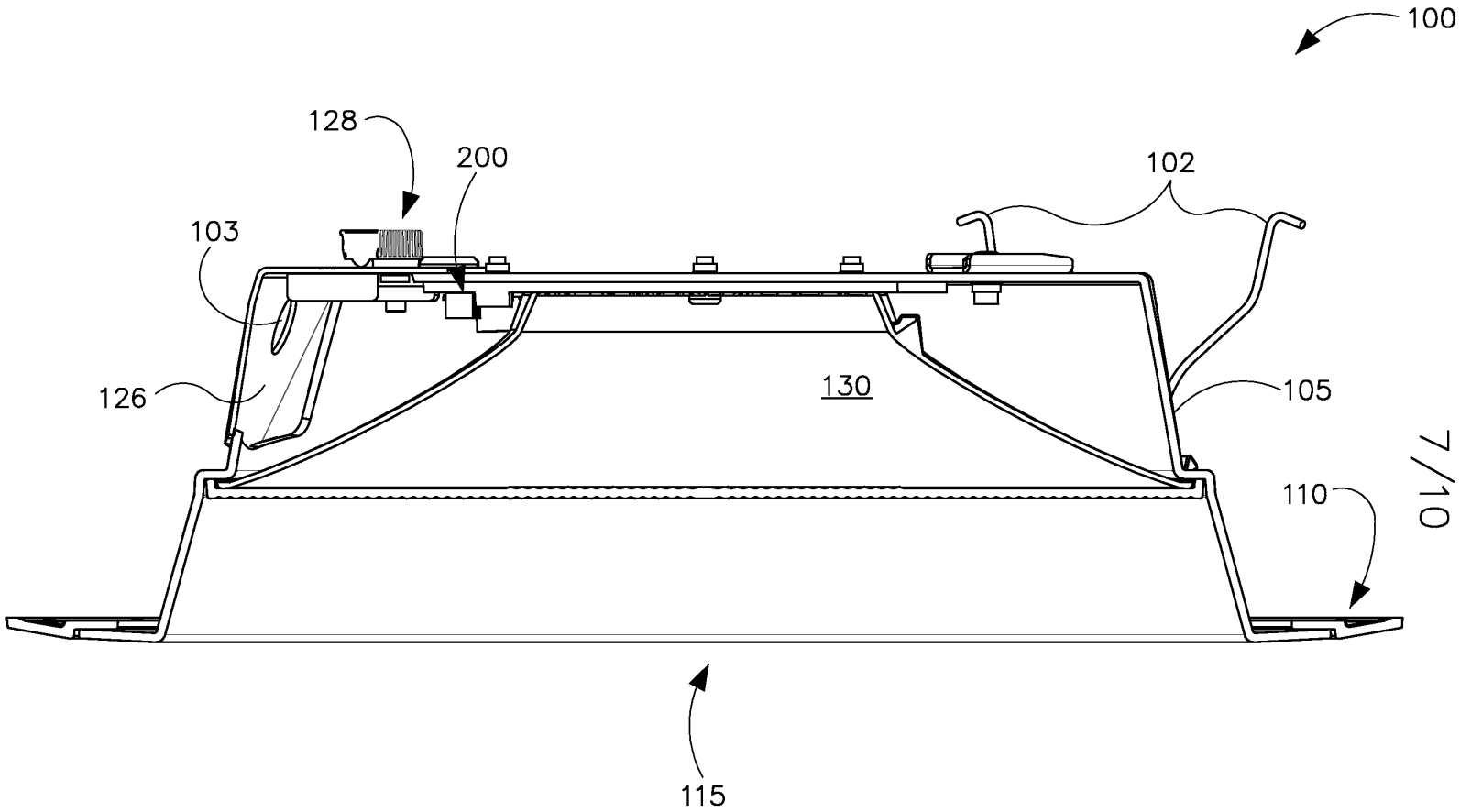

FIG. 1H

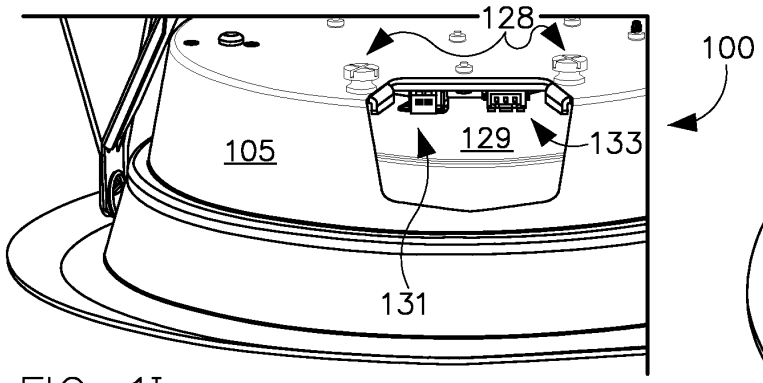

FIG. 1I

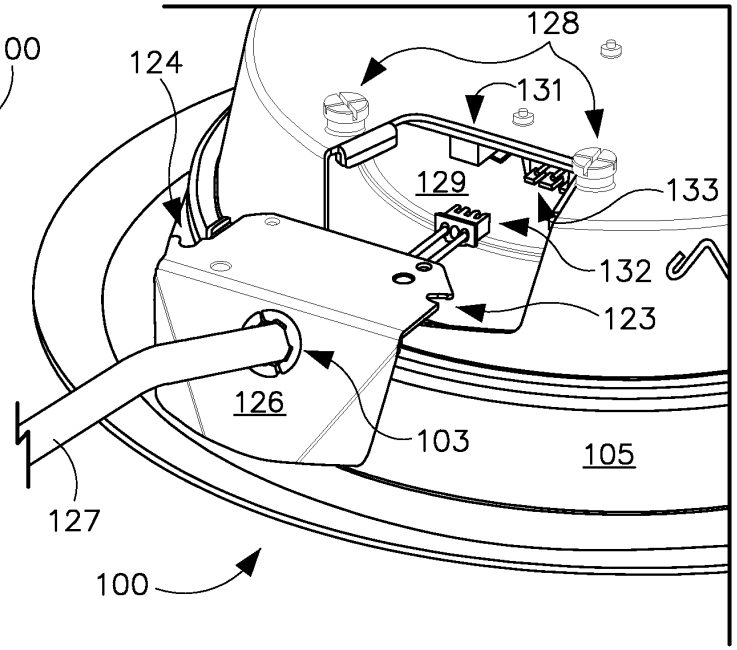

FIG. 1J

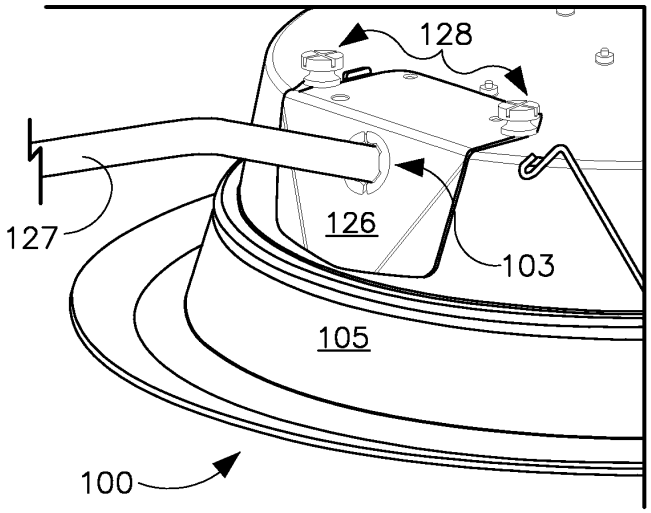

FIG. 1K

FIG. 2

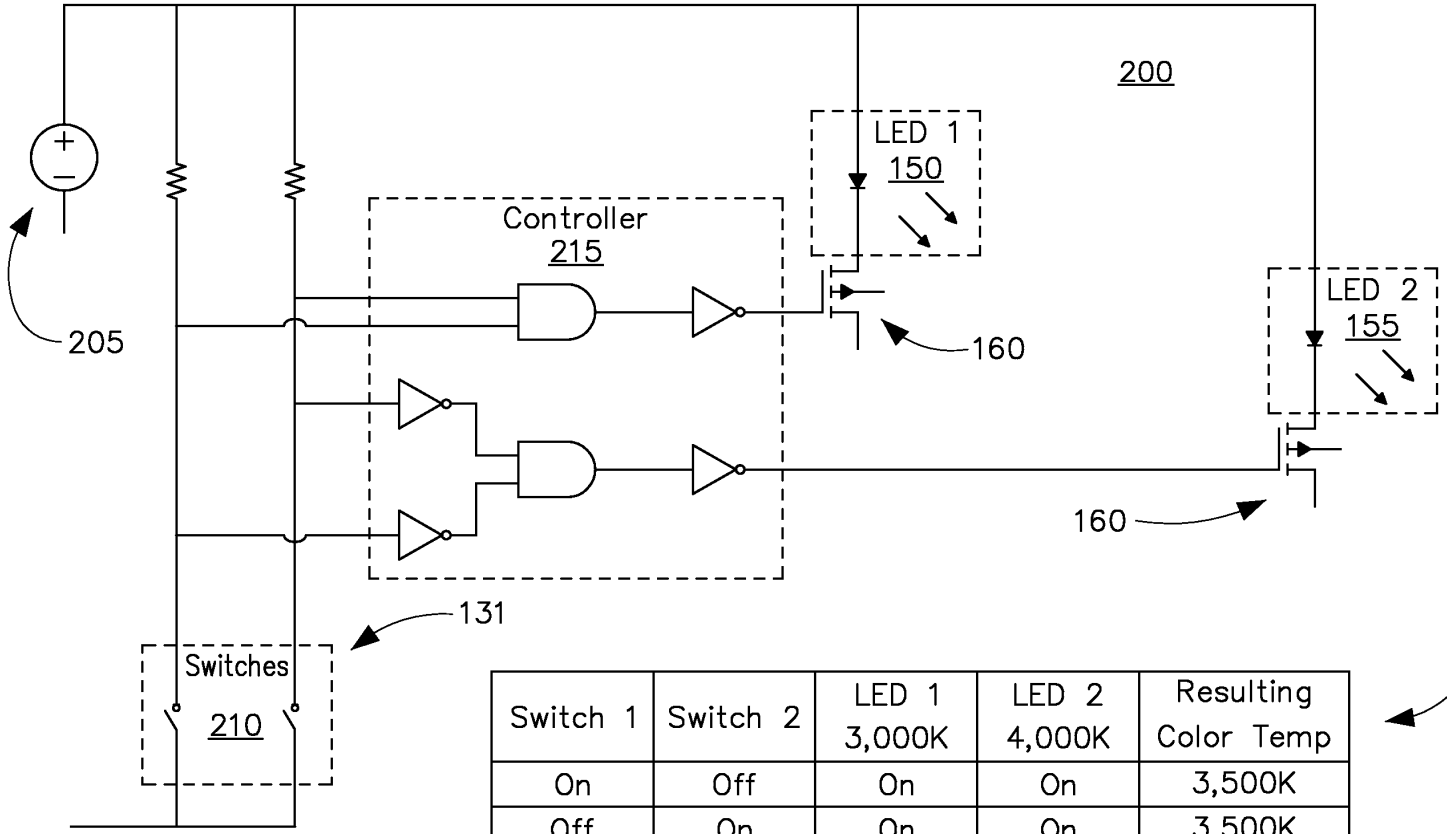

300

Switch 1	Switch 2	LED 1 3,000K	LED 2 4,000K	Resulting Color Temp
On	Off	On	On	3,500K
Off	On	On	On	3,500K
On	On	On	Off	3,000K
Off	Off	Off	On	4,000K

FIG. 3

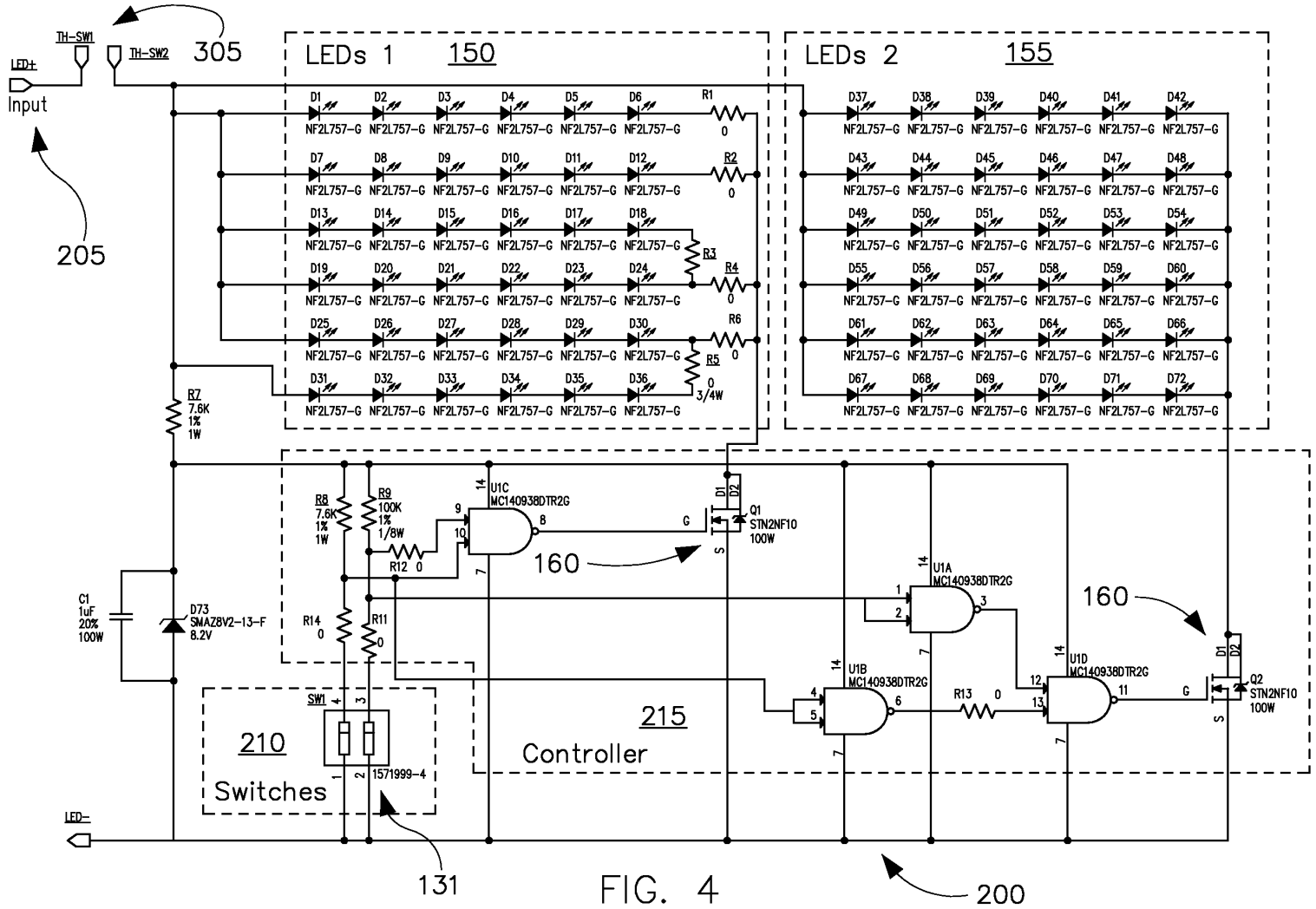
LED+
Input
TH-SW1
TH-SW2
305
205
LEDs 1
150
LEDs 2
155
NF2L757-G
R1
R2
R3
R4
R5
R6
R7
7.6K
1%
1W
R8
7.6K
1%
1W
R9
100K
1%
1/8W
R12
R14
R11
C1
1uF
20%
100W
D73
SMAZ8V2-13-F
8.2V
U1C
MC140938DTR2G
Q1
STN2NF10
100W
160
U1A
MC140938DTR2G
U1B
MC140938DTR2G
U1D
MC140938DTR2G
R13
Q2
STN2NF10
100W
SW1
1571999-4
210
Switches
215
Controller
LED-
131
200

FIG. 4

DECLARATION AND POWER OF ATTORNEY

In re Application of: **Steven Walter Pyshos, Raymond Janik, and Kevin Roy Harpenau**

As a below named inventor, I hereby declare that this declaration is directed to the attached specification titled **"CONFIGURABLE LIGHTING SYSTEM"** to be filed with the U.S. Patent and Trademark Office.

The above-identified application was made or authorized to be made by me. I believe that I am the original inventor or an original joint inventor of a claimed invention in the application.

I hereby state that I have reviewed and understand the contents of the above-identified specification, including the claims, as amended by any amendment referred to above.

I understand that I have a duty of candor and good faith toward the Patent and Trademark Office, and I acknowledge the duty to disclose information which is material to the patentability of the claimed invention of the application in accordance with Title 37, Code of Federal Regulations, § 1.56.

AUTHORIZATION TO PERMIT ACCESS TO APPLICATION BY PARTICIPATING OFFICES

☒ If checked, the undersigned hereby grants the USPTO authority to provide the European Patent Office (EPO), the Japan Patent Office (JPO), and any other intellectual property offices in which a foreign application claiming priority to the above-identified application is filed access to the above-identified patent application. See 37 CFR 1.14(c) and (h). This box should not be checked if the applicant does not wish the EPO, JPO, or other intellectual property office in which a foreign application claiming priority to the above-identified application is filed to have access to the application.
In accordance with 37 CFR 1.14(h)(3), access will be provided to a copy of the application-as-filed with respect to: 1) the above-identified application, 2) any foreign application to which the above-identified application claims priority under 35 USC 119(a)-(d) if a copy of the foreign application that satisfies the certified copy requirement of 37 CFR 1.55 has been filed in the above-identified US application, and 3) any U.S. application from which benefit is sought in the above-identified application.
In accordance with 37 CFR 1.14(c), access may be provided to information concerning the date of filing the Authorization to Permit Access to Application by Participating Offices.

I hereby acknowledge that any willful false statement made in this declaration is punishable under 18 U.S.C. 1001 by fine or imprisonment of not more than five (5) years, or both.

POWER OF ATTORNEY: I hereby appoint the practitioners associated with **Customer Number 91764** to prosecute this application and to transact all business in the Patent and Trademark Office connected therewith.

Send correspondence to: **Customer Number 91764** Direct telephone calls to **(404) 572-4600**

Robert T. Neufeld, Esq.

Full name of joint inventor: **Steven Walter Pyshos**	
Inventor's signature Steven Walter Pyshos	Date: 2/1/17
Residence and Post Office Address: **326 Loring Lane, Peachtree City, Georgia 30269**	

DMSLIBRARY01\29848778.v1

DECLARATION AND POWER OF ATTORNEY

In re Application of: **Steven Walter Pyshos, Raymond Janik, and Kevin Roy Harpenau**

As a below named inventor, I hereby declare that this declaration is directed to the attached specification titled **"CONFIGURABLE LIGHTING SYSTEM"** to be filed with the U.S. Patent and Trademark Office.

The above-identified application was made or authorized to be made by me. I believe that I am the original inventor or an original joint inventor of a claimed invention in the application.

I hereby state that I have reviewed and understand the contents of the above-identified specification, including the claims, as amended by any amendment referred to above.

I understand that I have a duty of candor and good faith toward the Patent and Trademark Office, and I acknowledge the duty to disclose information which is material to the patentability of the claimed invention of the application in accordance with Title 37, Code of Federal Regulations, § 1.56.

AUTHORIZATION TO PERMIT ACCESS TO APPLICATION BY PARTICIPATING OFFICES

☒ If checked, the undersigned hereby grants the USPTO authority to provide the European Patent Office (EPO), the Japan Patent Office (JPO), and any other intellectual property offices in which a foreign application claiming priority to the above-identified application is filed access to the above-identified patent application. See 37 CFR 1.14(c) and (h). This box should not be checked if the applicant does not wish the EPO, JPO, or other intellectual property office in which a foreign application claiming priority to the above-identified application is filed to have access to the application.
In accordance with 37 CFR 1.14(h)(3), access will be provided to a copy of the application-as-filed with respect to: 1) the above-identified application, 2) any foreign application to which the above-identified application claims priority under 35 USC 119(a)-(d) if a copy of the foreign application that satisfies the certified copy requirement of 37 CFR 1.55 has been filed in the above-identified US application, and 3) any U.S. application from which benefit is sought in the above-identified application.
In accordance with 37 CFR 1.14(c), access may be provided to information concerning the date of filing the Authorization to Permit Access to Application by Participating Offices.

I hereby acknowledge that any willful false statement made in this declaration is punishable under 18 U.S.C. 1001 by fine or imprisonment of not more than five (5) years, or both.

POWER OF ATTORNEY: I hereby appoint the practitioners associated with **Customer Number 91764** to prosecute this application and to transact all business in the Patent and Trademark Office connected therewith.

Send correspondence to: **Customer Number 91764** Direct telephone calls to **(404) 572-4600**

Robert T. Neufeld, Esq.

Full name of joint inventor: **Raymond Janik**	
Inventor's signature	Date: 2-1-2017
Residence and Post Office Address: **155 Cheshire Chase, Fayetteville, Georgia 30215**	

Luminex v. Signify
Luminex Exhibit 1021
Page 044

DECLARATION AND POWER OF ATTORNEY

In re Application of: **Steven Walter Pyshos, Raymond Janik, and Kevin Roy Harpenau**

As a below named inventor, I hereby declare that this declaration is directed to the attached specification titled "**CONFIGURABLE LIGHTING SYSTEM**" to be filed with the U.S. Patent and Trademark Office.

The above-identified application was made or authorized to be made by me. I believe that I am the original inventor or an original joint inventor of a claimed invention in the application.

I hereby state that I have reviewed and understand the contents of the above-identified specification, including the claims, as amended by any amendment referred to above.

I understand that I have a duty of candor and good faith toward the Patent and Trademark Office, and I acknowledge the duty to disclose information which is material to the patentability of the claimed invention of the application in accordance with Title 37, Code of Federal Regulations, § 1.56.

AUTHORIZATION TO PERMIT ACCESS TO APPLICATION BY PARTICIPATING OFFICES

☒ If checked, the undersigned hereby grants the USPTO authority to provide the European Patent Office (EPO), the Japan Patent Office (JPO), and any other intellectual property offices in which a foreign application claiming priority to the above-identified application is filed access to the above-identified patent application. See 37 CFR 1.14(c) and (h). This box should not be checked if the applicant does not wish the EPO, JPO, or other intellectual property office in which a foreign application claiming priority to the above-identified application is filed to have access to the application.
In accordance with 37 CFR 1.14(h)(3), access will be provided to a copy of the application-as-filed with respect to: 1) the above-identified application, 2) any foreign application to which the above-identified application claims priority under 35 USC 119(a)-(d) if a copy of the foreign application that satisfies the certified copy requirement of 37 CFR 1.55 has been filed in the above-identified US application, and 3) any U.S. application from which benefit is sought in the above-identified application.
In accordance with 37 CFR 1.14(c), access may be provided to information concerning the date of filing the Authorization to Permit Access to Application by Participating Offices.

I hereby acknowledge that any willful false statement made in this declaration is punishable under 18 U.S.C. 1001 by fine or imprisonment of not more than five (5) years, or both.

POWER OF ATTORNEY: I hereby appoint the practitioners associated with **Customer Number 91764** to prosecute this application and to transact all business in the Patent and Trademark Office connected therewith.

Send correspondence to: **Customer Number 91764** Direct telephone calls to **(404) 572-4600**

Robert T. Neufeld, Esq.

Full name of joint inventor: **Kevin Roy Harpenau**	
Inventor's signature	Date: 2/1/2017
Residence and Post Office Address: **701 Highland Ave. NE, Apt. 1511, Atlanta, Georgia 30312**	

DMSLIBRARY01\29848778.v1

Electronic Acknowledgement Receipt

EFS ID:	30931346
Application Number:	15811062
International Application Number:	
Confirmation Number:	1254
Title of Invention:	Configurable Lighting System
First Named Inventor/Applicant Name:	Steven Walter Pyshos
Customer Number:	91764
Filer:	Robert Timothy Neufeld
Filer Authorized By:	
Attorney Docket Number:	13682.227107
Receipt Date:	13-NOV-2017
Filing Date:	
Time Stamp:	16:44:43
Application Type:	Utility under 35 USC 111(a)

Payment information:

Submitted with Payment	no

File Listing:

Document Number	Document Description	File Name	File Size(Bytes)/ Message Digest	Multi Part /.zip	Pages (if appl.)
1	Transmittal of New Application	transmittal.pdf	276083 c3e3149e45c971eb7d83f3e389c98ba3db70fce3	no	2

Warnings:

Information:					
2	Application Data Sheet	ads.pdf	1823172 7f85415bee0798d3c658e154e1411c1009b03220	no	9
Warnings:					
Information:					
3		spec.pdf	129153 166f684bb8a12accb6b7922f8bd36397bc2244c5	yes	21
	Multipart Description/PDF files in .zip description				
	Document Description		**Start**	**End**	
	Specification		1	13	
	Claims		14	20	
	Abstract		21	21	
Warnings:					
Information:					
4	Drawings-only black and white line drawings	fig.pdf	721641 627a2adc6f202308f5db19d98926b5bd955ce4f4	no	10
Warnings:					
Information:					
5	Oath or Declaration filed	dec.pdf	1979015 c37a34c5fbcacfaf839c892914f38af9ead6a3ca	no	3
Warnings:					
Information:					
		Total Files Size (in bytes):	4929064		

This Acknowledgement Receipt evidences receipt on the noted date by the USPTO of the indicated documents, characterized by the applicant, and including page counts, where applicable. It serves as evidence of receipt similar to a Post Card, as described in MPEP 503.

New Applications Under 35 U.S.C. 111
If a new application is being filed and the application includes the necessary components for a filing date (see 37 CFR 1.53(b)-(d) and MPEP 506), a Filing Receipt (37 CFR 1.54) will be issued in due course and the date shown on this Acknowledgement Receipt will establish the filing date of the application.
National Stage of an International Application under 35 U.S.C. 371
If a timely submission to enter the national stage of an international application is compliant with the conditions of 35 U.S.C. 371 and other applicable requirements a Form PCT/DO/EO/903 indicating acceptance of the application as a national stage submission under 35 U.S.C. 371 will be issued in addition to the Filing Receipt, in due course.
New International Application Filed with the USPTO as a Receiving Office
If a new international application is being filed and the international application includes the necessary components for an international filing date (see PCT Article 11 and MPEP 1810), a Notification of the International Application Number and of the International Filing Date (Form PCT/RO/105) will be issued in due course, subject to prescriptions concerning national security, and the date shown on this Acknowledgement Receipt will establish the international filing date of the application.

UNITED STATES PATENT AND TRADEMARK OFFICE

UNITED STATES DEPARTMENT OF COMMERCE
United States Patent and Trademark Office
Address: COMMISSIONER FOR PATENTS
P.O. Box 1450
Alexandria, Virginia 22313-1450
www.uspto.gov

APPLICATION NUMBER	FILING OR 371(C) DATE	FIRST NAMED APPLICANT	ATTY. DOCKET NO./TITLE
15/811,062	11/13/2017	Steven Walter Pyshos	13682.227107

CONFIRMATION NO. 1254

FORMALITIES LETTER

91764
King & Spalding LLP (Eaton/Cooper)
ATTN: IP Docketing Department
1100 Louisiana Street, Suite 4000
Houston, TX 77002-5213

OC000000095716111

Date Mailed: 11/29/2017

NOTICE TO FILE MISSING PARTS OF NONPROVISIONAL APPLICATION

FILED UNDER 37 CFR 1.53(b)

Filing Date Granted

Items Required To Avoid Abandonment:

An application number and filing date have been accorded to this application. The item(s) indicated below, however, are missing. Applicant is given **TWO MONTHS** from the date of this Notice within which to file all required items below to avoid abandonment. Extensions of time may be obtained by filing a petition accompanied by the extension fee under the provisions of 37 CFR 1.136(a).

- The statutory basic filing fee is missing.
- The application search fee must be submitted.
- The application examination fee must be submitted.
- Surcharge as set forth in 37 CFR 1.16(f) must be submitted.
  The surcharge is due for any one of:
  - late submission of the basic filing fee, search fee, or examination fee,
  - late submission of inventor's oath or declaration,
  - filing an application that does not contain at least one claim on filing, or
  - submission of an application filed by reference to a previously filed application.

SUMMARY OF FEES DUE:

The fee(s) required within **TWO MONTHS** from the date of this Notice to avoid abandonment is/are itemized below. No entity status discount is in effect. If applicant is qualified for small entity status, a written assertion of small entity status must be submitted to establish small entity status. (See 37 CFR 1.27). If applicant is qualified for micro entity status, an acceptable Certification of Micro Entity Status must be submitted to establish micro entity status. (See 37 CFR 1.29 and forms PTO/SB/15A and 15B.)

- $ **280** basic filing fee.
- $ **140** surcharge.
- $ **600** search fee.
- $ **720** examination fee.
- $(**0**) previous unapplied payment amount.
- $ **1740** TOTAL FEE BALANCE DUE.

Luminex v. Signify
Luminex Exhibit 1021
Page 049

Replies must be received in the USPTO within the set time period or must include a proper Certificate of Mailing or Transmission under 37 CFR 1.8 with a mailing or transmission date within the set time period. For more information and a suggested format, see Form PTO/SB/92 and MPEP 512.

Replies should be mailed to:

Mail Stop Missing Parts
Commissioner for Patents
P.O. Box 1450
Alexandria VA 22313-1450

Registered users of EFS-Web may alternatively submit their reply to this notice via EFS-Web, including a copy of this Notice and selecting the document description "Applicant response to Pre-Exam Formalities Notice". https://sportal.uspto.gov/authenticate/AuthenticateUserLocalEPF.html

For more information about EFS-Web please call the USPTO Electronic Business Center at 1-866-217-9197 or visit our website at http://www.uspto.gov/ebc.

If you are not using EFS-Web to submit your reply, you must include a copy of this notice.

Questions about the contents of this notice and the requirements it sets forth should be directed to the Office of Data Management, Application Assistance Unit, at **(571) 272-4000** or **(571) 272-4200** or **1-888-786-0101**.

/mhaile/

PATENT APPLICATION FEE DETERMINATION RECORD Substitute for Form PTO-875	Application or Docket Number 15/811,062

APPLICATION AS FILED - PART I

FOR	(Column 1) NUMBER FILED	(Column 2) NUMBER EXTRA	SMALL ENTITY RATE($)	SMALL ENTITY FEE($)	OR	OTHER THAN SMALL ENTITY RATE($)	OTHER THAN SMALL ENTITY FEE($)
BASIC FEE (37 CFR 1.16(a), (b), or (c))	N/A	N/A	N/A			N/A	280
SEARCH FEE (37 CFR 1.16(k), (i), or (m))	N/A	N/A	N/A			N/A	600
EXAMINATION FEE (37 CFR 1.16(o), (p), or (q))	N/A	N/A	N/A			N/A	720
TOTAL CLAIMS (37 CFR 1.16(i))	20 minus 20 =	*			OR	x 80 =	0.00
INDEPENDENT CLAIMS (37 CFR 1.16(h))	3 minus 3 =	*				x 420 =	0.00
APPLICATION SIZE FEE (37 CFR 1.16(s))	If the specification and drawings exceed 100 sheets of paper, the application size fee due is $310 ($155 for small entity) for each additional 50 sheets or fraction thereof. See 35 U.S.C. 41(a)(1)(G) and 37 CFR 1.16(s).						0.00
MULTIPLE DEPENDENT CLAIM PRESENT (37 CFR 1.16(j))							0.00
* If the difference in column 1 is less than zero, enter "0" in column 2.			TOTAL			TOTAL	1600

APPLICATION AS AMENDED - PART II

		(Column 1) CLAIMS REMAINING AFTER AMENDMENT		(Column 2) HIGHEST NUMBER PREVIOUSLY PAID FOR	(Column 3) PRESENT EXTRA	SMALL ENTITY RATE($)	SMALL ENTITY ADDITIONAL FEE($)	OR	OTHER THAN SMALL ENTITY RATE($)	OTHER THAN SMALL ENTITY ADDITIONAL FEE($)
AMENDMENT A	Total (37 CFR 1.16(i))	*	Minus	**	=	x =		OR	x =	
AMENDMENT A	Independent (37 CFR 1.16(h))	*	Minus	***	=	x =		OR	x =	
AMENDMENT A	Application Size Fee (37 CFR 1.16(s))									
AMENDMENT A	FIRST PRESENTATION OF MULTIPLE DEPENDENT CLAIM (37 CFR 1.16(j))							OR		
						TOTAL ADD'L FEE		OR	TOTAL ADD'L FEE	

		(Column 1) CLAIMS REMAINING AFTER AMENDMENT		(Column 2) HIGHEST NUMBER PREVIOUSLY PAID FOR	(Column 3) PRESENT EXTRA	RATE($)	ADDITIONAL FEE($)	OR	RATE($)	ADDITIONAL FEE($)
AMENDMENT B	Total (37 CFR 1.16(i))	*	Minus	**	=	x =		OR	x =	
AMENDMENT B	Independent (37 CFR 1.16(h))	*	Minus	***	=	x =		OR	x =	
AMENDMENT B	Application Size Fee (37 CFR 1.16(s))									
AMENDMENT B	FIRST PRESENTATION OF MULTIPLE DEPENDENT CLAIM (37 CFR 1.16(j))							OR		
						TOTAL ADD'L FEE		OR	TOTAL ADD'L FEE	

* If the entry in column 1 is less than the entry in column 2, write "0" in column 3.
** If the "Highest Number Previously Paid For" IN THIS SPACE is less than 20, enter "20".
*** If the "Highest Number Previously Paid For" IN THIS SPACE is less than 3, enter "3".
The "Highest Number Previously Paid For" (Total or Independent) is the highest found in the appropriate box in column 1.

UNITED STATES PATENT AND TRADEMARK OFFICE

UNITED STATES DEPARTMENT OF COMMERCE
United States Patent and Trademark Office
Address: COMMISSIONER FOR PATENTS
P.O. Box 1450
Alexandria, Virginia 22313-1450
www.uspto.gov

APPLICATION NUMBER	FILING or 371(c) DATE	GRP ART UNIT	FIL FEE REC'D	ATTY.DOCKET.NO	TOT CLAIMS	IND CLAIMS
15/811,062	11/13/2017	2875	0.00	13682.227107	20	3

CONFIRMATION NO. 1254

FILING RECEIPT

91764
King & Spalding LLP (Eaton/Cooper)
ATTN: IP Docketing Department
1100 Louisiana Street, Suite 4000
Houston, TX 77002-5213

OC000000095716110

Date Mailed: 11/29/2017

Receipt is acknowledged of this non-provisional patent application. The application will be taken up for examination in due course. Applicant will be notified as to the results of the examination. Any correspondence concerning the application must include the following identification information: the U.S. APPLICATION NUMBER, FILING DATE, NAME OF APPLICANT, and TITLE OF INVENTION. Fees transmitted by check or draft are subject to collection. Please verify the accuracy of the data presented on this receipt. **If an error is noted on this Filing Receipt, please submit a written request for a Filing Receipt Correction. Please provide a copy of this Filing Receipt with the changes noted thereon. If you received a "Notice to File Missing Parts" for this application, please submit any corrections to this Filing Receipt with your reply to the Notice. When the USPTO processes the reply to the Notice, the USPTO will generate another Filing Receipt incorporating the requested corrections**

Inventor(s)

Steven Walter Pyshos, Peachtree City, GA;
Raymond Janik, Fayetteville, GA;
Kevin Roy Harpenau, Atlanta, GA;

Applicant(s)

Cooper Technologies Company, Houston, TX;

Power of Attorney: None

Domestic Priority data as claimed by applicant

This application is a CON of 15/435,141 02/16/2017 PAT 9820350
which claims benefit of 62/297,424 02/19/2016

Foreign Applications for which priority is claimed (You may be eligible to benefit from the **Patent Prosecution Highway** program at the USPTO. Please see http://www.uspto.gov for more information.) - None.
Foreign application information must be provided in an Application Data Sheet in order to constitute a claim to foreign priority. See 37 CFR 1.55 and 1.76.

Permission to Access Application via Priority Document Exchange: Yes

Permission to Access Search Results: Yes

Applicant may provide or rescind an authorization for access using Form PTO/SB/39 or Form PTO/SB/69 as appropriate.

If Required, Foreign Filing License Granted: 11/28/2017

The country code and number of your priority application, to be used for filing abroad under the Paris Convention, is **US 15/811,062**

Projected Publication Date: To Be Determined - pending completion of Missing Parts

Non-Publication Request: No

Early Publication Request: No
Title

Configurable Lighting System

Preliminary Class

362

Statement under 37 CFR 1.55 or 1.78 for AIA (First Inventor to File) Transition Applications: No

PROTECTING YOUR INVENTION OUTSIDE THE UNITED STATES

Since the rights granted by a U.S. patent extend only throughout the territory of the United States and have no effect in a foreign country, an inventor who wishes patent protection in another country must apply for a patent in a specific country or in regional patent offices. Applicants may wish to consider the filing of an international application under the Patent Cooperation Treaty (PCT). An international (PCT) application generally has the same effect as a regular national patent application in each PCT-member country. The PCT process **simplifies** the filing of patent applications on the same invention in member countries, but **does not result** in a grant of "an international patent" and does not eliminate the need of applicants to file additional documents and fees in countries where patent protection is desired.

Almost every country has its own patent law, and a person desiring a patent in a particular country must make an application for patent in that country in accordance with its particular laws. Since the laws of many countries differ in various respects from the patent law of the United States, applicants are advised to seek guidance from specific foreign countries to ensure that patent rights are not lost prematurely.

Applicants also are advised that in the case of inventions made in the United States, the Director of the USPTO must issue a license before applicants can apply for a patent in a foreign country. The filing of a U.S. patent application serves as a request for a foreign filing license. The application's filing receipt contains further information and guidance as to the status of applicant's license for foreign filing.

Applicants may wish to consult the USPTO booklet, "General Information Concerning Patents" (specifically, the section entitled "Treaties and Foreign Patents") for more information on timeframes and deadlines for filing foreign patent applications. The guide is available either by contacting the USPTO Contact Center at 800-786-9199, or it can be viewed on the USPTO website at http://www.uspto.gov/web/offices/pac/doc/general/index.html.

For information on preventing theft of your intellectual property (patents, trademarks and copyrights), you may wish to consult the U.S. Government website, http://www.stopfakes.gov. Part of a Department of Commerce initiative, this website includes self-help "toolkits" giving innovators guidance on how to protect intellectual property in specific countries such as China, Korea and Mexico. For questions regarding patent enforcement issues, applicants may call the U.S. Government hotline at 1-866-999-HALT (1-866-999-4258).

Luminex v. Signify
Luminex Exhibit 1021
Page 053

LICENSE FOR FOREIGN FILING UNDER

Title 35, United States Code, Section 184

Title 37, Code of Federal Regulations, 5.11 & 5.15

GRANTED

The applicant has been granted a license under 35 U.S.C. 184, if the phrase "IF REQUIRED, FOREIGN FILING LICENSE GRANTED" followed by a date appears on this form. Such licenses are issued in all applications where the conditions for issuance of a license have been met, regardless of whether or not a license may be required as set forth in 37 CFR 5.15. The scope and limitations of this license are set forth in 37 CFR 5.15(a) unless an earlier license has been issued under 37 CFR 5.15(b). The license is subject to revocation upon written notification. The date indicated is the effective date of the license, unless an earlier license of similar scope has been granted under 37 CFR 5.13 or 5.14.

This license is to be retained by the licensee and may be used at any time on or after the effective date thereof unless it is revoked. This license is automatically transferred to any related applications(s) filed under 37 CFR 1.53(d). This license is not retroactive.

The grant of a license does not in any way lessen the responsibility of a licensee for the security of the subject matter as imposed by any Government contract or the provisions of existing laws relating to espionage and the national security or the export of technical data. Licensees should apprise themselves of current regulations especially with respect to certain countries, of other agencies, particularly the Office of Defense Trade Controls, Department of State (with respect to Arms, Munitions and Implements of War (22 CFR 121-128)); the Bureau of Industry and Security, Department of Commerce (15 CFR parts 730-774); the Office of Foreign AssetsControl, Department of Treasury (31 CFR Parts 500+) and the Department of Energy.

NOT GRANTED

No license under 35 U.S.C. 184 has been granted at this time, if the phrase "IF REQUIRED, FOREIGN FILING LICENSE GRANTED" DOES NOT appear on this form. Applicant may still petition for a license under 37 CFR 5.12, if a license is desired before the expiration of 6 months from the filing date of the application. If 6 months has lapsed from the filing date of this application and the licensee has not received any indication of a secrecy order under 35 U.S.C. 181, the licensee may foreign file the application pursuant to 37 CFR 5.15(b).

SelectUSA

The United States represents the largest, most dynamic marketplace in the world and is an unparalleled location for business investment, innovation, and commercialization of new technologies. The U.S. offers tremendous resources and advantages for those who invest and manufacture goods here. Through SelectUSA, our nation works to promote and facilitate business investment. SelectUSA provides information assistance to the international investor community; serves as an ombudsman for existing and potential investors; advocates on behalf of U.S. cities, states, and regions competing for global investment; and counsels U.S. economic development organizations on investment attraction best practices. To learn more about why the United States is the best country in the world to develop technology, manufacture products, deliver services, and grow your business, visit http://www.SelectUSA.gov or call +1-202-482-6800.

Luminex v. Signify
Luminex Exhibit 1021
Page 054

PTO/SB/08A (08-03)
Approved for use through 07/31/2006. OMB 0651-0031
U.S. Patent and Trademark Office: U.S. DEPARTMENT OF COMMERCE
Under the Paperwork Reduction Act of 1995, no persons are required to respond to a collection of information unless it contains a valid OMB control number.

Substitute for form 1449A/PTO

INFORMATION DISCLOSURE STATEMENT BY APPLICANT

(use as many sheets as necessary)

Sheet	1	of	1

Complete if Known	
Application Number	**15/811,062**
Filing Date	**11-13-2017**
First Named Inventor	**Steven Walter Pyshos**
Group Art Unit	**2875**
Examiner Name	**Not Yet Assigned**
Attorney Docket Number	**13682.227107**

U.S. PATENT DOCUMENTS

Examiner Initials *	Cite No. [1]	U.S. Patent Document Number	Kind Code [2] (if known)	Name of Patentee or Applicant of Cited Document	Date of Publication of Cited Document MM-DD- YYYY	Pages, Columns, Lines, Where Relevant Passages or Relevant Figures Appear
	1	20150054410		Sanders, Chad N.	02-26-2015	
	2	8172415		Wegh, Rene Theodorus	05-08-2012	
	3	7416312		McDermott	08-26-2008	
	4	8317362		Ku et al.	11-27-2012	
	5	20140210357		Yan et al.	07-31-2014	
	6	20060220586		Latham	10-05-2006	
	7	20170086265		Akiyama et al.	03-23-2017	
	8	20170019973		Beck et al.	01-19-2017	
	9	8598793		Yan, Xiantao	12-03-2013	

FOREIGN PATENT DOCUMENTS

Examiner Initials *	Cite No. [1]	Foreign Patent Document Office [3]	Number	Kind Code [2] (if known)	Name of Patentee or Applicant of Cited Document	Date of Publication of Cited Document MM-DD- YYYY	Pages, Columns, Lines, Where Relevant Passages or Relevant Figures Appear	T [6]

OTHER PRIOR ART – NON PATENT LITERATURE DOCUMENTS

Examiner Initials *	Cite No. [1]	Include name of the author (in CAPITAL LETTERS), title of the article (when appropriate), title of the item (book, magazine, journal, serial, symposium, catalog, etc.), date, page(s), volume-issue number(s), publisher, city and/or country where published.	T [6]

Examiner Signature		Date Considered	

*EXAMINER: Initial if reference considered, whether or not citation is in conformance with MPEP 609. Draw line through citation if not in conformance and not considered. Include copy of this form with next communication to applicant.

[1] Unique citation designation number. [2] See attached Kinds of U.S. Patent Documents. [3] Enter Office that issued the document, by the two-letter code (WIPO Standard ST.3). [4] For Japanese patent documents, the indication of the year of the reign of the Emperor must precede the serial number of the patent document. [5] Kind of document by the appropriate symbols as indicated on the document under WIPO Standard ST. 16 if possible. [6] Applicant is to place a check mark here if English language Translation is attached.

Burden Hour Statement: This form is estimated to take 2.0 hours to complete. Time will vary depending upon the needs of the individual case. Any comments on the amount of time you are required to complete this form should be sent to the Chief Information Officer, U. S. Patent and Trademark Office, Washington, DC 20231. DO NOT SEND FEES OR COMPLETED FORMS TO THIS ADDRESS. SEND TO: Assistant Commissioner for Patents, Washington, DC 20231.
DMSLIBRARY01\31584090.v1

Electronic Acknowledgement Receipt

EFS ID:	31393057
Application Number:	15811062
International Application Number:	
Confirmation Number:	1254
Title of Invention:	Configurable Lighting System
First Named Inventor/Applicant Name:	Steven Walter Pyshos
Customer Number:	91764
Filer:	Robert Timothy Neufeld
Filer Authorized By:	
Attorney Docket Number:	13682.227107
Receipt Date:	04-JAN-2018
Filing Date:	13-NOV-2017
Time Stamp:	19:11:24
Application Type:	Utility under 35 USC 111(a)

Payment information:

Submitted with Payment	no

File Listing:

Document Number	Document Description	File Name	File Size(Bytes)/ Message Digest	Multi Part /.zip	Pages (if appl.)
1	Transmittal Letter	227107trans.pdf	81981 551bd2565e04e27473684a94370a65cdee09e73f	no	1

Warnings:

Information:					
2	Information Disclosure Statement (IDS) Form (SB08)	227107ids.pdf	125182 330984efdc0e89c85019b1d9a8cc150170fa8386	no	1
Warnings:					
Information:					
This is not an USPTO supplied IDS fillable form					
			Total Files Size (in bytes):	207163	

This Acknowledgement Receipt evidences receipt on the noted date by the USPTO of the indicated documents, characterized by the applicant, and including page counts, where applicable. It serves as evidence of receipt similar to a Post Card, as described in MPEP 503.

New Applications Under 35 U.S.C. 111
If a new application is being filed and the application includes the necessary components for a filing date (see 37 CFR 1.53(b)-(d) and MPEP 506), a Filing Receipt (37 CFR 1.54) will be issued in due course and the date shown on this Acknowledgement Receipt will establish the filing date of the application.
National Stage of an International Application under 35 U.S.C. 371
If a timely submission to enter the national stage of an international application is compliant with the conditions of 35 U.S.C. 371 and other applicable requirements a Form PCT/DO/EO/903 indicating acceptance of the application as a national stage submission under 35 U.S.C. 371 will be issued in addition to the Filing Receipt, in due course.
New International Application Filed with the USPTO as a Receiving Office
If a new international application is being filed and the international application includes the necessary components for an international filing date (see PCT Article 11 and MPEP 1810), a Notification of the International Application Number and of the International Filing Date (Form PCT/RO/105) will be issued in due course, subject to prescriptions concerning national security, and the date shown on this Acknowledgement Receipt will establish the international filing date of the application.

Patents

IN THE UNITED STATES PATENT AND TRADEMARK OFFICE

In re Application of:	§	
Steven Walter Pyshos	§	Confirmation No**. 1254**
	§	
Application Serial No: **15/811,062**	§	Group Art Unit: **2875**
	§	
Filed: **11-13-2017**	§	Examiner: **Not Yet Assigned**
	§	
For: **Configurable Lighting System**	§	
	§	

INFORMATION DISCLOSURE STATEMENT

Commissioner for Patents
P.O. Box 1450
Alexandria, VA 22313-1450

Sir:

Applicants cite the information on the attached Form PTO/SB/08A, "Information Disclosure Statement by Applicant," pursuant to 37 C.F.R. §§ 1.56, 1.97, and 1.98.

The citation of this information does not constitute an admission that any of the materials are available as a reference or of priority, or a waiver of any right Applicants may have under applicable statutes, Rules of Practice in patent cases, or otherwise.

KING & SPALDING LLP
Intellectual Property Dept. - Patents
1180 Peachtree Street, N.E.
34th Floor
Atlanta, Georgia 30309-3521
Telephone (404) 572-4600
Attorney Docket: 13682.227107

Respectfully submitted,

/Robert T. Neufeld/

Robert T. Neufeld
Reg. No. 48,394

DMSLIBRARY01\31584082.v1

UNITED STATES PATENT AND TRADEMARK OFFICE

UNITED STATES DEPARTMENT OF COMMERCE
United States Patent and Trademark Office
Address: COMMISSIONER FOR PATENTS
P.O. Box 1450
Alexandria, Virginia 22313-1450
www.uspto.gov

APPLICATION NUMBER	FILING OR 371(C) DATE	FIRST NAMED APPLICANT	ATTY. DOCKET NO./TITLE
15/811,062	11/13/2017	Steven Walter Pyshos	13682.227107

CONFIRMATION NO. 1254

FORMALITIES LETTER

91764
King & Spalding LLP (Eaton/Cooper)
ATTN: IP Docketing Department
1100 Louisiana Street, Suite 4000
Houston, TX 77002-5213

OC000000095716111

Date Mailed: 11/29/2017

NOTICE TO FILE MISSING PARTS OF NONPROVISIONAL APPLICATION

FILED UNDER 37 CFR 1.53(b)

Filing Date Granted

Items Required To Avoid Abandonment:

An application number and filing date have been accorded to this application. The item(s) indicated below, however, are missing. Applicant is given **TWO MONTHS** from the date of this Notice within which to file all required items below to avoid abandonment. Extensions of time may be obtained by filing a petition accompanied by the extension fee under the provisions of 37 CFR 1.136(a).

- The statutory basic filing fee is missing.
- The application search fee must be submitted.
- The application examination fee must be submitted.
- Surcharge as set forth in 37 CFR 1.16(f) must be submitted.
  The surcharge is due for any one of:
  - late submission of the basic filing fee, search fee, or examination fee,
  - late submission of inventor's oath or declaration,
  - filing an application that does not contain at least one claim on filing, or
  - submission of an application filed by reference to a previously filed application.

SUMMARY OF FEES DUE:

The fee(s) required within **TWO MONTHS** from the date of this Notice to avoid abandonment is/are itemized below. No entity status discount is in effect. If applicant is qualified for small entity status, a written assertion of small entity status must be submitted to establish small entity status. (See 37 CFR 1.27). If applicant is qualified for micro entity status, an acceptable Certification of Micro Entity Status must be submitted to establish micro entity status. (See 37 CFR 1.29 and forms PTO/SB/15A and 15B.)

- $ **280** basic filing fee.
- $ **140** surcharge.
- $ **600** search fee.
- $ **720** examination fee.
- $(**0**) previous unapplied payment amount.
- $ **1740** TOTAL FEE BALANCE DUE.

Luminex v. Signify
Luminex Exhibit 1021
Page 059

Replies must be received in the USPTO within the set time period or must include a proper Certificate of Mailing or Transmission under 37 CFR 1.8 with a mailing or transmission date within the set time period. For more information and a suggested format, see Form PTO/SB/92 and MPEP 512.

Replies should be mailed to:

Mail Stop Missing Parts
Commissioner for Patents
P.O. Box 1450
Alexandria VA 22313-1450

Registered users of EFS-Web may alternatively submit their reply to this notice via EFS-Web, including a copy of this Notice and selecting the document description "Applicant response to Pre-Exam Formalities Notice". https://sportal.uspto.gov/authenticate/AuthenticateUserLocalEPF.html

For more information about EFS-Web please call the USPTO Electronic Business Center at 1-866-217-9197 or visit our website at http://www.uspto.gov/ebc.

If you are not using EFS-Web to submit your reply, you must include a copy of this notice.

Questions about the contents of this notice and the requirements it sets forth should be directed to the Office of Data Management, Application Assistance Unit, at **(571) 272-4000** or **(571) 272-4200** or **1-888-786-0101**.

/mhaile/

PTO/SB/17 (03-13)
Approved for use through 11/30/2020. OMB 0651-0032
U.S. Patent and Trademark Office; U.S. DEPARTMENT OF COMMERCE
Under the Paperwork Reduction Act of 1995 no persons are required to respond to a collection of information unless it displays a valid OMB control number.

FEE TRANSMITTAL

Complete if known	
Application Number	15/811,062
Filing Date	11-13-2017
First Named Inventor	Steven Walter Pyshos
Examiner Name	Not yet assigned
Art Unit	2875
Practitioner Docket No.	13682.227107

☐ Applicant asserts small entity status. See 37 CFR 1.27.

☐ Applicant certifies micro entity status. See 37 CFR 1.29. Form PTO/SB/15A or B or equivalent must either be enclosed or have been submitted previously.

TOTAL AMOUNT OF PAYMENT ($) 1740

METHOD OF PAYMENT (check all that apply)

☐ Check ☑ Credit Card ☐ Money Order ☐ None ☐ Other (please identify): _____

☑ Deposit Account Deposit Account Number: 110980 Deposit Account Name: King & Spalding

For the above-identified deposit account, the Director is hereby authorized to (check all that apply):

☑ Charge fee(s) indicated below ☐ Charge fee(s) indicated below, **except for the filing fee**

☑ Charge any additional fee(s) or underpayment of fee(s) under 37 CFR 1.16 and 1.17 ☑ Credit any overpayment of fee(s)

WARNING: Information on this form may become public. Credit card information should not be included on this form. Provide credit card information and authorization on PTO-2038.

FEE CALCULATION

1. BASIC FILING, SEARCH, AND EXAMINATION FEES (U = undiscounted fee; S = small entity fee; M = micro entity fee)

	FILING FEES			SEARCH FEES			EXAMINATION FEES			
Application Type	**U ($)**	**S ($)**	**M ($)**	**U ($)**	**S ($)**	**M ($)**	**U ($)**	**S ($)**	**M ($)**	**Fees Paid ($)**
Utility	280	140*	70	600	300	150	720	360	180	1600
Design	180	90	45	120	60	30	460	230	115	
Plant	180	90	45	380	190	95	580	290	145	
Reissue	280	140	70	600	300	150	2,160	1,080	540	
Provisional	260	130	65	0	0	0	0	0	0	

* The $140 small entity status filing fee for a utility application is further reduced to $70 for a small entity status applicant who files the application via EFS-Web.

2. EXCESS CLAIM FEES

Fee Description	**Undiscounted Fee ($)**	**Small Entity Fee ($)**	**Micro Entity Fee ($)**
Each claim over 20 (including Reissues)	80	40	20
Each independent claim over 3 (including Reissues)	420	210	105
Multiple dependent claims	780	390	195

Total Claims _____ -20 or HP = **Extra Claims** _____ x **Fee ($)** _____ = **Fee Paid ($)** _____

HP = highest number of total claims paid for, if greater than 20.

Indep. Claims _____ -3 or HP = **Extra Claims** _____ x **Fee ($)** _____ = **Fee Paid ($)** _____

HP = highest number of independent claims paid for, if greater than 3.

Multiple Dependent Claims

Fee ($) _____ **Fee Paid ($)** _____

3. APPLICATION SIZE FEE

If the specification and drawings exceed 100 sheets of paper (excluding electronically filed sequence or computer listings under 37 CFR 1.52(e)), the application size fee due is $400 ($200 for small entity) ($100 for micro entity) for each additional 50 sheets or fraction thereof. See 35 U.S.C. 41(a)(1)(G) and 37 CFR 1.16(s).

Total Sheets _____ - 100 = **Extra Sheets** _____ / 50 = **Number of each additional 50 or fraction thereof** _____ (round **up** to a whole number) x **Fee ($)** _____ = **Fee Paid ($)** _____

4. OTHER FEE(S) **Fees Paid ($)**

Non-English specification, $130 fee (no small or micro entity discount) _____

Non-electronic filing fee under 37 CFR 1.16(t) for a utility application, $400 fee ($200 small or micro entity) _____

Other (e.g., late filing surcharge): _____ 140

SUBMITTED BY

Signature	/Robert T. Neufeld/	Registration No. (Attorney/Agent) 48394	Telephone 404.572.4600
Name (Print/Type)	Robert T. Neufeld		Date 1-11-2018

This collection of information is required by 37 CFR 1.136. The information is required to obtain or retain a benefit by the public which is to file (and by the USPTO to process) an application. Confidentiality is governed by 35 U.S.C. 122 and 37 CFR 1.14. This collection is estimated to take 30 minutes to complete, including gathering, preparing, and submitting the completed application form to the USPTO. Time will vary depending upon the individual case. Any comments on the amount of time you require to complete this form and/or suggestions for reducing this burden, should be sent to the Chief Information Officer, U.S. Patent and Trademark Office, U.S. Department of Commerce, P.O. Box 1450, Alexandria, VA 22313-1450. DO NOT SEND FEES OR COMPLETED FORMS TO THIS ADDRESS. **SEND TO: Commissioner for Patents, P.O. Box 1450, Alexandria, VA 22313-1450.**

If you need assistance in completing the form, call 1-800-PTO-9199 and select option 2.

Privacy Act Statement

The **Privacy Act of 1974 (P.L. 93-579)** requires that you be given certain information in connection with your submission of the attached form related to a patent application or patent. Accordingly, pursuant to the requirements of the Act, please be advised that: (1) the general authority for the collection of this information is 35 U.S.C. 2(b)(2); (2) furnishing of the information solicited is voluntary; and (3) the principal purpose for which the information is used by the U.S. Patent and Trademark Office is to process and/or examine your submission related to a patent application or patent. If you do not furnish the requested information, the U.S. Patent and Trademark Office may not be able to process and/or examine your submission, which may result in termination of proceedings or abandonment of the application or expiration of the patent.

The information provided by you in this form will be subject to the following routine uses:

1. The information on this form will be treated confidentially to the extent allowed under the Freedom of Information Act (5 U.S.C. 552) and the Privacy Act (5 U.S.C 552a). Records from this system of records may be disclosed to the Department of Justice to determine whether disclosure of these records is required by the Freedom of Information Act.
2. A record from this system of records may be disclosed, as a routine use, in the course of presenting evidence to a court, magistrate, or administrative tribunal, including disclosures to opposing counsel in the course of settlement negotiations.
3. A record in this system of records may be disclosed, as a routine use, to a Member of Congress submitting a request involving an individual, to whom the record pertains, when the individual has requested assistance from the Member with respect to the subject matter of the record.
4. A record in this system of records may be disclosed, as a routine use, to a contractor of the Agency having need for the information in order to perform a contract. Recipients of information shall be required to comply with the requirements of the Privacy Act of 1974, as amended, pursuant to 5 U.S.C. 552a(m).
5. A record related to an International Application filed under the Patent Cooperation Treaty in this system of records may be disclosed, as a routine use, to the International Bureau of the World Intellectual Property Organization, pursuant to the Patent Cooperation Treaty.
6. A record in this system of records may be disclosed, as a routine use, to another federal agency for purposes of National Security review (35 U.S.C. 181) and for review pursuant to the Atomic Energy Act (42 U.S.C. 218(c)).
7. A record from this system of records may be disclosed, as a routine use, to the Administrator, General Services, or his/her designee, during an inspection of records conducted by GSA as part of that agency's responsibility to recommend improvements in records management practices and programs, under authority of 44 U.S.C. 2904 and 2906. Such disclosure shall be made in accordance with the GSA regulations governing inspection of records for this purpose, and any other relevant (*i.e.*, GSA or Commerce) directive. Such disclosure shall not be used to make determinations about individuals.
8. A record from this system of records may be disclosed, as a routine use, to the public after either publication of the application pursuant to 35 U.S.C. 122(b) or issuance of a patent pursuant to 35 U.S.C. 151. Further, a record may be disclosed, subject to the limitations of 37 CFR 1.14, as a routine use, to the public if the record was filed in an application which became abandoned or in which the proceedings were terminated and which application is referenced by either a published application, an application open to public inspection or an issued patent.
9. A record from this system of records may be disclosed, as a routine use, to a Federal, State, or local law enforcement agency, if the USPTO becomes aware of a violation or potential violation of law or regulation.

Electronic Patent Application Fee Transmittal

Application Number:	15811062
Filing Date:	13-Nov-2017
Title of Invention:	Configurable Lighting System
First Named Inventor/Applicant Name:	Steven Walter Pyshos
Filer:	Robert Timothy Neufeld
Attorney Docket Number:	13682.227107

Filed as Large Entity

Filing Fees for Utility under 35 USC 111(a)

Description	Fee Code	Quantity	Amount	Sub-Total in USD($)
Basic Filing:				
UTILITY APPLICATION FILING	1011	1	280	280
UTILITY SEARCH FEE	1111	1	600	600
UTILITY EXAMINATION FEE	1311	1	720	720
Pages:				
Claims:				
Miscellaneous-Filing:				
LATE FILING FEE FOR OATH OR DECLARATION	1051	1	140	140
Petition:				

Description	Fee Code	Quantity	Amount	Sub-Total in USD($)
Patent-Appeals-and-Interference:				
Post-Allowance-and-Post-Issuance:				
Extension-of-Time:				
Miscellaneous:				
			Total in USD ($)	**1740**

Electronic Acknowledgement Receipt	
EFS ID:	31473345
Application Number:	15811062
International Application Number:	
Confirmation Number:	1254
Title of Invention:	Configurable Lighting System
First Named Inventor/Applicant Name:	Steven Walter Pyshos
Customer Number:	91764
Filer:	Robert Timothy Neufeld
Filer Authorized By:	
Attorney Docket Number:	13682.227107
Receipt Date:	11-JAN-2018
Filing Date:	13-NOV-2017
Time Stamp:	18:50:06
Application Type:	Utility under 35 USC 111(a)

Payment information:

Submitted with Payment	yes
Payment Type	CARD
Payment was successfully received in RAM	$1740
RAM confirmation Number	011218INTEFSW18511700
Deposit Account	110980
Authorized User	Sally Sexton
The Director of the USPTO is hereby authorized to charge indicated fees and credit any overpayment as follows: 37 CFR 1.16 (National application filing, search, and examination fees) 37 CFR 1.17 (Patent application and reexamination processing fees)	

37 CFR 1.19 (Document supply fees)

37 CFR 1.20 (Post Issuance fees)

37 CFR 1.21 (Miscellaneous fees and charges)

File Listing:

Document Number	Document Description	File Name	File Size(Bytes)/ Message Digest	Multi Part /.zip	Pages (if appl.)
1	Applicant Response to Pre-Exam Formalities Notice	227107MP.pdf	83634 a10cf26b9d0a2b99f8abff3535c9883b07d99f16	no	2
Warnings:					
Information:					
2	Fee Worksheet (SB06)	sb0017.pdf	258151 b321491b3ca788d6db5156e02f03ce76a6361aee	no	2
Warnings:					
Information:					
3	Fee Worksheet (SB06)	fee-info.pdf	37005 1b482c897c912b1488b78b01b8e67fc330a85edf	no	2
Warnings:					
Information:					
		Total Files Size (in bytes):	378790		

This Acknowledgement Receipt evidences receipt on the noted date by the USPTO of the indicated documents, characterized by the applicant, and including page counts, where applicable. It serves as evidence of receipt similar to a Post Card, as described in MPEP 503.

<u>New Applications Under 35 U.S.C. 111</u>
If a new application is being filed and the application includes the necessary components for a filing date (see 37 CFR 1.53(b)-(d) and MPEP 506), a Filing Receipt (37 CFR 1.54) will be issued in due course and the date shown on this Acknowledgement Receipt will establish the filing date of the application.
<u>National Stage of an International Application under 35 U.S.C. 371</u>
If a timely submission to enter the national stage of an international application is compliant with the conditions of 35 U.S.C. 371 and other applicable requirements a Form PCT/DO/EO/903 indicating acceptance of the application as a national stage submission under 35 U.S.C. 371 will be issued in addition to the Filing Receipt, in due course.
<u>New International Application Filed with the USPTO as a Receiving Office</u>
If a new international application is being filed and the international application includes the necessary components for an international filing date (see PCT Article 11 and MPEP 1810), a Notification of the International Application Number and of the International Filing Date (Form PCT/RO/105) will be issued in due course, subject to prescriptions concerning national security, and the date shown on this Acknowledgement Receipt will establish the international filing date of the application.

PATENT APPLICATION FEE DETERMINATION RECORD Substitute for Form PTO-875	Application or Docket Number 15/811,062

APPLICATION AS FILED - PART I

FOR	(Column 1) NUMBER FILED	(Column 2) NUMBER EXTRA	SMALL ENTITY RATE($)	SMALL ENTITY FEE($)	OR	OTHER THAN SMALL ENTITY RATE($)	OTHER THAN SMALL ENTITY FEE($)
BASIC FEE (37 CFR 1.16(a), (b), or (c))	N/A	N/A	N/A			N/A	280
SEARCH FEE (37 CFR 1.16(k), (i), or (m))	N/A	N/A	N/A			N/A	600
EXAMINATION FEE (37 CFR 1.16(o), (p), or (q))	N/A	N/A	N/A			N/A	720
TOTAL CLAIMS (37 CFR 1.16(i))	20 minus 20 =	*			OR	x 80 =	0.00
INDEPENDENT CLAIMS (37 CFR 1.16(h))	3 minus 3 =	*				x 420 =	0.00
APPLICATION SIZE FEE (37 CFR 1.16(s))	If the specification and drawings exceed 100 sheets of paper, the application size fee due is $310 ($155 for small entity) for each additional 50 sheets or fraction thereof. See 35 U.S.C. 41(a)(1)(G) and 37 CFR 1.16(s).						0.00
MULTIPLE DEPENDENT CLAIM PRESENT (37 CFR 1.16(j))							0.00
* If the difference in column 1 is less than zero, enter "0" in column 2.			TOTAL			TOTAL	1600

APPLICATION AS AMENDED - PART II

		(Column 1) CLAIMS REMAINING AFTER AMENDMENT		(Column 2) HIGHEST NUMBER PREVIOUSLY PAID FOR	(Column 3) PRESENT EXTRA	SMALL ENTITY RATE($)	SMALL ENTITY ADDITIONAL FEE($)	OR	OTHER THAN SMALL ENTITY RATE($)	OTHER THAN SMALL ENTITY ADDITIONAL FEE($)
AMENDMENT A	Total (37 CFR 1.16(i))	*	Minus	**	=	x =		OR	x =	
AMENDMENT A	Independent (37 CFR 1.16(h))	*	Minus	***	=	x =		OR	x =	
AMENDMENT A	Application Size Fee (37 CFR 1.16(s))									
AMENDMENT A	FIRST PRESENTATION OF MULTIPLE DEPENDENT CLAIM (37 CFR 1.16(j))							OR		
						TOTAL ADD'L FEE		OR	TOTAL ADD'L FEE	

		(Column 1) CLAIMS REMAINING AFTER AMENDMENT		(Column 2) HIGHEST NUMBER PREVIOUSLY PAID FOR	(Column 3) PRESENT EXTRA	RATE($)	ADDITIONAL FEE($)	OR	RATE($)	ADDITIONAL FEE($)
AMENDMENT B	Total (37 CFR 1.16(i))	*	Minus	**	=	x =		OR	x =	
AMENDMENT B	Independent (37 CFR 1.16(h))	*	Minus	***	=	x =		OR	x =	
AMENDMENT B	Application Size Fee (37 CFR 1.16(s))									
AMENDMENT B	FIRST PRESENTATION OF MULTIPLE DEPENDENT CLAIM (37 CFR 1.16(j))							OR		
						TOTAL ADD'L FEE		OR	TOTAL ADD'L FEE	

* If the entry in column 1 is less than the entry in column 2, write "0" in column 3.
** If the "Highest Number Previously Paid For" IN THIS SPACE is less than 20, enter "20".
*** If the "Highest Number Previously Paid For" IN THIS SPACE is less than 3, enter "3".
The "Highest Number Previously Paid For" (Total or Independent) is the highest found in the appropriate box in column 1.

UNITED STATES PATENT AND TRADEMARK OFFICE

UNITED STATES DEPARTMENT OF COMMERCE
United States Patent and Trademark Office
Address: COMMISSIONER FOR PATENTS
P.O. Box 1450
Alexandria, Virginia 22313-1450
www.uspto.gov

APPLICATION NUMBER	FILING or 371(c) DATE	GRP ART UNIT	FIL FEE REC'D	ATTY.DOCKET.NO	TOT CLAIMS	IND CLAIMS
15/811,062	11/13/2017	2875	1740	13682.227107	20	3

CONFIRMATION NO. 1254

UPDATED FILING RECEIPT

91764
King & Spalding LLP (Eaton/Cooper)
ATTN: IP Docketing Department
1100 Louisiana Street, Suite 4000
Houston, TX 77002-5213

OC000000096880784

Date Mailed: 01/17/2018

Receipt is acknowledged of this non-provisional patent application. The application will be taken up for examination in due course. Applicant will be notified as to the results of the examination. Any correspondence concerning the application must include the following identification information: the U.S. APPLICATION NUMBER, FILING DATE, NAME OF APPLICANT, and TITLE OF INVENTION. Fees transmitted by check or draft are subject to collection. Please verify the accuracy of the data presented on this receipt. **If an error is noted on this Filing Receipt, please submit a written request for a Filing Receipt Correction. Please provide a copy of this Filing Receipt with the changes noted thereon. If you received a "Notice to File Missing Parts" for this application, please submit any corrections to this Filing Receipt with your reply to the Notice. When the USPTO processes the reply to the Notice, the USPTO will generate another Filing Receipt incorporating the requested corrections**

Inventor(s)

Steven Walter Pyshos, Peachtree City, GA;
Raymond Janik, Fayetteville, GA;
Kevin Roy Harpenau, Atlanta, GA;

Applicant(s)

Cooper Technologies Company, Houston, TX;

Power of Attorney: None

Domestic Priority data as claimed by applicant

This application is a CON of 15/435,141 02/16/2017 PAT 9820350
which claims benefit of 62/297,424 02/19/2016

Foreign Applications for which priority is claimed (You may be eligible to benefit from the **Patent Prosecution Highway** program at the USPTO. Please see http://www.uspto.gov for more information.) - None.
Foreign application information must be provided in an Application Data Sheet in order to constitute a claim to foreign priority. See 37 CFR 1.55 and 1.76.

Permission to Access Application via Priority Document Exchange: Yes

Permission to Access Search Results: Yes

Applicant may provide or rescind an authorization for access using Form PTO/SB/39 or Form PTO/SB/69 as appropriate.

If Required, Foreign Filing License Granted: 11/28/2017

The country code and number of your priority application, to be used for filing abroad under the Paris Convention, is **US 15/811,062**

Projected Publication Date: 04/26/2018

Non-Publication Request: No

Early Publication Request: No
Title

Configurable Lighting System

Preliminary Class

362

Statement under 37 CFR 1.55 or 1.78 for AIA (First Inventor to File) Transition Applications: No

PROTECTING YOUR INVENTION OUTSIDE THE UNITED STATES

Since the rights granted by a U.S. patent extend only throughout the territory of the United States and have no effect in a foreign country, an inventor who wishes patent protection in another country must apply for a patent in a specific country or in regional patent offices. Applicants may wish to consider the filing of an international application under the Patent Cooperation Treaty (PCT). An international (PCT) application generally has the same effect as a regular national patent application in each PCT-member country. The PCT process **simplifies** the filing of patent applications on the same invention in member countries, but **does not result** in a grant of "an international patent" and does not eliminate the need of applicants to file additional documents and fees in countries where patent protection is desired.

Almost every country has its own patent law, and a person desiring a patent in a particular country must make an application for patent in that country in accordance with its particular laws. Since the laws of many countries differ in various respects from the patent law of the United States, applicants are advised to seek guidance from specific foreign countries to ensure that patent rights are not lost prematurely.

Applicants also are advised that in the case of inventions made in the United States, the Director of the USPTO must issue a license before applicants can apply for a patent in a foreign country. The filing of a U.S. patent application serves as a request for a foreign filing license. The application's filing receipt contains further information and guidance as to the status of applicant's license for foreign filing.

Applicants may wish to consult the USPTO booklet, "General Information Concerning Patents" (specifically, the section entitled "Treaties and Foreign Patents") for more information on timeframes and deadlines for filing foreign patent applications. The guide is available either by contacting the USPTO Contact Center at 800-786-9199, or it can be viewed on the USPTO website at http://www.uspto.gov/web/offices/pac/doc/general/index.html.

For information on preventing theft of your intellectual property (patents, trademarks and copyrights), you may wish to consult the U.S. Government website, http://www.stopfakes.gov. Part of a Department of Commerce initiative, this website includes self-help "toolkits" giving innovators guidance on how to protect intellectual property in specific countries such as China, Korea and Mexico. For questions regarding patent enforcement issues, applicants may call the U.S. Government hotline at 1-866-999-HALT (1-866-999-4258).

Luminex v. Signify
Luminex Exhibit 1021
Page 069

LICENSE FOR FOREIGN FILING UNDER

Title 35, United States Code, Section 184

Title 37, Code of Federal Regulations, 5.11 & 5.15

GRANTED

The applicant has been granted a license under 35 U.S.C. 184, if the phrase "IF REQUIRED, FOREIGN FILING LICENSE GRANTED" followed by a date appears on this form. Such licenses are issued in all applications where the conditions for issuance of a license have been met, regardless of whether or not a license may be required as set forth in 37 CFR 5.15. The scope and limitations of this license are set forth in 37 CFR 5.15(a) unless an earlier license has been issued under 37 CFR 5.15(b). The license is subject to revocation upon written notification. The date indicated is the effective date of the license, unless an earlier license of similar scope has been granted under 37 CFR 5.13 or 5.14.

This license is to be retained by the licensee and may be used at any time on or after the effective date thereof unless it is revoked. This license is automatically transferred to any related applications(s) filed under 37 CFR 1.53(d). This license is not retroactive.

The grant of a license does not in any way lessen the responsibility of a licensee for the security of the subject matter as imposed by any Government contract or the provisions of existing laws relating to espionage and the national security or the export of technical data. Licensees should apprise themselves of current regulations especially with respect to certain countries, of other agencies, particularly the Office of Defense Trade Controls, Department of State (with respect to Arms, Munitions and Implements of War (22 CFR 121-128)); the Bureau of Industry and Security, Department of Commerce (15 CFR parts 730-774); the Office of Foreign AssetsControl, Department of Treasury (31 CFR Parts 500+) and the Department of Energy.

NOT GRANTED

No license under 35 U.S.C. 184 has been granted at this time, if the phrase "IF REQUIRED, FOREIGN FILING LICENSE GRANTED" DOES NOT appear on this form. Applicant may still petition for a license under 37 CFR 5.12, if a license is desired before the expiration of 6 months from the filing date of the application. If 6 months has lapsed from the filing date of this application and the licensee has not received any indication of a secrecy order under 35 U.S.C. 181, the licensee may foreign file the application pursuant to 37 CFR 5.15(b).

SelectUSA

The United States represents the largest, most dynamic marketplace in the world and is an unparalleled location for business investment, innovation, and commercialization of new technologies. The U.S. offers tremendous resources and advantages for those who invest and manufacture goods here. Through SelectUSA, our nation works to promote and facilitate business investment. SelectUSA provides information assistance to the international investor community; serves as an ombudsman for existing and potential investors; advocates on behalf of U.S. cities, states, and regions competing for global investment; and counsels U.S. economic development organizations on investment attraction best practices. To learn more about why the United States is the best country in the world to develop technology, manufacture products, deliver services, and grow your business, visit http://www.SelectUSA.gov or call +1-202-482-6800.

PTO/SB/08A (08-03)
Approved for use through 07/31/2006. OMB 0651-0031
U.S. Patent and Trademark Office: U.S. DEPARTMENT OF COMMERCE
Under the Paperwork Reduction Act of 1995, no persons are required to respond to a collection of information unless it contains a valid OMB control number.

Substitute for form 1449A/PTO

INFORMATION DISCLOSURE STATEMENT BY APPLICANT

(use as many sheets as necessary)

Sheet	1	of	1

Complete if Known	
Application Number	**15/811,062**
Filing Date	**11-13-2017**
First Named Inventor	**Steven Walter Pyshos**
Group Art Unit	**2844**
Examiner Name	**Jimmy T. Vu**
Attorney Docket Number	**13682.227107**

U.S. PATENT DOCUMENTS

Examiner Initials *	Cite No. [1]	U.S. Patent Document Number	Kind Code [2] (if known)	Name of Patentee or Applicant of Cited Document	Date of Publication of Cited Document MM-DD- YYYY	Pages, Columns, Lines, Where Relevant Passages or Relevant Figures Appear
	1.	2014/0210376		Hicks, IV; Roy	07-31-2014	

FOREIGN PATENT DOCUMENTS

Examiner Initials *	Cite No. [1]	Foreign Patent Document Office[3]	Number	Kind Code[2] (if known)	Name of Patentee or Applicant of Cited Document	Date of Publication of Cited Document MM-DD- YYYY	Pages, Columns, Lines, Where Relevant Passages or Relevant Figures Appear	T [6]

OTHER PRIOR ART – NON PATENT LITERATURE DOCUMENTS

Examiner Initials *	Cite No. [1]	Include name of the author (in CAPITAL LETTERS), title of the article (when appropriate), title of the item (book, magazine, journal, serial, symposium, catalog, etc.), date, page(s), volume-issue number(s), publisher, city and/or country where published.	T [6]

Examiner Signature		Date Considered	

*EXAMINER: Initial if reference considered, whether or not citation is in conformance with MPEP 609. Draw line through citation if not in conformance and not considered. Include copy of this form with next communication to applicant.

[1] Unique citation designation number. [2] See attached Kinds of U.S. Patent Documents. [3] Enter Office that issued the document, by the two-letter code (WIPO Standard ST.3). [4] For Japanese patent documents, the indication of the year of the reign of the Emperor must precede the serial number of the patent document. [5] Kind of document by the appropriate symbols as indicated on the document under WIPO Standard ST. 16 if possible. [6] Applicant is to place a check mark here if English language Translation is attached.

Burden Hour Statement: This form is estimated to take 2.0 hours to complete. Time will vary depending upon the needs of the individual case. Any comments on the amount of time you are required to complete this form should be sent to the Chief Information Officer, U. S. Patent and Trademark Office, Washington, DC 20231. DO NOT SEND FEES OR COMPLETED FORMS TO THIS ADDRESS. SEND TO: Assistant Commissioner for Patents, Washington, DC 20231.
DMSLIBRARY01\31796380.v1

Electronic Acknowledgement Receipt

EFS ID:	31691435
Application Number:	15811062
International Application Number:	
Confirmation Number:	1254
Title of Invention:	Configurable Lighting System
First Named Inventor/Applicant Name:	Steven Walter Pyshos
Customer Number:	91764
Filer:	Robert Timothy Neufeld
Filer Authorized By:	
Attorney Docket Number:	13682.227107
Receipt Date:	05-FEB-2018
Filing Date:	13-NOV-2017
Time Stamp:	16:24:06
Application Type:	Utility under 35 USC 111(a)

Payment information:

Submitted with Payment	no

File Listing:

Document Number	Document Description	File Name	File Size(Bytes)/ Message Digest	Multi Part /.zip	Pages (if appl.)
1	Transmittal Letter	227107trans.pdf	82238 11e2d3636f2c84f135787efa27ae0fbf4c7778f0	no	1

Warnings:

Information:					
2	Information Disclosure Statement (IDS) Form (SB08)	227107ids.pdf	124627 697e06bf041dc9a53b36da6dca03f6f2ea4a3908	no	1
Warnings:					
Information:					
This is not an USPTO supplied IDS fillable form					
			Total Files Size (in bytes):	206865	

This Acknowledgement Receipt evidences receipt on the noted date by the USPTO of the indicated documents, characterized by the applicant, and including page counts, where applicable. It serves as evidence of receipt similar to a Post Card, as described in MPEP 503.

New Applications Under 35 U.S.C. 111
If a new application is being filed and the application includes the necessary components for a filing date (see 37 CFR 1.53(b)-(d) and MPEP 506), a Filing Receipt (37 CFR 1.54) will be issued in due course and the date shown on this Acknowledgement Receipt will establish the filing date of the application.
National Stage of an International Application under 35 U.S.C. 371
If a timely submission to enter the national stage of an international application is compliant with the conditions of 35 U.S.C. 371 and other applicable requirements a Form PCT/DO/EO/903 indicating acceptance of the application as a national stage submission under 35 U.S.C. 371 will be issued in addition to the Filing Receipt, in due course.
New International Application Filed with the USPTO as a Receiving Office
If a new international application is being filed and the international application includes the necessary components for an international filing date (see PCT Article 11 and MPEP 1810), a Notification of the International Application Number and of the International Filing Date (Form PCT/RO/105) will be issued in due course, subject to prescriptions concerning national security, and the date shown on this Acknowledgement Receipt will establish the international filing date of the application.

IN THE UNITED STATES PATENT AND TRADEMARK OFFICE

In re Application of:	§	
Steven Walter Pyshos	§	Confirmation No.: **1254**
	§	
Application Serial No: **15/811,062**	§	Group Art Unit: **2844**
	§	
Filed: **11-13-2017**	§	Examiner: **Jimmy T. Vu**
	§	
For: **Configurable Lighting System**	§	
	§	

INFORMATION DISCLOSURE STATEMENT

Commissioner for Patents
P.O. Box 1450
Alexandria, VA 22313-1450

Sir:

Applicants cite the information on the attached Form PTO/SB/08A, "Information Disclosure Statement by Applicant," pursuant to 37 C.F.R. §§ 1.56, 1.97, and 1.98.

The citation of this information does not constitute an admission that any of the materials are available as a reference or of priority, or a waiver of any right Applicants may have under applicable statutes, Rules of Practice in patent cases, or otherwise.

No fee is believed to be due; however, the Commissioner is authorized to charge any fee as well as any other deficiency or credit any overpayment to Deposit Account 11-0980.

KING & SPALDING LLP
Intellectual Property Dept. - Patents
1180 Peachtree Street, N.E.
34th Floor
Atlanta, Georgia 30309-3521
Telephone (404) 572-4600
Attorney Docket: 13682.227107

Respectfully submitted,

/Robert T. Neufeld/

Robert T. Neufeld
Reg. No. 48,394

UNITED STATES PATENT AND TRADEMARK OFFICE

UNITED STATES DEPARTMENT OF COMMERCE
United States Patent and Trademark Office
Address: COMMISSIONER FOR PATENTS
P.O. Box 1450
Alexandria, Virginia 22313-1450
www.uspto.gov

APPLICATION NO.	FILING DATE	FIRST NAMED INVENTOR	ATTORNEY DOCKET NO.	CONFIRMATION NO.
15/811,062	11/13/2017	Steven Walter Pyshos	13682.227107	1254

91764 7590 04/09/2018
King & Spalding LLP (Eaton/Cooper)
ATTN: IP Docketing Department
1100 Louisiana Street, Suite 4000
Houston, TX 77002-5213

EXAMINER
VU, JIMMY T

ART UNIT	PAPER NUMBER
2844	

NOTIFICATION DATE	DELIVERY MODE
04/09/2018	ELECTRONIC

Please find below and/or attached an Office communication concerning this application or proceeding.

The time period for reply, if any, is set in the attached communication.

Notice of the Office communication was sent electronically on above-indicated "Notification Date" to the following e-mail address(es):

houpatentdocket@kslaw.com
nduby@kslaw.com

PTOL-90A (Rev. 04/07)

Office Action Summary	Application No. 15/811,062	Applicant(s) PYSHOS ET AL.	
	Examiner JIMMY VU	Art Unit 2844	AIA (First Inventor to File) Status Yes

-- The MAILING DATE of this communication appears on the cover sheet with the correspondence address --

Period for Reply

A SHORTENED STATUTORY PERIOD FOR REPLY IS SET TO EXPIRE 3 MONTHS FROM THE MAILING DATE OF THIS COMMUNICATION.

- Extensions of time may be available under the provisions of 37 CFR 1.136(a). In no event, however, may a reply be timely filed after SIX (6) MONTHS from the mailing date of this communication.
- If NO period for reply is specified above, the maximum statutory period will apply and will expire SIX (6) MONTHS from the mailing date of this communication.
- Failure to reply within the set or extended period for reply will, by statute, cause the application to become ABANDONED (35 U.S.C. § 133). Any reply received by the Office later than three months after the mailing date of this communication, even if timely filed, may reduce any earned patent term adjustment. See 37 CFR 1.704(b).

Status

1)☒ Responsive to communication(s) filed on *11/13/2017*.

☐ A declaration(s)/affidavit(s) under **37 CFR 1.130(b)** was/were filed on _____.

2a)☐ This action is **FINAL**. 2b)☒ This action is non-final.

3)☐ An election was made by the applicant in response to a restriction requirement set forth during the interview on _____; the restriction requirement and election have been incorporated into this action.

4)☐ Since this application is in condition for allowance except for formal matters, prosecution as to the merits is closed in accordance with the practice under *Ex parte Quayle*, 1935 C.D. 11, 453 O.G. 213.

Disposition of Claims*

5)☒ Claim(s) *1-20* is/are pending in the application.

5a) Of the above claim(s) _____ is/are withdrawn from consideration.

6)☒ Claim(s) *1-15* is/are allowed.

7)☒ Claim(s) *16-20* is/are rejected.

8)☐ Claim(s) _____ is/are objected to.

9)☐ Claim(s) _____ are subject to restriction and/or election requirement.

* If any claims have been determined allowable, you may be eligible to benefit from the **Patent Prosecution Highway** program at a participating intellectual property office for the corresponding application. For more information, please see http://www.uspto.gov/patents/init_events/pph/index.jsp or send an inquiry to PPHfeedback@uspto.gov.

Application Papers

10)☐ The specification is objected to by the Examiner.

11)☐ The drawing(s) filed on _____ is/are: a)☐ accepted or b)☐ objected to by the Examiner.

Applicant may not request that any objection to the drawing(s) be held in abeyance. See 37 CFR 1.85(a).

Replacement drawing sheet(s) including the correction is required if the drawing(s) is objected to. See 37 CFR 1.121(d).

Priority under 35 U.S.C. § 119

12)☐ Acknowledgment is made of a claim for foreign priority under 35 U.S.C. § 119(a)-(d) or (f).

Certified copies:

a)☐ All b)☐ Some** c)☐ None of the:

1.☐ Certified copies of the priority documents have been received.

2.☐ Certified copies of the priority documents have been received in Application No. _____.

3.☐ Copies of the certified copies of the priority documents have been received in this National Stage application from the International Bureau (PCT Rule 17.2(a)).

** See the attached detailed Office action for a list of the certified copies not received.

Attachment(s)

1) ☒ Notice of References Cited (PTO-892)

2) ☒ Information Disclosure Statement(s) (PTO/SB/08a and/or PTO/SB/08b) Paper No(s)/Mail Date *1/4/18,2/5/18*.

3) ☐ Interview Summary (PTO-413) Paper No(s)/Mail Date. _____ .

4) ☐ Other: _____.

Luminex v. Signify
Luminex Exhibit 1021
Page 076

DETAILED ACTION

This Office Action is in response to the Applicant's communication filed on 11/13/2017. In virtue of the communication:

Claims 1-20 are pending in the instant application.

The references cited in the Information Disclosure Statement (IDS) filed on 01/04/2018 and 02/05/2018 have been considered by the examiner.

The present application, filed on or after March 16, 2013, is being examined under the first inventor to file provisions of the AIA.

Double Patenting

The nonstatutory double patenting rejection is based on a judicially created doctrine grounded in public policy (a policy reflected in the statute) so as to prevent the unjustified or improper timewise extension of the "right to exclude" granted by a patent and to prevent possible harassment by multiple assignees. A nonstatutory double patenting rejection is appropriate where the conflicting claims are not identical, but at least one examined application claim is not patentably distinct from the reference claim(s) because the examined application claim is either anticipated by, or would have been obvious over, the reference claim(s). See, e.g., *In re Berg*, 140 F.3d 1428, 46 USPQ2d 1226 (Fed. Cir. 1998); *In re Goodman*, 11 F.3d 1046, 29 USPQ2d 2010 (Fed. Cir. 1993); *In re Longi*, 759 F.2d 887, 225 USPQ 645 (Fed. Cir. 1985); *In re Van Ornum*, 686 F.2d 937, 214 USPQ 761 (CCPA 1982); *In re Vogel*, 422 F.2d 438, 164 USPQ 619 (CCPA 1970); *In re Thorington*, 418 F.2d 528, 163 USPQ 644 (CCPA 1969).

A timely filed terminal disclaimer in compliance with 37 CFR 1.321(c) or 1.321(d) may be used to overcome an actual or provisional rejection based on nonstatutory double patenting

provided the reference application or patent either is shown to be commonly owned with the examined application, or claims an invention made as a result of activities undertaken within the scope of a joint research agreement. See MPEP § 717.02 for applications subject to examination under the first inventor to file provisions of the AIA as explained in MPEP § 2159. See MPEP §§ 706.02(l)(1) - 706.02(l)(3) for applications not subject to examination under the first inventor to file provisions of the AIA. A terminal disclaimer must be signed in compliance with 37 CFR 1.321(b).

The USPTO Internet website contains terminal disclaimer forms which may be used. Please visit www.uspto.gov/patent/patents-forms. The filing date of the application in which the form is filed determines what form (e.g., PTO/SB/25, PTO/SB/26, PTO/AIA/25, or PTO/AIA/26) should be used. A web-based eTerminal Disclaimer may be filled out completely online using web-screens. An eTerminal Disclaimer that meets all requirements is auto-processed and approved immediately upon submission. For more information about eTerminal Disclaimers, refer to www.uspto.gov/patents/process/file/efs/guidance/eTD-info-I.jsp.

Claims **16-20** are rejected on the ground of nonstatutory double patenting as being unpatentable over claims 16-20 of U.S. Patent No. 9,820,350 B2. Although the claims at issue are not identical, they are not patentably distinct from each other because claims 16-20 of U.S. Patent '350 discloses the limitations such as a housing, first and second light source, one or more switches, and first, second and third operating configurations, etc., and other combinations thereof as recited in claims 16-20 of the instant application.

Allowable Subject Matter

Claims **1-15** are allowed.

The primary reasons for the allowance of the claims are in the inclusion of the limitation(s):

"*... a controller connected to the at least one input, the first light source, and the second light source, the controller configured to: power the first light source when the at least one input is in the first state; and power the first light source and the second light source when the at least one input is in the second state*" and combination thereof, in the claim(s), i.e., claim 1, (claims 2-10 are allowed as being dependent on claim 1),

"*... a controller coupled to the at least one input, the first light source, the second light source, and the third light source, the controller configured to: power the first light source and the second light source when the at least one input is in a first state; and power the first light source and a third light source when the at least one input is in a second state*" and combination thereof, in the claim(s), i.e., claim 11 (claims 12-15 are allowed as being dependent on claim 11), which are not found in the prior art references.

Inquiry

Any inquiry concerning this communication or earlier communications from the examiner should be directed to Jimmy T Vu whose telephone number is (571) 272-1832. The examiner can normally be reached on M - F: 9 - 6:00.

If attempts to reach the examiner by telephone are unsuccessful, the examiner's supervisor, Douglas Owens can be reached on (571) 272-1662. The fax phone numbers for the organization where this application or proceeding is assigned are (571) 273-8300.

Any inquiry of a general nature or relating to the status of this application or proceeding should be directed to the receptionist whose telephone number is (571) 272-2800.

/JIMMY VU/
Primary Examiner, Art Unit 2844

Notice of References Cited	Application/Control No. 15/811,062	Applicant(s)/Patent Under Reexamination PYSHOS ET AL.	
	Examiner JIMMY VU	Art Unit 2844	Page 1 of 1

U.S. PATENT DOCUMENTS

*		Document Number Country Code-Number-Kind Code	Date MM-YYYY	Name	CPC Classification	US Classification
*	A	US-9,820,350 B2	11-2017	Pyshos; Steven Walter	H05B33/0863	1/1
	B	US-				
	C	US-				
	D	US-				
	E	US-				
	F	US-				
	G	US-				
	H	US-				
	I	US-				
	J	US-				
	K	US-				
	L	US-				
	M	US-				

FOREIGN PATENT DOCUMENTS

*		Document Number Country Code-Number-Kind Code	Date MM-YYYY	Country	Name	CPC Classification
	N					
	O					
	P					
	Q					
	R					
	S					
	T					

NON-PATENT DOCUMENTS

*		Include as applicable: Author, Title Date, Publisher, Edition or Volume, Pertinent Pages)
	U	
	V	
	W	
	X	

*A copy of this reference is not being furnished with this Office action. (See MPEP § 707.05(a).)
Dates in MM-YYYY format are publication dates. Classifications may be US or foreign.

Luminex v. Signify
Luminex Exhibit 1021
Page 081

PTO/SB/08A (08-03)
Approved for use through 07/31/2006. OMB 0651-0031
U.S. Patent and Trademark Office: U.S. DEPARTMENT OF COMMERCE
Under the Paperwork Reduction Act of 1995, no persons are required to respond to a collection of information unless it contains a valid OMB control number.

Substitute for form 1449A/PTO

INFORMATION DISCLOSURE STATEMENT BY APPLICANT

(use as many sheets as necessary)

Sheet	1	of	1

Complete if Known	
Application Number	**15/811,062**
Filing Date	**11-13-2017**
First Named Inventor	**Steven Walter Pyshos**
Group Art Unit	**2875**
Examiner Name	**Not Yet Assigned**
Attorney Docket Number	**13682.227107**

U.S. PATENT DOCUMENTS

Examiner Initials *	Cite No. [1]	U.S. Patent Document Number	Kind Code [2] (if known)	Name of Patentee or Applicant of Cited Document	Date of Publication of Cited Document MM-DD- YYYY	Pages, Columns, Lines, Where Relevant Passages or Relevant Figures Appear
	1	20150054410		Sanders, Chad N.	02-26-2015	
	2	8172415		Wegh, Rene Theodorus	05-08-2012	
	3	7416312		McDermott	08-26-2008	
	4	8317362		Ku et al.	11-27-2012	
	5	20140210357		Yan et al.	07-31-2014	
	6	20060220586		Latham	10-05-2006	
	7	20170086265		Akiyama et al.	03-23-2017	
	8	20170019973		Beck et al.	01-19-2017	
	9	8598793		Yan, Xiantao	12-03-2013	

FOREIGN PATENT DOCUMENTS

Examiner Initials *	Cite No. [1]	Foreign Patent Document Office [3]	Number	Kind Code [2] (if known)	Name of Patentee or Applicant of Cited Document	Date of Publication of Cited Document MM-DD- YYYY	Pages, Columns, Lines, Where Relevant Passages or Relevant Figures Appear	T [6]

OTHER PRIOR ART – NON PATENT LITERATURE DOCUMENTS

Examiner Initials *	Cite No. [1]	Include name of the author (in CAPITAL LETTERS), title of the article (when appropriate), title of the item (book, magazine, journal, serial, symposium, catalog, etc.), date, page(s), volume-issue number(s), publisher, city and/or country where published.	T [6]

Examiner Signature	/JIMMY T VU/	Date Considered	03/31/2018

*EXAMINER: Initial if reference considered, whether or not citation is in conformance with MPEP 609. Draw line through citation if not in conformance and not considered. Include copy of this form with next communication to applicant.

[1] Unique citation designation number. [2] See attached Kinds of U.S. Patent Documents. [3] Enter Office that issued the document, by the two-letter code (WIPO Standard ST.3). [4] For Japanese patent documents, the indication of the year of the reign of the Emperor must precede the serial number of the patent document. [5] Kind of document by the appropriate symbols as indicated on the document under WIPO Standard ST. 16 if possible. [6] Applicant is to place a check mark here if English language Translation is attached.

Burden Hour Statement: This form is estimated to take 2.0 hours to complete. Time will vary depending upon the needs of the individual case. Any comments on the amount of time you are required to complete this form should be sent to the Chief Information Officer, U. S. Patent and Trademark Office, Washington, DC 20231. DO NOT SEND FEES OR COMPLETED FORMS TO THIS ADDRESS. SEND TO: Assistant Commissioner for Patents, Washington, DC 20231.
DMSLIBRARY01\31584090.v1

ALL REFERENCES CONSIDERED EXCEPT WHERE LINED THROUGH. /J.T.V/

UNITED STATES PATENT AND TRADEMARK OFFICE

UNITED STATES DEPARTMENT OF COMMERCE
United States Patent and Trademark Office
Address: COMMISSIONER FOR PATENTS
P.O. Box 1450
Alexandria, Virginia 22313-1450
www.uspto.gov

BIB DATA SHEET

CONFIRMATION NO. 1254

SERIAL NUMBER	FILING or 371(c) DATE	CLASS	GROUP ART UNIT	ATTORNEY DOCKET NO.
15/811,062	11/13/2017 RULE	315	2844	13682.227107

APPLICANTS
Cooper Technologies Company, Houston, TX;

INVENTORS
Steven Walter Pyshos, Peachtree City, GA;
Raymond Janik, Fayetteville, GA;
Kevin Roy Harpenau, Atlanta, GA;

**** CONTINUING DATA ****************************
This application is a CON of 15/435,141 02/16/2017 PAT 9820350
which claims benefit of 62/297,424 02/19/2016

**** FOREIGN APPLICATIONS ****************************

**** IF REQUIRED, FOREIGN FILING LICENSE GRANTED ****
11/28/2017

Foreign Priority claimed	☐ Yes ☑ No		STATE OR COUNTRY	SHEETS DRAWINGS	TOTAL CLAIMS	INDEPENDENT CLAIMS
35 USC 119(a-d) conditions met	☐ Yes ☑ No	☐ Met after Allowance				
Verified and Acknowledged	/JIMMY T VU/ Examiner's Signature	/JV/ Initials	GA	10	20	3

ADDRESS
King & Spalding LLP (Eaton/Cooper)
ATTN: IP Docketing Department
1100 Louisiana Street, Suite 4000
Houston, TX 77002-5213
UNITED STATES

TITLE
Configurable Lighting System

FILING FEE RECEIVED		
1740	FEES: Authority has been given in Paper No._____ to charge/credit DEPOSIT ACCOUNT No._____ for following:	☐ All Fees ☐ 1.16 Fees (Filing) ☐ 1.17 Fees (Processing Ext. of time) ☐ 1.18 Fees (Issue) ☐ Other _____ ☐ Credit

EAST Search History

EAST Search History (Prior Art)

Ref #	Hits	Search Query	DBs	Default Operator	Plurals	Time Stamp
S61	4	15/435141	US-PGPUB; USPAT; USOCR; FPRS; EPO; JPO; DERWENT; IBM_TDB	OR	ON	2018/03/31 18:44
S62	9	("20060220586" | "20140210357" | "20150054410" | "20170019973" | "20170086265" | "7416312" | "8172415" | "8317362" | "8598793").PN. OR ("9892693").URPN.	US-PGPUB; USPAT; USOCR	OR	OFF	2018/03/31 18:55
S63	58408	(light$3|lamp$1|LED$1|luminaire) and (input$4 with (set|setting|settable) with (state$1|channel$1))	US-PGPUB; USPAT; USOCR; FPRS; EPO; JPO; DERWENT; IBM_TDB	OR	ON	2018/03/31 18:56
S64	1991	S63 and ((color|colour) with temperature)	US-PGPUB; USPAT; USOCR; FPRS; EPO; JPO; DERWENT; IBM_TDB	OR	ON	2018/03/31 18:58
S65	106	S64 and (control$4 with light$3 with (state$1|channel$1) with first with second)	US-PGPUB; USPAT; USOCR; FPRS; EPO; JPO; DERWENT; IBM_TDB	OR	ON	2018/03/31 19:01
S66	21	S65 and 315/151,185R,209R,291,294,307,308,312.ccls.	US-PGPUB; USPAT; USOCR; FPRS; EPO; JPO; DERWENT; IBM_TDB	OR	ON	2018/03/31 19:02
S67	2747	(light$3|lamp$1|LED$1|luminaire) with color with mix$3 with (state$1|channel$1)	US-PGPUB; USPAT; USOCR; FPRS; EPO; JPO; DERWENT; IBM_TDB	OR	ON	2018/03/31 19:19
S68	589	(light$3|lamp$1|LED$1|luminaire) with color with mix$3 with (state$1|channel$1) with (control$4|switch$3)	US-PGPUB; USPAT; USOCR; FPRS; EPO; JPO; DERWENT; IBM_TDB	OR	ON	2018/03/31 19:20
S69	49	S68 and 315/151,185R,209R,291,294,307,308,312.ccls.	US-PGPUB; USPAT; USOCR; FPRS; EPO; JPO; DERWENT; IBM_TDB	OR	ON	2018/03/31 19:20
S70	13	("20030112229" | "20040155608" | "20040183475" | "20050002188" | "20050280375" | "20060202915" | "20070013321" | "5959413" | "6369525" | "7339323" | "7605809").PN. OR ("8067898").URPN.	US-PGPUB; USPAT; USOCR	OR	OFF	2018/03/31 19:33

S71	4149	(light$3|lamp$1|LED$1|luminaire) and (control$4 with light$3 with state$1 with (switch$3|tun$4) with input$4)	US-PGPUB; USPAT; USOCR; FPRS; EPO; JPO; DERWENT; IBM_TDB	OR	ON	2018/03/31 20:30
S72	229	S71 and ((color|colour) with temperature)	US-PGPUB; USPAT; USOCR; FPRS; EPO; JPO; DERWENT; IBM_TDB	OR	ON	2018/03/31 20:31
S73	31	S72 and 315/151,185R,209R,291,294,307,308,312.ccls.	US-PGPUB; USPAT; USOCR; FPRS; EPO; JPO; DERWENT; IBM_TDB	OR	ON	2018/03/31 20:31
S74	33	S63 and (dual with pin with switch$3)	US-PGPUB; USPAT; USOCR; FPRS; EPO; JPO; DERWENT; IBM_TDB	OR	ON	2018/03/31 20:36
S75	0	S74 and 315/$.ccls.	US-PGPUB; USPAT; USOCR; FPRS; EPO; JPO; DERWENT; IBM_TDB	OR	ON	2018/03/31 20:36
S76	2	S74 and 345/$.ccls.	US-PGPUB; USPAT; USOCR; FPRS; EPO; JPO; DERWENT; IBM_TDB	OR	ON	2018/03/31 20:36
S77	5	S74 and ((color|colour) with temperature)	US-PGPUB; USPAT; USOCR; FPRS; EPO; JPO; DERWENT; IBM_TDB	OR	ON	2018/03/31 20:38
S78	150356	(H05B37/02|H05B33/08|H05B33/0845|H05B33/0863|F21K9/62|F21S8/026|F21V3/02|F21V5/04|F21V7/00|F21V17/12|F21V21/088|F21V23/001|F21Y2113/13|F21Y2115/10).cpc.	US-PGPUB; USPAT; USOCR; FPRS; EPO; JPO; DERWENT; IBM_TDB	OR	ON	2018/04/02 02:05
S79	288	S78 and (light$3|lamp$1|LED$1|luminaire) and (control$4 with light$3 with state$1 with (switch$3|tun$4) with input$4)	US-PGPUB; USPAT; USOCR; FPRS; EPO; JPO; DERWENT; IBM_TDB	OR	ON	2018/04/02 02:06
S80	83	S79 and ((color|colour) with temperature)	US-PGPUB; USPAT; USOCR; FPRS; EPO; JPO; DERWENT; IBM_TDB	OR	ON	2018/04/02 02:07
S81	1	S80 and (hous$3 with switch$3 with pin$1)	US-PGPUB; USPAT; USOCR; FPRS; EPO; JPO; DERWENT; IBM_TDB	OR	ON	2018/04/02 02:08

S82	30	((“PYSHOS”) near3 (“Steven”)).INV.	US-PGPUB; USPAT; USOCR	OR	OFF	2018/04/02 02:08
S83	27	(“JANIK”) near3 (“Raymond”)).INV.	US-PGPUB; USPAT; USOCR	OR	OFF	2018/04/02 02:08
S84	36	((“HARPENAU”) near3 (“Kevin”)).INV.	US-PGPUB; USPAT; USOCR	OR	OFF	2018/04/02 02:08

EAST Search History (Interference)

< This search history is empty>

4/2/2018 2:21:57 AM
C:\Users\jvu\Documents\EAST\Workspaces\5811062.wsp

Search Notes	Application/Control No.	Applicant(s)/Patent Under Reexamination
	15811062	PYSHOS ET AL.
	Examiner	**Art Unit**
	JIMMY VU	2844

CPC- SEARCHED		
Symbol	**Date**	**Examiner**
H05B37/02|H05B33/08|H05B33/0845|H05B33/0863|F21K9/62|F21S8/026|F21V3/02|F21V5/04|F21V7/00|F21V17/12|F21V21/088|F21V23/001|F21Y2113/13|F21Y2115/10	4/2/18	JV

CPC COMBINATION SETS - SEARCHED		
Symbol	**Date**	**Examiner**

US CLASSIFICATION SEARCHED			
Class	**Subclass**	**Date**	**Examiner**
315	151,185R,209R,291,294,307,308,312	3/31/18	JV

* See search history printout included with this form or the SEARCH NOTES box below to determine the scope of the search.

SEARCH NOTES		
Search Notes	**Date**	**Examiner**
Class/subclass, CPC, Text, Assignment data, Inventor name, &Back/Forward search (EAST)	3/31/18	JV
considered IDS	3/31/18	JV
updated search	4/2/18	JV

INTERFERENCE SEARCH			
US Class/ CPC Symbol	**US Subclass / CPC Group**	**Date**	**Examiner**

Luminex v. Signify
Luminex Exhibit 1021
Page 087

Index of Claims	Application/Control No.	Applicant(s)/Patent Under Reexamination
	15811062	PYSHOS ET AL.
	Examiner	**Art Unit**
	JIMMY VU	2844

✓	Rejected	-	Cancelled	N	Non-Elected	A	Appeal
=	Allowed	÷	Restricted	I	Interference	O	Objected

☐ Claims renumbered in the same order as presented by applicant ☐ CPA ☐ T.D. ☐ R.1.47

CLAIM		DATE								
Final	Original	04/02/2018								
	1	=								
	2	=								
	3	=								
	4	=								
	5	=								
	6	=								
	7	=								
	8	=								
	9	=								
	10	=								
	11	=								
	12	=								
	13	=								
	14	=								
	15	=								
	16	✓								
	17	✓								
	18	✓								
	19	✓								
	20	✓								

PTO/SB/08A (08-03)
Approved for use through 07/31/2006. OMB 0651-0031
U.S. Patent and Trademark Office: U.S. DEPARTMENT OF COMMERCE
Under the Paperwork Reduction Act of 1995, no persons are required to respond to a collection of information unless it contains a valid OMB control number.

Substitute for form 1449A/PTO

INFORMATION DISCLOSURE STATEMENT BY APPLICANT

(use as many sheets as necessary)

Sheet	1	of	1

Complete if Known	
Application Number	**15/811,062**
Filing Date	**11-13-2017**
First Named Inventor	**Steven Walter Pyshos**
Group Art Unit	**2844**
Examiner Name	**Jimmy T. Vu**
Attorney Docket Number	**13682.227107**

U.S. PATENT DOCUMENTS

Examiner Initials *	Cite No. [1]	U.S. Patent Document Number	Kind Code [2] (if known)	Name of Patentee or Applicant of Cited Document	Date of Publication of Cited Document MM-DD- YYYY	Pages, Columns, Lines, Where Relevant Passages or Relevant Figures Appear
	1.	2014/0210376		Hicks, IV; Roy	07-31-2014	

FOREIGN PATENT DOCUMENTS

Examiner Initials *	Cite No. [1]	Foreign Patent Document Office[3]	Number	Kind Code[2] (if known)	Name of Patentee or Applicant of Cited Document	Date of Publication of Cited Document MM-DD- YYYY	Pages, Columns, Lines, Where Relevant Passages or Relevant Figures Appear	T [6]

OTHER PRIOR ART – NON PATENT LITERATURE DOCUMENTS

Examiner Initials *	Cite No. [1]	Include name of the author (in CAPITAL LETTERS), title of the article (when appropriate), title of the item (book, magazine, journal, serial, symposium, catalog, etc.), date, page(s), volume-issue number(s), publisher, city and/or country where published.	T [6]

Examiner Signature	/JIMMY T VU/	Date Considered	03/31/2018

*EXAMINER: Initial if reference considered, whether or not citation is in conformance with MPEP 609. Draw line through citation if not in conformance and not considered. Include copy of this form with next communication to applicant.

[1] Unique citation designation number. [2] See attached Kinds of U.S. Patent Documents. [3] Enter Office that issued the document, by the two-letter code (WIPO Standard ST.3). [4] For Japanese patent documents, the indication of the year of the reign of the Emperor must precede the serial number of the patent document. [5] Kind of document by the appropriate symbols as indicated on the document under WIPO Standard ST. 16 if possible. [6] Applicant is to place a check mark here if English language Translation is attached.

Burden Hour Statement: This form is estimated to take 2.0 hours to complete. Time will vary depending upon the needs of the individual case. Any comments on the amount of time you are required to complete this form should be sent to the Chief Information Officer, U. S. Patent and Trademark Office, Washington, DC 20231. DO NOT SEND FEES OR COMPLETED FORMS TO THIS ADDRESS. SEND TO: Assistant Commissioner for Patents, Washington, DC 20231.
DMSLIBRARY01\31796380.v1

ALL REFERENCES CONSIDERED EXCEPT WHERE LINED THROUGH. /J.T.V/

PTO/SB/08A (08-03)
Approved for use through 07/31/2006. OMB 0651-0031
U.S. Patent and Trademark Office: U.S. DEPARTMENT OF COMMERCE
Under the Paperwork Reduction Act of 1995, no persons are required to respond to a collection of information unless it contains a valid OMB control number.

Substitute for form 1449A/PTO

INFORMATION DISCLOSURE STATEMENT BY APPLICANT

(use as many sheets as necessary)

Sheet	1	of	1

Complete if Known	
Application Number	**15/811,062**
Filing Date	**11-13-2017**
First Named Inventor	**Steven Walter Pyshos**
Group Art Unit	**2844**
Examiner Name	**Jimmy T. Vu**
Attorney Docket Number	**13682.227107**

U.S. PATENT DOCUMENTS

Examiner Initials *	Cite No. [1]	U.S. Patent Document Number	Kind Code [2] (if known)	Name of Patentee or Applicant of Cited Document	Date of Publication of Cited Document MM-DD- YYYY	Pages, Columns, Lines, Where Relevant Passages or Relevant Figures Appear
	1	8941312		McRae	01-27-2015	
	2	9892693		Kumar	02-13-2018	

FOREIGN PATENT DOCUMENTS

Examiner Initials *	Cite No. [1]	Foreign Patent Document Office[3]	Number	Kind Code[2] (if known)	Name of Patentee or Applicant of Cited Document	Date of Publication of Cited Document MM-DD- YYYY	Pages, Columns, Lines, Where Relevant Passages or Relevant Figures Appear	T [6]

OTHER PRIOR ART – NON PATENT LITERATURE DOCUMENTS

Examiner Initials *	Cite No. [1]	Include name of the author (in CAPITAL LETTERS), title of the article (when appropriate), title of the item (book, magazine, journal, serial, symposium, catalog, etc.), date, page(s), volume-issue number(s), publisher, city and/or country where published.	T [6]
	3	Test Report of California Appliance Efficiency Compliance for Permanently Installed High Efficacy LEDs under Title 24, issued November 18, 2015	
	4	Energy Star, Certificate of Compliance; Certificate No. 1129756, issued 11/25/2015	
	5	Test Report of IES LM-79-08; Approved Method: Electrical and Photometric Measurements of Solid-State Lighting Products; issued November 18, 2015	

Examiner Signature		Date Considered	

*EXAMINER: Initial if reference considered, whether or not citation is in conformance with MPEP 609. Draw line through citation if not in conformance and not considered. Include copy of this form with next communication to applicant.

[1] Unique citation designation number. [2] See attached Kinds of U.S. Patent Documents. [3] Enter Office that issued the document, by the two-letter code (WIPO Standard ST.3). [4] For Japanese patent documents, the indication of the year of the reign of the Emperor must precede the serial number of the patent document. [5] Kind of document by the appropriate symbols as indicated on the document under WIPO Standard ST. 16 if possible. [6] Applicant is to place a check mark here if English language Translation is attached.

Burden Hour Statement: This form is estimated to take 2.0 hours to complete. Time will vary depending upon the needs of the individual case. Any comments on the amount of time you are required to complete this form should be sent to the Chief Information Officer, U. S. Patent and Trademark Office, Washington, DC 20231. DO NOT SEND FEES OR COMPLETED FORMS TO THIS ADDRESS. SEND TO: Assistant Commissioner for Patents, Washington, DC 20231.
DMSLIBRARY01\32087377.v1

Electronic Patent Application Fee Transmittal	
Application Number:	15811062
Filing Date:	13-Nov-2017
Title of Invention:	Configurable Lighting System
First Named Inventor/Applicant Name:	Steven Walter Pyshos
Filer:	Robert Timothy Neufeld
Attorney Docket Number:	13682.227107

Filed as Large Entity

Filing Fees for Utility under 35 USC 111(a)

Description	Fee Code	Quantity	Amount	Sub-Total in USD($)
Basic Filing:				
Pages:				
Claims:				
Miscellaneous-Filing:				
Petition:				
Patent-Appeals-and-Interference:				
Post-Allowance-and-Post-Issuance:				
Extension-of-Time:				

Description	Fee Code	Quantity	Amount	Sub-Total in USD($)
Miscellaneous:				
SUBMISSION- INFORMATION DISCLOSURE STMT	1806	1	240	240
		Total in USD ($)		**240**

Electronic Acknowledgement Receipt	
EFS ID:	32361281
Application Number:	15811062
International Application Number:	
Confirmation Number:	1254
Title of Invention:	Configurable Lighting System
First Named Inventor/Applicant Name:	Steven Walter Pyshos
Customer Number:	91764
Filer:	Robert Timothy Neufeld
Filer Authorized By:	
Attorney Docket Number:	13682.227107
Receipt Date:	18-APR-2018
Filing Date:	13-NOV-2017
Time Stamp:	12:30:30
Application Type:	Utility under 35 USC 111(a)

Payment information:

Submitted with Payment	yes
Payment Type	CARD
Payment was successfully received in RAM	$240
RAM confirmation Number	041818INTEFSW12313301
Deposit Account	110980
Authorized User	Sally Sexton
The Director of the USPTO is hereby authorized to charge indicated fees and credit any overpayment as follows: 37 CFR 1.16 (National application filing, search, and examination fees) 37 CFR 1.17 (Patent application and reexamination processing fees)	

37 CFR 1.19 (Document supply fees)

37 CFR 1.20 (Post Issuance fees)

37 CFR 1.21 (Miscellaneous fees and charges)

File Listing:

Document Number	Document Description	File Name	File Size(Bytes)/ Message Digest	Multi Part /.zip	Pages (if appl.)
1	Transmittal Letter	227107trans.pdf	88676 651135d5c615c6606b275caada034cbae0af003c	no	3
Warnings:					
Information:					
2	Information Disclosure Statement (IDS) Form (SB08)	227107ids.pdf	124970 4a57c36888ff0d5b46b0eae99000fb0c45853ff9	no	1
Warnings:					
Information:					
This is not an USPTO supplied IDS fillable form					
3	Non Patent Literature	certif.pdf	77258 d91171ae7ca34aba4383392ae60eab9e147ce376	no	1
Warnings:					
Information:					
4	Non Patent Literature	photometric.pdf	585560 358daead5b337ac285f96c1fdc452bc663cdecf2	no	13
Warnings:					
Information:					
5	Non Patent Literature	test_led.pdf	365184 d2f556fe356c3f1385cddd49dc293cd30c39baab	no	6
Warnings:					
Information:					
6	Fee Worksheet (SB06)	fee-info.pdf	30448 66767175e80647115924cb277a5e80110bfa7a68	no	2
Warnings:					

Information:	
Total Files Size (in bytes):	1272096

This Acknowledgement Receipt evidences receipt on the noted date by the USPTO of the indicated documents, characterized by the applicant, and including page counts, where applicable. It serves as evidence of receipt similar to a Post Card, as described in MPEP 503.

New Applications Under 35 U.S.C. 111
If a new application is being filed and the application includes the necessary components for a filing date (see 37 CFR 1.53(b)-(d) and MPEP 506), a Filing Receipt (37 CFR 1.54) will be issued in due course and the date shown on this Acknowledgement Receipt will establish the filing date of the application.
National Stage of an International Application under 35 U.S.C. 371
If a timely submission to enter the national stage of an international application is compliant with the conditions of 35 U.S.C. 371 and other applicable requirements a Form PCT/DO/EO/903 indicating acceptance of the application as a national stage submission under 35 U.S.C. 371 will be issued in addition to the Filing Receipt, in due course.
New International Application Filed with the USPTO as a Receiving Office
If a new international application is being filed and the international application includes the necessary components for an international filing date (see PCT Article 11 and MPEP 1810), a Notification of the International Application Number and of the International Filing Date (Form PCT/RO/105) will be issued in due course, subject to prescriptions concerning national security, and the date shown on this Acknowledgement Receipt will establish the international filing date of the application.

IN THE UNITED STATES PATENT AND TRADEMARK OFFICE

In re Application of:	§	
Steven Walter Pyshos	§	Confirmation No.: **1254**
	§	
Application Serial No: **15/811,062**	§	Group Art Unit: **2844**
	§	
Filed: **11-13-2017**	§	Examiner: **Jimmy T. Vu**
	§	
For: **Configurable Lighting System**	§	Attorney Docket: **13682.227107**
	§	

INFORMATION DISCLOSURE STATEMENT

Commissioner for Patents
P.O. Box 1450
Alexandria, VA 22313-1450

Sir:

This Information Disclosure Statement is filed in accordance with 37 C.F.R. §§1.56, 1.97 and 1.98. The items listed on Form SB/08B are made of record to assist the Patent and Trademark Office in its examination of this application. The Examiner is respectfully requested to fully consider the items and to independently ascertain their teaching.

1. ☐ For each of the following items listed on the enclosed copy of Form SB/08B that is not in the English language, an English language translation of that item or a portion thereof or a concise explanation of the relevance of that item is enclosed:

2. ☐ For each of the following items listed on the enclosed copy of Form SB/08B that is not in the English language, a concise explanation of the relevance of that item is provided:

3. ☐ Any copy of the items listed on the enclosed copy of Form SB/08B that is not enclosed with this Information Disclosure Statement was previously cited by or submitted to the Patent and Trademark Office in application Serial No.

4. ☐ No fee is due under 37 C.F.R. §1.17(p) for this Information Disclosure Statement since it is being filed in compliance with:

   ☐ 37 C.F.R. §1.97(b)(1), within three months of the filing date of a national application other than a CPA; or

☐ 37 C.F.R. §1.97(b)(2), within three months of the date of entry into the national stage as set forth in §1.491 in an international application; or

☐ 37 C.F.R. §1.97(b)(3), before the mailing date of a first Office action on the merits; or

☐ 37 C.F.R. §1.97(b)(4) before the mailing date of a first office action after the filing of an RCE under §1.114

5. ☐ No fee is due under 37 C.F.R. §1.17(p) for this Supplemental Information Disclosure Statement since it is being filed in compliance with 37 C.F.R. §1.97(c), after the period specified in paragraph 4 above but before the mailing date of a final action or a Notice of Allowance (where there has been no prior final action), and is accompanied by one of the certifications pursuant to 37 C.F.R. §1.97(e) set forth in paragraph 9 below.

6. ☒ A fee is due under 37 C.F.R. §1.17(p) for this Supplemental Information Disclosure Statement since it is being filed in compliance with 37 C.F.R. §1.97(c), after the period specified in paragraph 4 above but before the mailing date of a final action or a notice of allowance (where there has been no prior final action):

☒ Payment of $180.00 is being made with a credit card via EFS-Web.

☐ Charge the fee to Deposit Account No.11-0980, Order No._____.

7. ☐ A fee is due under 37 C.F.R. §1.17(p) for this Supplemental Information Disclosure Statement since it is being filed in compliance with 37 C.F.R. §1.97(d), after the mailing date of a final action or a notice of allowance, whichever comes first, but before payment of the issue fee, and is accompanied by:

a. one of the certifications pursuant to 37 C.F.R. §1.97(e) set forth in paragraph 9 below; and

b. the fee due under 37 C.F.R. §1.17(p) which is paid as set forth in paragraph 11 below.

8. ☐ This Supplemental Information Disclosure Statement is being filed in compliance with:

a. ☐ 37 C.F.R. §1.313(b)(3) or §1.313(c)(1), after the issue fee has been paid and information cited in this Supplemental Information Disclosure Statement may render at least one claim unpatentable and is accompanied by the attached Petition To Withdraw Application From Issue and fee pursuant to 37 C.F.R. §1.17(h);

b. ☐ 37 C.F.R. §1.313(c)(2) or §1.313(c)(3), after the issue fee has been paid and information cited in this Supplemental Information Disclosure Statement is to be considered in a Request for Continued Examination (RCE) or a Continuation application upon abandonment of the instant application and is accompanied by the attached Petition To Withdraw Application From Issue and fee pursuant to 37 C.F.R. §1.17(h).

c. ☐ The fee due under 37 C.F.R. §§1.17(h) is paid as set forth in paragraph 11 below.

9. ☐ I hereby certify that each item of information contained in this Supplemental Information Disclosure Statement was first cited in a communication from a foreign patent office in a counterpart foreign application not more than three months prior to the filing of this Supplemental Information Disclosure Statement.

☐ I hereby certify that no item of information in the Supplemental Information Disclosure Statement filed herewith was cited in a communication from a foreign patent office in a counterpart foreign application or, to my knowledge after making reasonable inquiry, was known to any individual designated in §1.56(c) more than three months prior to the filing of this Supplemental Information Disclosure Statement.

10. ☐ This document is accompanied by ☐ a Search Report ☐ Communication which was cited in a corresponding ☐ PCT or ☐ Foreign counterpart application.

11. ☒ Charge any fees due under 37 C.F.R. §§1.17(h) and 1.17(p) to Deposit Account No.-110980.

☒ The Commissioner is hereby authorized to charge any additional fees which may be required for this Information Disclosure Statement, or credit any overpayment to Deposit Account No. 11-0980.

Respectfully submitted,
KING & SPALDING LLP

/ Robert T. Neufeld /
Robert T. Neufeld
Reg. No. 48,394

Correspondence Address:
King & Spalding LLP
1180 Peachtree Street
Atlanta, GA 30309
404-572-4600 Telephone
404-572-5100 Facsimile

UNITED STATES PATENT AND TRADEMARK OFFICE

UNITED STATES DEPARTMENT OF COMMERCE
United States Patent and Trademark Office
Address: COMMISSIONER FOR PATENTS
P.O. Box 1450
Alexandria, Virginia 22313-1450
www.uspto.gov

APPLICATION NUMBER	FILING OR 371(C) DATE	FIRST NAMED APPLICANT	ATTY. DOCKET NO./TITLE
15/811,062	11/13/2017	Steven Walter Pyshos	13682.227107

CONFIRMATION NO. 1254

PUBLICATION NOTICE

OC000000099084025

91764
King & Spalding LLP (Eaton/Cooper)
ATTN: IP Docketing Department
1100 Louisiana Street, Suite 4000
Houston, TX 77002-5213

Title: Configurable Lighting System

Publication No.US-2018-0116029-A1
Publication Date:04/26/2018

NOTICE OF PUBLICATION OF APPLICATION

The above-identified application will be electronically published as a patent application publication pursuant to 37 CFR 1.211, et seq. The patent application publication number and publication date are set forth above.

The publication may be accessed through the USPTO's publically available Searchable Databases via the Internet at www.uspto.gov. The direct link to access the publication is currently http://www.uspto.gov/patft/.

The publication process established by the Office does not provide for mailing a copy of the publication to applicant. A copy of the publication may be obtained from the Office upon payment of the appropriate fee set forth in 37 CFR 1.19(a)(1). Orders for copies of patent application publications are handled by the USPTO's Public Records Division. The Public Records Division can be reached by telephone at (571) 272-3150 or (800) 972-6382, by facsimile at (571) 273-3250, by mail addressed to the United States Patent and Trademark Office, Public Records Division, Alexandria, VA 22313-1450 or via the Internet.

In addition, information on the status of the application, including the mailing date of Office actions and the dates of receipt of correspondence filed in the Office, may also be accessed via the Internet through the Patent Electronic Business Center at www.uspto.gov using the public side of the Patent Application Information and Retrieval (PAIR) system. The direct link to access this status information is currently https://portal.uspto.gov/pair/PublicPair. Prior to publication, such status information is confidential and may only be obtained by applicant using the private side of PAIR.

Further assistance in electronically accessing the publication, or about PAIR, is available by calling the Patent Electronic Business Center at 1-866-217-9197.

Office of Data Managment, Application Assistance Unit (571) 272-4000, or (571) 272-4200, or 1-888-786-0101

Patents

IN THE UNITED STATES PATENT AND TRADEMARK OFFICE

In re Application of:	)	
	)	Atty. Dkt. No.: **13682.227107**
Steven Walter Pyshos	)	
	)	Group Art Unit: **2844**
Serial No. **15/811,062**	)	
	)	Confirmation No.: **1254**
Filed: **November 13, 2017**	)	
	)	Examiner: **Jimmy T. Vu**
For: **Configurable Lighting System**	)	

RESPONSE TO FIRST OFFICE ACTION

Commissioner for Patents
P. O. Box 1450
Alexandria, VA 22313-1450

Sir/ Madame:

In response to the Office Action dated April 9, 2018, please consider the remarks presented herein.

No claim amendments are presented at this time. Claims 1-20 are pending.

Remarks begin on page 2 of this document.

The Commissioner is hereby authorized to charge any necessary fees, including the terminal disclaimer fee, to Deposit Account 11-0980.

I hereby certify that this correspondence is being electronically filed via EFS-Web with: Commissioner for Patents, P.O. Box 1450, Alexandria, VA 22313-1450, on June 23, 2018.

/ Robert T. Neufeld /
Robert T. Neufeld, Reg. No. 48,394

DMSLIBRARY01\32385475.v1

REMARKS

In the Office Action, the Examiner indicates that claims 1-15 are allowed and that claims 16-20 are subject to a non-statutory double patenting rejection. Applicant thanks the Examiner for indicating that claims 1-15 are allowed.

Non-statutory Double Patenting Rejections

Pending claims 16-20 are rejected on the ground of non-statutory double patenting as allegedly being unpatentable over the claims of U.S. Patent No. 9,820,350. Without acquiescing to or agreeing with the Examiner's rejections and comments, and solely to advance the application in the U.S. Patent and Trademark Office, Applicant submits herewith a terminal disclaimer with respect to the above-noted patent which is commonly owned by the assignee.

The required fee for filing a terminal disclaimer also accompanies this response. Accordingly, withdrawal of the non-statutory obviousness type double patenting rejection is respectfully requested.

CONCLUSION

The foregoing is submitted as a full and complete response to the Action. Applicant submits that the application is now in condition for allowance and such action is hereby courteously solicited. If the Examiner believes that there are any issues that can be resolved by a telephone conference, or that there are any informalities that can be corrected by an Examiner's amendment, a telephone call to the undersigned at 404-572-3505 to discuss the same is respectfully requested.

Respectfully submitted,

/ Robert T. Neufeld /

Robert T. Neufeld
Reg. No. 48,394

King & Spalding LLP
1180 Peachtree Street, N.E., 34th Floor
Atlanta, Georgia 30309-3521

Electronic Patent Application Fee Transmittal	
Application Number:	15811062
Filing Date:	13-Nov-2017
Title of Invention:	Configurable Lighting System
First Named Inventor/Applicant Name:	Steven Walter Pyshos
Filer:	Robert Timothy Neufeld
Attorney Docket Number:	13682.227107

Filed as Large Entity

Filing Fees for Utility under 35 USC 111(a)

Description	Fee Code	Quantity	Amount	Sub-Total in USD($)
Basic Filing:				
Pages:				
Claims:				
Miscellaneous-Filing:				
Petition:				
Patent-Appeals-and-Interference:				
Post-Allowance-and-Post-Issuance:				
Extension-of-Time:				

Description	Fee Code	Quantity	Amount	Sub-Total in USD($)
Miscellaneous:				
STATUTORY OR TERMINAL DISCLAIMER	1814	1	160	160
		Total in USD ($)		**160**

Electronic Acknowledgement Receipt	
EFS ID:	32985202
Application Number:	15811062
International Application Number:	
Confirmation Number:	1254
Title of Invention:	Configurable Lighting System
First Named Inventor/Applicant Name:	Steven Walter Pyshos
Customer Number:	91764
Filer:	Robert Timothy Neufeld
Filer Authorized By:	
Attorney Docket Number:	13682.227107
Receipt Date:	23-JUN-2018
Filing Date:	13-NOV-2017
Time Stamp:	12:44:21
Application Type:	Utility under 35 USC 111(a)

Payment information:

Submitted with Payment	yes
Payment Type	CARD
Payment was successfully received in RAM	$160
RAM confirmation Number	062518INTEFSW12463300
Deposit Account	110980
Authorized User	Robert Neufeld
The Director of the USPTO is hereby authorized to charge indicated fees and credit any overpayment as follows: 37 CFR 1.16 (National application filing, search, and examination fees) 37 CFR 1.17 (Patent application and reexamination processing fees)	

37 CFR 1.19 (Document supply fees)

37 CFR 1.20 (Post Issuance fees)

37 CFR 1.21 (Miscellaneous fees and charges)

File Listing:

Document Number	Document Description	File Name	File Size(Bytes)/ Message Digest	Multi Part /.zip	Pages (if appl.)
1	Terminal Disclaimer Filed	Term_Disclaimer_227107.pdf	134268 c6b42f7920c554eaea8f73863ba87c7fec8a9cc5	no	2
Warnings:					
Information:					
2	Assignee showing of ownership per 37 CFR 3.73	Statement_373_227107.pdf	84797 4726ac9659db326ba9d3dbb91990de8c61c8e6f9	no	3
Warnings:					
Information:					
3	Power of Attorney	POA_227107.pdf	2911885 fd8d25219b3a6776de268aeebc15232365efc4a9	no	2
Warnings:					
Information:					
4	Amendment/Req. Reconsideration-After Non-Final Reject	ROA_227107.pdf	86038 1e3cd6f5af1ed63e83a384247a2d12e59ff77b48	no	2
Warnings:					
Information:					
5	Fee Worksheet (SB06)	fee-info.pdf	30366 3fa0709ce6dd2df34cd8c114fec8c29851abde66	no	2
Warnings:					
Information:					
		Total Files Size (in bytes):	3247354		

This Acknowledgement Receipt evidences receipt on the noted date by the USPTO of the indicated documents, characterized by the applicant, and including page counts, where applicable. It serves as evidence of receipt similar to a Post Card, as described in MPEP 503.

New Applications Under 35 U.S.C. 111
If a new application is being filed and the application includes the necessary components for a filing date (see 37 CFR 1.53(b)-(d) and MPEP 506), a Filing Receipt (37 CFR 1.54) will be issued in due course and the date shown on this Acknowledgement Receipt will establish the filing date of the application.
National Stage of an International Application under 35 U.S.C. 371
If a timely submission to enter the national stage of an international application is compliant with the conditions of 35 U.S.C. 371 and other applicable requirements a Form PCT/DO/EO/903 indicating acceptance of the application as a national stage submission under 35 U.S.C. 371 will be issued in addition to the Filing Receipt, in due course.
New International Application Filed with the USPTO as a Receiving Office
If a new international application is being filed and the international application includes the necessary components for an international filing date (see PCT Article 11 and MPEP 1810), a Notification of the International Application Number and of the International Filing Date (Form PCT/RO/105) will be issued in due course, subject to prescriptions concerning national security, and the date shown on this Acknowledgement Receipt will establish the international filing date of the application.

PTO/AIA/26 (04-14)
Approved for use through 07/31/2016. OMB 0651-0031
U.S. Patent and Trademark Office; U.S. DEPARTMENT OF COMMERCE
Under the Paperwork Reduction Act of 1995, no persons are required to respond to a collection of information unless it displays a valid OMB control number.

TERMINAL DISCLAIMER TO OBVIATE A DOUBLE PATENTING REJECTION OVER A "PRIOR" PATENT	Docket Number (Optional) 13682.227107

In re Application of: Steven Walter Pyshos

Application No.: 15/811,062

Filed: November 13, 2017

For: Configurable Lighting System

The applicant, Cooper Technologies Company, owner of 100 percent interest in the instant application hereby disclaims, except as provided below, the terminal part of the statutory term of any patent granted on the instant application which would extend beyond the expiration date of the full statutory term of **prior patent** No. 9,820,350 as the term of said **prior patent** is presently shortened by any terminal disclaimer. The applicant hereby agrees that any patent so granted on the instant application shall be enforceable only for and during such period that it and the **prior patent** are commonly owned. This agreement runs with any patent granted on the instant application and is binding upon the grantee, its successors or assigns.

In making the above disclaimer, the applicant does not disclaim the terminal part of the term of any patent granted on the instant application that would extend to the expiration date of the full statutory term of the **prior patent**, "as the term of said **prior patent** is presently shortened by any terminal disclaimer," in the event that said **prior patent** later:

expires for failure to pay a maintenance fee;
is held unenforceable;
is found invalid by a court of competent jurisdiction;
is statutorily disclaimed in whole or terminally disclaimed under 37 CFR 1.321;
has all claims canceled by a reexamination certificate;
is reissued; or
is in any manner terminated prior to the expiration of its full statutory term as presently shortened by any terminal disclaimer.

Check either box 1 or 2 below, if appropriate.

1. ☐ The undersigned is the applicant. If the applicant is an assignee, the undersigned is authorized to act on behalf of the assignee.

I hereby acknowledge that any willful false statements made are punishable under 18 U.S.C. 1001 by fine or imprisonment of not more than five (5) years, or both.

2. ☑ The undersigned is an attorney or agent of record. Reg. No. 48394

/ Robert T. Neufeld /	June 23, 2018
Signature	Date

Robert T. Neufeld
Typed or printed name

Attorney	404-572-3505
Title	Telephone Number

☑ Terminal disclaimer fee under 37 CFR 1.20(d) included.

WARNING: Information on this form may become public. Credit card information should not be included on this form. Provide credit card information and authorization on PTO-2038.

This collection of information is required by 37 CFR 1.321. The information is required to obtain or retain a benefit by the public which is to file (and by the USPTO to process) an application. Confidentiality is governed by 35 U.S.C. 122 and 37 CFR 1.11 and 1.14. This collection is estimated to take 12 minutes to complete, including gathering, preparing, and submitting the completed application form to the USPTO. Time will vary depending upon the individual case. Any comments on the amount of time you require to complete this form and/or suggestions for reducing this burden, should be sent to the Chief Information Officer, U.S. Patent and Trademark Office, U.S. Department of Commerce, P.O. Box 1450, Alexandria, VA 22313-1450. DO NOT SEND FEES OR COMPLETED FORMS TO THIS ADDRESS. **SEND TO: Commissioner for Patents, P.O. Box 1450, Alexandria, VA 22313-1450.**

If you need assistance in completing the form, call 1-800-PTO-9199 and select option 2.

Privacy Act Statement

The **Privacy Act of 1974 (P.L. 93-579)** requires that you be given certain information in connection with your submission of the attached form related to a patent application or patent. Accordingly, pursuant to the requirements of the Act, please be advised that: (1) the general authority for the collection of this information is 35 U.S.C. 2(b)(2); (2) furnishing of the information solicited is voluntary; and (3) the principal purpose for which the information is used by the U.S. Patent and Trademark Office is to process and/or examine your submission related to a patent application or patent. If you do not furnish the requested information, the U.S. Patent and Trademark Office may not be able to process and/or examine your submission, which may result in termination of proceedings or abandonment of the application or expiration of the patent.

The information provided by you in this form will be subject to the following routine uses:

1. The information on this form will be treated confidentially to the extent allowed under the Freedom of Information Act (5 U.S.C. 552) and the Privacy Act (5 U.S.C 552a). Records from this system of records may be disclosed to the Department of Justice to determine whether disclosure of these records is required by the Freedom of Information Act.
2. A record from this system of records may be disclosed, as a routine use, in the course of presenting evidence to a court, magistrate, or administrative tribunal, including disclosures to opposing counsel in the course of settlement negotiations.
3. A record in this system of records may be disclosed, as a routine use, to a Member of Congress submitting a request involving an individual, to whom the record pertains, when the individual has requested assistance from the Member with respect to the subject matter of the record.
4. A record in this system of records may be disclosed, as a routine use, to a contractor of the Agency having need for the information in order to perform a contract. Recipients of information shall be required to comply with the requirements of the Privacy Act of 1974, as amended, pursuant to 5 U.S.C. 552a(m).
5. A record related to an International Application filed under the Patent Cooperation Treaty in this system of records may be disclosed, as a routine use, to the International Bureau of the World Intellectual Property Organization, pursuant to the Patent Cooperation Treaty.
6. A record in this system of records may be disclosed, as a routine use, to another federal agency for purposes of National Security review (35 U.S.C. 181) and for review pursuant to the Atomic Energy Act (42 U.S.C. 218(c)).
7. A record from this system of records may be disclosed, as a routine use, to the Administrator, General Services, or his/her designee, during an inspection of records conducted by GSA as part of that agency's responsibility to recommend improvements in records management practices and programs, under authority of 44 U.S.C. 2904 and 2906. Such disclosure shall be made in accordance with the GSA regulations governing inspection of records for this purpose, and any other relevant (*i.e.*, GSA or Commerce) directive. Such disclosure shall not be used to make determinations about individuals.
8. A record from this system of records may be disclosed, as a routine use, to the public after either publication of the application pursuant to 35 U.S.C. 122(b) or issuance of a patent pursuant to 35 U.S.C. 151. Further, a record may be disclosed, subject to the limitations of 37 CFR 1.14, as a routine use, to the public if the record was filed in an application which became abandoned or in which the proceedings were terminated and which application is referenced by either a published application, an application open to public inspection or an issued patent.
9. A record from this system of records may be disclosed, as a routine use, to a Federal, State, or local law enforcement agency, if the USPTO becomes aware of a violation or potential violation of law or regulation.

PTO/AIA/96 (08-12)
Approved for use through 01/31/2013. OMB 0651-0031
U.S. Patent and Trademark Office; U.S. DEPARTMENT OF COMMERCE
Under the Paperwork Reduction Act of 1995, no persons are required to respond to a collection of information unless it displays a valid OMB control number.

STATEMENT UNDER 37 CFR 3.73(c)

Applicant/Patent Owner: Cooper Technologies Company

Application No./Patent No.: 15/811,062 Filed/Issue Date: November 13, 2017

Titled: Configurable Lighting System

Cooper Technologies Company, a corporation

(Name of Assignee) (Type of Assignee, e.g., corporation, partnership, university, government agency, etc.)

states that, for the patent application/patent identified above, it is (choose **one** of options 1, 2, 3 or 4 below):

1. ☑ The assignee of the entire right, title, and interest.

2. ☐ An assignee of less than the entire right, title, and interest (check applicable box):

☐ The extent (by percentage) of its ownership interest is _____%. Additional Statement(s) by the owners holding the balance of the interest must be submitted to account for 100% of the ownership interest.

☐ There are unspecified percentages of ownership. The other parties, including inventors, who together own the entire right, title and interest are:

Additional Statement(s) by the owner(s) holding the balance of the interest must be submitted to account for the entire right, title, and interest.

3. ☐ The assignee of an undivided interest in the entirety (a complete assignment from one of the joint inventors was made). The other parties, including inventors, who together own the entire right, title, and interest are:

Additional Statement(s) by the owner(s) holding the balance of the interest must be submitted to account for the entire right, title, and interest.

4. ☐ The recipient, via a court proceeding or the like (*e.g.*, bankruptcy, probate), of an undivided interest in the entirety (a complete transfer of ownership interest was made). The certified document(s) showing the transfer is attached.

The interest identified in option 1, 2 or 3 above (not option 4) is evidenced by either (choose **one** of options A or B below):

A. ☑ An assignment from the inventor(s) of the patent application/patent identified above. The assignment was recorded in the United States Patent and Trademark Office at Reel 044661, Frame 0934, or for which a copy thereof is attached.

B. ☐ A chain of title from the inventor(s), of the patent application/patent identified above, to the current assignee as follows:

1. From: _____ To: _____

The document was recorded in the United States Patent and Trademark Office at

Reel _____, Frame _____, or for which a copy thereof is attached.

2. From: _____ To: _____

The document was recorded in the United States Patent and Trademark Office at

Reel _____, Frame _____, or for which a copy thereof is attached.

This collection of information is required by 37 CFR 3.73(b). The information is required to obtain or retain a benefit by the public which is to file (and by the USPTO to process) an application. Confidentiality is governed by 35 U.S.C. 122 and 37 CFR 1.11 and 1.14. This collection is estimated to take 12 minutes to complete, including gathering, preparing, and submitting the completed application form to the USPTO. Time will vary depending upon the individual case. Any comments on the amount of time you require to complete this form and/or suggestions for reducing this burden, should be sent to the Chief Information Officer, U.S. Patent and Trademark Office, U.S. Department of Commerce, P.O. Box 1450, Alexandria, VA 22313-1450. DO NOT SEND FEES OR COMPLETED FORMS TO THIS ADDRESS. **SEND TO: Commissioner for Patents, P.O. Box 1450, Alexandria, VA 22313-1450.**

If you need assistance in completing the form, call 1-800-PTO-9199 and select option 2.

Under the Paperwork Reduction Act of 1995, no persons are required to respond to a collection of information unless it displays a valid OMB control number.

STATEMENT UNDER 37 CFR 3.73(c)

3. From: _____ To: _____

The document was recorded in the United States Patent and Trademark Office at

Reel _____, Frame _____, or for which a copy thereof is attached.

4. From: _____ To: _____

The document was recorded in the United States Patent and Trademark Office at

Reel _____, Frame _____, or for which a copy thereof is attached.

5. From: _____ To: _____

The document was recorded in the United States Patent and Trademark Office at

Reel _____, Frame _____, or for which a copy thereof is attached.

6. From: _____ To: _____

The document was recorded in the United States Patent and Trademark Office at

Reel _____, Frame _____, or for which a copy thereof is attached.

☐ Additional documents in the chain of title are listed on a supplemental sheet(s).

☑ As required by 37 CFR 3.73(c)(1)(i), the documentary evidence of the chain of title from the original owner to the assignee was, or concurrently is being, submitted for recordation pursuant to 37 CFR 3.11.

[NOTE: A separate copy (i.e., a true copy of the original assignment document(s)) must be submitted to Assignment Division in accordance with 37 CFR Part 3, to record the assignment in the records of the USPTO. See MPEP 302.08]

The undersigned (whose title is supplied below) is authorized to act on behalf of the assignee.

/ Robert T. Neufeld /	June 23, 2018
Signature	Date
Robert T. Neufeld	48,394
Printed or Typed Name	Title or Registration Number

Privacy Act Statement

The **Privacy Act of 1974 (P.L. 93-579)** requires that you be given certain information in connection with your submission of the attached form related to a patent application or patent. Accordingly, pursuant to the requirements of the Act, please be advised that: (1) the general authority for the collection of this information is 35 U.S.C. 2(b)(2); (2) furnishing of the information solicited is voluntary; and (3) the principal purpose for which the information is used by the U.S. Patent and Trademark Office is to process and/or examine your submission related to a patent application or patent. If you do not furnish the requested information, the U.S. Patent and Trademark Office may not be able to process and/or examine your submission, which may result in termination of proceedings or abandonment of the application or expiration of the patent.

The information provided by you in this form will be subject to the following routine uses:

1. The information on this form will be treated confidentially to the extent allowed under the Freedom of Information Act (5 U.S.C. 552) and the Privacy Act (5 U.S.C 552a). Records from this system of records may be disclosed to the Department of Justice to determine whether disclosure of these records is required by the Freedom of Information Act.
2. A record from this system of records may be disclosed, as a routine use, in the course of presenting evidence to a court, magistrate, or administrative tribunal, including disclosures to opposing counsel in the course of settlement negotiations.
3. A record in this system of records may be disclosed, as a routine use, to a Member of Congress submitting a request involving an individual, to whom the record pertains, when the individual has requested assistance from the Member with respect to the subject matter of the record.
4. A record in this system of records may be disclosed, as a routine use, to a contractor of the Agency having need for the information in order to perform a contract. Recipients of information shall be required to comply with the requirements of the Privacy Act of 1974, as amended, pursuant to 5 U.S.C. 552a(m).
5. A record related to an International Application filed under the Patent Cooperation Treaty in this system of records may be disclosed, as a routine use, to the International Bureau of the World Intellectual Property Organization, pursuant to the Patent Cooperation Treaty.
6. A record in this system of records may be disclosed, as a routine use, to another federal agency for purposes of National Security review (35 U.S.C. 181) and for review pursuant to the Atomic Energy Act (42 U.S.C. 218(c)).
7. A record from this system of records may be disclosed, as a routine use, to the Administrator, General Services, or his/her designee, during an inspection of records conducted by GSA as part of that agency's responsibility to recommend improvements in records management practices and programs, under authority of 44 U.S.C. 2904 and 2906. Such disclosure shall be made in accordance with the GSA regulations governing inspection of records for this purpose, and any other relevant (*i.e.*, GSA or Commerce) directive. Such disclosure shall not be used to make determinations about individuals.
8. A record from this system of records may be disclosed, as a routine use, to the public after either publication of the application pursuant to 35 U.S.C. 122(b) or issuance of a patent pursuant to 35 U.S.C. 151. Further, a record may be disclosed, subject to the limitations of 37 CFR 1.14, as a routine use, to the public if the record was filed in an application which became abandoned or in which the proceedings were terminated and which application is referenced by either a published application, an application open to public inspection or an issued patent.
9. A record from this system of records may be disclosed, as a routine use, to a Federal, State, or local law enforcement agency, if the USPTO becomes aware of a violation or potential violation of law or regulation.

PTO/AIA/80 (07-12)
Approved for use through 11/30/2014. OMB 0651-0035
U.S. Patent and Trademark Office; U.S DEPARTMENT OF COMMERCE
Under the Paperwork Reduction Act of 1995, no persons are required to respond to a collection of information unless it displays a valid OMB control number.

POWER OF ATTORNEY TO PROSECUTE APPLICATIONS BEFORE THE USPTO

I hereby revoke all previous powers of attorney given in the application identified in the attached statement under 37 CFR 3.73(c).

I hereby appoint:

[■] Practitioners associated with Customer Number: 91764

OR

[ ] Practitioner(s) named below (if more than ten patent practitioners are to be named, then a customer number must be used):

Name	Registration Number	Name	Registration Number

As attorney(s) or agent(s) to represent the undersigned before the United States Patent and Trademark Office (USPTO) in connection with any and all patent applications assigned only to the undersigned according to the USPTO assignment records or assignments documents attached to this form in accordance with 37 CFR 3.73(c).

Please change the correspondence address for the application identified in the attached statement under 37 CFR 3.73(c) to:

[■] The address associated with Customer Number: 91764

OR

[ ] Firm or Individual Name			
Address			
City		State	Zip
Country			
Telephone		Email	

Assignee Name and Address: Cooper Technologies Company
600 Travis Street, Suite 5600
Houston, Texas 77002

A copy of this form, together with a statement under 37 CFR 3.73(c) (Form PTO/AIA/96 or equivalent) is required to be Filed in each application in which this form is used. The statement under 37 CFR 3.73(c) may be completed by one of The practitioners appointed in this form, and must identify the application in which this Power of Attorney is to be filed.

SIGNATURE of Assignee of Record

The individual whose signature and title is supplied below is authorized to act on behalf of the assignee

Signature		Date	3-15-17
Name	Lizbeth L. Wright	Telephone	440-523-5161
Title	Vice President and Secretary		

This collection of information is required by 37 CFR 1.31, 1.32 and 1.33. The information is required to obtain or retain a benefit by the public which is to file (and by the USPTO to process) an application. Confidentiality is governed by 35 U.S.C. 122 and 37 CFR 1.11 and 1.14. This collection is estimated to take 3 minutes to complete, including gathering, preparing, and submitting the completed application form to the USPTO. Time will vary depending upon the individual case. Any comments on the amount of time you require to complete this form and/or suggestions for reducing this burden, should be sent to the Chief Information Officer, U.S. Patent and Trademark Office, U.S. Department of Commerce, P.O. Box 1450, Alexandria, VA 22313-1450. DO NOT SEND FEES OR COMPLETED FORMS TO THIS ADDRESS. **SEND TO: Commissioner for Patents, P.O. Box 1450, Alexandria, VA 22313-1450.**

If you need assistance in completing the form, call 1-800-PTO-9199 and select option 2.

Privacy Act Statement

The **Privacy Act of 1974 (P.L. 93-579)** requires that you be given certain information in connection with your submission of the attached form related to a patent application or patent. Accordingly, pursuant to the requirements of the Act, please be advised that: (1) the general authority for the collection of this information is 35 U.S.C. 2(b)(2); (2) furnishing of the information solicited is voluntary; and (3) the principal purpose for which the information is used by the U.S. Patent and Trademark Office is to process and/or examine your submission related to a patent application or patent. If you do not furnish the requested information, the U.S. Patent and Trademark Office may not be able to process and/or examine your submission, which may result in termination of proceedings or abandonment of the application or expiration of the patent.

The information provided by you in this form will be subject to the following routine uses:

1. The information on this form will be treated confidentially to the extent allowed under the Freedom of Information Act (5 U.S.C. 552) and the Privacy Act (5 U.S.C 552a). Records from this system of records may be disclosed to the Department of Justice to determine whether disclosure of these records is required by the Freedom of Information Act.
2. A record from this system of records may be disclosed, as a routine use, in the course of presenting evidence to a court, magistrate, or administrative tribunal, including disclosures to opposing counsel in the course of settlement negotiations.
3. A record in this system of records may be disclosed, as a routine use, to a Member of Congress submitting a request involving an individual, to whom the record pertains, when the individual has requested assistance from the Member with respect to the subject matter of the record.
4. A record in this system of records may be disclosed, as a routine use, to a contractor of the Agency having need for the information in order to perform a contract. Recipients of information shall be required to comply with the requirements of the Privacy Act of 1974, as amended, pursuant to 5 U.S.C. 552a(m).
5. A record related to an International Application filed under the Patent Cooperation Treaty in this system of records may be disclosed, as a routine use, to the International Bureau of the World Intellectual Property Organization, pursuant to the Patent Cooperation Treaty.
6. A record in this system of records may be disclosed, as a routine use, to another federal agency for purposes of National Security review (35 U.S.C. 181) and for review pursuant to the Atomic Energy Act (42 U.S.C. 218(c)).
7. A record from this system of records may be disclosed, as a routine use, to the Administrator, General Services, or his/her designee, during an inspection of records conducted by GSA as part of that agency's responsibility to recommend improvements in records management practices and programs, under authority of 44 U.S.C. 2904 and 2906. Such disclosure shall be made in accordance with the GSA regulations governing inspection of records for this purpose, and any other relevant (*i.e.*, GSA or Commerce) directive. Such disclosure shall not be used to make determinations about individuals.
8. A record from this system of records may be disclosed, as a routine use, to the public after either publication of the application pursuant to 35 U.S.C. 122(b) or issuance of a patent pursuant to 35 U.S.C. 151. Further, a record may be disclosed, subject to the limitations of 37 CFR 1.14, as a routine use, to the public if the record was filed in an application which became abandoned or in which the proceedings were terminated and which application is referenced by either a published application, an application open to public inspection or an issued patent.
9. A record from this system of records may be disclosed, as a routine use, to a Federal, State, or local law enforcement agency, if the USPTO becomes aware of a violation or potential violation of law or regulation.

Application Number	Application/Control No.	Applicant(s)/Patent under Reexamination
	15/811,062	PYSHOS ET AL.

Document Code - DISQ	Internal Document – DO NOT MAIL

TERMINAL DISCLAIMER	☒ APPROVED	☐ DISAPPROVED
Date Filed : 6/23/18	This patent is subject to a Terminal Disclaimer	

Approved/Disapproved by:
Lawana Hixon

U.S. Patent and Trademark Office

UNITED STATES PATENT AND TRADEMARK OFFICE

UNITED STATES DEPARTMENT OF COMMERCE
United States Patent and Trademark Office
Address: COMMISSIONER FOR PATENTS
P.O. Box 1450
Alexandria, Virginia 22313-1450
www.uspto.gov

APPLICATION NUMBER	FILING OR 371(C) DATE	FIRST NAMED APPLICANT	ATTY. DOCKET NO./TITLE
15/811,062	11/13/2017	Steven Walter Pyshos	13682.227107

CONFIRMATION NO. 1254

POA ACCEPTANCE LETTER

91764
King & Spalding LLP (Eaton/Cooper)
ATTN: IP Docketing Department
1100 Louisiana Street, Suite 4000
Houston, TX 77002-5213

OC000000100589243

Date Mailed: 06/28/2018

NOTICE OF ACCEPTANCE OF POWER OF ATTORNEY

This is in response to the Power of Attorney filed 06/23/2018.

The Power of Attorney in this application is accepted. Correspondence in this application will be mailed to the above address as provided by 37 CFR 1.33.

Questions about the contents of this notice and the requirements it sets forth should be directed to the Office of Data Management, Application Assistance Unit, at **(571) 272-4000** or **(571) 272-4200** or **1-888-786-0101**.

/zabraha/

UNITED STATES PATENT AND TRADEMARK OFFICE

UNITED STATES DEPARTMENT OF COMMERCE
United States Patent and Trademark Office
Address: COMMISSIONER FOR PATENTS
P.O. Box 1450
Alexandria, Virginia 22313-1450
www.uspto.gov

NOTICE OF ALLOWANCE AND FEE(S) DUE

91764 7590 10/16/2018
King & Spalding LLP (Eaton/Cooper)
ATTN: IP Docketing Department
1100 Louisiana Street, Suite 4000
Houston, TX 77002-5213

EXAMINER
VU, JIMMY T

ART UNIT	PAPER NUMBER
2844	

DATE MAILED: 10/16/2018

APPLICATION NO.	FILING DATE	FIRST NAMED INVENTOR	ATTORNEY DOCKET NO.	CONFIRMATION NO.
15/811,062	11/13/2017	Steven Walter Pyshos	13682.227107	1254

TITLE OF INVENTION: Configurable Lighting System

APPLN. TYPE	ENTITY STATUS	ISSUE FEE DUE	PUBLICATION FEE DUE	PREV. PAID ISSUE FEE	TOTAL FEE(S) DUE	DATE DUE
nonprovisional	UNDISCOUNTED	$1000	$0	$0	$1000	01/16/2019

THE APPLICATION IDENTIFIED ABOVE HAS BEEN EXAMINED AND IS ALLOWED FOR ISSUANCE AS A PATENT. PROSECUTION ON THE MERITS IS CLOSED. THIS NOTICE OF ALLOWANCE IS NOT A GRANT OF PATENT RIGHTS. THIS APPLICATION IS SUBJECT TO WITHDRAWAL FROM ISSUE AT THE INITIATIVE OF THE OFFICE OR UPON PETITION BY THE APPLICANT. SEE 37 CFR 1.313 AND MPEP 1308.

THE ISSUE FEE AND PUBLICATION FEE (IF REQUIRED) MUST BE PAID WITHIN THREE MONTHS FROM THE MAILING DATE OF THIS NOTICE OR THIS APPLICATION SHALL BE REGARDED AS ABANDONED. THIS STATUTORY PERIOD CANNOT BE EXTENDED. SEE 35 U.S.C. 151. THE ISSUE FEE DUE INDICATED ABOVE DOES NOT REFLECT A CREDIT FOR ANY PREVIOUSLY PAID ISSUE FEE IN THIS APPLICATION. IF AN ISSUE FEE HAS PREVIOUSLY BEEN PAID IN THIS APPLICATION (AS SHOWN ABOVE), THE RETURN OF PART B OF THIS FORM WILL BE CONSIDERED A REQUEST TO REAPPLY THE PREVIOUSLY PAID ISSUE FEE TOWARD THE ISSUE FEE NOW DUE.

HOW TO REPLY TO THIS NOTICE:

I. Review the ENTITY STATUS shown above. If the ENTITY STATUS is shown as SMALL or MICRO, verify whether entitlement to that entity status still applies.

If the ENTITY STATUS is the same as shown above, pay the TOTAL FEE(S) DUE shown above.

If the ENTITY STATUS is changed from that shown above, on PART B - FEE(S) TRANSMITTAL, complete section number 5 titled "Change in Entity Status (from status indicated above)".

For purposes of this notice, small entity fees are 1/2 the amount of undiscounted fees, and micro entity fees are 1/2 the amount of small entity fees.

II. PART B - FEE(S) TRANSMITTAL, or its equivalent, must be completed and returned to the United States Patent and Trademark Office (USPTO) with your ISSUE FEE and PUBLICATION FEE (if required). If you are charging the fee(s) to your deposit account, section "4b" of Part B - Fee(s) Transmittal should be completed and an extra copy of the form should be submitted. If an equivalent of Part B is filed, a request to reapply a previously paid issue fee must be clearly made, and delays in processing may occur due to the difficulty in recognizing the paper as an equivalent of Part B.

III. All communications regarding this application must give the application number. Please direct all communications prior to issuance to Mail Stop ISSUE FEE unless advised to the contrary.

IMPORTANT REMINDER: Maintenance fees are due in utility patents issuing on applications filed on or after Dec. 12, 1980. It is patentee's responsibility to ensure timely payment of maintenance fees when due. More information is available at www.uspto.gov/PatentMaintenanceFees.

PTOL-85 (Rev. 02/11)

PART B - FEE(S) TRANSMITTAL

Complete and send this form, together with applicable fee(s), to: Mail **Mail Stop ISSUE FEE**
Commissioner for Patents
P.O. Box 1450
Alexandria, Virginia 22313-1450
or Fax (571)-273-2885

INSTRUCTIONS: This form should be used for transmitting the ISSUE FEE and PUBLICATION FEE (if required). Blocks 1 through 5 should be completed where appropriate. All further correspondence including the Patent, advance orders and notification of maintenance fees will be mailed to the current correspondence address as indicated unless corrected below or directed otherwise in Block 1, by (a) specifying a new correspondence address; and/or (b) indicating a separate "FEE ADDRESS" for maintenance fee notifications.

CURRENT CORRESPONDENCE ADDRESS (Note: Use Block 1 for any change of address)

91764 7590 10/16/2018
King & Spalding LLP (Eaton/Cooper)
ATTN: IP Docketing Department
1100 Louisiana Street, Suite 4000
Houston, TX 77002-5213

Note: A certificate of mailing can only be used for domestic mailings of the Fee(s) Transmittal. This certificate cannot be used for any other accompanying papers. Each additional paper, such as an assignment or formal drawing, must have its own certificate of mailing or transmission.

Certificate of Mailing or Transmission
I hereby certify that this Fee(s) Transmittal is being deposited with the United States Postal Service with sufficient postage for first class mail in an envelope addressed to the Mail Stop ISSUE FEE address above, or being facsimile transmitted to the USPTO (571) 273-2885, on the date indicated below.

(Depositor's name)
(Signature)
(Date)

APPLICATION NO.	FILING DATE	FIRST NAMED INVENTOR	ATTORNEY DOCKET NO.	CONFIRMATION NO.
15/811,062	11/13/2017	Steven Walter Pyshos	13682.227107	1254

TITLE OF INVENTION: Configurable Lighting System

APPLN. TYPE	ENTITY STATUS	ISSUE FEE DUE	PUBLICATION FEE DUE	PREV. PAID ISSUE FEE	TOTAL FEE(S) DUE	DATE DUE
nonprovisional	UNDISCOUNTED	$1000	$0	$0	$1000	01/16/2019

EXAMINER	ART UNIT	CLASS-SUBCLASS
VU, JIMMY T	2844	315-294000

1. Change of correspondence address or indication of "Fee Address" (37 CFR 1.363).
❑ Change of correspondence address (or Change of Correspondence Address form PTO/SB/122) attached.
❑ "Fee Address" indication (or "Fee Address" Indication form PTO/SB/47; Rev 03-02 or more recent) attached. **Use of a Customer Number is required.**

2. For printing on the patent front page, list
(1) The names of up to 3 registered patent attorneys or agents OR, alternatively,
(2) The name of a single firm (having as a member a registered attorney or agent) and the names of up to 2 registered patent attorneys or agents. If no name is listed, no name will be printed.
1_____
2_____
3_____

3. ASSIGNEE NAME AND RESIDENCE DATA TO BE PRINTED ON THE PATENT (print or type)

PLEASE NOTE: Unless an assignee is identified below, no assignee data will appear on the patent. If an assignee is identified below, the document has been filed for recordation as set forth in 37 CFR 3.11. Completion of this form is NOT a substitute for filing an assignment.

(A) NAME OF ASSIGNEE (B) RESIDENCE: (CITY and STATE OR COUNTRY)

Please check the appropriate assignee category or categories (will not be printed on the patent) : ❑ Individual ❑ Corporation or other private group entity ❑ Government

4a. The following fee(s) are submitted:
❑ Issue Fee
❑ Publication Fee (No small entity discount permitted)
❑ Advance Order - # of Copies _____

4b. Payment of Fee(s): (**Please first reapply any previously paid issue fee shown above)**
❑ A check is enclosed.
❑ Payment by credit card. Form PTO-2038 is attached.
❑ The director is hereby authorized to charge the required fee(s), any deficiency, or credits any overpayment, to Deposit Account Number _____ (enclose an extra copy of this form).

5. **Change in Entity Status** (from status indicated above)
❑ Applicant certifying micro entity status. See 37 CFR 1.29 — NOTE: Absent a valid certification of Micro Entity Status (see forms PTO/SB/15A and 15B), issue fee payment in the micro entity amount will not be accepted at the risk of application abandonment.
❑ Applicant asserting small entity status. See 37 CFR 1.27 — NOTE: If the application was previously under micro entity status, checking this box will be taken to be a notification of loss of entitlement to micro entity status.
❑ Applicant changing to regular undiscounted fee status. — NOTE: Checking this box will be taken to be a notification of loss of entitlement to small or micro entity status, as applicable.

NOTE: This form must be signed in accordance with 37 CFR 1.31 and 1.33. See 37 CFR 1.4 for signature requirements and certifications.

Authorized Signature _____ Date _____

Typed or printed name _____ Registration No. _____

PTOL-85 Part B (10-13) Approved for use through 10/31/2013. OMB 0651-0033 U.S. Patent and Trademark Office; U.S. DEPARTMENT OF COMMERCE

Luminex v. Signify
Luminex Exhibit 1021
Page 117

UNITED STATES PATENT AND TRADEMARK OFFICE

UNITED STATES DEPARTMENT OF COMMERCE
United States Patent and Trademark Office
Address: COMMISSIONER FOR PATENTS
P.O. Box 1450
Alexandria, Virginia 22313-1450
www.uspto.gov

APPLICATION NO.	FILING DATE	FIRST NAMED INVENTOR	ATTORNEY DOCKET NO.	CONFIRMATION NO.
15/811,062	11/13/2017	Steven Walter Pyshos	13682.227107	1254

91764 7590 10/16/2018
King & Spalding LLP (Eaton/Cooper)
ATTN: IP Docketing Department
1100 Louisiana Street, Suite 4000
Houston, TX 77002-5213

EXAMINER
VU, JIMMY T

ART UNIT	PAPER NUMBER
2844	

DATE MAILED: 10/16/2018

Determination of Patent Term Adjustment under 35 U.S.C. 154 (b)
(Applications filed on or after May 29, 2000)

The Office has discontinued providing a Patent Term Adjustment (PTA) calculation with the Notice of Allowance.

Section 1(h)(2) of the AIA Technical Corrections Act amended 35 U.S.C. 154(b)(3)(B)(i) to eliminate the requirement that the Office provide a patent term adjustment determination with the notice of allowance. See Revisions to Patent Term Adjustment, 78 Fed. Reg. 19416, 19417 (Apr. 1, 2013). Therefore, the Office is no longer providing an initial patent term adjustment determination with the notice of allowance. The Office will continue to provide a patent term adjustment determination with the Issue Notification Letter that is mailed to applicant approximately three weeks prior to the issue date of the patent, and will include the patent term adjustment on the patent. Any request for reconsideration of the patent term adjustment determination (or reinstatement of patent term adjustment) should follow the process outlined in 37 CFR 1.705.

Any questions regarding the Patent Term Extension or Adjustment determination should be directed to the Office of Patent Legal Administration at (571)-272-7702. Questions relating to issue and publication fee payments should be directed to the Customer Service Center of the Office of Patent Publication at 1-(888)-786-0101 or (571)-272-4200.

PTOL-85 (Rev. 02/11)

OMB Clearance and PRA Burden Statement for PTOL-85 Part B

The Paperwork Reduction Act (PRA) of 1995 requires Federal agencies to obtain Office of Management and Budget approval before requesting most types of information from the public. When OMB approves an agency request to collect information from the public, OMB (i) provides a valid OMB Control Number and expiration date for the agency to display on the instrument that will be used to collect the information and (ii) requires the agency to inform the public about the OMB Control Number's legal significance in accordance with 5 CFR 1320.5(b).

The information collected by PTOL-85 Part B is required by 37 CFR 1.311. The information is required to obtain or retain a benefit by the public which is to file (and by the USPTO to process) an application. Confidentiality is governed by 35 U.S.C. 122 and 37 CFR 1.14. This collection is estimated to take 12 minutes to complete, including gathering, preparing, and submitting the completed application form to the USPTO. Time will vary depending upon the individual case. Any comments on the amount of time you require to complete this form and/or suggestions for reducing this burden, should be sent to the Chief Information Officer, U.S. Patent and Trademark Office, U.S. Department of Commerce, P.O. Box 1450, Alexandria, Virginia 22313-1450. DO NOT SEND FEES OR COMPLETED FORMS TO THIS ADDRESS. SEND TO: Commissioner for Patents, P.O. Box 1450, Alexandria, Virginia 22313-1450. Under the Paperwork Reduction Act of 1995, no persons are required to respond to a collection of information unless it displays a valid OMB control number.

Privacy Act Statement

The Privacy Act of 1974 (P.L. 93-579) requires that you be given certain information in connection with your submission of the attached form related to a patent application or patent. Accordingly, pursuant to the requirements of the Act, please be advised that: (1) the general authority for the collection of this information is 35 U.S.C. 2(b)(2); (2) furnishing of the information solicited is voluntary; and (3) the principal purpose for which the information is used by the U.S. Patent and Trademark Office is to process and/or examine your submission related to a patent application or patent. If you do not furnish the requested information, the U.S. Patent and Trademark Office may not be able to process and/or examine your submission, which may result in termination of proceedings or abandonment of the application or expiration of the patent.

The information provided by you in this form will be subject to the following routine uses:

1. The information on this form will be treated confidentially to the extent allowed under the Freedom of Information Act (5 U.S.C. 552) and the Privacy Act (5 U.S.C 552a). Records from this system of records may be disclosed to the Department of Justice to determine whether disclosure of these records is required by the Freedom of Information Act.
2. A record from this system of records may be disclosed, as a routine use, in the course of presenting evidence to a court, magistrate, or administrative tribunal, including disclosures to opposing counsel in the course of settlement negotiations.
3. A record in this system of records may be disclosed, as a routine use, to a Member of Congress submitting a request involving an individual, to whom the record pertains, when the individual has requested assistance from the Member with respect to the subject matter of the record.
4. A record in this system of records may be disclosed, as a routine use, to a contractor of the Agency having need for the information in order to perform a contract. Recipients of information shall be required to comply with the requirements of the Privacy Act of 1974, as amended, pursuant to 5 U.S.C. 552a(m).
5. A record related to an International Application filed under the Patent Cooperation Treaty in this system of records may be disclosed, as a routine use, to the International Bureau of the World Intellectual Property Organization, pursuant to the Patent Cooperation Treaty.
6. A record in this system of records may be disclosed, as a routine use, to another federal agency for purposes of National Security review (35 U.S.C. 181) and for review pursuant to the Atomic Energy Act (42 U.S.C. 218(c)).
7. A record from this system of records may be disclosed, as a routine use, to the Administrator, General Services, or his/her designee, during an inspection of records conducted by GSA as part of that agency's responsibility to recommend improvements in records management practices and programs, under authority of 44 U.S.C. 2904 and 2906. Such disclosure shall be made in accordance with the GSA regulations governing inspection of records for this purpose, and any other relevant (i.e., GSA or Commerce) directive. Such disclosure shall not be used to make determinations about individuals.
8. A record from this system of records may be disclosed, as a routine use, to the public after either publication of the application pursuant to 35 U.S.C. 122(b) or issuance of a patent pursuant to 35 U.S.C. 151. Further, a record may be disclosed, subject to the limitations of 37 CFR 1.14, as a routine use, to the public if the record was filed in an application which became abandoned or in which the proceedings were terminated and which application is referenced by either a published application, an application open to public inspection or an issued patent.
9. A record from this system of records may be disclosed, as a routine use, to a Federal, State, or local law enforcement agency, if the USPTO becomes aware of a violation or potential violation of law or regulation.

Notice of Allowability	Application No. 15/811,062	Applicant(s) PYSHOS ET AL.	
	Examiner JIMMY VU	Art Unit 2844	AIA (First Inventor to File) Status Yes

-- The MAILING DATE of this communication appears on the cover sheet with the correspondence address--

All claims being allowable, PROSECUTION ON THE MERITS IS (OR REMAINS) CLOSED in this application. If not included herewith (or previously mailed), a Notice of Allowance (PTOL-85) or other appropriate communication will be mailed in due course. **THIS NOTICE OF ALLOWABILITY IS NOT A GRANT OF PATENT RIGHTS.** This application is subject to withdrawal from issue at the initiative of the Office or upon petition by the applicant. See 37 CFR 1.313 and MPEP 1308.

1. ☒ This communication is responsive to *amendment filed on 06/23/2018*.
   ☐ A declaration(s)/affidavit(s) under **37 CFR 1.130(b)** was/were filed on_____.
2. ☐ An election was made by the applicant in response to a restriction requirement set forth during the interview on _____; the restriction requirement and election have been incorporated into this action.
3. ☒ The allowed claim(s) is/are *1-20*. As a result of the allowed claim(s), you may be eligible to benefit from the **Patent Prosecution Highway** program at a participating intellectual property office for the corresponding application. For more information, please see http://www.uspto.gov/patents/init_events/pph/index.jsp or send an inquiry to PPHfeedback@uspto.gov.
4. ☐ Acknowledgment is made of a claim for foreign priority under 35 U.S.C. § 119(a)-(d) or (f).

   Certified copies:

   a) ☐ All b) ☐ Some *c) ☐ None of the:
   1. ☐ Certified copies of the priority documents have been received.
   2. ☐ Certified copies of the priority documents have been received in Application No. _____ .
   3. ☐ Copies of the certified copies of the priority documents have been received in this national stage application from the International Bureau (PCT Rule 17.2(a)).

   * Certified copies not received: _____.

Applicant has THREE MONTHS FROM THE "MAILING DATE" of this communication to file a reply complying with the requirements noted below. Failure to timely comply will result in ABANDONMENT of this application.
THIS THREE-MONTH PERIOD IS NOT EXTENDABLE.

5. ☐ CORRECTED DRAWINGS (as "replacement sheets") must be submitted.
   ☐ including changes required by the attached Examiner's Amendment / Comment or in the Office action of Paper No./Mail Date _____.

   Identifying indicia such as the application number (see 37 CFR 1.84(c)) should be written on the drawings in the front (not the back) of each sheet. Replacement sheet(s) should be labeled as such in the header according to 37 CFR 1.121(d).
6. ☐ DEPOSIT OF and/or INFORMATION about the deposit of BIOLOGICAL MATERIAL must be submitted. Note the attached Examiner's comment regarding REQUIREMENT FOR THE DEPOSIT OF BIOLOGICAL MATERIAL.

Attachment(s)

1. ☒ Notice of References Cited (PTO-892)
2. ☒ Information Disclosure Statements (PTO/SB/08), Paper No./Mail Date 04/18/18
3. ☐ Examiner's Comment Regarding Requirement for Deposit of Biological Material
4. ☐ Interview Summary (PTO-413), Paper No./Mail Date _____ .
5. ☒ Examiner's Amendment/Comment
6. ☒ Examiner's Statement of Reasons for Allowance
7. ☐ Other _____.

/JIMMY VU/
Primary Examiner, Art Unit 2844

Luminex v. Signify
Luminex Exhibit 1021
Page 120

DETAILED ACTION

The present application, filed on or after March 16, 2013, is being examined under the first inventor to file provisions of the AIA.

Examiner's Comment

This Office Action is in response to the Applicant's Amendment filed on 06/23/2018. In virtue of the amendment:

Claims 1-20 are present in the instant application.

The terminal disclaimer filed on 06/23/2018 disclaiming the terminal portion of any patent granted on this application has been reviewed and is accepted. The terminal disclaimer has been recorded.

Examiner's Statement of Reasons for Allowance

Claims **1-20** are allowed.

The primary reasons for the allowance of the claims are in the inclusion of the limitation(s):

"*... wherein in the first operating configuration, the first light source is active, the second light source is inactive, and the luminaire is configured to emit light of the first color temperature, wherein in the second operating configuration, the first light source is inactive, the second light source is active, and the luminaire is configured to emit light of the second color temperature, and wherein in the third operating configuration, the first light source is active, the second light source is active, and the luminaire is configured to emit light of a third color temperature that is between the first color temperature and the second color temperature*"

and combination thereof, in the claim(s), i.e., claim 16, (claims 17-20 are allowed as being dependent on claim 16), which are not found in the prior art references.

The reasons for the allowance of claims 1-15 have been indicated in previous Office Action mailed on 04/09/2018.

The prior art made of record and relied upon is considered pertinent to applicant's disclosure. The best consider with this application can be filed in Roberts (U.S. Patent 7,926,300 B2).

Any comments considered necessary by applicant must be submitted no later than the payment of the issue fee and, to avoid processing delays, should preferably accompany the issue fee. Such submissions should be clearly labeled "Comments on Statement of Reasons for Allowance."

Inquiry

Any inquiry concerning this communication or earlier communications from the examiner should be directed to Jimmy T Vu whose telephone number is (571) 272-1832. The examiner can normally be reached on M - F: 9 - 6:00.

If attempts to reach the examiner by telephone are unsuccessful, the examiner's supervisor, Douglas Owens can be reached on (571) 272-1662. The fax phone numbers for the organization where this application or proceeding is assigned are (571) 273-8300.

Any inquiry of a general nature or relating to the status of this application or proceeding should be directed to the receptionist whose telephone number is (571) 272-2800.

/JIMMY VU/
Primary Examiner, Art Unit 2844

Notice of References Cited	Application/Control No. 15/811,062	Applicant(s)/Patent Under Reexamination PYSHOS ET AL.	
	Examiner JIMMY VU	Art Unit 2844	Page 1 of 1

U.S. PATENT DOCUMENTS

*		Document Number Country Code-Number-Kind Code	Date MM-YYYY	Name	CPC Classification	US Classification
*	A	US-7,926,300 B2	04-2011	Roberts; John K.	G09G3/3413	362/227
	B	US-				
	C	US-				
	D	US-				
	E	US-				
	F	US-				
	G	US-				
	H	US-				
	I	US-				
	J	US-				
	K	US-				
	L	US-				
	M	US-				

FOREIGN PATENT DOCUMENTS

*		Document Number Country Code-Number-Kind Code	Date MM-YYYY	Country	Name	CPC Classification
	N					
	O					
	P					
	Q					
	R					
	S					
	T					

NON-PATENT DOCUMENTS

*		Include as applicable: Author, Title Date, Publisher, Edition or Volume, Pertinent Pages)
	U	
	V	
	W	
	X	

*A copy of this reference is not being furnished with this Office action. (See MPEP § 707.05(a).)
Dates in MM-YYYY format are publication dates. Classifications may be US or foreign.

PTO/SB/08A (08-03)
Approved for use through 07/31/2006. OMB 0651-0031
U.S. Patent and Trademark Office: U.S. DEPARTMENT OF COMMERCE
Under the Paperwork Reduction Act of 1995, no persons are required to respond to a collection of information unless it contains a valid OMB control number.

Substitute for form 1449A/PTO

INFORMATION DISCLOSURE STATEMENT BY APPLICANT

(use as many sheets as necessary)

Sheet	1	of	1

Complete if Known	
Application Number	**15/811,062**
Filing Date	**11-13-2017**
First Named Inventor	**Steven Walter Pyshos**
Group Art Unit	**2844**
Examiner Name	**Jimmy T. Vu**
Attorney Docket Number	**13682.227107**

U.S. PATENT DOCUMENTS

Examiner Initials *	Cite No. [1]	U.S. Patent Document Number	Kind Code [2] (if known)	Name of Patentee or Applicant of Cited Document	Date of Publication of Cited Document MM-DD- YYYY	Pages, Columns, Lines, Where Relevant Passages or Relevant Figures Appear
	1	8941312		McRae	01-27-2015	
	2	9892693		Kumar	02-13-2018	

FOREIGN PATENT DOCUMENTS

Examiner Initials *	Cite No. [1]	Foreign Patent Document Office[3]	Number	Kind Code[2] (if known)	Name of Patentee or Applicant of Cited Document	Date of Publication of Cited Document MM-DD- YYYY	Pages, Columns, Lines, Where Relevant Passages or Relevant Figures Appear	T [6]

OTHER PRIOR ART – NON PATENT LITERATURE DOCUMENTS

Examiner Initials *	Cite No. [1]	Include name of the author (in CAPITAL LETTERS), title of the article (when appropriate), title of the item (book, magazine, journal, serial, symposium, catalog, etc.), date, page(s), volume-issue number(s), publisher, city and/or country where published.	T [6]
	3	Test Report of California Appliance Efficiency Compliance for Permanently Installed High Efficacy LEDs under Title 24, issued November 18, 2015	
	4	Energy Star, Certificate of Compliance; Certificate No. 1129756, issued 11/25/2015	
	5	Test Report of IES LM-79-08; Approved Method: Electrical and Photometric Measurements of Solid-State Lighting Products; issued November 18, 2015	

Examiner Signature	/JIMMY T VU/	Date Considered	09/29/2018

*EXAMINER: Initial if reference considered, whether or not citation is in conformance with MPEP 609. Draw line through citation if not in conformance and not considered. Include copy of this form with next communication to applicant.

[1] Unique citation designation number. [2] See attached Kinds of U.S. Patent Documents. [3] Enter Office that issued the document, by the two-letter code (WIPO Standard ST.3). [4] For Japanese patent documents, the indication of the year of the reign of the Emperor must precede the serial number of the patent document. [5] Kind of document by the appropriate symbols as indicated on the document under WIPO Standard ST. 16 if possible. [6] Applicant is to place a check mark here if English language Translation is attached.

Burden Hour Statement: This form is estimated to take 2.0 hours to complete. Time will vary depending upon the needs of the individual case. Any comments on the amount of time you are required to complete this form should be sent to the Chief Information Officer, U. S. Patent and Trademark Office, Washington, DC 20231. DO NOT SEND FEES OR COMPLETED FORMS TO THIS ADDRESS. SEND TO: Assistant Commissioner for Patents, Washington, DC 20231.
DMSLIBRARY01\32087377.v1

ALL REFERENCES CONSIDERED EXCEPT WHERE LINED THROUGH. /J.T.V/

Index of Claims	Application/Control No.	Applicant(s)/Patent Under Reexamination
	15811062	PYSHOS ET AL.
	Examiner	**Art Unit**
	JIMMY VU	2844

✓	Rejected	-	Cancelled	N	Non-Elected	A	Appeal
=	Allowed	÷	Restricted	I	Interference	O	Objected

☒ Claims renumbered in the same order as presented by applicant ☐ CPA ☐ T.D. ☐ R.1.47

CLAIM		DATE								
Final	Original	10/01/2018								
	1	=								
	2	=								
	3	=								
	4	=								
	5	=								
	6	=								
	7	=								
	8	=								
	9	=								
	10	=								
	11	=								
	12	=								
	13	=								
	14	=								
	15	=								
	16	=								
	17	=								
	18	=								
	19	=								
	20	=								

Issue Classification	Application/Control No.	Applicant(s)/Patent Under Reexamination
	15811062	PYSHOS ET AL.
	Examiner	**Art Unit**
	JIMMY VU	2844

CPC						
Symbol					**Type**	**Version**
H05B		33	/	0863	F	2013-01-01
F21K		9	/	62	I	2016-08-01
F21S		8	/	026	I	2013-01-01
F21V		3	/	02	I	2013-01-01
F21V		5	/	04	I	2013-01-01
F21Y		2115	/	10	A	2016-08-01
F21V		17	/	12	I	2013-01-01
F21V		21	/	088	I	2013-01-01
F21V		23	/	001	I	2013-01-01
H05B		33	/	0845	I	2013-01-01
F21Y		2113	/	13	A	2016-08-01
F21V		7	/	00	I	2013-01-01
F21V		21	/	049	A	2013-01-01
			/			
			/			

CPC Combination Sets							
Symbol				**Type**	**Set**	**Ranking**	**Version**
			/				
			/				

NONE (Assistant Examiner) (Date)		**Total Claims Allowed:** 20	
/JIMMY VU/ Primary Examiner.Art Unit 2844 (Primary Examiner)	10/01/18 (Date)	O.G. Print Claim(s) 1	O.G. Print Figure 2

U.S. Patent and Trademark Office Part of Paper No. 20181001

Issue Classification	Application/Control No.	Applicant(s)/Patent Under Reexamination
	15811062	PYSHOS ET AL.
	Examiner	**Art Unit**
	JIMMY VU	2844

US ORIGINAL CLASSIFICATION		INTERNATIONAL CLASSIFICATION	
CLASS	SUBCLASS	CLAIMED	NON-CLAIMED
315	294	H 0 5 B 33 / 08 (2006.01.01)	

CROSS REFERENCE(S)					
CLASS	SUBCLASS (ONE SUBCLASS PER BLOCK)				

NONE (Assistant Examiner) (Date)	Total Claims Allowed: 20	
/JIMMY VU/ Primary Examiner.Art Unit 2844 10/01/18 (Primary Examiner) (Date)	O.G. Print Claim(s) 1	O.G. Print Figure 2

U.S. Patent and Trademark Office Part of Paper No. 20181001

Issue Classification	Application/Control No.	Applicant(s)/Patent Under Reexamination
	15811062	PYSHOS ET AL.
	Examiner	**Art Unit**
	JIMMY VU	2844

☒ **Claims renumbered in the same order as presented by applicant** ☐ **CPA** ☐ **T.D.** ☐ **R.1.47**

Final	Original	Final	Original	Final	Original	Final	Original	Final	Original	Final	Original	Final	Original	Final	Original
	1		17												
	2		18												
	3		19												
	4		20												
	5														
	6														
	7														
	8														
	9														
	10														
	11														
	12														
	13														
	14														
	15														
	16														

NONE (Assistant Examiner) (Date)		**Total Claims Allowed:** 20	
/JIMMY VU/ Primary Examiner.Art Unit 2844 (Primary Examiner)	10/01/18 (Date)	O.G. Print Claim(s) 1	O.G. Print Figure 2

U.S. Patent and Trademark Office Part of Paper No. 20181001

Search Notes	Application/Control No.	Applicant(s)/Patent Under Reexamination
	15811062	PYSHOS ET AL.
	Examiner	**Art Unit**
	JIMMY VU	2844

CPC- SEARCHED		
Symbol	**Date**	**Examiner**
H05B37/02|H05B33/08|H05B33/0845|H05B33/0863|F21K9/62|F21S8/026|F21V3/02|F21V5/04|F21V7/00|F21V17/12|F21V21/088|F21V23/001|F21Y2113/13|F21Y2115/10	4/2/18	JV

CPC COMBINATION SETS - SEARCHED		
Symbol	**Date**	**Examiner**

US CLASSIFICATION SEARCHED			
Class	**Subclass**	**Date**	**Examiner**
315	151,185R,209R,291,294,307,308,312	3/31/18	JV

* See search history printout included with this form or the SEARCH NOTES box below to determine the scope of the search.

SEARCH NOTES		
Search Notes	**Date**	**Examiner**
Class/subclass, CPC, Text, Assignment data, Inventor name, &Back/Forward search (EAST)	3/31/18	JV
considered IDS	3/31/18	JV
updated search	4/2/18	JV
updated search	10/1/18	JV

INTERFERENCE SEARCH			
US Class/ CPC Symbol	**US Subclass / CPC Group**	**Date**	**Examiner**
315	294	10/1/18	JV

INTERFERENCE SEARCH			
US Class/ CPC Symbol	**US Subclass / CPC Group**	**Date**	**Examiner**
USPAT, US-PGPUB	see interference search	10/1/18	JV

Luminex v. Signify
Luminex Exhibit 1021
Page 130

UNITED STATES PATENT AND TRADEMARK OFFICE

UNITED STATES DEPARTMENT OF COMMERCE
United States Patent and Trademark Office
Address: COMMISSIONER FOR PATENTS
P.O. Box 1450
Alexandria, Virginia 22313-1450
www.uspto.gov

BIB DATA SHEET

CONFIRMATION NO. 1254

SERIAL NUMBER	FILING or 371(c) DATE	CLASS	GROUP ART UNIT	ATTORNEY DOCKET NO.
15/811,062	11/13/2017 RULE	315	2844	13682.227107

APPLICANTS
Cooper Technologies Company, Houston, TX;

INVENTORS
Steven Walter Pyshos, Peachtree City, GA;
Raymond Janik, Fayetteville, GA;
Kevin Roy Harpenau, Atlanta, GA;

**** CONTINUING DATA ****************************
This application is a CON of 15/435,141 02/16/2017 PAT 9820350
which claims benefit of 62/297,424 02/19/2016

**** FOREIGN APPLICATIONS ****************************

**** IF REQUIRED, FOREIGN FILING LICENSE GRANTED ****
11/28/2017

Foreign Priority claimed	☐ Yes ☑ No		STATE OR COUNTRY	SHEETS DRAWINGS	TOTAL CLAIMS	INDEPENDENT CLAIMS
35 USC 119(a-d) conditions met	☐ Yes ☑ No	☐ Met after Allowance				
Verified and Acknowledged	/JIMMY T VU/ Examiner's Signature	/JV/ Initials	GA	10	20	3

ADDRESS

King & Spalding LLP (Eaton/Cooper)
ATTN: IP Docketing Department
1100 Louisiana Street, Suite 4000
Houston, TX 77002-5213
UNITED STATES

TITLE

Configurable Lighting System

FILING FEE RECEIVED		
1740	FEES: Authority has been given in Paper No._____ to charge/credit DEPOSIT ACCOUNT No._____ for following:	☐ All Fees ☐ 1.16 Fees (Filing) ☐ 1.17 Fees (Processing Ext. of time) ☐ 1.18 Fees (Issue) ☐ Other _____ ☐ Credit

EAST Search History

EAST Search History (Prior Art)

Ref #	Hits	Search Query	DBs	Default Operator	Plurals	Time Stamp
S85	4325	(light$3|lamp$1|LED$1|luminaire) and (control$4 with light$3 with state$1 with (switch$3|tun$4) with input$4)	US-PGPUB; USPAT; USOCR; FPRS; EPO; JPO; DERWENT; IBM_TDB	OR	ON	2018/10/01 03:41
S86	251	S85 and ((color|colour) with temperature)	US-PGPUB; USPAT; USOCR; FPRS; EPO; JPO; DERWENT; IBM_TDB	OR	ON	2018/10/01 03:41
S87	31	S86 and 315/151,185R,209R,291,294,307,308,312.ccls.	US-PGPUB; USPAT; USOCR; FPRS; EPO; JPO; DERWENT; IBM_TDB	OR	ON	2018/10/01 03:41
S88	5	("9820350").PN.	US-PGPUB; USPAT; USOCR; FPRS; EPO; JPO; DERWENT; IBM_TDB	OR	ON	2018/10/01 03:46
S89	8	("20060220586" | "20140210357" | "20150054410" | "20170019973" | "20170086265" | "7416312" | "8172415" | "8317362").PN.	US-PGPUB; USPAT; USOCR	OR	OFF	2018/10/01 03:47
S90	14	("4677533" | "5224733" | "5577832" | "5899557" | "6048083" | "6905228").PN. OR ("7416312").URPN.	US-PGPUB; USPAT; USOCR	OR	OFF	2018/10/01 03:47
S91	4762	(light$3|lamp$1|LED$1|luminaire) and (input$4 with (set|setting|settable) with (state$1|channel$1) with control$4 with power)	US-PGPUB; USPAT; USOCR; FPRS; EPO; JPO; DERWENT; IBM_TDB	OR	ON	2018/10/01 03:48
S92	477	S91 and ((color|colour) with temperature)	US-PGPUB; USPAT; USOCR; FPRS; EPO; JPO; DERWENT; IBM_TDB	OR	ON	2018/10/01 03:48
S93	10	S92 and 315/151,185R,209R,291,294,307,308,312.ccls.	US-PGPUB; USPAT; USOCR; FPRS; EPO; JPO; DERWENT; IBM_TDB	OR	ON	2018/10/01 03:48
S94	17	(7426312|8317362|20140210357|20060220586|20170086265|20170019973).pn.	US-PGPUB; USPAT; USOCR; FPRS; EPO; JPO; DERWENT; IBM_TDB	OR	ON	2018/10/01 03:48
S95	163623	(H05B37/02|H05B33/08|H05B33/0845|H05B33/0863|F21K9/62|F21S8/026|F21V3/02|F21V5/04|F21V7/00|F21V17/12|F21V21/088|F21V23/001|F21Y2113/13|F21Y2115/10).cpc.	US-PGPUB;	OR	ON	2018/10/01

			USPAT; USOCR; FPRS; EPO; JPO; DERWENT; IBM_TDB			03:49
S96	327	S95 and (light$3|lamp$1|LED$1|luminaire) and (control$4 with light$3 with state$1 with (switch$3|tun$4) with input$4)	US-PGPUB; USPAT; USOCR; FPRS; EPO; JPO; DERWENT; IBM_TDB	OR	ON	2018/10/01 03:49
S97	91	S96 and ((color|colour) with temperature)	US-PGPUB; USPAT; USOCR; FPRS; EPO; JPO; DERWENT; IBM_TDB	OR	ON	2018/10/01 03:49
S98	1	S97 and (hous$3 with switch$3 with pin$1)	US-PGPUB; USPAT; USOCR; FPRS; EPO; JPO; DERWENT; IBM_TDB	OR	ON	2018/10/01 03:49
S99	35	(("PYSHOS") near3 ("Steven")).IN.	US-PGPUB; USPAT; USOCR	OR	OFF	2018/10/01 03:51
S100	8	S99 and ((color|colour) with temperature)	US-PGPUB; USPAT; USOCR; FPRS; EPO; JPO; DERWENT; IBM_TDB	OR	ON	2018/10/01 03:52
S101	31	(("JANIK") near3 ("Raymond")).IN.	US-PGPUB; USPAT; USOCR	OR	ON	2018/10/01 03:52
S102	17	S101 and ((color|colour) with temperature)	US-PGPUB; USPAT; USOCR; FPRS; EPO; JPO; DERWENT; IBM_TDB	OR	ON	2018/10/01 03:52
S103	3	S102 and (light$3|lamp$1|LED$1|luminaire) and (control$4 with light$3 with state$1 with (switch$3|tun$4))	US-PGPUB; USPAT; USOCR; FPRS; EPO; JPO; DERWENT; IBM_TDB	OR	ON	2018/10/01 03:53
S104	38	(("HARPENAU") near3 ("Kevin")).IN.	US-PGPUB; USPAT; USOCR	OR	ON	2018/10/01 03:54
S105	3	S104 and (light$3|lamp$1|LED$1|luminaire) and (control$4 with light$3 with state$1 with (switch$3|tun$4))	US-PGPUB; USPAT; USOCR; FPRS; EPO; JPO; DERWENT; IBM_TDB	OR	ON	2018/10/01 03:54

EAST Search History (Interference)

Ref #	Hits	Search Query	DBs	Default Operator	Plurals	Time Stamp
S106	189	((light$3|lamp$1|LED$1|luminaire) and (input$4 with (set|setting|settable) with (state$1|channel$1) with control$4 with power)).clm.	US-PGPUB; USPAT	OR	ON	2018/10/01 04:34
S107	0	((light$3|lamp$1|LED$1|luminaire) and (input$4 with (set|setting|settable) with (state$1|channel$1) with control$4 with power) and ((color|colour) with temperature)).clm.	US-PGPUB; USPAT	OR	ON	2018/10/01 04:35

10/ 1/ 2018 4:36:07 AM
C:\ Users\ jvu\ Documents\ EAST\ Workspaces\ 5811062.wsp

PTO/SB/08A (08-03)
Approved for use through 07/31/2006. OMB 0651-0031
U.S. Patent and Trademark Office: U.S. DEPARTMENT OF COMMERCE
Under the Paperwork Reduction Act of 1995, no persons are required to respond to a collection of information unless it contains a valid OMB control number.

Substitute for form 1449A/PTO

INFORMATION DISCLOSURE STATEMENT BY APPLICANT

(use as many sheets as necessary)

Sheet	1	of	1

Complete if Known	
Application Number	**15/811,062**
Filing Date	**11-13-2017**
First Named Inventor	**Steven Walter Pyshos**
Group Art Unit	**2844**
Examiner Name	**Jimmy T. Vu**
Attorney Docket Number	**13682.227107**

U.S. PATENT DOCUMENTS

Examiner Initials *	Cite No. [1]	U.S. Patent Document Number	Kind Code [2] (if known)	Name of Patentee or Applicant of Cited Document	Date of Publication of Cited Document MM-DD- YYYY	Pages, Columns, Lines, Where Relevant Passages or Relevant Figures Appear
	1	7416312		McDermott	08-26-2008	
	2	8872438		Zhou	10-28-2014	
	3	2013/0328503		Toda	12-12-2013	

FOREIGN PATENT DOCUMENTS

Examiner Initials *	Cite No. [1]	Foreign Patent Document Office [3]	Number	Kind Code [2] (if known)	Name of Patentee or Applicant of Cited Document	Date of Publication of Cited Document MM-DD- YYYY	Pages, Columns, Lines, Where Relevant Passages or Relevant Figures Appear	T [6]

OTHER PRIOR ART – NON PATENT LITERATURE DOCUMENTS

Examiner Initials *	Cite No. [1]	Include name of the author (in CAPITAL LETTERS), title of the article (when appropriate), title of the item (book, magazine, journal, serial, symposium, catalog, etc.), date, page(s), volume-issue number(s), publisher, city and/or country where published.	T [6]

Examiner Signature		Date Considered	

*EXAMINER: Initial if reference considered, whether or not citation is in conformance with MPEP 609. Draw line through citation if not in conformance and not considered. Include copy of this form with next communication to applicant.

[1] Unique citation designation number. [2] See attached Kinds of U.S. Patent Documents. [3] Enter Office that issued the document, by the two-letter code (WIPO Standard ST.3). [4] For Japanese patent documents, the indication of the year of the reign of the Emperor must precede the serial number of the patent document. [5] Kind of document by the appropriate symbols as indicated on the document under WIPO Standard ST. 16 if possible. [6] Applicant is to place a check mark here if English language Translation is attached.

Burden Hour Statement: This form is estimated to take 2.0 hours to complete. Time will vary depending upon the needs of the individual case. Any comments on the amount of time you are required to complete this form should be sent to the Chief Information Officer, U. S. Patent and Trademark Office, Washington, DC 20231. DO NOT SEND FEES OR COMPLETED FORMS TO THIS ADDRESS. SEND TO: Assistant Commissioner for Patents, Washington, DC 20231.
DMSLIBRARY01\32087377.v2

Electronic Patent Application Fee Transmittal	
Application Number:	15811062
Filing Date:	13-Nov-2017
Title of Invention:	Configurable Lighting System
First Named Inventor/Applicant Name:	Steven Walter Pyshos
Filer:	Robert Timothy Neufeld
Attorney Docket Number:	13682.227107

Filed as Large Entity

Filing Fees for Utility under 35 USC 111(a)

Description	Fee Code	Quantity	Amount	Sub-Total in USD($)
Basic Filing:				
Pages:				
Claims:				
Miscellaneous-Filing:				
Petition:				
Patent-Appeals-and-Interference:				
Post-Allowance-and-Post-Issuance:				
Extension-of-Time:				

Description	Fee Code	Quantity	Amount	Sub-Total in USD($)
Miscellaneous:				
SUBMISSION- INFORMATION DISCLOSURE STMT	1806	1	240	240
		Total in USD ($)		**240**

Electronic Acknowledgement Receipt	
EFS ID:	34061184
Application Number:	15811062
International Application Number:	
Confirmation Number:	1254
Title of Invention:	Configurable Lighting System
First Named Inventor/Applicant Name:	Steven Walter Pyshos
Customer Number:	91764
Filer:	Robert Timothy Neufeld
Filer Authorized By:	
Attorney Docket Number:	13682.227107
Receipt Date:	22-OCT-2018
Filing Date:	13-NOV-2017
Time Stamp:	17:28:31
Application Type:	Utility under 35 USC 111(a)

Payment information:

Submitted with Payment	yes
Payment Type	CARD
Payment was successfully received in RAM	$240
RAM confirmation Number	102318INTEFSW17285500
Deposit Account	
Authorized User	
The Director of the USPTO is hereby authorized to charge indicated fees and credit any overpayment as follows:	

File Listing:

Document Number	Document Description	File Name	File Size(Bytes)/ Message Digest	Multi Part /.zip	Pages (if appl.)
1	Transmittal Letter	227107long.pdf	88648 fc83466c2bb6dbf05d5b3d14869ef1e8bf64cd70	no	3
Warnings:					
Information:					
2	Information Disclosure Statement (IDS) Form (SB08)	227107ids.pdf	125102 d69f472a76c2c6cdb6f349e90f14dbea837fabce	no	1
Warnings:					
Information:					
This is not an USPTO supplied IDS fillable form					
3	Fee Worksheet (SB06)	fee-info.pdf	30449 31c99d3486d9609282b18f15304f4d8e6c3ad6bd	no	2
Warnings:					
Information:					
		Total Files Size (in bytes):	244199		

This Acknowledgement Receipt evidences receipt on the noted date by the USPTO of the indicated documents, characterized by the applicant, and including page counts, where applicable. It serves as evidence of receipt similar to a Post Card, as described in MPEP 503.

New Applications Under 35 U.S.C. 111
If a new application is being filed and the application includes the necessary components for a filing date (see 37 CFR 1.53(b)-(d) and MPEP 506), a Filing Receipt (37 CFR 1.54) will be issued in due course and the date shown on this Acknowledgement Receipt will establish the filing date of the application.
National Stage of an International Application under 35 U.S.C. 371
If a timely submission to enter the national stage of an international application is compliant with the conditions of 35 U.S.C. 371 and other applicable requirements a Form PCT/DO/EO/903 indicating acceptance of the application as a national stage submission under 35 U.S.C. 371 will be issued in addition to the Filing Receipt, in due course.
New International Application Filed with the USPTO as a Receiving Office
If a new international application is being filed and the international application includes the necessary components for an international filing date (see PCT Article 11 and MPEP 1810), a Notification of the International Application Number and of the International Filing Date (Form PCT/RO/105) will be issued in due course, subject to prescriptions concerning national security, and the date shown on this Acknowledgement Receipt will establish the international filing date of the application.

IN THE UNITED STATES PATENT AND TRADEMARK OFFICE

In re Application of:	§	
Steven Walter Pyshos	§	Confirmation No.: **1254**
	§	
Application Serial No: **15/811,062**	§	Group Art Unit: **2844**
	§	
Filed: **11-13-2017**	§	Examiner: **Jimmy T. Vu**
	§	
For: **Configurable Lighting System**	§	Attorney Docket: **13682.227107**

INFORMATION DISCLOSURE STATEMENT

Commissioner for Patents
P.O. Box 1450
Alexandria, VA 22313-1450

Sir:

This Information Disclosure Statement is filed in accordance with 37 C.F.R. §§1.56, 1.97 and 1.98. The items listed on Form SB/08B are made of record to assist the Patent and Trademark Office in its examination of this application. The Examiner is respectfully requested to fully consider the items and to independently ascertain their teaching.

1. ☐ For each of the following items listed on the enclosed copy of Form SB/08B that is not in the English language, an English language translation of that item or a portion thereof or a concise explanation of the relevance of that item is enclosed:

2. ☐ For each of the following items listed on the enclosed copy of Form SB/08B that is not in the English language, a concise explanation of the relevance of that item is provided:

3. ☐ Any copy of the items listed on the enclosed copy of Form SB/08B that is not enclosed with this Information Disclosure Statement was previously cited by or submitted to the Patent and Trademark Office in application Serial No.

4. ☐ No fee is due under 37 C.F.R. §1.17(p) for this Information Disclosure Statement since it is being filed in compliance with:

   ☐ 37 C.F.R. §1.97(b)(1), within three months of the filing date of a national application other than a CPA; or

☐ 37 C.F.R. §1.97(b)(2), within three months of the date of entry into the national stage as set forth in §1.491 in an international application; or

☐ 37 C.F.R. §1.97(b)(3), before the mailing date of a first Office action on the merits; or

☐ 37 C.F.R. §1.97(b)(4) before the mailing date of a first office action after the filing of an RCE under §1.114

5. ☐ No fee is due under 37 C.F.R. §1.17(p) for this Supplemental Information Disclosure Statement since it is being filed in compliance with 37 C.F.R. §1.97(c), after the period specified in paragraph 4 above but before the mailing date of a final action or a Notice of Allowance (where there has been no prior final action), and is accompanied by one of the certifications pursuant to 37 C.F.R. §1.97(e) set forth in paragraph 9 below.

6. ☐ A fee is due under 37 C.F.R. §1.17(p) for this Supplemental Information Disclosure Statement since it is being filed in compliance with 37 C.F.R. §1.97(c), after the period specified in paragraph 4 above but before the mailing date of a final action or a notice of allowance (where there has been no prior final action):

☐ Payment of $240.00 is being made with a credit card via EFS-Web.

☐ Charge the fee to Deposit Account No.11-0980, Order No._____.

7. ☒ A fee is due under 37 C.F.R. §1.17(p) for this Supplemental Information Disclosure Statement since it is being filed in compliance with 37 C.F.R. §1.97(d), after the mailing date of a final action or a notice of allowance, whichever comes first, but before payment of the issue fee, and is accompanied by:

a. one of the certifications pursuant to 37 C.F.R. §1.97(e) set forth in paragraph 9 below; and

b. the fee due under 37 C.F.R. §1.17(p) which is paid as set forth in paragraph 11 below.

8. ☐ This Supplemental Information Disclosure Statement is being filed in compliance with:

a. ☐ 37 C.F.R. §1.313(b)(3) or §1.313(c)(1), after the issue fee has been paid and information cited in this Supplemental Information Disclosure Statement may render at least one claim unpatentable and is accompanied by the attached Petition To Withdraw Application From Issue and fee pursuant to 37 C.F.R. §1.17(h);

b. ☐ 37 C.F.R. §1.313(c)(2) or §1.313(c)(3), after the issue fee has been paid and information cited in this Supplemental Information Disclosure Statement is to be considered in a Request for Continued Examination (RCE) or a Continuation application upon abandonment of the instant application and is accompanied by the attached Petition To Withdraw Application From Issue and fee pursuant to 37 C.F.R. §1.17(h).

c. ☐ The fee due under 37 C.F.R. §§1.17(h) is paid as set forth in paragraph 11 below.

9. ☐ I hereby certify that each item of information contained in this Supplemental Information Disclosure Statement was first cited in a communication from a foreign patent office in a counterpart foreign application not more than three months prior to the filing of this Supplemental Information Disclosure Statement.

☒ I hereby certify that no item of information in the Supplemental Information Disclosure Statement filed herewith was cited in a communication from a foreign patent office in a counterpart foreign application or, to my knowledge after making reasonable inquiry, was known to any individual designated in §1.56(c) more than three months prior to the filing of this Supplemental Information Disclosure Statement.

10. ☐ This document is accompanied by ☐ a Search Report ☐ Communication which was cited in a corresponding ☐ PCT or ☐ Foreign counterpart application.

11. ☒ Charge any fees due under 37 C.F.R. §§1.17(h) and 1.17(p) to Deposit Account No.-110980.

☒ The Commissioner is hereby authorized to charge any additional fees which may be required for this Information Disclosure Statement, or credit any overpayment to Deposit Account No. 11-0980.

Respectfully submitted,
KING & SPALDING LLP

/Robert T. Neufeld/
Robert T. Neufeld
Reg. No. 48394

Correspondence Address:
King & Spalding LLP
1180 Peachtree Street
Atlanta, GA 30309
404-572-4600 Telephone
404-572-5100 Facsimile

UNITED STATES PATENT AND TRADEMARK OFFICE

UNITED STATES DEPARTMENT OF COMMERCE
United States Patent and Trademark Office
Address: COMMISSIONER FOR PATENTS
P.O. Box 1450
Alexandria, Virginia 22313-1450
www.uspto.gov

APPLICATION NO.	FILING DATE	FIRST NAMED INVENTOR	ATTORNEY DOCKET NO.	CONFIRMATION NO.
15/811,062	11/13/2017	Steven Walter Pyshos	13682.227107	1254

91764 7590 11/23/2018
King & Spalding LLP (Eaton/Cooper)
ATTN: IP Docketing Department
1100 Louisiana Street, Suite 4000
Houston, TX 77002-5213

EXAMINER
VU, JIMMY T

ART UNIT	PAPER NUMBER
2844	

NOTIFICATION DATE	DELIVERY MODE
11/23/2018	ELECTRONIC

Please find below and/or attached an Office communication concerning this application or proceeding.

The time period for reply, if any, is set in the attached communication.

Notice of the Office communication was sent electronically on above-indicated "Notification Date" to the following e-mail address(es):

houpatentdocket@kslaw.com
nduby@kslaw.com

PTOL-90A (Rev. 04/07)

UNITED STATES DEPARTMENT OF COMMERCE
U.S. Patent and Trademark Office
Address: COMMISSIONER FOR PATENTS
P.O. Box 1450
Alexandria, Virginia 22313-1450

APPLICATION NO./ CONTROL NO.	FILING DATE	FIRST NAMED INVENTOR/ PATENT IN REEXAMINATION	ATTORNEY DOCKET NO.
15/811,062	11/13/2017	Pyshos et al.	13682.227107

		EXAMINER	
King & Spalding LLP (Eaton/Cooper) ATTN: IP Docketing Department 1100 Louisiana Street, Suite 4000 Houston, TX 77002-5213		JIMMY T VU	
		ART UNIT	PAPER
		2844	20181117

DATE MAILED: _____

Please find below and/or attached an Office communication concerning this application or proceeding.

Commissioner for Patents

The references cited in the Information Disclosure Statement (IDS) filed on 10/22/2018 have been considered by the Examiner. /JV/

/JIMMY T VU/
Primary Examiner, Art Unit 2844

PTO-90C (Rev.04-03)

PTO/SB/08A (08-03)
Approved for use through 07/31/2006. OMB 0651-0031
U.S. Patent and Trademark Office: U.S. DEPARTMENT OF COMMERCE
Under the Paperwork Reduction Act of 1995, no persons are required to respond to a collection of information unless it contains a valid OMB control number.

Substitute for form 1449A/PTO

INFORMATION DISCLOSURE STATEMENT BY APPLICANT

(use as many sheets as necessary)

Sheet	1	of	1

Complete if Known	
Application Number	**15/811,062**
Filing Date	**11-13-2017**
First Named Inventor	**Steven Walter Pyshos**
Group Art Unit	**2844**
Examiner Name	**Jimmy T. Vu**
Attorney Docket Number	**13682.227107**

U.S. PATENT DOCUMENTS

Examiner Initials *	Cite No. [1]	U.S. Patent Document Number	Kind Code [2] (if known)	Name of Patentee or Applicant of Cited Document	Date of Publication of Cited Document MM-DD- YYYY	Pages, Columns, Lines, Where Relevant Passages or Relevant Figures Appear
	1	7416312		McDermott	08-26-2008	
	2	8872438		Zhou	10-28-2014	
	3	2013/0328503		Toda	12-12-2013	

FOREIGN PATENT DOCUMENTS

Examiner Initials *	Cite No. [1]	Foreign Patent Document Office [3]	Number	Kind Code [2] (if known)	Name of Patentee or Applicant of Cited Document	Date of Publication of Cited Document MM-DD- YYYY	Pages, Columns, Lines, Where Relevant Passages or Relevant Figures Appear	T [6]

OTHER PRIOR ART – NON PATENT LITERATURE DOCUMENTS

Examiner Initials *	Cite No. [1]	Include name of the author (in CAPITAL LETTERS), title of the article (when appropriate), title of the item (book, magazine, journal, serial, symposium, catalog, etc.), date, page(s), volume-issue number(s), publisher, city and/or country where published.	T [6]

Examiner Signature	/JIMMY T VU/	Date Considered	11/17/2018

*EXAMINER: Initial if reference considered, whether or not citation is in conformance with MPEP 609. Draw line through citation if not in conformance and not considered. Include copy of this form with next communication to applicant.

[1] Unique citation designation number. [2] See attached Kinds of U.S. Patent Documents. [3] Enter Office that issued the document, by the two-letter code (WIPO Standard ST.3). [4] For Japanese patent documents, the indication of the year of the reign of the Emperor must precede the serial number of the patent document. [5] Kind of document by the appropriate symbols as indicated on the document under WIPO Standard ST. 16 if possible. [6] Applicant is to place a check mark here if English language Translation is attached.

Burden Hour Statement: This form is estimated to take 2.0 hours to complete. Time will vary depending upon the needs of the individual case. Any comments on the amount of time you are required to complete this form should be sent to the Chief Information Officer, U. S. Patent and Trademark Office, Washington, DC 20231. DO NOT SEND FEES OR COMPLETED FORMS TO THIS ADDRESS. SEND TO: Assistant Commissioner for Patents, Washington, DC 20231.
DMSLIBRARY01\32087377.v2

ALL REFERENCES CONSIDERED EXCEPT WHERE LINED THROUGH. /J.T.V/

PTO/SB/08A (08-03)
Approved for use through 07/31/2006. OMB 0651-0031
U.S. Patent and Trademark Office: U.S. DEPARTMENT OF COMMERCE
Under the Paperwork Reduction Act of 1995 no persons are required to respond to a collection of information unless it contains a valid OMB control number.

Substitute for form 1449A/PTO

INFORMATION DISCLOSURE STATEMENT BY APPLICANT

(use as many sheets as necessary)

Sheet	1	of	1

Complete if Known	
Application Number	**15/811,062**
Filing Date	**11-13-2017**
First Named Inventor	**Steven Walter Pyshos**
Group Art Unit	**2844**
Examiner Name	**Jimmy T. Vu**
Attorney Docket Number	**13682.227107**

U.S. PATENT DOCUMENTS

Examiner Initials *	Cite No. [1]	U.S. Patent Document Number	Kind Code (if known)	Name of Patentee or Applicant of Cited Document	Date of Publication of Cited Document MM-DD- YYYY	Pages Columns Lines Where Relevant Passages or Relevant Figures Appear
	1.	10,091,855		Van Winkle	10-02-2018	

FOREIGN PATENT DOCUMENTS

Examiner Initials *	Cite No. [1]	Foreign Patent Document Office[3]	Number	Kind Code[2] (if known)	Name of Patentee or Applicant of Cited Document	Date of Publication of Cited Document MM-DD- YYYY	Pages Columns Lines Where Relevant Passages or Relevant Figures Appear	T [6]

OTHER PRIOR ART – NON PATENT LITERATURE DOCUMENTS

Examiner Initials *	Cite No. [1]	Include name of the author (in CAPITAL LETTERS) title of the article (when appropriate) title of the item (book magazine journal serial symposium catalog etc.) date page(s) volume-issue number(s) publisher city and/or country where published.	T [6]

Examiner Signature		Date Considered	

*EXAMINER: Initial if reference considered whether or not citation is in conformance with MPEP 609. Draw line through citation if not in conformance and not considered. Include copy of this form with next communication to applicant.

[1] Unique citation designation number. [2] See attached Kinds of U.S. Patent Documents. [3] Enter Office that issued the document by the two-letter code (WIPO Standard ST.3). [4] For Japanese patent documents the indication of the year of the reign of the Emperor must precede the serial number of the patent document. [5] Kind of document by the appropriate symbols as indicated on the document under WIPO Standard ST. 16 if possible. [6] Applicant is to place a check mark here if English language Translation is attached.

Burden Hour Statement: This form is estimated to take 2.0 hours to complete. Time will vary depending upon the needs of the individual case. Any comments on the amount of time you are required to complete this form should be sent to the Chief Information Officer U. S. Patent and Trademark Office Washington DC 20231. DO NOT SEND FEES OR COMPLETED FORMS TO THIS ADDRESS. SEND TO: Assistant Commissioner for Patents Washington DC 20231.
DMSLIBRARY01\33475041.v1

Electronic Patent Application Fee Transmittal	
Application Number:	15811062
Filing Date:	13-Nov-2017
Title of Invention:	Configurable Lighting System
First Named Inventor/Applicant Name:	Steven Walter Pyshos
Filer:	Robert Timothy Neufeld
Attorney Docket Number:	13682.227107

Filed as Large Entity

Filing Fees for Utility under 35 USC 111(a)

Description	Fee Code	Quantity	Amount	Sub-Total in USD($)
Basic Filing:				
Pages:				
Claims:				
Miscellaneous-Filing:				
Petition:				
Patent-Appeals-and-Interference:				
Post-Allowance-and-Post-Issuance:				
Extension-of-Time:				

Description	Fee Code	Quantity	Amount	Sub-Total in USD($)
Miscellaneous:				
SUBMISSION- INFORMATION DISCLOSURE STMT	1806	1	240	240
		Total in USD ($)		**240**

Electronic Acknowledgement Receipt	
EFS ID:	34480699
Application Number:	15811062
International Application Number:	
Confirmation Number:	1254
Title of Invention:	Configurable Lighting System
First Named Inventor/Applicant Name:	Steven Walter Pyshos
Customer Number:	91764
Filer:	Robert Timothy Neufeld
Filer Authorized By:	
Attorney Docket Number:	13682.227107
Receipt Date:	04-DEC-2018
Filing Date:	13-NOV-2017
Time Stamp:	20:50:41
Application Type:	Utility under 35 USC 111(a)

Payment information:

Submitted with Payment	yes
Payment Type	CARD
Payment was successfully received in RAM	$240
RAM confirmation Number	120618INTEFSW20513500
Deposit Account	
Authorized User	
The Director of the USPTO is hereby authorized to charge indicated fees and credit any overpayment as follows:	

File Listing:

Document Number	Document Description	File Name	File Size(Bytes)/ Message Digest	Multi Part /.zip	Pages (if appl.)
1	Transmittal Letter	227107trans.pdf	88641 b7f239f280162d8c17bf39120716ef8c290bffde	no	3
Warnings:					
Information:					
2	Information Disclosure Statement (IDS) Form (SB08)	227107ids.pdf	125046 05aac0e7dcf498cdcc33474cbb4c800df001ce38	no	1
Warnings:					
Information:					
This is not an USPTO supplied IDS fillable form					
3	Fee Worksheet (SB06)	fee-info.pdf	30448 0190e129d83f75861a476c49e02aea6473a48742	no	2
Warnings:					
Information:					
		Total Files Size (in bytes):	244135		

This Acknowledgement Receipt evidences receipt on the noted date by the USPTO of the indicated documents, characterized by the applicant, and including page counts, where applicable. It serves as evidence of receipt similar to a Post Card, as described in MPEP 503.

New Applications Under 35 U.S.C. 111
If a new application is being filed and the application includes the necessary components for a filing date (see 37 CFR 1.53(b)-(d) and MPEP 506), a Filing Receipt (37 CFR 1.54) will be issued in due course and the date shown on this Acknowledgement Receipt will establish the filing date of the application.
National Stage of an International Application under 35 U.S.C. 371
If a timely submission to enter the national stage of an international application is compliant with the conditions of 35 U.S.C. 371 and other applicable requirements a Form PCT/DO/EO/903 indicating acceptance of the application as a national stage submission under 35 U.S.C. 371 will be issued in addition to the Filing Receipt, in due course.
New International Application Filed with the USPTO as a Receiving Office
If a new international application is being filed and the international application includes the necessary components for an international filing date (see PCT Article 11 and MPEP 1810), a Notification of the International Application Number and of the International Filing Date (Form PCT/RO/105) will be issued in due course, subject to prescriptions concerning national security, and the date shown on this Acknowledgement Receipt will establish the international filing date of the application.

IN THE UNITED STATES PATENT AND TRADEMARK OFFICE

In re Application of:	§	
Steven Walter Pyshos	§	Confirmation No.: **1254**
	§	
Application Serial No: **15/811,062**	§	Group Art Unit: **2844**
	§	
Filed: **11-13-2017**	§	Examiner: **Jimmy T. Vu**
	§	
For: **Configurable Lighting System**	§	Attorney Docket: **13682.227107**

INFORMATION DISCLOSURE STATEMENT

Commissioner for Patents
P.O. Box 1450
Alexandria, VA 22313-1450

Sir:

This Information Disclosure Statement is filed in accordance with 37 C.F.R. §§1.56, 1.97 and 1.98. The items listed on Form SB/08B are made of record to assist the Patent and Trademark Office in its examination of this application. The Examiner is respectfully requested to fully consider the items and to independently ascertain their teaching.

1. ☐ For each of the following items listed on the enclosed copy of Form SB/08B that is not in the English language, an English language translation of that item or a portion thereof or a concise explanation of the relevance of that item is enclosed:

2. ☐ For each of the following items listed on the enclosed copy of Form SB/08B that is not in the English language, a concise explanation of the relevance of that item is provided:

3. ☐ Any copy of the items listed on the enclosed copy of Form SB/08B that is not enclosed with this Information Disclosure Statement was previously cited by or submitted to the Patent and Trademark Office in application Serial No.

4. ☐ No fee is due under 37 C.F.R. §1.17(p) for this Information Disclosure Statement since it is being filed in compliance with:

   ☐ 37 C.F.R. §1.97(b)(1), within three months of the filing date of a national application other than a CPA; or

☐ 37 C.F.R. §1.97(b)(2), within three months of the date of entry into the national stage as set forth in §1.491 in an international application; or

☐ 37 C.F.R. §1.97(b)(3), before the mailing date of a first Office action on the merits; or

☐ 37 C.F.R. §1.97(b)(4) before the mailing date of a first office action after the filing of an RCE under §1.114

5. ☐ No fee is due under 37 C.F.R. §1.17(p) for this Supplemental Information Disclosure Statement since it is being filed in compliance with 37 C.F.R. §1.97(c), after the period specified in paragraph 4 above but before the mailing date of a final action or a Notice of Allowance (where there has been no prior final action), and is accompanied by one of the certifications pursuant to 37 C.F.R. §1.97(e) set forth in paragraph 9 below.

6. ☐ A fee is due under 37 C.F.R. §1.17(p) for this Supplemental Information Disclosure Statement since it is being filed in compliance with 37 C.F.R. §1.97(c), after the period specified in paragraph 4 above but before the mailing date of a final action or a notice of allowance (where there has been no prior final action):

☐ Payment of $240.00 is being made with a credit card via EFS-Web.

☐ Charge the fee to Deposit Account No.11-0980, Order No._____.

7. ☒ A fee is due under 37 C.F.R. §1.17(p) for this Supplemental Information Disclosure Statement since it is being filed in compliance with 37 C.F.R. §1.97(d), after the mailing date of a final action or a notice of allowance, whichever comes first, but before payment of the issue fee, and is accompanied by:

a. one of the certifications pursuant to 37 C.F.R. §1.97(e) set forth in paragraph 9 below; and

b. the fee due under 37 C.F.R. §1.17(p) which is paid as set forth in paragraph 11 below.

8. ☐ This Supplemental Information Disclosure Statement is being filed in compliance with:

a. ☐ 37 C.F.R. §1.313(b)(3) or §1.313(c)(1), after the issue fee has been paid and information cited in this Supplemental Information Disclosure Statement may render at least one claim unpatentable and is accompanied by the attached Petition To Withdraw Application From Issue and fee pursuant to 37 C.F.R. §1.17(h);

b. ☐ 37 C.F.R. §1.313(c)(2) or §1.313(c)(3), after the issue fee has been paid and information cited in this Supplemental Information Disclosure Statement is to be considered in a Request for Continued Examination (RCE) or a Continuation application upon abandonment of the instant application and is accompanied by the attached Petition To Withdraw Application From Issue and fee pursuant to 37 C.F.R. §1.17(h).

c. ☐ The fee due under 37 C.F.R. §§1.17(h) is paid as set forth in paragraph 11 below.

9. ☐ I hereby certify that each item of information contained in this Supplemental Information Disclosure Statement was first cited in a communication from a foreign patent office in a counterpart foreign application not more than three months prior to the filing of this Supplemental Information Disclosure Statement.

☒ I hereby certify that no item of information in the Supplemental Information Disclosure Statement filed herewith was cited in a communication from a foreign patent office in a counterpart foreign application or, to my knowledge after making reasonable inquiry, was known to any individual designated in §1.56(c) more than three months prior to the filing of this Supplemental Information Disclosure Statement.

10. ☐ This document is accompanied by ☐ a Search Report ☐ Communication which was cited in a corresponding ☐ PCT or ☐ Foreign counterpart application.

11. ☒ Charge any fees due under 37 C.F.R. §§1.17(h) and 1.17(p) to Deposit Account No.-110980.

☒ The Commissioner is hereby authorized to charge any additional fees which may be required for this Information Disclosure Statement, or credit any overpayment to Deposit Account No. 11-0980.

Respectfully submitted,
KING & SPALDING LLP

/Robert T. Neufeld/
Robert T. Neufeld
Reg. No. 48394

Correspondence Address:
King & Spalding LLP
1180 Peachtree Street
Atlanta, GA 30309
404-572-4600 Telephone
404-572-5100 Facsimile

UNITED STATES PATENT AND TRADEMARK OFFICE

UNITED STATES DEPARTMENT OF COMMERCE
United States Patent and Trademark Office
Address: COMMISSIONER FOR PATENTS
P.O. Box 1450
Alexandria, Virginia 22313-1450
www.uspto.gov

APPLICATION NO.	FILING DATE	FIRST NAMED INVENTOR	ATTORNEY DOCKET NO.	CONFIRMATION NO.
15/811,062	11/13/2017	Steven Walter Pyshos	13682.227107	1254

91764 7590 01/03/2019
King & Spalding LLP (Eaton/Cooper)
ATTN: IP Docketing Department
1100 Louisiana Street, Suite 4000
Houston, TX 77002-5213

EXAMINER
VU, JIMMY T

ART UNIT	PAPER NUMBER
2844	

NOTIFICATION DATE	DELIVERY MODE
01/03/2019	ELECTRONIC

Please find below and/or attached an Office communication concerning this application or proceeding.

The time period for reply, if any, is set in the attached communication.

Notice of the Office communication was sent electronically on above-indicated "Notification Date" to the following e-mail address(es):

houpatentdocket@kslaw.com
nduby@kslaw.com

PTOL-90A (Rev. 04/07)

UNITED STATES DEPARTMENT OF COMMERCE
U.S. Patent and Trademark Office
Address: COMMISSIONER FOR PATENTS
P.O. Box 1450
Alexandria, Virginia 22313-1450

APPLICATION NO./ CONTROL NO.	FILING DATE	FIRST NAMED INVENTOR/ PATENT IN REEXAMINATION	ATTORNEY DOCKET NO.
15/811,062	11/13/2017	Pyshos et al.	13682.227107

		EXAMINER	
King & Spalding LLP (Eaton/Cooper) ATTN: IP Docketing Department 1100 Louisiana Street, Suite 4000 Houston, TX 77002-5213		JIMMY T VU	
		ART UNIT	PAPER
		2844	20181227

DATE MAILED: _____

Please find below and/or attached an Office communication concerning this application or proceeding.

Commissioner for Patents

The references cited in the Information Disclosure Statement (IDS) filed on 12/04/2018 have been considered by the examiner. /JV/

/JIMMY T VU/
Primary Examiner, Art Unit 2844

PTO-90C (Rev.04-03)

PTO/SB/08A (08-03)
Approved for use through 07/31/2006. OMB 0651-0031
U.S. Patent and Trademark Office: U.S. DEPARTMENT OF COMMERCE
Under the Paperwork Reduction Act of 1995 no persons are required to respond to a collection of information unless it contains a valid OMB control number.

Substitute for form 1449A/PTO

INFORMATION DISCLOSURE STATEMENT BY APPLICANT

(use as many sheets as necessary)

Sheet	1	of	1

Complete if Known	
Application Number	**15/811,062**
Filing Date	**11-13-2017**
First Named Inventor	**Steven Walter Pyshos**
Group Art Unit	**2844**
Examiner Name	**Jimmy T. Vu**
Attorney Docket Number	**13682.227107**

U.S. PATENT DOCUMENTS

Examiner Initials *	Cite No. [1]	U.S. Patent Document Number	Kind Code (if known)	Name of Patentee or Applicant of Cited Document	Date of Publication of Cited Document MM-DD- YYYY	Pages Columns Lines Where Relevant Passages or Relevant Figures Appear
	1.	10,091,855		Van Winkle	10-02-2018	

FOREIGN PATENT DOCUMENTS

Examiner Initials *	Cite No. [1]	Foreign Patent Document Office[3]	Number	Kind Code[2] (if known)	Name of Patentee or Applicant of Cited Document	Date of Publication of Cited Document MM-DD- YYYY	Pages Columns Lines Where Relevant Passages or Relevant Figures Appear	T [6]

OTHER PRIOR ART – NON PATENT LITERATURE DOCUMENTS

Examiner Initials *	Cite No. [1]	Include name of the author (in CAPITAL LETTERS) title of the article (when appropriate) title of the item (book magazine journal serial symposium catalog etc.) date page(s) volume-issue number(s) publisher city and/or country where published.	T [6]

Examiner Signature	/JIMMY T VU/	Date Considered	12/11/2018

*EXAMINER: Initial if reference considered whether or not citation is in conformance with MPEP 609. Draw line through citation if not in conformance and not considered. Include copy of this form with next communication to applicant.

[1] Unique citation designation number. [2] See attached Kinds of U.S. Patent Documents. [3] Enter Office that issued the document by the two-letter code (WIPO Standard ST.3). [4] For Japanese patent documents the indication of the year of the reign of the Emperor must precede the serial number of the patent document. [5] Kind of document by the appropriate symbols as indicated on the document under WIPO Standard ST. 16 if possible. [6] Applicant is to place a check mark here if English language Translation is attached.

Burden Hour Statement: This form is estimated to take 2.0 hours to complete. Time will vary depending upon the needs of the individual case. Any comments on the amount of time you are required to complete this form should be sent to the Chief Information Officer U. S. Patent and Trademark Office Washington DC 20231. DO NOT SEND FEES OR COMPLETED FORMS TO THIS ADDRESS. SEND TO: Assistant Commissioner for Patents Washington DC 20231.
DMSLIBRARY01\33475041.v1

ALL REFERENCES CONSIDERED EXCEPT WHERE LINED THROUGH. /J.T.V/

PTO/SB/08A (08-03)
Approved for use through 07/31/2006. OMB 0651-0031
U.S. Patent and Trademark Office: U.S. DEPARTMENT OF COMMERCE
Under the Paperwork Reduction Act of 1995 no persons are required to respond to a collection of information unless it contains a valid OMB control number.

Substitute for form 1449A/PTO

INFORMATION DISCLOSURE STATEMENT BY APPLICANT

(use as many sheets as necessary)

Sheet	1	of	1

Complete if Known	
Application Number	**15/811,062**
Filing Date	**11-13-2017**
First Named Inventor	**Steven Walter Pyshos**
Group Art Unit	**2844**
Examiner Name	**Jimmy T. Vu**
Attorney Docket Number	**13682.227107**

U.S. PATENT DOCUMENTS

Examiner Initials *	Cite No. [1]	U.S. Patent Document Number	Kind Code (if known)	Name of Patentee or Applicant of Cited Document	Date of Publication of Cited Document MM-DD- YYYY	Pages Columns Lines Where Relevant Passages or Relevant Figures Appear
	1.	20100237798		Wolf	09-23-2010	

FOREIGN PATENT DOCUMENTS

Examiner Initials *	Cite No. [1]	Foreign Patent Document Office[3]	Number	Kind Code[2] (if known)	Name of Patentee or Applicant of Cited Document	Date of Publication of Cited Document MM-DD- YYYY	Pages Columns Lines Where Relevant Passages or Relevant Figures Appear	T [6]

OTHER PRIOR ART – NON PATENT LITERATURE DOCUMENTS

Examiner Initials *	Cite No. [1]	Include name of the author (in CAPITAL LETTERS) title of the article (when appropriate) title of the item (book magazine journal serial symposium catalog etc.) date page(s) volume-issue number(s) publisher city and/or country where published.	T [6]

Examiner Signature		Date Considered	

*EXAMINER: Initial if reference considered whether or not citation is in conformance with MPEP 609. Draw line through citation if not in conformance and not considered. Include copy of this form with next communication to applicant.

[1] Unique citation designation number. [2] See attached Kinds of U.S. Patent Documents. [3] Enter Office that issued the document by the two-letter code (WIPO Standard ST.3). [4] For Japanese patent documents the indication of the year of the reign of the Emperor must precede the serial number of the patent document. [5] Kind of document by the appropriate symbols as indicated on the document under WIPO Standard ST. 16 if possible. [6] Applicant is to place a check mark here if English language Translation is attached.

Burden Hour Statement: This form is estimated to take 2.0 hours to complete. Time will vary depending upon the needs of the individual case. Any comments on the amount of time you are required to complete this form should be sent to the Chief Information Officer U. S. Patent and Trademark Office Washington DC 20231. DO NOT SEND FEES OR COMPLETED FORMS TO THIS ADDRESS. SEND TO: Assistant Commissioner for Patents Washington DC 20231.
DMSLIBRARY01\33475041.v2

Electronic Patent Application Fee Transmittal	
Application Number:	15811062
Filing Date:	13-Nov-2017
Title of Invention:	Configurable Lighting System
First Named Inventor/Applicant Name:	Steven Walter Pyshos
Filer:	Robert Timothy Neufeld
Attorney Docket Number:	13682.227107

Filed as Large Entity

Filing Fees for Utility under 35 USC 111(a)

Description	Fee Code	Quantity	Amount	Sub-Total in USD($)
Basic Filing:				
Pages:				
Claims:				
Miscellaneous-Filing:				
Petition:				
Patent-Appeals-and-Interference:				
Post-Allowance-and-Post-Issuance:				
Extension-of-Time:				

Description	Fee Code	Quantity	Amount	Sub-Total in USD($)
Miscellaneous:				
SUBMISSION- INFORMATION DISCLOSURE STMT	1806	1	240	240
		Total in USD ($)		**240**

Electronic Acknowledgement Receipt	
EFS ID:	34797823
Application Number:	15811062
International Application Number:	
Confirmation Number:	1254
Title of Invention:	Configurable Lighting System
First Named Inventor/Applicant Name:	Steven Walter Pyshos
Customer Number:	91764
Filer:	Robert Timothy Neufeld
Filer Authorized By:	
Attorney Docket Number:	13682.227107
Receipt Date:	08-JAN-2019
Filing Date:	13-NOV-2017
Time Stamp:	19:55:22
Application Type:	Utility under 35 USC 111(a)

Payment information:

Submitted with Payment	yes
Payment Type	CARD
Payment was successfully received in RAM	$240
RAM confirmation Number	010919INTEFSW19561600
Deposit Account	
Authorized User	
The Director of the USPTO is hereby authorized to charge indicated fees and credit any overpayment as follows:	

File Listing:

Document Number	Document Description	File Name	File Size(Bytes)/ Message Digest	Multi Part /.zip	Pages (if appl.)
1	Transmittal Letter	227107trans.pdf	102105 ed576c7969450ec216f95cb8c340a3ffdb4df3a2	no	3
Warnings:					
Information:					
2	Information Disclosure Statement (IDS) Form (SB08)	227107ids.pdf	142021 d7a630d2eb8bde60cd70f156b390d6a7e30b351e	no	1
Warnings:					
Information:					
This is not an USPTO supplied IDS fillable form					
3	Fee Worksheet (SB06)	fee-info.pdf	30448 c523bc7ece50edb612d4106ae5c5e1b57cb33d61	no	2
Warnings:					
Information:					
		Total Files Size (in bytes):	274574		

This Acknowledgement Receipt evidences receipt on the noted date by the USPTO of the indicated documents, characterized by the applicant, and including page counts, where applicable. It serves as evidence of receipt similar to a Post Card, as described in MPEP 503.

<u>New Applications Under 35 U.S.C. 111</u>
If a new application is being filed and the application includes the necessary components for a filing date (see 37 CFR 1.53(b)-(d) and MPEP 506), a Filing Receipt (37 CFR 1.54) will be issued in due course and the date shown on this Acknowledgement Receipt will establish the filing date of the application.
<u>National Stage of an International Application under 35 U.S.C. 371</u>
If a timely submission to enter the national stage of an international application is compliant with the conditions of 35 U.S.C. 371 and other applicable requirements a Form PCT/DO/EO/903 indicating acceptance of the application as a national stage submission under 35 U.S.C. 371 will be issued in addition to the Filing Receipt, in due course.
<u>New International Application Filed with the USPTO as a Receiving Office</u>
If a new international application is being filed and the international application includes the necessary components for an international filing date (see PCT Article 11 and MPEP 1810), a Notification of the International Application Number and of the International Filing Date (Form PCT/RO/105) will be issued in due course, subject to prescriptions concerning national security, and the date shown on this Acknowledgement Receipt will establish the international filing date of the application.

IN THE UNITED STATES PATENT AND TRADEMARK OFFICE

In re Application of:	§	
Steven Walter Pyshos	§	Confirmation No.: **1254**
	§	
Application Serial No: **15/811,062**	§	Group Art Unit: **2844**
	§	
Filed: **11-13-2017**	§	Examiner: **Jimmy T. Vu**
	§	
For: **Configurable Lighting System**	§	Attorney Docket: **13682.227107**

INFORMATION DISCLOSURE STATEMENT

Commissioner for Patents
P.O. Box 1450
Alexandria, VA 22313-1450

Sir:

This Information Disclosure Statement is filed in accordance with 37 C.F.R. §§1.56, 1.97 and 1.98. The items listed on Form SB/08B are made of record to assist the Patent and Trademark Office in its examination of this application. The Examiner is respectfully requested to fully consider the items and to independently ascertain their teaching.

1. ☐ For each of the following items listed on the enclosed copy of Form SB/08B that is not in the English language, an English language translation of that item or a portion thereof or a concise explanation of the relevance of that item is enclosed:

2. ☐ For each of the following items listed on the enclosed copy of Form SB/08B that is not in the English language, a concise explanation of the relevance of that item is provided:

3. ☐ Any copy of the items listed on the enclosed copy of Form SB/08B that is not enclosed with this Information Disclosure Statement was previously cited by or submitted to the Patent and Trademark Office in application Serial No.

4. ☐ No fee is due under 37 C.F.R. §1.17(p) for this Information Disclosure Statement since it is being filed in compliance with:

   ☐ 37 C.F.R. §1.97(b)(1), within three months of the filing date of a national application other than a CPA; or

☐ 37 C.F.R. §1.97(b)(2), within three months of the date of entry into the national stage as set forth in §1.491 in an international application; or

☐ 37 C.F.R. §1.97(b)(3), before the mailing date of a first Office action on the merits; or

☐ 37 C.F.R. §1.97(b)(4) before the mailing date of a first office action after the filing of an RCE under §1.114

5. ☐ No fee is due under 37 C.F.R. §1.17(p) for this Supplemental Information Disclosure Statement since it is being filed in compliance with 37 C.F.R. §1.97(c), after the period specified in paragraph 4 above but before the mailing date of a final action or a Notice of Allowance (where there has been no prior final action), and is accompanied by one of the certifications pursuant to 37 C.F.R. §1.97(e) set forth in paragraph 9 below.

6. ☐ A fee is due under 37 C.F.R. §1.17(p) for this Supplemental Information Disclosure Statement since it is being filed in compliance with 37 C.F.R. §1.97(c), after the period specified in paragraph 4 above but before the mailing date of a final action or a notice of allowance (where there has been no prior final action):

☐ Payment of $240.00 is being made with a credit card via EFS-Web.

☐ Charge the fee to Deposit Account No.11-0980, Order No._____.

7. ☒ A fee is due under 37 C.F.R. §1.17(p) for this Supplemental Information Disclosure Statement since it is being filed in compliance with 37 C.F.R. §1.97(d), after the mailing date of a final action or a notice of allowance, whichever comes first, but before payment of the issue fee, and is accompanied by:

a. one of the certifications pursuant to 37 C.F.R. §1.97(e) set forth in paragraph 9 below; and

b. the fee due under 37 C.F.R. §1.17(p) which is paid as set forth in paragraph 11 below.

8. ☐ This Supplemental Information Disclosure Statement is being filed in compliance with:

a. ☐ 37 C.F.R. §1.313(b)(3) or §1.313(c)(1), after the issue fee has been paid and information cited in this Supplemental Information Disclosure Statement may render at least one claim unpatentable and is accompanied by the attached Petition To Withdraw Application From Issue and fee pursuant to 37 C.F.R. §1.17(h);

b. ☐ 37 C.F.R. §1.313(c)(2) or §1.313(c)(3), after the issue fee has been paid and information cited in this Supplemental Information Disclosure Statement is to be considered in a Request for Continued Examination (RCE) or a Continuation application upon abandonment of the instant application and is accompanied by the attached Petition To Withdraw Application From Issue and fee pursuant to 37 C.F.R. §1.17(h).

c. ☐ The fee due under 37 C.F.R. §§1.17(h) is paid as set forth in paragraph 11 below.

9. ☐ I hereby certify that each item of information contained in this Supplemental Information Disclosure Statement was first cited in a communication from a foreign patent office in a counterpart foreign application not more than three months prior to the filing of this Supplemental Information Disclosure Statement.

☒ I hereby certify that no item of information in the Supplemental Information Disclosure Statement filed herewith was cited in a communication from a foreign patent office in a counterpart foreign application or, to my knowledge after making reasonable inquiry, was known to any individual designated in §1.56(c) more than three months prior to the filing of this Supplemental Information Disclosure Statement.

10. ☐ This document is accompanied by ☐ a Search Report ☐ Communication which was cited in a corresponding ☐ PCT or ☐ Foreign counterpart application.

11. ☒ Charge any fees due under 37 C.F.R. §§1.17(h) and 1.17(p) to Deposit Account No.-110980.

☒ The Commissioner is hereby authorized to charge any additional fees which may be required for this Information Disclosure Statement, or credit any overpayment to Deposit Account No. 11-0980.

Respectfully submitted,
KING & SPALDING LLP

/Robert T. Neufeld/
Robert T. Neufeld
Reg. No. 48394

Correspondence Address:
King & Spalding LLP
1180 Peachtree Street
Atlanta, GA 30309
404-572-4600 Telephone
404-572-5100 Facsimile

PTO/SB/30EFS (07-14)
Approved for use through 07/31/2016. OMB 0651-0031
U.S. Patent and Trademark Office; U.S. DEPARTMENT OF COMMERCE
Under the Paperwork Reduction Act of 1995, no persons are required to respond to a collection of information unless it contains a valid OMB control number.

REQUEST FOR CONTINUED EXAMINATION(RCE)TRANSMITTAL
(Submitted Only via EFS-Web)

Application Number	15811062	Filing Date	2017-11-13	Docket Number (if applicable)	13682.227107	Art Unit	2844
First Named Inventor	Steven Walter Pyshos			Examiner Name	VU, JIMMY T		

This is a Request for Continued Examination (RCE) under 37 CFR 1.114 of the above-identified application.
Request for Continued Examination (RCE) practice under 37 CFR 1.114 does not apply to any utility or plant application filed prior to June 8, 1995, to any international application that does not comply with the requirements of 35 U.S.C. 371, or to any design application. The Instruction Sheet for this form is located at WWW.USPTO.GOV.

SUBMISSION REQUIRED UNDER 37 CFR 1.114

Note: If the RCE is proper, any previously filed unentered amendments and amendments enclosed with the RCE will be entered in the order in which they were filed unless applicant instructs otherwise. If applicant does not wish to have any previously filed unentered amendment(s) entered, applicant must request non-entry of such amendment(s).

☐ Previously submitted. If a final Office action is outstanding, any amendments filed after the final Office action may be considered as a submission even if this box is not checked.

- ☐ Consider the arguments in the Appeal Brief or Reply Brief previously filed on _____
- ☐ Other _____

☒ Enclosed

- ☐ Amendment/Reply
- ☒ Information Disclosure Statement (IDS)
- ☐ Affidavit(s)/ Declaration(s)
- ☐ Other _____

MISCELLANEOUS

☐ Suspension of action on the above-identified application is requested under 37 CFR 1.103(c) for a period of months _____
(Period of suspension shall not exceed 3 months; Fee under 37 CFR 1.17(i) required)

☐ Other _____

FEES

☒ **The RCE fee under 37 CFR 1.17(e) is required by 37 CFR 1.114 when the RCE is filed.**
The Director is hereby authorized to charge any underpayment of fees, or credit any overpayments, to Deposit Account No 110980

SIGNATURE OF APPLICANT, ATTORNEY, OR AGENT REQUIRED

☒ Patent Practitioner Signature
Applicant Signature

PTO/SB/30EFS (07-14)
Approved for use through 07/31/2016. OMB 0651-0031
U.S. Patent and Trademark Office; U.S. DEPARTMENT OF COMMERCE
Under the Paperwork Reduction Act of 1995, no persons are required to respond to a collection of information unless it contains a valid OMB control number.

Signature of Registered U.S. Patent Practitioner			
Signature	/Robert T. Neufeld/	Date (YYYY-MM-DD)	2019-01-16
Name	Robert T. Neufeld	Registration Number	48394

This collection of information is required by 37 CFR 1.114. The information is required to obtain or retain a benefit by the public which is to file (and by the USPTO to process) an application. Confidentiality is governed by 35 U.S.C. 122 and 37 CFR 1.11 and 1.14. This collection is estimated to take 12 minutes to complete, including gathering, preparing, and submitting the completed application form to the USPTO. Time will vary depending upon the individual case. Any comments on the amount of time you require to complete this form and/or suggestions for reducing this burden, should be sent to the Chief Information Officer, U.S. Patent and Trademark Office, U.S. Department of Commerce, P.O. Box 1450, Alexandria, VA 22313-1450.

If you need assistance in completing the form, call 1-800-PTO-9199 and select option 2.

Privacy Act Statement

The Privacy Act of 1974 (P.L. 93-579) requires that you be given certain information in connection with your submission of the attached form related to a patent application or patent. Accordingly, pursuant to the requirements of the Act, please be advised that: (1) the general authority for the collection of this information is 35 U.S.C. 2(b)(2); (2) furnishing of the information solicited is voluntary; and (3) the principal purpose for which the information is used by the U.S. Patent and Trademark Office is to process and/or examine your submission related to a patent application or patent. If you do not furnish the requested information, the U.S. Patent and Trademark Office may not be able to process and/or examine your submission, which may result in termination of proceedings or abandonment of the application or expiration of the patent.

The information provided by you in this form will be subject to the following routine uses:

1. The information on this form will be treated confidentially to the extent allowed under the Freedom of Information Act (5 U.S.C. 552) and the Privacy Act (5 U.S.C. 552a). Records from this system of records may be disclosed to the Department of Justice to determine whether the Freedom of Information Act requires disclosure of these records.

2. A record from this system of records may be disclosed, as a routine use, in the course of presenting evidence to a court, magistrate, or administrative tribunal, including disclosures to opposing counsel in the course of settlement negotiations.

3. A record in this system of records may be disclosed, as a routine use, to a Member of Congress submitting a request involving an individual, to whom the record pertains, when the individual has requested assistance from the Member with respect to the subject matter of the record.

4. A record in this system of records may be disclosed, as a routine use, to a contractor of the Agency having need for the information in order to perform a contract. Recipients of information shall be required to comply with the requirements of the Privacy Act of 1974, as amended, pursuant to 5 U.S.C. 552a(m).

5. A record related to an International Application filed under the Patent Cooperation Treaty in this system of records may be disclosed, as a routine use, to the International Bureau of the World Intellectual Property Organization, pursuant to the Patent Cooperation Treaty.

6. A record in this system of records may be disclosed, as a routine use, to another federal agency for purposes of National Security review (35 U.S.C. 181) and for review pursuant to the Atomic Energy Act (42 U.S.C. 218(c)).

7. A record from this system of records may be disclosed, as a routine use, to the Administrator, General Services, or his/her designee, during an inspection of records conducted by GSA as part of that agency's responsibility to recommend improvements in records management practices and programs, under authority of 44 U.S.C. 2904 and 2906. Such disclosure shall be made in accordance with the GSA regulations governing inspection of records for this purpose, and any other relevant (i.e., GSA or Commerce) directive. Such disclosure shall not be used to make determinations about individuals.

8. A record from this system of records may be disclosed, as a routine use, to the public after either publication of the application pursuant to 35 U.S.C. 122(b) or issuance of a patent pursuant to 35 U.S.C. 151. Further, a record may be disclosed, subject to the limitations of 37 CFR 1.14, as a routine use, to the public if the record was filed in an application which became abandoned or in which the proceedings were terminated and which application is referenced by either a published application, an application open to public inspections or an issued patent.

9. A record from this system of records may be disclosed, as a routine use, to a Federal, State, or local law enforcement agency, if the USPTO becomes aware of a violation or potential violation of law or regulation.

Electronic Patent Application Fee Transmittal	
Application Number:	15811062
Filing Date:	13-Nov-2017
Title of Invention:	Configurable Lighting System
First Named Inventor/Applicant Name:	Steven Walter Pyshos
Filer:	Robert Timothy Neufeld
Attorney Docket Number:	13682.227107

Filed as Large Entity

Filing Fees for Utility under 35 USC 111(a)

Description	Fee Code	Quantity	Amount	Sub-Total in USD($)
Basic Filing:				
Pages:				
Claims:				
Miscellaneous-Filing:				
Petition:				
Patent-Appeals-and-Interference:				
Post-Allowance-and-Post-Issuance:				
Extension-of-Time:				

Description	Fee Code	Quantity	Amount	Sub-Total in USD($)
Miscellaneous:				
RCE- 1ST REQUEST	1801	1	1300	1300
		Total in USD ($)		**1300**

Electronic Acknowledgement Receipt	
EFS ID:	34868425
Application Number:	15811062
International Application Number:	
Confirmation Number:	1254
Title of Invention:	Configurable Lighting System
First Named Inventor/Applicant Name:	Steven Walter Pyshos
Customer Number:	91764
Filer:	Robert Timothy Neufeld
Filer Authorized By:	
Attorney Docket Number:	13682.227107
Receipt Date:	16-JAN-2019
Filing Date:	13-NOV-2017
Time Stamp:	18:02:34
Application Type:	Utility under 35 USC 111(a)

Payment information:

Submitted with Payment	yes
Payment Type	CARD
Payment was successfully received in RAM	$1300
RAM confirmation Number	011719INTEFSW18031400
Deposit Account	110980
Authorized User	Sally Sexton
The Director of the USPTO is hereby authorized to charge indicated fees and credit any overpayment as follows: 37 CFR 1.16 (National application filing, search, and examination fees) 37 CFR 1.17 (Patent application and reexamination processing fees)	

37 CFR 1.19 (Document supply fees)

37 CFR 1.20 (Post Issuance fees)

37 CFR 1.21 (Miscellaneous fees and charges)

File Listing:

Document Number	Document Description	File Name	File Size(Bytes)/ Message Digest	Multi Part /.zip	Pages (if appl.)
1	Transmittal Letter	227107trans.pdf	94319 451f2d61ecc506923962756cf64a974b5b0789cf	no	1
Warnings:					
Information:					
2	Information Disclosure Statement (IDS) Form (SB08)	227107ids.pdf	144586 ab79b4db4ccc44d77271da1f79511d1976424369	no	1
Warnings:					
Information:					
This is not an USPTO supplied IDS fillable form					
3	Foreign Reference	cn201844227.pdf	297920 aec582be44eb2a2179c165c18ec20add46c4355f	no	6
Warnings:					
Information:					
4	Foreign Reference	encn201844227.pdf	166903 c2dc2a48166bc6997f9e0df724a907975c2f1cb4	no	5
Warnings:					
Information:					
5	Other Reference-Patent/App/Search documents	ISR.pdf	264994 a39529861e1c9c261f9660c7d936bae6073b154a	no	4
Warnings:					
Information:					
6	Request for Continued Examination (RCE)	rce227107.pdf	1349878 22faf582ac676e6f7240021f64611ed4be24f0ac	no	3
Warnings:					

Information:					
7	Fee Worksheet (SB06)	fee-info.pdf	29842 2f5ee261ed818326a79e6cab4cddf6c6760fbd7a	no	2
Warnings:					
Information:					
			Total Files Size (in bytes):	2348442	

This Acknowledgement Receipt evidences receipt on the noted date by the USPTO of the indicated documents, characterized by the applicant, and including page counts, where applicable. It serves as evidence of receipt similar to a Post Card, as described in MPEP 503.

New Applications Under 35 U.S.C. 111
If a new application is being filed and the application includes the necessary components for a filing date (see 37 CFR 1.53(b)-(d) and MPEP 506), a Filing Receipt (37 CFR 1.54) will be issued in due course and the date shown on this Acknowledgement Receipt will establish the filing date of the application.
National Stage of an International Application under 35 U.S.C. 371
If a timely submission to enter the national stage of an international application is compliant with the conditions of 35 U.S.C. 371 and other applicable requirements a Form PCT/DO/EO/903 indicating acceptance of the application as a national stage submission under 35 U.S.C. 371 will be issued in addition to the Filing Receipt, in due course.
New International Application Filed with the USPTO as a Receiving Office
If a new international application is being filed and the international application includes the necessary components for an international filing date (see PCT Article 11 and MPEP 1810), a Notification of the International Application Number and of the International Filing Date (Form PCT/RO/105) will be issued in due course, subject to prescriptions concerning national security, and the date shown on this Acknowledgement Receipt will establish the international filing date of the application.

IN THE UNITED STATES PATENT AND TRADEMARK OFFICE

In re Application of:	§	
Steven Walter Pyshos	§	Confirmation No.: **1254**
	§	
Application Serial No: **15/811,062**	§	Group Art Unit: **2844**
	§	
Filed: **11-13-2017**	§	Examiner: **Jimmy T. Vu**
	§	
For: **Configurable Lighting System**	§	
	§	

INFORMATION DISCLOSURE STATEMENT

Commissioner for Patents
P.O. Box 1450
Alexandria, VA 22313-1450

Sir:

Applicants cite the information on the attached Form PTO/SB/08A, "Information Disclosure Statement by Applicant," pursuant to 37 C.F.R. §§ 1.56, 1.97, and 1.98.

The citation of this information does not constitute an admission that any of the materials are available as a reference or of priority, or a waiver of any right Applicants may have under applicable statutes, Rules of Practice in patent cases, or otherwise.

No fee is believed to be due; however, the Commissioner is authorized to charge any fee as well as any other deficiency or credit any overpayment to Deposit Account 11-0980.

KING & SPALDING LLP
Intellectual Property Dept. - Patents
1180 Peachtree Street, N.E.
34th Floor
Atlanta, Georgia 30309-3521
Telephone (404) 572-4600
Attorney Docket: 13682.227107

Respectfully submitted,

/Robert T. Neufeld/

Robert T. Neufeld
Reg. No. 48,394

PTO/SB/08A (08-03)
Approved for use through 07/31/2006. OMB 0651-0031
U.S. Patent and Trademark Office: U.S. DEPARTMENT OF COMMERCE
Under the Paperwork Reduction Act of 1995 no persons are required to respond to a collection of information unless it contains a valid OMB control number.

Substitute for form 1449A/PTO

INFORMATION DISCLOSURE STATEMENT BY APPLICANT

(use as many sheets as necessary)

Sheet	1	of	1

Complete if Known	
Application Number	**15/811062**
Filing Date	**11-13-2017**
First Named Inventor	**Steven Walter Pyshos**
Group Art Unit	**2844**
Examiner Name	**Jimmy T. Vu**
Attorney Docket Number	**13682.227107**

U.S. PATENT DOCUMENTS

Examiner Initials *	Cite No. [1]	U.S. Patent Document Number	Kind Code (if known)	Name of Patentee or Applicant of Cited Document	Date of Publication of Cited Document MM-DD- YYYY	Pages Columns Lines Where Relevant Passages or Relevant Figures Appear
	1.	2013/0114241		Antony Paul Van de Ven. et al.	05-09-2013	
	2.	8947013		Sehat Sutardja et al.	02-03-2015	
	3.	9144129		David Munday et al.	09-22-2015	
	4.	9072148		Kenichiro Tanaka et al.	06-30-2015	
	5.	2008/0060917		Chen Chia-Li et al.	03-13-2008	
	6.	6149283		Kathryn M. Conway et al.	11-21-2000	
	7.	6127783		Michael D. Pashley et al.	10-03-2000	

FOREIGN PATENT DOCUMENTS

Examiner Initials *	Cite No. [1]	Foreign Patent Document Office[3]	Number	Kind Code[2] (if known)	Name of Patentee or Applicant of Cited Document	Date of Publication of Cited Document MM-DD- YYYY	Pages Columns Lines Where Relevant Passages or Relevant Figures Appear	T [6]
	8.	CN	201844227		Tianjin Star Sea Electronics Technology Co LTD.	05-25-2011		

OTHER PRIOR ART – NON PATENT LITERATURE DOCUMENTS

Examiner Initials *	Cite No. [1]	Include name of the author (in CAPITAL LETTERS) title of the article (when appropriate) title of the item (book magazine journal serial symposium catalog etc.) date page(s) volume-issue number(s) publisher city and/or country where published.	T [6]
	9	International Search Report for PCT/US2018/047718, mailed November 29, 2018.	

Examiner Signature		Date Considered	

*EXAMINER: Initial if reference considered whether or not citation is in conformance with MPEP 609. Draw line through citation if not in conformance and not considered. Include copy of this form with next communication to applicant.

[1] Unique citation designation number. [2] See attached Kinds of U.S. Patent Documents. [3] Enter Office that issued the document by the two-letter code (WIPO Standard ST.3). [4] For Japanese patent documents the indication of the year of the reign of the Emperor must precede the serial number of the patent document. [5] Kind of document by the appropriate symbols as indicated on the document under WIPO Standard ST. 16 if possible. [6] Applicant is to place a check mark here if English language Translation is attached.

Burden Hour Statement: This form is estimated to take 2.0 hours to complete. Time will vary depending upon the needs of the individual case. Any comments on the amount of time you are required to complete this form should be sent to the Chief Information Officer U. S. Patent and Trademark Office Washington DC 20231. DO NOT SEND FEES OR COMPLETED FORMS TO THIS ADDRESS. SEND TO: Assistant Commissioner for Patents Washington DC 20231.
DMSLIBRARY01\33726576.v1

PCT

NOTIFICATION OF TRANSMITTAL OF THE INTERNATIONAL SEARCH REPORT AND THE WRITTEN OPINION OF THE INTERNATIONAL SEARCHING AUTHORITY, OR THE DECLARATION

(PCT Rule 44.1)

To:
Timothy Smith
King & Spalding 1100 Louisiana, Suite 4000
Houston, TX 77002-5213
United States of America

JAN 14 2019
HOUSTON DOCKETING

Date of mailing *(day/month/year)* 29 November 2018 (29.11.2018)	
Applicant's or agent's file reference 13682.227347 3/12-HLD-394 PCT	**FOR FURTHER ACTION** See paragraphs 1 and 4 below
International application No. PCT/US 2018/047718	International filing date *(day/month/year)* 23 August 2018 (23.08.2018)
Applicant EATON INTELLIGENT POWER LIMITED	

DOCKETED ☑ UPDATED ☐
Previously ___ NotRequired ___
Applicable ___
Actionrequired: ARTICLE 19 DUE
Done: 1/29/2019
Checked ___

1. [X] The applicant is hereby notified that the international search report and the written opinion of the International Searching Authority have been established and are transmitted herewith.

   Filing of amendments and statement under Article 19:

   The applicant is entitled, if he so wishes, to amend the claims of the international application (see Rule 46).

   When? The time limit for filing such amendments is normally two months from the date of transmittal of the international search report.

   How? Directly to the International Bureau of WIPO, preferably through ePCT or on paper to, 34 chemin des Colombettes 1211 Geneva 20, Switzerland, Facsimile No.: +41 22 338 82 70

   For more detailed instructions, see *PCT Applicant's Guide*, International Phase, paragraphs 9.004 – 9.011.

2. [ ] The applicant is hereby notified that no international search report will be established and that the declaration under Article 17(2)(a) to that effect and the written opinion of the International Searching Authority are transmitted herewith.

3. [ ] **With regard to any protest** against payment of (an) additional fee(s) under Rule 40.2, the applicant is notified that:

   [ ] the protest together with the decision thereon has been transmitted to the International Bureau together with any request to forward the texts of both the protest and the decision thereon to the designated Offices.

   [ ] no decision has been made yet on the protest; the applicant will be notified as soon as a decision is made.

4. **Reminders**

   The applicant may **submit comments on an informal basis on the written opinion of the International Searching Authority** to the International Bureau. These comments will be made available to the public after international publication. The International Bureau will send a copy of such comments to all designated Offices unless an international preliminary examination report has been or is to be established.

   Shortly after the expiration of **18 months from the priority date, the international application will be published** by the International Bureau. If the applicant wishes to avoid or postpone publication, a notice of withdrawal of the international application, or of the priority claim, must reach the International Bureau before the completion of the technical preparations for international publication (Rules 90*bis*.1 and 90*bis*.3).

   Within **19 months** from the priority date, but only in respect of some designated Offices, a demand for international preliminary examination must be filed if the applicant wishes to postpone the entry into the national phase **until 30 months** from the priority date (in some Offices even later); otherwise, the applicant must, **within 20 months** from the priority date, perform the prescribed acts for **entry into the national phase** before those designated Offices. In respect of other designated Offices, the time limit of **30 months** (or later) will apply even if no demand is filed within 19 months. For details about the applicable time limits, Office by Office, see www.wipo.int/pct/en/texts/time_limits.html and the *PCT Applicant's Guide*, National Chapters.

   Within **22 months from priority date, the applicant may request that a supplementary international search be carried out** by a different International Searching Authority that offers this service (Rule 45*bis*.1). The procedure for requesting supplementary international search is described in the *PCT Applicant's Guide*, International Phase, paragraphs 8.006-8.032.

Name and mailing address of the ISA/RU: Federal Institute of Industrial Property, Berezhkovskaya nab., 30-1, Moscow, G-59, GSP-3, Russia, 125993 Facsimile No: (8-495) 531-63-18, (8-499) 243-33-37	Authorized officer O. Makarova Telephone No. 8-495-531-64-81

Form PCT/ISA/220 (July 2017)

PCT

INTERNATIONAL SEARCH REPORT

(PCT Article 18 and Rules 43 and 44)

Applicant's or agent's file reference 13682.227347	**FOR FURTHER ACTION**	see Form PCT/ISA/220 as well as, where applicable, item 5 below.
International application No. PCT/US 2018/047718	International filing date *(day/month/year)* 23 August 2018 (23.08.2018)	(Earliest) Priority Date *(day/month/year)* 24 August 2017 (24.08.2017)
Applicant EATON INTELLIGENT POWER LIMITED		

This international search report has been prepared by this International Searching Authority and is transmitted to the applicant according to Article 18. A copy is being transmitted to the International Bureau.

This international search report consists of a total of 3 sheets.

☐ It is also accompanied by a copy of each prior art document cited in this report.

1. **Basis of the report**
   a. With regard to the **language**, the international search was carried out on the basis of:
      ☒ the international application in the language in which it was filed.
      ☐ a translation of the international application into _____, which is the language of a translation furnished for the purposes of international search (Rules 12.3(a) and 23.1(b)).
   b. ☐ This international search report has been established taking into account the **rectification of an obvious mistake** authorized by or notified to this Authority under Rule 91 (Rule 43.6*bis*(a)).
   c. ☐ With regard to any **nucleotide and/or amino acid sequence** disclosed in the international application, see Box No. I.
2. ☐ **Certain claims were found unsearchable** (see Box No. II).
3. ☐ **Unity of invention is lacking** (see Box No. III).
4. With regard to the **title,**
   ☒ the text is approved as submitted by the applicant.
   ☐ the text has been established by this Authority to read as follows:
5. With regard to the **abstract,**
   ☒ the text is approved as submitted by the applicant.
   ☐ the text has been established, according to Rule 38.2, by this Authority as it appears in Box No. IV. The applicant may, within one month from the date of mailing of this international search report, submit comments to this Authority.
6. With regard to the **drawings,**
   a. the figure of the drawings to be published with the abstract is Figure No. 1A
      ☐ as suggested by the applicant.
      ☒ as selected by this Authority, because the applicant failed to suggest a figure.
      ☐ as selected by this Authority, because this figure better characterizes the invention.
   b. ☐ none of the figures is to be published with the abstract.

Luminex v. Signify
Luminex Exhibit 1021
Page 176

INTERNATIONAL SEARCH REPORT	PCT/US 2018/047718

A. CLASSIFICATION OF SUBJECT MATTER

F21V 9/40 (2018.01)

According to International Patent Classification (IPC) or to both national classification and IPC

B. FIELDS SEARCHED

Minimum documentation searched (classification system followed by classification symbols)

G06F 13/00, 13/38, 13/40, 13/42, 21/00, 21/50, 21/55, 21/56, 21/00, 21/70, 21/81, H04L 29/06, 29/02, 29/06

Documentation searched other than minimum documentation to the extent that such documents are included in the fields searched

Electronic data base consulted during the international search (name of data base and, where practicable, search terms used)

PatSearch (RUPTO internal), USPTO, PAJ, Esp@cenet, Information Retrieval System of FIPS

C. DOCUMENTS CONSIDERED TO BE RELEVANT

Category*	Citation of document, with indication, where appropriate, of the relevant passages	Relevant to claim No.
Y	US 2013/0114241 A1 (CREE, INC.) 09.05.2013, fig .1-6, 9, paragraphs [0087]-[0091]	1-15
Y	US 8947013 B2 (MARVELL WORLD TRADE LTD.) 03.02.2015, fig .3A, 3B, column 15, lines 23-34, 50-60	1-15
Y	US 9144129 B2 (THE REGENTS OF THE UNIVERSITY OF CALIFORNIA) 22.09.2015, fig. 1,2, column 2, lines 46-51, column 3, lines 22-30, 35-53	3, 4, 6, 7, 9, 10, 12,13
Y	US 9072148 B2 (PANASONIC INTELLECTUAL PROPERTY MANAGEMENT) 30.06.2015, fig. 1, column 4, lines 41-54	5,11
Y	US 2008/0060917 A1 (CHEN CHIA-LI et al) 13.03.2008, fig.1, abstract	15

[X] Further documents are listed in the continuation of Box C. [ ] See patent family annex.

* Special categories of cited documents:

"A" document defining the general state of the art which is not considered to be of particular relevance

"E" earlier document but published on or after the international filing date

"L" document which may throw doubts on priority claim(s) or which is cited to establish the publication date of another citation or other special reason (as specified)

"O" document referring to an oral disclosure, use, exhibition or other means

"P" document published prior to the international filing date but later than the priority date claimed

"T" later document published after the international filing date or priority date and not in conflict with the application but cited to understand the principle or theory underlying the invention

"X" document of particular relevance; the claimed invention cannot be considered novel or cannot be considered to involve an inventive step when the document is taken alone

"Y" document of particular relevance; the claimed invention cannot be considered to involve an inventive step when the document is combined with one or more other such documents, such combination being obvious to a person skilled in the art

"&" document member of the same patent family

Date of the actual completion of the international search	Date of mailing of the international search report
22 October 2018 (22.10.2018)	29 November 2018 (29.11.2018)
Name and mailing address of the ISA/RU: Federal Institute of Industrial Property, Berezhkovskaya nab., 30-1, Moscow, G-59, GSP-3, Russia, 125993 Facsimile No: (8-495) 531-63-18, (8-499) 243-33-37	Authorized officer T. Vlasenko Telephone No. (495) 531-64-81

Form PCT/ISA/210 (second sheet) (January 2015)

C (Continuation). DOCUMENTS CONSIDERED TO BE RELEVANT

Category*	Citation of document, with indication, where appropriate, of the relevant passages	Relevant to claim No.
A	US 6149283 A (RENSSELAER POLYTECHNIC INSTITUTE (RPI) 21.11.2000, abstract	1-15
A	CN 201844227 U (TIANJIN STAR SEA ELECTRONICS TECHNOLOGY CO LTD) 25.05.2011, claims, fig .3	1-15
A	US 6127783 A (PHILIPS ELECTRONICS NORTH AMERICA CORP.) 03.10.2000	1-15

144DPM

********** Cover Page **********

Delivery Information

Time of Request: Wednesday, January 16, 2019 21:48:59
Client ID/Project Name: 99997-000000-009206 xxxx
Number of Lines: 141
Job Number: 2826:659998779

Research Information

Source: CN
Search Terms: (pub-id(CN201844227U))

1 of 1 DOCUMENT

CN201844227U 2011-05-25 Indoor energy-saving lamp with controllable color temperature of light-emitting diode (en)

English Abstract:

The utility model discloses an indoor energy-saving lamp with controllable color temperature of a light-emitting diode, which comprises a glass shell, a color temperature selecting switch, a controller, a connector, a radiator and an LED (light-emitting diode) light source, wherein the glass shell is positioned on the radiator, the radiator is connected with the connector by a connecting piece, the color temperature selecting switch is embedded in the radiator, the controller is arranged in the radiator, an aluminum-based board is arranged on the top of the radiator, and a plurality of multi-color-temperature high-lighting-effect LED chips are arranged on the aluminum-based board. The indoor energy-saving lamp has the following advantages: 1. The radiator is used for dissipating heat generated in packaging of a LED bulb by the aluminum-based board, thus prolonging the service life of the whole LED bulb; 2. The controlled is used for controlling and guaranteeing the whole circuit to run normally, thus being capable of guaranteeing the working stability and safety of the energy-saving lamp; and 3. The surface of the glass shell is uneven, thus being capable of preventing glare effectively.

Standardized Assignees: TIANJIN STAR SEA ELECTRONICS TECHNOLOGY

Original Assignees: TIANJIN STAR SEA ELECTRONICS TECHNOLOGY CO LTD, 301800 天津市宝坻经济开发区宝强路2号

Current Assignees: TIANJIN STAR SEA ELECTRONICS TECHNOLOGY CO LTD

Inventors: BAOXING JIA;
TAO WU;
LIZHENG FANG

Attorneys: 天津盛理知识产权代理有限公司 12209 (董一宁)

Application Number: CN201020281696

Luminex v. Signify
Luminex Exhibit 1021
Page 179

Application/Filing Date: 2010-08-04

Priority Number and Date: CN201020281696 2010-08-04

Classifications:
CPC: Y02B20/40 (2013-01-01; A 2013-01-01; B, H, EP)
IPC[8]: F21K9/232 (2016-01-01; A, , I, 2017-02-09; R, H, CN)
IPC[8]: F21K9/238 (2016-01-01; A, , I, 2017-02-09; R, H, CN)
IPC[8]: F21V15/02 (2006-01-01; A, L, I, 2011-12-09; B, H, CN)
IPC[8]: F21V17/00 (2006-01-01; A, L, I, 2011-12-09; B, H, CN)
IPC[8]: F21V19/00 (2006-01-01; A, L, I, 2011-12-09; B, H, CN)
IPC[8]: F21V23/04 (2006-01-01; A, L, I, 2011-12-09; B, H, CN)
IPC[8]: F21V29/508 (2015-01-01; A, , I, 2015-12-08; R, H, CN)
IPC[8]: F21V29/71 (2015-01-01; A, , I, 2015-12-08; R, H, CN)
IPC[8]: F21Y115/10 (2016-01-01; A, , N, 2017-02-09; R, H, CN)
IPC[8]: H05B37/02 (2006-01-01; A, L, I, 2011-12-09; B, H, CN)
ICO: Y02B20/40

Patent References Cited-Forward:

Publication Number
CN102635795A

English Description:

Technical Field:

The utility model relates to a lighting equipment, in particular to a light-emitting diode a controllable color temperature indoor energy-saving lamp.

Background Art:

Within the range in different areas, because of the geographical differences in the region, climate differences, so that the different regions of different illumination effect there is an enormous difference between the comfort level. But also in respect of the same area, because the season, climate change, the same kind of color temperature lamp shown there will be a great comfort differences, this kind of difference in the performance of the indoor illumination which is particularly outstanding. The traditional lamps and lanterns by the technical and technological constraints, the different groups is very difficult to satisfy the requirements of the light color temperature.

Content of the invention:

The purpose of the utility model is to overcome the above-mentioned deficiencies in the prior art, light-emitting diode to provide a controllable color temperature indoor energy-saving lamp, the energy-saving and energy-saving environmental protection, controllable color temperature, and low consumption and high efficiency.

The idea, the technical solution of the utility model is:a kind of light-emitting diode a controllable color temperature indoor energy-saving lamp, characterized in that the glass shell, color temperature selection switch, the controller, interface, the radiator and the LED light source; the glass casing is located on the top of the radiator, the radiator is connected with the interface through the connecting piece, color temperature selection switch is embedded in the top of the radiator, the heat dissipation body placed inside the controller, the top of the body of

Luminex v. Signify
Luminex Exhibit 1021
Page 180

the aluminum substrate is heat, the aluminum base plate is placed on the high light efficiency of the plurality of multi-color LED chip.

The above-mentioned interface adopts a spiral type, in-line, extrusion.

The above-mentioned plurality of multi-color high-light efficiency of the LED chip is divided into two links by the color temperature selection switch to control, respectively, a warm white strip is formed by the LED lamp which are connected in series, the strip is made from cold white LED lamps are connected in series or in parallel.

The above-mentioned glass a concavo-convex surface of the outer shell.

The above-mentioned control device, the master control circuit comprises a rectifying and filtering circuit, power management chip, transformer and switch triode, wherein, in the front end of the output end of the rectifier and filter circuit is connected with the primary of the transformer, the output end of the primary coil of the transformer is connected with the collecting electrode of the switch transistor, switch with the base electrode of the triode power management chip is connected with the input port, the output signal of the power management chip which generates high-frequency pulse the alternating current, and the transformer secondary rectifying filtering circuit to output a stable direct current voltage.

The utility model has the following advantages and effects:

1, through the heating body LED lamp bulb for the aluminum base plate to disperse the heat emitted from the package, the entire LED so as to prolong the service life of ball bubble lamp.

2, through the controller to control and ensure the normal operation of the whole circuit, thereby ensuring the stability of the work of the energy-saving lamp and safety.

3, the surface of the glass shell is rugged, can effectively prevent glare.

Description of drawings:

Figure 1 is the outside drawing of the utility model.

Figure 2 is the internal structure of the utility model schematic diagram.

Figure 3 is Figure 2 A-A section of the Figure.

Figure 4 is an electrical schematic diagram of the controller.

Mode of execution:

As shown in Figure 1, 2, 3 shown by:a light emitting diode controlled color temperature indoor energy-saving lamp, comprising a glass shell 1, color temperature selection switch 2, controller 3, interface 4, aluminum radiator 5 and LED light source 6 composition. Interface 4 controllable color temperature located in the bottom of the LED energy-saving lamp, can choose the screw-type, in-line, multi-way extrusion, and the like, and is connected with the electrode of the external interface is connected. Aluminum radiator 5 is made of aluminum die casting made of metal materials, the plastic connecting piece 7 and the interface 4 is connected with the, color temperature selection switch 2 embedded in the aluminum radiator 5 the top of the, aluminum radiator 5 placed inside the controller 3, the aluminum radiator 5 is placed at the top of the aluminum base plate 8, six different color temperature of the plurality of high light efficiency LED chip (light emitting diode) in aluminum base plate 8 above, the aluminum base plate 8 fast of heat conduction, it has very good heat dissipation effect. The above-mentioned six multi-color high-light efficiency of the LED chip is divided into two links by the color temperature selection

Luminex v. Signify
Luminex Exhibit 1021
Page 181

switch to control, respectively, a warm white strip is formed by the LED lamp which are connected in series, the strip is made from cold white LED lamps are connected in series or in parallel.

The above-mentioned aluminum radiator 5 is used to disperse the LED aluminum base plate lamp bulb 8 the heat emitted, thereby ensuring that the whole LED ball bulb the service life of the lamp. Controller 3 and is used to control the normal operation of the whole circuit can be guaranteed. The glass casing 1 is located in an aluminum radiator 5 the top, used for protecting the light-emitting device and to radiate the visible light, the glass casing 1 when the processing of the mold, the glass shell 1 by a plastic mould high speed mill processing, the glass shell 1 becomes smooth surface of the concave is not smooth with, can effectively prevent glare. Wire 9 is located on the inside of the lamp, is used for the various devices together in an orderly manner, LED ball bubble lamp is ensured after the power supply is switched on, can be normally working.

As shown in Figure 4, the controller of the utility model the master control circuit of the different color LED through the selective on-off, to obtain the different color temperature value, the power management chip to realize a constant current control circuit, generating a corresponding current value thereof especially suitable for driving LED lamp. Main control circuit of this invention is designed around the power management chip, its through the front-end rectifier and filter, to the transformer primary, three-pole tube through the switch, power management chip, the transformation in the switch is turned on, generating a high-frequency pulse AC, through the transformer secondary rectifying filtering circuit to output a stable direct current voltage.

Number of Claims: 5

ENGLISH CLAIMS:

1. A light-emitting diode a controllable color temperature indoor energy-saving lamp, characterized in that the glass shell, color temperature selection switch, the controller, interface, the radiator and the LED light source; the glass casing is located on the top of the radiator, the radiator is connected with the interface through the connecting piece, color temperature selection switch is embedded in the top of the radiator, the heat dissipation body placed inside the controller, the top of the body of the aluminum substrate is heat, the aluminum base plate is placed on the high light efficiency of the plurality of multi-color LED chip.

2. A light-emitting diode a controllable color temperature indoor energy-saving lamp according to Claim 1, characterized in that the above-mentioned interface adopts a spiral type, in-line, extrusion.

3. A light-emitting diode a controllable color temperature indoor energy-saving lamp according to Claim 1, characterized in that the above-mentioned plurality of multi-color high-light efficiency of the LED chip is divided into two links by the color temperature selection switch to control, respectively, a warm white strip is formed by the LED lamp which are connected in series, the strip is made from cold white LED lamps are connected in series or in parallel.

4. A light-emitting diode a controllable color temperature indoor energy-saving lamp according to Claim 1, characterized in that the above-mentioned glass a concavo-convex surface of the outer shell.

5. A light-emitting diode a controllable color temperature indoor energy-saving lamp according to Claim 1, characterized in that the above-mentioned control device, the master control circuit comprises a rectifying and filtering circuit, power management chip, transformer and switch triode, wherein, the front end of the output end of the rectifier and filter circuit is connected with the primary of the transformer, the output end of the primary coil of the

Luminex v. Signify
Luminex Exhibit 1021
Page 182

transformer is connected with the collecting electrode of the switch transistor, switch with the base electrode of the triode power management chip is connected with the input port, the output signal of the power management chip which generates high-frequency pulse the alternating current, and the transformer secondary rectifying filtering circuit to output a stable direct current voltage.

144DPM

********** Print Completed **********

Time of Request: Wednesday, January 16, 2019 21:48:59

Print Number: 2826:659998779
Number of Lines: 141
Number of Pages: 1

Luminex v. Signify
Luminex Exhibit 1021
Page 183

(19)中华人民共和国国家知识产权局

(12)实用新型专利

(10)授权公告号 CN 201844227 U
(45)授权公告日 2011.05.25

(21)申请号 201020281696.7

(22)申请日 2010.08.04

(73)专利权人 天津星洋电子科技有限公司
地址 301800 天津市宝坻经济开发区宝强路2号

(72)发明人 贾宝兴 武弢 房力争

(74)专利代理机构 天津盛理知识产权代理有限公司 12209
代理人 董一宁

(51)Int.Cl.
F21S 2/00(2006.01)
F21V 17/00(2006.01)
F21V 19/00(2006.01)
F21V 23/04(2006.01)
F21V 29/00(2006.01)
F21V 15/02(2006.01)
H05B 37/02(2006.01)
F21Y 101/02(2006.01)

(ESM)同样的发明创造已同日申请发明专利

权利要求书 1 页 说明书 2 页 附图 2 页

(54)实用新型名称

一种发光二极管可控色温室内节能灯

(57)摘要

一种发光二极管可控色温室内节能灯，由玻璃外壳、色温选择开关、控制器、接口、散热体和LED光源组成；玻璃外壳位于散热体的上面，散热体通过连接件与接口连接，色温选择开关嵌入于散热体的上面，散热体内部放置控制器、散热体顶部放置铝基板，铝基板上放置多颗多色温的高光效LED芯片。本实用新型的优点是：1、通过散热体用来驱散LED灯珠铝基板封装所散发出的热量，从而延长了整个LED球泡灯的使用寿命。2、通过控制器来控制和保证整个电路的正常运行，从而可保证节能灯工作的稳定性和安全性。3、玻璃外壳的表面凹凸不平，可以有效的防止眩光。

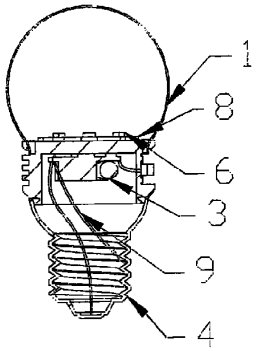

CN 201844227 U

1. 一种发光二极管可控色温室内节能灯，其特征在于：由玻璃外壳、色温选择开关、控制器、接口、散热体和 LED 光源组成；玻璃外壳位于散热体的上面，散热体通过连接件与接口连接，色温选择开关嵌入于散热体的上面，散热体内部放置控制器、散热体顶部放置铝基板，铝基板上放置多颗多色温的高光效 LED 芯片。

2. 根据权利要求 1 所述的一种发光二极管可控色温室内节能灯，其特征在于：上述接口采用螺旋式、直插式、挤压式。

3. 根据权利要求 1 所述的一种发光二极管可控色温室内节能灯，其特征在于：上述多颗多色温的高光效 LED 芯片分为两条链路分别由色温选择开关控制，一条是由暖白色 LED 灯串联组成，一条是由冷白色 LED 灯串联或并联组成。

4. 根据权利要求 1 所述的一种发光二极管可控色温室内节能灯，其特征在于：上述玻璃外壳的表面有凹凸。

5. 根据权利要求 1 所述的一种发光二极管可控色温室内节能灯，其特征在于：上述控制器的主控电路包括整流滤波电路、电源管理芯片、变压器和开关三极管，其中，前端整流滤波电路的输出端与变压器的初级连接，变压器初级的输出端与开关三极管的集电极连接、开关三极管的基极与电源管理芯片的输入端口连接、电源管理芯片的输出信号经过变压产生高频脉冲交流，并经变压器次级整流滤波后输出稳定的直流电压。

Luminex v. Signify
Luminex Exhibit 1021
Page 185

一种发光二极管可控色温室内节能灯

技术领域：

[0001] 本实用新型属于一种照明器材，特别涉及一种发光二极管可控色温室内节能灯。

背景技术：

[0002] 在不同地区范围内，由于各地区所处的地域差异、气候差异，使得各地区人群对不同照明效果表现出来的舒适度有很大差别。而且就同一地区而言，因为季节、气候的变化，对同一种色温灯具所表现出来的舒适度也会有很大差异，这种差异在室内照明上表现的尤为突出。而传统灯具受技术和工艺上的限制，很难满足不同人群对灯光色温的要求。

发明内容：

[0003] 本实用新型的目的就在于克服上述现有技术中存在的不足，而提供一种发光二极管可控色温室内节能灯，该节能灯节能环保、色温可控，并且低耗高效。

[0004] 如上构思，本实用新型的技术方案是：一种发光二极管可控色温室内节能灯，其特征在于：由玻璃外壳、色温选择开关、控制器、接口、散热体和 LED 光源组成；玻璃外壳位于散热体的上面，散热体通过连接件与接口连接，色温选择开关嵌入于散热体的上面，散热体内部放置控制器、散热体顶部放置铝基板，铝基板上放置多颗多色温的高光效 LED 芯片。

[0005] 上述接口采用螺旋式、直插式、挤压式。

[0006] 上述多颗多色温的高光效 LED 芯片分为两条链路分别由色温选择开关控制，一条是由暖白色 LED 灯串联组成，一条是由冷白色 LED 灯串联或并联组成。

[0007] 上述玻璃外壳的表面有凹凸。

[0008] 上述控制器的主控电路包括整流滤波电路、电源管理芯片、变压器和开关三极管，其中，前端整流滤波电路的输出端与变压器的初级连接，变压器初级的输出端与开关三极管的集电极连接、开关三极管的基极与电源管理芯片的输入端口连接、电源管理芯片的输出信号经过变压产生高频脉冲交流，并经变压器次级整流滤波后输出稳定的直流电压。

[0009] 本实用新型具有如下的优点和积极效果：

[0010] 1、通过散热体用来驱散 LED 灯珠铝基板封装所散发出的热量，从而延长了整个 LED 球泡灯的使用寿命。

[0011] 2、通过控制器来控制和保证整个电路的正常运行，从而可保证节能灯工作的稳定性和安全性。

[0012] 3、玻璃外壳的表面凹凸不平，可以有效的防止眩光。

附图说明：

[0013] 图 1 是本实用新型的外观图。

[0014] 图 2 是本实用新型的内部结构示意图。

[0015] 图 3 是图 2 的 A-A 剖面图。

[0016] 图 4 是控制器的电原理图。

Luminex v. Signify
Luminex Exhibit 1021
Page 186

具体实施方式：

[0017] 如图 1、2、3 所示：一种发光二极管可控色温室内节能灯，由玻璃外壳 1、色温选择开关 2、控制器 3、接口 4、铝制散热体 5 和 LED 光源 6 组成。接口 4 位于可控色温 LED 节能灯的最底部，可选用螺旋式、直插式、挤压式等多种方式，用来与外部接口中的电极相连接通电。铝制散热体 5 采用金属材质铝压铸制成，通过塑料连接件 7 与接口 4 连接，色温选择开关 2 嵌入于铝制散热体 5 的上面，铝制散热体 5 内部放置控制器 3、铝制散热体 5 顶部放置铝基板 8，六颗不同色温的多颗高光效 LED 芯片（发光二极管）位于铝基板 8 的上面，铝基板 8 热传导快，具有很好的散热效果。上述六颗多色温的高光效 LED 芯片分为两条链路分别由色温选择开关控制，一条是由暖白色 LED 灯串联组成，一条是由冷白色 LED 灯串联或并联组成。

[0018] 上述铝制散热体 5 用来驱散 LED 灯珠铝基板 8 所散发出的热量，保证整个 LED 球泡灯的使用寿命。控制器 3 用来控制和保证整个电路的正常运行。玻璃外壳 1 位于铝制散热体 5 的上面，用来保护发光装置并把发出的可见光散发出去，玻璃外壳 1 的模具在加工的时候，对玻璃外壳 1 的塑料模具采用高速铣加工，使玻璃外壳 1 光滑的表面变得不光滑有凹凸感，可以有效的防止眩光。导线 9 位于灯具的里面，用来把各种器件有序的连接起来，保证 LED 球泡灯接通电源后，可以正常的工作。

[0019] 如图 4 所示，本实用新型控制器的主控电路通过对不同色温的 LED 选择性通断，得到不同的色温值，采用电源管理芯片实现的恒流控制电路，其产生相应的电流值特别适用于驱动 LED 灯。本发明主控电路围绕电源管理芯片进行设计，其通过前端整流滤波、送往变压器初级，经开关三极管、电源管理芯片、变压等的开关导通，产生高频脉冲交流，经变压器次级整流滤波后输出稳定的直流电压。

Luminex v. Signify
Luminex Exhibit 1021
Page 187

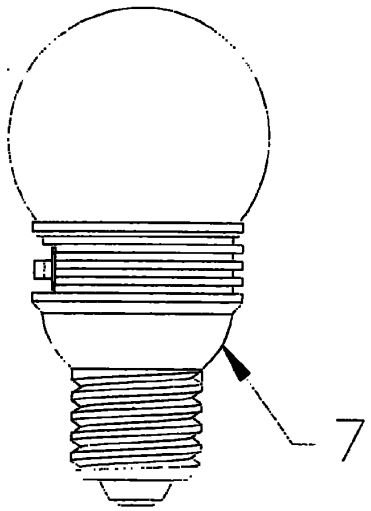

图 1

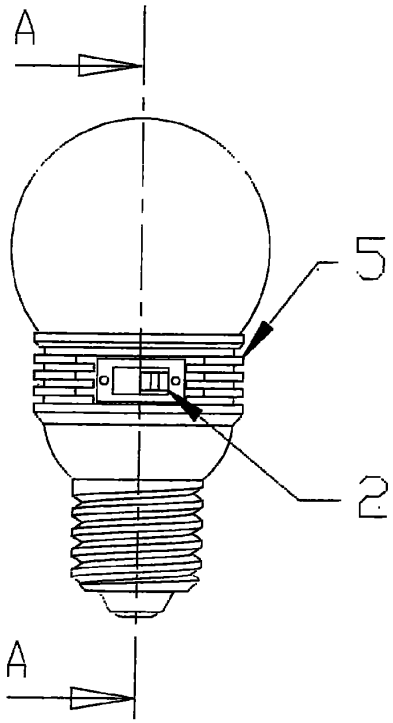

图 2

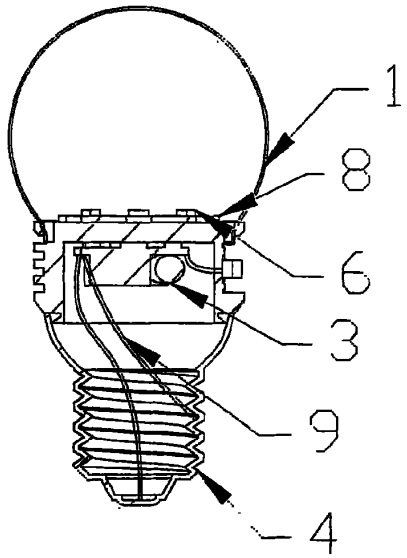

图 3

Luminex v. Signify
Luminex Exhibit 1021
Page 188

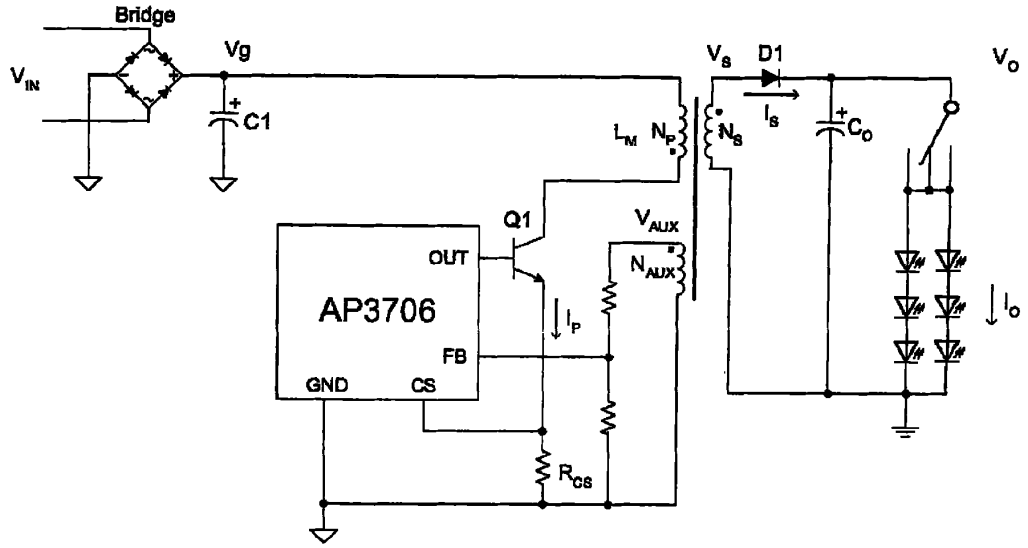

图 4

Luminex v. Signify
Luminex Exhibit 1021
Page 189

UNITED STATES PATENT AND TRADEMARK OFFICE

UNITED STATES DEPARTMENT OF COMMERCE
United States Patent and Trademark Office
Address: COMMISSIONER FOR PATENTS
P.O. Box 1450
Alexandria, Virginia 22313-1450
www.uspto.gov

APPLICATION NO.	FILING DATE	FIRST NAMED INVENTOR	ATTORNEY DOCKET NO.	CONFIRMATION NO.
15/811,062	11/13/2017	Steven Walter Pyshos	13682.227107	1254

91764 7590 01/22/2019
King & Spalding LLP (Eaton/Cooper)
ATTN: IP Docketing Department
1100 Louisiana Street, Suite 4000
Houston, TX 77002-5213

EXAMINER
VU, JIMMY T

ART UNIT	PAPER NUMBER
2844	

NOTIFICATION DATE	DELIVERY MODE
01/22/2019	ELECTRONIC

Please find below and/or attached an Office communication concerning this application or proceeding.

The time period for reply, if any, is set in the attached communication.

Notice of the Office communication was sent electronically on above-indicated "Notification Date" to the following e-mail address(es):

houpatentdocket@kslaw.com
nduby@kslaw.com

PTOL-90A (Rev. 04/07)

UNITED STATES DEPARTMENT OF COMMERCE
U.S. Patent and Trademark Office
Address: COMMISSIONER FOR PATENTS
P.O. Box 1450
Alexandria, Virginia 22313-1450

APPLICATION NO./ CONTROL NO.	FILING DATE	FIRST NAMED INVENTOR/ PATENT IN REEXAMINATION	ATTORNEY DOCKET NO.
15/811,062	11/13/2017	Pyshos et al.	13682.227107

		EXAMINER	
King & Spalding LLP (Eaton/Cooper) ATTN: IP Docketing Department 1100 Louisiana Street, Suite 4000 Houston, TX 77002-5213		JIMMY T VU	
		ART UNIT	PAPER
		2844	20190115

DATE MAILED: _____

Please find below and/or attached an Office communication concerning this application or proceeding.

Commissioner for Patents

The references cited in the Information Disclosure Statement (IDS) filed 01/08/2019 have been considered by the examiner. /JV/

/JIMMY T VU/
Primary Examiner, Art Unit 2844

PTO-90C (Rev.04-03)

PTO/SB/08A (08-03)
Approved for use through 07/31/2006. OMB 0651-0031
U.S. Patent and Trademark Office: U.S. DEPARTMENT OF COMMERCE
Under the Paperwork Reduction Act of 1995 no persons are required to respond to a collection of information unless it contains a valid OMB control number.

Substitute for form 1449A/PTO

INFORMATION DISCLOSURE STATEMENT BY APPLICANT

(use as many sheets as necessary)

Sheet	1	of	1

Complete if Known	
Application Number	**15/811,062**
Filing Date	**11-13-2017**
First Named Inventor	**Steven Walter Pyshos**
Group Art Unit	**2844**
Examiner Name	**Jimmy T. Vu**
Attorney Docket Number	**13682.227107**

U.S. PATENT DOCUMENTS

Examiner Initials *	Cite No. [1]	U.S. Patent Document Number	Kind Code (if known)	Name of Patentee or Applicant of Cited Document	Date of Publication of Cited Document MM-DD- YYYY	Pages Columns Lines Where Relevant Passages or Relevant Figures Appear
	1.	20100237798		Wolf	09-23-2010	

FOREIGN PATENT DOCUMENTS

Examiner Initials *	Cite No. [1]	Foreign Patent Document Office[3]	Number	Kind Code[2] (if known)	Name of Patentee or Applicant of Cited Document	Date of Publication of Cited Document MM-DD- YYYY	Pages Columns Lines Where Relevant Passages or Relevant Figures Appear	T [6]

OTHER PRIOR ART – NON PATENT LITERATURE DOCUMENTS

Examiner Initials *	Cite No. [1]	Include name of the author (in CAPITAL LETTERS) title of the article (when appropriate) title of the item (book magazine journal serial symposium catalog etc.) date page(s) volume-issue number(s) publisher city and/or country where published.	T [6]

Examiner Signature	/JIMMY T VU/	Date Considered	01/15/2019

*EXAMINER: Initial if reference considered whether or not citation is in conformance with MPEP 609. Draw line through citation if not in conformance and not considered. Include copy of this form with next communication to applicant.

[1] Unique citation designation number. [2] See attached Kinds of U.S. Patent Documents. [3] Enter Office that issued the document by the two-letter code (WIPO Standard ST.3). [4] For Japanese patent documents the indication of the year of the reign of the Emperor must precede the serial number of the patent document. [5] Kind of document by the appropriate symbols as indicated on the document under WIPO Standard ST. 16 if possible. [6] Applicant is to place a check mark here if English language Translation is attached.

Burden Hour Statement: This form is estimated to take 2.0 hours to complete. Time will vary depending upon the needs of the individual case. Any comments on the amount of time you are required to complete this form should be sent to the Chief Information Officer U. S. Patent and Trademark Office Washington DC 20231. DO NOT SEND FEES OR COMPLETED FORMS TO THIS ADDRESS. SEND TO: Assistant Commissioner for Patents Washington DC 20231.
DMSLIBRARY01\33475041.v2

ALL REFERENCES CONSIDERED EXCEPT WHERE LINED THROUGH. /J.T.V/

UNITED STATES PATENT AND TRADEMARK OFFICE

UNITED STATES DEPARTMENT OF COMMERCE
United States Patent and Trademark Office
Address: COMMISSIONER FOR PATENTS
P.O. Box 1450
Alexandria, Virginia 22313-1450
www.uspto.gov

NOTICE OF ALLOWANCE AND FEE(S) DUE

91764 7590 02/13/2019
King & Spalding LLP (Eaton/Cooper)
ATTN: IP Docketing Department
1100 Louisiana Street, Suite 4000
Houston, TX 77002-5213

EXAMINER
VU, JIMMY T

ART UNIT	PAPER NUMBER
2844	

DATE MAILED: 02/13/2019

APPLICATION NO.	FILING DATE	FIRST NAMED INVENTOR	ATTORNEY DOCKET NO.	CONFIRMATION NO.
15/811,062	11/13/2017	Steven Walter Pyshos	13682.227107	1254

TITLE OF INVENTION: CONFIGURABLE LIGHTING SYSTEM

APPLN. TYPE	ENTITY STATUS	ISSUE FEE DUE	PUBLICATION FEE DUE	PREV. PAID ISSUE FEE	TOTAL FEE(S) DUE	DATE DUE
nonprovisional	UNDISCOUNTED	$1000	$0.00	$0.00	$1000	05/13/2019

THE APPLICATION IDENTIFIED ABOVE HAS BEEN EXAMINED AND IS ALLOWED FOR ISSUANCE AS A PATENT. PROSECUTION ON THE MERITS IS CLOSED. THIS NOTICE OF ALLOWANCE IS NOT A GRANT OF PATENT RIGHTS. THIS APPLICATION IS SUBJECT TO WITHDRAWAL FROM ISSUE AT THE INITIATIVE OF THE OFFICE OR UPON PETITION BY THE APPLICANT. SEE 37 CFR 1.313 AND MPEP 1308.

THE ISSUE FEE AND PUBLICATION FEE (IF REQUIRED) MUST BE PAID WITHIN THREE MONTHS FROM THE MAILING DATE OF THIS NOTICE OR THIS APPLICATION SHALL BE REGARDED AS ABANDONED. THIS STATUTORY PERIOD CANNOT BE EXTENDED. SEE 35 U.S.C. 151. THE ISSUE FEE DUE INDICATED ABOVE DOES NOT REFLECT A CREDIT FOR ANY PREVIOUSLY PAID ISSUE FEE IN THIS APPLICATION. IF AN ISSUE FEE HAS PREVIOUSLY BEEN PAID IN THIS APPLICATION (AS SHOWN ABOVE), THE RETURN OF PART B OF THIS FORM WILL BE CONSIDERED A REQUEST TO REAPPLY THE PREVIOUSLY PAID ISSUE FEE TOWARD THE ISSUE FEE NOW DUE.

HOW TO REPLY TO THIS NOTICE:

I. Review the ENTITY STATUS shown above. If the ENTITY STATUS is shown as SMALL or MICRO, verify whether entitlement to that entity status still applies.

If the ENTITY STATUS is the same as shown above, pay the TOTAL FEE(S) DUE shown above.

If the ENTITY STATUS is changed from that shown above, on PART B - FEE(S) TRANSMITTAL, complete section number 5 titled "Change in Entity Status (from status indicated above)".

For purposes of this notice, small entity fees are 1/2 the amount of undiscounted fees, and micro entity fees are 1/2 the amount of small entity fees.

II. PART B - FEE(S) TRANSMITTAL, or its equivalent, must be completed and returned to the United States Patent and Trademark Office (USPTO) with your ISSUE FEE and PUBLICATION FEE (if required). If you are charging the fee(s) to your deposit account, section "4b" of Part B - Fee(s) Transmittal should be completed and an extra copy of the form should be submitted. If an equivalent of Part B is filed, a request to reapply a previously paid issue fee must be clearly made, and delays in processing may occur due to the difficulty in recognizing the paper as an equivalent of Part B.

III. All communications regarding this application must give the application number. Please direct all communications prior to issuance to Mail Stop ISSUE FEE unless advised to the contrary.

IMPORTANT REMINDER: Maintenance fees are due in utility patents issuing on applications filed on or after Dec. 12, 1980. It is patentee's responsibility to ensure timely payment of maintenance fees when due. More information is available at www.uspto.gov/PatentMaintenanceFees.

PTOL-85 (Rev. 02/11)

Luminex v. Signify
Luminex Exhibit 1021
Page 193

PART B - FEE(S) TRANSMITTAL

Complete and send this form, together with applicable fee(s), by mail or fax, or via EFS-Web.

By mail, send to: Mail Stop ISSUE FEE
Commissioner for Patents
P.O. Box 1450
Alexandria, Virginia 22313-1450

By fax, send to: (571)-273-2885

INSTRUCTIONS: This form should be used for transmitting the ISSUE FEE and PUBLICATION FEE (if required). Blocks 1 through 5 should be completed where appropriate. All further correspondence including the Patent, advance orders and notification of maintenance fees will be mailed to the current correspondence address as indicated unless corrected below or directed otherwise in Block 1, by (a) specifying a new correspondence address; and/or (b) indicating a separate "FEE ADDRESS" for maintenance fee notifications.

CURRENT CORRESPONDENCE ADDRESS (Note: Use Block 1 for any change of address)

91764 7590 02/13/2019
King & Spalding LLP (Eaton/Cooper)
ATTN: IP Docketing Department
1100 Louisiana Street, Suite 4000
Houston, TX 77002-5213

Note: A certificate of mailing can only be used for domestic mailings of the Fee(s) Transmittal. This certificate cannot be used for any other accompanying papers. Each additional paper, such as an assignment or formal drawing, must have its own certificate of mailing or transmission.

Certificate of Mailing or Transmission

I hereby certify that this Fee(s) Transmittal is being deposited with the United States Postal Service with sufficient postage for first class mail in an envelope addressed to the Mail Stop ISSUE FEE address above, or being transmitted to the USPTO via EFS-Web or by facsimile to (571) 273-2885, on the date below.

(Typed or printed name)

(Signature)

(Date)

APPLICATION NO.	FILING DATE	FIRST NAMED INVENTOR	ATTORNEY DOCKET NO.	CONFIRMATION NO.
15/811,062	11/13/2017	Steven Walter Pyshos	13682.227107	1254

TITLE OF INVENTION: CONFIGURABLE LIGHTING SYSTEM

APPLN. TYPE	ENTITY STATUS	ISSUE FEE DUE	PUBLICATION FEE DUE	PREV. PAID ISSUE FEE	TOTAL FEE(S) DUE	DATE DUE
nonprovisional	UNDISCOUNTED	$1000	$0.00	$0.00	$1000	05/13/2019

EXAMINER	ART UNIT	CLASS-SUBCLASS
VU, JIMMY T	2844	315-294000

1. Change of correspondence address or indication of "Fee Address" (37 CFR 1.363).

❑ Change of correspondence address (or Change of Correspondence Address form PTO/SB/122) attached.

❑ "Fee Address" indication (or "Fee Address" Indication form PTO/SB/47; Rev 03-09 or more recent) attached. **Use of a Customer Number is required.**

2. For printing on the patent front page, list
(1) The names of up to 3 registered patent attorneys or agents OR, alternatively,
(2) The name of a single firm (having as a member a registered attorney or agent) and the names of up to 2 registered patent attorneys or agents. If no name is listed, no name will be printed.

1_____
2_____
3_____

3. ASSIGNEE NAME AND RESIDENCE DATA TO BE PRINTED ON THE PATENT (print or type)

PLEASE NOTE: Unless an assignee is identified below, no assignee data will appear on the patent. If an assignee is identified below, the document must have been previously recorded, or filed for recordation, as set forth in 37 CFR 3.11 and 37 CFR 3.81(a). Completion of this form is NOT a substitute for filing an assignment.

(A) NAME OF ASSIGNEE (B) RESIDENCE: (CITY and STATE OR COUNTRY)

Please check the appropriate assignee category or categories (will not be printed on the patent) : ❑ Individual ❑ Corporation or other private group entity ❑ Government

4a. Fees submitted: ❑Issue Fee ❑Publication Fee (if required) ❑Advance Order - # of Copies _____

4b. Method of Payment: *(Please first reapply any previously paid fee shown above)*

❑ Electronic Payment via EFS-Web ❑ Enclosed check ❑ Non-electronic payment by credit card (Attach form PTO-2038)

❑ The Director is hereby authorized to charge the required fee(s), any deficiency, or credit any overpayment to Deposit Account No. _____

5. **Change in Entity Status** (from status indicated above)

❑ Applicant certifying micro entity status. See 37 CFR 1.29

❑ Applicant asserting small entity status. See 37 CFR 1.27

❑ Applicant changing to regular undiscounted fee status.

NOTE: Absent a valid certification of Micro Entity Status (see forms PTO/SB/15A and 15B), issue fee payment in the micro entity amount will not be accepted at the risk of application abandonment.
NOTE: If the application was previously under micro entity status, checking this box will be taken to be a notification of loss of entitlement to micro entity status.
NOTE: Checking this box will be taken to be a notification of loss of entitlement to small or micro entity status, as applicable.

NOTE: This form must be signed in accordance with 37 CFR 1.31 and 1.33. See 37 CFR 1.4 for signature requirements and certifications.

Authorized Signature _____ Date _____

Typed or printed name _____ Registration No. _____

Luminex v. Signify
Luminex Exhibit 1021
Page 194

UNITED STATES PATENT AND TRADEMARK OFFICE

UNITED STATES DEPARTMENT OF COMMERCE
United States Patent and Trademark Office
Address: COMMISSIONER FOR PATENTS
P.O. Box 1450
Alexandria, Virginia 22313-1450
www.uspto.gov

APPLICATION NO.	FILING DATE	FIRST NAMED INVENTOR	ATTORNEY DOCKET NO.	CONFIRMATION NO.
15/811,062	11/13/2017	Steven Walter Pyshos	13682.227107	1254

91764 7590 02/13/2019
King & Spalding LLP (Eaton/Cooper)
ATTN: IP Docketing Department
1100 Louisiana Street, Suite 4000
Houston, TX 77002-5213

EXAMINER
VU, JIMMY T

ART UNIT	PAPER NUMBER
2844	

DATE MAILED: 02/13/2019

Determination of Patent Term Adjustment under 35 U.S.C. 154 (b)
(Applications filed on or after May 29, 2000)

The Office has discontinued providing a Patent Term Adjustment (PTA) calculation with the Notice of Allowance.

Section 1(h)(2) of the AIA Technical Corrections Act amended 35 U.S.C. 154(b)(3)(B)(i) to eliminate the requirement that the Office provide a patent term adjustment determination with the notice of allowance. See Revisions to Patent Term Adjustment, 78 Fed. Reg. 19416, 19417 (Apr. 1, 2013). Therefore, the Office is no longer providing an initial patent term adjustment determination with the notice of allowance. The Office will continue to provide a patent term adjustment determination with the Issue Notification Letter that is mailed to applicant approximately three weeks prior to the issue date of the patent, and will include the patent term adjustment on the patent. Any request for reconsideration of the patent term adjustment determination (or reinstatement of patent term adjustment) should follow the process outlined in 37 CFR 1.705.

Any questions regarding the Patent Term Extension or Adjustment determination should be directed to the Office of Patent Legal Administration at (571)-272-7702. Questions relating to issue and publication fee payments should be directed to the Customer Service Center of the Office of Patent Publication at 1-(888)-786-0101 or (571)-272-4200.

PTOL-85 (Rev. 02/11)

OMB Clearance and PRA Burden Statement for PTOL-85 Part B

The Paperwork Reduction Act (PRA) of 1995 requires Federal agencies to obtain Office of Management and Budget approval before requesting most types of information from the public. When OMB approves an agency request to collect information from the public, OMB (i) provides a valid OMB Control Number and expiration date for the agency to display on the instrument that will be used to collect the information and (ii) requires the agency to inform the public about the OMB Control Number's legal significance in accordance with 5 CFR 1320.5(b).

The information collected by PTOL-85 Part B is required by 37 CFR 1.311. The information is required to obtain or retain a benefit by the public which is to file (and by the USPTO to process) an application. Confidentiality is governed by 35 U.S.C. 122 and 37 CFR 1.14. This collection is estimated to take 30 minutes to complete, including gathering, preparing, and submitting the completed application form to the USPTO. Time will vary depending upon the individual case. Any comments on the amount of time you require to complete this form and/or suggestions for reducing this burden, should be sent to the Chief Information Officer, U.S. Patent and Trademark Office, U.S. Department of Commerce, P.O. Box 1450, Alexandria, Virginia 22313-1450. DO NOT SEND FEES OR COMPLETED FORMS TO THIS ADDRESS. SEND TO: Commissioner for Patents, P.O. Box 1450, Alexandria, Virginia 22313-1450. Under the Paperwork Reduction Act of 1995, no persons are required to respond to a collection of information unless it displays a valid OMB control number.

Privacy Act Statement

The Privacy Act of 1974 (P.L. 93-579) requires that you be given certain information in connection with your submission of the attached form related to a patent application or patent. Accordingly, pursuant to the requirements of the Act, please be advised that: (1) the general authority for the collection of this information is 35 U.S.C. 2(b)(2); (2) furnishing of the information solicited is voluntary; and (3) the principal purpose for which the information is used by the U.S. Patent and Trademark Office is to process and/or examine your submission related to a patent application or patent. If you do not furnish the requested information, the U.S. Patent and Trademark Office may not be able to process and/or examine your submission, which may result in termination of proceedings or abandonment of the application or expiration of the patent.

The information provided by you in this form will be subject to the following routine uses:

1. The information on this form will be treated confidentially to the extent allowed under the Freedom of Information Act (5 U.S.C. 552) and the Privacy Act (5 U.S.C 552a). Records from this system of records may be disclosed to the Department of Justice to determine whether disclosure of these records is required by the Freedom of Information Act.
2. A record from this system of records may be disclosed, as a routine use, in the course of presenting evidence to a court, magistrate, or administrative tribunal, including disclosures to opposing counsel in the course of settlement negotiations.
3. A record in this system of records may be disclosed, as a routine use, to a Member of Congress submitting a request involving an individual, to whom the record pertains, when the individual has requested assistance from the Member with respect to the subject matter of the record.
4. A record in this system of records may be disclosed, as a routine use, to a contractor of the Agency having need for the information in order to perform a contract. Recipients of information shall be required to comply with the requirements of the Privacy Act of 1974, as amended, pursuant to 5 U.S.C. 552a(m).
5. A record related to an International Application filed under the Patent Cooperation Treaty in this system of records may be disclosed, as a routine use, to the International Bureau of the World Intellectual Property Organization, pursuant to the Patent Cooperation Treaty.
6. A record in this system of records may be disclosed, as a routine use, to another federal agency for purposes of National Security review (35 U.S.C. 181) and for review pursuant to the Atomic Energy Act (42 U.S.C. 218(c)).
7. A record from this system of records may be disclosed, as a routine use, to the Administrator, General Services, or his/her designee, during an inspection of records conducted by GSA as part of that agency's responsibility to recommend improvements in records management practices and programs, under authority of 44 U.S.C. 2904 and 2906. Such disclosure shall be made in accordance with the GSA regulations governing inspection of records for this purpose, and any other relevant (i.e., GSA or Commerce) directive. Such disclosure shall not be used to make determinations about individuals.
8. A record from this system of records may be disclosed, as a routine use, to the public after either publication of the application pursuant to 35 U.S.C. 122(b) or issuance of a patent pursuant to 35 U.S.C. 151. Further, a record may be disclosed, subject to the limitations of 37 CFR 1.14, as a routine use, to the public if the record was filed in an application which became abandoned or in which the proceedings were terminated and which application is referenced by either a published application, an application open to public inspection or an issued patent.
9. A record from this system of records may be disclosed, as a routine use, to a Federal, State, or local law enforcement agency, if the USPTO becomes aware of a violation or potential violation of law or regulation.

Notice of Allowability	Application No. 15/811,062	Applicant(s) Pyshos et al.	
	Examiner JIMMY T VU	Art Unit 2844	AIA Status Yes

-- The MAILING DATE of this communication appears on the cover sheet with the correspondence address--

All claims being allowable, PROSECUTION ON THE MERITS IS (OR REMAINS) CLOSED in this application. If not included herewith (or previously mailed), a Notice of Allowance (PTOL-85) or other appropriate communication will be mailed in due course. **THIS NOTICE OF ALLOWABILITY IS NOT A GRANT OF PATENT RIGHTS.** This application is subject to withdrawal from issue at the initiative of the Office or upon petition by the applicant. See 37 CFR 1.313 and MPEP 1308.

1. ☑ This communication is responsive to RCE filed on 01/16/2019.
   ☐ A declaration(s)/affidavit(s) under **37 CFR 1.130(b)** was/were filed on _____.

2. ☐ An election was made by the applicant in response to a restriction requirement set forth during the interview on _____; the restriction requirement and election have been incorporated into this action.

3. ☑ The allowed claim(s) is/are 1-20 . As a result of the allowed claim(s), you may be eligible to benefit from the **Patent Prosecution Highway** program at a participating intellectual property office for the corresponding application. For more information, please see **http://www.uspto.gov/patents/init_events/pph/index.jsp** or send an inquiry to **PPHfeedback@uspto.gov.**

4. ☐ Acknowledgment is made of a claim for foreign priority under 35 U.S.C. § 119(a)-(d) or (f).

   Certified copies:

   a) ☐All b) ☐ Some *c) ☐ None of the:

   1. ☐ Certified copies of the priority documents have been received.
   2. ☐ Certified copies of the priority documents have been received in Application No. _____ .
   3. ☐ Copies of the certified copies of the priority documents have been received in this national stage application from the International Bureau (PCT Rule 17.2(a)).

   * Certified copies not received: _____ .

Applicant has THREE MONTHS FROM THE "MAILING DATE" of this communication to file areply complying with the requirements noted below. Failure to timely comply will result in ABANDONMENT of this application.
THIS THREE-MONTH PERIOD IS NOT EXTENDABLE.

5. ☐ CORRECTED DRAWINGS (as "replacement sheets") must be submitted.
   ☐ including changes required by the attached Examiner's Amendment / Comment or in the Office action of Paper No./Mail Date _____ .

   Identifying indicia such as the application number (see 37 CFR 1.84(c)) should be written on the drawings in the front (not the back) of each sheet. Replacement sheet(s) should be labeled as such in the header according to 37 CFR 1.121(d).

6. ☐ DEPOSIT OF and/or INFORMATION about the deposit of BIOLOGICAL MATERIAL must be submitted. Note the attached Examiner's comment regarding REQUIREMENT FOR THE DEPOSIT OF BIOLOGICAL MATERIAL.

Attachment(s)

1. ☐ Notice of References Cited (PTO-892)
2. ☑ Information Disclosure Statements (PTO/SB/08), Paper No./Mail Date 1/16/19.
3. ☐ Examiner's Comment Regarding Requirement for Deposit of Biological Material _____.
4. ☐ Interview Summary (PTO-413), Paper No./Mail Date. _____.
5. ☐ Examiner's Amendment/Comment
6. ☐ Examiner's Statement of Reasons for Allowance
7. ☐ Other _____.

/JIMMY T VU/
Primary Examiner, Art Unit 2844

Luminex v. Signify
Luminex Exhibit 1021
Page 197

Search Notes	Application/Control No.	Applicant(s)/Patent Under Reexamination
	15/811,062	Pyshos et al.
	Examiner	**Art Unit**
	JIMMY T VU	2844

CPC - Searched*		
Symbol	**Date**	**Examiner**
H05B37/02|H05B33/08|H05B33/0845|H05B33/0863|F21K9/62|F21S8/026|F21V3/02|F21V5/04|F21V7/00|F21V17/12|F21V21/088|F21V23/001|F21Y2113/13|F21Y2115/10	4/2/18	JV

CPC Combination Sets - Searched*		
Symbol	**Date**	**Examiner**

US Classification - Searched*			
Class	**Subclass**	**Date**	**Examiner**
315	151,185R,209R,291,294,307,308,312	3/31/18	JV

* See search history printout included with this form or the SEARCH NOTES box below to determine the scope of the search.

Search Notes		
Search Notes	**Date**	**Examiner**
Class/subclass, CPC, Text, Assignment data, Inventor name, &Back/Forward search (EAST)	3/31/18	JV
considered IDS	3/31/18	JV
updated search	4/2/18	JV
updated search	10/1/18	JV
considered IDS	02/04/2019	JV
updated search	02/04/2019	JV

Luminex v. Signify
Luminex Exhibit 1021
Page 198

Search Notes	Application/Control No.	Applicant(s)/Patent Under Reexamination
	15/811,062	Pyshos et al.
	Examiner	**Art Unit**
	JIMMY T VU	2844

Interference Search			
US Class/CPC Symbol	**US Subclass/CPC Group**	**Date**	**Examiner**
315	294	10/1/18	JV
USPAT, US-PGPUB	see interference search	10/1/18	JV
H05B	33/08	02/04/2019	JV

Luminex v. Signify
Luminex Exhibit 1021
Page 199

Issue Classification	Application/Control No.	Applicant(s)/Patent Under Reexamination
	15/811,062	Pyshos et al.
	Examiner	**Art Unit**
	JIMMY T VU	2844

CPC

Symbol					Type	Version
H05B	/	33	/	0863	F	2013-01-01
F21K	/	9	/	62	I	2016-08-01
F21S	/	8	/	026	I	2013-01-01
F21V	/	3	/	02	I	2013-01-01
F21V	/	5	/	04	I	2013-01-01
F21V	/	17	/	12	I	2013-01-01
F21V	/	21	/	088	I	2013-01-01
F21V	/	23	/	001	I	2013-01-01
H05B	/	33	/	0845	I	2013-01-01
F21V	/	7	/	00	I	2013-01-01
H05B	/	33	/	086	I	2013-01-01
F21Y	/	2115	/	10	A	2016-08-01
F21Y	/	2113	/	13	A	2016-08-01
F21V	/	21	/	049	A	2013-01-01

CPC Combination Sets

Symbol					Type	Set	Ranking	Version
	/		/					

NONE (Assistant Examiner)	(Date)	**Total Claims Allowed:** 20	
/JIMMY T VU/ Primary Examiner, Art Unit 2844 (Primary Examiner)	04 February 2019 (Date)	O.G. Print Claim(s) 1	O.G. Print Figure 2

U.S. Patent and Trademark Office — Part of Paper No.: 20190204

Luminex v. Signify
Luminex Exhibit 1021
Page 200

Issue Classification	Application/Control No.	Applicant(s)/Patent Under Reexamination
	15/811,062	Pyshos et al.
	Examiner	**Art Unit**
	JIMMY T VU	2844

INTERNATIONAL CLASSIFICATION				
CLAIMED				
H05B	/	33	/	08

NON-CLAIMED				
	/		/	

US ORIGINAL CLASSIFICATION	
CLASS	**SUBCLASS**
315	294

CROSS REFERENCES(S)						
CLASS	**SUBCLASS (ONE SUBCLASS PER BLOCK)**					

NONE		Total Claims Allowed:	
(Assistant Examiner)	(Date)	20	
/JIMMY T VU/ Primary Examiner, Art Unit 2844	04 February 2019	O.G. Print Claim(s)	O.G. Print Figure
(Primary Examiner)	(Date)	1	2

U.S. Patent and Trademark Office

Part of Paper No.: 20190204

Luminex v. Signify
Luminex Exhibit 1021
Page 201

Issue Classification	Application/Control No.	Applicant(s)/Patent Under Reexamination
	15/811,062	Pyshos et al.
	Examiner	**Art Unit**
	JIMMY T VU	2844

☑ Claims renumbered in the same order as presented by applicant ☐ CPA ☐ T.D. ☐ R.1.47

CLAIMS

Final	Original	Final	Original	Final	Original	Final	Original	Final	Original	Final	Original	Final	Original	Final	Original
	1		10		19										
	2		11		20										
	3		12												
	4		13												
	5		14												
	6		15												
	7		16												
	8		17												
	9		18												

NONE		Total Claims Allowed:	
(Assistant Examiner)	(Date)	20	
/JIMMY T VU/ Primary Examiner, Art Unit 2844	04 February 2019	O.G. Print Claim(s)	O.G. Print Figure
(Primary Examiner)	(Date)	1	2

U.S. Patent and Trademark Office Part of Paper No.: 20190204

Luminex v. Signify
Luminex Exhibit 1021
Page 202

Index of Claims	Application/Control No.	Applicant(s)/Patent Under Reexamination
	15/811,062	Pyshos et al.
	Examiner	**Art Unit**
	JIMMY T VU	2844

✓	Rejected	-	Cancelled	N	Non-Elected	A	Appeal
=	Allowed	÷	Restricted	I	Interference	O	Objected

CLAIMS

☑ Claims renumbered in the same order as presented by applicant ☐ CPA ☐ T.D. ☐ R.1.47

CLAIM		DATE								
Final	Original	02/04/2019								
	1	=								
	2	=								
	3	=								
	4	=								
	5	=								
	6	=								
	7	=								
	8	=								
	9	=								
	10	=								
	11	=								
	12	=								
	13	=								
	14	=								
	15	=								
	16	=								
	17	=								
	18	=								
	19	=								
	20	=								

Luminex v. Signify
Luminex Exhibit 1021
Page 203

EAST Search History (Prior Art)

Ref #	Hits	Search Query	DBs	Default Operator	Plurals	Time Stamp
L1	3	"8947013".pn.	US-PGPUB; USPAT; USOCR; FPRS; EPO; JPO; DERWENT; IBM_TDB	OR	ON	2019/02/04 09:57
L2	24	("20130328503"|"8872438"|"10091855"|"7416312"|"9820350"|"7926300"|"20100237798").PN.	US-PGPUB; USPAT; USOCR; FPRS; EPO; JPO; DERWENT; IBM_TDB	OR	ON	2019/02/04 10:00
L3	11	("20080252197" | "20090096388" | "20090195191" | "20110285321" | "20120146519" | "20130154489" | "20130154510" | "20130200800" | "20140159596" | "8729812").PN. OR ("8947013").URPN.	US-PGPUB; USPAT; USOCR	OR	OFF	2019/02/04 10:45

EAST Search History (Interference)

		<This search history is empty>				

PTO/SB/08A (08-03)
Approved for use through 07/31/2006. OMB 0651-0031
U.S. Patent and Trademark Office: U.S. DEPARTMENT OF COMMERCE
Under the Paperwork Reduction Act of 1995 no persons are required to respond to a collection of information unless it contains a valid OMB control number.

Substitute for form 1449A/PTO

INFORMATION DISCLOSURE STATEMENT BY APPLICANT

(use as many sheets as necessary)

Sheet	1	of	1

Complete if Known	
Application Number	**15/811062**
Filing Date	**11-13-2017**
First Named Inventor	**Steven Walter Pyshos**
Group Art Unit	**2844**
Examiner Name	**Jimmy T. Vu**
Attorney Docket Number	**13682.227107**

U.S. PATENT DOCUMENTS

Examiner Initials *	Cite No. [1]	U.S. Patent Document Number	Kind Code (if known)	Name of Patentee or Applicant of Cited Document	Date of Publication of Cited Document MM-DD- YYYY	Pages Columns Lines Where Relevant Passages or Relevant Figures Appear
	1.	2013/0114241		Antony Paul Van de Ven. et al.	05-09-2013	
	2.	8947013		Sehat Sutardja et al.	02-03-2015	
	3.	9144129		David Munday et al.	09-22-2015	
	4.	9072148		Kenichiro Tanaka et al.	06-30-2015	
	5.	2008/0060917		Chen Chia-Li et al.	03-13-2008	
	6.	6149283		Kathryn M. Conway et al.	11-21-2000	
	7.	6127783		Michael D. Pashley et al.	10-03-2000	

FOREIGN PATENT DOCUMENTS

Examiner Initials *	Cite No. [1]	Foreign Patent Document Office[3]	Number	Kind Code[2] (if known)	Name of Patentee or Applicant of Cited Document	Date of Publication of Cited Document MM-DD- YYYY	Pages Columns Lines Where Relevant Passages or Relevant Figures Appear	T [6]
	8.	CN	201844227		Tianjin Star Sea Electronics Technology Co LTD.	05-25-2011		

OTHER PRIOR ART – NON PATENT LITERATURE DOCUMENTS

Examiner Initials *	Cite No. [1]	Include name of the author (in CAPITAL LETTERS) title of the article (when appropriate) title of the item (book magazine journal serial symposium catalog etc.) date page(s) volume-issue number(s) publisher city and/or country where published.	T [6]
	9	International Search Report for PCT/US2018/047718, mailed November 29, 2018.	

Examiner Signature	/JIMMY T VU/	Date Considered	02/04/2019

*EXAMINER: Initial if reference considered whether or not citation is in conformance with MPEP 609. Draw line through citation if not in conformance and not considered. Include copy of this form with next communication to applicant.

[1] Unique citation designation number. [2] See attached Kinds of U.S. Patent Documents. [3] Enter Office that issued the document by the two-letter code (WIPO Standard ST.3). [4] For Japanese patent documents the indication of the year of the reign of the Emperor must precede the serial number of the patent document. [5] Kind of document by the appropriate symbols as indicated on the document under WIPO Standard ST. 16 if possible. [6] Applicant is to place a check mark here if English language Translation is attached.

Burden Hour Statement: This form is estimated to take 2.0 hours to complete. Time will vary depending upon the needs of the individual case. Any comments on the amount of time you are required to complete this form should be sent to the Chief Information Officer U. S. Patent and Trademark Office Washington DC 20231. DO NOT SEND FEES OR COMPLETED FORMS TO THIS ADDRESS. SEND TO: Assistant Commissioner for Patents Washington DC 20231.
DMSLIBRARY01\33726576.v1

ALL REFERENCES CONSIDERED EXCEPT WHERE LINED THROUGH. /J.T.V/

UNITED STATES PATENT AND TRADEMARK OFFICE

UNITED STATES DEPARTMENT OF COMMERCE
United States Patent and Trademark Office
Address: COMMISSIONER FOR PATENTS
P.O. Box 1450
Alexandria, Virginia 22313-1450
www.uspto.gov

BIB DATA SHEET

CONFIRMATION NO. 1254

SERIAL NUMBER	FILING or 371(c) DATE	CLASS	GROUP ART UNIT	ATTORNEY DOCKET NO.
15/811,062	11/13/2017 **RULE**	315	2844	13682.227107

APPLICANTS
Cooper Technologies Company, Houston, TX;

INVENTORS
Steven Walter Pyshos, Peachtree City, GA;
Raymond Janik, Fayetteville, GA;
Kevin Roy Harpenau, Atlanta, GA;

**** CONTINUING DATA ****************************
This application is a CON of 15/435,141 02/16/2017 PAT 9820350
which claims benefit of 62/297,424 02/19/2016

**** FOREIGN APPLICATIONS ****************************

**** IF REQUIRED, FOREIGN FILING LICENSE GRANTED ****
11/28/2017

Foreign Priority claimed	❑ Yes ☑ No		STATE OR COUNTRY	SHEETS DRAWINGS	TOTAL CLAIMS	INDEPENDENT CLAIMS
35 USC 119(a-d) conditions met	❑ Yes ☑ No	❑ Met after Allowance				
Verified and Acknowledged	/JIMMY T VU/ Examiner's Signature	/JV/ Initials	GA	10	20	3

ADDRESS

King & Spalding LLP (Eaton/Cooper)
ATTN: IP Docketing Department
1100 Louisiana Street, Suite 4000
Houston, TX 77002-5213
UNITED STATES

TITLE

Configurable Lighting System

FILING FEE RECEIVED		
1740	FEES: Authority has been given in Paper No._____ to charge/credit DEPOSIT ACCOUNT No._____ for following:	❑ All Fees ❑ 1.16 Fees (Filing) ❑ 1.17 Fees (Processing Ext. of time) ❑ 1.18 Fees (Issue) ❑ Other _____ ❑ Credit

BIB (Rev. 05/07).

PTO/SB/08A (08-03)
Approved for use through 07/31/2006. OMB 0651-0031
U.S. Patent and Trademark Office: U.S. DEPARTMENT OF COMMERCE
Under the Paperwork Reduction Act of 1995 no persons are required to respond to a collection of information unless it contains a valid OMB control number.

Substitute for form 1449A/PTO

INFORMATION DISCLOSURE STATEMENT BY APPLICANT

(use as many sheets as necessary)

Sheet	1	of	1

Complete if Known	
Application Number	**15/811062**
Filing Date	**11-13-2017**
First Named Inventor	**Steven Walter Pyshos**
Group Art Unit	**2844**
Examiner Name	**Jimmy T. Vu**
Attorney Docket Number	**13682.227107**

U.S. PATENT DOCUMENTS

Examiner Initials *	Cite No. [1]	U.S. Patent Document Number	Kind Code (if known)	Name of Patentee or Applicant of Cited Document	Date of Publication of Cited Document MM-DD- YYYY	Pages Columns Lines Where Relevant Passages or Relevant Figures Appear
	1	7014336		Ducharme	03-21-2006	
	2	7255457		Ducharme	08-14-2007	

FOREIGN PATENT DOCUMENTS

Examiner Initials *	Cite No. [1]	Foreign Patent Document Office[3]	Number	Kind Code[2] (if known)	Name of Patentee or Applicant of Cited Document	Date of Publication of Cited Document MM-DD- YYYY	Pages Columns Lines Where Relevant Passages or Relevant Figures Appear	T [6]

OTHER PRIOR ART – NON PATENT LITERATURE DOCUMENTS

Examiner Initials *	Cite No. [1]	Include name of the author (in CAPITAL LETTERS) title of the article (when appropriate) title of the item (book magazine journal serial symposium catalog etc.) date page(s) volume-issue number(s) publisher city and/or country where published.	T [6]

Examiner Signature		Date Considered	

*EXAMINER: Initial if reference considered whether or not citation is in conformance with MPEP 609. Draw line through citation if not in conformance and not considered. Include copy of this form with next communication to applicant.

[1] Unique citation designation number. [2] See attached Kinds of U.S. Patent Documents. [3] Enter Office that issued the document by the two-letter code (WIPO Standard ST.3). [4] For Japanese patent documents the indication of the year of the reign of the Emperor must precede the serial number of the patent document. [5] Kind of document by the appropriate symbols as indicated on the document under WIPO Standard ST. 16 if possible. [6] Applicant is to place a check mark here if English language Translation is attached.

Burden Hour Statement: This form is estimated to take 2.0 hours to complete. Time will vary depending upon the needs of the individual case. Any comments on the amount of time you are required to complete this form should be sent to the Chief Information Officer U. S. Patent and Trademark Office Washington DC 20231. DO NOT SEND FEES OR COMPLETED FORMS TO THIS ADDRESS. SEND TO: Assistant Commissioner for Patents Washington DC 20231.
DMSLIBRARY01\33891967.v1

Electronic Patent Application Fee Transmittal	
Application Number:	15811062
Filing Date:	13-Nov-2017
Title of Invention:	CONFIGURABLE LIGHTING SYSTEM
First Named Inventor/Applicant Name:	Steven Walter Pyshos
Filer:	Robert Timothy Neufeld
Attorney Docket Number:	13682.227107

Filed as Large Entity

Filing Fees for Utility under 35 USC 111(a)

Description	Fee Code	Quantity	Amount	Sub-Total in USD($)
Basic Filing:				
Pages:				
Claims:				
Miscellaneous-Filing:				
Petition:				
Patent-Appeals-and-Interference:				
Post-Allowance-and-Post-Issuance:				
Extension-of-Time:				

Description	Fee Code	Quantity	Amount	Sub-Total in USD($)
Miscellaneous:				
SUBMISSION- INFORMATION DISCLOSURE STMT	1806	1	240	240
		Total in USD ($)		**240**

Electronic Acknowledgement Receipt	
EFS ID:	35218974
Application Number:	15811062
International Application Number:	
Confirmation Number:	1254
Title of Invention:	CONFIGURABLE LIGHTING SYSTEM
First Named Inventor/Applicant Name:	Steven Walter Pyshos
Customer Number:	91764
Filer:	Robert Timothy Neufeld
Filer Authorized By:	
Attorney Docket Number:	13682.227107
Receipt Date:	22-FEB-2019
Filing Date:	13-NOV-2017
Time Stamp:	13:23:23
Application Type:	Utility under 35 USC 111(a)

Payment information:

Submitted with Payment	yes
Payment Type	CARD
Payment was successfully received in RAM	$240
RAM confirmation Number	022219INTEFSW13235100
Deposit Account	
Authorized User	
The Director of the USPTO is hereby authorized to charge indicated fees and credit any overpayment as follows:	

File Listing:

Document Number	Document Description	File Name	File Size(Bytes)/ Message Digest	Multi Part /.zip	Pages (if appl.)
1	Transmittal Letter	227107trans.pdf	102103 d1fea33da4c2a662bec8ebcd558c03e3313514c4	no	3
Warnings:					
Information:					
2	Information Disclosure Statement (IDS) Form (SB08)	227107ids.pdf	142618 fcd186d8e41bd7ca816ae4f79ab0563948a7fd2b	no	1
Warnings:					
Information:					
This is not an USPTO supplied IDS fillable form					
3	Fee Worksheet (SB06)	fee-info.pdf	30630 c95b7c5f8b6b36e8e81009bd9f8cf3eb4ee1987a	no	2
Warnings:					
Information:					
		Total Files Size (in bytes):	275351		

This Acknowledgement Receipt evidences receipt on the noted date by the USPTO of the indicated documents, characterized by the applicant, and including page counts, where applicable. It serves as evidence of receipt similar to a Post Card, as described in MPEP 503.

<u>New Applications Under 35 U.S.C. 111</u>
If a new application is being filed and the application includes the necessary components for a filing date (see 37 CFR 1.53(b)-(d) and MPEP 506), a Filing Receipt (37 CFR 1.54) will be issued in due course and the date shown on this Acknowledgement Receipt will establish the filing date of the application.
<u>National Stage of an International Application under 35 U.S.C. 371</u>
If a timely submission to enter the national stage of an international application is compliant with the conditions of 35 U.S.C. 371 and other applicable requirements a Form PCT/DO/EO/903 indicating acceptance of the application as a national stage submission under 35 U.S.C. 371 will be issued in addition to the Filing Receipt, in due course.
<u>New International Application Filed with the USPTO as a Receiving Office</u>
If a new international application is being filed and the international application includes the necessary components for an international filing date (see PCT Article 11 and MPEP 1810), a Notification of the International Application Number and of the International Filing Date (Form PCT/RO/105) will be issued in due course, subject to prescriptions concerning national security, and the date shown on this Acknowledgement Receipt will establish the international filing date of the application.

IN THE UNITED STATES PATENT AND TRADEMARK OFFICE

In re Application of:	§	
Steven Walter Pyshos	§	Confirmation No.: **1254**
	§	
Application Serial No: **15/811,062**	§	Group Art Unit: **2844**
	§	
Filed: **11-13-2017**	§	Examiner: **Jimmy T. Vu**
	§	
For: **Configurable Lighting System**	§	Attorney Docket: **13682.227107**

INFORMATION DISCLOSURE STATEMENT

Commissioner for Patents
P.O. Box 1450
Alexandria, VA 22313-1450

Sir:

This Information Disclosure Statement is filed in accordance with 37 C.F.R. §§1.56, 1.97 and 1.98. The items listed on Form SB/08B are made of record to assist the Patent and Trademark Office in its examination of this application. The Examiner is respectfully requested to fully consider the items and to independently ascertain their teaching.

1. ☐ For each of the following items listed on the enclosed copy of Form SB/08B that is not in the English language, an English language translation of that item or a portion thereof or a concise explanation of the relevance of that item is enclosed:

2. ☐ For each of the following items listed on the enclosed copy of Form SB/08B that is not in the English language, a concise explanation of the relevance of that item is provided:

3. ☐ Any copy of the items listed on the enclosed copy of Form SB/08B that is not enclosed with this Information Disclosure Statement was previously cited by or submitted to the Patent and Trademark Office in application Serial No.

4. ☐ No fee is due under 37 C.F.R. §1.17(p) for this Information Disclosure Statement since it is being filed in compliance with:

   ☐ 37 C.F.R. §1.97(b)(1), within three months of the filing date of a national application other than a CPA; or

☐ 37 C.F.R. §1.97(b)(2), within three months of the date of entry into the national stage as set forth in §1.491 in an international application; or

☐ 37 C.F.R. §1.97(b)(3), before the mailing date of a first Office action on the merits; or

☐ 37 C.F.R. §1.97(b)(4) before the mailing date of a first office action after the filing of an RCE under §1.114

5. ☐ No fee is due under 37 C.F.R. §1.17(p) for this Supplemental Information Disclosure Statement since it is being filed in compliance with 37 C.F.R. §1.97(c), after the period specified in paragraph 4 above but before the mailing date of a final action or a Notice of Allowance (where there has been no prior final action), and is accompanied by one of the certifications pursuant to 37 C.F.R. §1.97(e) set forth in paragraph 9 below.

6. ☐ A fee is due under 37 C.F.R. §1.17(p) for this Supplemental Information Disclosure Statement since it is being filed in compliance with 37 C.F.R. §1.97(c), after the period specified in paragraph 4 above but before the mailing date of a final action or a notice of allowance (where there has been no prior final action):

☐ Payment of $240.00 is being made with a credit card via EFS-Web.

☐ Charge the fee to Deposit Account No.11-0980, Order No._____.

7. ☒ A fee is due under 37 C.F.R. §1.17(p) for this Supplemental Information Disclosure Statement since it is being filed in compliance with 37 C.F.R. §1.97(d), after the mailing date of a final action or a notice of allowance, whichever comes first, but before payment of the issue fee, and is accompanied by:

a. one of the certifications pursuant to 37 C.F.R. §1.97(e) set forth in paragraph 9 below; and

b. the fee due under 37 C.F.R. §1.17(p) which is paid as set forth in paragraph 11 below.

8. ☐ This Supplemental Information Disclosure Statement is being filed in compliance with:

a. ☐ 37 C.F.R. §1.313(b)(3) or §1.313(c)(1), after the issue fee has been paid and information cited in this Supplemental Information Disclosure Statement may render at least one claim unpatentable and is accompanied by the attached Petition To Withdraw Application From Issue and fee pursuant to 37 C.F.R. §1.17(h);

b. ☐ 37 C.F.R. §1.313(c)(2) or §1.313(c)(3), after the issue fee has been paid and information cited in this Supplemental Information Disclosure Statement is to be considered in a Request for Continued Examination (RCE) or a Continuation application upon abandonment of the instant application and is accompanied by the attached Petition To Withdraw Application From Issue and fee pursuant to 37 C.F.R. §1.17(h).

c. ☐ The fee due under 37 C.F.R. §§1.17(h) is paid as set forth in paragraph 11 below.

9. ☐ I hereby certify that each item of information contained in this Supplemental Information Disclosure Statement was first cited in a communication from a foreign patent office in a counterpart foreign application not more than three months prior to the filing of this Supplemental Information Disclosure Statement.

☒ I hereby certify that no item of information in the Supplemental Information Disclosure Statement filed herewith was cited in a communication from a foreign patent office in a counterpart foreign application or, to my knowledge after making reasonable inquiry, was known to any individual designated in §1.56(c) more than three months prior to the filing of this Supplemental Information Disclosure Statement.

10. ☐ This document is accompanied by ☐ a Search Report ☐ Communication which was cited in a corresponding ☐ PCT or ☐ Foreign counterpart application.

11. ☒ Charge any fees due under 37 C.F.R. §§1.17(h) and 1.17(p) to Deposit Account No.-110980.

☒ The Commissioner is hereby authorized to charge any additional fees which may be required for this Information Disclosure Statement, or credit any overpayment to Deposit Account No. 11-0980.

Respectfully submitted,
KING & SPALDING LLP

/Robert T. Neufeld/
Robert T. Neufeld
Reg. No. 48394

Correspondence Address:
King & Spalding LLP
1180 Peachtree Street
Atlanta, GA 30309
404-572-4600 Telephone
404-572-5100 Facsimile

PTO/SB/08A (08-03)
Approved for use through 07/31/2006. OMB 0651-0031
U.S. Patent and Trademark Office: U.S. DEPARTMENT OF COMMERCE
Under the Paperwork Reduction Act of 1995 no persons are required to respond to a collection of information unless it contains a valid OMB control number.

Substitute for form 1449A/PTO

INFORMATION DISCLOSURE STATEMENT BY APPLICANT

(use as many sheets as necessary)

Sheet	1	of	1

Complete if Known	
Application Number	**15/811062**
Filing Date	**11-13-2017**
First Named Inventor	**Steven Walter Pyshos**
Group Art Unit	**2844**
Examiner Name	**Jimmy T. Vu**
Attorney Docket Number	**13682.227107**

U.S. PATENT DOCUMENTS

Examiner Initials *	Cite No. [1]	U.S. Patent Document Number	Kind Code (if known)	Name of Patentee or Applicant of Cited Document	Date of Publication of Cited Document MM-DD- YYYY	Pages Columns Lines Where Relevant Passages or Relevant Figures Appear
	1.	10136503		Chen	11-20-2018	

FOREIGN PATENT DOCUMENTS

Examiner Initials *	Cite No. [1]	Foreign Patent Document Office[3]	Number	Kind Code[2] (if known)	Name of Patentee or Applicant of Cited Document	Date of Publication of Cited Document MM-DD- YYYY	Pages Columns Lines Where Relevant Passages or Relevant Figures Appear	T [6]

OTHER PRIOR ART – NON PATENT LITERATURE DOCUMENTS

Examiner Initials *	Cite No. [1]	Include name of the author (in CAPITAL LETTERS) title of the article (when appropriate) title of the item (book magazine journal serial symposium catalog etc.) date page(s) volume-issue number(s) publisher city and/or country where published.	T [6]

Examiner Signature		Date Considered	

*EXAMINER: Initial if reference considered whether or not citation is in conformance with MPEP 609. Draw line through citation if not in conformance and not considered. Include copy of this form with next communication to applicant.

[1] Unique citation designation number. [2] See attached Kinds of U.S. Patent Documents. [3] Enter Office that issued the document by the two-letter code (WIPO Standard ST.3). [4] For Japanese patent documents the indication of the year of the reign of the Emperor must precede the serial number of the patent document. [5] Kind of document by the appropriate symbols as indicated on the document under WIPO Standard ST. 16 if possible. [6] Applicant is to place a check mark here if English language Translation is attached.

Burden Hour Statement: This form is estimated to take 2.0 hours to complete. Time will vary depending upon the needs of the individual case. Any comments on the amount of time you are required to complete this form should be sent to the Chief Information Officer U. S. Patent and Trademark Office Washington DC 20231. DO NOT SEND FEES OR COMPLETED FORMS TO THIS ADDRESS. SEND TO: Assistant Commissioner for Patents Washington DC 20231.
DMSLIBRARY01\33891967.v1

Electronic Patent Application Fee Transmittal	
Application Number:	15811062
Filing Date:	13-Nov-2017
Title of Invention:	CONFIGURABLE LIGHTING SYSTEM
First Named Inventor/Applicant Name:	Steven Walter Pyshos
Filer:	Robert Timothy Neufeld
Attorney Docket Number:	13682.227107

Filed as Large Entity

Filing Fees for Utility under 35 USC 111(a)

Description	Fee Code	Quantity	Amount	Sub-Total in USD($)
Basic Filing:				
Pages:				
Claims:				
Miscellaneous-Filing:				
Petition:				
Patent-Appeals-and-Interference:				
Post-Allowance-and-Post-Issuance:				
Extension-of-Time:				

Description	Fee Code	Quantity	Amount	Sub-Total in USD($)
Miscellaneous:				
SUBMISSION- INFORMATION DISCLOSURE STMT	1806	1	240	240
		Total in USD ($)		**240**

Electronic Acknowledgement Receipt	
EFS ID:	35267583
Application Number:	15811062
International Application Number:	
Confirmation Number:	1254
Title of Invention:	CONFIGURABLE LIGHTING SYSTEM
First Named Inventor/Applicant Name:	Steven Walter Pyshos
Customer Number:	91764
Filer:	Robert Timothy Neufeld
Filer Authorized By:	
Attorney Docket Number:	13682.227107
Receipt Date:	27-FEB-2019
Filing Date:	13-NOV-2017
Time Stamp:	19:50:39
Application Type:	Utility under 35 USC 111(a)

Payment information:

Submitted with Payment	yes
Payment Type	CARD
Payment was successfully received in RAM	$240
RAM confirmation Number	022819INTEFSW19510701
Deposit Account	
Authorized User	
The Director of the USPTO is hereby authorized to charge indicated fees and credit any overpayment as follows:	

File Listing:

Document Number	Document Description	File Name	File Size(Bytes)/ Message Digest	Multi Part /.zip	Pages (if appl.)
1	Transmittal Letter	227107trans.pdf	102103 d1fea33da4c2a662bec8ebcd558c03e3313514c4	no	3
Warnings:					
Information:					
2	Information Disclosure Statement (IDS) Form (SB08)	227107ids.pdf	141750 07f5927257249812cd70b55268b11b2da3efacde	no	1
Warnings:					
Information:					
This is not an USPTO supplied IDS fillable form					
3	Fee Worksheet (SB06)	fee-info.pdf	30630 245fd8c29f7b87f8c21c6c726e77a4221648459c	no	2
Warnings:					
Information:					
		Total Files Size (in bytes):	274483		

This Acknowledgement Receipt evidences receipt on the noted date by the USPTO of the indicated documents, characterized by the applicant, and including page counts, where applicable. It serves as evidence of receipt similar to a Post Card, as described in MPEP 503.

New Applications Under 35 U.S.C. 111
If a new application is being filed and the application includes the necessary components for a filing date (see 37 CFR 1.53(b)-(d) and MPEP 506), a Filing Receipt (37 CFR 1.54) will be issued in due course and the date shown on this Acknowledgement Receipt will establish the filing date of the application.
National Stage of an International Application under 35 U.S.C. 371
If a timely submission to enter the national stage of an international application is compliant with the conditions of 35 U.S.C. 371 and other applicable requirements a Form PCT/DO/EO/903 indicating acceptance of the application as a national stage submission under 35 U.S.C. 371 will be issued in addition to the Filing Receipt, in due course.
New International Application Filed with the USPTO as a Receiving Office
If a new international application is being filed and the international application includes the necessary components for an international filing date (see PCT Article 11 and MPEP 1810), a Notification of the International Application Number and of the International Filing Date (Form PCT/RO/105) will be issued in due course, subject to prescriptions concerning national security, and the date shown on this Acknowledgement Receipt will establish the international filing date of the application.

IN THE UNITED STATES PATENT AND TRADEMARK OFFICE

In re Application of:	§	
Steven Walter Pyshos	§	Confirmation No.: **1254**
	§	
Application Serial No: **15/811,062**	§	Group Art Unit: **2844**
	§	
Filed: **11-13-2017**	§	Examiner: **Jimmy T. Vu**
	§	
For: **Configurable Lighting System**	§	Attorney Docket: **13682.227107**

INFORMATION DISCLOSURE STATEMENT

Commissioner for Patents
P.O. Box 1450
Alexandria, VA 22313-1450

Sir:

This Information Disclosure Statement is filed in accordance with 37 C.F.R. §§1.56, 1.97 and 1.98. The items listed on Form SB/08B are made of record to assist the Patent and Trademark Office in its examination of this application. The Examiner is respectfully requested to fully consider the items and to independently ascertain their teaching.

1. ☐ For each of the following items listed on the enclosed copy of Form SB/08B that is not in the English language, an English language translation of that item or a portion thereof or a concise explanation of the relevance of that item is enclosed:

2. ☐ For each of the following items listed on the enclosed copy of Form SB/08B that is not in the English language, a concise explanation of the relevance of that item is provided:

3. ☐ Any copy of the items listed on the enclosed copy of Form SB/08B that is not enclosed with this Information Disclosure Statement was previously cited by or submitted to the Patent and Trademark Office in application Serial No.

4. ☐ No fee is due under 37 C.F.R. §1.17(p) for this Information Disclosure Statement since it is being filed in compliance with:

   ☐ 37 C.F.R. §1.97(b)(1), within three months of the filing date of a national application other than a CPA; or

☐ 37 C.F.R. §1.97(b)(2), within three months of the date of entry into the national stage as set forth in §1.491 in an international application; or

☐ 37 C.F.R. §1.97(b)(3), before the mailing date of a first Office action on the merits; or

☐ 37 C.F.R. §1.97(b)(4) before the mailing date of a first office action after the filing of an RCE under §1.114

5. ☐ No fee is due under 37 C.F.R. §1.17(p) for this Supplemental Information Disclosure Statement since it is being filed in compliance with 37 C.F.R. §1.97(c), after the period specified in paragraph 4 above but before the mailing date of a final action or a Notice of Allowance (where there has been no prior final action), and is accompanied by one of the certifications pursuant to 37 C.F.R. §1.97(e) set forth in paragraph 9 below.

6. ☐ A fee is due under 37 C.F.R. §1.17(p) for this Supplemental Information Disclosure Statement since it is being filed in compliance with 37 C.F.R. §1.97(c), after the period specified in paragraph 4 above but before the mailing date of a final action or a notice of allowance (where there has been no prior final action):

☐ Payment of $240.00 is being made with a credit card via EFS-Web.

☐ Charge the fee to Deposit Account No.11-0980, Order No._____.

7. ☒ A fee is due under 37 C.F.R. §1.17(p) for this Supplemental Information Disclosure Statement since it is being filed in compliance with 37 C.F.R. §1.97(d), after the mailing date of a final action or a notice of allowance, whichever comes first, but before payment of the issue fee, and is accompanied by:

a. one of the certifications pursuant to 37 C.F.R. §1.97(e) set forth in paragraph 9 below; and

b. the fee due under 37 C.F.R. §1.17(p) which is paid as set forth in paragraph 11 below.

8. ☐ This Supplemental Information Disclosure Statement is being filed in compliance with:

a. ☐ 37 C.F.R. §1.313(b)(3) or §1.313(c)(1), after the issue fee has been paid and information cited in this Supplemental Information Disclosure Statement may render at least one claim unpatentable and is accompanied by the attached Petition To Withdraw Application From Issue and fee pursuant to 37 C.F.R. §1.17(h);

b. ☐ 37 C.F.R. §1.313(c)(2) or §1.313(c)(3), after the issue fee has been paid and information cited in this Supplemental Information Disclosure Statement is to be considered in a Request for Continued Examination (RCE) or a Continuation application upon abandonment of the instant application and is accompanied by the attached Petition To Withdraw Application From Issue and fee pursuant to 37 C.F.R. §1.17(h).

c. ☐ The fee due under 37 C.F.R. §§1.17(h) is paid as set forth in paragraph 11 below.

9. ☐ I hereby certify that each item of information contained in this Supplemental Information Disclosure Statement was first cited in a communication from a foreign patent office in a counterpart foreign application not more than three months prior to the filing of this Supplemental Information Disclosure Statement.

☒ I hereby certify that no item of information in the Supplemental Information Disclosure Statement filed herewith was cited in a communication from a foreign patent office in a counterpart foreign application or, to my knowledge after making reasonable inquiry, was known to any individual designated in §1.56(c) more than three months prior to the filing of this Supplemental Information Disclosure Statement.

10. ☐ This document is accompanied by ☐ a Search Report ☐ Communication which was cited in a corresponding ☐ PCT or ☐ Foreign counterpart application.

11. ☒ Charge any fees due under 37 C.F.R. §§1.17(h) and 1.17(p) to Deposit Account No.-110980.

☒ The Commissioner is hereby authorized to charge any additional fees which may be required for this Information Disclosure Statement, or credit any overpayment to Deposit Account No. 11-0980.

Respectfully submitted,
KING & SPALDING LLP

/Robert T. Neufeld/
Robert T. Neufeld
Reg. No. 48394

Correspondence Address:
King & Spalding LLP
1180 Peachtree Street
Atlanta, GA 30309
404-572-4600 Telephone
404-572-5100 Facsimile

UNITED STATES PATENT AND TRADEMARK OFFICE

UNITED STATES DEPARTMENT OF COMMERCE
United States Patent and Trademark Office
Address: COMMISSIONER FOR PATENTS
P.O. Box 1450
Alexandria, Virginia 22313-1450
www.uspto.gov

APPLICATION NO.	FILING DATE	FIRST NAMED INVENTOR	ATTORNEY DOCKET NO.	CONFIRMATION NO.
15/811,062	11/13/2017	Steven Walter Pyshos	13682.227107	1254

91764 7590 03/28/2019
King & Spalding LLP (Eaton/Cooper)
ATTN: IP Docketing Department
1100 Louisiana Street, Suite 4000
Houston, TX 77002-5213

EXAMINER
VU, JIMMY T

ART UNIT	PAPER NUMBER
2844	

NOTIFICATION DATE	DELIVERY MODE
03/28/2019	ELECTRONIC

Please find below and/or attached an Office communication concerning this application or proceeding.

The time period for reply, if any, is set in the attached communication.

Notice of the Office communication was sent electronically on above-indicated "Notification Date" to the following e-mail address(es):

houpatentdocket@kslaw.com
nduby@kslaw.com

PTOL-90A (Rev. 04/07)

UNITED STATES DEPARTMENT OF COMMERCE
U.S. Patent and Trademark Office
Address: COMMISSIONER FOR PATENTS
P.O. Box 1450
Alexandria, Virginia 22313-1450

APPLICATION NO./ CONTROL NO.	FILING DATE	FIRST NAMED INVENTOR/ PATENT IN REEXAMINATION	ATTORNEY DOCKET NO.
15/811,062	11/13/2017	Pyshos et al.	13682.227107

		EXAMINER	
King & Spalding LLP (Eaton/Cooper) ATTN: IP Docketing Department 1100 Louisiana Street, Suite 4000 Houston, TX 77002-5213		JIMMY T VU	
		ART UNIT	PAPER
		2844	20190325

DATE MAILED: _____

Please find below and/or attached an Office communication concerning this application or proceeding.

Commissioner for Patents

The references cited in the Information Disclosure Statement(s) (IDS(s)) filed on 02/22/2019 and 02/27/2019 have been considered by the examiner. /JV/

/JIMMY T VU/
Primary Examiner, Art Unit 2844

PTO-90C (Rev.04-03)

PTO/SB/08A (08-03)
Approved for use through 07/31/2006. OMB 0651-0031
U.S. Patent and Trademark Office: U.S. DEPARTMENT OF COMMERCE
Under the Paperwork Reduction Act of 1995 no persons are required to respond to a collection of information unless it contains a valid OMB control number.

Substitute for form 1449A/PTO

INFORMATION DISCLOSURE STATEMENT BY APPLICANT

(use as many sheets as necessary)

Sheet	1	of	1

Complete if Known	
Application Number	**15/811062**
Filing Date	**11-13-2017**
First Named Inventor	**Steven Walter Pyshos**
Group Art Unit	**2844**
Examiner Name	**Jimmy T. Vu**
Attorney Docket Number	**13682.227107**

U.S. PATENT DOCUMENTS

Examiner Initials *	Cite No. [1]	U.S. Patent Document Number	Kind Code (if known)	Name of Patentee or Applicant of Cited Document	Date of Publication of Cited Document MM-DD- YYYY	Pages Columns Lines Where Relevant Passages or Relevant Figures Appear
	1	7014336		Ducharme	03-21-2006	
	2	7255457		Ducharme	08-14-2007	

FOREIGN PATENT DOCUMENTS

Examiner Initials *	Cite No. [1]	Foreign Patent Document Office[3]	Number	Kind Code[2] (if known)	Name of Patentee or Applicant of Cited Document	Date of Publication of Cited Document MM-DD- YYYY	Pages Columns Lines Where Relevant Passages or Relevant Figures Appear	T [6]

OTHER PRIOR ART – NON PATENT LITERATURE DOCUMENTS

Examiner Initials *	Cite No. [1]	Include name of the author (in CAPITAL LETTERS) title of the article (when appropriate) title of the item (book magazine journal serial symposium catalog etc.) date page(s) volume-issue number(s) publisher city and/or country where published.	T [6]

Examiner Signature	/JIMMY T VU/	Date Considered	03/25/2019

*EXAMINER: Initial if reference considered whether or not citation is in conformance with MPEP 609. Draw line through citation if not in conformance and not considered. Include copy of this form with next communication to applicant.

[1] Unique citation designation number. [2] See attached Kinds of U.S. Patent Documents. [3] Enter Office that issued the document by the two-letter code (WIPO Standard ST.3). [4] For Japanese patent documents the indication of the year of the reign of the Emperor must precede the serial number of the patent document. [5] Kind of document by the appropriate symbols as indicated on the document under WIPO Standard ST. 16 if possible. [6] Applicant is to place a check mark here if English language Translation is attached.

Burden Hour Statement: This form is estimated to take 2.0 hours to complete. Time will vary depending upon the needs of the individual case. Any comments on the amount of time you are required to complete this form should be sent to the Chief Information Officer U. S. Patent and Trademark Office Washington DC 20231. DO NOT SEND FEES OR COMPLETED FORMS TO THIS ADDRESS. SEND TO: Assistant Commissioner for Patents Washington DC 20231.
DMSLIBRARY01\33891967.v1

ALL REFERENCES CONSIDERED EXCEPT WHERE LINED THROUGH. /J.T.V/

PTO/SB/08A (08-03)
Approved for use through 07/31/2006. OMB 0651-0031
U.S. Patent and Trademark Office: U.S. DEPARTMENT OF COMMERCE
Under the Paperwork Reduction Act of 1995 no persons are required to respond to a collection of information unless it contains a valid OMB control number.

Substitute for form 1449A/PTO

INFORMATION DISCLOSURE STATEMENT BY APPLICANT

(use as many sheets as necessary)

Sheet	1	of	1

Complete if Known	
Application Number	**15/811062**
Filing Date	**11-13-2017**
First Named Inventor	**Steven Walter Pyshos**
Group Art Unit	**2844**
Examiner Name	**Jimmy T. Vu**
Attorney Docket Number	**13682.227107**

U.S. PATENT DOCUMENTS

Examiner Initials *	Cite No. [1]	U.S. Patent Document Number	Kind Code (if known)	Name of Patentee or Applicant of Cited Document	Date of Publication of Cited Document MM-DD- YYYY	Pages Columns Lines Where Relevant Passages or Relevant Figures Appear
	1.	10136503		Chen	11-20-2018	

FOREIGN PATENT DOCUMENTS

Examiner Initials *	Cite No. [1]	Foreign Patent Document Office[3]	Number	Kind Code[2] (if known)	Name of Patentee or Applicant of Cited Document	Date of Publication of Cited Document MM-DD- YYYY	Pages Columns Lines Where Relevant Passages or Relevant Figures Appear	T [6]

OTHER PRIOR ART – NON PATENT LITERATURE DOCUMENTS

Examiner Initials *	Cite No. [1]	Include name of the author (in CAPITAL LETTERS) title of the article (when appropriate) title of the item (book magazine journal serial symposium catalog etc.) date page(s) volume-issue number(s) publisher city and/or country where published.	T [6]

Examiner Signature	/JIMMY T VU/	Date Considered	03/25/2019

*EXAMINER: Initial if reference considered whether or not citation is in conformance with MPEP 609. Draw line through citation if not in conformance and not considered. Include copy of this form with next communication to applicant.

[1] Unique citation designation number. [2] See attached Kinds of U.S. Patent Documents. [3] Enter Office that issued the document by the two-letter code (WIPO Standard ST.3). [4] For Japanese patent documents the indication of the year of the reign of the Emperor must precede the serial number of the patent document. [5] Kind of document by the appropriate symbols as indicated on the document under WIPO Standard ST. 16 if possible. [6] Applicant is to place a check mark here if English language Translation is attached.

Burden Hour Statement: This form is estimated to take 2.0 hours to complete. Time will vary depending upon the needs of the individual case. Any comments on the amount of time you are required to complete this form should be sent to the Chief Information Officer U. S. Patent and Trademark Office Washington DC 20231. DO NOT SEND FEES OR COMPLETED FORMS TO THIS ADDRESS. SEND TO: Assistant Commissioner for Patents Washington DC 20231.
DMSLIBRARY01\33891967.v1

ALL REFERENCES CONSIDERED EXCEPT WHERE LINED THROUGH. /J.T.V/

PTO/SB/47 (03-09)
Approved for use through 03/31/2012. OMB 0651-0016
U.S. Patent and Trademark Office; U. S. DEPARTMENT OF COMMERCE
Under the Paperwork Reduction Act of 1995, no persons are required to respond to a collection of information unless it displays a valid OMB control number.

"FEE ADDRESS" INDICATION FORM

Address to:
Mail Stop M Correspondence
Commissioner for Patents
P.O. Box 1450
Alexandria, VA 22313-1450

- OR -

Fax to:
571-273-6500

INSTRUCTIONS: The issue fee must have been paid for application(s) listed on this form. In addition, only an address represented by a Customer Number can be established as the fee address for maintenance fee purposes (hereafter, fee address). A fee address should be established when correspondence related to maintenance fees should be mailed to a different address than the correspondence address for the application. **When to check the first box below**: If you have a Customer Number to represent the fee address. **When to check the second box below**: If you have no Customer Number representing the desired fee address, in which case a completed Request for Customer Number (PTO/SB/125) must be attached to this form. For more information on Customer Numbers, see the Manual of Patent Examining Procedure (MPEP) § 403.

For the following listed application(s), please recognize as the "Fee Address" under the provisions of 37 CFR 1.363 the address associated with:

☑ Customer Number: 00124

OR

☐ The attached Request for Customer Number (PTO/SB/125) form.

PATENT NUMBER (if known)	APPLICATION NUMBER
	15/811062

Completed by (check one):

☐ Applicant/Inventor

☑ Attorney or Agent of record 48,394 (Reg. No.)

☐ Assignee of record of the entire interest. See 37 CFR 3.71. Statement under 37 CFR 3.73(b) is enclosed. (Form PTO/SB/96)

☐ Assignee recorded at Reel _____ Frame_____

/Robert T. Neufeld/
Signature

Robert T. Neufeld
Typed or printed name

404.572.4600
Requester's telephone number

March 29, 2019
Date

NOTE: Signatures of all the inventors or assignees of record of the entire interest or their representative(s) are required. Submit multiple forms if more that one signature is required, see below*.

☑ *** Total of 1 forms are submitted.**

This collection of information is required by 37 CFR 1.363. The information is required to obtain or retain a benefit by the public which is to file (and by the USPTO to process) an application. Confidentiality is governed by 35 U.S.C. 122 and 37 CFR 1. 11 and 1.14. This collection is estimated to take 5 minutes to complete, including gathering, preparing, and submitting the completed application form to the USPTO. Time will vary depending upon the individual case. Any comments on the amount of time you require to complete this form and/or suggestions for reducing this burden, should be sent to the Chief Information Officer, U.S. Patent and Trademark Office, U.S. Department of Commerce, P.O. Box 1450, Alexandria, VA 22313- 1450. DO NOT SEND COMPLETED FORMS TO THIS ADDRESS.
SEND TO: Mail Stop M Correspondence, Commissioner for Patents, P.O. Box 1450, Alexandria, VA 22313-1450.
If you need assistance in completing the form, call 1-800-PTO-9199 and select option 2.

Privacy Act Statement

The **Privacy Act of 1974 (P.L. 93-579)** requires that you be given certain information in connection with your submission of the attached form related to a patent application or patent. Accordingly, pursuant to the requirements of the Act, please be advised that: (1) the general authority for the collection of this information is 35 U.S.C. 2(b)(2); (2) furnishing of the information solicited is voluntary; and (3) the principal purpose for which the information is used by the U.S. Patent and Trademark Office is to process and/or examine your submission related to a patent application or patent. If you do not furnish the requested information, the U.S. Patent and Trademark Office may not be able to process and/or examine your submission, which may result in termination of proceedings or abandonment of the application or expiration of the patent.

The information provided by you in this form will be subject to the following routine uses:

1. The information on this form will be treated confidentially to the extent allowed under the Freedom of Information Act (5 U.S.C. 552) and the Privacy Act (5 U.S.C 552a). Records from this system of records may be disclosed to the Department of Justice to determine whether disclosure of these records is required by the Freedom of Information Act.
2. A record from this system of records may be disclosed, as a routine use, in the course of presenting evidence to a court, magistrate, or administrative tribunal, including disclosures to opposing counsel in the course of settlement negotiations.
3. A record in this system of records may be disclosed, as a routine use, to a Member of Congress submitting a request involving an individual, to whom the record pertains, when the individual has requested assistance from the Member with respect to the subject matter of the record.
4. A record in this system of records may be disclosed, as a routine use, to a contractor of the Agency having need for the information in order to perform a contract. Recipients of information shall be required to comply with the requirements of the Privacy Act of 1974, as amended, pursuant to 5 U.S.C. 552a(m).
5. A record related to an International Application filed under the Patent Cooperation Treaty in this system of records may be disclosed, as a routine use, to the International Bureau of the World Intellectual Property Organization, pursuant to the Patent Cooperation Treaty.
6. A record in this system of records may be disclosed, as a routine use, to another federal agency for purposes of National Security review (35 U.S.C. 181) and for review pursuant to the Atomic Energy Act (42 U.S.C. 218(c)).
7. A record from this system of records may be disclosed, as a routine use, to the Administrator, General Services, or his/her designee, during an inspection of records conducted by GSA as part of that agency's responsibility to recommend improvements in records management practices and programs, under authority of 44 U.S.C. 2904 and 2906. Such disclosure shall be made in accordance with the GSA regulations governing inspection of records for this purpose, and any other relevant (*i.e.*, GSA or Commerce) directive. Such disclosure shall not be used to make determinations about individuals.
8. A record from this system of records may be disclosed, as a routine use, to the public after either publication of the application pursuant to 35 U.S.C. 122(b) or issuance of a patent pursuant to 35 U.S.C. 151. Further, a record may be disclosed, subject to the limitations of 37 CFR 1.14, as a routine use, to the public if the record was filed in an application which became abandoned or in which the proceedings were terminated and which application is referenced by either a published application, an application open to public inspection or an issued patent.
9. A record from this system of records may be disclosed, as a routine use, to a Federal, State, or local law enforcement agency, if the USPTO becomes aware of a violation or potential violation of law or regulation.

Electronic Patent Application Fee Transmittal

Application Number:	15811062
Filing Date:	13-Nov-2017
Title of Invention:	CONFIGURABLE LIGHTING SYSTEM
First Named Inventor/Applicant Name:	Steven Walter Pyshos
Filer:	Robert Timothy Neufeld
Attorney Docket Number:	13682.227107

Filed as Large Entity

Filing Fees for Utility under 35 USC 111(a)

Description	Fee Code	Quantity	Amount	Sub-Total in USD($)
Basic Filing:				
Pages:				
Claims:				
Miscellaneous-Filing:				
Petition:				
Patent-Appeals-and-Interference:				
Post-Allowance-and-Post-Issuance:				
UTILITY APPL ISSUE FEE	1501	1	1000	1000

Description	Fee Code	Quantity	Amount	Sub-Total in USD($)
Extension-of-Time:				
Miscellaneous:				
		Total in USD ($)		**1000**

Electronic Acknowledgement Receipt	
EFS ID:	35575938
Application Number:	15811062
International Application Number:	
Confirmation Number:	1254
Title of Invention:	CONFIGURABLE LIGHTING SYSTEM
First Named Inventor/Applicant Name:	Steven Walter Pyshos
Customer Number:	91764
Filer:	Robert Timothy Neufeld
Filer Authorized By:	
Attorney Docket Number:	13682.227107
Receipt Date:	29-MAR-2019
Filing Date:	13-NOV-2017
Time Stamp:	18:02:34
Application Type:	Utility under 35 USC 111(a)

Payment information:

Submitted with Payment	yes
Payment Type	CARD
Payment was successfully received in RAM	$1000
RAM confirmation Number	040119INTEFSW18034400
Deposit Account	110980
Authorized User	Sally Sexton
The Director of the USPTO is hereby authorized to charge indicated fees and credit any overpayment as follows: 37 CFR 1.16 (National application filing, search, and examination fees) 37 CFR 1.17 (Patent application and reexamination processing fees)	

37 CFR 1.19 (Document supply fees)

37 CFR 1.20 (Post Issuance fees)

37 CFR 1.21 (Miscellaneous fees and charges)

File Listing:

Document Number	Document Description	File Name	File Size(Bytes)/ Message Digest	Multi Part /.zip	Pages (if appl.)
1	Issue Fee Payment (PTO-85B)	227107noa.pdf	99405 41a26bd9a23bd26140e0ed85f8222d027f0 06233	no	1
Warnings:					
Information:					
2	Maintenance Fee Address Change	2277107fee.pdf	312216 68967cf2c9e679a6f33276ff0728d5f6437ca 9d5	no	2
Warnings:					
Information:					
3	Fee Worksheet (SB06)	fee-info.pdf	30348 05e52c13f2563e0e05feac067c5a199f1218f aaa	no	2
Warnings:					
Information:					
		Total Files Size (in bytes):	441969		

This Acknowledgement Receipt evidences receipt on the noted date by the USPTO of the indicated documents, characterized by the applicant, and including page counts, where applicable. It serves as evidence of receipt similar to a Post Card, as described in MPEP 503.

New Applications Under 35 U.S.C. 111
If a new application is being filed and the application includes the necessary components for a filing date (see 37 CFR 1.53(b)-(d) and MPEP 506), a Filing Receipt (37 CFR 1.54) will be issued in due course and the date shown on this Acknowledgement Receipt will establish the filing date of the application.
National Stage of an International Application under 35 U.S.C. 371
If a timely submission to enter the national stage of an international application is compliant with the conditions of 35 U.S.C. 371 and other applicable requirements a Form PCT/DO/EO/903 indicating acceptance of the application as a national stage submission under 35 U.S.C. 371 will be issued in addition to the Filing Receipt, in due course.
New International Application Filed with the USPTO as a Receiving Office
If a new international application is being filed and the international application includes the necessary components for an international filing date (see PCT Article 11 and MPEP 1810), a Notification of the International Application Number and of the International Filing Date (Form PCT/RO/105) will be issued in due course, subject to prescriptions concerning national security, and the date shown on this Acknowledgement Receipt will establish the international filing date of the application.

PART B - FEE(S) TRANSMITTAL

Complete and send this form, together with applicable fee(s), by mail or fax, or via EFS-Web.

By mail, send to: Mail Stop ISSUE FEE
Commissioner for Patents
P.O. Box 1450
Alexandria, Virginia 22313-1450

By fax, send to: (571)-273-2885

INSTRUCTIONS: This form should be used for transmitting the ISSUE FEE and PUBLICATION FEE (if required). Blocks 1 through 5 should be completed where appropriate. All further correspondence including the Patent, advance orders and notification of maintenance fees will be mailed to the current correspondence address as indicated unless corrected below or directed otherwise in Block 1, by (a) specifying a new correspondence address; and/or (b) indicating a separate "FEE ADDRESS" for maintenance fee notifications.

CURRENT CORRESPONDENCE ADDRESS (Note: Use Block 1 for any change of address)

91764 7590 02/13/2019
King & Spalding LLP (Eaton/Cooper)
ATTN: IP Docketing Department
1100 Louisiana Street, Suite 4000
Houston, TX 77002-5213

Note: A certificate of mailing can only be used for domestic mailings of the Fee(s) Transmittal. This certificate cannot be used for any other accompanying papers. Each additional paper, such as an assignment or formal drawing, must have its own certificate of mailing or transmission.

Certificate of Mailing or Transmission

I hereby certify that this Fee(s) Transmittal is being deposited with the United States Postal Service with sufficient postage for first class mail in an envelope addressed to the Mail Stop ISSUE FEE address above, or being transmitted to the USPTO via EFS-Web or by facsimile to (571) 273-2885, on the date below.

Robert T. Neufeld	(Typed or printed name)
/Robert T. Neufeld/	(Signature)
03-29-2019	(Date)

APPLICATION NO.	FILING DATE	FIRST NAMED INVENTOR	ATTORNEY DOCKET NO.	CONFIRMATION NO.
15/811,062	11/13/2017	Steven Walter Pyshos	13682.227107	1254

TITLE OF INVENTION: CONFIGURABLE LIGHTING SYSTEM

APPLN. TYPE	ENTITY STATUS	ISSUE FEE DUE	PUBLICATION FEE DUE	PREV. PAID ISSUE FEE	TOTAL FEE(S) DUE	DATE DUE
nonprovisional	UNDISCOUNTED	$1000	$0.00	$0.00	$1000	05/13/2019

EXAMINER	ART UNIT	CLASS-SUBCLASS
VU, JIMMY T	2844	315-294000

1. Change of correspondence address or indication of "Fee Address" (37 CFR 1.363).

☐ Change of correspondence address (or Change of Correspondence Address form PTO/SB/122) attached.

☒ "Fee Address" indication (or "Fee Address" Indication form PTO/SB/47; Rev 03-09 or more recent) attached. **Use of a Customer Number is required.**

2. For printing on the patent front page, list
(1) The names of up to 3 registered patent attorneys or agents OR, alternatively,
(2) The name of a single firm (having as a member a registered attorney or agent) and the names of up to 2 registered patent attorneys or agents. If no name is listed, no name will be printed.

1 KING & SPALDING LLP
2
3

3. ASSIGNEE NAME AND RESIDENCE DATA TO BE PRINTED ON THE PATENT (print or type)

PLEASE NOTE: Unless an assignee is identified below, no assignee data will appear on the patent. If an assignee is identified below, the document must have been previously recorded, or filed for recordation, as set forth in 37 CFR 3.11 and 37 CFR 3.81(a). Completion of this form is NOT a substitute for filing an assignment.

(A) NAME OF ASSIGNEE: COOPER TECHNOLOGIES COMPANY

(B) RESIDENCE: (CITY and STATE OR COUNTRY): HOUSTON, TEXAS

Please check the appropriate assignee category or categories (will not be printed on the patent) : ☐ Individual ☒ Corporation or other private group entity ☐ Government

4a. Fees submitted: ☒ Issue Fee ☐ Publication Fee (if required) ☐ Advance Order - # of Copies _____

4b. Method of Payment: *(Please first reapply any previously paid fee shown above)*

☒ Electronic Payment via EFS-Web ☐ Enclosed check ☐ Non-electronic payment by credit card (Attach form PTO-2038)

☒ The Director is hereby authorized to charge the required fee(s), any deficiency, or credit any overpayment to Deposit Account No. 110980

5. **Change in Entity Status** (from status indicated above)

☐ Applicant certifying micro entity status. See 37 CFR 1.29

☐ Applicant asserting small entity status. See 37 CFR 1.27

☐ Applicant changing to regular undiscounted fee status.

NOTE: Absent a valid certification of Micro Entity Status (see forms PTO/SB/15A and 15B), issue fee payment in the micro entity amount will not be accepted at the risk of application abandonment.
NOTE: If the application was previously under micro entity status, checking this box will be taken to be a notification of loss of entitlement to micro entity status.
NOTE: Checking this box will be taken to be a notification of loss of entitlement to small or micro entity status, as applicable.

NOTE: This form must be signed in accordance with 37 CFR 1.31 and 1.33. See 37 CFR 1.4 for signature requirements and certifications.

Authorized Signature /Robert T. Neufeld/ Date 03-29-2019

Typed or printed name Robert T. Neufeld Registration No. 48394

PTOL-85 Part B (08-18) Approved for use through 01/31/2020 OMB 0651-0033 U.S. Patent and Trademark Office; U.S. DEPARTMENT OF COMMERCE

UNITED STATES PATENT AND TRADEMARK OFFICE

UNITED STATES DEPARTMENT OF COMMERCE
United States Patent and Trademark Office
Address: COMMISSIONER FOR PATENTS
P.O. Box 1450
Alexandria, Virginia 22313-1450
www.uspto.gov

APPLICATION NO.	ISSUE DATE	PATENT NO.	ATTORNEY DOCKET NO.	CONFIRMATION NO.
15/811,062	05/21/2019	10299335	13682.227107	1254

91764 7590 05/01/2019
King & Spalding LLP (Eaton/Cooper)
ATTN: IP Docketing Department
1100 Louisiana Street, Suite 4000
Houston, TX 77002-5213

ISSUE NOTIFICATION

The projected patent number and issue date are specified above.

Determination of Patent Term Adjustment under 35 U.S.C. 154 (b)
(application filed on or after May 29, 2000)

The Patent Term Adjustment is 0 day(s). Any patent to issue from the above-identified application will include an indication of the adjustment on the front page.

If a Continued Prosecution Application (CPA) was filed in the above-identified application, the filing date that determines Patent Term Adjustment is the filing date of the most recent CPA.

Applicant will be able to obtain more detailed information by accessing the Patent Application Information Retrieval (PAIR) WEB site (http://pair.uspto.gov).

Any questions regarding the Patent Term Extension or Adjustment determination should be directed to the Office of Patent Legal Administration at (571)-272-7702. Questions relating to issue and publication fee payments should be directed to the Application Assistance Unit (AAU) of the Office of Data Management (ODM) at (571)-272-4200.

APPLICANT(s) (Please see PAIR WEB site http://pair.uspto.gov for additional applicants):

Cooper Technologies Company, Houston, TX;
Steven Walter Pyshos, Peachtree City, GA;
Raymond Janik, Fayetteville, GA;
Kevin Roy Harpenau, Atlanta, GA;

The United States represents the largest, most dynamic marketplace in the world and is an unparalleled location for business investment, innovation, and commercialization of new technologies. The USA offers tremendous resources and advantages for those who invest and manufacture goods here. Through SelectUSA, our nation works to encourage and facilitate business investment. To learn more about why the USA is the best country in the world to develop technology, manufacture products, and grow your business, visit SelectUSA.gov.

IR103 (Rev. 10/09)