DIP SWITCH ADE, ADF & ADP SERIES

ALCOSWITCH

TE Connectivity's (TE) ALCOSWITCH DIP switch ADE, ADF and ADP series are designed for space-saving and streamlined manufacturing with high contact pressure allowing for aqueous cleaning without the need for tape sealing.

The ADE, ADF and ADP series are available in through-hole and surface-mount options. Style of actuators are based on series: ADE with extended actuators, ADF with flush actuators and ADP with piano actuators. ADE/ADF/ADP are available in both tube and tape/reel packaging options.

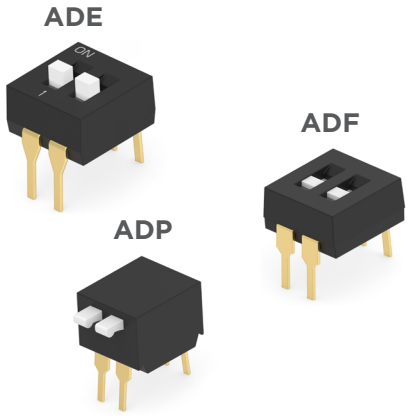

BENEFIT

- Raised (extended), recessed (flush) or side (piano) actuators for design flexibility
- Through-hole & surface mounted (Gull-wing and J-Lead) options available
- Extremely high contact pressure system allows aqueous or solvent cleaning without tape seal
- Gold contact plating for high reliability and corrosion resistance
- Tape and reel packaging available for quick pick-and-place assembly

ELECTRICAL

- Max Current switching: 100mA @ 5VDC / 25mA @ 24VDC
- Min Current switching: 0.1microA @ 1mVDC
- Max Current non-switching: 1A @ 5VDC
- Contact resistance: 50 milliohm max
- Dielectric strength: 300 VAC for 1 minute

APPLICATION

- Industrial and automated control boards
- Fire and security systems
- Thermostats
- Elevator/Escalator
- Telecommunication devices

MECHANICAL

- Actuator force: 800 gf max
- Actuator travel: 1.3 mm for ADE/ADF, 25(degrees) for ADP
- Life cycles: 1,000 cycles
- Operating temperature: -30˚ C to +85˚ C
- Storage temperature: -40˚ C to +85˚ C

MATERIALS

- Base/Cover: PPS (UL94-VO), black
- Contact: Cu alloy, Au flash over nickel
- Terminal: Cu alloy, Au flash over nickel
- Actuator: PA6T (UL94 V-O), White

Signify Ex. 2033
Luminex v. Signify
IPR2024-00101

ADE Dimension

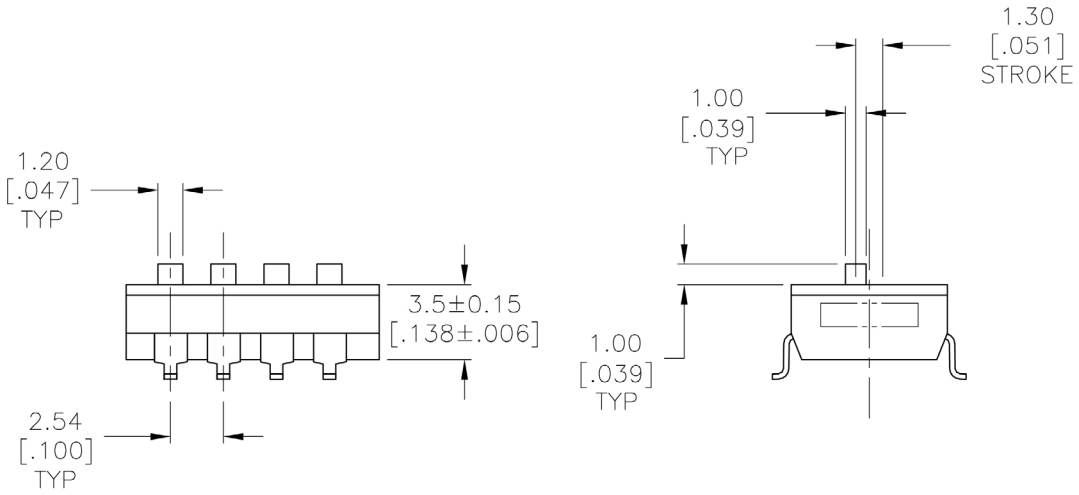

ADF Dimension

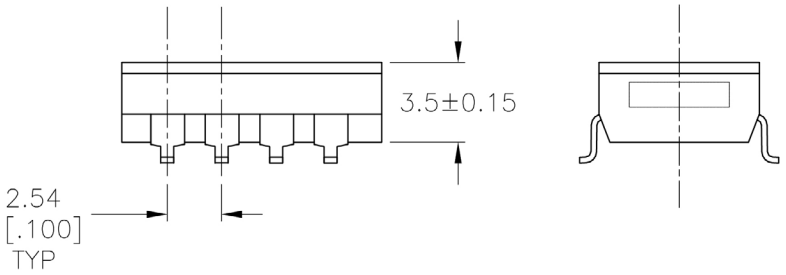

ADP Dimension

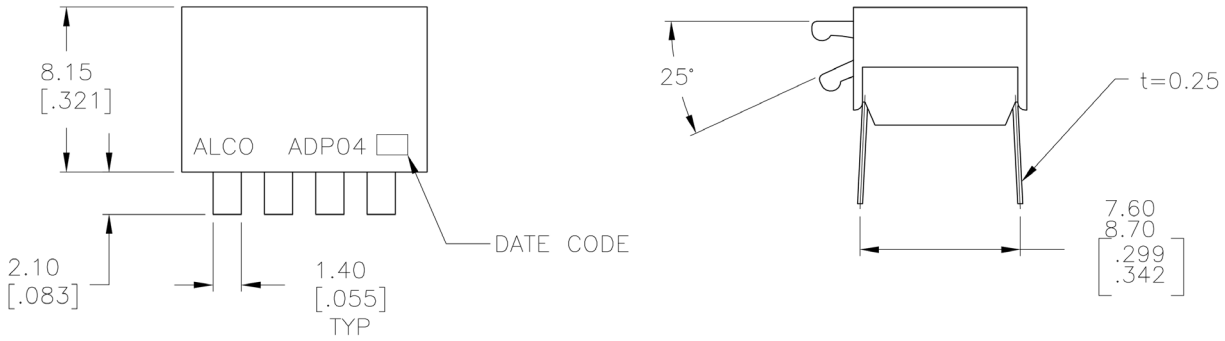

ADE ORDERING INFORMATION

Part Description
ADE __ __ __

Number of Positions

xx	02 to 12

Terminal Style

Blank	Through hole
S	Surface mount gullwing
SA	Surface mount J-Lead

Material compliance

04	RoHS compliant

2 - Positions Example

Part Number	Part Description	Positions	Mounting Style	Actuator Style	Packaging
1825057-1	ADE0204	2	Through hole	Extended	Blank - Tube
1825058-1	ADE02S04	2	SMT - Gullwing	Extended	Blank - Tube
1825058-2	ADE02SA04	2	SMT - J-Lead	Extended	Blank - Tube
3-1825058-2	ADE02STR04	2	SMT - Gullwing	Extended	TR - Tape/Reel

ADF ORDERING INFORMATION

Part Description
ADF__ __ __ __ __

Number of Positions

xx	02 to 12

Terminal Style

Blank	Through hole
S	Surface mount gullwing
SA	Surface mount J-Lead

Sealing:

Blank	No tape
T	Tape seal

Material compliance

04	RoHS compliant

Packaging

Blank	Tube
TR	Tape and reel

2 - Positions Example

Part number	Part Description	Positions	Mounting Style	Actuator Style	Packaging
1825002-1	ADF0204	2	Through hole	Flush	Tube
1825059-1	ADF02S04	2	SMT - Gullwing	Flush	Tube
1825059-2	ADF02SA04	2	SMT - J-Lead	Flush	Tube
1825059-4	ADF02SATTR04	2	SMT - J-Lead	Flush	Tape / Reel

ADP ORDERING INFORMATION

Part Description
ADP__ __ __ __ __

ON Positions

Blank	Lever down
A	Lever up

Number of Positions

xx	02 to 10

Terminal Style

Blank	Through hole*
S	Surface mount gullwing*
SA	Surface mount J-Lead

Material compliance

04	RoHS compliant

Packaging:

Blank	Tube
TR	Tape and reel

2 - Positions Example

Part number	Part Description	Positions	Mounting Style	Actuator Style	Packaging
1571999-1	ADP0204	2	Through hole*	Piano	Tube
1571999-2	ADP02S04	2	SMT - Gullwing*	Piano	Tube
1571999-4	ADP02STR04	2	SMT - Gullwing*	Piano	Tape / Reel

* Prefered parts

te.com

©2023 TE Connectivity. All Rights Reserved.

TE Connectivity, TE Connectivity (logo) and Every Connection Counts are trademarks. All other logos, products and/or company names referred to herein might be trademarks of their respective owners.

The information given herein, including drawings, illustrations and schematics which are intended for illustration purposes only, is believed to be reliable. However, TE Connectivity makes no warranties as to its accuracy or completeness and disclaims any liability in connection with its use. TE Connectivity's obligations shall only be as set forth in TE Connectivity's Standard Terms and Conditions of Sale for this product and in no case will TE Connectivity be liable for any incidental, indirect or consequential damages arising out of the sale, resale, use or misuse of the product. Users of TE Connectivity products should make their own evaluation to determine the suitability of each such product for the specific application.

02/23 ED