Filed on behalf of: Signify Holdings B.V.

UNITED STATES PATENT AND TRADEMARK OFFICE

BEFORE THE PATENT TRIAL AND APPEAL BOARD

LUMINEX INTERNATIONAL COMPANY LTD.,
and MENARD, INC.,
Petitioners,

v.

SIGNIFY HOLDINGS B.V.,
Patent Owner.

Case IPR2024-00101
U.S. Patent No. 10,299,336

PATENT OWNER'S NOTICE OF CROSS-APPEAL

Notice is hereby given, pursuant to 37 C.F.R. § 90.2(a), that Patent Owner Signify Holdings B.V. ("Patent Owner" or "Signify") hereby cross-appeals to the United States Court of Appeals for the Federal Circuit under 35 U.S.C. §§ 141 and 142 from the Final Written Decision of the Patent Trial and Appeal Board ("Board") entered on August 13, 2025 (Paper No. 47), and from all underlying orders, decisions, opinions and rulings adverse to Patent Owner. Petitioner Luminex International Co., Ltd. ("Luminex") filed a Notice of Appeal in this case on September 10, 2025.[1] A copy of the Final Written Decision is attached as **Exhibit A**.

---

[1] On September 15, 2025, the USPTO dismissed Signify's Request for Director Review of the Final Written Decision (Dkt. 49 which was timely filed within 30 days of the Board decision) because the USPTO determined that "the Office lack[ed] jurisdiction to decide Patent Owner's Request …" in view of Luminex's Notice of Appeal. Ex. 3102. Signify has filed with the Court of Appeals for the Federal Circuit a motion to stay and remand Luminex's appeal for purposes of allowing the Director to consider Signify's Request for Director Review. CAFC No. 25-2093, Dkt. 6-1. The Federal Circuit has not yet decided that motion, and the due date for Signify to seek appellate review of the Final Written Decision is approaching. Accordingly, while Signify believes the proper course of action here

In accordance with 37 C.F.R. § 90.2(a)(3)(ii), the expected issues on cross-appeal include, but are not limited to:

1. the Board's determination that Luminex's petition for *inter partes* review is not barred under 35 U.S.C. § 315(a);

2. the Board's determination that Luminex's petition for *inter partes* review is not barred under 35 U.S.C. § 315(b);

3. the USPTO's determination that it lacked jurisdiction to consider Signify's Request for Director Review of the Final Written Decision;

4. whether this proceeding and the Final Written Decision issued therein are constitutional under *Arthrex v. United States*, 594 U.S. 1 (2021);

5. whether the Final Written Decision complies with the requirements of the Administrative Procedure Act and whether it otherwise permits meaningful judicial review;

6. the Board's determination that Luminex has shown, by a preponderance of the evidence, that claims 1, 3, 6, 7, 9, 11, 12, 18, and 19 of U.S.

---

is a remand, it is filing the present Notice of Cross-Appeal out of an abundance of caution and to protect its rights to appellate review in the event the Federal Circuit does not grant Signify's motion for remand.

Patent No. 10,299,336 ("'336 Patent") are unpatentable under 35 U.S.C. § 103 over U.S. Patent No. 10,234,091 (Chaimberg);

7. the Board's determination that Luminex has shown, by a preponderance of the evidence, that claims 2, 4, 5, 10, 14, and 20 of the '336 Patent are unpatentable under 35 U.S.C. § 103 over Chaimberg and U.S. Patent No. 7,178,941 (Roberge);

8. the Board's determination that Luminex has shown, by a preponderance of the evidence, that claims 13 and 15 of the '336 Patent are unpatentable under 35 U.S.C. § 103 over U.S. Patent No. 7,192,160 (Reiff),

9. the Board's consideration of (and failures to consider) the expert testimony, prior art, and other evidence in the record, and failure to consider such evidence as a whole; and

10. the Board's factual findings, conclusions of law or other determinations supporting or relating to the aforementioned issues, including the Board's application of the applicable burdens of proof and production and its application of the law of obviousness,

along with any finding or determination, including, but not limited to, claim construction, supporting or related to those issues, as well as all other issues decided adversely to Patent Owner in any orders, decisions, opinions and rulings.

A copy of this Notice of Cross-Appeal is being concurrently filed with the Board. In addition, a copy of this Notice of Cross-Appeal, along with the required docketing fees, are being filed with the Clerk's Office for the United States Court of Appeals for the Federal Circuit.

Respectfully submitted,

October 13, 2025

/Justin J. Oliver/

Justin J. Oliver (Reg. No. 44,986)
Venable LLP
600 Massachusetts Avenue, NW
Washington, D.C. 20001
Tel: (202) 721-5423

CERTIFICATE OF FILING

I certify that, in addition to being electronically filed with the Patent and Trial Board, the original version of the foregoing Patent Owner's Notice of Cross-Appeal was filed by email with the Director of the United States Patent and Trademark Office at efileSO@uspto.gov.

I certify that a true and correct copy of the foregoing Patent Owner's Notice of Cross-Appeal was filed electronically with the Clerk's Office of the United States Court of Appeals for the Federal Circuit on this 13th day of October, 2025.

CERTIFICATE OF SERVICE

I certify that a copy of the foregoing was served on Petitioners by causing it to be sent by email to counsel for Petitioners at the following email addresses:

jrnightingale@jonesday.com
wdevitt@jonesday.com
vkhatri@jonesday.com
jmessing@jonesday.com
cjmeyer@uspatent.com
scollins@uspatent.com

Respectfully submitted,

October 13, 2025

/Justin Oliver/

Justin J. Oliver (Reg. No. 44,986)
Venable LLP
Tel: (202) 721-5423

EXHIBIT A

Trials@uspto.gov
Tel: 571-272-7822

Paper 47
Date: August 13, 2025

UNITED STATES PATENT AND TRADEMARK OFFICE

BEFORE THE PATENT TRIAL AND APPEAL BOARD

LUMINEX INTERNATIONAL CO., LTD.
and MENARD, INC.,
Petitioner,[1]

v.

SIGNIFY HOLDINGS B.V.,
Patent Owner.

IPR2024-00101
Patent 10,299,336 B2

Before CHRISTOPHER M. KAISER, KEVIN C. TROCK, and STEVEN M. AMUNDSON, *Administrative Patent Judges*.

AMUNDSON, *Administrative Patent Judge*.

JUDGMENT
Final Written Decision
Determining Some Challenged Claims Unpatentable
35 U.S.C. § 318(a)

Granting Patent Owner's Unopposed Motion to Seal
37 C.F.R. §§ 42.14, 42.54

[1] Menard, Inc. filed a petition and a motion for joinder in IPR2024-01469 and has been joined as a petitioner in this proceeding.

I. INTRODUCTION

We have jurisdiction under 35 U.S.C. § 6. We issue this Final Written Decision under 35 U.S.C. § 318(a) and 37 C.F.R. § 42.73.

This Final Written Decision addresses challenges to claims 1–20 in U.S. Patent No. 10,299,336 B2 ("the '336 patent") (Exhibit 1001). For the reasons explained below, a preponderance of the evidence shows that claims 1–7, 9–15, and 18–20 in the '336 patent are unpatentable and does not show that claims 8, 16, and 17 are unpatentable. *See* 35 U.S.C. § 316(e) (2024).

II. BACKGROUND

A. Related Matter

The following civil action is a related matter involving the '336 patent: *Signify North America Corp. et al. v. Menard, Inc.*, No. 3:22-cv-00706 (W.D. Wis. filed Aug. 12, 2022) (the "Wisconsin case"). *See* Ex. 2003 (Complaint for Patent Infringement filed Aug. 12, 2022).

B. Procedural Background

On October 25, 2023, Luminex International Co., Ltd. ("Luminex" or "Petitioner") filed a Petition requesting an *inter partes* review of claims 1–20 in the '336 patent under 35 U.S.C. §§ 311–319. Paper 1 ("Pet.").

On February 22, 2024, Signify Holdings B.V. ("Signify" or "Patent Owner") filed a Preliminary Response. Paper 6 ("Prelim. Resp."). In the Preliminary Response, Patent Owner argued that the Board should deny institution for several reasons. *See id.* at 9–34. Among other things, Patent Owner contended that § 315(b) bars institution because:

(1) Petitioner filed the Petition on October 25, 2023, more than one year after Patent Owner served Menard, Inc. ("Menard") with a complaint for patent infringement in the Wisconsin case; and

(2) Menard is "at least one of" a real party in interest and a privy of Petitioner.

Id. at 21; *see id.* at 3–4, 26; 35 U.S.C. § 315(b).

On March 8, 2024, after receiving Board authorization to address certain issues, Petitioner filed a Preliminary Reply. Paper 8 ("Prelim. Reply"); *see* Paper 7 (Order). In the Preliminary Reply, Petitioner disputed that Menard is "at least one of" a real party in interest and a privy of Petitioner. *See* Prelim. Reply 1–7.

On March 15, 2024, Patent Owner filed a Preliminary Sur-reply. Paper 9 ("Prelim. Sur-reply").

On May 9, 2024, the panel issued a decision denying institution based on § 315(b) because the panel determined that (1) Menard is a real party in interest in this proceeding and (2) Petitioner filed the Petition more than one year after the date on which Menard was served with a complaint alleging infringement of the '336 patent. Paper 10, 35–42. The panel did not reach the question whether Menard is a privy of Petitioner. *Id.* at 42.

On June 6, 2024, Petitioner requested Director review of the panel's decision denying institution. Paper 11. Among other things, Petitioner asserted that the panel erred in determining that Menard is a real party in interest in this proceeding. *See id.* at 4–15.

On August 20, 2024, the Director granted Petitioner's request and vacated the panel's decision denying institution. Paper 12, 6. Among other things, the Director determined based on a "review of the current record" that (1) Menard is not a real party in interest in this proceeding and (2) Menard is not a privy of Petitioner. *Id.* at 5. Further, the Director remanded the case to the panel and instructed the panel "to determine

whether the Petition presents a reasonable likelihood of prevailing with respect to at least one of the challenged claims under 35 U.S.C. § 314(a), and to determine whether to institute *inter partes* review accordingly." *Id.* at 5–6.

On September 9, 2024, the panel instituted an *inter partes* review of claims 1–20 in the '336 patent on all challenges included in the Petition because the panel determined that the Petition presents a reasonable likelihood of prevailing with respect to at least one of the challenged claims. Paper 14 ("Inst. Dec.").

On September 23, 2024, in IPR2024-01469 Menard filed a petition substantively identical to the Petition in this proceeding and a motion for joinder seeking joinder as a party in this proceeding. *Menard, Inc. v. Signify Holdings B.V.*, IPR2024-01469, Papers 1–2 (PTAB Sept. 23, 2024).

On November 14, 2024, after receiving Board authorization, Patent Owner filed a motion for additional discovery relating to the real-party-in-interest issue. Paper 18; *see* Paper 19 (Proposed Requests for Production); Ex. 3005.

On November 21, 2024, the Director issued a supplemental opinion setting forth the analysis and reasons for granting Director review. Paper 20 ("Suppl. Op."). Among other things, the Director determined that:

(1) "there is no evidence on this record of control, funding, or substantial coordination between Petitioner and Menard to file the Petition";

(2) "the fact that Menard desires to be free from infringement liability does not establish that the Petition was filed at Menard's behest";

(3) "Petitioner's filing of the Petition after Menard's requests for indemnification likewise does not establish that the Petition was filed at Menard's behest";

(4) "Petitioner and Menard understood the Agreement to, at most, create obligations to indemnify and defend in the district court litigation (without mention of any proceedings before the Office)"; and

(5) "the overlap of asserted challenges in the IPR and the joint invalidity contentions in district court do not show that Menard desires review of the '336 patent."

Id. at 15–16.

The Director also determined that "there is no evidence that Petitioner filed the IPR *because of* or *in response to* any request by Menard to do so." Suppl. Op. 16 (emphases in original). The Director explained that "the evidence at most shows that Menard requested indemnification in district court." *Id.*

Additionally, the Director determined that Menard is not a privy of Petitioner. Suppl. Op. 8, 22–24. The Director explained that:

(1) the evidence to date did not establish that Petitioner acted as a proxy for Menard in this proceeding;

(2) the evidence to date did not establish that "Menard requested, controlled, or funded Petitioner's IPR";

(3) "Petitioner and Menard are parties to a standard, non-exclusive, manufacturer-customer indemnification agreement relating to patent infringement"; and

(4) "Menard's unilateral requests for indemnification and defense, without more, do not support a finding that Menard is a privy of Petitioner."

Id. at 22–23; *see id.* at 11–20.

On November 21, 2024, Petitioner filed an opposition to Patent Owner's motion for additional discovery. Paper 23.

On December 11, 2024, the panel issued an order denying Patent Owner's motion for additional discovery. Paper 26. The panel determined that the factors set forth in *Garmin International, Inc. v. Cuozzo Speed Technologies LLC*, IPR2012-00001, Paper 26 at 6–7 (PTAB Mar. 5, 2013) (precedential), did not indicate that the proposed additional discovery was "necessary in the interest of justice." *Id.* at 34; *see id.* at 13–34.

On December 23, 2024, Patent Owner filed a Response to the Petition. Paper 29. On the same day, Patent Owner filed an Unopposed Motion to Seal the Response and two exhibits (Exhibits 2046 and 2047) that were (1) produced in the Wisconsin case with the designation "Attorneys Eyes Only," (2) submitted with the Response, and (3) quoted in the Response. *See* Paper 28.

On January 14, 2025, Patent Owner filed a public version of the Response. Paper 31 ("Resp.").

On February 14, 2025, the panel (1) instituted an *inter partes* review in IPR2024-01469, (2) granted Menard's motion for joinder in IPR2024-01469, and (3) joined Menard as a party in this proceeding. Paper 34, 19–20; IPR2024-01469, Paper 8 at 19–20.

On March 24, 2025, Petitioner filed a Reply to Patent Owner's Response. Paper 35 ("Reply"). According to Petitioner, "Menard had no involvement" with the Reply. *Id.* at 1 n.1 (emphasis omitted). Menard did not submit a paper addressing Patent Owner's Response.

On May 5, 2025, Patent Owner filed a Sur-reply to Petitioner's Reply. Paper 41 ("Sur-reply").

On June 11, 2025, we held an oral hearing. The record includes the hearing transcript. Paper 45 ("Tr.").

On June 30, 2025, after receiving Board authorization, Patent Owner filed a supplemental brief relating to the effective filing date for claims 13, 15, and 16 in the '336 patent. Paper 44; *see* Ex. 3008.

On July 3, 2025, Petitioner filed a supplemental response brief relating to the effective filing date for claims 13, 15, and 16 in the '336 patent. Paper 46.

C. Identified Real Parties in Interest

Petitioner identifies itself as the sole real party in interest. Pet. 89. Patent Owner identifies the following entities as real parties in interest: Signify Holdings B.V. and Signify North America Corp. Paper 4, 2. In IPR2024-01469, Menard identified itself as the sole real party in interest. IPR2024-01469, Paper 1 at 89.

D. The '336 Patent (Exhibit 1001)

The '336 patent, titled "Configurable Lighting System," issued on May 21, 2019, from U.S. patent application no. 16/014,394 ("the '394 application") filed on June 21, 2018. Ex. 1001, codes (22), (45), (54). The '394 application is a continuation-in-part of U.S. patent application no. 15/811,062 ("the '062 application") filed on November 13, 2017, and later issued as U.S. Patent No. 10,299,335 B2 (Exhibit 1023). *Id.* at 1:5–7, code (63). The '062 application is a continuation of U.S. patent application no. 15/435,141 ("the '141 application") filed on February 16, 2017, and later issued as U.S. Patent No. 9,820,350 B2 (Exhibit 1009). *Id.* at 1:5–10, code (63). The '336 patent claims the benefit of priority to U.S. provisional

application no. 62/297,424 ("the '424 provisional") filed on February 19, 2016. *Id.* at 1:5–13, code (60).

The '336 patent states that "the technology relate[s] generally to lighting systems and more specifically to lighting systems that can be readily configured to produce illumination of different color temperatures." Ex. 1001, 1:19–22.

The '336 patent explains that luminaires incorporating incandescent or fluorescent technology provide some flexibility to meet user preferences through lamp selection "in terms of correlated color temperature (CCT or color temperature) and light output (lumen output)." Ex. 1001, 1:31–36. The patent also explains that "light emitting diodes (LEDs) offer substantial potential benefit associated with their energy efficiency, light quality, and compact size." *Id.* at 1:26–28.

According to the '336 patent, however, "conventional light-emitting-diode-based luminaires typically offer reduced flexibility when the luminaire's light-emitting-diode-based light source is permanently attached to the luminaire." Ex. 1001, 1:42–45. For instance, "[s]tocking conventional light-emitting-diode-based luminaires at distribution to accommodate multiple configurations that users may desire can entail maintaining a relatively large or cumbersome inventory." *Id.* at 1:45–49.

The '336 patent identifies a need for a light-emitting-diode system "that can adapt to various applications, for example by delivering multiple color temperatures, multiple lumens, and/or multiple photometric distributions" so that "a single luminaire [may] be stocked at distribution and then quickly configured according to application parameters and deployment dictates." Ex. 1001, 1:50–57. The '336 patent endeavors to address that

need by providing a luminaire including a housing, an electrical cable, and a switch coupled to the electrical cable with the switch "disposed remotely from the housing" and having "multiple positions" such that "each position of the switch corresponds to a discrete correlated color temperature (CCT) output by one or more light sources of the luminaire." *Id.* at code (57).

The '336 patent's Figure 8 (reproduced below) depicts a luminaire "currently known in the art":

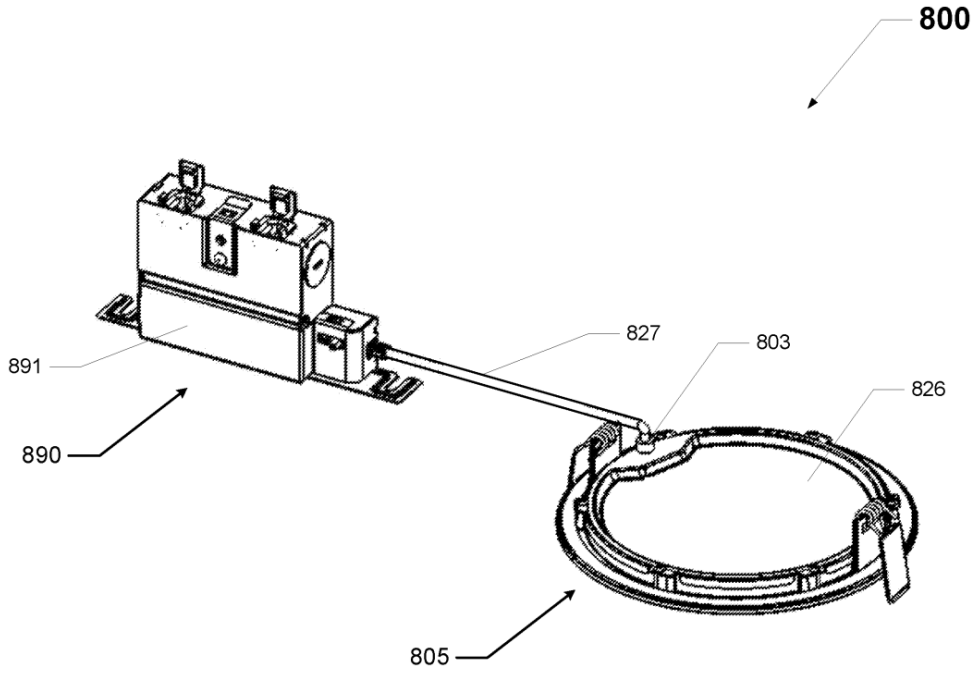

FIG. 8
(PRIOR ART)

Figure 8 illustrates "currently known" luminaire 800 with the following components:

- low-profile housing 805 having wiring aperture 803 in cover 826;
- electrical cable 827 extending through wiring aperture 803 in cover 826 and including "one or more electrical conductors to transfer power, control,

communication, data, and/or any other type of electrical signals"; and

- junction box 890 located remotely from housing 805 and including "one or more walls 891 to enclose one or more electrical components (e.g., a driver)."

Ex. 1001, 3:24–25, 10:66–11:9, Fig. 8. The "electrical cable 827 electrically couples one or more electrical components in the junction box 890 with one or more electrical components in or on the housing 805," such as light sources. *Id.* at 11:9–12, 11:17–20, Fig. 8.

The '336 patent's Figure 9B (reproduced below) depicts a luminaire with a switch according to "certain example embodiments":

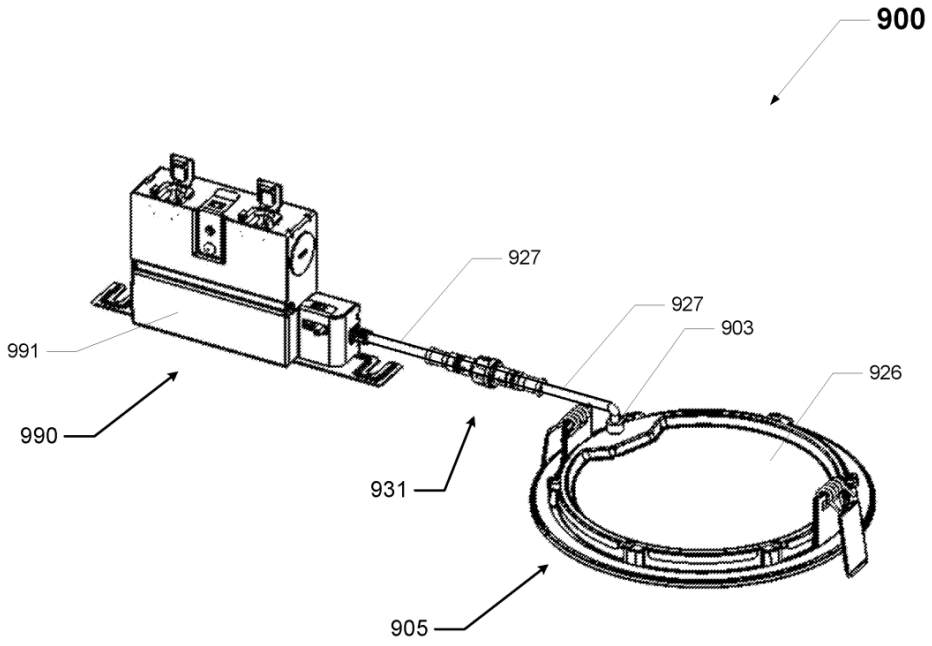

FIG. 9B

Figure 9B illustrates luminaire 900 with the following components:

- low-profile housing 905 having wiring aperture 903 in cover 926;

- electrical cable 927 extending through wiring aperture 903 in cover 926 and including "one or more electrical conductors to transfer power, control, communication, data, and/or any other type of electrical signals";
- switch 931 located "outside of the housing 905" and "in-line with the electrical cable 927"; and
- junction box 990 located remotely from housing 905 and including "one or more walls 991 to enclose one or more electrical components (e.g., a driver)."

Ex. 1001, 3:26–27, 11:30–38, 11:44–47, 11:63–66, 12:21–23, Fig. 9B. Luminaire 900 in Figure 9B "is substantially the same as" luminaire 800 in Figure 8 except that luminaire 900 "includes the example switch 931." *Id.* at 11:25–29.

Housing 905 of luminaire 900 "can be installed in or on any of a number of structure members (e.g., drywall that forms a ceiling, a ceiling tile)" with junction box 990 "located behind the ceiling." Ex. 1001, 11:42–45. When housing 905 "is mounted in its installed location (e.g., the ceiling), the entire electrical cable 927 (and so also the switch 931) is behind the structure member (e.g., ceiling) and is inaccessible." *Id.* at 11:51–56. When housing 905 "is removed from its installed location, the junction box 990 and the electrical cable 927 (and so also the switch 931) can be accessible." *Id.* at 11:58–60.

Switch 931 "can have one or more coupling features (e.g., terminal points) that are used to couple to one or more electrical conductors of one or more electrical cables 927." Ex. 1001, 11:67–12:3. Coupling features include "pins," e.g., "disposed on the bottom of" the switch body, that

permit the switch "to become electrically coupled to an electrical connector." *Id.* at 9:65–10:1.

Switch 931 "can have an actuator having multiple positions." Ex. 1001, 12:3–5. Switch 931 "can have a range of selections that are either continuous or discrete." *Id.* at 12:16–17.

As examples of switch 931, the '336 patent discloses a wide variety of devices as follows:

> an inline pin switch, multiple DIP [dual inline pin] switches, one or more single in-line pin packages (SIP or SIPP), one or more rocker switches, one or more reed switches, one or more magnetic switches, one or more rotary switches, one or more rotary dials, one or more selectors or selector switches, one or more slide switches, one or more snap switches, one or more thumbwheels, one or more toggles or toggle switches, one or more keys or keypads, or one or more buttons or pushbuttons.

Ex. 1001, 12:6–15.

The ’336 patent’s Figure 10 (reproduced below) depicts a luminaire with a switch according to “certain example embodiments”:

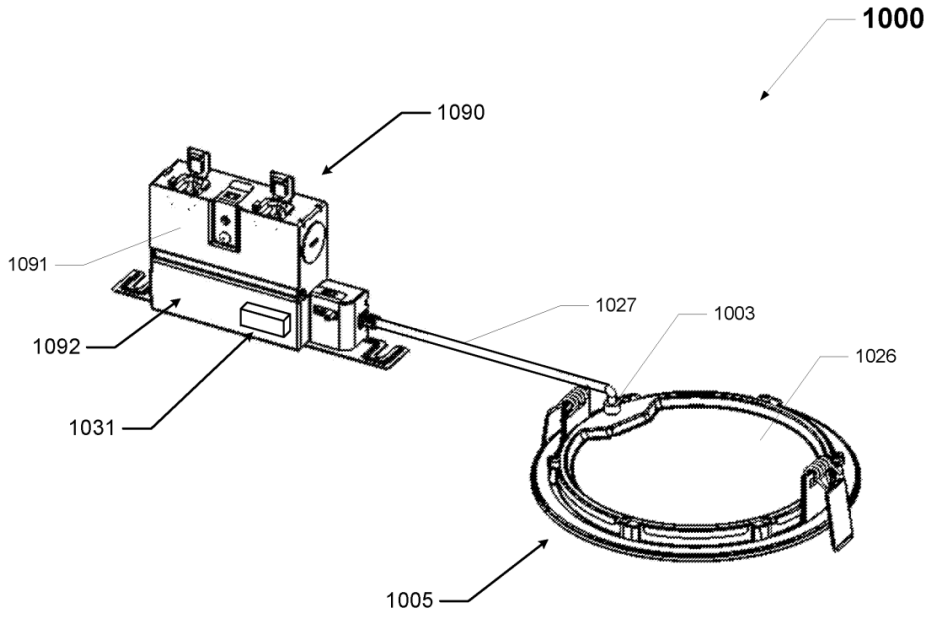

FIG. 10

Figure 10 illustrates luminaire 1000 with the following components:

- low-profile housing 1005 having wiring aperture 1003 in cover 1026;
- electrical cable 1027 extending through wiring aperture 1003 in cover 1026 and including “one or more electrical conductors to transfer power, control, communication, data, and/or any other type of electrical signals”;
- switch 1031; and
- junction box 1090 located remotely from housing 1005 and including “one or more walls 1091” that form cavity 1092 “to enclose one or more electrical components (e.g., a driver, the switch 1031).”

Ex. 1001, 3:28–29, 12:40–49, 12:56–61, Fig. 10. In Figure 10, “one of the walls of the junction box 1090 is removed to show the switch 1031 disposed

within the cavity 1092 formed by the walls 1091 of the junction box 1090." *Id.* at 12:58–61, Fig. 10. Luminaire 1000 in Figure 10 "is substantially the same as" luminaire 900 in Figure 9 except that switch 1031 in luminaire 1000 "is in a different location separate from the housing 1005." *Id.* at 12:35–39.

As alternatives to the arrangement shown in Figure 10, "rather than being disposed within the cavity 1092 of the junction box 1090, the switch 1031 can be disposed on a wall 1091 of the junction box 1090 or remotely from the junction box 1090 as well as remotely from the housing 1005 of the luminaire 1000." Ex. 1001, 13:13–19.

The '336 patent explains that a luminaire "can comprise a 3,000 K group of light emitting diodes and a 4,000 K group of light emitting diodes."[2] Ex. 1001, 3:57–59. If so, the luminaire can deliver (1) 3,000 K illumination when "only the 3,000 K group is on," (2) 4,000 K illumination when "only the 4,000 K group is on," and (3) 3,500 K illumination when "the 3,000 K group and the 4,000 K group are both on." *Id.* at 3:59–63. Further, if "the 4,000 K group of light emitting diodes is concurrently operated at a low lumen output and the 3,000 K group is operated at a high lumen output, the luminaire may deliver illumination of another selected color temperature, for example 3,100 K." *Id.* at 3:63–67.

---

[2] "K represents Kelvin which is a measure of temperature similar to Fahrenheit and Celsius." Ex. 1004 ¶ 32. "Lower color temperatures generally indicate white light having a more significant red component or a 'warmer feel,' while higher color temperatures generally indicate white light having a more significant blue component or a 'cooler feel.'" Ex. 1011, 10:18–22.

E. The Challenged Claims

The ’336 patent includes twenty claims as follows:

- independent claim 1 for a “luminaire”;
- claims 2–12 that depend directly or indirectly from claim 1;
- independent claim 13 for a “switch for controlling a correlated color temperature (CCT) of light emitted by a luminaire”; and
- claims 14–20 that depend directly or indirectly from claim 13.

Ex. 1001, 14:31–16:27. Petitioner challenges all twenty claims in the ’336 patent. Pet. 15–89.

Claim 1 exemplifies the challenged claims and reads as follows (with formatting added for clarity and with bracketed numbers and letters added for reference purposes):[3]

1. A luminaire comprising:

[1a] a housing comprising at least one outer surface that forms a first cavity;

[1b] at least one electrical component disposed, at least in part, within the first cavity;

[1c] an electrical cable comprising a first end and a second end, wherein the first end is coupled to the at least one electrical component; and

[1d] a switch coupled to the electrical cable, wherein the switch is disposed remotely from the housing,

[1e] wherein the switch has a plurality of positions, wherein each position of the plurality of positions of the switch

[3] We use the same reference numbers and letters that Petitioner uses to identify the claim language. *See* Pet. 23–30.

> corresponds to a discrete correlated color temperature (CCT) output by one or more light sources of the luminaire.

Ex. 1001, 14:31–45.

F. The Asserted References

For its challenges, Petitioner relies on the following references:

Name	Reference	Exhibit
Chaimberg	US 10,234,091 B1, issued March 19, 2019 (based on an application filed April 27, 2018)	1003
Roberge	US 7,178,941 B2, issued February 20, 2007 (based on an application filed May 5, 2004)	1011
Halliwell	US 9,801,250 B1, issued October 24, 2017 (based on an application filed September 23, 2016)	1012
Reiff	US 7,192,160 B2, issued March 20, 2007 (based on an application filed July 12, 2004)	1013

Pet. 15–89. Petitioner asserts that each reference qualifies as prior art "under at least 35 U.S.C. § 102(a)(2)." *Id.* at 16, 47, 60, 82; *see* 35 U.S.C. § 102(a)(2).[4]

As discussed in more detail below, Patent Owner disputes that Chaimberg and Halliwell qualify as prior art for claims 13, 15, and 16. *See* Resp. 10–26, 30–31, 44; Sur-reply 2–8; *infra* §§ IV.E.2(a), IV.E.3(a), IV.E.4(a).

[4] The Leahy-Smith America Invents Act ("AIA"), Pub. L. No. 112-29, 125 Stat. 284 (2011), amended 35 U.S.C. § 102 and § 103 effective March 16, 2013. Because Patent Owner identifies February 19, 2016, as the earliest effective filing date for any of the challenged claims, this Final Written Decision refers to the AIA versions of § 102 and § 103. But our analysis would not change under the pre-AIA versions of § 102 and § 103.

G. The Asserted Challenges to Patentability

Petitioner asserts the following challenges to patentability:

Claim(s) Challenged	35 U.S.C. §	Reference(s)/Basis
1, 3, 6–9, 11–13, 15, 17–19	102 or 103	Chaimberg
2, 4, 5, 10, 14, 16, 20	103	Chaimberg, Roberge
13, 15	102 or 103	Reiff
1, 2–5, 7, 9–13, 15, 16, 19, 20	102 or 103	Halliwell

Pet. 15–89.

H. Testimonial Evidence

To support its challenges, Petitioner relies on (1) the Declaration of J. Gary Eden (Exhibit 1004) and (2) the Declaration of Dr. J. Gary Eden in Support of Petitioner's Reply (Exhibit 1027). Dr. Eden states, "I received the B.S. degree in Electrical Engineering from the University of Maryland (College Park) in 1972, the M.S. degree in Electrical Engineering in from the University of Illinois (Urbana) in 1973, and the Ph.D. degree in Electrical Engineering from the University of Illinois in 1976." Ex. 1004 ¶ 6. Dr. Eden also states, "Over the past 51 years, my work has centered on research in, and the development of, light-emitting devices including LEDs, lasers, and lamps." *Id.* ¶ 13.

To support its positions, Patent Owner relies on the Declaration of Dr. Michael Krames (Exhibit 2031). Dr. Krames states, "I earned a Ph.D. in Electrical Engineering from the University of Illinois Urbana-Champaign" in 1995 "under the supervision of Prof. Nick Holonyak, Jr., the original inventor of the light-emitting diode (LED)." Ex. 2031 ¶ 9. Dr. Krames also states, "I have extensive experience in R&D and manufacturing settings,

creating innovative LEDs and LED-based products for various solid-state lighting applications," and "am a Fellow of the Institute of Electrical and Electronics Engineers (IEEE) and a Fellow of the Illuminating Engineering Society (IES)." *Id.* ¶ 10.

Additionally, Petitioner submits Dr. Krames's deposition testimony, and Patent Owner submits Dr. Eden's deposition testimony. *See* Ex. 1031 (Mar. 13, 2025, Krames Dep. Tr.); Ex. 2030 (Dec. 5, 2024, Eden Dep. Tr.); Ex. 2052 (Apr. 25, 2025, Eden Dep. Tr.).

I. Burden

In an *inter partes* review, a petitioner bears the burden of persuasion to prove "unpatentability by a preponderance of the evidence." *Dynamic Drinkware, LLC v. Nat'l Graphics, Inc.*, 800 F.3d 1375, 1378 (Fed. Cir. 2015) (quoting 35 U.S.C. § 316(e)); *see* 37 C.F.R. § 42.1(d) (2025). A petitioner also bears the burden of persuasion to demonstrate that its petition is not time barred based on a complaint alleging infringement of a patent. *Worlds Inc. v. Bungie, Inc.*, 903 F.3d 1237, 1242 (Fed. Cir. 2018).

III. WHETHER THE PETITION IS TIME BARRED

The parties dispute whether the Petition is time barred based on a complaint alleging infringement of the '336 patent. *See* Resp. 77–82; Reply 34–36; Sur-reply 27–28.

A. Background: Statutory Bar to Institution Under § 315(b)

The AIA precludes institution of an *inter partes* review under certain circumstances. 35 U.S.C. § 315(a)–(b); *see* 37 C.F.R. § 42.101(a)–(b). For instance, § 315(b), titled "Patent Owner's Action," bars institution of an *inter partes* review "if the petition requesting the proceeding is filed more than 1 year after the date on which the petitioner, real party in interest, or

privy of the petitioner is served with a complaint alleging infringement of the patent." 35 U.S.C. § 315(b); *see* 37 C.F.R. § 42.101(b).

Congress included the terms "real party in interest" and "privy" in § 315(b) to serve two related purposes:

> (1) "to ensure that third parties who have sufficiently close relationships with IPR petitioners would be bound by the outcome of instituted IPRs under § 315(e), the related IPR estoppel provision"; and
>
> (2) "to safeguard patent owners from having to defend their patents against belated administrative attacks by related parties via § 315(b)."

Applications in Internet Time, LLC v. RPX Corp., 897 F.3d 1336, 1350 (Fed. Cir. 2018) ("*AIT*"); *see Ventex Co. v. Columbia Sportswear N. Am., Inc.*, IPR2017-00651, Paper 152 at 6 (PTAB Jan. 24, 2019) (precedential).

"Whether a party who is not a named participant in a given proceeding nonetheless constitutes a 'real party-in-interest' or 'privy' to that proceeding is a highly fact-dependent question." PTAB Consolidated Trial Practice Guide at 13 (Nov. 2019) ("CTPG");[5] *see WesternGeco LLC v. ION Geophysical Corp.*, 889 F.3d 1308, 1318 (Fed. Cir. 2018); *Ventex*, IPR2017-00651, Paper 152 at 6.

B. Legal Principles: Real Party in Interest

"Congress intended that the term 'real party in interest' have its expansive common-law meaning." *AIT*, 897 F.3d at 1350–51; *see RPX Corp. v. Applications in Internet Time, LLC*, IPR2015-01750, Paper 128 at 2, 7 (PTAB Oct. 2, 2020) (precedential). "Determining whether a non-party is a 'real party in interest' demands a flexible approach that takes into

[5] Available at https://www.uspto.gov/TrialPracticeGuideConsolidated.

account both equitable and practical considerations, with an eye toward determining whether the non-party is a clear beneficiary that has a preexisting, established relationship with the petitioner." *AIT*, 897 F.3d at 1351; *see Ventex*, IPR2017-00651, Paper 152 at 6; *RPX*, IPR2015-01750, Paper 128 at 6.

The real-party-in-interest analysis should consider the following:

(1) whether a nonparty "desires review of the patent";

(2) "whether a petition has been filed at a nonparty's 'behest'";

(3) "who, from a 'practical and equitable' standpoint, will benefit from the redress that the chosen tribunal might provide";

(4) "the extent to which [the nonparty] has an interest in and will benefit from [the petitioner's] actions"; and

(5) whether the petitioner "can be said to be representing that interest after examining its relationship with" the nonparty.

AIT, 897 F.3d at 1349, 1351, 1353; *see RPX*, IPR2015-01750, Paper 128 at 5, 7–8, 15, 20; CTPG at 14. According to the Federal Circuit, "the heart of the inquiry" concerning a real party in interest should focus on "whether a petition has been filed at a [nonparty's] 'behest.'" *Uniloc 2017 LLC v. Facebook Inc.*, 989 F.3d 1018, 1027–28 (Fed. Cir. 2021) (quoting *AIT*, 897 F.3d at 1351).

A "common consideration" is whether a nonparty "exercised or could have exercised control over a party's participation in a proceeding." CTPG at 16. For example, a nonparty that "funds and directs and controls" an *inter partes* review constitutes a real party in interest even if that entity is not a

privy of the petitioner. *Wi-Fi One, LLC v. Broadcom Corp.*, 887 F.3d 1329, 1336 (Fed. Cir. 2018); *see Uniloc 2017*, 989 F.3d at 1028; CTPG at 17.

C. Legal Principles: Privy of the Petitioner

The term "privity" expresses "the conclusion that nonparty preclusion is appropriate on any ground." *Taylor v. Sturgell*, 553 U.S. 880, 894 n.8 (2008); *see Power Integrations, Inc. v. Semiconductor Components Indus., LLC*, 926 F.3d 1306, 1315 (Fed. Cir. 2019). According to the Board, "[p]rivity is essentially a shorthand statement that collateral estoppel is to be applied in a given case." CTPG at 15.

The privity analysis "seeks to determine 'whether the relationship between the purported "privy" and the relevant other party is sufficiently close such that both should be bound by the trial outcome and related estoppels.'" *WesternGeco*, 889 F.3d at 1318 (quoting *Cal. Physicians' Serv. v. Aoki Diabetes Rsch. Inst.*, 163 Cal. App. 4th 1506, 1521 (Cal. App. 2008)); *see id.* at 1317 n.5; CTPG at 14–15. But "the reach of privity cannot extend beyond the limits of due process." *WesternGeco*, 889 F.3d at 1319; *see Taylor*, 553 U.S. at 891.

The Supreme Court has grouped the exceptions to the rule against nonparty preclusion into six categories as follows:

(1) "[a] person who agrees to be bound by the determination of issues in an action between others is bound in accordance with the terms of his agreement";

(2) "a variety of pre-existing 'substantive legal relationship[s]' between the person to be bound and a party to the judgment," including but not limited to "preceding and succeeding owners of property, bailee and bailor, and assignee and assignor";

(3) a nonparty was "adequately represented by someone with the same interests who [wa]s a party" to an earlier litigation, such as class actions and "suits brought by trustees, guardians, and other fiduciaries";

(4) a nonparty "assume[d] control" over an earlier litigation and had "the opportunity to present proofs and argument";

(5) a nonparty acts as a "proxy" to bring suit as the "designated representative" or "agent" of a party to an earlier litigation; and

(6) "a special statutory scheme may 'expressly foreclos[e] successive litigation by nonlitigants . . . if the scheme is otherwise consistent with due process," such as "bankruptcy and probate proceedings."

Taylor, 553 U.S. at 893–95, 893 n.6, 900 & n.10, 905 (alterations in original). The Federal Circuit has analyzed these six categories when considering § 315(b)'s one-year time bar to institution. *See WesternGeco*, 889 F.3d at 1319–22.

Regarding a "substantive legal relationship" according to category (2), the Federal Circuit in *WesternGeco* considered a "circumscribed" indemnity provision in a purchase agreement between a manufacturer of an allegedly infringing product and its customer. *WesternGeco*, 889 F.3d at 1321. The indemnity provision did not obligate the manufacturer to (1) defend an infringement action against the customer, (2) reimburse the customer or "pay for a lawsuit," (3) "cover any damages" for infringement awarded against the customer, or (4) "initiate an invalidity challenge." *Id.* Instead, the indemnity provision included options for the manufacturer to "modify or replace the equipment if an infringement claim was made against" the customer. *Id.*

In *WesternGeco*, the Federal Circuit noted an absence of evidence showing "an expectation that [the manufacturer] would be responsible for stepping in, or otherwise protecting [the customer] from a patent infringement suit." *WesternGeco*, 889 F.3d at 1321. The Federal Circuit decided that the purchase agreement did not amount to "a sufficiently-close relationship" between the manufacturer and the customer to warrant a finding of privity. *Id.* at 1321–22.

Additionally, the Federal Circuit has indicated that paying for trial expenses according to an indemnification agreement "normally does not establish privity or control." *Wi-Fi One*, 887 F.3d at 1340.

Regarding an "agent" according to category (5), the Supreme Court in *Taylor* explained that "principles of agency law" indicate that "preclusion is appropriate only if the putative agent's conduct of the suit is subject to the control of the party who is bound by the prior adjudication." *Taylor*, 553 U.S. at 906 (citing 1 Restatement (Second) of Agency § 14, p. 60 (1957)).

"What constitutes 'privity' varies, depending on the purpose for which privity is asserted." *Shamrock Techs., Inc. v. Med. Sterilization, Inc.*, 903 F.2d 789, 793 (Fed. Cir. 1990); *see WesternGeco*, 889 F.3d at 1317 n.5 (contrasting "privity in the context of the § 315(b) bar" from privity in the context of assignor estoppel). When considering privity in the context of assignor estoppel, the Federal Circuit noted that "an indemnification agreement, in other cases, has alone been enough to find privity." *Intel Corp. v. U.S. Int'l Trade Comm'n*, 946 F.2d 821, 839 (Fed. Cir. 1991).

When considering privity in the context of res judicata (claim preclusion), the Federal Circuit noted that "a judgment with respect to a

particular property interest may be binding on a third party based on a transfer of the property in issue to the third party after judgment." *Int'l Nutrition Co. v. Horphag Rsch., Ltd.*, 220 F.3d 1325, 1329 (Fed. Cir. 2000). A "corollary of that principle, however, is that when one party is a successor in interest to another with respect to particular property, the parties are in privity only with respect to an adjudication of rights in the property that was transferred," and "they are not in privity for other purposes, such as an adjudication of rights in other property that was never transferred between the two." *Id.* Thus, "the transfer of a particular piece of property does not have the effect of limiting rights of the transferee that are unrelated to the transferred property." *Id.*

D. Background: The Wisconsin Case

On August 12, 2022, Patent Owner filed a complaint alleging that Menard infringed the '336 patent and five other patents by importing, offering to sell, and selling numerous products. *See* Ex. 2003 ¶¶ 1, 4, 21–54, 85–166. On August 26, 2022, Menard was served with Patent Owner's complaint. Ex. 2004 (Proof of Service); *see* Suppl. Op. 4 (citing Ex. 2003); Resp. 77 (citing Ex. 2003).

On October 14, 2022, Menard filed an answer to Patent Owner's complaint. *See* Ex. 3002. In the answer, Menard denied Patent Owner's infringement allegations and asserted affirmative defenses. *See id.* at 8–14 (¶¶ 85–166), 15–16 (¶¶ 1–17). In an affirmative defense, Menard asserted that "Menard's suppliers will indemnify and defend Menard in this action" and that "[t]he suppliers will be added to this action in due course." *Id.* at 15 (¶ 11). Menard did not assert invalidity as an affirmative defense for any patent in suit. *Id.* at 15–16 (¶¶ 1–17).

On October 27, 2022, Menard filed a third-party complaint identifying Petitioner and twelve other entities as third-party defendants. *See* Ex. 2001 ¶¶ 1–22. Among other things, Menard asserted that "if held liable, Menard is entitled to indemnification" from the third-party defendants. *Id.* ¶ 3. Regarding Petitioner, Menard alleged that a "Menards Customer Returns, Defective Goods Policy and Conditions of Order Agreement" requires Petitioner "to defend, indemnify and hold Menard harmless from and against all claims of any actual or alleged violation or infringement of any intellectual property right, including patent infringement arising from Menard's use, sale or offering for sale of any goods provided by" Petitioner. *Id.* ¶¶ 24–26.

On February 27, 2023, Petitioner answered Menard's third-party complaint and, among other things, acknowledged that it and Menard are "parties to a Menards Customer Returns, Defective Goods Policy and Conditions of Order Agreement" and that Petitioner supplies accused products to Menard under that agreement. *See* Ex. 2002, 5, 8–9 (¶¶ 21, 24–25, 32–33, 35). Further, Petitioner asserted (1) affirmative defenses to Patent Owner's complaint against Menard, e.g., that each patent in suit is invalid, and (2) crossclaims "directly against" Patent Owner, i.e., seeking declaratory judgments of noninfringement and invalidity for each patent in suit. *Id.* at 94–102 (¶¶ 1–49); Ex. 2007, 7–8.[6]

[6] For Exhibit 2007 (Third-Party Defendant Luminex International Company, Ltd.'s Opposition to Signify's Motion to Dismiss Luminex's Amended Crossclaims and Amended Affirmative Defenses Against Signify), we cite to the page numbers of the brief rather than the page numbers in the header.

On August 31, 2023, the district court decided various motions, including Patent Owner's motion to sever Menard's claims against the third-party defendants. *See* Ex. 2008. In denying Patent Owner's motion to sever, the district court noted that "the court expects Menard and the third-party defendants to coordinate a litigation strategy, acting as a united front whenever possible." *Id.* at 5.

On September 26, 2023, the parties filed an Updated Joint Preliminary Pretrial Conference Report and Discovery Plan. *See* Ex. 1020. In that joint report, Menard and the third-party defendants stated that they "fully intend to, and have taken various steps to, comply with the Court's request that Menard and the third-party defendants act as a united front when possible." *Id.* at 3, 20. Among other things, Menard and the third-party defendants proposed to "collectively serve a single consolidated set of invalidity and unenforceability contentions." *Id.* at 16.

On October 19, 2023, Menard filed an amended answer to Patent Owner's complaint. *See* Ex. 2027. In the amended answer, Menard denied Patent Owner's infringement allegations and asserted affirmative defenses. *See id.* at 8–15 (¶¶ 85–166), 16–17 (¶¶ 1–10). In an affirmative defense, Menard asserted that each patent in suit is "invalid for failure to meet the 'Conditions for patentability' of 35 U.S.C. §§ 102 and 103." *Id.* at 16 (¶ 1).

On October 19, 2023, Menard also filed an amended third-party complaint. *See* Ex. 3003. The amended third-party complaint included essentially the same allegations against Petitioner as the initial third-party complaint. *Compare id.* ¶¶ 21, 23–35, *with* Ex. 2001 ¶¶ 21, 23–35.

On November 16, 2023, Petitioner answered Menard's amended third-party complaint in essentially the same way Petitioner answered Menard's initial third-party complaint. *Compare* Ex. 2013, 1–9, *with* Ex. 2002, 1–9.

On November 22, 2023, Menard and the third-party defendants served joint invalidity contentions on Patent Owner. Ex. 2011, 1, 21.[7] For the '336 patent, the joint invalidity contentions included contentions about anticipation under § 102 and obviousness under § 103 based on the references asserted in this proceeding (Chaimberg, Roberge, Halliwell, and Reiff) as well as other references. *Id.* at 26–27.

On April 29, 2024, Dr. Eden submitted an opening expert report regarding the invalidity of the '336 patent and another patent in suit. *See* Ex. 2024. Dr. Eden stated that he submitted his opening expert report "at the request of counsel for Defendant Menard, Inc. ('Menard'), and the Third-Party Defendants," including Petitioner. *Id.* ¶ 1. For the '336 patent, Dr. Eden's opening expert report includes his opinions about anticipation under § 102 and obviousness under § 103 based on the references asserted in this proceeding (Chaimberg, Roberge, Halliwell, and Reiff) as well as another reference. *Id.* ¶¶ 137–615.

On June 13, 2024, Dr. Eden submitted a rebuttal expert report regarding the noninfringement of the '336 patent and another patent in suit. *See* Ex. 2025. Dr. Eden stated that he submitted his rebuttal expert report "at the request of counsel for Defendant Menard, Inc. ('Menard'), and the Third-Party Defendants," including Petitioner. *Id.* ¶ 2.

---

[7] For Exhibit 2011 (Defendant's and the Third-Party Defendants' Joint Initial Invalidity Contentions), we cite to the page numbers that Patent Owner applied to the exhibit.

On October 1, 2024, the district court stayed the Wisconsin case pending the result of this proceeding. Ex. 3009, 2.

E. Patent Owner's Contentions

Referencing the Director's November 2024 supplemental opinion regarding Director review, Patent Owner contends that the Director:

(1) "held that a 'standard, non-exclusive, manufacturer-customer indemnification agreement,' without more, does not establish a real party in interest"; and

(2) "emphasized that her decision was limited by the record before her."

Resp. 78 (citing Suppl. Op. 3, 8, 11–12, 14–17, 19–20). Patent Owner asserts that the supplemented record (1) demonstrates "interactions between Menard and Luminex" that involve "more" and (2) establishes "an RPI and/or privy relationship in which Menard instructed Luminex to act as its representative and Luminex complied." *Id.* at 78, 81–82; *see* Sur-reply 28.

Referencing the "exclusive" manufacturer-customer relationship in *Ventex*, Patent Owner asserts that the supplemented record demonstrates a "similarly relevant" business relationship "between Luminex and Menard with respect to Signify's allegations and Menard's indemnification request." Resp. 78. Patent Owner explains that Menard-branded products accused of infringement are made by Luminex and "sold to customers exclusively by Menard such that Luminex cannot supply Menard-branded products for anyone other than Menard." *Id.* at 79, 81 (emphasis omitted). According to Patent Owner, that arrangement "removes the Menard-Luminex relationship from a standard customer-distributor relationship" toward the similarly "exclusive" manufacturer-customer relationship in *Ventex*. *Id.* at 80; *see id.* at 81.

Additionally, Patent Owner asserts that Petitioner "acted as Menard's representative well before the litigation and well outside the bounds of the indemnification clause." Resp. 81; *see* Sur-reply 28. Patent Owner explains that:

(1) Patent Owner "first reached out to Menard in connection with licensing options" in a February 2021 letter;

(2) Petitioner's counsel responded to Patent Owner's February 2021 letter in March 2021 and directed Patent Owner "not to contact Menard and instead negotiate any licensing of Menard" through Petitioner;

(3) Patent Owner subsequently "stated that it wished to conduct licensing talks with Menard";

(4) Petitioner's counsel responded in April 2021 and requested that Patent Owner allow Petitioner's counsel "to accept on behalf of Menard" a meeting to discuss Patent Owner's infringement allegations against Menard; and

(5) Petitioner's counsel also stated that Petitioner "would determine whether Menard would take a license" and that any movement on the license issue "must include" a meeting with Petitioner.

Resp. 80–81 (emphases omitted); *see* Ex. 2015, 1–2; Ex. 2016, 1; Ex. 2017, 1–2. Therefore, according to Patent Owner, Petitioner "was acting on behalf of Menard and in Menard's interests" for Menard-branded products made by Petitioner. Sur-reply 28; *see* Resp. 81.

Patent Owner also asserts that the supplemented record "shows that the Director's equitable and practical concerns were misplaced under the present facts." Resp. 79. Regarding the Director's reasoning that "as the producer of the allegedly infringing products, Petitioner has a strong and independent interest in establishing noninfringement or invalidity, so as to

remove the cloud over its products in its dealings not only with Menard but also with other customers," Patent Owner argues that "the only 'cloud' to remove is exclusively over Menard." *Id.* (citing Suppl. Op. 14); *see* Suppl. Op. 14.

Regarding the Director's reasoning that "binding an indemnitor-petitioner to the one-year bar that applies to the indemnitee-defendant on facts like these could have the perverse result of encouraging patent owners to file infringement complaints against retailers to escape the threat of potential IPR challenges by manufacturers" who may become "unwittingly" time barred, Patent Owner argues that "where private label products are infringing, the only party known to the patentee to be infringing is the brand owner." Resp. 79 (emphases omitted) (citing Suppl. Op. 14); *see* Suppl. Op. 13–14.

Patent Owner also argues that the "inequitable result regarding private label products results when the patentee sues the brand owner to stop the infringement, but then is denied § 315(b)'s protection against untimely IPRs because the brand owner—unbeknownst to the market—contracts with third-parties to supply the product." Resp. 79 (emphasis omitted). In Patent Owner's view, "[t]his result is especially inequitable where, as the Director held here, the patentee is further denied § 315(a)'s protection against IPRs filed subsequent to declaratory judgment claims for invalidity." *Id.*

Further, Patent Owner asserts that Petitioner became aware of the Wisconsin case a few weeks after "Menard was served with an infringement complaint" in August 2022 and more than one month before Menard filed a third-party complaint identifying Petitioner as a third-party defendant in October 2022. *See* Resp. 77, 80; Ex. 2001 (Third-Party Complaint);

Ex. 2003 (Complaint for Patent Infringement); Ex. 2004 (Proof of Service). Therefore, according to Patent Owner, the supplemented record:

(1) contradicts the Director's determination that there is "no evidence that Petitioner knew of the district court litigation before Menard filed its third-party complaint" against Petitioner; and

(2) addresses the Director's "primary concern" that Petitioner (the alleged indemnitor) "may not have learned of the infringement claims before Menard's IPR deadline had passed."

Resp. 80 (citing Suppl. Op. 14); Sur-reply 27–28; *see* Suppl. Op. 14.

F. Petitioner's Contentions

Petitioner contends that its relationship with Menard "is not similar to the exclusive relationship in *Ventex*." Reply 34. Petitioner explains that *Ventex* involved an Exclusive Manufacturing Agreement whereby Ventex (the petitioner) agreed to manufacture fabric only for Seirus (the alleged real party in interest) in exchange for Seirus's payment of an exclusivity fee. *Id.* at 34–35 (citing *Ventex*, IPR2017-00651, Paper 152 at 7). Petitioner also explains that in *Ventex* the Board "found 'an inextricable link' between the exclusivity fees and the IPR." *Id.* at 35 (quoting *Ventex*, IPR2017-00651, Paper 152 at 14–15).

Petitioner contends that Patent Owner mischaracterizes Petitioner's relationship with Menard as "exclusive." Reply 34. Petitioner contends that its relationship with Menard differs from the exclusive relationship in *Ventex* because Petitioner's products "are not exclusive to Menard." *Id.* at 35. Petitioner explains that it can sell its Menard-branded products to "other customers without Menard's branding." *Id.* Petitioner also explains that there is no exclusivity agreement with Menard or exclusivity fee. *Id.*

Regarding Patent Owner's assertion that "Luminex acted as Menard's representative well before the litigation and well outside the bounds of the indemnification clause," Petitioner disputes that its prelitigation interactions in 2021 with Patent Owner and Menard have any relation to this proceeding initiated in 2023. *See* Reply 34–36. Petitioner explains as follows:

> PO first emailed Menard almost three years before this IPR, asserting 19 patents against 12 products. Because Luminex manufactured some of those products, Menard relayed PO's allegations to Luminex. Naturally, as manufacturer, Luminex responded to PO seeking to understand PO's allegations and handle license-related discussions—standard responsibilities that are squarely within a manufacturer's role. Menard, as customer, had no reason to engage in discussions about products it did not manufacture. These pre-suit communications are simply routine business communications that never contemplated an IPR.

Id. at 35–36 (citation omitted).

Additionally, Petitioner contends that "Menard did not fund, direct, or control this IPR." Reply 36.

G. Analysis

1. REAL PARTY IN INTEREST

Based on the record before us and for the reasons explained below, we disagree with Patent Owner that Menard is a "real party in interest" under § 315(b). *See* Resp. 77–82; Sur-reply 27–28.

First, the circumstances here differ materially from the circumstances in *Ventex*. There, two agreements defined the relationship between Ventex (the petitioner and manufacturer of Heatwave fabric) and Seirus (the alleged real party in interest and purchaser of Heatwave fabric). *Ventex*, IPR2017-00651, Paper 152 at 7 & n.8. First, a 2013 Supplier Agreement "prevented

Ventex from selling to Seirus competitors" and included an indemnity provision requiring Ventex to indemnify Seirus for losses arising from Ventex's failure to perform certain obligations. *Id.* at 7, 14. Second, a 2016 Exclusive Manufacturing Agreement provided that Ventex would manufacture the Heatwave fabric only for Seirus in exchange for Seirus's payment of an exclusivity fee. *Id.* at 7. Columbia (the patent owner) accused Seirus products incorporating the Heatwave fabric of infringing the patent at issue, and Columbia served Seirus with a complaint alleging patent infringement in 2014 more than two years before Ventex filed a petition in 2017. *Id.* at 5, 7.

When determining that Seirus was a "real party in interest" under § 315(b), the Board reasoned that "Ventex and Seirus had a specially structured, preexisting, and well established business relationship with one another, including indemnification and exclusivity arrangements." *Ventex*, IPR2017-00651, Paper 152 at 10; *see id.* at 12.

Additionally, the Board noted that certain evidence "suggest[ed] that the Exclusive Manufacturing Agreement may have been a cover for Seirus to fund the *inter partes* reviews without leaving a paper trail establishing Ventex's awareness that, because Seirus was a real party in interest, a petition for *inter partes* review would be barred under § 315(b)." *Ventex*, IPR2017-00651, Paper 152 at 13–14. For example, shortly before petition filing, Seirus paid Ventex "a large sum of money" for exclusivity under the Exclusive Manufacturing Agreement even though the Supplier Agreement "already prevented Ventex from selling to Seirus competitors." *Id.* at 14. The Board also stated that the record showed "an inextricable link" between

the exclusivity payments under the Exclusive Manufacturing Agreement and the *inter partes* review. *Id.* at 14–15.

Petitioner distinguishes the circumstances here from the circumstances in *Ventex* by explaining that (1) it can sell its Menard-branded products to "other customers without Menard's branding" and (2) there is no exclusivity agreement with Menard or exclusivity fee. Reply 35. Based on our review, the "Menards Customer Returns, Defective Goods Policy and Conditions of Order Agreement" supports Petitioner's explanations. *See* Ex. 2047, 4–8.[8] Patent Owner does not allege that there is another agreement between Petitioner and Menard, and Patent Owner does not point to evidence showing an "exclusivity arrangement" between Petitioner and Menard. *See* Resp. 77–82; Sur-reply 27–28.

The Director described the "Menards Customer Returns, Defective Goods Policy and Conditions of Order Agreement" as a "standard, non-exclusive, manufacturer-customer indemnification agreement." *See* Suppl. Op. 5, 11, 15, 23. The Director reasoned that *Ventex* is distinguishable because the relationship between Ventex and Seirus went "far beyond a standard manufacturer-customer relationship" like the relationship between Petitioner and Menard. *Id.* at 13. That reasoning is still supported by the record before us.

---

[8] Exhibit 2047 includes the "Menards Customer Returns, Defective Goods Policy and Conditions of Order Agreement." Exhibit 2047 has been designated "Attorneys Eyes Only" and filed under seal. But the public record in this proceeding includes excerpts from that agreement, e.g., as quoted in Petitioner's pleadings in the Wisconsin case. *See, e.g.*, Ex. 2002, 7 (¶ 29); Ex. 2013, 7 (¶ 29).

Second, Petitioner's prelitigation interactions in 2021 with Patent Owner and Menard do not show that the relationship between Petitioner and Menard went "beyond a standard manufacturer-customer relationship." *See* Resp. 80–81; Reply 35–36. As Petitioner explains, Petitioner's response to Patent Owner's infringement allegations about Menard-branded products fell "squarely within a manufacturer's role," and "Menard, as customer, had no reason to engage in discussions about products it did not manufacture." Reply 35–36.

Third, the Director determined that "there is no evidence that Petitioner filed the IPR *because of* or *in response to* any request by Menard to do so." Suppl. Op. 16 (emphases in original). Based on the record before us, there is still "no evidence that Petitioner filed the IPR *because of* or *in response to* any request by Menard to do so." *See* Ex. 2015, 1–2; Ex. 2016, 1; Ex. 2017, 1–2; Ex. 2018, 1; Ex. 2046, 1–4; Ex. 2047, 1–3; Resp. 77–82; Sur-reply 27–28. As the Director explained, "the evidence at most shows that Menard requested indemnification in district court." *See* Ex. 2015, 1–2; Ex. 2016, 1; Ex. 2017, 1–2; Ex. 2018, 1; Ex. 2046, 1–4; Ex. 2047, 1–3; Suppl. Op. 16. Menard's "unilateral" indemnification requests refer to indemnification as it relates to "the district court litigation (without mention of any proceedings before the Office) and do not show that Petitioner filed this IPR as a representative or at the behest of Menard." *See* Ex. 2001 ¶¶ 3, 24–26, 28–29, 32–35; Ex. 2027, 17 (¶ 9); Ex. 3002, 15 (¶ 11); Ex. 3003 ¶¶ 3, 24–26, 28–29, 32–35; Suppl. Op. 13.

Fourth, because Petitioner can sell its Menard-branded products to "other customers without Menard's branding," we disagree with Patent Owner that "the only 'cloud' to remove is exclusively over Menard." *See*

Resp. 79; Reply 35; Ex. 2047, 4–8. Moreover, the "point is not to probe" a petitioner's interest because "it does not need any." *AIT*, 897 F.3d at 1353; *see Ventex*, IPR2017-00651, Paper 152 at 9–10.

Fifth, based on the record before us, we disagree with Patent Owner that "where private label products are infringing, the only party known to the patentee to be infringing is the brand owner." *See* Resp. 79 (emphases omitted). In a February 2021 letter to Menard, Patent Owner identified "many of Menards' LED-based lights" that allegedly used Patent Owner's "patented technologies." Ex. 2015, 1–2. In a March 2021 letter to Patent Owner, Petitioner's counsel responded to the February 2021 letter to Menard and stated that counsel was evaluating Patent Owner's infringement allegations. Ex. 2016, 1. In an April 2021 letter to Patent Owner, Petitioner's counsel stated that "Menard purchases finished products from [Petitioner] and thus [Petitioner] is much better equipped to evaluate" Patent Owner's infringement allegations. Ex. 2017, 1. Hence, contrary to Patent Owner's contention, Menard was not "the only party known to the patentee to be infringing" when Patent Owner in August 2022 filed a complaint only against Menard. *See* Ex. 2003.

Sixth, we disagree with Patent Owner that the Director's "primary concern" was that Petitioner (the alleged indemnitor) "may not have learned of the infringement claims before Menard's IPR deadline had passed." *See* Sur-reply 27–28. Regarding timing, the Director noted that:

(1) "[o]n August 26, 2022, Patent Owner served Menard with a complaint (Ex. 2003) alleging infringement by Menard of the '336 patent and five other asserted patents";

(2) "Menard filed a third-party complaint (Ex. 2001) in the civil action on October 27, 2022," and "named Petitioner and twelve other entities as its suppliers and third-party defendants"; and

(3) "[o]n February 27, 2023, Petitioner filed an answer (Ex. 2002) to Menard's third-party complaint."

Suppl. Op. 4. Thus, the Director recognized that Petitioner learned of Patent Owner's infringement claims many months before Menard's August 2023 IPR deadline.

2. PRIVY OF THE PETITIONER

Based on the record before us, we disagree with Patent Owner that Menard is a "privy of the petitioner," i.e., Luminex, under § 315(b). *See* Resp. 77–82; Sur-reply 27–28. Patent Owner makes a one-sentence argument that the supplemented record establishes "an RPI and/or privy relationship in which Menard instructed Luminex to act as its representative and Luminex complied." Resp. 81–82. Patent Owner does not address any of six categories identified by the Supreme Court in *Taylor* as exceptions to the rule against nonparty preclusion. *See* Resp. 77–82; Sur-reply 27–28; *supra* § III.C (discussing the *Taylor* categories).

As for Patent Owner's assertion that Petitioner acted as Menard's "representative," the Supreme Court in *Taylor* explained that "principles of agency law" indicate that "preclusion is appropriate only if the putative agent's conduct of the suit is subject to the control of the party who is bound by the prior adjudication." *Taylor*, 553 U.S. at 906. Based on the record before us, the evidence does not show that Petitioner's conduct of this proceeding is subject to the control of Menard. *See* Ex. 2015, 1–2;

Ex. 2016, 1; Ex. 2017, 1–2; Ex. 2018, 1; Ex. 2046, 1–4; Ex. 2047, 1–8; Resp. 77–82; Reply 36; Sur-reply 27–28.

3. CONCLUSION

For the reasons discussed above, Petitioner has demonstrated that the Petition is not time barred based on the complaint alleging infringement of the ’336 patent that was served on Menard in August 2022. *See supra* §§ III.G.2–III.G.3.

IV. PATENTABILITY ANALYSIS

A. Legal Principles: Anticipation

To “demonstrate anticipation, the proponent must show ‘that the four corners of a single, prior art document describe every element of the claimed invention.’” *Net MoneyIN, Inc. v. VeriSign, Inc.*, 545 F.3d 1359, 1369 (Fed. Cir. 2008) (quoting *Xerox Corp. v. 3Com Corp.*, 458 F.3d 1310, 1322 (Fed. Cir. 2006)). The prior-art document “must not only disclose all elements of the claim within the four corners of the document, but must also disclose those elements ‘arranged as in the claim.’” *Id.* (quoting *Connell v. Sears, Roebuck & Co.*, 722 F.2d 1542, 1548 (Fed. Cir. 1983)). Hence, a patent challenger cannot rely on portions from different, unrelated embodiments in a prior-art document to demonstrate anticipation. *See id.* at 1369, 1371.

The “disclosure of a limited number of combination possibilities” may anticipate a claim. *Nidec Motor Corp. v. Zhongshan Broad Ocean Motor Co.*, 851 F.3d 1270, 1274 (Fed. Cir. 2017). Hence, a reference may anticipate “if that reference teaches that the disclosed components or functionalities may be combined and one of skill in the art would be able to implement the combination.” *Blue Calypso, LLC v. Groupon, Inc.*, 815 F.3d

1331, 1344 (Fed. Cir. 2016). The "dispositive question regarding anticipation [is] whether one skilled in the art would reasonably understand or infer from the [reference's] teaching" that it discloses every claim element arranged as in the claim. *In re Baxter Travenol Lab'ys*, 952 F.2d 388, 390 (Fed. Cir. 1991); *see Dayco Prods., Inc. v. Total Containment, Inc.*, 329 F.3d 1358, 1368 (Fed. Cir. 2003).

We analyze the anticipation issues according to these principles.

B. Legal Principles: Obviousness

A patent may not be obtained "if the differences between the claimed invention and the prior art are such that the claimed invention as a whole would have been obvious before the effective filing date of the claimed invention to a person having ordinary skill in the art to which the claimed invention pertains." 35 U.S.C. § 103. An obviousness analysis involves underlying factual inquiries including (1) the scope and content of the prior art; (2) differences between the claimed invention and the prior art; (3) the level of ordinary skill in the art; and (4) where in evidence, objective indicia of nonobviousness, such as commercial success, long-felt but unsolved needs, and failure of others. *Graham v. John Deere Co.*, 383 U.S. 1, 17–18, 35–36 (1966); *Apple Inc. v. Samsung Elecs. Co.*, 839 F.3d 1034, 1047–48 (Fed. Cir. 2016) (en banc). When evaluating a combination of references, an obviousness analysis should address "whether there was an apparent reason to combine the known elements in the fashion claimed by the patent at issue." *KSR Int'l Co. v. Teleflex Inc.*, 550 U.S. 398, 418 (2007).

We analyze the obviousness issues according to these principles.

C. Level of Ordinary Skill in the Art

Factors pertinent to determining the level of ordinary skill in the art include (1) the educational level of the inventor; (2) the type of problems encountered in the art; (3) prior-art solutions to those problems; (4) the rapidity with which innovations are made; (5) the sophistication of the technology; and (6) the educational level of workers active in the field. *Envtl. Designs, Ltd. v. Union Oil Co.*, 713 F.2d 693, 696–97 (Fed. Cir. 1983). Not all factors may exist in every case, and one or more of these or other factors may predominate in a particular case. *Id.* These factors are not exhaustive, but merely a guide to determining the level of ordinary skill in the art. *Daiichi Sankyo Co. v. Apotex, Inc.*, 501 F.3d 1254, 1256 (Fed. Cir. 2007). Moreover, the prior art itself may reflect an appropriate skill level. *Okajima v. Bourdeau*, 261 F.3d 1350, 1355 (Fed. Cir. 2001).

Petitioner asserts that a person of ordinary skill in the art at the ’336 patent’s effective filing date would have had “a bachelor’s degree in mechanical engineering, electrical engineering, optics, or physics with at least three years of experience working in the design of LED lights or lighting fixtures; a master’s degree in one of the above disciplines with at least two years of experience; or equivalent experience.” Pet. 14 (citing Ex. 1004 ¶¶ 26–29). Dr. Eden’s testimony supports Petitioner’s assertion. *See* Ex. 1004 ¶¶ 27–28.

Patent Owner “adopts for purposes of this proceeding only” Petitioner’s description of an ordinarily skilled artisan. Resp. 10 (citing Pet. 14).

We adopt Petitioner’s description of an ordinarily skilled artisan because it comports with the technology and claims of the ’336 patent as

well as the asserted references. *See, e.g.*, Ex. 1001, 1:66–2:57, 14:31–16:27; *infra* §§ IV.F.1, IV.G.1, IV.H.1.

D. Claim Construction

We construe claim terms "using the same claim construction standard" that district courts use to construe claim terms in civil actions for patent infringement. *See* 37 C.F.R. § 42.100(b). Under that standard, claim terms "are given their ordinary and customary meaning, which is the meaning the term would have to a person of ordinary skill in the art at the time of the invention." *Power Integrations, Inc. v. Fairchild Semiconductor Int'l, Inc.*, 904 F.3d 965, 971 (Fed. Cir. 2018) (citing *Phillips v. AWH Corp.*, 415 F.3d 1303, 1312–13 (Fed. Cir. 2005) (en banc)). The meaning of claim terms may be determined by "look[ing] principally to the intrinsic evidence of record, examining the claim language itself, the written description, and the prosecution history, if in evidence." *DePuy Spine, Inc. v. Medtronic Sofamor Danek, Inc.*, 469 F.3d 1005, 1014 (Fed. Cir. 2006) (citing *Phillips*, 415 F.3d at 1312–17).

In the Petition, Petitioner states that it "proposes no terms for construction at this time" and "applies the same scope of the claim terms that [Patent Owner] applied in its complaint and its infringement contentions" in the Wisconsin case. Pet. 16.

In the Response, Patent Owner states that it "does not believe any specific constructions are necessary to render a decision." Resp. 10. According to Patent Owner, however, it identifies Petitioner's "misunderstanding of the plain and ordinary meaning of certain terms." *Id.*

"[O]nly those terms need be construed that are in controversy, and only to the extent necessary to resolve the controversy." *Vivid Techs., Inc. v.*

Am. Sci. & Eng'g, Inc., 200 F.3d 795, 803 (Fed. Cir. 1999); *see Nidec Motor Corp. v. Zhongshan Broad Ocean Motor Co.*, 868 F.3d 1013, 1017 (Fed. Cir. 2017). We determine that no claim term requires an explicit construction to decide whether Petitioner has shown by a preponderance of the evidence that claims 1–20 are unpatentable.

E. Whether Chaimberg and Halliwell Qualify as Prior Art for Claims 13, 15, and 16

Petitioner contends that claims 1–20 are entitled to an effective filing date "no earlier than" June 21, 2018, i.e., the '336 patent's filing date. *See* Pet. 16, 18–23, 60; Reply 15–20. Patent Owner contends that three claims (claims 13, 15, and 16) are entitled to an effective filing date of February 19, 2016, i.e., the '424 provisional's filing date. *See* Resp. 10–26, 30–31, 44; Sur-reply 2–8. More particularly, Petitioner disputes that the '424 provisional supports claims 13 and 16. *See* Pet. 18–23; Reply 15–20.

If a claim is entitled to an effective filing date of February 19, 2016, i.e., the '424 provisional's filing date, then Chaimberg (with a filing date of April 27, 2018) and Halliwell (with a filing date of September 23, 2016) do not qualify as prior art for that claim. *See* Ex. 1003, code (22); Ex. 1012, code (22); 35 U.S.C. § 102(a)(2).

1. GENERAL PRINCIPLES

A provisional application for patent is a U.S. national application that may or may not include a claim. *See* 35 U.S.C. § 111(b). Depending on the disclosures in a provisional application, it may establish an early effective filing date for a later nonprovisional application. *See* 35 U.S.C. § 119(e)(1).

If a patent owner attempts to antedate a reference in an *inter partes* review, the patent owner bears the burden of producing evidence

supporting an effective filing date before the reference's effective date, e.g., filing date or publication date. *See, e.g.*, *In re Magnum Oil Tools Int'l, Ltd.*, 829 F.3d 1364, 1376 (Fed. Cir. 2016); *Dynamic Drinkware*, 800 F.3d at 1379–80.

The analysis for the benefit of priority proceeds on a claim-by-claim basis. *See Lucent Techs., Inc. v. Gateway, Inc.*, 543 F.3d 710, 718 (Fed. Cir. 2008); *Waldemar Link, GmbH v. Osteonics Corp.*, 32 F.3d 556, 558 (Fed. Cir. 1994).

If a patent owner relies on an earlier application to antedate a reference, the patent owner must "show not only the existence of the earlier application, but why the written description in the earlier application supports the claim," i.e., "all the limitations" in the claim. *Tech. Licensing Corp. v. Videotek, Inc.*, 545 F.3d 1316, 1327 (Fed. Cir. 2008). The "test for sufficiency is whether the disclosure of the application relied upon reasonably conveys to those skilled in the art that the inventor had possession of the claimed subject matter as of the filing date." *Ariad Pharm., Inc. v. Eli Lilly & Co.*, 598 F.3d 1336, 1351 (Fed. Cir. 2010) (en banc); *Mentor Graphics Corp. v. EVE-USA, Inc.*, 851 F.3d 1275, 1296 (Fed. Cir. 2017). The "test requires an objective inquiry into the four corners of the specification from the perspective of a person of ordinary skill in the art." *Ariad*, 598 F.3d at 1351.

Showing why the written description in the earlier application supports a claim "does not demand any particular form of disclosure" or "that the specification recite the claimed invention *in haec verba*." *Ariad*, 598 F.3d at 1352. But "a description that merely renders the invention obvious does not satisfy the requirement." *Id.* The analysis for disclosure

sufficiency may consider "such descriptive means as words, structures, figures, diagrams, formulas, etc." *Lockwood v. Am. Airlines, Inc.*, 107 F.3d 1565, 1572 (Fed. Cir. 1997).

2. WHETHER THE '424 PROVISIONAL SUPPORTS CLAIM 13

Claim 13 reads as follows (with bracketed numbers and letters added for reference purposes):[9]

> 13. A switch for controlling a correlated color temperature (CCT) of light emitted by a luminaire, the switch comprising:
>
> [13a] a body;
>
> [13b] at least one first coupling feature disposed on the body, wherein the at least one first coupling feature is configured to electrically couple to an electrical cable of the luminaire; and
>
> [13c] an actuator disposed on the body, wherein the actuator has a range of positions,
>
> [13d] wherein each position of the range of positions of the actuator corresponds to a CCT of the light emitted by the luminaire.

Ex. 1001, 15:21–16:5.

(a) <u>Patent Owner's Contentions</u>

Patent Owner contends that the '424 provisional supports claim 13's preamble and limitations 13a–13d. *See* Resp. 11–24; Sur-reply 2–7. Patent Owner identifies disclosures in the '424 provisional that support claim 13's preamble and limitations 13a–13d. *See* Resp. 11–24.

For the portion of limitation 13b requiring "at least one first coupling feature disposed on the [switch] body," Patent Owner asserts that the

[9] We use the same reference numbers and letters that Petitioner uses to identify the claim language. *See* Pet. 40–45.

’424 provisional discloses dual inline pin or “DIP” switches 210 that “provide an input for configuring the luminaire 100 to operate at a selected correlated color temperature.” Resp. 11 (quoting Ex. 1008, 19:12–13, 19:15–16).[10] As support, Patent Owner provides the following annotated versions of the ’424 provisional’s Figure 1E in and the ’336 patent’s Figure 1E:

’424 Provisional	’336 Patent
Figure 1E (red annotation identifying DIP switch): 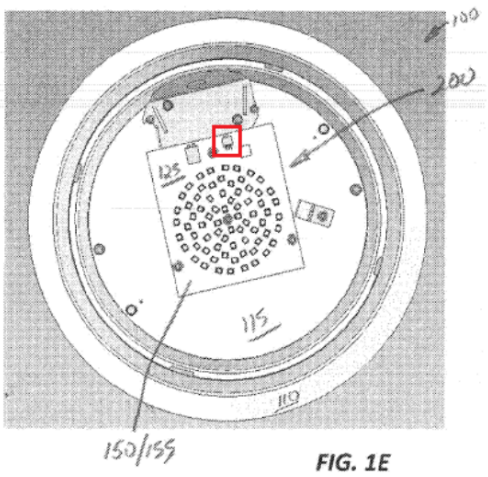 	Figure 1E (red annotation identifying DIP switch 131): 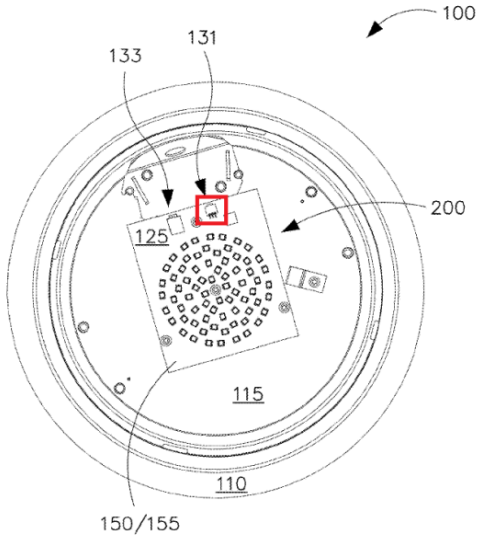

Above on the left, the ’424 provisional’s Figure 1E illustrates luminaire 100 with the luminaire’s lens and an associated reflector removed to show circuit 200 and various components mounted on substrate 125 (e.g., a circuit board), including an unlabeled dual inline pin switch, an unlabeled receptacle, and LEDs 150 and 155. Ex. 1008, 18:8–10, 19:1–2, 19:15–16, 24:1–2 (claim 10), 35 (Fig. 1E). Above on the right, the ’336 patent’s

[10] For Exhibit 1008 (the prosecution history for the ’424 provisional), we cite to the page numbers that Petitioner applied to the exhibit.

Figure 1E illustrates luminaire 100 with the luminaire's lens and an associated reflector removed to show circuit 200 and various components mounted on substrate 125 (e.g., a circuit board), including dual inline pin switch 131 that comprises individual switches 210 (not shown in Figure 1E), receptacle 133 that mates with a plug at the end of an electrical cable (not shown in Figure 1E), and LEDs 150 and 155. Ex. 1001, 5:33–36, 6:13–16, 6:6–10, 7:1–3, Fig. 1E. In each figure above, a red box surrounds the dual inline pin switch. *See* Resp. 12; Ex. 2031 ¶ 77.

Patent Owner also contends that Figure 4 in the '424 provisional shows switches 210 identified by part number 1571999-4 corresponding to a DIP switch manufactured by Tyco Electronics with a "square body." Resp. 13, 15. As support, Patent Owner provides the following image of a DIP switch manufactured by Tyco Electronics:

The above image shows an ADP series DIP switch with a rectangular body and multiple pins disposed on the rectangular body. *See id.* at 13; Ex. 2031 ¶¶ 78, 85.

For the portion of limitation 13b requiring a coupling feature "configured to electrically couple to an electrical cable of the luminaire," Patent Owner asserts that the '424 provisional discloses (1) a DIP switch

mounted on a substrate or circuit board and (2) an electrical cable or wiring that provides power to the substrate or circuit board through a wiring aperture in the housing. Resp. 16–18; Sur-reply 7; *see* Resp. 28–30; Sur-reply 7 n.3. As support, Patent Owner cites the following disclosures in the ’424 provisional: “In some embodiments, the switches 210 comprise dual inline pin (DIP) switches. . . . In some embodiments, the switches 210 are mounted on the substrate 125.” Resp. 16 (citing Ex. 1008, 19:15–18).

As further support, Patent Owner quotes the following disclosure in the ’424 provisional: “Electrical wiring (not illustrated) extends through a wiring aperture 103 in the housing 105.” Resp. 18 (quoting Ex. 1008, 18:24–25). Patent Owner also quotes claims 29 and 33 in the ’424 provisional that recite “a wiring port disposed on a side of the housing.” *Id.* (quoting Ex. 1008, 30:16–17 (claim 29), 31:5–6 (claim 33)).

As additional support, Patent Owner provides the following annotated version of the ’424 provisional’s Figure 1H:

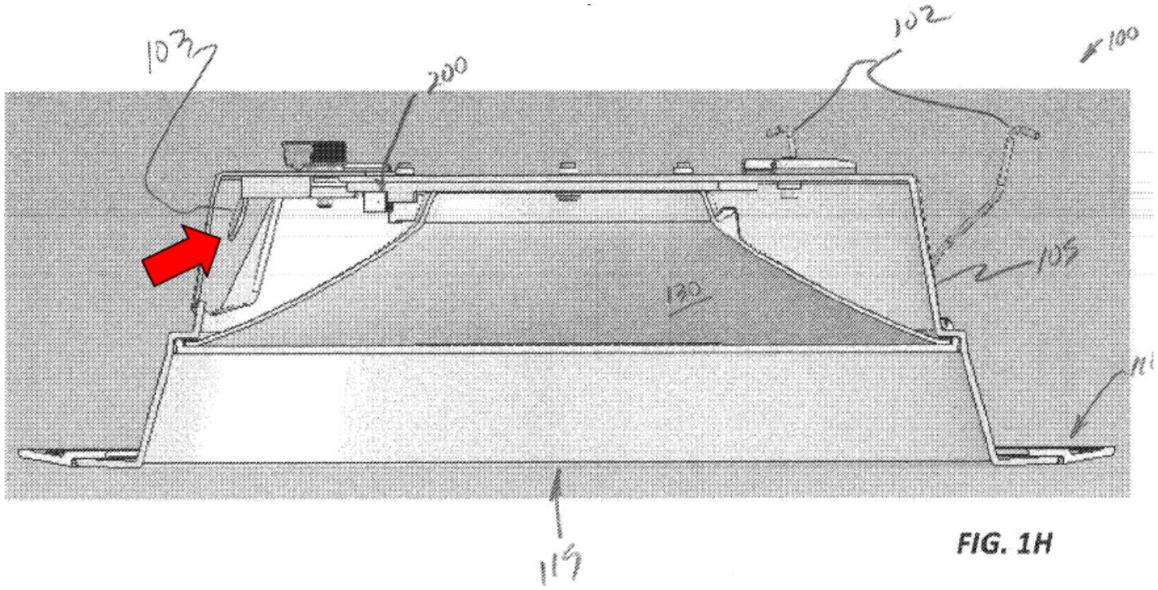

Figure 1H illustrates a cutaway view of luminaire 100 showing wiring aperture 103 in housing 105 and an end portion of circuit 200 positioned

near wiring aperture 103. Ex. 1008, 18:12, 18:19–20, 18:24–25, 19:1–2, 38 (Fig. 1H). The above annotated version of Figure 1H includes a red arrow identifying wiring aperture 103. *See* Resp. 18; Ex. 2031 ¶ 88.

Regarding the "[e]lectrical wiring (not illustrated)" disclosed in the '424 provisional, Patent Owner asserts that Dr. Eden and Dr. Krames agree that the disclosed wiring would not be "existing wiring in the house." *See* Sur-reply 3–4, 7. As support, Patent Owner quotes Dr. Eden's deposition testimony as follows:

> Q. Is it your opinion that the electrical wiring referenced in the '424 provisional could be house wiring?
>
> A. No, I don't think there is any reason to believe that.

Id. at 3 (quoting Ex. 2052, 140:23–141:2); *see id.* at 7 (citing Ex. 2052, 140:23–141:23). Patent Owner also cites Dr. Krames's declaration testimony. *Id.* at 3–4 (citing Ex. 2031 ¶¶ 87–93).

Patent Owner explains that the "[e]lectrical wiring (not illustrated)" disclosed in the '424 provisional would serve no purpose if a battery supplied power to the luminaire. Sur-reply 4–5 (citing Ex. 2052, 141:24–144:2, 147:17–148:4).

Additionally, Patent Owner contends that the '424 provisional discloses the same receptacle that mates with a plug at the end of an electrical cable as disclosed in the '336 patent. Resp. 18–19; *see* Sur-reply 8. As support, Patent Owner cites the '424 provisional's Figure 1E and the '336 patent's Figure 1E. Resp. 19. Further, Patent Owner quotes the following disclosure in the '336 patent: "The electrical cable 127 terminates in a plug 132 that mates with a receptacle 133 that is mounted

inside the housing 105 adjacent the access aperture 129 for convenient field access." *Id.* (quoting Ex. 1001, 6:11–16).

Patent Owner asserts that an ordinarily skilled artisan would have understood from the '424 provisional's disclosures that an electrical cable or wiring "passes through aperture 103 and connects to substrate 125 to power the electrical circuit on the substrate, such that the pins disposed on the body of the DIP switch are electrically coupled to the electrical cable via substrate 125 on which the DIP switch is mounted." Resp. 20 (citing Ex. 2030, 70:25–72:1; Ex. 2031 ¶¶ 92–93); *see* Sur-reply 5.

(b) Petitioner's Contentions

Petitioner contends that the '424 provisional does not support limitation 13b, i.e., "at least one first coupling feature disposed on the [switch] body, wherein the at least one first coupling feature is configured to electrically couple to an electrical cable of the luminaire." *See* Pet. 18–23; Reply 15–20. Petitioner does not dispute that the '424 provisional supports claim 13's preamble and limitations 13a, 13c, and 13d. *See, e.g.*, Pet. 18–23; Reply 15–20.

For limitation 13b, Petitioner asserts that the '424 provisional does not disclose an "electrical cable" coupled to the DIP switch. Reply 16–17, 17 n.5; *see* Pet. 19–23. Regarding the "[e]lectrical wiring (not illustrated)" disclosed in the '424 provisional, Petitioner asserts that the disclosed wiring is "not necessarily the claimed 'electrical cable of the luminaire.'" Reply 16 (emphasis omitted). According to Petitioner, the disclosed wiring may instead be "existing wiring," i.e., "house wiring," that is "outside the scope of the claims." *Id.* at 16–17 (emphasis omitted).

Petitioner also asserts that:

(1) the ’424 provisional discloses an LED driver “located in the luminaire housing”; and

(2) in implementations “using the ‘[e]lectrical wiring (not illustrated),’ this refers to ‘existing wiring in the house’ that could provide power to the LED driver, and such house wiring is not a cable of the luminaire.”

Reply 17 (emphasis omitted) (alteration by Petitioner) (citing Ex. 1027 ¶¶ 57–60; Ex. 1031, 96:8–20).

Petitioner contends that the luminaire disclosed in the ’424 provisional “does not even need an electrical cable (‘of the luminaire’ or otherwise) electrically coupled to a switch” because a battery could supply power for the luminaire “such that switches 210 would not be electrically coupled to any electrical cable.” Reply 17 (emphasis omitted) (citing Ex. 1031, 100:8–10). Petitioner contends that the ’424 provisional “never references AC power (e.g., wall outlet).” *Id.* (emphasis omitted). According to Petitioner, the ’424 provisional describes in text and depicts in Figures 2 and 4 the luminaire receiving power from “a DC power supply 205,” i.e., “a battery.” *Id.* at 17–18 (citing Ex. 1008, 19:8–10, 39 (Fig. 2 depicting DC power supply 205), 40 (Fig. 4 depicting DC power supply 205)).

Additionally, Petitioner contends that Patent Owner wrongly “uses obviousness” to show that the “[e]lectrical wiring (not illustrated)” is “electrically coupled to switches 210.” Reply 19 (citing *Lockwood*, 107 F.3d at 1571–72). Petitioner also contends that Patent Owner makes improper hindsight arguments based on the ’336 patent’s disclosure about a receptacle that mates with a plug at the end of an electrical cable. *Id.*

at 19–20 (citing Resp. 18–19). According to Petitioner, the ’424 provisional “does not disclose any receptacle,” and an ordinarily skilled artisan “would not have understood the grainy, unlabeled shape identified by” Patent Owner in the ’424 provisional’s Figure 1E as a receptacle. *Id.* at 20 (emphasis omitted).

(c) Analysis

For the reasons stated by Patent Owner and supported by Dr. Krames’s testimony, we agree with Patent Owner that the ’424 provisional supports claim 13’s preamble and limitations 13a–13d. *See* Resp. 11–24; Sur-reply 2–7; Ex. 2031 ¶¶ 75–99. For the reasons explained below, we consider Petitioner’s arguments about limitation 13b unavailing.

First, regarding the “[e]lectrical wiring (not illustrated)” disclosed in the ’424 provisional, the provisional explains that “[e]lectrical wiring (not illustrated) extends through a wiring aperture 103 in the housing 105.” Ex. 1008, 18:24–25; *see* Ex. 2031 ¶ 89. The provisional’s Figures 1E and 1H show (1) wiring aperture 103 in housing 105, (2) circuit 200 located within housing 105, and (3) an end portion of circuit 200 positioned near wiring aperture 103. Ex. 1008, 35 (Fig. 1E), 38 (Fig. 1H); *see* Ex. 2031 ¶ 88. The provisional also explains that “circuit 200 supplies electricity to the light emitting diodes.” Ex. 1008, 19:2–3; *see* Ex. 2031 ¶ 89. Based on these disclosures, an ordinarily skilled artisan would have recognized that “an electrical cable (or ‘wiring’) passes through aperture 103” to “power the electrical circuit.” Ex. 2031 ¶ 92; *see id.* ¶¶ 84–91, 93. Petitioner offers no reason why the “[e]lectrical wiring (not illustrated)” would extend into housing 105 and yet not “power the electrical circuit.” *See, e.g.*, Reply 16–17.

Second, regarding Petitioner's assertion that the "[e]lectrical wiring (not illustrated)" may be "existing wiring in the house," Dr. Eden (Petitioner's own expert) disagrees. Ex. 2052, 140:23–141:2; *see* Ex. 2031 ¶¶ 87–93; Reply 16–17. Specifically, when asked, "Is it your opinion that the electrical wiring referenced in the '424 provisional could be house wiring," Dr. Eden answered, "No, I don't think there is any reason to believe that." Ex. 2052, 140:23–141:2.

Third, regarding Petitioner's assertion that a battery could supply power for the luminaire "such that switches 210 would not be electrically coupled to any electrical cable," the '424 provisional does not expressly disclose a battery. *See* Ex. 1008, 15–40; Reply 17. Further, Petitioner fails to explain what purpose the "[e]lectrical wiring (not illustrated)" would serve by extending into housing 105 if a battery supplied power for the luminaire. *See, e.g.*, Reply 17–18.

Fourth, regarding the '424 provisional's disclosure that DC power supply 205 produces electrical energy for circuit 200, an ordinarily skilled artisan would have understood that luminaires commonly receive conventional AC power and then a driver produces DC power for the light source, e.g., LEDs. *See* Ex. 1008, 19:8–10, 39 (Fig. 2 depicting DC power supply 205), 40 (Fig. 4 depicting DC power supply 205); Ex. 1013, 4:11–19, Fig. 2; Ex. 1031, 99:17–100:2. Consistent with this, the '424 provisional explains that "circuit 200 comprises a light emitting diode driver," claim 10 recites "a light emitting diode driver circuit," and claim 16 recites "a light emitting diode driver that is controlled by the digital logic." Ex. 1008, 19:10–11, 24:3 (claim 10), 26:3 (claim 16). Hence, Petitioner erroneously equates DC power supply 205 to a battery. *See* Reply 17–18.

3. Whether the '424 Provisional Supports Claim 15

Claim 15 depends directly from claim 13 and specifies that "each position is discrete within the range of positions." Ex. 1001, 16:9–10.

(a) Patent Owner's Contentions

Patent Owner contends that the '424 provisional supports claim 15's limitation because the provisional "details how switches 210 are actuated to achieve four different CCT outputs." Resp. 24–25 (citing Ex. 1008, 16:7–16, 19:29–20:21, 23:1–9 (claim 4)). As support, Patent Owner provides the following annotated version of the provisional's Figure 3:

300

Switch 1	Switch 2	LED 1 3,000 K	LED 2 4,000K	Resulting Color Temp
On	Off	On	On	3,500 K
Off	On	On	On	3,500 K
On	On	On	Off	3,000 K
Off	Off	Off	On	4,000 K

FIG. 3

Figure 3 illustrates state table 300 for circuit 200 showing how switches 210 produce a correlated color temperature of either 3,000 K, 3,500 K, or 4,000 K as follows:

(1) when "both of the switches 210 are in the on state, the controller 215 causes the light emitting diode 155 to be off and the light emitting diode 150 to be on," thus producing "a correlated color temperature of 3,000 degrees Kelvin";

(2) when "one of the switches 210 is in the off state and the other of the switches 210 is [in] the on state, the controller 215 causes the light emitting diode 155 to be on and the light emitting diode 150 to be on," thus producing "a correlated color temperature of 3,500 degrees Kelvin"; and

(3) when "both of the switches 210 are in the off state, controller 215 causes the light emitting diode 155 to be on and the light emitting diode 150 to be off," thus producing "a correlated color temperature of 4,000 degrees Kelvin."

Ex. 1008, 17:29–30, 19:29–20:15, 39 (Fig. 3). The above annotated version of Figure 3 includes a red box around the columns labeled "Switch 1" and "Switch 2" that show each switch as either "On" or "Off." *See* Resp. 25; Ex. 2031 ¶ 100.

(b) Petitioner's Contentions

Petitioner does not dispute that the '424 provisional supports claim 15's limitation. *See, e.g.*, Pet. 18–23; Reply 15–20.

(c) Analysis

For the reasons stated by Patent Owner and supported by Dr. Krames's testimony, we agree with Patent Owner that the '424 provisional supports claim 15's limitation but disagree that the provisional discloses "four different CCT outputs." *See* Resp. 24–25; Ex. 2031 ¶ 100. Instead, the provisional discloses three different CCT outputs, i.e., 3,000 K, 3,500 K, and 4,000 K. Ex. 1008, 19:29–20:20, 23:1–9 (claim 4), 39 (Fig. 3). The provisional explains that "the controller maps the four [switch] configurations of the two switches 210 to three states for configuring" LEDs 150 and 155 because mapping "two switch configurations to a single mode of long-term operation can simplify configuration instructions and reduce errors during field configuration." *Id.* at 20:16–20; *see id.* at 23:1–9 (claim 4).

4. WHETHER THE '424 PROVISIONAL SUPPORTS CLAIM 16

Claim 16 depends directly from claim 15 and specifies that "the range of positions comprises a first position, a second position, a third position, a fourth position, and a fifth position." Ex. 1001, 16:11–13.

(a) Patent Owner's Contentions

Patent Owner contends that the '424 provisional supports claim 16's limitation because the provisional explains that a luminaire "may have fewer or more switches 210," i.e., "more than two to achieve the four positions in the preferred embodiment." Sur-reply 7 (emphasis omitted) (quoting Ex. 1008, 19:14–15). According to Patent Owner, that explanation in the '424 provisional "tracks Dr. Eden's testimony that Chaimberg's lesser disclosure of a switch having three positions demonstrated 'possession of a switch having five positions corresponding to five CCT settings.'" *Id.* at 7–8 (citing Ex. 2052, 104:21–105:8).

Additionally, Patent Owner asserts that an ordinarily skilled artisan would have understood from the '424 provisional that "the exemplary DIP switch could include a range of positions that comprises five positions, and such configuration was within the possession of the applicants." Resp. 25 (citing Ex. 2031 ¶¶ 101–102). Patent Owner also asserts that the DIP switch corresponding to part number 1571999-4 disclosed in the '424 provisional is part of the ADP series of DIP switches having "configurations with various numbers of positions." *Id.* (citing Ex. 2029, 15; Ex. 2033, 2). As support, Patent Owner provides the following annotated image from a 2008 Tyco Electronics switch catalog:

ADP Series

Product key	Positions	Mounting	Packaging	Part number
ADP0204	2	THT	tube	1571999-1
ADP02STR04		SMT	tape and reel	1571999-4
ADP0404	4	THT	tube	1571999-6
ADP04STR04		SMT	tape and reel	1571999-9
ADP0604	6	THT	tube	1-1571999-6
ADP06STR04		SMT	tape and reel	1-1571999-9
ADP0804	8	THT	tube	2-1571999-6
ADP08STR04		SMT	tape and reel	2-1571999-9
ADP1004	10	THT	tube	3-1571999-6
ADP10STR04		SMT	tape and reel	3-1571999-9

The above annotated image shows ten different switches in the ADP series of DIP switches where:

(1) two switches have two positions;

(2) two switches have four positions;

(3) two switches have six positions;

(4) two switches have eight positions; and

(5) two switches have ten positions.

See Ex. 2029, 15. The above annotated image includes a red box around the column labeled "Positions" and a red arrow identifying the switch with part number 1571999-1. *See* Resp. 25; Ex. 2031 ¶ 101.

Further, Patent Owner asserts that an ordinarily skilled artisan would have understood that the DIP switch depicted in the '424 provisional's Figures 2–4 and described in the related text is "illustrative." Resp. 26. Patent Owner also asserts that an ordinarily skilled artisan "would use a DIP switch having at least five positions" for "additional CCT outputs" when "using more than two LEDs (LEDs 150 and 155)." *Id.* (citing Ex. 2031 ¶ 102).

Additionally, Patent Owner contends that Dr. Eden and Dr. Krames agree that an ordinarily skilled artisan would have known that DIP switches, including the type disclosed in the '424 provisional, have "various configurations of positions." *See* Resp. 25–26 (citing Ex. 2029, 2–4, 15;

Ex. 2030, 73:8–16, 74:19–75:2, 76:6–8, 76:23–77:6, 80:2–12; Ex. 2031 ¶ 101).

(b) Petitioner's Contentions

Petitioner contends that the '424 provisional discloses switches 210 that have "only four positions." Reply 19 (citing Ex. 1008, 39 (Fig. 3); Ex. 1031, 105:6–9). Petitioner also contends that Patent Owner's "proposal" to replace "switches 210 with a five-position switch (selecting from five CCTs), is an obviousness modification that cannot establish written description support." *Id.* (citing *Lockwood*, 107 F.3d at 1571–72).

(c) Analysis

For the reasons explained below, we agree with Patent Owner that the '424 provisional supports claim 16's limitation. *See* Resp. 24–25; Sur-reply 7–8; Ex. 2031 ¶¶ 76, 79–80, 96, 98, 102. Specifically, the provisional discloses that switches 210 "provide an input for configuring the luminaire 100 to operate at a selected correlated color temperature" and may "comprise dual inline pin (DIP) switches." Ex. 1008, 19:12–13, 19:15–16; *see* Ex. 2031 ¶ 76. The provisional explains that "circuit 200 comprises two manual switches 210" in "the illustrated embodiment." Ex. 1008, 19:13–14, 39 (Fig. 2 depicting switches 210 as two separate switches), 40 (Fig. 4 depicting switches 210 as two separate switches); *see* Ex. 2031 ¶ 76.

The '424 provisional discloses that the "two manual switches 210" in "the illustrated embodiment" produce four configurations or switch positions as follows:

(1) switch 1 "on" and switch 2 "off";

(2) switch 1 "off" and switch 2 "on";

(3) switch 1 "on" and switch 2 "on"; and

(4) switch 1 "off" and switch 2 "off."

Ex. 1008, 20:16–18, 39 (Fig. 3); *see* Ex. 2031 ¶¶ 79–80, 96, 98. Petitioner acknowledges that switches 210 have four positions. Reply 19.

The '424 provisional also discloses that "[o]ther embodiments may have fewer or more switches 210." Ex. 1008, 19:14–15; *see* Ex. 2031 ¶ 76. If two manual switches produce four configurations or switch positions, then more than two manual switches will produce more than four configurations or switch positions, such as the five positions recited in claim 16. *See* Ex. 2031 ¶ 102.

5. Whether the '141 Application and the '062 Application Support Claims 13, 15, and 16

The '141 application (the grandparent application for the '336 patent) claims priority to the '424 provisional and incorporates by reference the "entire contents" of the '424 provisional. Ex. 1022, 25:4–7.[11] The '062 application (the parent application for the '336 patent) claims priority to the '141 application and incorporates by reference the "entire contents" of the '141 application and the '424 provisional. Ex. 1021, 12:4–8.[12]

Petitioner acknowledges that the '141 application includes "additional disclosures" relative to the '424 provisional. Pet. 19. For example, the '141 application added Figures 1I, 1J, and 1K depicting dual inline pin switch 131 positioned adjacent to receptacle 133 that mates with plug 132 at the end of electrical cable 127. Ex. 1022, 19 (Figs. 1I–1K), 31:22–32:4.

[11] For Exhibit 1022 (the prosecution history for the '141 application), we cite to the page numbers that Petitioner applied to the exhibit.
[12] For Exhibit 1021 (the prosecution history for the '062 application), we cite to the page numbers that Petitioner applied to the exhibit.

Petitioner also acknowledges that the ’141 application and the ’062 application contain the “same disclosures.” Pet. 21.

Additionally, a comparison of the respective applications indicates that the ’141 application and the ’062 application include at least comparable disclosures for claims 13, 15, and 16 as the ’424 provisional. *Compare* Ex. 1021, 12–42, *and* Ex. 1022, 12–21, 25–46, *with* Ex. 1008, 15–40; *see* Paper 44, 1.

For these reasons, the ’141 application and the ’062 application support claims 13, 15, and 16.

6. SUMMARY

For the reasons discussed above, Patent Owner demonstrates that the ancestor applications for the ’336 patent, including the ’424 provisional, support claims 13, 15, and 16. *See supra* §§ IV.E.2(c), IV.E.3(c), IV.E.4(c), IV.E.5. Hence, Patent Owner demonstrates that claims 13, 15, and 16 have an effective filing date of February 19, 2016, i.e., the ’424 provisional’s filing date. Because Chaimberg has a filing date of April 27, 2018, and Halliwell has a filing date of September 23, 2016, Chaimberg and Halliwell do not qualify as prior art for claims 13, 15, and 16. *See* Ex. 1003, code (22); Ex. 1012, code (22); Pet. 16, 60; 35 U.S.C. § 102(a)(2).

F. Alleged Anticipation by or Obviousness over Chaimberg: Claims 1, 3, 6–9, 11–13, 15, and 17–19

Petitioner contends that claims 1, 3, 6–9, 11–13, 15, and 17–19 are unpatentable under § 102 as anticipated by Chaimberg or § 103 as obvious over Chaimberg. *See* Pet. 15–46; Reply 1–8, 10–11, 20–24. Patent Owner disputes Petitioner’s contentions. *See* Resp. 43–55; Sur-reply 14–18, 20–25.

Below, we provide an overview of Chaimberg. Then, we consider the patentability issues. For the reasons explained below, we agree with Petitioner that claims 1, 3, 6, 7, 9, 11, 12, 18, and 19 are unpatentable under § 103 because the claims would have been obvious over Chaimberg but disagree that claims 8, 13, 15, and 17 are unpatentable based on Chaimberg.

1. OVERVIEW OF CHAIMBERG (EXHIBIT 1003)

Chaimberg is a U.S. patent titled "Ceiling Mountable LED Light Fixture with Accessible CCT Selectable Switch," filed on April 27, 2018, and issued on March 19, 2019. Ex. 1003, codes (12), (22), (45), (54). Chaimberg states that the invention "relates to light emitting diode (LED) light fixtures and more specifically to a ceiling mountable LED light fixture" having at least the following components:

(1) "at least two sets of LED's of different correlated color temperature (CCT)"; and

(2) a selector switch (a) "mounted in a cable secured to the LED light fixture" and (b) "readily accessible when the LED light fixture is removed from its ceiling mounting hole."

Id. at 1:7–15; *see id.* at code (57).

Chaimberg explains that the "color of light is determined in terms of color temperature expressed in Kelvin degrees," e.g., about 3000 Kelvin for "warm white light" and about 5400 Kelvin for "sunlight in the summer." Ex. 1003, 1:30–35. Chaimberg also explains that a ceiling-mountable LED light fixture may include an LED driver circuit inside a driver housing and a selector switch "mounted on the driver housing to select a desired color temperature of the LED light fixture." *Id.* at 1:44–50. But Chaimberg identifies drawbacks with that arrangement, such as the following:

(1) difficulty reaching or retracting the driver housing when changing the switch setting; and

(2) the "hazard presented by the live wire connected to the driver circuit inside the driver housing, particularly if there is a fault in the wiring."

Id. at 1:50–67; *see id.* at 3:29–48.

To address those drawbacks, Chaimberg discloses a ceiling-mountable LED light fixture where "the selector switch is readily available and visible to the end user by simply removing the light fixture" from the ceiling and then drawing "the selector switch out of the fixture mounting hole." Ex. 1003, 2:16–21; *see id.* at 2:22–45, code (57).

Chaimberg's Figure 1 (reproduced below) is a perspective view of a ceiling-mountable LED light fixture:

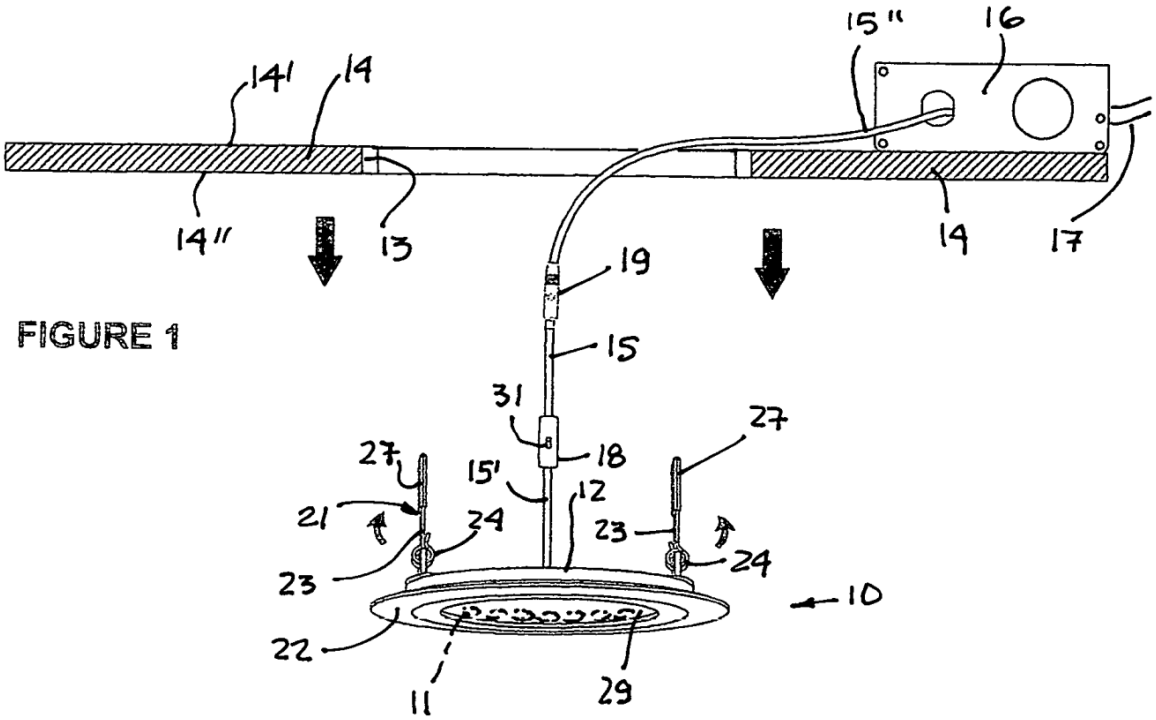

FIGURE 1

Figure 1 illustrates ceiling-mountable LED light fixture 10 with the following components:

- two sets of different color LEDs 11 (shown in phantom lines);
- housing 12 having external circumferential flange 22;
- driver housing 16 with driver circuit 20 (not shown) that receives "line voltage from live wire 17" and "drives either of the LED sets";
- electrical cable 15 extending from lower end section 15' at housing 12 to far end 15" at driver housing 16;
- selector switch 18 mounted on cable 15 and including slide button 31;
- connector 19 for "disconnecting the cable lower end section 15' and the switch from the driver housing 16 should replacement of the LED light fixture be necessary for all sorts of reasons";
- detachable retention means 21 for "removable securement" of the LED light fixture in the fixture mounting hole that comprises "two clamping arms 23 secured to the housing 12 on opposed diagonal sides of the housing"; and
- light-transmitting lens 29.

Ex. 1003, 2:51–57, 2:66–3:2, 3:18–25, 3:49–64, 4:4–8, 4:30–37, Fig. 1.

Figure 1 shows LED light fixture 10 "retracted from its fixture mounting hole 13 formed in the ceiling sheeting material 14." Ex. 1003, 3:14–16, Fig. 1. Driver housing 16 "can be secured to ceiling structural members not shown, before the installation of the sheeting material 14 or be conveniently located over the top surface 14' of the ceiling sheeting 14 through the mounting hole after the ceiling sheeting material is installed." *Id.* at 3:25–29.

The two sets of LEDs 11 "have different Kelvin temperature ratings (CCT)." Ex. 1003, 3:5–6. For instance, the first set of LEDs generates light

with a temperature of 3000 K ("warm amber light"), and the second set of LEDs generates light with a temperature of 5000 K ("white light"). *Id.* at 3:6–9; *see id.* at 4:32–34.

Cable 15 includes wires secured at end 15' to the two sets of LEDs 11 to "supply driving current to each of the sets" and secured at end 15" to driver circuit 20. Ex. 1003, 3:18–23, Figs. 1, 3. Cable 15 has "suitable length to provide access to the switch 18 without having to withdraw the driver housing 16 from the fixture mounting hole 13." *Id.* at 3:51–54.

Selector switch 18 is "a toggle switch provided with a slide button 31 having two conducting arms 32 and 33 and displaceable to three switch positions." Ex. 1003, 4:34–37, Fig. 3. In a first switch position, a first set of LEDs receives current, e.g., to generate light with a temperature of 3000 K. *Id.* at 4:37–48. In a second switch position, a second set of LEDs receives current, e.g., to generate light with a temperature of 5000 K. *Id.* at 4:49–59. In a third switch position, both sets of LEDs receive current, e.g., to generate light with a temperature of 4000 K. *Id.* at 4:60–5:10; *see id.* at 5:49–6:4.

Chaimberg's Figure 2 (reproduced below) is a partly fragmented side view of the ceiling-mountable LED light fixture in Figure 1:

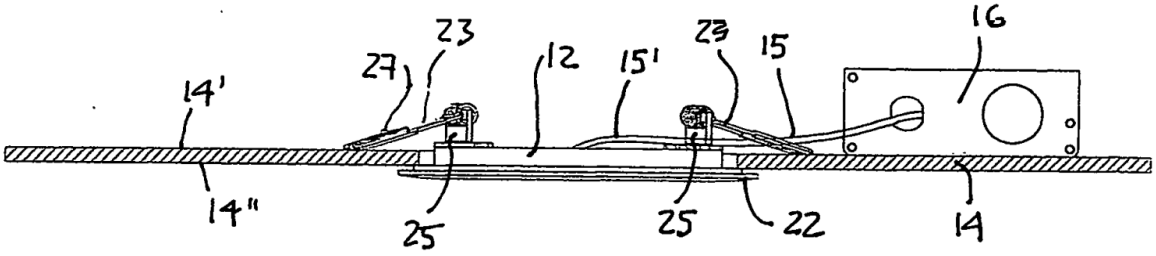

FIGURE 2

Figure 2 illustrates ceiling-mountable LED light fixture 10 "mounted in the fixture mounting hole of the ceiling sheet material." Ex. 1003, 2:58–60, Fig. 2.

Chaimberg discloses that a ceiling-mountable LED light fixture may include "at least two sets of LED's" with different correlated color temperatures. Ex. 1003, 1:7–15, 2:24–26, 2:30–33, 2:38–45, 5:16–19, code (57).

2. INDEPENDENT CLAIM 1

(a) Preamble

Claim 1 recites "[a] luminaire." Ex. 1001, 14:31 (preamble).

Petitioner contends that Chaimberg discloses claim 1's preamble because (1) Chaimberg discloses a ceiling-mountable LED light fixture and (2) "the terms 'luminaire' and 'light fixture' are generally synonymous and refer to a complete lighting unit." Pet. 23–24 (citing Ex. 1003, 2:51–57, Fig. 1; Ex. 1004 ¶ 89).

Patent Owner makes no arguments specific to claim 1's preamble. *See, e.g.*, Resp. 48–52; Sur-reply 20–23.

Generally, a preamble does not limit a claim. *Allen Eng'g Corp. v. Bartell Indus., Inc.*, 299 F.3d 1336, 1346 (Fed. Cir. 2002). We need not decide whether claim 1's preamble limits the claim because, for the reasons stated by Petitioner and supported by Dr. Eden's testimony, we agree with Petitioner that Chaimberg discloses claim 1's preamble. *See* Pet. 23–24; Ex. 1004 ¶¶ 88–90.

(b) Limitation 1a

Claim 1 recites "a housing comprising at least one outer surface that forms a first cavity." Ex. 1001, 14:32–33 (limitation 1a).

Petitioner contends that Chaimberg discloses limitation 1a because Chaimberg's LED light fixture includes housing 12 with (1) circumferential flange 22 and (2) a wall extending vertically from circumferential flange 22 toward ceiling sheeting material 14. Pet. 24–25 (citing Ex. 1003, 2:32–34, 3:3–5, 3:10–11, Fig. 1). Petitioner also contends that the wall's outer surfaces and circumferential flange 22 form "a cavity that holds LEDs 11." *Id.* at 25.

Patent Owner makes no arguments specific to limitation 1a. *See, e.g.*, Resp. 48–52; Sur-reply 20–23.

For the reasons stated by Petitioner and supported by Dr. Eden's testimony, we agree with Petitioner that Chaimberg discloses limitation 1a. *See* Pet. 24–26; Ex. 1004 ¶¶ 91–96.

(c) Limitation 1b

Claim 1 recites "at least one electrical component disposed, at least in part, within the first cavity." Ex. 1001, 14:34–35 (limitation 1b).

Petitioner contends that Chaimberg discloses limitation 1b because Chaimberg's LED light fixture includes LEDs 11 that "are electrical components mounted inside the above-described 'wall' of the housing 12." Pet. 26–27 (citing Ex. 1003, 2:66–3:12, Fig. 1). As support, Petitioner provides the following highlighted version of Chaimberg's Figure 1:

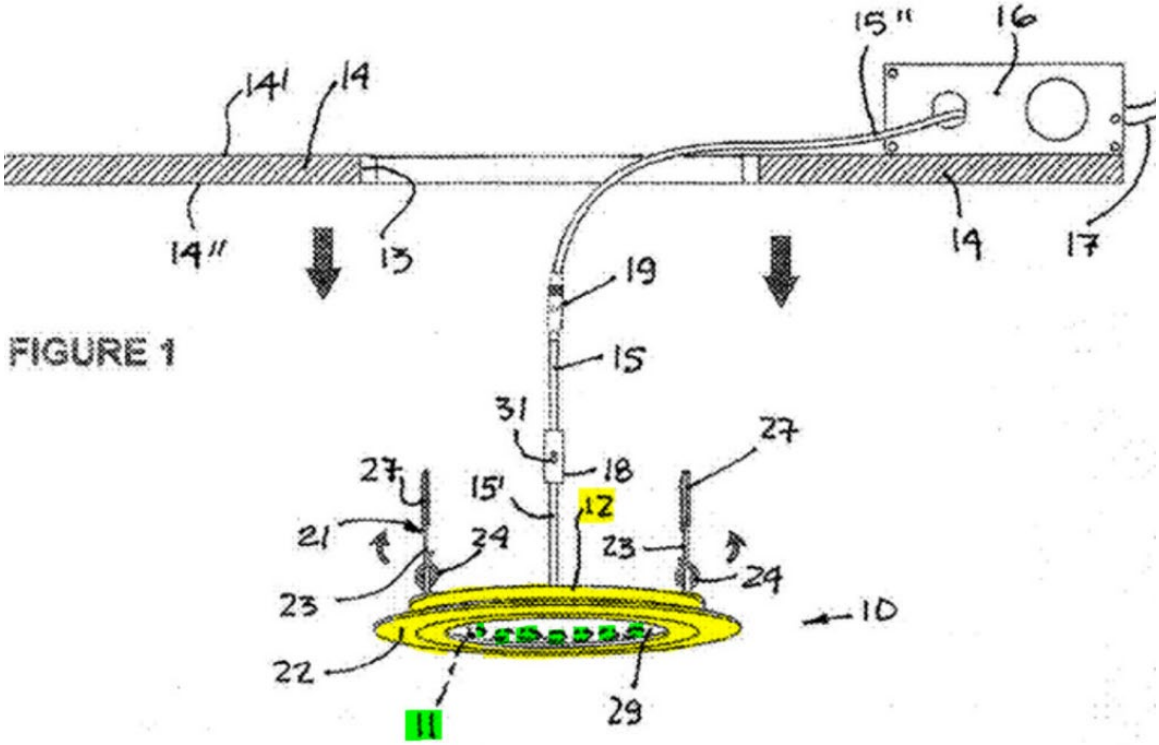

Figure 1 illustrates ceiling-mountable LED light fixture 10 "retracted from its fixture mounting hole 13 formed in the ceiling sheeting material 14." Ex. 1003, 2:51–57, 2:66–3:2, 3:14–16, Fig. 1. The above highlighted version of Figure 1 includes:

- green highlighting over reference numeral 11 denoting the light fixture's LEDs;
- green highlighting over the structure corresponding to light fixture's LEDs;
- yellow highlighting over reference numeral 12 denoting the light fixture's housing; and
- yellow highlighting over the structure corresponding to light fixture's housing.

See Pet. 27; Ex. 1004 ¶ 98.

Patent Owner makes no arguments specific to limitation 1b. *See, e.g.*, Resp. 48–52; Sur-reply 20–23.

For the reasons stated by Petitioner and supported by Dr. Eden's testimony, we agree with Petitioner that Chaimberg discloses limitation 1b. *See* Pet. 26–27; Ex. 1004 ¶¶ 97–100.

(d) Limitation 1c

Claim 1 recites "an electrical cable comprising a first end and a second end, wherein the first end is coupled to the at least one electrical component." Ex. 1001, 14:36–38 (limitation 1c).

Petitioner contends that Chaimberg discloses limitation 1c because Chaimberg's LED light fixture includes "cable 15 with wires 'secured to the two sets of LED[s] to supply driving current to each of the sets.'" Pet. 28 (alteration by Petitioner) (quoting Ex. 1003, 3:19–20). Petitioner contends that cable 15 has a "first end" coupled to LEDs 11 that correspond to the claimed "at least one electrical component." *Id.* (citing Ex. 1004 ¶ 102). Petitioner contends that cable 15 has a "second end" secured to driver circuit 20 in driver housing 16. *Id.* (citing Ex. 1003, 3:17–25).

Patent Owner makes no arguments specific to limitation 1c. *See, e.g.*, Resp. 48–52; Sur-reply 20–23.

For the reasons stated by Petitioner and supported by Dr. Eden's testimony, we agree with Petitioner that Chaimberg discloses limitation 1c. *See* Pet. 28–29; Ex. 1004 ¶¶ 101–103.

(e) Limitation 1d

Claim 1 recites "a switch coupled to the electrical cable, wherein the switch is disposed remotely from the housing." Ex. 1001, 14:39–40 (limitation 1d).

(i) Petitioner's Contentions in the Petition

Petitioner contends that Chaimberg discloses limitation 1d because Chaimberg's LED light fixture includes selector switch 18 that is:

(1) "mounted on cable 15";

(2) "physically coupled to cable 15";

(3) "electrically coupled to cable 15"; and

(4) "disposed remotely from the housing."

Pet. 29 (citing Ex. 1003, 3:49–54, 4:30–5:10, Fig. 1; Ex. 1004 ¶ 105). Petitioner asserts that "Chaimberg states that switch 18 is located 'adjacent to the LED light fixture housing.'" *Id.* (quoting Ex. 1003, 3:50–51).

Additionally, Petitioner contends that "manipulation of switch 18 controls the drive current supplied to one or more of the sets of LEDs." Pet. 29 (citing Ex. 1003, 4:30–5:10).

(ii) Patent Owner's Contentions in the Response

Patent Owner contends that Chaimberg's Figures 1 and 2 show that "box 18 is not designed to be 'disposed remotely from the housing.'" Resp. 49 (emphasis omitted). Patent Owner also contends that "box 18" is (1) "disposed within the housing" and (2) "not visible at all in Figure 2," thus "showing that the switch is not 'disposed remotely from' the housing." *Id.* (emphasis omitted) (citing Ex. 1003, Figs. 1–2; Ex. 2031 ¶¶ 166–170); *see id.* at 50. As support, Patent Owner provides the following annotated version of Figure 2:

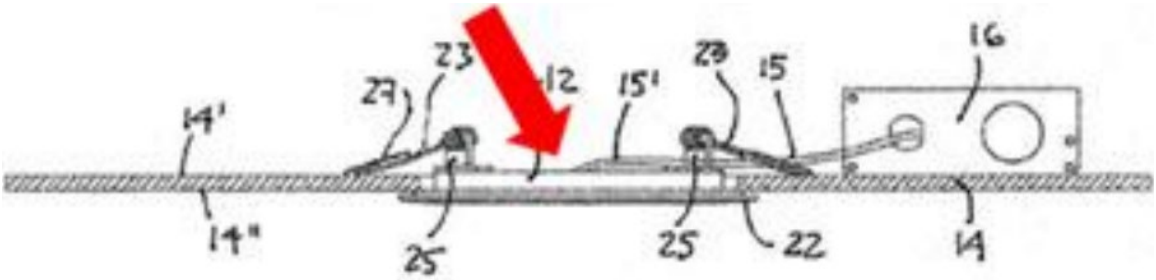

FIGURE 2

Figure 2 illustrates ceiling-mountable LED light fixture 10 "mounted in the fixture mounting hole of the ceiling sheet material." Ex. 1003, 2:58–60, Fig. 2. The above annotated version of Figure 2 includes a red arrow identifying housing 12 for light fixture 10. *See* Resp. 49; Ex. 2031 ¶ 167. According to Patent Owner, "[b]ox 18 is not visible at all in Figure 2" because "it is located within the device housing." Resp. 50 (emphasis omitted).

Additionally, Patent Owner contends that Chaimberg's disclosures about cable 15 confirm the location of switch 18 because:

(1) Chaimberg describes cable 15 as including lower end section 15' that can be disconnected from far end 15" via connector 19; and

(2) Figure 1 shows switch 18 "located well below connector 19 (i.e., the disconnection point)."

Resp. 49–50. As support, Patent Owner provides the following highlighted and annotated version of Figure 1:

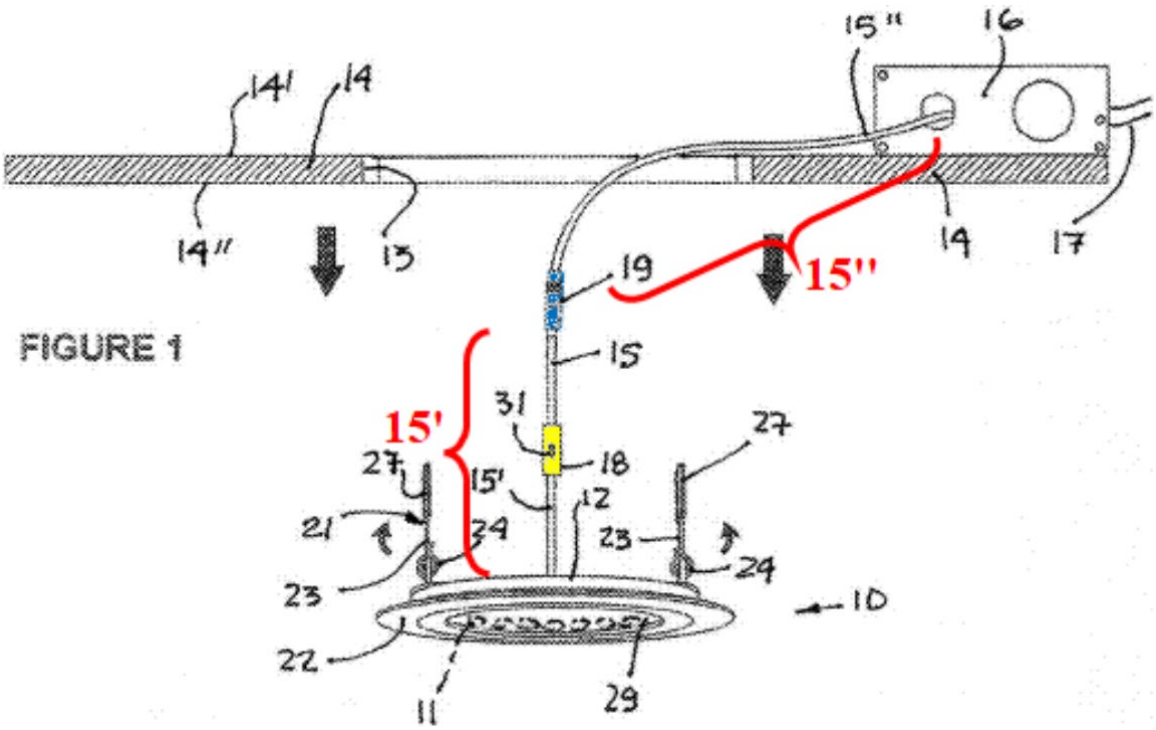

Figure 1 illustrates ceiling-mountable LED light fixture 10 "retracted from its fixture mounting hole 13 formed in the ceiling sheeting material 14." Ex. 1003, 2:51–57, 2:66–3:2, 3:14–16, Fig. 1. The above highlighted and annotated version of Figure 1 includes:

- yellow highlighting over switch 18;
- blue highlighting over connector 19;
- the red annotation 15' identifying the section of cable 15 between housing 12 and connector 19; and
- the red annotation 15" identifying the section of cable 15 between connector 19 and driver housing 16.

See Resp. 50; Ex. 2031 ¶ 168.

Further, Patent Owner asserts that Chaimberg "raises numerous concerns relating to disposing a switch in a remote position" and "teaches that the switch should not be disposed remotely from the housing." Resp. 51 (emphasis omitted) (citing Ex. 1003, 1:48–2:12, 3:29–48; Ex. 2031 ¶ 170);

see Sur-reply 24. According to Patent Owner, "Chaimberg's disparagement of remotely located switches makes clear that Chaimberg does not contemplate a switch disposed remotely from a luminaire housing as required by claim 1, and in fact dissuades from the same." Resp. 51; *see id.* at 52–53.

(iii) Petitioner's Contentions in the Reply

Petitioner contends that "Chaimberg is clear" and discloses that "selector switch 18" is "mounted on the cable 15" remotely from housing 12. Reply 2 (quoting Ex. 1003, 3:50). According to Petitioner, "Chaimberg's switch 18 is indisputably external from housing 12 and therefore must be remote." *Id.* at 3 (emphasis omitted).

Petitioner contends that "Chaimberg's Figure 2 confirms that switch 18 is remote because switch 18 is hidden from view behind support 23, outside the luminaire housing." Reply 2 (emphasis omitted) (citing Ex. 1027 ¶¶ 8–11). As support, Petitioner provides the following highlighted and annotated version of Figure 2 based on Patent Owner's annotated version of Figure 2:

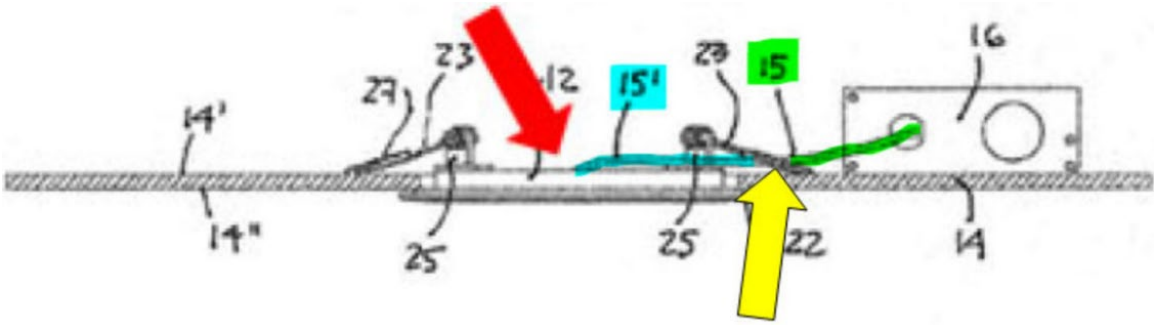

FIGURE 2

Figure 2 illustrates ceiling-mountable LED light fixture 10 "mounted in the fixture mounting hole of the ceiling sheet material." Ex. 1003, 2:58–60, Fig. 2. The above highlighted and annotated version of Figure 2 includes:

- a red arrow identifying housing 12 for light fixture 10;
- blue highlighting over reference numeral 15';
- blue highlighting over the section of cable 15 that extends from housing 12 toward driver housing 16 and ends at clamping arm 23;
- green highlighting over reference numeral 15;
- green highlighting over the section of cable 15 that extends from driver housing 16 toward housing 12 and ends at clamping arm 23; and
- a yellow arrow identifying the point where cable 15 passes behind or through clamping arm 23.

See Reply 3; Ex. 1027 ¶ 10.

Additionally, Petitioner disputes that Chaimberg disparages remotely located switches. Reply 3; *see id.* at 4–5. Petitioner contends that Chaimberg's discussion of remotely located switches concerns "the conventional technique of mounting a CCT switch on a driver housing." *Id.* at 3–4 (emphasis omitted) (citing Ex. 1003, 1:48–2:12, 3:29–48). According to Petitioner, Chaimberg's discussion of remotely located switches confirms that "remote switches were well-known." *Id.* at 4.

(iv) <u>Patent Owner's Contentions in the Sur-reply</u>

Patent Owner contends that Petitioner's highlighted and annotated version of Figure 2 is "fabricated and wrong" because it erroneously depicts the blue-highlighted section and the green-highlighted section as separate portions of cable 15, whereas reference numeral 15 identifies "the entire cable" and reference numeral 15' identifies "the end of that cable nearest to

the luminaire housing." Sur-reply 21 (citing Ex. 1003, 3:18–23; Ex. 2052, 70:24–72:2).

Patent Owner contends that "Figure 2 also shows an outline of cable 15 passing behind arms 23 and flange 25, with no indication of any switch present." Sur-reply 21. As support, Patent Owner provides the following highlighted and annotated excerpt from Figure 2:

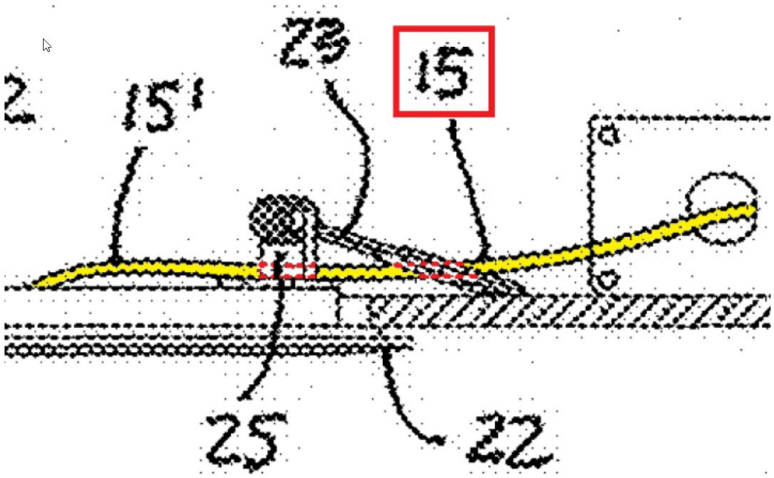

The above highlighted and annotated excerpt from Figure 2 includes:

- yellow highlighting over cable 15;
- a red box around reference numeral 15;
- a red box around the portion of cable 15 that passes beneath coil spring 24 (not labeled) on vertical flange 25; and
- a red box around the portion of cable 15 that passes behind or through clamping arm 23.

See Sur-reply 22.

Patent Owner asserts that if "switch 18 were actually behind arm 23, its outline would be visible in Figure 2, because the casing of switch 18 is shown in Figure 1 to be larger than the diameter of cable 15." Sur-reply 22. According to Patent Owner, the only locations for switch 18 in Figure 2 are

"within the luminaire housing or in the driver housing," and "Chaimberg specifically teaches not to locate switch inside driver housing, leaving only the luminaire housing." *Id.* at 22–23 (citing Ex. 1031, 53:23–54:17; Ex. 2031 ¶¶ 168–170).

(v) Analysis

We agree with Petitioner that Chaimberg teaches limitation 1d. *See* Pet. 29; Reply 1–4; Ex. 1004 ¶¶ 71, 104–108; Ex. 1027 ¶¶ 8–9. Specifically, Chaimberg explains that "the selector switch 18 is mounted on the cable 15 adjacent to the LED light fixture housing 12 and the cable is of suitable length to provide access to the switch 18 without having to withdraw the driver housing 16 from the fixture mounting hole 13." Ex. 1003, 3:49–54; *see* Ex. 1004 ¶ 105. An ordinarily skilled artisan would have understood that switch 18 is "coupled to the electrical cable" according to limitation 1d, i.e., coupled to cable 15. *See* Ex. 1004 ¶ 105.

Further, Chaimberg's Figure 1 shows switch 18 "disposed remotely" from housing 12 according to limitation 1d when LED light fixture 10 is "retracted from its fixture mounting hole 13 formed in the ceiling sheeting material 14." Ex. 1003, 2:51–57, 2:66–3:2, 3:14–16, Fig. 1; *see* Ex. 1004 ¶¶ 71, 140, 146; Ex. 1027 ¶¶ 8–9. Prior art that "sometimes meet the claim elements" suffices "to show obviousness." *Unwired Planet, LLC v. Google Inc.*, 841 F.3d 995, 1002 (Fed. Cir. 2016). For example, "a prior art product that sometimes, but not always, embodies a claimed method nonetheless teaches that aspect of the invention." *Hewlett-Packard Co. v. Mustek Sys., Inc.*, 340 F.3d 1314, 1326 (Fed. Cir. 2003).

For the reasons stated, we agree with Petitioner that Chaimberg teaches limitation 1d. *See* Pet. 28–29; Ex. 1004 ¶¶ 101–103. Although

Chaimberg suffices "to show obviousness," Chaimberg does not anticipate claim 1. *See Unwired Planet*, 841 F.3d at 1002.

(f) Limitation 1e

Claim 1 recites "wherein the switch has a plurality of positions, wherein each position of the plurality of positions of the switch corresponds to a discrete correlated color temperature (CCT) output by one or more light sources of the luminaire." Ex. 1001, 14:40–45 (limitation 1e).

Petitioner contends that Chaimberg discloses limitation 1e because Chaimberg's LED light fixture includes selector switch 18 that Chaimberg describes as "a toggle switch provided with a slide button 31 having two conducting arms 32 and 33 and displaceable to three switch positions." Pet. 30 (citing Ex. 1003, 4:34–37). Petitioner also contends that the toggle switch's three positions correspond to three discrete CCT outputs. *Id.*

Further, Petitioner asserts that Chaimberg identifies the following exemplary CCT outputs: "3000K (first position), 5000K (second position), and 4000K (third position)." Pet. 30 (citing Ex. 1003, 4:37–5:10). According to Petitioner, "Chaimberg's driver circuit controls the output of light based on the setting of the switch 18." *Id.* (citing Ex. 1003, 4:30–49, Fig. 3).

Patent Owner makes no arguments specific to limitation 1e. *See, e.g.*, Resp. 48–52; Sur-reply 20–23.

For the reasons stated by Petitioner and supported by Dr. Eden's testimony, we agree with Petitioner that Chaimberg discloses limitation 1e. *See* Pet. 30; Ex. 1004 ¶¶ 109–111.

(g) Alleged Objective Indicia of Nonobviousness

(i) General Principles

Before reaching a conclusion about obviousness, we consider evidence concerning objective indicia of nonobviousness. *See Apple*, 839 F.3d at 1048. For such evidence to have substantial weight, "its proponent must establish a nexus between the evidence and the merits of the claimed invention." *ClassCo, Inc. v. Apple, Inc.*, 838 F.3d 1214, 1220 (Fed. Cir. 2016); *see Ancora Techs., Inc. v. Roku, Inc.*, 140 F.4th 1351, 1361 (Fed. Cir. 2025) (noting that the Board did not err by requiring "a nexus to the challenged claims as opposed to the patent as a whole"). "[T]here is no nexus unless the evidence presented is 'reasonably commensurate with the scope of the claims.'" *ClassCo*, 838 F.3d at 1220 (quoting *Rambus Inc. v. Rea*, 731 F.3d 1248, 1257 (Fed. Cir. 2013)).

The patentee "bears the burden of showing that a nexus exists." *WMS Gaming, Inc. v. Int'l Game Tech.*, 184 F.3d 1339, 1359 (Fed. Cir. 1999).

A rebuttable presumption of nexus arises "when the patentee shows that the asserted objective evidence is tied to a specific product and that product 'embodies the claimed features, and is coextensive with them.'" *Fox Factory, Inc. v. SRAM, LLC*, 944 F.3d 1366, 1373 (Fed. Cir. 2019) (quoting *Polaris Indus., Inc. v. Arctic Cat, Inc.*, 882 F.3d 1056, 1072 (Fed. Cir. 2018)). Whether a rebuttable presumption of nexus arises "turns on the nature of the claims and the specific facts." *Teva Pharms. Int'l GmbH v. Eli Lilly & Co.*, 8 F.4th 1349, 1362 (Fed. Cir. 2021). The presumption analysis should consider the unclaimed features in the product tied to the objective evidence to assess their significance and impact on the correspondence between the patented invention and the product. *Quanergy*

Sys., Inc. v. Velodyne Lidar USA, Inc., 24 F.4th 1406, 1418 (Fed. Cir. 2022). When, "for example, the patented invention is only a small component of the product tied to the objective evidence, there is no presumption of nexus." *Henny Penny Corp. v. Frymaster LLC*, 938 F.3d 1324, 1333 (Fed. Cir. 2019).

Absent a presumption of nexus, the patentee may prove nexus by showing that the objective evidence resulted directly from "the unique characteristics of the claimed invention." *Fox Factory*, 944 F.3d at 1373–74; *see In re Huang*, 100 F.3d 135, 140 (Fed. Cir. 1996).

Thus, the Board employs a two-step analysis in evaluating whether a patentee has established a nexus between the evidence concerning objective indicia of nonobviousness and the merits of the claimed invention. *See Lectrosonics, Inc. v. Zaxcom, Inc.*, IPR2018-01129, Paper 33 at 32–33 (PTAB Jan. 24, 2020) (precedential). Initially, the Board considers whether the patentee has demonstrated that the "products are coextensive (or nearly coextensive) with the challenged claims," resulting in a rebuttable presumption of nexus. *Id.* at 33. Absent a rebuttable presumption of nexus, the Board considers whether the patentee has demonstrated "a legally and factually sufficient connection" between the evidence and the claimed invention. *See Henny Penny*, 938 F.3d at 1332; *Lectrosonics*, IPR2018-01129, Paper 33 at 33.

(ii) <u>Patent Owner's Position</u>

Patent Owner asserts that the '336 patent addressed a need for "a single LED lighting device adaptable for multiple applications/customers" by providing "multiple, configurable CCT options" using "a switch to control the CCT of light emitted by a luminaire (e.g., claim 13)." Resp. 3.

Patent Owner asserts that the ’336 patent’s “novel device-based CCT switch was introduced in the Halo Commercial PR8 family of products with SelecCCTable™ technology initially offered by Eaton,” i.e., the assignee of the ’336 patent at issuance. *Id.* at 6. According to Patent Owner, the PR8 family of products used a dual inline pin (DIP) switch for CCT selection. *Id.*

As support, Patent Owner provides the following image from a brochure for the “Halo Commercial PR8 8" LED Fixture”:

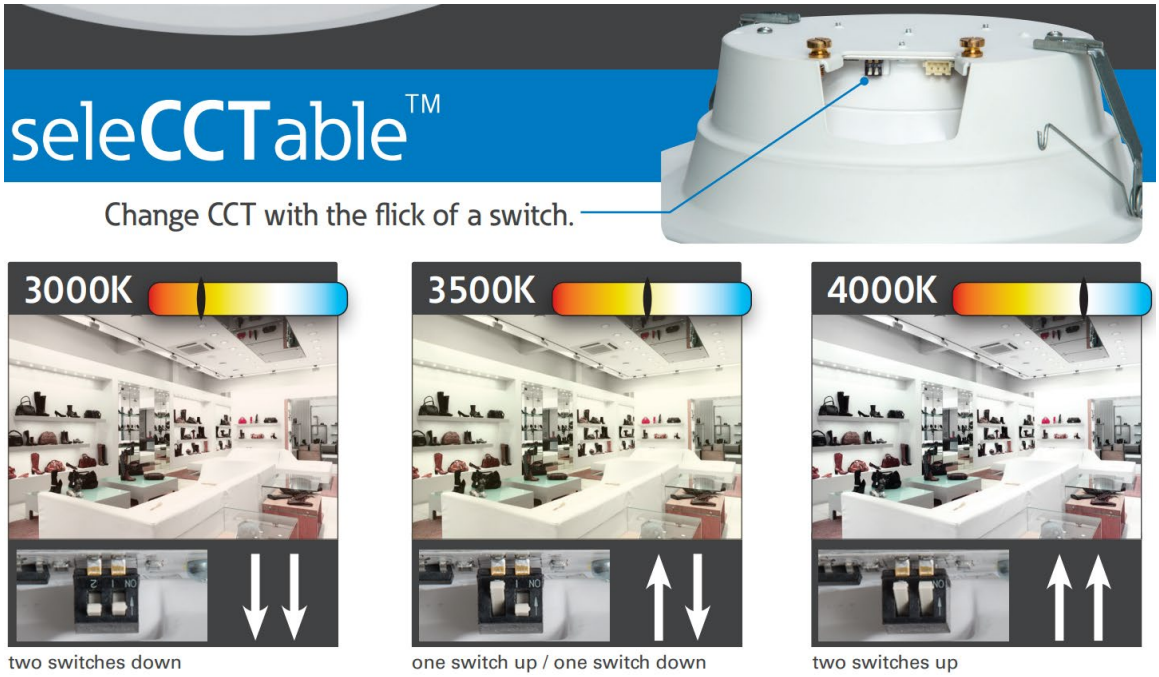

The above image shows a light fixture with a cover removed to reveal a DIP switch for CCT selection on the left and a receptacle for mating with a plug at the end of an electrical cable on the right. *See* Resp. 6; Ex. 2031 ¶¶ 60–61; Ex. 2036, 2. The above image also shows various switch positions corresponding to various CCT outputs, i.e., “two switches down” for 3000 K, “one switch up / one switch down” for 3500 K, and “two switches up” for 4000 K. *See* Resp. 6; Ex. 2031 ¶ 62; Ex. 2036, 2.

As further support, Patent Owner provides the following annotated version of the ’336 patent’s Figure 1J:

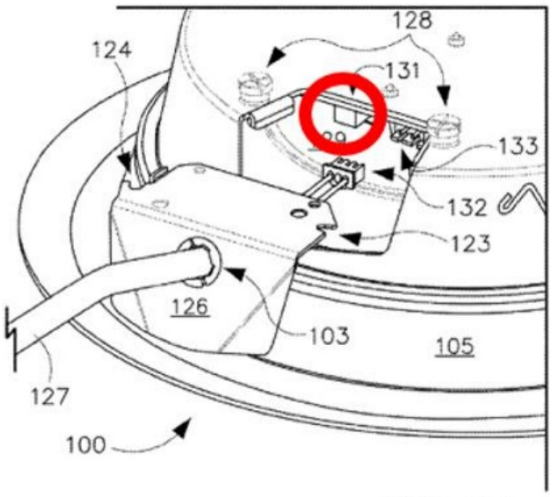

FIG. 1J

Figure 1J illustrates a portion of luminaire 100 including cover 126 and associated access aperture 129 with cover 126 removed and the following components visible through access aperture 129: dual inline pin switch 131 that comprises individual switches 210 (not shown in Figure 1J) and receptacle 133 that mates with plug 132 at the end of electrical cable 127. Ex. 1001, 5:64–6:16, 7:22–24, Fig. 1J. The above annotated version of Figure 1J includes a red circle around switch 131. *See* Resp. 7; Ex. 2031 ¶ 61.

Dr. Krames testifies that the DIP switch “used in the PR8 is an embodiment of the switch” recited in claims 13, 15, and 16 of the ’336 patent. Ex. 2031 ¶ 63.

Patent Owner asserts that later products “introduced a CCT switch located in the luminaire’s junction box disposed remotely from the actual luminaire, consistent with the design recited in claim 1” and depicted in Figure 10 in the ’336 patent. Resp. 7–8. As support, Patent Owner provides

the following image from a brochure for the "Halo Canless Recessed Lighting" products:

The above image shows a luminaire connected by an electrical cable to a junction box and a switch on or in the junction box with the switch circled and identified as having "5 seleCCTable colors." *See* Resp. 7; Ex. 2031 ¶¶ 67–69; Ex. 2037, 3.

As further support, Patent Owner provides the following annotated version of the '336 patent's Figure 10:

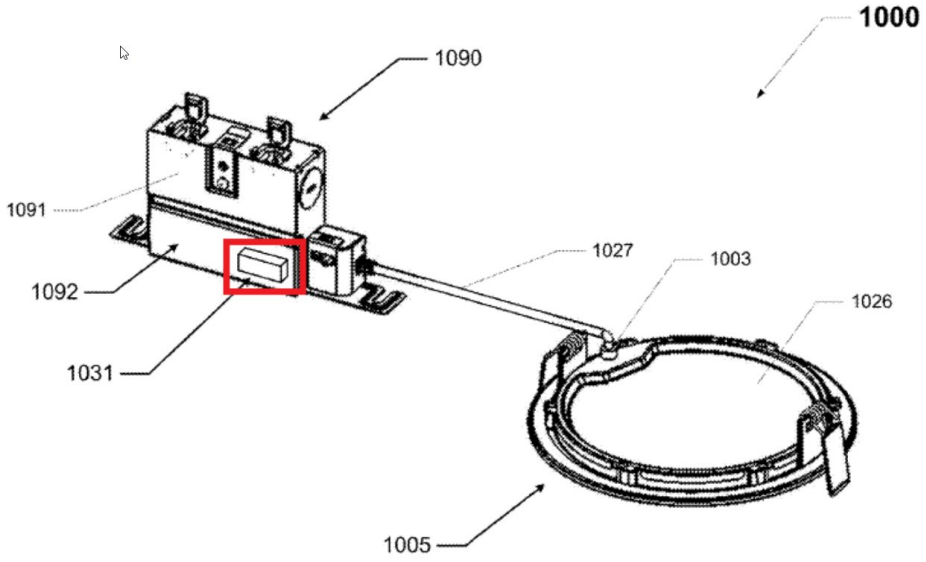

FIG. 10

Figure 10 illustrates luminaire 1000 including electrical cable 1027, switch 1031, and junction box 1090 with one wall of junction box 1090

"removed to show the switch 1031 disposed within the cavity 1092 formed by the walls 1091 of the junction box 1090." Ex. 1001, 3:28–29, 12:33–46, 12:56–61, Fig. 10. The above annotated version of Figure 10 includes a red rectangle around switch 1031. *See* Resp. 8.

Patent Owner asserts that the Halo products with CCT switches "received industry awards and praise from market leaders, including Home Depot." Resp. 9. Patent Owner quotes a 2018 Home Depot announcement about Home Depot innovation award winners as follows: "Eaton's Halo Color Selectable LED Downlights allow users to change the light's color temperature with a flick of a switch, bypassing the need for professionals to carry different lighting products for different color temperatures." *Id.* (quoting Ex. 2040, 2). According to Patent Owner, "Home Depot called the design 'a great, huge, awesome innovation, and a great value for our customers.'" *Id.* (emphasis omitted) (quoting Ex. 2040, 2).

Additionally, Patent Owner cites a "2019 ADEX Award for Design Excellence" given for "superior product design and quality" to the "Halo MicroEdge HLB LED Ultra-Thin Recessed Downlight." Resp. 9 (citing Ex. 2041); *see* Ex. 2041.

(iii) <u>Analysis</u>

Industry praise tends to show nonobviousness because "[i]ndustry participants, especially competitors, are not likely to praise an obvious advance over the known art." *WBIP, LLC v. Kohler Co.*, 829 F.3d 1317, 1334 (Fed. Cir. 2016).

Regarding the ADEX award given to the "Halo MicroEdge HLB LED Ultra-Thin Recessed Downlight," Patent Owner fails to explain (1) how that product relates to any challenged claim, (2) whether that product included a

CCT switch, (3) what entities comprised ADEX, and (4) what metrics ADEX employed to evaluate products. *See, e.g.*, Resp. 3–9; Ex. 2031 ¶¶ 58–71. Hence, Patent Owner fails to show that the "Halo MicroEdge HLB LED Ultra-Thin Recessed Downlight" is "coextensive (or nearly coextensive)" with any challenged claim or that any industry praise resulted directly from "the unique characteristics of the claimed invention" rather than other factors "unrelated to the quality of the patented subject matter." *See* Resp. 3–9; Ex. 2031 ¶¶ 58–71; Ex. 2041; *Huang*, 100 F.3d at 140; *Lectrosonics*, IPR2018-01129, Paper 33 at 33. Based on Patent Owner's evidence and arguments, we see no reason to accord any weight to the ADEX award when considering whether a claimed invention would have been obvious. *See* Resp. 3–9; Ex. 2031 ¶¶ 58–71; Ex. 2041.

As for the Halo Commercial PR8 family of products, the brochures Patent Owner cites show that the family includes mostly light fixtures lacking CCT switches, thus indicating limited adoption of that feature. *See* Ex. 2036, 3; Ex. 2037, 3–5. As an example, page 3 in the brochure for the "Halo Commercial PR8 8" LED Fixture" identifies the following four product categories: (1) "New construction/Remodel"; (2) "Retrofit/ International"; (3) "Surface mount"; and (4) "LED module." Ex. 2036, 3. The brochure notes that only the "LED module" products have CCT switches. *Id.* As another example, page 5 in the brochure for the "Halo Canless Recessed Lighting" products identifies six products or product categories with only one product specified as having the "SeleCCTable" feature. Ex. 2037, 5.

In any event, assuming that some members of the Halo Commercial PR8 family of products are "coextensive (or nearly coextensive)" with

claim 1, the Home Depot announcement about Home Depot innovation award winners does not constitute praise from a disinterested industry participant. *See* Ex. 2040, 1–2. Home Depot has an interest in touting products purchased from its vendors and sold to its customers. The Home Depot announcement serves as an advertisement for the discussed products. *Id.* Also, Patent Owner does not assert that Home Depot speaks for any industry group or trade association. *See* Resp. 9; Ex. 2031 ¶¶ 58, 66.

For these reasons, we accord little weight to Patent Owner's evidence concerning objective indicia of nonobviousness. But even if that evidence carried more weight, it would not outweigh the other evidence considered in the *Graham* analysis. *See Leapfrog Enters., Inc. v. Fisher-Price, Inc.*, 485 F.3d 1157, 1162 (Fed. Cir. 2007) (affirming an obviousness determination "given the strength of the prima facie obviousness showing" even though the patentee "provided substantial evidence of commercial success, praise, and long-felt need").

(h) Conclusion About Patentability for Claim 1

For the reasons discussed above, we determine that Chaimberg teaches the invention covered by claim 1 but does not anticipate claim 1. *See supra* §§ IV.F.2(a)–(f). Further, for the reasons discussed above, we accord little weight to Patent Owner's evidence concerning objective indicia of nonobviousness. *See supra* §§ IV.F.2(g)(iii). Hence, Petitioner has shown by a preponderance of the evidence that claim 1 is unpatentable under § 103 because the claim would have been obvious over Chaimberg.

3. Dependent Claim 3

Claim 3 depends directly from claim 1 and specifies that "each [switch] position of the plurality of positions is discrete." Ex. 1001, 14:47–48.

Petitioner contends that Chaimberg discloses claim 3's limitation because Chaimberg's LED light fixture includes selector switch 18 that Chaimberg describes as "a toggle switch provided with a slide button 31 . . . displaceable to three switch positions." Pet. 30 (quoting Ex. 1003, 4:35–37) (citing Ex. 1003, 4:30–63; Ex. 1004 ¶¶ 114–115).

Patent Owner makes no arguments specific to claim 3. *See, e.g.*, Resp. 48–55; Sur-reply 20–25.

For the reasons stated by Petitioner and supported by Dr. Eden's testimony, we agree with Petitioner that Chaimberg discloses claim 3's limitation. *See* Pet. 30; Ex. 1004 ¶¶ 113–116.

4. Dependent Claim 6

Claim 6 depends directly from claim 1 and specifies that "the switch is integrated with the electrical cable." Ex. 1001, 14:63–64.

Petitioner contends that Chaimberg discloses claim 6's limitation because Chaimberg's LED light fixture includes selector switch 18 that Chaimberg describes as "mounted" either "on" or "in" cable 15. Pet. 31 (citing Ex. 1003, 3:49–53 (using the word "on"), code (57) (using the word "in"); Ex. 1004 ¶¶ 117–119). Further, Petitioner asserts that an ordinarily skilled artisan "would have understood that the switch 18 is 'integrated with' the electrical cable because the switch controls the CCT output of Chaimberg's light fixture." *Id.* (citing Ex. 1004 ¶¶ 118–119).

Patent Owner makes no arguments specific to claim 6. *See, e.g.*, Resp. 48–55; Sur-reply 20–25.

For the reasons stated by Petitioner and supported by Dr. Eden's testimony, we agree with Petitioner that Chaimberg discloses claim 6's limitation. *See* Pet. 31–32; Ex. 1004 ¶¶ 117–120.

5. DEPENDENT CLAIM 7

Claim 7 depends directly from claim 1 and further requires "a junction box comprising at least one wall that forms a second cavity, wherein the switch is disposed within the second cavity, wherein the second end of the electrical cable is coupled to the switch." Ex. 1001, 14:65–15:2.

(a) Petitioner's Contentions

Petitioner contends that Chaimberg "discloses or at least would have rendered obvious" claim 7's limitations for several related reasons. *See* Pet. 33–35; Reply 10–11. First, Petitioner asserts that Chaimberg's LED light fixture includes driver housing 16 corresponding to the claimed "junction box." Pet. 33 (citing Ex. 1003, 4:30–32). According to Petitioner, "Chaimberg's driver housing 16 is a junction box because it houses driver circuit 20" with "electrical components for driving the LEDs 11 of the light fixture." *Id.* (citing Ex. 1001, 11:44–47; Ex. 1003, 3:23–24, 4:30–32).

Second, Petitioner asserts that Chaimberg's driver housing 16 includes the claimed "at least one wall that forms a second cavity" because "driver circuit 20 is disposed inside of the driver housing 16." Pet. 33–34 (citing Ex. 1004 ¶ 122).

Third, Petitioner asserts that Chaimberg "discloses or at least would have rendered obvious 'the switch is disposed within the second cavity' of the junction box (i.e., the driver housing)." Pet. 34 (emphasis omitted)

(citing Ex. 1004 ¶¶ 124–125); *see id.* at 35. Petitioner asserts that Chaimberg "states that it was known in the art to mount a CCT switch 'on the driver housing.'" *Id.* at 34 (quoting Ex. 1003, 1:48–49); *see* Reply 4 (citing Ex. 1003, 1:44–50; Ex. 1031, 36:9–18). Petitioner asserts that (1) CCT switches for luminaires were known years before the '336 patent was filed and (2) Chaimberg's discussion of a conventional junction-box-mounted CCT switch does not disparage that arrangement. Reply 5–6 (quoting Ex. 1034, 26:15–17) (citing Ex. 1002, Fig. 10b; Ex. 1011, Fig. 34i; Ex. 1027 ¶¶ 70–74).

Fourth, Petitioner asserts that locating switch 18 inside the driver housing would have been obvious to an ordinarily skilled artisan because the skilled artisan:

> (1) "would have understood the ceiling environment as potentially including elements (e.g., dust, debris, insects, rodents, etc.) that could detrimentally affect the operation of the switch 18";
>
> (2) "would have understood that in certain applications, it would have been desirable to make the switch less accessible to the user"; and
>
> (3) "would have been motivated to put the switch (still coupled to the electrical cable) inside the junction box to prevent users from accessing the switch and to provide additional protection to the switch," e.g., against "dust, debris, insects, rodents, etc."

Pet. 34–35 (emphases omitted) (citing Ex. 1004 ¶¶ 124–125).

According to Petitioner, "disposing the switch 18 within the driver housing 16 would have been an obvious combination of prior-art elements according to known methods to yield predictable results." Pet. 35 (citing Ex. 1004 ¶¶ 126–129).

Fifth, Petitioner asserts that Chaimberg "discloses or at least would have rendered obvious 'wherein the second end of the electrical cable is coupled to the switch.'" Pet. 35; *see* Reply 10–11. Petitioner explains that cable 15 "connects driver circuit 20 to LEDs 11" and live wire 17 "provides line voltage to driver circuit 20." Reply 11 (citing Ex. 1003, 3:23–25, Fig. 1; Ex. 1031, 77:21–25). Petitioner also explains that when "the switch and cable are both disposed in the junction box," an ordinarily skilled artisan "would have understood that the switch would have been coupled to the second end of the cable 15" because:

> (1) connecting an "electrical terminal of the switch to the power source (through the cable 15) is necessary to have a complete circuit"; and
>
> (2) without this connection, "the switch would not be connected to the circuit, and unable to control the flow of current to the LEDs."

Pet. 35 (citing Ex. 1004 ¶ 128); Reply 11 (citing Ex. 1003, 4:30–5:10; Ex. 1004 ¶¶ 128–129).

(b) <u>Patent Owner's Contentions</u>

Patent Owner disputes that Chaimberg discloses or renders obvious claim 7's limitations. *See* Resp. 52–55; Sur-reply 24–25. In particular, Patent Owner contends that Chaimberg "warns against locating a switch in a junction box (or 'driver housing')" because Chaimberg "criticizes designs that would allow wiring near the driver housing based on both safety and convenience." Resp. 52 (citing Ex. 1003, 1:44–2:12; Ex. 2031 ¶ 173). According to Patent Owner, "all that Chaimberg does is disparage locating the CCT switch in a junction box, and such disparagement (due to the risk of injury) constitutes teaching away." Sur-reply 24.

Further, Patent Owner asserts that Chaimberg is "silent" as to how to locate a switch on a driver housing and how a switch would be "coupled to [an] electrical cable" of the luminaire. Resp. 53 (alteration by Patent Owner) (citing Ex. 2031 ¶¶ 173 n.10, 174–178). According to Patent Owner, Petitioner "does not address these issues, and simply argues that Chaimberg describes enclosing 'other' components (i.e., not the switch) inside the driver housing." *Id.* (emphasis omitted) (citing Pet. 34).

Patent Owner contends that Petitioner "concedes that Chaimberg desires 'increas[ing] accessibility' to the switch" but inconsistently asserts that an ordinarily skilled artisan would have desired to "make the switch less accessible to the user." Resp. 53 (alteration by Patent Owner) (emphasis omitted) (quoting Pet. 34). Patent Owner contends that Petitioner's "purported 'motivations' for modifying Chaimberg are likewise contradictory and based on hindsight." *Id.* According to Patent Owner, locating a CCT switch inside a driver housing to protect against "dust, debris, insects, rodents, etc.," as Petitioner proposes, "mirrors the reasons described in Chaimberg for not locating the switch on or within the driver housing." *Id.* at 53–54 (emphasis omitted) (citing Ex. 2030, 203:18–204:1).

Additionally, Patent Owner contends that Chaimberg "contains no disclosure concerning the portion of the claim requiring 'the second end of the electrical cable is coupled to the switch'" and that Petitioner "fails to describe where or how Chaimberg's cable 15 'ends in the driver housing' according to its vague modification with a switch also 'disposed in the junction box.'" Resp. 54 (quoting Pet. 35).

Further, Patent Owner asserts that Petitioner erroneously assumes that claim 7 "would be met because the switch must connect 'to the power source

(through cable 15)'" because "Chaimberg's design receives power from 'live wire 17' not cable 15." Resp. 54 (quoting Pet. 35). According to Patent Owner, Chaimberg fails to "disclose any details concerning coupling features of its disclosed switch," and Petitioner "does not fill in these gaps." *Id.* at 54–55 (citing Ex. 2030, 209:6–11, 214:8–11, 218:16–24).

(c) Analysis

For the reasons explained below, we agree with Petitioner that Chaimberg renders claim 7's limitations obvious. *See* Pet. 33–35; Reply 10–11; Ex. 1004 ¶¶ 72, 102, 121–130; Ex. 1027 ¶¶ 6–7, 18–22.

First, Chaimberg's LED light fixture includes driver housing 16 with driver circuit 20 that receives "line voltage from live wire 17" and "drives either of the LED sets." Ex. 1003, 3:23–25, 4:32–34, Fig. 1; *see* Ex. 1004 ¶¶ 72, 122. Driver housing 16 corresponds to the "junction box" required by claim 7. Ex. 1004 ¶ 122; Ex. 1027 ¶ 18.

Second, as shown in Chaimberg's Figures 1 and 2, driver housing 16 provides an enclosure "comprising at least one wall that forms a second cavity" according to claim 7. Ex. 1003, Figs. 1–2; *see* Ex. 1004 ¶¶ 122–123; Ex. 1027 ¶ 18.

Third, Chaimberg discloses a selector switch "mounted on the driver housing to select a desired color temperature of the LED light fixture." Ex. 1003, 1:48–50, 3:29–32; *see* Ex. 1004 ¶¶ 72, 124–125; Ex. 1027 ¶ 20.

Fourth, we disagree with Patent Owner that Chaimberg "disparage[s] locating the CCT switch in a junction box." *See* Sur-reply 24. Instead, Chaimberg discourages locating a CCT switch on a driver housing/junction box that is not readily accessible after installation, e.g., because the fixture mounting hole does not permit removal after installation or because the

driver housing/junction box has been immovably secured to a building structure at a hard-to-reach location. *See* Ex. 1003, 1:44–2:13, 3:29–48; Ex. 1027 ¶ 19.

Specifically, Chaimberg explains the disadvantages of locating a CCT switch on a driver housing/junction box that is not readily accessible after installation as follows:

> Some LED light fixtures with two or more sets of color LED's, for installation in ceilings, are provided with a driver housing which is usually positioned resting on the rear surface of the ceiling sheeting with a long feed wire loose over the rear surface of the sheeting material. A switch is mounted on the driver housing to select a desired color temperature of the LED light fixture. To change the switch setting it is necessary to retract the housing by pulling the light fixture to position the driver housing adjacent the mounting hole and then with the hand to manipulate the driver housing, which is not visible, to be able to pull it out of the hole. Because the housings of LED light fixture are of different diameter sizes the fixture mounting hole may be too small to provide easy access to the drive housing and to manipulate the housing to retract it from the fixture mounting hole. This is not a task that is suitable for many people and damage can be caused to the ceiling sheeting material about the mounting hole. Still further, there is a hazard presented by the live wire connected to the driver circuit inside the driver housing, particularly if there is a fault in the wiring. There is also a hazard of working on a ladder to be close to the ceiling to remove the diver housing from the fixture mounting hole. Manipulating the driver housing is therefore not recommended for safety reasons.
>
> In a situation where the driver housing is immovably secured to a rigid structural member at a desired location where the ceiling fixture is to be secured further problems are presented. In such an installation the user person must select the light mood desired at the time of installation []as access to the switch may not be possible as it would not be visible. Also,

> as pointed out above, after the ceiling construction is complete the mounting hole may be too small to provide access to the driver housing. This creates a problem if the end user desires to later change the color of the light generated by the LED light fixture and such would require the skill of an electrician to do so and repair to the ceiling sheeting material, if damaged in the process.

Ex. 1003, 1:44–2:13; *see id.* at 3:29–48.

Chaimberg does not discourage locating a CCT switch on a driver housing/junction box where the driver housing/junction box requires no "manipulating" when changing a switch setting. *See* Ex. 1003, 1:44–2:13, 3:29–48; Ex. 1027 ¶ 19. Moreover, a known arrangement "does not become patentable simply because it has been described as somewhat inferior to some other product for the same use." *In re Gurley*, 27 F.3d 551, 553 (Fed. Cir. 1994).

Fifth, although Chaimberg does not disclose locating a CCT switch inside a driver housing/junction box, an ordinarily skilled artisan would have understood that CCT switch location is "a matter of design choice" determined by (1) "the industrial, commercial, public, or residential application at hand" and (2) "practical considerations such as the location of the luminaire, and the desired level of accessibility." Ex. 1004 ¶ 126; Ex. 1027 ¶¶ 6–7, 21; *see* Ex. 1004 ¶ 129. For instance, "accessibility is of low priority" in some applications, such as high-bay commercial buildings used as shipping facilities or warehouses. Ex. 1027 ¶ 6; *see id.* ¶ 21; Ex. 1004 ¶ 126. "In other situations, such as restaurants or residential installations, the CCT switch will often be accessible to luminaire customers," e.g., to permit a restaurant to change the "CCT value of the

lighting after dusk each evening." Ex. 1027 ¶¶ 7, 42; *see* Ex. 1004 ¶¶ 127, 220.

Additionally, an ordinarily skilled artisan would have understood that "installation of the switch in the driver housing or junction box" was "standard for some applications." Ex. 1004 ¶ 125 (emphasis omitted); *see id.* ¶ 129; Ex. 1003, 1:48–50, 3:29–32. For example, "placing the switch within the junction box could protect the switch from elements like dust, debris, insects, and rodents." Ex. 1004 ¶ 125.

Sixth, we disagree with Patent Owner that locating a CCT switch inside a driver housing/junction box to protect against "dust, debris, insects, rodents, etc.," as Petitioner proposes, "mirrors the reasons described in Chaimberg for not locating the switch on or within the driver housing." *See* Resp. 53–54 (emphasis omitted). Chaimberg does not discuss "dust, debris, insects, [or] rodents." *See, e.g.*, Ex. 1003, 1:44–2:13, 3:29–48.

Seventh, we disagree with Patent Owner that Petitioner relies on hindsight for the proposed modification. *See* Resp. 53. An explicit analysis "whether there was an apparent reason" for a modification reduces "the risk of . . . falling prey to hindsight bias." *See KSR*, 550 U.S. at 418, 421. Here, Petitioner and Dr. Eden provide an explicit analysis why an ordinarily skilled artisan would have been motivated to locate a CCT switch inside a driver housing/junction box, i.e., to "protect the switch from elements like dust, debris, insects, and rodents." Ex. 1004 ¶ 125; *see* Pet. 34 (citing Ex. 1004 ¶ 125).

Eighth, Chaimberg's LED light fixture includes cable 15 with wires secured at end 15' to the two sets of LEDs 11 to "supply driving current to each of the sets" and secured at end 15" to driver circuit 20 in driver

housing 16. Ex. 1003, 3:18–24, code (57), Figs. 1, 3; *see* Ex. 1004 ¶ 102; Ex. 1027 ¶ 92. Driver circuit 20 receives "line voltage from live wire 17." Ex. 1003, 3:23–25; *see* Ex. 1004 ¶¶ 102, 122. Selector switch 18 is mounted on cable 15. Ex. 1003, 3:49–50, code (57), Fig. 1; *see* Ex. 1004 ¶¶ 70, 105, 107, 128, 139, 145.

An ordinarily skilled artisan would have understood that with switch 18 located inside driver housing 16, "the second end of the electrical cable is coupled to the switch" according to claim 7 because supplying driving current to the two sets of LEDs requires a complete circuit through the switch and the cable. *See* Ex. 1004 ¶ 128.

Ninth, Dr. Krames conceded that an ordinarily skilled artisan would have understood "how to physically place a switch within a junction box." Ex. 1031, 164:10–12. Hence, Patent Owner's contentions concerning Chaimberg's alleged failure to "disclose any details concerning coupling features of its disclosed switch" do not undermine Petitioner's position. *See* Resp. 53–55. Further, that "it would take some creativity to carry out" a proposed modification "does not defeat" an obviousness determination. *Facebook, Inc. v. Windy City Innovations, LLC*, 953 F.3d 1313, 1333 (Fed. Cir. 2020).

For the reasons stated above, we determine that Chaimberg renders claim 7's limitations obvious. *See* Pet. 33–35; Reply 10–11; Ex. 1004 ¶¶ 72, 102, 121–130; Ex. 1027 ¶¶ 6–7, 18–22.

6. Dependent Claim 8

Claim 8 reads as follows (with formatting added for clarity):

> 8. The luminaire of claim 1, further comprising:

> a junction box comprising at least one wall that forms a second cavity, wherein the second cavity has disposed therein at least one additional electrical component;
>
> and an additional electrical cable,
>
> wherein the switch is coupled to the second end of the electrical cable,
>
> wherein the additional electrical cable is coupled to the switch and to the at least one additional electrical component,
>
> wherein the switch is disposed outside the second cavity.

Ex. 1001, 15:3–11.

Petitioner contends that Chaimberg "discloses or at least would have rendered obvious" claim 8's limitations for several related reasons. *See* Pet. 36–37. First, for the reasons discussed for claim 7, Petitioner asserts that "it would have been obvious for" an ordinarily skilled artisan "to locate Chaimberg's CCT switch on or in" a driver housing/junction box "comprising at least one wall that forms a second cavity." *Id.* at 36; *see supra* § IV.F.5(a).

Second, Petitioner asserts that Chaimberg's LED light fixture includes driver housing 16 with driver circuit 20 that receives "line voltage from live wire 17." Pet. 36 (quoting Ex. 1003, 3:23–25). Petitioner maps claim 8's "additional electrical component" to driver circuit 20. *Id.* Petitioner maps claim 8's "additional electrical cable" to live wire 17. *Id.*

Third, Petitioner asserts that an ordinarily skilled artisan "would have understood" that:

(a) "the driver circuit would have been an 'additional electrical component' and the 'live wire 17' would function as 'an additional electrical cable' located within the junction box"; and

(b) "Chaimberg's 'live wire 17' is coupled to the 'driver circuit 20' because it supplies 'line voltage' to the driver circuit and LED light fixture."

Pet. 36.

Fourth, Petitioner asserts that "it would have been obvious for" an ordinarily skilled artisan "to 'couple' the live wire to the CCT switch when the switch is located in/on the driver housing" because "the CCT switch controls the power provided to the LEDs." Pet. 36–37.

Fifth, Petitioner asserts that "Chaimberg discloses that its CCT switch could be mounted on the outside of [the] driver housing." Pet. 37 (citing Ex. 1003, 1:44–50, 3:28–32).

Patent Owner makes no arguments specific to claim 8. *See, e.g.*, Resp. 48–55; Sur-reply 20–25. Nonetheless, the burden remains on Petitioner to demonstrate unpatentability. *See Dynamic Drinkware*, 800 F.3d at 1378.

Based on the evidence and Petitioner's arguments regarding claim 8, Petitioner has not shown that Chaimberg discloses or renders obvious claim 8's limitations. *See* Pet. 36–37; Ex. 1004 ¶¶ 131–134. In particular, claim 8 requires that the "luminaire" include an "additional electrical cable." Ex. 1001, 15:3–11. Petitioner maps claim 8's "additional electrical cable" to live wire 17. Pet. 36; *see* Ex. 1004 ¶ 132. Chaimberg discloses that live wire 17 supplies "line voltage" to driver circuit 20, thus indicating that live wire 17 constitutes existing house or building wiring. Ex. 1003, 3:23–25; Ex. 1031, 96:4–97:3.

Petitioner acknowledges that live wire 17 supplies "line voltage" to driver circuit 20. Pet. 36 (quoting Ex. 1003, 3:23–25); Reply 11 (citing

Ex. 1003, 3:23–25). And Petitioner acknowledges that "house wiring is not a cable of the luminaire." Reply 17.

Additionally, Dr. Eden states that "Globe Electric Company, Inc. (the assignee of Chaimberg) manufactures a number of LED Recessed Luminaires (sold through Home Depot) that embody Chaimberg's claims." Ex. 1027 ¶ 12. Petitioner asserts that "Globe (Chaimberg's assignee) manufactures luminaires embodying, and marked with, Chaimberg." Reply 6. Petitioner and Dr. Eden identify examples of Globe luminaires. Reply 6–8; Ex. 1027 ¶¶ 12–13; Ex. 1044, 1; Ex. 1045, 1; *see* Reply v (Exhibit List) (describing Ex. 1044 as a website listing for "Globe Product No. 91479" and Ex. 1045 as a website listing for "Globe Product No. 91477"). Those examples of Globe luminaires lack a wire that corresponds to live wire 17 disclosed in Chaimberg. *See* Reply 7; Ex. 1027 ¶ 12; Ex. 1044, 1; Ex. 1045, 1.

For instance, the Reply includes the following photograph of the "Globe No. 92291":

Globe No.92291

The above photograph illustrates the "Globe No. 92291" with only one wire or cable extending from the rectangular junction box, i.e., a wire or cable extending from the rectangular junction box toward the circular light fixture. *See* Reply 7; Ex. 1027 ¶ 12.

Although Chaimberg's live wire 17 may "function as 'an additional electrical cable' located within the junction box," as Petitioner asserts, Petitioner does not show that live wire 17 constitutes part of Chaimberg's LED light fixture corresponding to the claimed "luminaire" rather than existing house or building wiring. *See* Pet. 36–37; Ex. 1003, 3:23–25; Ex. 1004 ¶¶ 131–134; Ex. 1031, 96:4–97:3. The "live wire that comes in from the house is not a cable of the luminaire." Ex. 1031, 96:19–20; *see id.* at 97:1–3.

Claim 8 requires "an additional electrical cable" that constitutes part of the claimed "luminaire." Ex. 1001, 15:3, 15:7. For the reasons discussed above, Petitioner fails to establish that Chaimberg's live wire 17 constitutes part of Chaimberg's LED light fixture corresponding to the claimed "luminaire" rather than existing house or building wiring. *See* Pet. 36–37; Ex. 1003, 3:23–25; Ex. 1004 ¶¶ 131–134; Ex. 1031, 96:4–97:3. Further, Petitioner fails to offer a reason to modify Chaimberg's LED light fixture to include "an additional electrical cable" according to claim 8. *See* Pet. 36–37; Ex. 1004 ¶¶ 131–134.

For these reasons, Petitioner has not shown that Chaimberg discloses or renders obvious claim 8's limitations. *See* Pet. 36–37; Ex. 1004 ¶¶ 131–134.

7. Dependent Claim 9

Claim 9 depends directly from claim 1 and specifies that "the switch is a slide switch." Ex. 1001, 15:12–13.

Petitioner contends that Chaimberg discloses claim 9's limitation because Chaimberg's LED light fixture includes selector switch 18 that Chaimberg describes as "a toggle switch provided with a slide button 31." Pet. 37 (quoting Ex. 1003, 4:35) (citing Ex. 1004 ¶¶ 135–136).

Patent Owner makes no arguments specific to claim 9. *See, e.g.*, Resp. 48–55; Sur-reply 20–25.

For the reasons stated by Petitioner and supported by Dr. Eden's testimony, we agree with Petitioner that Chaimberg discloses claim 9's limitation. *See* Pet. 37; Ex. 1004 ¶¶ 135–137.

8. Dependent Claim 11

Claim 11 depends directly from claim 1 and specifies that "the switch is inaccessible when the housing is installed." Ex. 1001, 15:16–17.

Petitioner contends that Chaimberg discloses claim 11's limitation because Chaimberg's LED light fixture includes "cable 15 (where the switch 18 is mounted)" located "on the inner side of the 'ceiling sheeting material 14' and inaccessible when the LED light fixture is installed." Pet. 38 (quoting Ex. 1003, 4:23–24) (citing Ex. 1003, 4:16–29, Fig. 2; Ex. 1004 ¶¶ 141–142).

Patent Owner makes no arguments specific to claim 11. *See, e.g.*, Resp. 48–55; Sur-reply 20–25.

For the reasons stated by Petitioner and supported by Dr. Eden's testimony, we agree with Petitioner that Chaimberg discloses claim 11's limitation. *See* Pet. 38–39; Ex. 1004 ¶¶ 138–143.

9. Dependent Claim 12

Claim 12 depends directly from claim 1 and specifies that "the switch is accessible to a user when the housing is removed from its installed location." Ex. 1001, 15:18–20.

Petitioner contends that Chaimberg discloses claim 12's limitation because Chaimberg's LED light fixture allows switch 18 to become "accessible and visible by simply withdrawing the light fixture from" the ceiling. Pet. 39 (citing Ex. 1003, code (57); Ex. 1004 ¶¶ 144–147).

Patent Owner makes no arguments specific to claim 12. *See, e.g.*, Resp. 48–55; Sur-reply 20–25.

For the reasons stated by Petitioner and supported by Dr. Eden's testimony, we agree with Petitioner that Chaimberg discloses claim 12's limitation. *See* Pet. 39; Ex. 1004 ¶¶ 144–148.

10. Independent Claim 13 and Dependent Claim 15

For the reasons discussed above, a preponderance of the evidence establishes February 19, 2016, as the effective filing date for claims 13 and 15. *See supra* §§ IV.E.2(c), IV.E.3(c), IV.E.5–IV.E.6. That effective filing date precedes Chaimberg's April 27, 2018, filing date, thus disqualifying Chaimberg as prior art for claims 13 and 15. *See* Ex. 1003, code (22); 35 U.S.C. § 102(a)(2). Because Chaimberg does not qualify as prior art for claims 13 and 15, Petitioner has not shown the unpatentability of these claims based on Chaimberg.

11. Dependent Claims 17, 18, and 19

Claims 17, 18, and 19 depend directly from claim 13 and, therefore, "incorporate by reference all the limitations of" claim 13. Ex. 1001, 16:14–24; *see* 35 U.S.C. § 112(d). Because claims 17, 18, and 19

"incorporate by reference all the limitations of" claim 13 and because "each claim is an independent invention," we initially consider Chaimberg's disclosures with respect to claim 13 and then consider Chaimberg's disclosures with respect to claims 17, 18, and 19 to decide the anticipation and obviousness issues for these dependent claims. *See Laitram Corp. v. NEC Corp.*, 62 F.3d 1388, 1392 (Fed. Cir. 1995); *infra* §§ IV.F.11(a)–(d).

(a) Claim 13

(i) Claim 13's Preamble

Claim 13 recites "[a] switch for controlling a correlated color temperature (CCT) of light emitted by a luminaire." Ex. 1001, 15:21–22 (preamble).

Petitioner contends that Chaimberg discloses claim 13's preamble because Chaimberg's LED light fixture includes selector switch 18 "for controlling a correlated color temperature (CCT) of light emitted by a luminaire." Pet. 40 (citing Ex. 1004 ¶¶ 149–152).

Patent Owner makes no arguments specific to claim 13's preamble. *See, e.g.*, Resp. 44–48; Sur-reply 14–18.

Generally, a preamble does not limit a claim. *Allen Eng'g*, 299 F.3d at 1346. We need not decide whether claim 13's preamble limits the claim because, because, for the reasons stated by Petitioner and supported by Dr. Eden's testimony, we agree with Petitioner that Chaimberg discloses claim 13's preamble. *See* Pet. 40; Ex. 1004 ¶¶ 149–152.

(ii) Limitation 13a

Claim 13 recites "a body." Ex. 1001, 15:24 (limitation 13a).

a. Petitioner's Contentions

Petitioner contends that Chaimberg discloses limitation 13a because Chaimberg's selector switch 18 is "a toggle switch provided with a slide button 31 [that is] displaceable to three switch positions" within "a body" where "the slide button 31 is located." Pet. 40 (alteration by Petitioner) (quoting Ex. 1003, 4:34–37) (citing Ex. 1004 ¶ 154); *see* Reply 20, 23. As support, Petitioner provides the following highlighted excerpt from Chaimberg's Figure 1:

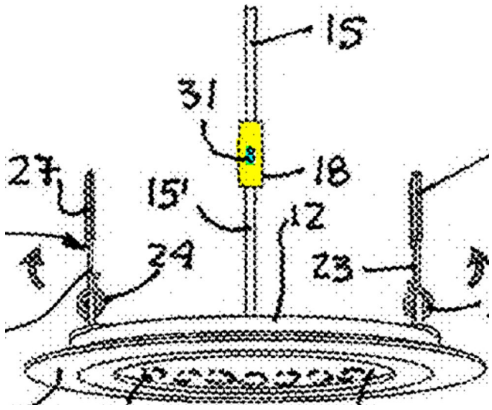

Figure 1 illustrates ceiling-mountable LED light fixture 10 with selector switch 18 including slide button 31. Ex. 1003, 2:51–57, 2:66–3:2, 3:18–25, 3:49–64, 4:30–37, Fig. 1. The above highlighted excerpt from Figure 1 includes yellow highlighting over the structure that Petitioner identifies as switch 18's body and blue highlighting over slide button 31. *See* Pet. 41; Reply 21; Ex. 1004 ¶ 154.

b. Patent Owner's Contentions

Patent Owner contends that Petitioner "identifies the switch 'body' in Chaimberg as the outer surface of the 'dashed rectangular box' labeled 18" and that "box 18 depicts an outer casing within which a switch and/or other components may or may not exist." Resp. 44–45 (emphasis omitted) (citing Ex. 2031 ¶¶ 153–156); *see id.* at 48; Sur-reply 15, 17. Patent Owner

contends that the "outer casing itself is not a switch 'body' on which switch features are disposed, and it does not 'electrically couple' to anything." Resp. 46 (citing Ex. 2031 ¶¶ 154–155); *see* Sur-reply 15 (citing Ex. 2031 ¶¶ 151–157). According to Patent Owner, "Chaimberg does not provide any disclosure concerning what is inside box 18, or any details concerning the structure of the disclosed switch." Resp. 46.

c. Analysis

For the reasons explained below, Chaimberg teaches a switch with "a body" according to limitation 13a. *See* Pet. 40–41; Ex. 1004 ¶¶ 105, 110, 114, 118, 150, 153–155; Ex. 1027 ¶¶ 84–87, 89–90, 92. Specifically, Chaimberg discloses that LED light fixture 10 includes selector switch 18. Ex. 1003, 3:14–23, 3:49–51, Fig. 1; *see* Ex. 1004 ¶¶ 105, 118, 150. Chaimberg describes selector switch 18 as "a toggle switch provided with a slide button 31 having two conducting arms 32 and 33 and displaceable to three switch positions." Ex. 1003, 4:34–37, Fig. 3; *see* Ex. 1004 ¶¶ 110, 114, 154; Ex. 1027 ¶¶ 87, 92.

An ordinarily skilled artisan would have understood that switch 18 includes "a body" according to limitation 13a because all three-position toggle switches include "a body." Ex. 1004 ¶¶ 154–155; Ex. 1027 ¶¶ 85, 89–90; Ex. 2030, 223:24–224:18.

Contrary to Patent Owner's contentions, reference numeral 18 in Chaimberg identifies a selector switch rather than a "dashed rectangular box" within which "a switch and/or other components may or may not exist." Ex. 1003, 3:49–54, 4:25–29, 4:34–37, Fig. 1; *see* Resp. 44–45.

(iii) Limitation 13b

Claim 13 recites "at least one first coupling feature disposed on the body, wherein the at least one first coupling feature is configured to electrically couple to an electrical cable of the luminaire." Ex. 1001, 15:25–28 (limitation 13b).

a. Petitioner's Contentions

Petitioner contends that Chaimberg discloses limitation 13b because Chaimberg's selector switch 18 is "mounted on the cable 15 adjacent to the LED light fixture housing 12." Pet. 41 (quoting Ex. 1003, 3:49–51); *see* Reply 22 (citing Ex. 1003, 2:38–40). Further, Petitioner asserts that an ordinarily skilled artisan "would have understood that the switch 18 includes at least one coupling feature and is configured to electrically couple to the electrical cable 15" because "the switch 18 is mounted on the electrical cable 15 and is used to adjust the CCT output of the LED light fixture." Pet. 42 (citing Ex. 1004 ¶¶ 157–158); *see* Reply 22 (citing Ex. 1003, 4:30–5:10; Ex. 2030, 210:1–5).

b. Patent Owner's Contentions

Patent Owner contends that Petitioner assumes with "little analysis" that Chaimberg's selector switch 18 includes "at least one first coupling feature" according to limitation 13b. Resp. 47 (citing Pet. 41–42). Patent Owner contends that "Chaimberg does not describe any such feature." *Id.* (citing Ex. 2030, 209:6–11, 214:8–11, 218:16–24, 220:18–221:1).

Further, Patent Owner asserts that Chaimberg's selector switch could be implemented as a "wireless" switch and operable without a "coupling" to the cable. Resp. 48 (citing Ex. 2030, 212:8–213:2, 218:25–219:21,

220:18–221:1; Ex. 2031 ¶¶ 160–161); *see* Sur-reply 17 (citing Ex. 2030, 212:8–213:2, 218:25–219:21, 220:18–221:1).

Patent Owner also asserts that "Chaimberg's box 18 is simply an outer casing, not a switch body," and "thus would not be understood to 'electrically couple' to anything." Resp. 48 (emphasis omitted) (citing Ex. 2031 ¶ 159); *see* Sur-reply 15, 17 (citing Ex. 2031 ¶¶ 151–157).

c. Analysis

For the reasons explained below, Chaimberg teaches limitation 13b. *See* Pet. 41–42; Reply 21–22; Ex. 1004 ¶¶ 105, 118, 150, 156–159; Ex. 1027 ¶¶ 84–92.

First, Chaimberg discloses that "the selector switch 18 is mounted on the cable 15 adjacent to the LED light fixture housing 12." Ex. 1003, 3:49–51; *see id.* at 2:41, 2:53–54, code (57); Ex. 1004 ¶¶ 105, 118, 150, 157; Ex. 1027 ¶ 88.

Second, based on Chaimberg's disclosure that "the selector switch 18 is mounted on the cable 15," an ordinarily skilled artisan would have understood that "Chaimberg requires the 'coupling' of switch 18 to cable 15, or 'mounting' of switch 18 onto cable 15 by any of the methods by which a switch is electrically connected to a cable or any conductor—namely, terminal connections, a wire pair, pin or tab soldering, compression fittings, etc." Ex. 1004 ¶ 157; *see* Ex. 1027 ¶ 88; Ex. 2030, 209:18–210:4. Also, an ordinarily skilled artisan would have understood that selector switch 18 includes "a body" with "at least one first coupling feature" according to limitation 13b because all three-position toggle switches include "a body" with "at least one first coupling feature." Ex. 1027 ¶¶ 85–90; Ex. 2030, 223:24–224:18.

Third, Chaimberg discloses that the selector switch permits "selective activation of either one of the at least two sets of LED's or both sets of LED's simultaneously to cause the LED light fixture to generate light at a selected desired correlated color temperature (CCT)." Ex. 1003, 2:41–45; *see id.* at code (57); Ex. 1004 ¶¶ 150, 158. More specifically, selector switch 18 "has conductor arms 32, 33 that move based on the position of the slide button 31 to enable current to be controllably directed to Chaimberg's 3000 K and 5000 K LEDs for achieving a desired CCT." Ex. 1027 ¶ 92; *see* Ex. 1003, 4:32–37, Fig. 3.

Fourth, based on Chaimberg's disclosure that the selector switch permits "selective activation" of the LEDs, an ordinarily skilled artisan would have understood that the selector switch is "electrically coupled" to the cable 15 because the "activation" of the LEDs is "electrical." Ex. 1004 ¶ 158; *see* Ex. 1027 ¶ 92. Also, supplying power to the LEDs "would not be possible if a 'first coupling feature' did not exist on the switch." Ex. 1004 ¶ 158.

Fifth, based on Chaimberg's disclosures, we disagree with Patent Owner that Chaimberg's selector switch could be implemented as a "wireless" switch and operable without a "coupling" to the cable. *See* Resp. 48. Chaimberg describes selector switch 18 as "a toggle switch provided with a slide button 31 having two conducting arms 32 and 33 and displaceable to three switch positions." Ex. 1003, 4:34–37, Fig. 3; *see* Ex. 1004 ¶¶ 110, 114, 154; Ex. 1027 ¶¶ 87, 92. "The slide button indicates that Chaimberg intended for the user to manually move the switch button using their finger." Ex. 1027 ¶ 91; *see* Ex. 1004 ¶ 167.

Moreover, Chaimberg does not mention wireless transmission of either a control signal for actuating a switch or power to a light fixture, e.g., through inductive coupling. *See, e.g.*, Ex. 1003, 2:16–5:14, code (57); Ex. 1027 ¶ 92. For instance, "there is no description of a wireless receiver and transmitter." Ex. 1027 ¶ 92. Instead, Chaimberg discloses that live wire 17 supplies "line voltage" to driver circuit 20 that "drives either of the LED sets" via cable 15 and selector switch 18 such that selector switch 18 controls whether the light fixture generates light with a temperature of 3000 K, 4000 K, or 5000 K. Ex. 1003, 3:18–25, 3:49–51, 4:30–5:10; *see* Ex. 1004 ¶¶ 102, 110, 122; Ex. 1027 ¶ 92.

Sixth, contrary to Patent Owner's assertion, reference numeral 18 in Chaimberg identifies a selector switch instead of "simply an outer casing." Ex. 1003, 3:49–54, 4:25–29, 4:34–37, Fig. 1; *see* Resp. 48.

Although Petitioner establishes for § 103 that Chaimberg teaches limitation 13b, Petitioner does not establish for § 102 that the "at least one first coupling feature" in Chaimberg's selector switch 18 is "disposed on the body" instead of "disposed in the body." *See* Pet. 41–42; Reply 21–22; Ex. 1004 ¶¶ 105, 118, 150, 156–159; Ex. 1027 ¶¶ 84–92.

(iv) <u>Limitation 13c</u>

Claim 13 recites "an actuator disposed on the body, wherein the actuator has a range of positions." Ex. 1001, 16:1–2 (limitation 13c).

Petitioner contends that Chaimberg discloses limitation 13c because Chaimberg's selector switch 18 includes slide button 31 that functions as "an actuator disposed on the body" of the switch. Pet. 42 (citing Ex. 1003, 4:30–63). Petitioner also contends that selector switch 18 "has a 'range' of three positions." *Id.* at 44 (citing Ex. 1003, 4:30–63; Ex. 1004 ¶ 168).

Patent Owner makes no arguments specific to limitation 13c. *See, e.g.*, Resp. 44–48; Sur-reply 14–18.

For the reasons stated by Petitioner and supported by Dr. Eden's testimony, we agree with Petitioner that Chaimberg discloses limitation 13c. *See* Pet. 42–44; Ex. 1004 ¶¶ 160–168.

(v) Limitation 13d

Claim 13 recites "wherein each position of the range of positions of the actuator corresponds to a CCT of the light emitted by the luminaire." Ex. 1001, 16:3–5 (limitation 13d).

Petitioner contends that Chaimberg discloses limitation 13d for the reasons Chaimberg discloses limitation 1e. Pet. 44–45 (citing Ex. 1004 ¶¶ 169–171); *see id.* at 30 (citing Ex. 1003, 4:37–5:10, Fig. 3; Ex. 1004 ¶¶ 109–111).

Patent Owner makes no arguments specific to limitation 13d. *See, e.g.*, Resp. 44–48; Sur-reply 14–18.

For the reasons stated by Petitioner and supported by Dr. Eden's testimony, we agree with Petitioner that Chaimberg discloses limitation 13d. *See* Pet. 30, 44–45; Ex. 1004 ¶¶ 109–111, 169–171.

(vi) Summary for Claim 13

For the reasons discussed above, Chaimberg teaches the invention covered by claim 13. *See supra* §§ IV.F.11(a)(i)–(v).

(b) Claim 17

Claim 17 reads as follows (with formatting added for clarity):

> 17. The switch of claim 13, further comprising:
>
> at least one second coupling feature disposed adjacent to the at least one first coupling feature,

> wherein the at least one second coupling feature is configured to electrically couple to an additional electrical cable of the luminaire.

Ex. 1001, 16:14–20.

Petitioner contends that Chaimberg discloses or renders obvious claim 17's limitations for several related reasons. *See* Pet. 45–46. First, for the reasons discussed for claim 8, Petitioner asserts that "it would have been obvious for" an ordinarily skilled artisan "to modify Chaimberg's CCT switch 18 as a junction box mounted CCT switch, wherein an 'additional electrical cable is coupled to the switch.'" *Id.* at 45; *see supra* § IV.F.6.

Second, for the reasons discussed for claim 13, Petitioner asserts that "Chaimberg's CCT switch necessarily includes multiple coupling features that are 'configured to electrically couple to an electrical cable of the luminaire.'" Pet. 45; *see supra* § IV.F.11(a)(iii).a.

Third, Petitioner asserts that an ordinarily skilled artisan would have understood that "when Chaimberg's CCT switch is coupled to an additional electrical cable," the "CCT switch would necessarily include electrical coupling features configured to couple to the additional cable." Pet. 45 (citing Ex. 1004 ¶¶ 177–179).

Fourth, Petitioner asserts that "[p]lacing the second coupling feature adjacent to the first coupling feature would have been obvious to" an ordinarily skilled artisan and "a matter of mere routine design choice." Pet. 45–46 (citing Ex. 1004 ¶ 179).

Patent Owner makes no arguments specific to claim 17. *See, e.g.*, Resp. 43–48; Sur-reply 14–18. Nonetheless, the burden remains on Petitioner to demonstrate unpatentability. *See Dynamic Drinkware*, 800 F.3d at 1378.

Based on the evidence and Petitioner's arguments regarding claim 17, Petitioner has not shown that Chaimberg discloses or renders obvious claim 17's limitations. *See* Pet. 45–46; Ex. 1004 ¶¶ 177–179. Because claim 17 depends from claim 13, claim 17 requires a switch with:

> (1) "at least one first coupling feature . . . configured to electrically couple to an electrical cable of the luminaire"; and
>
> (2) "at least one second coupling feature . . . configured to electrically couple to an additional electrical cable of the luminaire."

Ex. 1001, 15:26–28, 16:17–20.

Petitioner fails to explain how Chaimberg teaches a switch with a second coupling feature "configured to electrically couple to an additional electrical cable of the luminaire" instead of existing house or building wiring. *See* Pet. 45–46; Ex. 1004 ¶¶ 177–179.

In its arguments regarding claim 17, Petitioner ignores the language "of the luminaire" in the phrase "an additional electrical cable of the luminaire." *See* Pet. 45–46; Ex. 1004 ¶¶ 177–179. Instead, Petitioner asserts that an ordinarily skilled artisan would have understood that "when Chaimberg's CCT switch is coupled to an additional electrical cable," the "CCT switch would necessarily include electrical coupling features configured to couple to the additional cable." Pet. 45; *see* Ex. 1004 ¶ 179. But Petitioner does not explain why Chaimberg's CCT switch would have been coupled to "an additional electrical cable of the luminaire." *See* Pet. 45–46; Ex. 1004 ¶¶ 177–179. Nor does Petitioner identify a reason to modify Chaimberg's LED light fixture to include a second cable, i.e., "an additional electrical cable of the luminaire," and then adapt Chaimberg's

CCT switch for that "additional electrical cable of the luminaire." *See* Pet. 45–46; Ex. 1004 ¶¶ 177–179.

In its arguments regarding claim 17, Petitioner references its arguments regarding claim 8. Pet. 45; *see* Ex. 1004 ¶ 178. As discussed above for claim 8, Petitioner maps claim 8's "additional electrical cable" to live wire 17 that enters driver housing 16 from outside the light fixture. Pet. 36; *see* Ex. 1003, Fig. 1; Ex. 1004 ¶ 132; *supra* § IV.F.6. Chaimberg discloses that live wire 17 supplies "line voltage" to driver circuit 20, thus indicating that live wire 17 constitutes existing house or building wiring. Ex. 1003, 3:23–25; Ex. 1031, 96:4–97:3; *see supra* § IV.F.6. Petitioner acknowledges that "house wiring is not a cable of the luminaire." Reply 17.

For these reasons, Petitioner has not shown that Chaimberg discloses or renders obvious claim 17's limitations. *See* Pet. 45–46; Ex. 1004 ¶¶ 177–179.

(c) <u>Claim 18</u>

Claim 18 depends directly from claim 13 and specifies that "the [switch] body is configured to be integrated with the electrical cable." Ex. 1001, 16:21–22.

Petitioner contends that Chaimberg discloses claim 18's limitation because Chaimberg's LED light fixture includes selector switch 18 that Chaimberg describes as "mounted" either "on" or "in" cable 15. Pet. 31, 46 (citing Ex. 1003, 3:49–53 (using the word "on"), code (57) (using the word "in"); Ex. 1004 ¶¶ 117–119, 181–182). Further, Petitioner asserts that an ordinarily skilled artisan "would have understood that the switch 18 is 'integrated with' the electrical cable because the switch controls the CCT output of Chaimberg's light fixture." *Id.* at 31 (citing Ex. 1004 ¶¶ 118–119).

Patent Owner makes no arguments specific to claim 18. *See, e.g.*, Resp. 43–48; Sur-reply 14–18.

For the reasons stated by Petitioner and supported by Dr. Eden's testimony, we agree with Petitioner that Chaimberg discloses claim 18's limitation. *See* Pet. 31–32, 46; Ex. 1004 ¶¶ 117–120, 181–183.

(d) Claim 19

Claim 19 depends directly from claim 13 and specifies that "the [switch] body is configured to be disposed within a junction box." Ex. 1001, 16:23–24.

Petitioner contends that Chaimberg discloses or renders obvious claim 19's limitation for the reasons Petitioner contends that Chaimberg discloses or renders obvious claim 7's limitations. Pet. 46; *see id.* at 33–35; Reply 10–11.

Patent Owner disputes that Chaimberg discloses or renders obvious claim 19's limitation for the reasons Patent Owner disputes that Chaimberg discloses or renders obvious claim 7's limitations. Resp. 48; *see id.* at 52–55; Sur-reply 24–25.

For the reasons discussed above for claim 7, we agree with Petitioner that Chaimberg renders claim 19's limitation obvious. *See* Pet. 33–35, 46; Reply 10–11; Ex. 1004 ¶¶ 72, 102, 121–130, 184–185; Ex. 1027 ¶¶ 6–7, 18–22; *supra* § IV.F.5(c).

12. CONCLUSION ABOUT PATENTABILITY FOR INDEPENDENT CLAIM 13 AND DEPENDENT CLAIMS 3, 6–9, 11, 12, 15, AND 17–19

For the reasons discussed above, Chaimberg teaches the inventions covered by claims 3, 6, 7, 9, 11, 12, 18, and 19. *See supra* §§ IV.F.3–IV.F.5, IV.F.7–IV.F.9, IV.F.11(c)–(d). Further, for the reasons discussed

above, assuming that some members of the Halo Commercial PR8 family of products are "coextensive (or nearly coextensive)" with these claims, we accord little weight to Patent Owner's evidence concerning objective indicia of nonobviousness. *See supra* § IV.F.2(g)(iii). Hence, Petitioner has shown by a preponderance of the evidence that claims 3, 6, 7, 9, 11, 12, 18, and 19 are unpatentable under § 103 because the claims would have been obvious over Chaimberg.

For the reasons discussed above, Petitioner has not shown the unpatentability of claims 8, 13, 15, and 17 based on Chaimberg. *See supra* §§ IV.F.6, IV.F.10, IV.F.11(b).

G. Alleged Obviousness over Chaimberg and Roberge: Claims 2, 4, 5, 10, 14, 16, and 20

Petitioner contends that claims 2, 4, 5, 10, 14, 16, and 20 are unpatentable under § 103 because the claims would have been obvious over Chaimberg and Roberge. *See* Pet. 15, 46–59; Reply 12–15. Patent Owner disputes Petitioner's contentions. *See* Resp. 55–63; Sur-reply 14–18, 25–26.

Above, we provided an overview of Chaimberg. *See supra* § IV.F.1. Below, we provide an overview of Roberge. Then, we consider the patentability issues. For the reasons explained below, we agree with Petitioner that claims 2, 4, 5, 10, 14, and 20 are unpatentable under § 103 because the claims would have been obvious over Chaimberg and Roberge but disagree that claim 16 is unpatentable under § 103 based on these references.

1. OVERVIEW OF ROBERGE (EXHIBIT 1011)

Roberge is a U.S. patent titled "Lighting Methods and Systems," filed on May 5, 2004, and issued on February 20, 2007. Ex. 1011, codes (12),

(22), (45), (54). Roberge discloses a wide variety of lighting "methods and systems" along with "a variety of methods and systems for light control," such as "central control facilities" and "control facilities that are local to lighting units." *Id.* at 1:28–31, 33:1–4, code (57); *see id.* at 24:63–64, 34:19–39:15.

A "control facility" may control "the intensity, color, saturation, color temperature, on-off state, brightness, or other feature of light that is produced." Ex. 1011, 4:45–47; *see id.* at 7:55–60, 43:2–3. A "control facility" may include a "simple" switch. *Id.* at 24:66–25:2.

Roberge discloses lighting fixtures with housings having various shapes, including "cylindrical, hemispherical, rectangular, square, or another suitable shape." Ex. 1011, 17:58–60; *see id.* at 15:56–60, 17:23–30, Fig. 9. The housing may be configured as:

> a spot light, a down light, an up light, a cove light, an alcove light, a sconce, a border light, a wall-washing fixture, an alcove light, an area light, a desk lamp, a chandelier, a ceiling fan light, a marker light, a theatrical light, a moving-head light, a pathway light, a cove light, a recessed light, a track light, a wall fixture, **a ceiling fixture**, a floor fixture, **a circular fixture**, a spherical fixture, a square fixture, a rectangular fixture, an accent light, a pendant, a parabolic fixture, a strip light, a soffit light, a valence light, a floodlight, an indirect lighting fixture, a direct lighting fixture, a flood light, a cable light, a swag light, a picture light, a portable luminaire, an island light, a torchiere, a boundary light, a flushor any other kind [of] architectural or theatrical lighting fixture or luminaire.

Id. at 18:1–14 (emphasis added).

Roberge also discloses various configurations of light sources or LEDs with "two white sources of varying characteristics, three white sources of varying characteristics, or four or more white sources of varying

characteristics." Ex. 1011, 7:18–36, Fig. 3. The characteristics include "wavelength, intensity, power, quality, light output, efficiency, [and] efficacy." *Id.* at 7:23–26; *see id.* at 35:17–22. Multiple light sources may combine "to produce a mixed colored light (including essentially white light having a variety of color temperatures)." *Id.* at 7:41–46; *see id.* at 33:29–33.

Roberge's Figure 71 (reproduced below) depicts a linear lighting system:

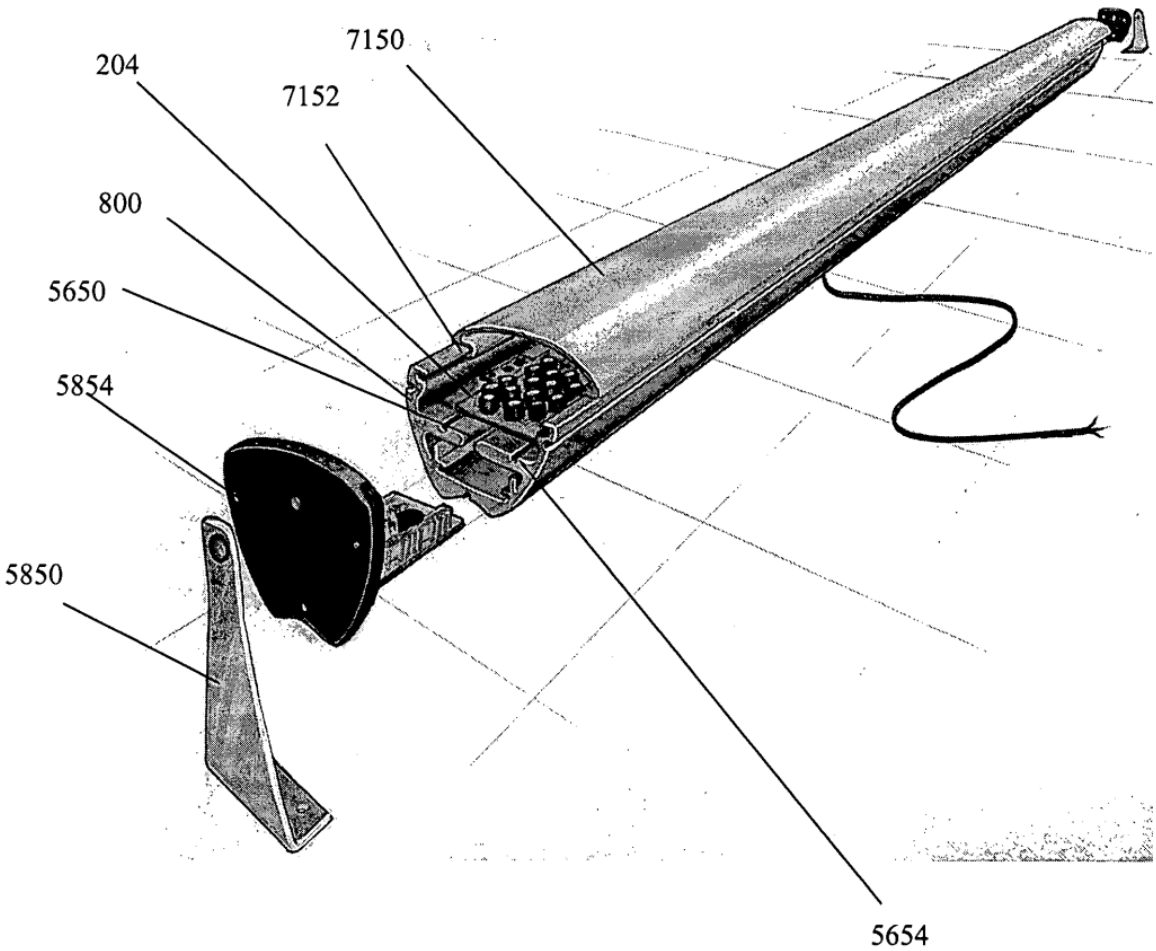

Fig. 71

Figure 71 illustrates a linear lighting system with the following components:

- circuit board 204 including multiple LEDs mounted on the circuit board;
- lens cover 7150;

- housing 800;
- mounting bracket 5850 for housing 800; and
- end plate 5854.

Ex. 1011, 4:34, 5:8–12, 66:43–52, Fig. 71.

Roberge's Figure 34 shows "simple user interfaces" that may "trigger control signals." Ex. 1011, 42:11–12, Fig. 34. For example, Roberge's Figure 34i (reproduced below) depicts a rotary switch for selecting one or more color temperatures from a scale having eleven discrete values:

Fig. 34i

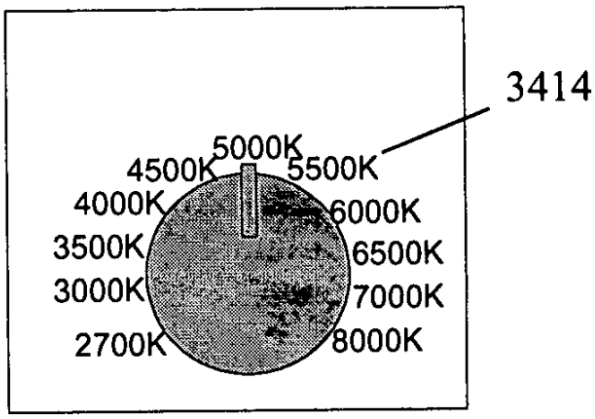

Figure 34i illustrates scale 3414 of color temperatures from 2700 K to 8000 K arranged around a rotary dial that allows a user to select any of the following discrete color temperatures: 2700 K, 3000 K, 3500 K, 4000 K, 4500 K, 5000 K, 5500 K, 6000 K, 6500 K, 7000 K, and 8000 K. *Id.* at 42:51–54, Fig. 34i.

With the Figure 34i rotary switch, a "lighting designer can specify use of a particular color temperature of light, which the installer can select by setting the right position on the scale 3414 with the dial." Ex. 1011, 42:54–57, Fig. 34i. Alternatively, a "slide mechanism can be used like the dial to set a particular color temperature of white light, or to select a particular color of non-white light, in either case on a scale." *Id.*

at 42:57–60. Additionally, the "slides, switches, dials, dipswitches and the like can be used to control a wide range of variables, such as color, color temperature, intensity, [and] hue." *Id.* at 42:35–38; *see id.* at 5:27–33.

Roberge explains that providing adjustable lighting "offers designers and installers much greater control over the correct maintenance of the lighting of the environment." Ex. 1011, 42:62–65.

2. Whether an Ordinarily Skilled Artisan Would Have Been Motivated to Combine the Teachings of the References with a Reasonable Expectation of Success

(a) Motivation to Combine: Petitioner's Position

Petitioner contends that an ordinarily skilled artisan would have been motivated to combine Roberge's teachings with Chaimberg's teachings and use Roberge's Figure 34i rotary switch with Chaimberg's illustrative embodiment. *See* Pet. 49–52, 54–55; Reply 12–14. In particular, Petitioner acknowledges that Chaimberg's illustrative embodiment includes "just two sets of LEDs" and selector switch 18 provided with slide button 31 "displaceable to three switch positions" corresponding to three discrete CCTs, i.e., 3000 K, 4000 K, and 5000 K. Pet. 50, 54 (citing Ex. 1003, 1:9–11, 4:30–5:10; Ex. 1004 ¶ 188). But Petitioner asserts that Chaimberg "repeatedly describes its LED light fixture as including two or more sets of LEDs of different CCTs." Reply 12–13 (emphasis omitted) (citing Ex. 1003, 1:7–14, 2:29–32, 2:38–45, 5:16–39, code (57)); *see* Pet. 50 (quoting Ex. 1003, code (57)).

Petitioner asserts that selector switch 18 would require "additional positions" if additional sets of LEDs were included in a luminaire according to Chaimberg's disclosures. Pet. 50 (citing Ex. 1004 ¶¶ 188–189); *see id.* at 54 (citing Ex. 1004 ¶ 205). Petitioner also asserts that an ordinarily

skilled artisan (1) "would have looked to other CCT switches disclosed in the art for CCT switches with more than three positions" and (2) would have understood that "both slide and rotary switches offer multiple positions." *Id.* at 50–51 (citing Ex. 1004 ¶ 189).

Further, Petitioner asserts that "Chaimberg and Roberge both relate to ceiling mountable LED lighting systems with adjustable white light CCT outputs." Pet. 52; *see id.* at 55. Petitioner asserts that the "similarities between Chaimberg and Roberge" support the combination. Reply 12 (citing Ex. 1031, 29:6–30:15, 81:17–82:1).

Additionally, Petitioner contends that Roberge discloses:

(1) LED lighting systems, such as lamps and cylindrical light fixtures like Chaimberg's ceiling-mountable LED light fixture;

(2) LEDs providing "two white sources of varying characteristics, three white sources of varying characteristics, or four or more white sources of varying characteristics";

(3) "light generated by two or more of the light sources combines to produce a mixed color light (including essentially white light having a variety of color temperatures)";

(4) a dial that "allows a user to select one or more color temperatures from a scale," including "different color temperatures of white light"; and

(5) a slide mechanism that "can be used like the dial to set a particular color temperature of white light."

Pet. 51 (quoting Ex. 1011, 7:33–36, 7:40–46, 42:51–54, 42:57–59) (citing Ex. 1011, 1:28–31, 17:23–26, Fig. 43i); *see* Reply 12 (citing Ex. 1031, 86:20–88:7).

Petitioner asserts that an ordinarily skilled artisan would have recognized that including "additional CCT outputs" according to Chaimberg's disclosures "would advantageously provide more configurability and flexibility (e.g., usability in a larger range of settings)." Pet. 52 (emphasis omitted) (citing Ex. 1004 ¶ 189); *see* Reply 12–13 (citing Ex. 1003, 1:7–14, 2:29–32, 2:38–45, 5:16–39, code (57)). Petitioner asserts that an ordinarily skilled artisan would have been motivated to use Roberge's Figure 34i rotary switch and the corresponding color temperatures in "an implementation of Chaimberg having more than two sets of LEDs because he/she would recognize that it would provide a simple and effective means" for selecting from among different available CCT values. Pet. 52.

(b) Motivation to Combine: Patent Owner's Position

Patent Owner contends that Chaimberg's disclosure of "at least two sets of LED's" concerns "the number of LEDs necessary to carry out Chaimberg's disclosed design" for "selectively energizing two sets of LEDs." Resp. 57 (citing Ex. 1003, 4:30–5:10, Fig. 3; Ex. 2031 ¶¶ 184–186). Patent Owner also contends that "Chaimberg never mentions, much less suggest[s], the inclusion of CCT settings beyond the three expressly disclosed therein, and never describes additional CCT settings that could be achieved (e.g., through use of an undisclosed third set of LEDs or otherwise)." *Id.* (citing Ex. 2031 ¶ 185); *see id.* at 59–60; Sur-reply 17.

According to Patent Owner, Petitioner "jumps" from Chaimberg's disclosure of "at least two sets of LED's" to including "additional positions" and "using a different CCT switch entirely (for claims 2, 10, 14 and 20), with no real explanations for combinations or modifications." Resp. 57

(citing Ex. 2031 ¶ 185). In Patent Owner's view, Petitioner relies on "pure hindsight." *Id.*; *see id.* at 59, 61–62; Sur-reply 26.

Further, Patent Owner asserts that there are "significant differences between the concepts disclosed in Chaimberg and Roberge." Resp. 58 (citing Ex. 2031 ¶¶ 187–193); *see id.* at 60–61. Patent Owner explains that:

> (1) Roberge's Figure 34i rotary switch is (a) "not described as being part of a luminaire" and (b) "intended to set a specific CCT value for a device" and not "remain part of the luminaire or otherwise accessible for further configuration after device installation"; and
>
> (2) Chaimberg's ceiling-mountable LED light fixture is "directed to addressing the problem where 'the end user desires to later change the color,' which requires continued user access."

Id. at 58 (quoting Ex. 1003, 2:10) (citing Ex. 1003, 2:8–13; Ex. 1011, 42:39–50, 42:60–65; Ex. 2031 ¶¶ 190–192); *see* Sur-reply 25–26.

Patent Owner asserts that Petitioner fails to address "these significant differences." Resp. 58–59. Patent Owner also asserts that Petitioner fails to explain:

> (1) why an ordinarily skilled artisan would have looked to "an independent interface for permanent pre-set CCT selection when considering Chaimberg's device-located switch"; and
>
> (2) how an ordinarily skilled artisan would have modified Chaimberg to couple Roberge's Figure 34i rotary switch with "some undisclosed arrangement of additional sets of LEDs, particularly when that embodiment of Roberge is not a device-located switch (coupled to a cable of the luminaire or otherwise), and is not intended for user access and selection of CCT settings."

Id. at 58–60 (emphasis omitted) (citing Ex. 2031 ¶¶ 192–193, 199–202); *see* Sur-reply 26.

(c) Motivation to Combine: Analysis

For the reasons explained below, we agree with Petitioner that an ordinarily skilled artisan would have been motivated to combine Roberge's teachings with Chaimberg's teachings in the way Petitioner proposes. *See* Pet. 49–52, 54–55; Reply 12–14; Ex. 1004 ¶¶ 187–199, 205, 215; Ex. 1027 ¶¶ 40–52.

First, Chaimberg discloses ceiling-mountable LED light fixtures with "at least two sets of LED's of different correlated color temperatures" (CCTs). Ex. 1003, 1:8–11, 2:24–26, 2:30–33, 2:38–45, 5:16–39 (claim 1), code (57); *see* Ex. 1004 ¶¶ 70, 110, 150, 158, 170, 188, 204; Ex. 1027 ¶ 41. As shown in Chaimberg's Figure 1, Chaimberg's illustrative embodiment includes only two sets of different color LEDs 11 and selector switch 18 with slide button 31 "displaceable to three switch positions" to provide three discrete CCTs, i.e., 3000 K, 4000 K, and 5000 K. Ex. 1003, 2:51–57, 2:66–3:2, 3:18–21, 3:49–54, 4:34–5:10, 5:49–6:4 (claim 3), code (57), Fig. 1; *see* Ex. 1004 ¶¶ 110, 114, 150, 154, 158, 170, 188; Ex. 1027 ¶ 91. Consistent with Chaimberg's disclosures about using "at least two sets of LED's," however, Chaimberg explains that "other combinations of color LED's can be incorporated in the LED light fixture housing 12 depending on the color characteristics that one desires to be produced by the LED light fixture." Ex. 1003, 3:9–12.

As for Patent Owner's contention that "Chaimberg never mentions, much less suggest[s], the inclusion of CCT settings beyond the three expressly disclosed therein," the "expansive and flexible" obviousness

analysis "need not seek out" the "precise" disclosure of a specific feature in a challenged claim because the analysis "can take account of the inferences and creative steps that a person of ordinary skill in the art would employ." *See KSR*, 550 U.S. at 415, 418; Resp. 57. Based on Chaimberg's disclosures about using "at least two sets of LED's," a person of ordinary skill would have reasonably inferred that a luminaire with more than two sets of LEDs would allow for more than three CCTs. *See* Ex. 1003, 1:8–11, 2:24–26, 2:30–33, 2:38–45, 3:9–12, 5:16–39 (claim 1), code (57); Ex. 1004 ¶¶ 70, 110, 150, 158, 170, 188, 204; Ex. 1027 ¶ 41.

For example, a luminaire with LED set A, LED set B, and LED set C could allow for five CCTs as follows:

(1) the CCT resulting from LED set A alone;

(2) the CCT resulting from LED set B alone;

(3) the CCT resulting from LED set C alone;

(4) the CCT resulting from LED sets A and B together; and

(5) the CCT resulting from LED sets B and C together.

See Ex. 1004 ¶ 215.

Second, an ordinarily skilled artisan "would have recognized the advantages of introducing additional CCT values to those available with a luminaire" according to Chaimberg's illustrative embodiment, e.g., "a greater range in luminaire light CCT values" offering greater flexibility and expanded capability. Ex. 1004 ¶¶ 197, 199; Ex. 1027 ¶¶ 43–44; *see* Ex. 1004 ¶ 220; Ex. 1027 ¶ 42. For instance, the skilled artisan "would have recognized the advantages of including additional LEDs having CCT values of 3500 K and 2700 K because these are of particular value for residential and restaurant lighting." Ex. 1027 ¶ 42; *see* Ex. 1004 ¶ 220.

More specifically, in the lighting industry "warm" lighting, i.e., CCT values below approximately 3500 K, is "highly valued by customers." Ex. 1004 ¶ 220; Ex. 1027 ¶ 42. For instance, "2700 K is a common CCT for traditional incandescent bulbs that consumers would have been familiar with." Ex. 1004 ¶ 220; Ex. 1027 ¶ 42; *see* Ex. 1001, 1:36–38; Ex. 1011, 10:23–25. Also, a 2009 patent application publication that names Dr. Krames as a co-inventor explains that a "color temperature of between 2700-3000K is considered the most pleasing for living spaces since it is the most flattering for skin tones and clothing." Ex. 1033 ¶ 6.

Third, an ordinarily skilled artisan would have understood that Chaimberg's selector switch 18 would require "additional positions" if additional sets of LEDs were included in a luminaire according to Chaimberg's disclosures. *See* Ex. 1004 ¶¶ 188–189, 205, 215.

Fourth, an ordinarily skilled artisan (1) would have looked to other CCT switches disclosed in the art for CCT switches with more than three positions and (2) would have understood that "[b]oth slide and rotary switches will readily accommodate five switch positions or more." *See* Ex. 1004 ¶¶ 189, 197, 205, 210; Ex. 1027 ¶ 49.

Fifth, Roberge discloses LED lighting systems, such as lamps and cylindrical light fixtures, where LEDs "produce different colors or wavelengths," including "two white sources of varying characteristics, three white sources of varying characteristics, or four or more white sources of varying characteristics." Ex. 1011, 7:6–8, 7:31–36, 17:23–26, Fig. 3; *see* Ex. 1004 ¶¶ 75, 190, 208. Roberge also discloses that "slides, switches, dials, dipswitches and the like can be used to control a wide range of variables, such as color, color temperature, intensity, [and] hue." Ex. 1011,

42:35–38; *see id.* at 5:27–33; Ex. 1004 ¶¶ 195–196; Ex. 1027 ¶ 49. For example, Roberge's Figure 34i depicts a rotary switch for selecting one or more color temperatures from a scale having eleven discrete values. Ex. 1011, 42:51–54, Fig. 34i; *see* Ex. 1004 ¶¶ 42, 76, 194, 197, 201, 209, 217, 223; Ex. 1027 ¶ 50.

Sixth, an ordinarily skilled artisan "would have understood that the additional CCT values available with Roberge's rotary switch would expand the capability of Chaimberg's slide switch, thereby enabling Chaimberg to produce white light having CCT values beyond those discussed in the specification (3000 K, 4000 K, and 5000 K)." Ex. 1004 ¶ 197; Ex. 1027 ¶ 44; *see* Ex. 1004 ¶¶ 189, 199. The skilled artisan would also have understood that Roberge's rotary switch provides a "simple and effective means" for selecting from among different available CCT values. Ex. 1027 ¶ 45.

Seventh, we disagree with Patent Owner that Roberge's rotary switch is "intended to set a specific CCT value for a device" and not "remain part of the luminaire or otherwise accessible for further configuration after device installation." *See* Resp. 58. Roberge discusses the desirability of sometimes "limit[ing] user control." Ex. 1011, 42:39–40, 43:35–36; *see* Ex. 1027 ¶ 45. But Roberge also discusses the desirability of providing "facilities for improving the designer's control over future lighting of an environment," e.g., to change the color temperature if "the environment changes over time" to "reflect a new look for the environment." Ex. 1011, 42:46–50, 43:15–18, 43:20–23.

Roberge does not describe any of the Figure 34 interfaces as restricted to embodiments allowing only "limit[ed] user control." *See* Ex. 1011,

42:11–65; Ex. 1027 ¶ 45. Instead, Roberge explains that providing adjustable lighting, e.g., by using any of the Figure 34 interfaces, "offers designers and installers much greater control over the correct maintenance of the lighting of the environment," i.e., "maintenance of the lighting of the environment" after device installation. Ex. 1011, 42:62–65, Fig. 34. Additionally, because Roberge does not describe any of the Figure 34 interfaces as restricted to embodiments allowing only "limit[ed] user control," Patent Owner mischaracterizes the Figure 34i rotary switch by calling it "an independent interface for permanent pre-set CCT selection." *See* Resp. 59; Ex. 1011, 42:11–65; Ex. 1027 ¶ 45.

Eighth, Patent Owner's assertion that Petitioner fails to explain how an ordinarily skilled artisan would have modified Chaimberg to couple the Figure 34i rotary switch with "some undisclosed arrangement of additional sets of LEDs" does not refute Petitioner's evidence. *See* Resp. 60; Sur-reply 26; Ex. 1004 ¶¶ 187–199, 205, 215; Ex. 1027 ¶¶ 40–52. For instance, Dr. Eden testifies that modifying Chaimberg's illustrative embodiment to include a selector switch with "additional positions" would have been "straightforward" because "[b]oth slide and rotary switches will readily accommodate five switch positions or more." Ex. 1004 ¶¶ 205, 215; Ex. 1027 ¶ 49; *see* Ex. 1004 ¶ 189; Ex. 1027 ¶ 47. We credit Dr. Eden's testimony. Moreover, the "rationale of *KSR* does not support [the] theory that a person of ordinary skill can only perform combinations of a puzzle element A with a perfectly fitting puzzle element B." *ClassCo*, 838 F.3d at 1219.

Ninth, we disagree with Patent Owner that Petitioner relies on hindsight for the proposed combination. *See* Resp. 57, 59, 61–62;

Sur-reply 26. An explicit analysis "whether there was an apparent reason to combine" the teachings of the references reduces "the risk of . . . falling prey to hindsight bias." *See KSR*, 550 U.S. at 418, 421. Here, Petitioner and Dr. Eden provide an explicit analysis why an ordinarily skilled artisan would have been motivated to combine Roberge's teachings with Chaimberg's teachings in the way Petitioner proposes, i.e., to obtain the following benefits:

(1) "more configurability and flexibility (e.g., usability in a larger range of settings)"; and

(2) "a greater range in luminaire light CCT values" offering greater flexibility and expanded capability.

See Pet. 52; Ex. 1004 ¶¶ 197, 199; Ex. 1027 ¶¶ 43–44.

(d) <u>Reasonable Expectation of Success: Petitioner's Position</u>

Petitioner contends that "[a] party does not need to use the phrase 'reasonable expectation of success,' 'likelihood of success,' or some other set of magic words, to establish a reasonable expectation of success" because the analysis "can be implicit." Reply 14 (alteration by Petitioner) (quoting *Juniper Networks, Inc. v. Correct Transmission, LLC*, 2024 WL 3517862, at *4 (Fed. Cir. July 24, 2024); *Elekta Ltd. v. ZAP Surgical Sys., Inc.*, 81 F.4th 1368, 1376 (Fed. Cir. 2023)). Further, Petitioner asserts that (1) the "similarity and compatibility of Chaimberg and Roberge," (2) the "proposed modification's trivial nature," and (3) the "intertwined" arguments about motivation to combine establish that the "proposed combination is a routine engineering task with a reasonable expectation of success." *Id.* (citing Pet. 49–52; Ex. 1004 ¶¶ 128, 187–199; *Elekta*, 81 F.4th at 1376).

For the reasons explained above, we determine that Petitioner has established that an ordinarily skilled artisan would have been motivated to combine Roberge's teachings with Chaimberg's teachings in the manner described.

(e) Reasonable Expectation of Success: Patent Owner's Position

Patent Owner contends that Petitioner fails to show why an ordinarily skilled artisan "would have had a reasonable expectation of success in carrying out any proposed combination of Chaimberg and Roberge." Resp. 56. Further, Patent Owner asserts that "the words 'expectation' or 'success' appear nowhere in the Petition or supporting declaration." *Id.*

(f) Reasonable Expectation of Success: Analysis

We agree with Petitioner that an ordinarily skilled artisan would have had a reasonable expectation of success in combining Roberge's teachings with Chaimberg's teachings. *See* Reply 14; Ex. 1004 ¶¶ 189, 205, 215; Ex. 1027 ¶¶ 47, 49. A "[r]easonable expectation of success refers to the likelihood of success in combining references to meet the limitations of the claimed invention." *Elekta*, 81 F.4th at 1375–76 (citing *Intelligent Bio-Sys., Inc. v. Illumina Cambridge Ltd.*, 821 F.3d 1359, 1367 (Fed. Cir. 2016)). "Unlike a motivation to combine determination, which requires an explicit analysis, a finding of reasonable expectation of success can be implicit." *Id.* at 1376 (citing *KSR*, 550 U.S. at 418; *Merck & Cie v. Gnosis S.P.A.*, 808 F.3d 829, 836 (Fed. Cir. 2015)).

Here, both Chaimberg and Roberge disclose LED light fixtures with selector switches that permit changing a device's CCT after device installation. *See* Ex. 1003, 2:16–45, 2:66–3:13, 3:49–54, 4:30–5:10, code (57), Figs. 1–3; Ex. 1004 ¶¶ 187–188, 190, 195–196, 208; Ex. 1011,

4:45–47, 7:18–36, 7:55–60, 17:23–26, 18:1–14, 35:17–22, 42:11–65, 43:15–18, 43:20–23, Fig. 34.

Further, Roberge recognizes the functional equivalence of slide switches and rotary switches. Ex. 1011, 42:51–54, 42:57–60; *see* Ex. 1004 ¶¶ 76–77, 197, 210. Specifically, referencing Figure 34i's rotary switch, Roberge explains that (1) a "dial allows a user to select one or more colors or color temperatures from a scale 3414" and (2) a "slide mechanism can be used like the dial to set a particular color temperature of white light, or to select a particular color of non-white light, in either case on a scale." Ex. 1011, 42:51–54, 42:57–60.

Additionally, Dr. Eden testifies that modifying Chaimberg's illustrative embodiment to include a selector switch with "additional positions" would have been "straightforward" because "[b]oth slide and rotary switches will readily accommodate five switch positions or more." Ex. 1004 ¶¶ 205, 215; Ex. 1027 ¶ 49; *see* Ex. 1004 ¶ 189; Ex. 1027 ¶ 47. We credit Dr. Eden's testimony.

For the reasons explained above, we determine that Petitioner has established that an ordinarily skilled artisan would have had a reasonable expectation of success in combining Roberge's teachings with Chaimberg's teachings in the manner described.

3. CLAIMS 2, 10, AND 20

Claim 2 depends directly from claim 1 and specifies that "the switch is a dial." Ex. 1001, 14:46. Claim 10 depends directly from claim 1 and specifies that "the switch is a rotary switch." *Id.* at 15:14–15. Claim 20 depends directly from claim 13 and specifies that "the switch is a rotary switch." *Id.* at 16:25–26.

Petitioner contends that Roberge discloses a "dial" according to claim 2 and a "rotary switch" according to claims 10 and 20 because Roberge's Figure 34i depicts a "rotary switch" or "dial" for selecting one or more color temperatures from a scale having eleven discrete values. Pet. 53, 57–59 (citing Ex. 1004 ¶¶ 36–38, 200–202, 222–224, 232–234; Ex. 1011, 42:51–54, Fig. 34i).

Patent Owner makes no arguments specific to claims 2, 10, and 20. *See, e.g.*, Resp. 55–63; Sur-reply 14–18, 25–26.

For the reasons stated by Petitioner and supported by Dr. Eden's testimony, we agree with Petitioner that Roberge discloses the limitations in claims 2, 10, and 20. *See* Pet. 53, 57–59; Ex. 1004 ¶¶ 36–38, 200–202, 222–224, 232–234.

4. CLAIMS 4 AND 5

Claims 4 and 5 read as follows (with formatting added for clarity):

> 4. The luminaire of claim 3, wherein the plurality of positions of the switch comprises a first position, a second position, a third position, a fourth position, and a fifth position.
>
> 5. The luminaire of claim 4,
>
> wherein the first position of the switch corresponds to 2700 Kelvin (K) output by the one or more light sources,
>
> wherein the second position of the switch corresponds to 3000 K output by the one or more light sources,
>
> wherein the third position of the switch corresponds to 3500 K output by the one or more light sources,
>
> wherein the fourth position of the switch corresponds to 4000 K output by the one or more light sources, and
>
> wherein the fifth position of the switch corresponds to 5000 K output by the one or more light sources.

Ex. 1001, 14:49–62.

(a) Petitioner's Contentions

Petitioner contends that Roberge discloses the limitations in claims 4 and 5 because Roberge's Figure 34i depicts a "rotary switch" or "dial" for selecting one or more color temperatures from a scale having eleven discrete values including the five discrete values recited in claim 5. *See* Pet. 55–57; Reply 14–15. As support, Petitioner provides the following annotated version of Figure 34i:

Fig. 34i

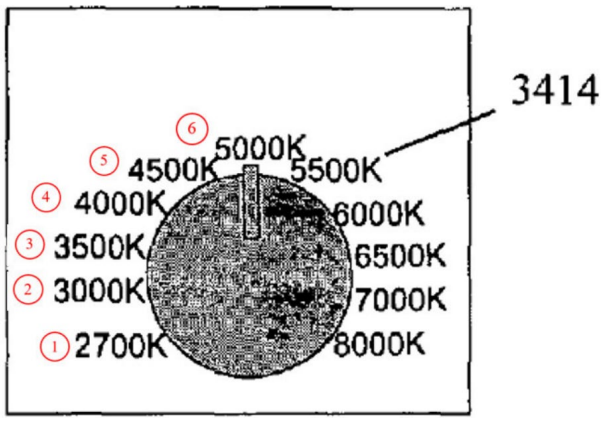

Figure 34i illustrates scale 3414 of color temperatures from 2700 K to 8000 K arranged around a rotary dial that allows a user to select any of the following discrete color temperatures: 2700 K, 3000 K, 3500 K, 4000 K, 4500 K, 5000 K, 5500 K, 6000 K, 6500 K, 7000 K, and 8000 K. Ex. 1011, 42:51–54, Fig. 34i. The above annotated version of Figure 34i includes:

(1) the number "1" in red identifying a first switch position corresponding to a 2700 K output;

(2) the number "2" in red identifying a second switch position corresponding to a 3000 K output;

(3) the number "3" in red identifying a third switch position corresponding to a 3500 K output;

(4) the number "4" in red identifying a fourth switch position corresponding to a 4000 K output;

(5) the number "5" in red identifying a fifth switch position corresponding to a 4500 K output; and

(6) the number "6" in red identifying a sixth switch position corresponding to a 5000 K output.

See Pet. 57; Ex. 1004 ¶ 217.

(b) Patent Owner's Contentions

For claim 4, Patent Owner contends that Petitioner fails to explain how an ordinarily skilled artisan would have modified Chaimberg to couple Roberge's Figure 34i rotary switch with "some undisclosed arrangement of additional sets of LEDs." Resp. 60 (citing Ex. 2031 ¶¶ 199–202).

For claim 5, Patent Owner contends that Roberge does not disclose the five recited CCT values in five switch positions and that Petitioner relies on hindsight to "generate the requirements of claim 5." Resp. 62 (citing Ex. 2030, 236:2–19; Ex. 2031 ¶¶ 205–207).

(c) Analysis

We agree with Petitioner that Roberge discloses the limitations in claims 4 and 5. *See* Pet. 55–57; Reply 14–15; Ex. 1004 ¶¶ 203–221; Ex. 1027 ¶¶ 48–52. Roberge's Figure 34i rotary switch includes five switch positions corresponding to the five recited CCT values. Ex. 1011, 42:51–54, Fig. 34i; *see* Ex. 1004 ¶¶ 76, 209, 217–219; Ex. 1027 ¶¶ 50–52.

For claims 4 and 5, Patent Owner's patentability arguments lack merit. *See* Resp. 59–62; Sur-reply 25–26. Claims 4 and 5 depend indirectly from claim 1. Ex. 1001, 14:47–62. Claim 1 uses the transitional term "comprising." *Id.* at 14:31. Because claim 1 uses the transitional term "comprising," claim 1 and its dependent claims do not exclude "unrecited elements," such as more than five switch positions. *See Regeneron Pharms., Inc. v. Merus N.V.*, 864 F.3d 1343, 1352 (Fed. Cir. 2017). Hence, Roberge's

disclosure of a rotary switch with eleven switch positions corresponding to eleven CCT values does not thwart an obviousness determination.

The analysis above about motivation to combine Roberge's teachings with Chaimberg's teachings addresses Patent Owner's assertion that Petitioner fails to explain how an ordinarily skilled artisan would have modified Chaimberg to couple Roberge's Figure 34i rotary switch with "some undisclosed arrangement of additional sets of LEDs." *See* Resp. 60; Sur-reply 26; *supra* § IV.G.2(c). That analysis also addresses Patent Owner's assertions concerning hindsight. *See* Resp. 57, 59, 61–62; Sur-reply 26; *supra* § IV.G.2(c).

5. CLAIM 14

Claim 14 depends directly from claim 13 and specifies that "each [switch] position is continuous within the range of positions." Ex. 1001, 16:6–7.

Petitioner contends that "it would have been obvious for" an ordinarily skilled artisan to modify Roberge's Figure 34i rotary switch to implement "continuous positions based on the potential user setting." Pet. 58 (citing Ex. 1004 ¶ 227). According to Petitioner, an ordinarily skilled artisan "would have understood that use of a continuous switch would have been useful in a home setting, where several users may want to select custom CCTs versus the standard pre-set temperatures." *Id.* (citing Ex. 1004 ¶ 227). Additionally, Petitioner explains that using "a potentiometer in the switch to enable a continuous selection of temperature outputs" would have been "a routine design choice." *Id.* (citing Ex. 1004 ¶ 227).

Patent Owner makes no arguments specific to claim 14. *See, e.g.*, Resp. 55–63; Sur-reply 14–18, 25–26.

For the reasons stated by Petitioner and supported by Dr. Eden's testimony, we agree with Petitioner that Roberge renders claim 14's limitation obvious. *See* Pet. 58–59; Ex. 1004 ¶¶ 225–228.

6. CLAIM 16

For the reasons discussed above, a preponderance of the evidence establishes February 19, 2016, as claim 16's effective filing date. *See supra* §§ IV.E.4(c), IV.E.5–IV.E.6. That effective filing date precedes Chaimberg's April 27, 2018, filing date, thus disqualifying Chaimberg as prior art for claim 16. *See* Ex. 1003, code (22); 35 U.S.C. § 102(a)(2). Because Chaimberg does not qualify as prior art for claim 16 and Petitioner relies on both Chaimberg and Roberge to show unpatentability under § 103, Petitioner has not shown unpatentability under § 103 based on Chaimberg and Roberge.

7. ALLEGED OBJECTIVE INDICIA OF NONOBVIOUSNESS

Above, we discussed Patent Owner's evidence and arguments regarding industry praise. *See supra* § IV.F.2(g)(ii). For the reasons discussed above, we see no reason to accord any weight to the ADEX award when considering whether a claimed invention would have been obvious. *See* Resp. 3–9; Ex. 2031 ¶¶ 58–71; Ex. 2041; *supra* § IV.F.2(g)(iii).

Also, assuming that some members of the Halo Commercial PR8 family of products are "coextensive (or nearly coextensive)" with the challenged dependent claims, we accord little weight to the Home Depot evidence for the reasons discussed above. *See supra* § IV.F.2(g)(iii). But even if that evidence carried more weight, it would not outweigh the other

evidence considered in the *Graham* analysis. *See Leapfrog*, 485 F.3d 1157 at 1162.

8. SUMMARY FOR CLAIMS 2, 4, 5, 10, 14, 16, AND 20

For the reasons discussed above, Roberge discloses the limitations in claims 2, 4, 5, 10, and 20, Roberge renders claim 14's limitation obvious, and Chaimberg teaches the inventions covered by the respective base claims, i.e., claims 1 and 13. *See supra* §§ IV.F.2, IV.F.11(a), IV.G.3–IV.G.5. Moreover, an ordinarily skilled artisan would have been motivated to combine Roberge's teachings with Chaimberg's teachings in the way Petitioner proposes and would have had a reasonable expectation of success. *See supra* §§ IV.G.2(c), IV.G.2(f). Also, we accord little weight to Patent Owner's evidence concerning objective indicia of nonobviousness. *See supra* §§ IV.F.2(g)(iii), IV.G.7. Hence, Petitioner has shown by a preponderance of the evidence that claims 2, 4, 5, 10, 14, and 20 are unpatentable under § 103 because the claims would have been obvious over Chaimberg and Roberge.

For the reasons discussed above, Petitioner has not shown by a preponderance of the evidence that claim 16 is unpatentable under § 103 based on Chaimberg and Roberge. *See supra* § IV.G.6.

H. Alleged Anticipation by or Obviousness over Reiff: Claims 13 and 15

Petitioner contends that claims 13 and 15 are unpatentable under § 102 as anticipated by Reiff or § 103 as obvious over Reiff. *See* Pet. 15, 82–89; Reply 27–33. Patent Owner disputes Petitioner's contentions. *See* Resp. 31–43; Sur-reply 8–14.

Below, we provide an overview of Reiff. Then, we consider the patentability issues. For the reasons explained below, we agree with Petitioner that claims 13 and 15 are unpatentable under § 103 because the claims would have been obvious over Reiff.

1. OVERVIEW OF REIFF (EXHIBIT 1013)

Reiff is a U.S. patent titled "Light Fixture," filed on July 12, 2004, and issued on March 20, 2007. Ex. 1013, codes (12), (22), (45), (54). Reiff states that the invention "relates to lighting having multiple sources of light particularly useful for specialized industrial or military applications" where "the color of light emitted can be changed by an in line switch." *Id.* at 1:6–10, 1:53–55; *see id.* at 2:17–22, 3:7–11, code (57). Reiff explains that the lighting "includes fluorescent and/or LED light sources" that are "dimmable" and "may provide white light or specialized light including red or blue 'invisible' light required in some military applications or UV lighting." *Id.* at code (57).

Reiff identifies various advantages of the invention, including that (1) "the light may be provided with both a conventional white light source and a specialized light source such as red, blue, or UV lights," and (2) "the light is easily operable between the multiple light sources and is dimmable." Ex. 1013, 2:23–28; *see id.* at 2:11–16, 2:29–33, 3:13–15.

Reiff's Figure 2 (reproduced below) depicts an example light fixture:

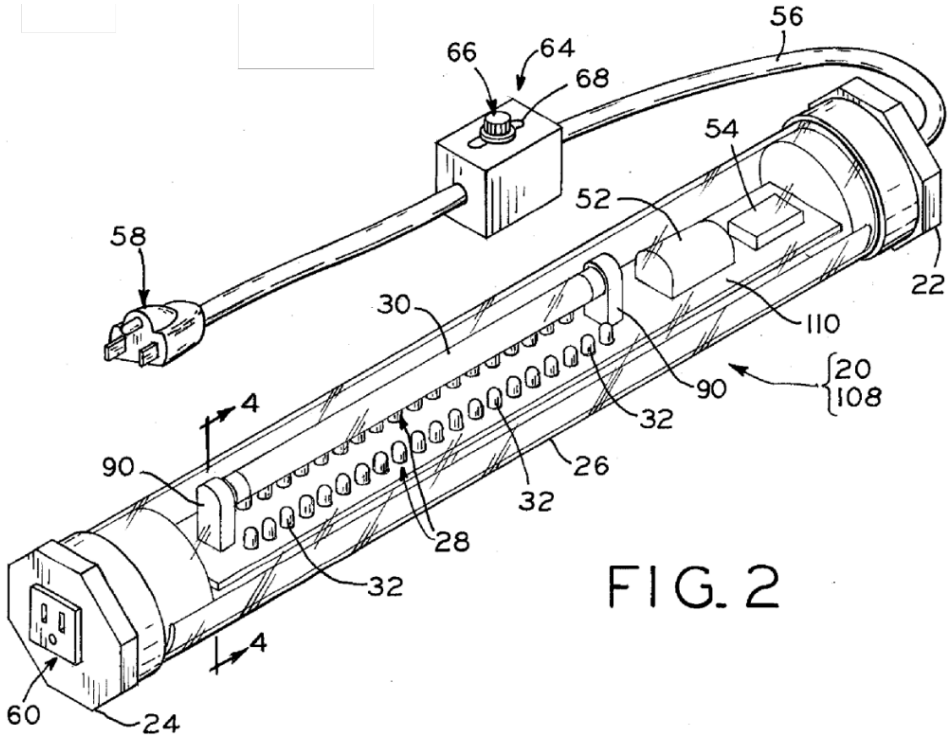

Figure 2 illustrates a light fixture (identified as light 20 and light 108) with the following components:[13]

- "transparent cylindrical housing 26 closed at both ends by end caps 22 and 24";
- "two light sources 28," i.e., fluorescent lamp 30 and LEDs 32;
- "conventional fluorescent ballast 52" located "in housing 26 near end cap 22" and "electrically connected to fluorescent lamp 30 to regulate current entering the lamp";

[13] Reiff uses the nomenclature "light 20" to identify the light fixture in Figures 1, 2, 5, and 7 and "light 108" to identify the light fixture in Figures 2 and 4. Ex. 1013, 3:20–22, 5:62–66. Otherwise, "[c]orresponding reference characters indicate corresponding parts throughout the several views." *Id.* at 2:64–65.

- "LED driver 54 for regulating the input current prior to illuminating LEDs 32";
- "electrical cord 56 extending from end cap 22" and "having plug 58 at a distal end of the cord for insertion into a conventional electrical outlet" to receive "conventional 120-volt power" and provide power to the light fixture;
- "conventional electrical outlet 60" located "in end cap 24" so that "other electrically operated devices" may be "plugged into electrical outlet 60";
- "control box 64" located "along electrical cord 56" and including "switch 66 for operating fluorescent lamp 30 and LEDs 32" that "slides linearly in slot 68 formed in control box 64"; and
- "circuit board 110" used to mount LEDs 32 and mount fluorescent lamp 30 with contact posts 90.

Ex. 1013, 2:45–46, 4:11–19, 4:33–36, 5:23–24, 5:31–33, 5:62–6:20, Fig. 2; *see id.* at 1:66–2:3, 2:17–22, 3:20–27, 4:28–32, code (57).

Fluorescent lamp 30 is "conventional" and emits white light. Ex. 1013, 3:30–31, 5:64–65. "LEDs 32 have a life that is much greater than that of a fluorescent or incandescent lamp." *Id.* at 3:35–36. "The LEDs may be of any suitable type emitting white light, or red, blue, or infrared 'invisible' light which is of particular use in military applications." *Id.* at 3:47–49, 5:64–66; *see id.* at 3:36–38, 3:59–61, 3:67–4:5, 6:43–45.

Switch 66 "has three positions": (1) "one position being the off position"; (2) "one position operating the fluorescent lamp"; and (3) "one position operating the LEDS." Ex. 1013, 6:20–23. Switch 66 "slides into one of the three positions and is rotatable to control the intensity of the light source." *Id.* at 6:23–25; *see id.* at 4:33–36.

2. Independent Claim 13

(a) Preamble

Claim 13 recites "[a] switch for controlling a correlated color temperature (CCT) of light emitted by a luminaire." Ex. 1001, 15:21–22 (preamble).

(i) Petitioner's Contentions

Petitioner contends that Reiff discloses claim 13's preamble because Reiff's light fixtures include:

(1) "both LED light sources and a fluorescent light source" where each light source "emits a different color of light"; and

(2) control box 64 with "a switch for . . . selecting between the different light sources."

Pet. 84 (alteration by Petitioner) (quoting Ex. 1013, 2:19–20, 4:29–30); *see* Reply 31 (citing Ex. 1013, 2:19–20).

Petitioner contends that Reiff's switch has "two 'on' positions" and permits selection between either "a regular white light fluorescent light source" and "a 'colored' LED light source" that "emits a first color, red or white for example." Pet. 84, 88 (quoting Ex. 1013, 4:31–32); Reply 32–33 (quoting Ex. 1013, 4:2–3). Petitioner contends that "Reiff's disclosure of selecting between light sources with different 'colors' encompasses selecting between fluorescent light source 30 (white light) and LED light source 32 (also white, though a different color than fluorescent light source 30)." Reply 33 (citing Ex. 1013, code (57)); *see* Pet. 88–89. According to Petitioner, "Reiff's different-colored light sources emit light of different CCTs," e.g., "warm white, cool white, etc." Reply 31, 33 (citing Ex. 1004

¶¶ 108–124);[14] *see* Pet. 84, 88–89 (citing Ex. 1004 ¶¶ 338, 350–351; Ex. 1013, 2:19–22).

(ii) Patent Owner's Contentions

Patent Owner contends that Reiff:

(1) "is not concerned with the concept of correlated color temperature at all";

(2) "does not even mention 'correlated color temperature' or 'CCT,' much less state that its switch for different sources would correspond to different CCT values";

(3) "does not address the concept of CCT selection"; and

(4) "is thus silent concerning any specific CCT values."

Resp. 31, 34 (citing Ex. 2030, 148:5–23, 148:24–150:2; Ex. 2031 ¶¶ 109–133); Sur-reply 8, 11 (citing Ex. 2030, 148:5–150:13; Ex. 2031 ¶¶ 131–132; Ex. 2052, 261:13–20).

Patent Owner asserts that "color temperature" describes "how warm or cool a white light source appears to the human eye" reported in "units of kelvin" corresponding to light from "a black-body radiator heated to that temperature" and "defined by the Planckian locus." Resp. 33–34 (citing Ex. 2030, 27:9–16; Ex. 2031 ¶¶ 120–122; Ex. 2044, 306–11;[15] Ex. 2051, 2–3); *see* Sur-reply 9. Patent Owner asserts that "correlated color temperature" describes "a range of white light" that does not "fall precisely

[14] In Exhibit 1004 (Declaration of J. Gary Eden), paragraphs 108 to 124 do not address Reiff. In Exhibit 1027 (Declaration of Dr. J. Gary Eden in Support of Petitioner's Reply), however, paragraphs 108 to 124 address Reiff.

[15] For Exhibit 2044 (E. Fred Schubert, *Light-Emitting Diodes* (2nd ed. 2006)), we cite to the page numbers appearing in the publication instead of the page numbers applied to the exhibit.

on" the Planckian locus for color temperature. Resp. 34 (citing Ex. 2031 ¶¶ 120–127; Ex. 2043, 1; Ex. 2044, 309); *see* Sur-reply 9. According to Patent Owner, CCT "characterize[s] the nuances of white light" and "differentiate[s] types of white light." Resp. 34, 36 (citing Ex. 2031 ¶ 127; Ex. 2044, 306; Ex. 2050, 6).

Patent Owner asserts that "saturated colors (e.g., red or blue) do not have an associated CCT, because they are so far off" the Planckian locus that "no meaningful correlation is possible." Sur-reply 9 (citing Ex. 2031 ¶¶ 125–127).

Further, Patent Owner asserts that Reiff discloses a lighting device with two different light sources producing "white" fluorescent light and "colored" LED light, respectively, where a user may toggle between three options, i.e., (1) both sources "off," (2) the first source "on" and the second source "off," and (3) the second source "on" and the first source "off." Resp. 31, 33, 35 (citing Ex. 1013, 4:28–32, 5:62–66, Fig. 2; Ex. 2030, 143:11–17; Ex. 2031 ¶¶ 111–115, 118–119); *see* Sur-reply 8 (citing Ex. 1013, 4:28–32, 5:62–66). Patent Owner also asserts that:

(1) Petitioner advances only an anticipation theory for Reiff;

(2) Petitioner relies on Reiff's Figure 2 for anticipation; and

(3) the light fixture in Reiff's Figure 2 produces "white" fluorescent light and "colored" LED light, i.e., "red, blue, or UV light."

See Resp. 33, 38, 40–41; Sur-reply 11 (emphasis omitted) (quoting Ex. 1013, 5:66); Tr. 49:23–25.

Additionally, Patent Owner contends that "Reiff uses 'color' to describe perceived color (e.g., 'blue'), which is not correlated color temperature," and "the concept of CCT would not even apply to Reiff's

'colored' light source." Resp. 33, 35 (citing Ex. 2030, 27:9–16; Ex. 2031 ¶¶ 120–122, 127, 131; Ex. 2050, 6; Ex. 2051, 2–3); *see id.* at 31–32 (citing Ex. 2031 ¶¶ 120–132; Ex. 2044, 306–11).

Patent Owner contends that two different colors or hues of white light "often have the same CCT value because CCT captures hues around the Planckian locus." Resp. 36 (citing Ex. 2031 ¶¶ 123–126). Patent Owner explains that two sources of white light "may output light at the exact same CCT (e.g., 4000 K), even though one outputs white light that leans yellow/ green, while the other outputs white light that leans pink/red." *Id.* at 37. Therefore, according to Patent Owner, an ordinarily skilled artisan "would have readily understood that while two different light sources may emit light of different perceived hues, that does not mean that those light sources emit light at different CCTs." *Id.* (emphasis omitted) (citing Ex. 2031 ¶¶ 124–126, 132).

Patent Owner also contends that Dr. Eden and Dr. Krames "agree that two different light sources, 'one LED and one non-LED,' could output light at the same color temperature." Resp. 32, 35 (citing Ex. 2030, 48:19–49:1; Ex. 2031 ¶¶ 120–132; Ex. 2044, 306–11).

(iii) <u>Analysis</u>

Generally, a preamble does not limit a claim. *Allen Eng'g*, 299 F.3d at 1346. We need not decide whether claim 13's preamble limits the claim because, for the reasons explained below, Reiff teaches claim 13's preamble. *See* Pet. 84–85; Reply 31–33; Ex. 1004 ¶¶ 85–87, 337–339, 350; Ex. 1027 ¶ 108.

First, as Patent Owner asserts, "color temperature" and "correlated color temperature" relate to the appearance of white light. *See* Resp. 33–34;

Ex. 2031 ¶¶ 120–122, 127; Ex. 2044, 309; Ex. 2050, 4–6; Ex. 2051, 2–3. For instance, the International Commission on Illumination (CIE) explains that "correlated color temperature" applies "only to white light stimuli." Ex. 2050, 6.

"The color temperature of white light generally falls within a range of from approximately 700 degrees K (generally considered the first visible to the human eye) to over 10,000 degrees K." Ex. 1011, 10:14–17. "Lower color temperatures generally indicate white light having a more significant red component or a 'warmer feel,' while higher color temperatures generally indicate white light having a more significant blue component or a 'cooler feel.'" *Id.* at 10:18–22; *see* Ex. 1004 ¶ 31; Ex. 1030, 2:36–40.

The following excerpt from the CIE 1960 (u, v) chromaticity diagram depicts the Planckian locus for color temperature and various correlated color temperatures:

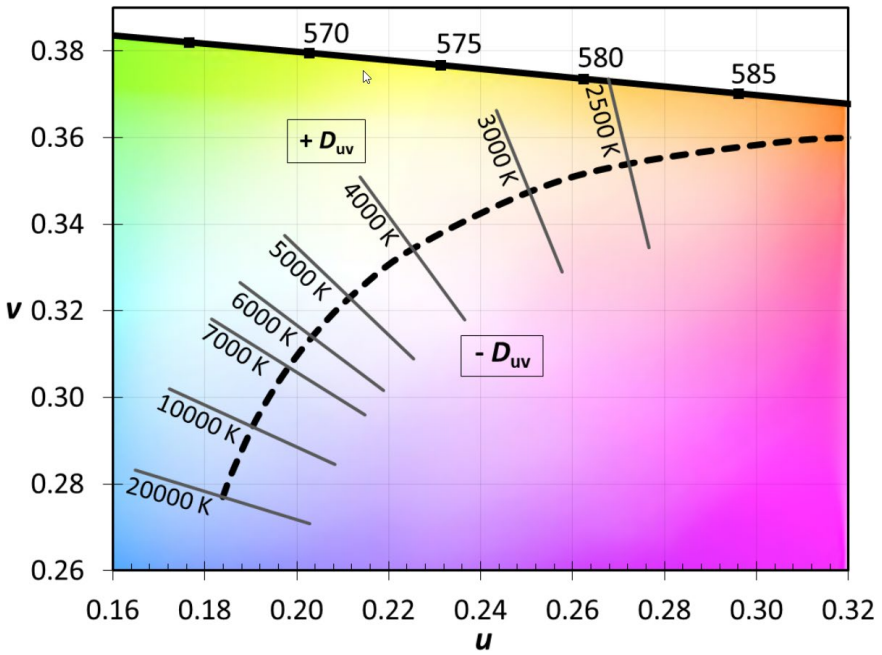

The above chromaticity diagram illustrates "u" units from 0.16 to 0.32 along the horizontal axis, "v" units from 0.26 to 0.38 along the vertical axis, the

Planckian locus for color temperature plotted as a dashed curve, and various solid straight lines perpendicular to the Planckian locus representing various constant CCT values. Ex. 2051, 3; *see* Ex. 1039, 5 (reproducing the CIE 1960 (u, v) chromaticity diagram); Ex. 2035, 2–3.

As shown in the above chromaticity diagram, the Planckian locus begins on the right in the red region of the visible spectrum, curves downward, and ends on the left in the blue region of the visible spectrum. Ex. 2051, 3; *see* Ex. 1027 ¶ 122. A light source with a positive D_{uv} value has a chromaticity that falls above the Planckian locus and a slightly greenish/yellowish tint. Ex. 2051, 3; *see* Ex. 2030, 40:7–13; Ex. 2031 ¶¶ 123–124; Ex. 2035, 3. A light source with a negative D_{uv} value has a chromaticity that falls below the Planckian locus and a slightly pinkish/ purplish tint. Ex. 2051, 3; *see* Ex. 2031 ¶¶ 123–124; Ex. 2035, 3.

Second, Reiff discloses light fixtures with two different light sources and switching between the two different light sources, e.g., using "a stepped dimmer switch." Ex. 1013, 1:63–2:28, 3:28–51, 3:67–4:5, 4:28–36, 5:62–66, 6:34–35, code (57); *see* Ex. 1004 ¶¶ 85–87; Ex. 1027 ¶¶ 104, 108. Reiff explains that "[e]ach of the light sources emits a different color of light." Ex. 1013, 2:19–20; *see* Ex. 1004 ¶¶ 87, 338, 350; Ex. 1027 ¶ 108. For example, a fluorescent lamp may provide a first source of white light and LEDs may provide either a second source of white light or red, blue, green, ultraviolet, or infrared light. Ex. 1013, 2:11–13, 2:19–25, 3:28–31, 3:47–51, 4:2–3, 4:31–32, 5:64–66, code (57); *see* Ex. 1004 ¶¶ 86–87, 338; Ex. 1027 ¶¶ 108, 126.

Reiff's Abstract describes light fixtures "for use in applications requiring conventional and specialized, dimmable lighting wherein the color

of the emitted light can easily be switched" between "fluorescent and/or LED light sources." Ex. 1013, code (57); *see* Ex. 1004 ¶¶ 85, 338. The Abstract explains that the "light sources may provide white light or specialized light including red or blue 'invisible' light." Ex. 1013, code (57).

Further, Reiff's Figure 2 illustrates a light fixture (identified as light 20 and light 108) with "two light sources 28," i.e., fluorescent lamp 30 and LEDs 32. Ex. 1013, 3:20–24, 3:28–30, 5:62–66, Fig. 2; *see* Ex. 1004 ¶¶ 85, 338. Reiff explains that the fluorescent lamp emits white light. Ex. 1013, 3:30–31, 5:64–65; *see* Ex. 1004 ¶¶ 86, 338. Reiff explains that the LEDs may emit "white light, or red, blue, or infrared 'invisible' light" or "red, blue, or UV light, for example." Ex. 1013, 3:47–48, 5:65–66. And Reiff discloses a three-position switch with "one position operating the fluorescent lamp" and "one position operating the LEDS." Ex. 1013, 6:20–23; *see* Ex. 1004 ¶ 87.

Third, Reiff uses the word "color" to describe not only monochromatic or saturated colors (e.g., red, green, and blue) but also white light. *See* Ex. 1013, 4:2–3, 6:43–45, 7:45–61; Ex. 1027 ¶ 125; Ex. 2030, 143:22–144:3. As an example, Reiff discloses an LED that "emits a first color, red or white for example." Ex. 1013, 4:2–3; *see* Ex. 1027 ¶ 125. As another example, Reiff's claim 1 recites a light fixture comprising "two light sources" with each light source "emitting a different color of light," and Reiff's claim 2 specifies that the "light colors are selected from the group consisting of white, red, green, blue, infrared, and ultraviolet light." Ex. 1013, 7:45–61; *see* Ex. 1027 ¶ 125. As yet another example, Reiff explains that "[b]esides the use of red and white light LEDs, other color

LEDs could be selected such as blue, green, UV, or infrared." Ex. 1013, 6:43–45.

Fourth, Reiff's disclosures about light fixtures with two different sources of white light and "[e]ach of the light sources emit[ting] a different color of light" teach switching between different colors of white light, including switching between white light with different CCT values. Ex. 1013, 2:11–13, 2:17–28, 3:28–51, 3:67–4:5, 4:28–36, 5:62–66, 7:45–61, code (57); *see* Ex. 1004 ¶¶ 87, 338, 350; Ex. 1027 ¶ 108. Reiff instructs that switching between the two different light sources produces a substantial change in chromaticity or wavelength, e.g., from white to red, white to blue, or white to infrared. Ex. 1013, 3:30–31, 3:47–48, 5:64–66; *see* Ex. 1027 ¶ 125.

If, however, a light fixture had two different sources of white light supplying light with the same CCT value, then switching between the two different light sources would produce only an insubstantial change in chromaticity, e.g., from a slightly greenish/yellowish tint to a slightly pinkish/purplish tint or vice versa. *See* Ex. 2051, 3. Although Patent Owner discusses the possibility that two different sources of white light could supply light with the same CCT value, Patent Owner does not indicate a reason for doing so when implementing Reiff's teachings. *See* Resp. 35–38.

Fifth, although Reiff does not discuss CCT, an ordinarily skilled artisan would have been familiar with CCT because, according to an American National Standard, CCT "is an important metric that has been used for decades to engineer and specify light sources." Ex. A to Ex. 2052,

i.e., Ex. A at 1;[16] *see* Ex. 1002, 16:64–17:2, Fig. 10b; Ex. 1011, 10:6–32; Ex. 1027 ¶ 70; Ex. 1034, 26:15–27; Ex. 2044, 307–11.

Sixth, based on Reiff's teachings, an ordinarily skilled artisan would have recognized that "two values of the CCT are available with the switch having the configuration shown by Reiff." Ex. 1004 ¶¶ 86–87; *see* Ex. 1013, 2:11–13, 2:17–28, 3:28–51, 3:67–4:5, 4:28–36, 5:62–66, 7:45–61, code (57), Fig. 2.

Seventh, contrary to Patent Owner's assertions, Petitioner does not advance only an anticipation theory for Reiff and rely only on Reiff's Figure 2. *See* Pet. 15, 84–89; Resp. 33, 38, 40–41; Reply 27–33; Sur-reply 11. Instead, Petitioner identifies the challenge based on Reiff as follows: "Reiff anticipates under § 102 and/or renders obvious under § 103." Pet. 15; *see* Inst. Dec. 14. For instance, when arguing that claim 13 would have been obvious over Reiff, Petitioner cites not only Reiff's disclosures relating to Figure 2 but also Reiff's Abstract, Summary of the Invention, and claims. *See, e.g.*, Pet. 84, 88 (citing Ex. 1013, 2:19–22, code (57)); Reply 31, 33 (citing Ex. 1013, 2:19–22, 3:67–4:3, 3:41–49, 6:43–45, 7:45–58, code (57)).

Further, Reiff's disclosures about different light fixtures, i.e., light 20 and light 108, relate to Figure 2. *See, e.g.*, Ex. 1013, 3:20–22, 5:62–66. Petitioner cites Reiff's disclosures about different light fixtures, i.e., light 20

[16] Exhibit A to Exhibit 2052 (Apr. 25, 2025, Eden Dep. Tr.) is a technical standard developed by the Illuminating Engineering Society (IES), titled "Technical Memorandum: IES Method for Determining Correlated Color Temperature (CCT) and Distance from the Planckian Locus of Light Sources," and designated as "ANSI/IES TM-40-24." *See* Ex. 2052, 238:10–25.

and light 108. *See, e.g.*, Pet. 84–88 (citing Ex. 1013, 4:16–19, 4:28–36, 6:18–24).

(b) Limitation 13a

Claim 13 recites "a body." Ex. 1001, 15:24 (limitation 13a).

(i) Petitioner's Contentions

Petitioner contends that Reiff discloses limitation 13a because (1) control box 64 includes switch 66 that is "linearly slideable in slot 68" and (2) control box 64 "provides and necessarily includes a body for the switch." Pet. 85–86 (citing Ex. 1013, 4:28–36, Fig. 2); Reply 27, 29 (citing Ex. 1004 ¶¶ 337–342; Ex. 2030, 139:1–140:11). According to Petitioner, an ordinarily skilled artisan "would have understood Reiff's switch as a slide switch with a body" because all electromechanical switches include "a body." Reply 23, 27 (citing Ex. 1013, 4:33–36; Ex. 2030, 223:24–224:5).

(ii) Patent Owner's Contentions

Patent Owner contends that Petitioner "identifies the switch 'body' in Reiff as the outer surfaces of control box 64." Resp. 39; *see id.* at 40; Sur-reply 12–13. Patent Owner also contends that "control box 64 is not a switch body" and "not part of the switch at all" but instead just "an outer casing within which other components (including a switch) may be located." Resp. 39–40 (emphasis omitted) (citing Ex. 1013, 4:28–39; Ex. 2031 ¶¶ 136–138, 154–155); *see id.* at 48.

(iii) Analysis

For the reasons explained below, Reiff teaches a switch with "a body" according to limitation 13a. *See* Pet. 85–86; Ex. 1004 ¶¶ 86–87; Ex. 1027 ¶¶ 84–85, 103–106. Specifically, Reiff explains that a light fixture (e.g., light 20 or light 108) "may be provided with control box 64" that includes "a

switch of any suitable type for turning the light on and off and selecting between different light sources 28." Ex. 1013, 4:28–30, 5:24–27; *see* Ex. 1004 ¶ 86; Ex. 1027 ¶ 104. Reiff discloses that control box 64 includes switch 66, i.e., "a stepped dimmer switch linearly slideable in slot 68 to select light source 28 and rotatable to control the brightness of light source 28." Ex. 1013, 4:33–36, 5:21–24, 6:18–20, 6:23–25; *see* Ex. 1004 ¶ 87; Ex. 1027 ¶ 104.

Switch 66 "has three positions": (1) "one position being the off position"; (2) "one position operating the fluorescent lamp"; and (3) "one position operating the LEDS." Ex. 1013, 6:20–23; *see* Ex. 1004 ¶ 87. Switch 66 "slides into one of the three positions and is rotatable to control the intensity of the light source." Ex. 1013, 6:23–25; *see id.* at 4:33–36; Ex. 1004 ¶ 87.

Additionally, an ordinarily skilled artisan "would have understood switch 66 to be a slide switch" that included "a body" according to limitation 13a because all slide switches include "a body." Ex. 1027 ¶¶ 85, 104–105; Ex. 2030, 223:24–224:18; *see* Ex. 1004 ¶ 87.

Patent Owner mischaracterizes Petitioner's position when contending that Petitioner "identifies the switch 'body' in Reiff as the outer surfaces of control box 64." *See* Pet. 85–86; Resp. 39–40; Reply 27, 29; Sur-reply 12. Instead, Petitioner contends that (1) control box 64 includes switch 66 that is "linearly slideable in slot 68" and (2) control box 64 "provides and necessarily includes a body for the switch." Pet. 85–86; Reply 27, 29.

(c) <u>Limitation 13b</u>

Claim 13 recites "at least one first coupling feature disposed on the body, wherein the at least one first coupling feature is configured to

electrically couple to an electrical cable of the luminaire." Ex. 1001, 15:25–28 (limitation 13b).

(i) Petitioner's Contentions

Petitioner contends that Reiff discloses limitation 13b because Reiff's light fixtures include:

(1) electrical cord 56 with "plug 58 at a distal end of the cord for insertion into a conventional electrical outlet" to receive "conventional 120-volt power"; and

(2) control box 64 located "along electrical cord 56" and "connected to the light device."

Pet. 86 (quoting Ex. 1013, 4:16–19, 6:18–19). Petitioner contends that because "control box 64 is located on the electrical cable 56, it is necessarily electrically coupled to electrical cable 56, and therefore must include at least one coupling feature." *Id.* (citing Ex. 1004 ¶ 344).

Further, Dr. Eden testifies that "both the input and output terminals of the control box (and switch) must be electrically connected to the cable 56 by soldering, screw terminals, spade lugs, pins, or a myriad of other connectors or connections." Ex. 1004 ¶ 344 (emphasis omitted). Dr. Eden explains that if "the control box (and switch) and cable are not electrically connected, current will not flow and the luminaire will not function." *Id.*

(ii) Patent Owner's Contentions

Patent Owner contends that Reiff "does not provide any details" concerning (1) "the contents of control box 64" or (2) "the construction of switch 66." Resp. 41 (citing Ex. 2030, 150:14–20, 154:17–156:3; Ex. 2031 ¶¶ 141–142). Patent Owner also contends that the "switch contained within control box 64" does not "necessarily need to be coupled with to [sic] electrical cable 56 to operate" because control box 64 could contain "a

wireless switch that is not configured to couple with the cable at all." *Id.* at 42 (citing Ex. 2030, 136:9–137:14, 150:14–20, 151:12–25, 153:2–6, 154:1–16, 159:7–12; Ex. 2031 ¶¶ 143–146); *see* Sur-reply 14.

(iii) Analysis

For the reasons explained below, we determine that Reiff teaches limitation 13b. *See* Pet. 86–87; Ex. 1004 ¶¶ 343–345; Ex. 1027 ¶¶ 84–85, 103–107.

First, Reiff discloses that electrical cord 56:

(1) extends from end cap 22 of a light fixture (e.g., light 20 or light 108);

(2) has "plug 58 at a distal end of the cord for insertion into a conventional electrical outlet" to receive "conventional 120-volt power"; and

(3) has "control box 64 located along the cord."

Ex. 1013, 4:16–19, 5:20–21, 6:18–20; *see* Ex. 1004 ¶¶ 86, 344; Ex. 1027 ¶ 107.

Second, as discussed above, Reiff discloses that control box 64 includes switch 66, i.e., "a stepped dimmer switch linearly slideable in slot 68 to select light source 28 and rotatable to control the brightness of light source 28." Ex. 1013, 4:33–36, 5:21–24, 6:18–20, 6:23–25; *see* Ex. 1004 ¶¶ 87, 338; Ex. 1027 ¶ 104; *supra* § IV.H.2(b)(iii).

Third, an ordinarily skilled artisan "would have understood switch 66 to be a slide switch" that included "a body" with "at least one first coupling feature" according to limitation 13b because all slide switches include "a body" with "at least one first coupling feature." Ex. 1027 ¶¶ 85, 104–105, 107; Ex. 2030, 223:24–224:18; *see* Ex. 1004 ¶ 344.

Fourth, an ordinarily skilled artisan also would have understood that "both the input and output terminals of the control box (and switch) must be electrically connected to the cable 56 by soldering, screw terminals, spade lugs, pins, or a myriad of other connectors or connections" because otherwise "current will not flow and the luminaire will not function." Ex. 1004 ¶ 344 (emphasis omitted); *see* Ex. 1027 ¶ 107.

Fifth, based on Reiff's disclosures, we disagree with Patent Owner that control box 64 could contain "a wireless switch that is not configured to couple with the cable at all." *See* Resp. 42. Reiff states that the invention "relates to lighting having multiple sources of light particularly useful for specialized industrial or military applications" where "the color of light emitted can be changed by an in line switch." Ex. 1013, 1:6–10, 1:53–55; *see id.* at 2:17–22, 3:7–11, code (57); Ex. 1027 ¶ 107. Further, Reiff's Figure 2 illustrates:

(1) a light fixture (identified as light 20 and light 108);

(2) electrical cord 56 that receives "conventional 120-volt power" and provides power to the light fixture; and

(3) control box 64 and switch 66 positioned between and in line with two sections of electrical cord 56.

Ex. 1013, 4:16–19, 5:20–21, 6:18–20, Fig. 2; *see* Ex. 1004 ¶¶ 85–86, 344; Ex. 1027 ¶ 107. An ordinarily skilled artisan "would have understood that in line switches" as disclosed in Reiff "are not wireless, and that they include a coupling feature configured to electrically couple to an electrical cable of the luminaire." Ex. 1027 ¶ 107.

Moreover, Reiff does not mention wireless transmission of either a control signal for actuating a switch or power to a light fixture, e.g., through inductive coupling. *See, e.g.*, Ex. 1013, 1:59–7:42, code (57); Ex. 1027

¶ 107. For instance, "Reiff neither mentions nor hints at a battery or a wireless transmitter." Ex. 1027 ¶ 107. Instead, Reiff discloses that a light fixture (e.g., light 20 or light 108) receives "conventional 120-volt power" via electrical cord 56 and switch 66 such that switch 66 has "one position operating the fluorescent lamp" and "one position operating the LEDS." Ex. 1013, 4:16–19, 4:33–36, 5:20–24, 6:18–23; *see* Ex. 1004 ¶¶ 86–87, 344, 347; Ex. 1027 ¶¶ 104, 107.

Although Petitioner establishes for § 103 that Reiff teaches limitation 13b, Petitioner does not establish for § 102 that the "at least one first coupling feature" in Reiff's switch 66 is "disposed on the body" instead of "disposed in the body." *See* Pet. 86–87; Reply 27–30; Ex. 1004 ¶¶ 86–87, 343–345, 347; Ex. 1027 ¶¶ 103–108.

(d) Limitation 13c

Claim 13 recites "an actuator disposed on the body, wherein the actuator has a range of positions." Ex. 1001, 16:1–2 (limitation 13c).

Petitioner contends that Reiff discloses limitation 13c because control box 64 includes switch 66 that has "an actuator." Pet. 87 (citing Ex. 1004 ¶ 347). As support, Petitioner provides the following highlighted version of Reiff's Figure 2:

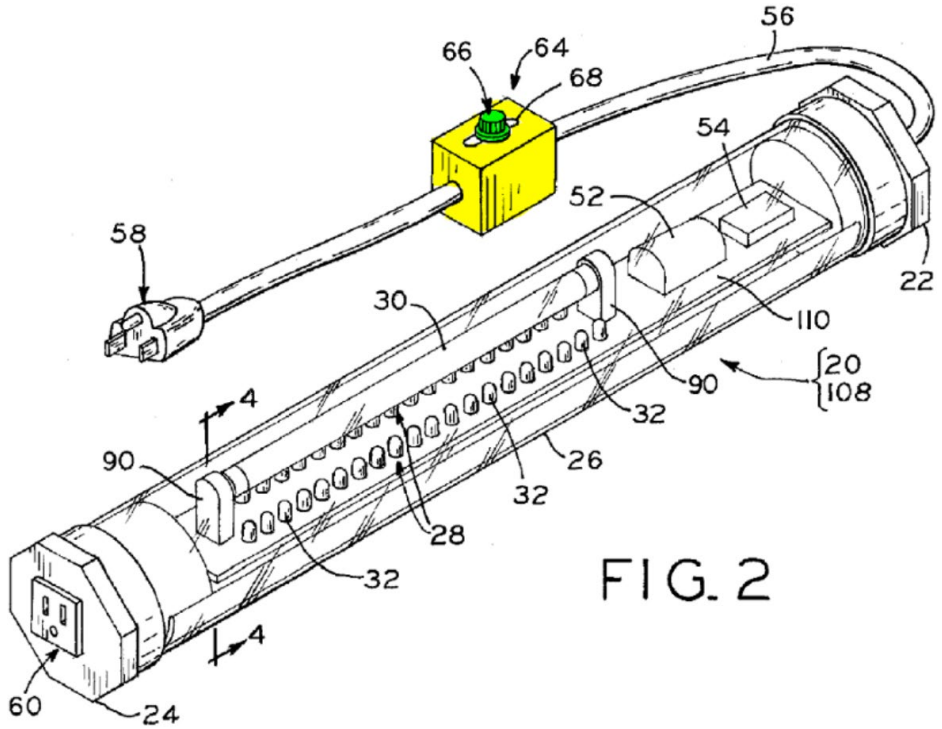

Figure 2 illustrates a light fixture (identified as light 20 and light 108) with control box 64 located "along electrical cord 56" and including "switch 66 for operating fluorescent lamp 30 and LEDs 32" that "slides linearly in slot 68 formed in control box 64." Ex. 1013, 2:45–46, 4:11–19, 4:33–36, 5:23–24, 5:31–33, 5:62–6:20, Fig. 2. The above highlighted version of Figure 2 includes yellow highlighting over the structure for control box 64 and green highlighting over the structure for switch 66 that Petitioner identifies as the claimed "actuator." *See* Pet. 88; Ex. 1004 ¶ 347.

As additional support, Petitioner quotes Reiff's disclosure about switch 66 as follows: "Switch 66 has three positions, one position being the off position as shown in Fig. 2, one position operating the fluorescent lamp and one position operating the LEDS. Switch 66 slides into one of the three positions." Pet. 87 (quoting Ex. 1013, 6:20–24).

Patent Owner makes no arguments specific to limitation 13c. *See, e.g.*, Resp. 31–43; Sur-reply 8–14.

For the reasons stated by Petitioner and supported by Dr. Eden's testimony, we agree with Petitioner that Reiff discloses limitation 13c. *See* Pet. 87–88; Ex. 1004 ¶¶ 86–87, 346–348.

(e) Limitation 13d

Claim 13 recites "wherein each position of the range of positions of the actuator corresponds to a CCT of the light emitted by the luminaire." Ex. 1001, 16:3–5 (limitation 13d).

The parties' respective arguments discussed above for claim 13's preamble also relate to limitation 13d. *See* Pet. 84, 88–89; Resp. 33–38; Reply 31–33; Sur-reply 8–11; *supra* §§ IV.H.2(a)(i)–(ii). For the reasons discussed above, we determine that Reiff teaches claim 13's preamble. *See supra* § IV.H.2(a)(iii). For the same reasons, we determine that Reiff teaches limitation 13d. *See id.*

(f) Alleged Objective Indicia of Nonobviousness

Above, we discussed Patent Owner's evidence and arguments regarding industry praise. *See supra* § IV.F.2(g)(ii). For the reasons discussed above, we see no reason to accord any weight to the ADEX award when considering whether a claimed invention would have been obvious. *See* Resp. 3–9; Ex. 2031 ¶¶ 58–71; Ex. 2041; *supra* § IV.F.2(g)(iii).

Also, assuming that some members of the Halo Commercial PR8 family of products are "coextensive (or nearly coextensive)" with claim 13, we accord little weight to the Home Depot evidence for the reasons discussed above. *See supra* § IV.F.2(g)(iii). But even if that evidence carried more weight, it would not outweigh the other evidence considered in the *Graham* analysis. *See Leapfrog*, 485 F.3d 1157 at 1162.

(g) Conclusion About Patentability for Claim 13

For the reasons discussed above, we determine that Reiff teaches the invention covered by claim 13 but does not disclose every element of claim 13 "arranged as in the claim." *See supra* §§ IV.H.2(a)–(e); *Net MoneyIN*, 545 F.3d at 1369. Further, for the reasons discussed above, we accord little weight to Patent Owner's evidence concerning objective indicia of nonobviousness. *See supra* §§ IV.F.2(g)(iii), IV.H.2(f). Hence, Petitioner has shown by a preponderance of the evidence that claim 13 is unpatentable under § 103 because the claim would have been obvious over Reiff.

3. DEPENDENT CLAIM 15

Claim 15 depends directly from claim 13 and specifies that "each position is discrete within the range of positions." Ex. 1001, 16:9–10.

Petitioner contends that Reiff discloses claim 15's limitation because (1) control box 64 includes switch 66 with "two 'on' positions" that constitute a "range of positions" and (2) "the switch actuator can only be set to one position at a time." Pet. 89 (citing Ex. 1004 ¶¶ 353–354; Ex. 1013, 6:20–24).

Patent Owner makes no arguments specific to claim 15. *See, e.g.*, Resp. 31–43; Sur-reply 8–14.

For the reasons stated by Petitioner and supported by Dr. Eden's testimony, we agree with Petitioner that Reiff discloses claim 15's limitation. *See* Pet. 89; Ex. 1004 ¶¶ 353–354. Further, for the reasons discussed above, we accord little weight to Patent Owner's evidence concerning objective indicia of nonobviousness. *See supra* §§ IV.F.2(g)(iii), IV.H.2(f). Hence, Petitioner has shown by a preponderance of the evidence

that claim 15 is unpatentable under § 103 because the claim would have been obvious over Reiff.

I. Alleged Anticipation by or Obviousness over Halliwell: Claims 1, 2–5, 7, 9–13, 15, 16, 19, and 20

Petitioner contends that claims 1, 2–5, 7, 9–13, 15, 16, 19, and 20 are unpatentable under § 102 as anticipated by Halliwell or § 103 as obvious over Halliwell. *See* Pet. 15, 59–82; Reply 8–10. Patent Owner disputes Petitioner's contentions. *See* Resp. 63–77; Sur-reply 26–27.

We need not decide whether claims 1, 2–5, 7, 9–12, 19, and 20 are unpatentable under § 102 or § 103 based on Halliwell because other challenges resolve the patentability of these claims favorable to Petitioner based on other asserted references. *See supra* §§ IV.F–IV.H; *SAS Inst. Inc. v. Iancu*, 584 U.S. 357, 371 (2018) (holding that a petitioner "is entitled to a final written decision addressing all of the claims it has challenged"); *Bos. Sci. Scimed, Inc. v. Cook Grp. Inc.*, 809 F. App'x 984, 990 (Fed. Cir. 2020) (agreeing that the Board "need not address issues that are not necessary to the resolution of the proceeding").

As for claims 13, 15, and 16, for the reasons discussed above a preponderance of the evidence establishes February 19, 2016, as the effective filing date for claims 13, 15, and 16. *See supra* §§ IV.E.2(c), IV.E.3(c), IV.E.4(c), IV.E.5–IV.E.6. That effective filing date precedes Halliwell's September 23, 2016, filing date, thus disqualifying Halliwell as prior art for claims 13, 15, and 16. *See* Ex. 1012, code (22); 35 U.S.C. § 102(a)(2). Because Halliwell does not qualify as prior art for claims 13, 15, and 16, Petitioner has not shown the unpatentability of these claims based on Halliwell.

V. PATENT OWNER'S UNOPPOSED MOTION TO SEAL

A. Introduction

As discussed above, Patent Owner filed an Unopposed Motion to Seal the Response (Paper 29) submitted on December 23, 2024, and two exhibits (Exhibits 2046 and 2047) that were (1) produced in the Wisconsin case with the designation "Attorneys Eyes Only," (2) submitted with the Response, and (3) quoted in the Response. *See* Paper 28 ("Mot."); *supra* § II.B. Concurrently with filing the Unopposed Motion to Seal, Patent Owner submitted a Stipulated Protective Order for entry by the Board. *See* Ex. 2048. Patent Owner explains that the Stipulated Protective Order "tracks the protective order" in the Wisconsin case "per Petitioner's request." Mot. 1.

B. Patent Owner's Position

Patent Owner asserts that the Response (Paper 29) submitted on December 23, 2024, "contains quotations and references to Exhibits 2046 and 2047, which has been designated by Petitioner and Menard as Stipulated Protective Order material" and "requires confidentiality." Mot. 3. Patent Owner explains that Exhibits 2046 and 2047 are communications between Petitioner and Menard, "including communications with counsel." *Id.* at 3–4. Patent Owner asserts that Petitioner and Menard have agreed that Exhibits 2046 and 2047 "be submitted in this proceeding under the condition" that Patent Owner treat the exhibits as "Attorneys Eyes Only" under the Stipulated Protective Order. *Id.* at 3. Patent Owner also asserts that Petitioner and Menard "have indicated that public disclosure would cause harm." *Id.*

Further, Patent Owner asserts that it relies on Exhibits 2046 and 2047, among other evidence, to argue that "Menard is an RPI and/or privy of Petitioner Luminex, and therefore that the Petition" is time barred under § 315(b). Mot. 3; *see supra* § III.E. According to Patent Owner, Exhibits 2046 and 2047 "are not available from any non-confidential sources and are highly relevant to Patent Owner's arguments." Mot. 3.

Additionally, Patent Owner asserts that, on balance, the interest in maintaining confidentiality outweighs the strong public interest in having an open record, e.g., because "the communications involved [Petitioner's] counsel" and "Petitioner allowed Patent Owner to produce the documents under the agreement that suitable steps would be taken to maintain the confidentiality of the documents." Mot. 3–4.

C. Analysis

A strong public policy favors making all information filed in an *inter partes* review open to the public, e.g., because the proceeding determines the patentability of claims in an issued patent and, therefore, affects the rights of the public. *See Garmin Int'l, Inc. v. Cuozzo Speed Techs. LLC*, IPR2012-00001, Paper 34 at 1 (PTAB Mar. 14, 2013); Paper 15, 3 (Scheduling Order). Hence, in an *inter partes* review, the default rule is that all papers and exhibits are open and "available to the public." 35 U.S.C. § 316(a)(1); *see* 37 C.F.R. § 42.14. A party may, however, file papers or exhibits under seal along with a motion to seal, and then the papers or exhibits will be "treated as sealed pending the outcome of the ruling on the motion." 35 U.S.C. § 316(a)(1); *see* 37 C.F.R. § 42.14.

The Board's rules "identify confidential information in a manner consistent with Federal Rule of Civil Procedure 26(c)(1)(G), which provides

for protective orders for trade secret or other confidential research, development, or commercial information." CTPG at 19 (citing 37 C.F.R. § 42.54); *see* 37 C.F.R. § 42.2 (defining "Confidential information"). The Board seeks to "strike a balance between the public's interest in maintaining a complete and understandable file history and the parties' interest in protecting truly sensitive information." CTPG at 19.

In deciding a motion to seal, the Board applies a "good cause" standard. *See* 37 C.F.R. § 42.54(a). "The 'good cause' standard for granting a motion to seal reflects the strong public policy for making all information in an *inter partes* review open to the public." *Argentum Pharms. LLC v. Alcon Rsch., Ltd.*, IPR2017-01053, Paper 27 at 3 (PTAB Jan. 19, 2018) (informative). When assessing whether that standard has been met, we may consider whether the information at issue is truly confidential, whether harm would result from public disclosure, and whether the interest in maintaining confidentiality as to the information outweighs the strong public interest in an open record. *Id.* at 3–4. The movant bears the burden to establish entitlement to the requested relief. *See* 37 C.F.R. § 42.20(c).

We have reviewed the materials at issue and determine that Patent Owner has established good cause for sealing the Response (Paper 29) submitted on December 23, 2024, and Exhibits 2046 and 2047 because those materials reflect or contain confidential information. *See* Mot. 3–4. Moreover, Patent Owner has submitted a public version of the Response (Paper 31) with redactions limited to a few paragraphs discussing Exhibits 2046 and 2047. *See* Resp. 78, 80–81. The public version of the Response strikes an appropriate "balance between the public's interest in maintaining a complete and understandable file history and the parties'

interest in protecting truly sensitive information." *See* CTPG at 19. Additionally, the general nature Patent Owner's reliance on the confidential information is discernable from the public version of the Response. *See* Resp. 78–82.

We have also reviewed the Stipulated Protective Order (Exhibit 2048) and consider it appropriate for entry in this proceeding.

VI. CONCLUSION

Based on the evidence presented with the Petition, the evidence introduced during the trial, and the parties' respective arguments, Petitioner has shown by a preponderance of the evidence that:

(1) claims 1, 3, 6, 7, 9, 11, 12, 18, and 19 are unpatentable under § 103 because the claims would have been obvious over Chaimberg;

(2) claims 2, 4, 5, 10, 14, and 20 are unpatentable under § 103 because the claims would have been obvious over Chaimberg and Roberge; and

(3) claims 13 and 15 are unpatentable under § 103 because the claims would have been obvious over Reiff.

Petitioner has not shown by a preponderance of the evidence that claims 8, 16, and 17 are unpatentable based on the asserted references.

In summary:[17]

Claim(s)	35 U.S.C. §	Reference(s)/ Basis	Claim(s) Shown Unpatentable	Claim(s) Not Shown Unpatentable
1, 3, 6–9, 11–13, 15, 17–19	102	Chaimberg		1, 3, 6–9, 11–13, 15, 17–19

[17] Should Patent Owner wish to pursue amendment of the challenged claims in a reissue or reexamination proceeding after the issuance of this Final

Claim(s)	35 U.S.C. §	Reference(s)/ Basis	Claim(s) Shown Unpatentable	Claim(s) Not Shown Unpatentable
1, 3, 6–9, 11–13, 15, 17–19	103	Chaimberg	1, 3, 6, 7, 9, 11, 12, 18, 19	8, 13, 15, 17
2, 4, 5, 10, 14, 16, 20	103	Chaimberg, Roberge	2, 4, 5, 10, 14, 20	16
13, 15	102	Reiff		13, 15
13, 15	103	Reiff	13, 15	
1, 2–5, 7, 9–13, 15, 16, 19, 20	102	Halliwell[18]		13, 15, 16
1, 2–5, 7, 9–13, 15, 16, 19, 20	103	Halliwell[19]		13, 15, 16
Overall Outcome			1–7, 9–15, 18–20	8, 16, 17

Written Decision, we draw Patent Owner's attention to the April 2019 Notice Regarding Options for Amendments by Patent Owner Through Reissue or Reexamination During a Pending AIA Trial Proceeding. *See* 84 Fed. Reg. 16,654 (Apr. 22, 2019). If Patent Owner chooses to file a reissue application or a request for reexamination of the challenged patent, we remind Patent Owner of its continuing obligation to notify the Board of any such related matters in updated mandatory notices. *See* 37 C.F.R. §§ 42.8(a)(3), (b)(2).

[18] In view of our determination that claims 1, 2–5, 7, 9–12, 19, and 20 are unpatentable based on other challenges, we do not reach this challenge to those claims. *See supra* § IV.I.

[19] In view of our determination that claims 1, 2–5, 7, 9–12, 19, and 20 are unpatentable based on other challenges, we do not reach this challenge to those claims. *See supra* § IV.I.

VII. ORDER

Accordingly, it is

ORDERED that claims 1–7, 9–15, and 18–20 in the ’336 patent are determined to be unpatentable;

FURTHER ORDERED that claims 8, 16, and 17 in the ’336 patent are not determined to be unpatentable;

FURTHER ORDERED that Patent Owner’s Unopposed Motion to Seal (Paper 28) is granted and the Response (Paper 29) submitted on December 23, 2024, and Exhibits 2046 and 2047 will remain filed as “Parties and Board” in the Patent Trial and Appeal Case Tracking System (P-TACTS);

FURTHER ORDERED that the Stipulated Protective Order (Exhibit 2048) is entered; and

FURTHER ORDERED that, because this is a Final Written Decision, the parties to the proceeding seeking judicial review of the decision must comply with the notice and service requirements of 37 C.F.R. § 90.2.

For PETITIONER:

Joshua R. Nightingale
Vishal V. Khatri
Jeffrey S. Messing
JONES DAY
jrnightingale@jonesday.com
vkhatri@jonesday.com
jmessing@jonesday.com

Charles J. Meyer
Scott J. Collins
WOODARD, EMHARDT, HENRY, REEVES & WAGNER LLP
cjmeyer@uspatent.com
scollins@uspatent.com

For PATENT OWNER:

Justin J. Oliver
John D. Carlin
Jason M. Dorsky
Stephen K. Yam
VENABLE LLP
joliver@Venable.com
jcarlin@Venable.com
jmdorsky@Venable.com
syam@Venable.com
Signify-IPRs@Venable.com