Modeling and Anaysis of IPT System Used for PRT

Byung-Song Lee*, Kyung-Hee Han**
*Department of Electricity & signalling, Korea Railroad Research Institute, Uiwang, Kyonggi, Korea 437-757
Phone: 82-31-460-5404 Fax: 82-31-460-5459 E-mail: bslee@krri.re.kr
**Department of Electrical Engineering, Dongguk University, Seoul, Korea 100-715
Phone: 82-2-2260-3347 Fax: 82-2-2260-4625 E-mail: h78kh@dongguk.edu

***Abstract*- This paper shows the analysis of the inductive power transfer system in conjunction with series resonant converter operating variable high frequency. Of particular interest is the sensitivity of the complete system to variations in operational frequency and parameters.**

In inductive power transfer system, electrical power is transferred from a primary winding in the form of a coil or track, to one or more isolated pick-up coils that may relative to the primary. The ability to transmit power without contact enables high reliability and easy maintenance that allows inductive power transfer system to be implemented in hostile environments. This technology has found application in many fields such as electric vehicles, PRT(Personal Rapid Transit) etc.

The coupling between the primary and secondary is then presented to include the effects of parameters and operational frequency variation.

I. INTRODUCTION

Our increasingly urbanized civilization must pay a great attention to its cities, which are growing in size and complexity. One of the major challenges of our time is how to ensure that cities have operationally and economically efficient services which enhance their environment, their social and cultural values. Electric vehicles were given as the alternative system but had residual problems, such as short traveling distance per once charge. The Personal Rapid transit(PRT) system is a unique electric vehicle system that receives electric power by inductive coupling from an inductor buried beneath the road surface. This vehicle can operate with a virtually unlimited range while its battery is recharged.

The inductive power transfer (IPT) systems are based on the fundamental principles of transformer. Typical IPT systems such as transformers and induction motors are well understood and generally have a high coupling factor between the primary and secondary.

Recently however, high power transfer IPT systems have been developed in applications that require large air gaps and consequently much lower coupling[1]-[4].

This systems have limited power transfer capability unless compensation of the secondary winding and primary winding is implemented. However these compensation networks cannot be considered independently if the design objectives of controllability and high power transfer capability are to be achieved. Of particular interest is the sensitivity of the complete systems to variations of in operational frequency and parameters.

This paper will focus on the analysis of the inductive power transfer system in conjunction with series resonant converter operating variable high frequency. Of particular interest is the characteristic of the complete system to variations in operational frequency and parameters. This equivalent circuit model includes the roadway inductor, the vehicle-mounted pickup inductor, and the onboard circuitry for control of the coupled power. The roadway inductor receives its power from a rectifier/inverter system that converts the standard 3phase, 60Hz power to a higher variable frequency. On the vehicle side, the transferred power is collected through an large air gap by a pickup inductor mounted beneath the vehicle.

II. DEFINITION OF THE MODEL PARAMETER

A. Estimation of Parameters for Inductive Power Transfer System

In principle, IPT system combines two magnetically coupled parts, primary and secondary, similar to a conventional transformer. This section develops the defining equations of the circuit model and discusses experimental procedures for identifying model parameters. To analyze the electrical characteristics of the IPT system, the electrical equivalent circuit model of the contactless power collector(shown in fig. 1.) must be developed.

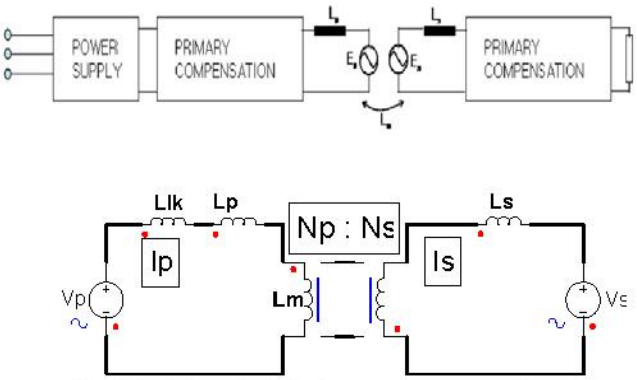

Fig. 1 Equivalent circuit for the contactless power collector

The defining equations of the circuit model may be derived based on the equivalent circuit shown in Figure 1. The total flux produced by the the power rail (primary) current, i_p is given by

InductEV, Inc.
Exhibit 1021
Page 001

$$\lambda_p = \lambda_{mp} + \lambda_{Lp} \quad (1)$$

where λ_{mp} corresponds to the power rail flux lines that link a portion or all of the conductors in the pickup slot and λ_{Lp} is the net leakage flux linking only the conductors in the power slot, Likewise, the total flux produced by the pickup (secondary) current i_s can be written as

$$\lambda_s = \lambda_{ms} + \lambda_{Ls} \quad (2)$$

where λ_{ms} corresponds to the power rail flux lines that link a portion or all of the conductors in the pickup slot and λ_{Ls} is the net leakage flux linking only the conductors in the power slot,

$$V_p = E_p + N_p \, d\lambda_{Lp}/dt + L_{lk} \, di_p/dt \quad (3)$$

$$V_s = (N_s/N_p)E_p + N_s \, d\lambda_{Ls}/dt \quad (4)$$

where

$$E_p = N_p \, d(\lambda_{mp} - \lambda_{ms})/dt \quad (5)$$

is the emf induced in the power rail by the equivalent mutual flux $\lambda_{mp} - \lambda_{ms}$, L_{lk} is the equivalent inductance of the uncoupled portion of the power rail, and N_p and N_s are the number of turns of the power rail and pickup inductors respectively. Voltage drops due to the resistance of the power rail and pickup inductors are ignored, as are the core losses. The emf induced by λ_{mp} in the power rail and pickup inductors are given by

$$N_p \, d\lambda_{mp}/dt = L_m \, di_p/dt \quad (6)$$

and

$$N_s \, d\lambda_{mp}/dt = nL_m \, di_p/dt = M di_p/dt \quad (7)$$

Where $n = N_s/N_p$ is the transformation ratio, L_m is the magnetizing inductance defined as

$$L_m = N_p \, \lambda_{mp}/i_p \quad (8)$$

and $M = nL_m$ is the mutual inductance between the power rail and pick up inductors. The voltage induced by λ_{ms} in the power rail inductors is

$$M di_s/dt = nL_m \, di_s/dt \quad (9)$$

Substitute (6) and (9) in (5) to obtain

$$E_p = L_m \, d(i_p - ni_s)/dt \quad (10)$$

Define $L_p = N_p \, \lambda_{Lp}/i_p$ and $L_s = N_s \, \lambda_{Ls}/i_s$ as the leakage inductances of the power rail and pickup inductors respectively, alternatively, (3) and (4) may be written as

$$V_p = E_p + (L_p + L_{lk}) di_p/dt \quad (11)$$

and

$$V_s = nE_p + L_s \, di_s/dt \quad (12)$$

B. Determination of the Model Parameters

The uncoupled, open-circuit, and short-circuit tests yield the inductances of the equivalent circuit model shown in Fig. 1.

Uncoupled test - The power rail current i_p, power rail voltage V_p and frequency are measured. The equivalent inductance of the uncoupled portion of the power rail can be calculated from

$$L_{lk} = \frac{V_p}{\omega i_p}\left(1 - \frac{Q_s}{Q_p}\right) \quad (13)$$

Where ω is the radian frequency.

Q_s is the length of the pickup inductor

Q_p is the length of the power rail

Open-circuit test - The IPT system is energized with the pickup inductor open-circuited and perfectly centered over the power rail inductor. Measurements of i_p, v_p, v_s, and f are made. Values of L_p and L_m can be calculated from

$$L_p = [(nv_p - v_s)/n\omega i_p] - L_{lk} \quad (14)$$

and

$$L_m = v_s/\omega n i_p \quad (15)$$

Short-Circuit Test - The IPT system is energized with the pickup short-circuited and perfectly centered over the power rail inductor. The quantities i_p and i_s are measured. The leakage inductance L_s is calculated from

$$L_s = nL_m(i_p - ni_s)/i_s \quad (16)$$

The ability of the IPT system to transfer power is maximized when the pickup inductor is perfectly entered over the power rail inductor or, in other words, when L_m is maximized.

C. Determination of the model parameters

The compensation of leakage inductance is not a new idea. And it has been used in power system generally. In general examples, there're a power factor compensation capacitor of

InductEV, Inc.
Exhibit 1021
Page 002

a long power line and a series compensation capacitor. But, active power is smaller than reactive power in general power system, while compensation level is fifty times of input power. For compensating leakage inductance, there are two choices. One is compensation method, and another is compensation level.

There are series and parallel compensation in the compensation methods. Because the series compensation of the secondary part has character of voltage source, it is reasonable to the system which has DC bus. According to application cases, the method of compensation for primary part is different respectively. But, in this paper, the line voltage has a very high value, due to application in a long track. The series compensation is proper to in this case because power supply voltage is decreased to the level in which management of voltage is easy.

The compensation level is defined by quality factor of resonant circuit. The quality factor is presented by using the ratio between active power and reactive power. For compensating both primary and secondary part, quality factor is divided into two elements. (primary quality factor: q_p, secondary quality factor: q_s)

$$q_p = VAR_P/P \tag{17}$$

$$q_s = VAR_S/P \tag{18}$$

Where, VAR_P and VAR_S are primary reactive power and secondary reactive power, respectively. In secondary part, large q_s increase capability of transfer power at the cost of secondary power rating. The actual q_s is in the value from 2 to 10.

The quality factor of primary part is defined by the input current and figure of primary part. q_p can be changed in accordance with various methods of design of primary part and it has a value from 2 to 50. The rate of q_p and q_s is very important. There are three cases, $q_p >> q_s$, $q_p \sim q_s$, and $q_p << q_s$. In the view of stability, the case of $q_p >> q_s$ is proper, but it couldn't be always designed with the most effective way.

III. SIMULATION MODEL OF IPT SYSTEM WITH RESONENT CONVERTER

A. *Simulation Model*

The simulation model of IPT system (shown in fig 2.) has two compensation circuits in primary and secondary part. It consists of two inductively coupled independent electrical systems. The primary part of the IPT system produces current in the power rail inductance L_p through a suitable resonant power supply with some primary compensation necessary to minimize the VA rating of supply. [5] In secondary pickup inductors, compensation capacitor is also required. The pick-up inductors can move with respect to the track. The onboard power control system is basically a tuned circuit with the control parameter being a capacitance to enhance the power transfer capability. The output current of this circuit is then rectified and filtered before being supplied to the onboard battery for recharging or resistor load.

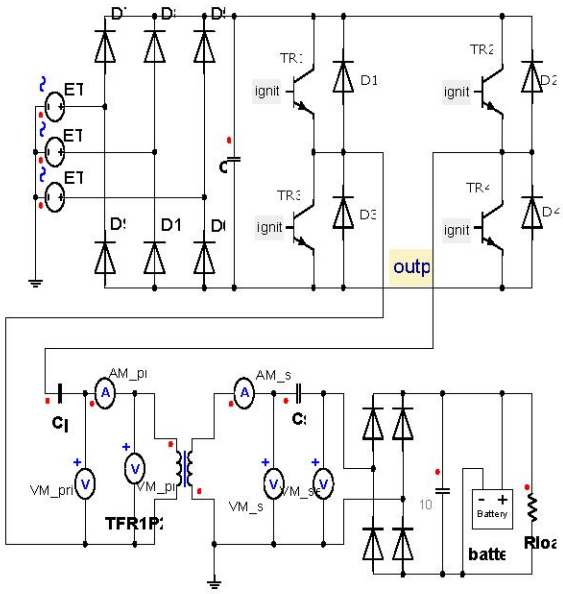

Fig. 2. The simulation model of IPT system

B. *Simulation condition*

The simulation condition of IPT system is shown in TABLE I.

TABLE I
SPECIFICATION OF IPT SYSTEM

SYMBOL	SPECIFICATION	VALUE (/RANGE)
V_p	Primary voltage (V)	AC 200
V_s	Secondary voltage (V)	VARIABLE
f	Frequency (kHz)	20 ~ 37
L_{lk}	Uncoupled inductance (H)	5μ ~0.123m
Cp	Primary capacitor (nF)	268
Cs	Secondary capacitor (nF)	213

When compensating for the leakage inductances, the compensation topology has to be decided on, and the level of compensation needs to be determined. In this simulation, a compensation capacitor is placed in series with the primary or secondary leakage inductance. The resonant frequency depends on the primary inductance and compensation capacitance.

C. *The Simulation Results of IPT System*

The frequency of the IPT system should be controlled at zero phase angle of power supply output to maximize the power transfer capability. The performance of the IPT system is highly influenced by its parameter. A variation of pickup length may cause uncoupled portion inductance (L_{lk}) to variable as shown fig.3.(a). The reason for this is that there is an increase or decrease in the primary inductance. As a result, if there is no considering other parameters, according to increment of the L_{lk}, the output power is decreased as shown fig.3.(e).

InductEV, Inc.
Exhibit 1021
Page 003

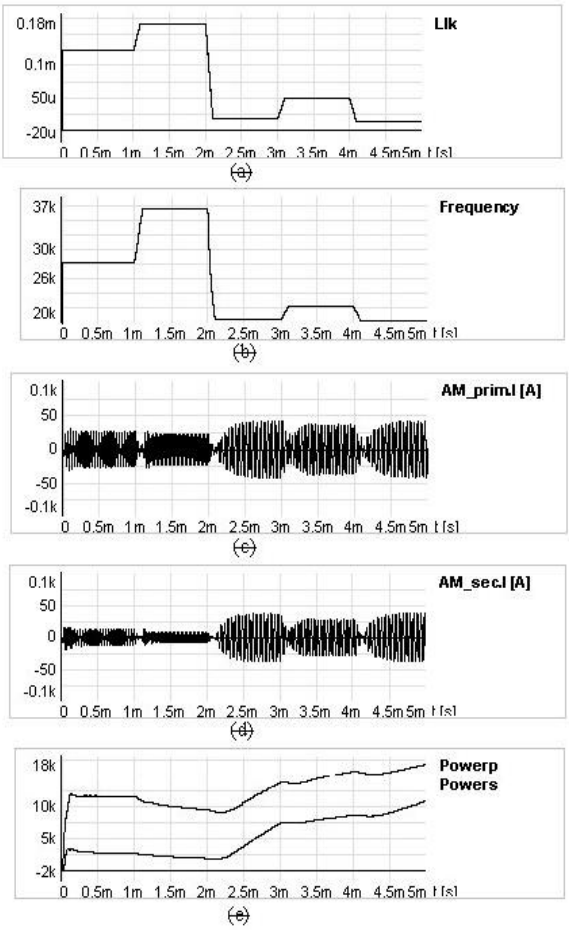

(a) Uncoupled portion inductance of the power rail (L_{lk})

(b) Resonant frequency by variable L_{lk}

(c) Variation of primary current(I_p)

(d) Variation of secondary current(I_s)

(e) Variation of primary and secondary power

Fig. 3. Characteristics of IPT system output by variable frequency

V. CONCLUSION

In this paper, a general structure of IPT system is developed with series resonant converter operating variable high frequency. This is used as a SIMPLORER simulation tool to investigate power transfer capability to variations in operational frequency and parameters (Equivalent inductance of the uncoupled portion). It is expected to need the studies for the design facts of IPT system like as resonant converter control techniques, parameter estimation method, etc, and the verification of the simulation results through experiments in this study hereafter.

REFERENCES

[1] J.T.Boys, G.A.Covic, and A.W.Green, "Stability and control of inductively coupled power transfer systems," IEE Proc., Electr.Power Appl., 2000, 147,(1) pp.37-43, 2000.

[2] Hiroshi Sakamoto and Koosuke Harada, "A novel hign power converter for non-contact charging with magnetic coupling," IEEE Trans. On MAGNETICS, vol.30, No.6, pp.4755-4757, November 1994.

[3] H. Sakamoto and K.Harada, "A novel circuit for non-contact charging through electromagnetic coupling," in PESC'93 Record, pp.168-174, Spain, 1992

[4] C. Wang, O. H. Stielau, G.A. Covic, "Load models and their application in the design of loosely coupled inductive power transfer systems," IEEE-PES/IEE/DSEE International Conference ofn Power System Technology, POWERCON 2000, Perth Australia, December 4th-7th, pp. 1053-1058, 2000.

[5] G.H.Royer, "A switching DC-to-DC converter having an output frequency proportional to the DC input voltage," AIEE Trans. Vol.74, pp.322-324.

InductEV, Inc.
Exhibit 1021
Page 004