SAE International™	SURFACE VEHICLE RECOMMENDED PRACTICE	SAE J1772™ JAN2010 Issued 1996-10 Revised 2010-01 Superseding J1772™ NOV2001

(R) SAE Electric Vehicle and Plug in Hybrid Electric Vehicle Conductive Charge Coupler

RATIONALE

This recommended practice redefines AC Level 1 and AC Level 2 charge levels and specifies a new conductive charge coupler and electrical interfaces for AC Level 1 and AC Level 2 charging. The coupler and interfaces for DC charging are currently being developed and will be added to this document upon completion. Adoption of multiple standard charge couplers based on charge level will enable selection of an appropriate charge coupler based on vehicle requirements thus allowing for better vehicle packaging, reduced cost, and ease of customer use.

FOREWORD

Energy stored in a battery provides power for an Electric Vehicle (EV) or Plug In Hybrid Electric Vehicles (PHEV). Conductive charging is a method for connecting the electric power supply network to the EV/PHEV for the purpose of transferring energy to charge the battery and operate other vehicle electrical systems, establishing a reliable equipment grounding path, and exchanging control information between the EV/PHEV and the supply equipment. This document describes the electrical and physical interfaces between the EV/PHEV and supply equipment to facilitate conductive charging. Functional and performance requirements for the EV/PHEV and supply equipment are also specified. This document contains 51 pages, including this page, and should not be used as a design tool if any of the pages are missing.

NOTE: This SAE Recommended Practice is intended as a guide toward standard practice and is subject to change in order to harmonize with international standards and to keep pace with experience and technical advances.

TABLE OF CONTENTS

1. SCOPE 4

2. REFERENCES 4
2.1 Applicable Publications 4
2.1.1 SAE Publications 4
2.1.2 Canadian Standards Association Publication 4
2.1.3 Federal Communication Commission Publications 4
2.1.4 International Electrotechnical Commission Publication 5
2.1.5 International Standards Organization Publication 5
2.1.6 National Fire Protection Association Publication 5
2.1.7 Underwriters Laboratories Inc. Publications 5
2.2 Related Publications 5
2.2.1 SAE Publications 6
2.2.2 International Electrotechnical Commission Publications 6
2.2.3 Underwriters Laboratories Inc. Publications 6

SAE Technical Standards Board Rules provide that: "This report is published by SAE to advance the state of technical and engineering sciences. The use of this report is entirely voluntary, and its applicability and suitability for any particular use, including any patent infringement arising therefrom, is the sole responsibility of the user."

SAE reviews each technical report at least every five years at which time it may be reaffirmed, revised, or cancelled. SAE invites your written comments and suggestions.

Copyright © 2010 SAE International

All rights reserved. No part of this publication may be reproduced, stored in a retrieval system or transmitted, in any form or by any means, electronic, mechanical, photocopying, recording, or otherwise, without the prior written permission of SAE.

TO PLACE A DOCUMENT ORDER: **Tel: 877-606-7323 (inside USA and Canada)**
Tel: 724-776-4970 (outside USA)
Fax: 724-776-0790
Email: CustomerService@sae.org
SAE WEB ADDRESS: http://www.sae.org

SAE values your input. To provide feedback on this Technical Report, please visit http://www.sae.org/technical/standards/J1772_201001

3. DEFINITIONS 7
3.1 AC Level 1 Charging 7
3.2 AC Level 2 Charging 7
3.3 Charger 7
3.4 Chassis Ground 7
3.5 Conductive 7
3.6 Connector (Charge) 7
3.7 Contact (Charge) 7
3.8 Control Pilot 7
3.9 Coupler (Charge) 8
3.10 DC Charging 8
3.11 Electric Vehicle (EV) 8
3.12 Electric Vehicle Supply Equipment (EVSE) 8
3.13 Equipment Ground (Grounding Conductor) 8
3.14 EV/PHEV Charging System 8
3.15 Insulator 8
3.16 Off-Board Charger 8
3.17 On-Board Charger 8
3.18 Plug In Hybrid Electric Vehicle (PHEV) 8
3.19 Vehicle Inlet (Charge) 9

4. GENERAL CONDUCTIVE CHARGING SYSTEM DESCRIPTION 9
4.1 AC Level 1 and AC Level 2 Interface Functions 9
4.2 AC Level 1 Charging 11
4.3 AC Level 2 Charging 12
4.4 DC Charging 12

5. CONTROL AND DATA 12
5.1 Typical Control Pilot Circuit 13
5.2 Equivalent Control Pilot Circuit 13
5.3 Control Pilot Functions 15
5.3.1 Verification of Vehicle Connection 15
5.3.2 EVSE Ready to Supply Energy 15
5.3.3 EV/PHEV Ready to Accept Energy 15
5.3.4 Determination of Indoor Ventilation 15
5.3.5 EVSE Current Capacity 15
5.3.6 Verification of Equipment Grounding Continuity 17
5.4 Proximity Detection 17
5.5 Digital Data Transfer 18
5.6 Typical Start Up Sequence 20

6. GENERAL EV/PHEV REQUIREMENTS 21
6.1 EV/PHEV Cable Ampacity Coordination 21
6.2 Environmental 22

7. GENERAL EVSE REQUIREMENTS 22
7.1 EVSE Electromagnetic Emissions 22
7.1.1 EVSE Conducted Emissions 22
7.1.2 EVSE Radiated Emissions 22
7.2 EVSE Electromagnetic Immunity 22
7.3 EVSE Electrostatic Discharge 24
7.4 EVSE Harmonic Distortion Immunity 24
7.5 EVSE Electrical Fast Transient Immunity 24
7.6 EVSE Voltage Dips, Short Interruptions and Voltage Variations Immunity 24
7.7 EVSE Magnetic Field Immunity 24
7.8 EVSE Capacitor Switching Transient Test 24
7.9 EVSE Voltage Surge Test 24

7.10 Installation Requirements 25
7.11 General Product Standards 25
7.12 Personnel Protection System 25
7.13 AC Present Indicator 25
7.14 Conductor Cord Requirements 25
7.15 Coupler Requirements 25

8. COUPLER REQUIREMENTS 25
8.1 Vehicle Inlet/ Connector Compatibility 25
8.2 Ergonomic Requirements 25
8.2.1 Ease of Use 25
8.2.2 Indexing 25
8.2.3 Alignment 26
8.2.4 Tactile Feel 26
8.2.5 Latching 26
8.3 Safety Requirements 26
8.3.1 Isolation 26
8.3.2 Exposure of Contacts 26
8.3.3 Sharp Edges 26
8.3.4 Touch Temperature 26
8.3.5 Hazardous Conditions 26
8.3.6 Unauthorized Access 26
8.4 Performance Requirements 26
8.4.1 Design Life 27
8.4.2 Impact Resistance 27
8.4.3 Vehicle Drive-Over 27
8.5 Environmental Requirements 27
8.5.1 General Environmental Considerations 27
8.5.2 Temperature Range 27
8.5.3 Temperature Rise 27
8.5.4 Insulation Resistance 27
8.5.5 Fluid Resistance 27
8.5.6 Mechanical Requirements 27
8.5.7 Sealing Requirements 28
8.6 General Coupler Physical Description 28
8.6.1 Vehicle Inlet General requirements 28
8.6.2 Connector General Requirements 29
8.7 Dimensional Requirements 29
8.7.1 Interface Contacts Sizing 29
8.7.2 Vehicle Inlet Physical Dimensions 29
8.7.3 Connector Physical Dimensions 29
8.7.4 Vehicle Inlet Access Zone 29
8.7.5 Contact Sequencing 29

9. CHARGE STATUS INDICATOR 30

10. CONNECTOR / VEHICLE INLET OPTIONAL MARKING 30

11. NOTES 30
11.1 Marginal Indicia 30

APPENDIX A HISTORY EVSE/VEHICLE INTERFACE 31
APPENDIX B AC LEVEL 3 CHARGING 34
APPENDIX C PREVIOUS CHARGE COUPLER DESIGNS 37
APPENDIX D CHARGE COUPLER DIMENSIONAL REQUIREMENTS (NON LOCKABLE) 43
APPENDIX E CHARGE COUPLER DIMENSIONAL REQUIREMENTS (LOCKABLE) 49

1. SCOPE

This SAE Recommended Practice covers the general physical, electrical, functional and performance requirements to facilitate conductive charging of EV/PHEV vehicles in North America. This document defines a common EV/PHEV and supply equipment vehicle conductive charging method including operational requirements and the functional and dimensional requirements for the vehicle inlet and mating connector.

2. REFERENCES

2.1 Applicable Publications

The following publications form a part of this specification to the extent specified herein. Unless otherwise indicated, the latest issue of SAE and other applicable publications shall apply.

2.1.1 SAE Publications

Available from SAE International, 400 Commonwealth Drive, Warrendale, PA 15096-0001, Tel: 877-606-7323 (inside USA and Canada) or 724-776-4970 (outside USA), www.sae.org.

SAE J1113-21 Electromagnetic Compatibility Measurement Procedure for Vehicle Components—Part 21: Immunity to Electromagnetic Fields, 30 MHz to 18 GHz, Absorber-Lined Chamber

SAE J1211 Handbook for Robustness Validation of Automotive Electrical/Electronic Modules

SAE J1850 Class B Data Communications Network Interface

SAE J2293-1 Energy Transfer System for Electric Vehicles—Part 1: Functional Requirements and System Architectures

SAE J2293-2 Energy Transfer System for Electric Vehicles—Part 2: Communication Requirements and Network Architecture

2.1.2 Canadian Standards Association Publication

Available from Canadian Standards Association, 170 Rexdale Boulevard, Rexdale, Ontario, Canada M9W 1R3, www.csa.ca.

Canadian Electrical Code Part 1, Section 86

2.1.3 Federal Communication Commission Publications

Available from the United States Government Printing Office, 732 North Capitol Street, NW, Washington, DC 20401, Tel: 202-512-1800, www.gpoaccess.gov/cfr/retrieve.html.

CFR 40 Code of Federal Regulations—Title 40, Part 600, Subchapter Q

CFR 47 Code of Federal Regulations—Title 47, Parts 15A, 15B, and 18C

2.1.4 International Electrotechnical Commission Publication

Available from International Electrotechnical Commission, 3, rue de Verambe, P.O. Box 131, 1211 Geneva 20, Switzerland, Tel: +41-22-919-02-11, www.iec.ch.

IEC Publications are also available from the American National Standards Institute, 25 West 43rd Street, New York, NY 10036-8002, Tel: 212-642-4900, www.ansi.org.

CISPR 12 Vehicles, boats and internal combustion engines—Radio disturbance characteristics—Limits and methods of measurement for the protection of off-board receivers

61000-4-6 Electromagnetic compatibility (EMC)—Part 4-6: Testing and measurement techniques—Immunity to conducted disturbances, induced by radiofrequency fields

2.1.5 International Standards Organization Publication

Available from International Organization for Standardization, 1 rue de Varembe, Case Postale 56, CH-1211 Geneva 20, Switzerland, Tel: +41-22-749-01-11, www.iso.org.

Also available from American National Standards Institute, 25 West 43rd Street, New York, NY 10036-8002, Tel: 212-642-4900, www.ansi.org.

ISO 11451-2 Road vehicles—Vehicle test methods for electrical disturbances from narrowband radiated electromagnetic energy—Part 2: Off-vehicle radiation sources

2.1.6 National Fire Protection Association Publication

Available from the National Fire Protection Agency, 1 Batterymarch Park, Quincy, MA 02169-7471, Tel: 617-770-3000, www.nfpa.org.

National Electrical Code, NFPA 70 Article 625 (2008 edition)

2.1.7 Underwriters Laboratories Inc. Publications

Available from Underwriters Laboratories Inc., 333 Pfingsten Road, Northbrook, IL 60062-2096, Tel: 847-272-8800, www.ul.com.

UL 50 Standard for Enclosures for Electrical Equipment

UL 1439 Determination of Sharpness of Edges on Equipment

UL 2202 EV Charging System Equipment

UL 2231-1 Personnel Protection Systems for Electric Vehicle Supply Circuits: General Requirements

UL 2231-2 Personnel Protection Systems for Electric Vehicle Supply Circuits: Particular Requirements for Protection Devices for Use in Charging Systems

UL 2251 Plugs, Receptacles, and Couplers for Electric Vehicles

2.2 Related Publications

The following publications are provide for information purposes only and are not a required part of this document.

2.2.1 SAE Publications

Available from SAE International, 400 Commonwealth Drive, Warrendale, PA 15096-0001, Tel: 877-606-7323 (inside USA and Canada) or 724-776-4970 (outside USA), www.sae.org.

SAE J551-5 Performance Levels and Methods of Measurement of Magnetic and Electric Field Strength from Electric Vehicles, Broadband, 9 kHz to 30 MHz

SAE J1742 Connections for High Voltage On-Board Vehicle Electrical Wiring Harness—Test Methods and General Performance Requirements

SAE J1773 SAE Electric Vehicle Inductively Coupled Charging

SAE J1812 Function Performance Status Classification for EMC Immunity Testing

SAE J2178-1 Class B Data Communication Network Messages—Detailed Header Formats and Physical Address Assignments

SAE J2178-2 Class B Data Communication Network Messages—Part 2: Data Parameter Definitions

SAE J2178-3 Class B Data Communication Network Messages—Part 3: Frame IDs for Single-Byte Forms of Headers

SAE J2178-4 Class B Data Communication Network Messages—Message Definitions for Three Byte Headers

2.2.2 International Electrotechnical Commission Publications

Available from International Electrotechnical Commission, 3, rue de Verambe, P.O. Box 131, 1211 Geneva 20, Switzerland, Tel: +41-22-919-02-11, www.iec.ch.

IEC Publications are also available from the American National Standards Institute, 25 West 43rd Street, New York, NY 10036-8002, Tel: 212-642-4900, www.ansi.org.

61000-4-3 Electromagnetic compatibility (EMC)—Part 4-3: Testing and measurement techniques—Radiated, radio-frequency, electromagnetic field immunity test

IEC 61851-1 Electric Vehicle Conductive Charging System—Part 1: General Requirements

IEC 61851-21 Electric Vehicle Conductive Charging System—Part 21: Electric Vehicle Requirements for Connection to an AC / DC Supply

IEC 61851-22 Electric Vehicle Conductive Charging System—Part 22: AC Electric Vehicle Charging Station

2.2.3 Underwriters Laboratories Inc. Publications

Available from Underwriters Laboratories Inc., 333 Pfingsten Road, Northbrook, IL 60062-2096, Tel: 847-272-8800, www.ul.com.

UL 94 Tests for Flammability of Plastic Materials for Parts in Devices and Appliances

UL 231 Power Outlets

UL 746A Standard for Polymeric Materials—Short Term Property Evaluations

UL 840 Insulation Coordination Including Clearance and Creepage Distances for Electrical Equipment

UL 2594 Outline of Investigation—Electric Vehicle Supply Equipment

3. DEFINITIONS

3.1 AC Level 1 Charging

A method that allows an EV/PHEV to be connected to the most common grounded electrical receptacles (NEMA 5-15R and NEMA 5-20R). The vehicle shall be fitted with an on-board charger capable of accepting energy from the existing single phase alternating current (AC) supply network. The maximum power supplied for AC Level 1 charging shall conform to the values in Table 1. A cord and plug EVSE with a NEMA 5-15P plug may be used with a NEMA 5-20R receptacle. A cord and plug EVSE with a NEMA 5-20P plug is not compatible with a NEMA 5-15R receptacle.

3.2 AC Level 2 Charging

A method that uses dedicated AC EV/PHEV supply equipment in either private or public locations. The vehicle shall be fitted with an on-board charger capable of accepting energy from single phase alternating current (AC) electric vehicle supply equipment. The maximum power supplied for AC Level 2 charging shall conform to the values in Table 1.

3.3 Charger

An electrical device that converts alternating current energy to regulated direct current for replenishing the energy of an energy storage device (i.e., battery) and may also provide energy for operating other vehicle electrical systems.

3.4 Chassis Ground

The conductor used to connect the non-current carrying metal parts of the vehicle high voltage system to the equipment ground.

3.5 Conductive

Having the ability to transmit electricity through a physical path (conductor).

3.6 Connector (Charge)

A conductive device that by insertion into a vehicle inlet establishes an electrical connection to the electric vehicle for the purpose of transferring energy and exchanging information. This is part of the coupler.

3.7 Contact (Charge)

A conductive element in a connector that mates with a corresponding element in the vehicle inlet to provide an electrical path.

3.8 Control Pilot

An electrical signal that is sourced by the Electric Vehicle Supply Equipment (EVSE). Control Pilot is the primary control conductor and is connected to the equipment ground through control circuitry on the vehicle and performs the following functions:

a. Verifies that the vehicle is present and connected

b. Permits energization/de-energization of the supply

c. Transmits supply equipment current rating to the vehicle

d. Monitors the presence of the equipment ground

e. Establishes vehicle ventilation requirements

3.9 Coupler (Charge)

A mating vehicle inlet and connector set.

3.10 DC Charging

A method that uses dedicated direct current (DC) EV/PHEV supply equipment to provide energy from an appropriate off-board charger to the EV/PHEV in either private or public locations.

3.11 Electric Vehicle (EV)

An automotive type vehicle, intended for highway use, primarily powered by an electric motor that draws from a rechargeable energy storage device. For the purpose of this document the definition in the United States Code of Federal Regulations – Title 40, Part 600, Subchapter Q is used. Specifically, an automobile means:

a. Any four wheeled vehicle propelled by a combustion engine using on-board fuel or by an electric motor drawing current from a rechargeable storage battery or other portable energy devices (rechargeable using energy from a source off the vehicle such as residential electric service).

b. Which is manufactured primarily for use on public streets, roads, and highways.

c. Which is rated not more that 3855.6 kg (8500 lb), which has a curb weight of not more than 2721.6 kg (6000 lb), and which has a basic frontal area of not more than 4.18 m^2 (45 ft^2).

3.12 Electric Vehicle Supply Equipment (EVSE)

The conductors, including the ungrounded, grounded, and equipment grounding conductors, the electric vehicle connectors, attachment plugs, and all other fittings, devices, power outlets, or apparatuses installed specifically for the purpose of delivering energy from the premises wiring to the electric vehicle. Charging cords with NEMA 5-15P and NEMA 5-20P attachment plugs are considered EVSEs.

3.13 Equipment Ground (Grounding Conductor)

A conductor used to connect the non-current carrying metal parts of the EV/PHEV supply equipment to the system grounding conductor, the grounding electrode conductor, or both, at the service equipment.

3.14 EV/PHEV Charging System

The equipment required to condition and transfer energy from the constant frequency, constant voltage supply network to the direct current, variable voltage EV/PHEV traction battery bus for the purpose of charging the battery and/or operating vehicle electrical systems while connected.

3.15 Insulator

The portion of a charging system that provides for the separation, support, sealing, and protection from live parts.

3.16 Off-Board Charger

A charger located off of the vehicle.

3.17 On-Board Charger

A charger located on the vehicle.

3.18 Plug In Hybrid Electric Vehicle (PHEV)

A hybrid vehicle with the ability to store and use off-board electrical energy in a rechargeable energy storage device.

3.19 Vehicle Inlet (Charge)

The device on the electric vehicle into which the connector is inserted for the purpose of transferring energy and exchanging information. This is part of the coupler.

4. GENERAL CONDUCTIVE CHARGING SYSTEM DESCRIPTION

In the most fundamental sense, there are 3 functions, 2 electrical and 1 mechanical, that must be performed to allow charging of the EV/PHEV battery from the electric supply network. The electric supply network transmits alternating current electrical energy at various nominal voltages (rms) and a frequency of 60 Hz. The EV/PHEV battery is a DC device that operates at a varying voltage depending on the nominal battery voltage, state-of-charge, and charge/discharge rate. The first electrical function converts the AC to DC and is commonly referred to as rectification. The second electrical function is the control or regulation of the supply voltage to a level that permits a managed charge rate based on the battery charge acceptance characteristics – i.e., voltage, capacity, electrochemistry, and other parameters. The combination of these two functions are the embodiment of a charger. The mechanical function is the physical coupling or connecting of the EV/PHEV to the EVSE and is performed by the user. The conductive charging system consists of a charger and a coupler. The conductive system architecture is suitable for use with electrical ratings as specified in Table 1 and as shown in Figure 1.

TABLE 1 - CHARGE METHOD ELECTRICAL RATINGS (NORTH AMERICA)

Charge Method	Nominal Supply Voltage (Volts)	Maximum Current (Amps-continuous)	Branch Circuit Breaker rating (Amps)
AC Level 1	120 V AC, 1-phase	12 A	15 A (minimum)
	120 V AC, 1-phase	16 A	20 A
AC Level 2	208 to 240 V AC, 1-phase	≤ 80 A	Per NEC 625
DC Charging	Under Development		

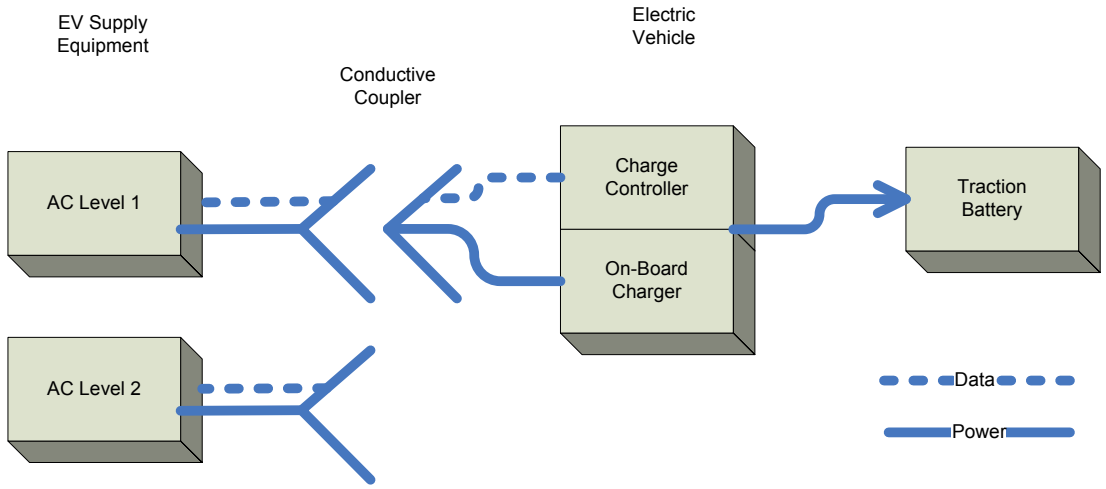

FIGURE 1 - CONDUCTIVE EV/PHEV CHARGING SYSTEM ARCHITECTURE

4.1 AC Level 1 and AC Level 2 Interface Functions

The conductive coupler consists of a connector/vehicle inlet set with electromechanical contacts imbedded in an insulator and contained within a housing for each of the mating parts. The contacts provide a physical connection at the vehicle interface for the power conductors, equipment grounding conductor, and control pilot conductor between the EV/PHEV and EVSE. In addition a proximity sense conductor is provided between the EV/PHEV and charge connector. The interface consists of 5 contacts that perform the interface functions as shown in Figure 2 and specified in Table 2.

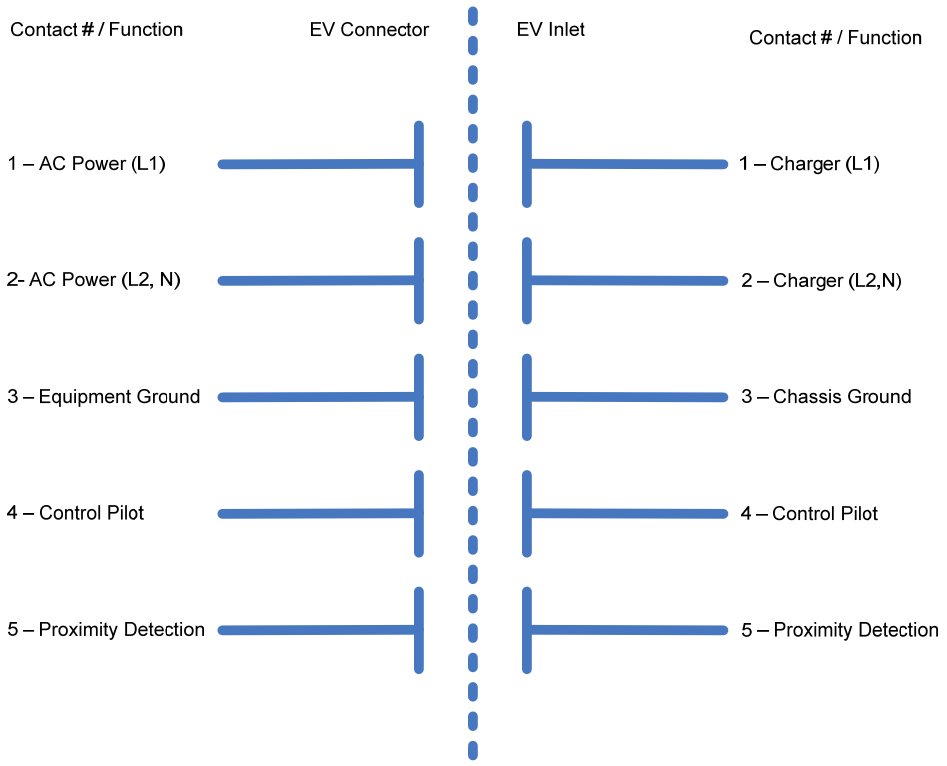

FIGURE 2 - AC LEVEL 1 AND AC LEVEL 2 CONDUCTIVE COUPLER CONTACT INTERFACE FUNCTIONS

TABLE 2 - AC LEVEL 1 AND AC LEVEL 2 CONDUCTIVE COUPLER CONTACT FUNCTIONS

Contact #	Connector Function	Vehicle Inlet Function	Description
1	AC Power (L1)	Charger 1	Power for AC Level 1 and 2
2	AC Power (L2,N)	Charger 2	Power for AC Level 1 and 2
3	Equipment ground	Chassis ground	Connect EVSE equipment grounding conductor to EV/PHEV chassis ground during charging
4	Control pilot	Control pilot	Primary control conductor (operation described in Section 5)
5	Proximity Detection	Proximity Detection	Allows vehicle to detect presence of charge connector

4.2 AC Level 1 Charging

A method of EV/PHEV charging that extends AC power from the most common grounded electrical receptacle to an on-board charger using an appropriate cord set, as shown in Figure 3 at the electrical ratings specified in Table 1. AC level 1 allows connection to existing electrical receptacles in compliance with the National Electrical Code - Article 625.

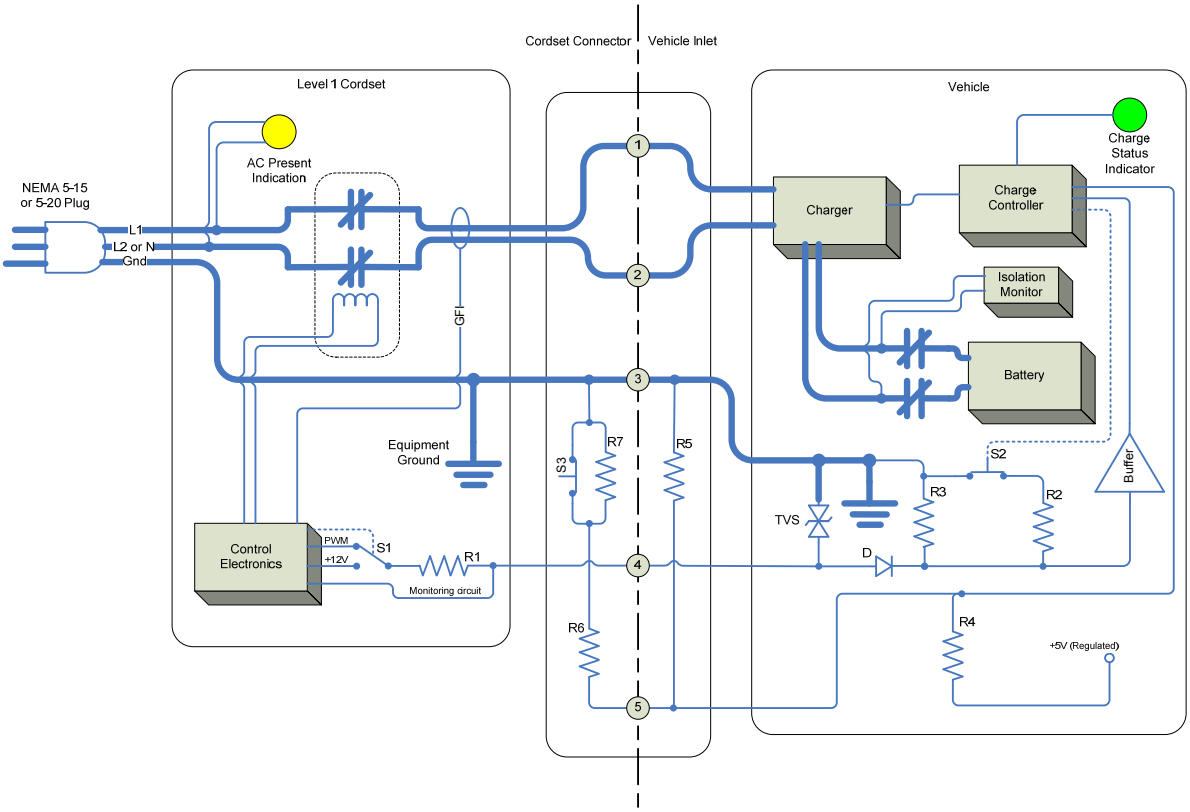

FIGURE 3 - AC LEVEL 1 SYSTEM CONFIGURATION
Figure Illustrates Vehicle Charging

4.3 AC Level 2 Charging

The primary method of EV/PHEV charging that extends AC power from the electric supply to an on-board charger from a dedicated EVSE as shown in Figure 4. The electrical ratings are similar to large household appliances and specified in Table 1. AC Level 2 may be utilized at home, workplace, and public charging facilities.

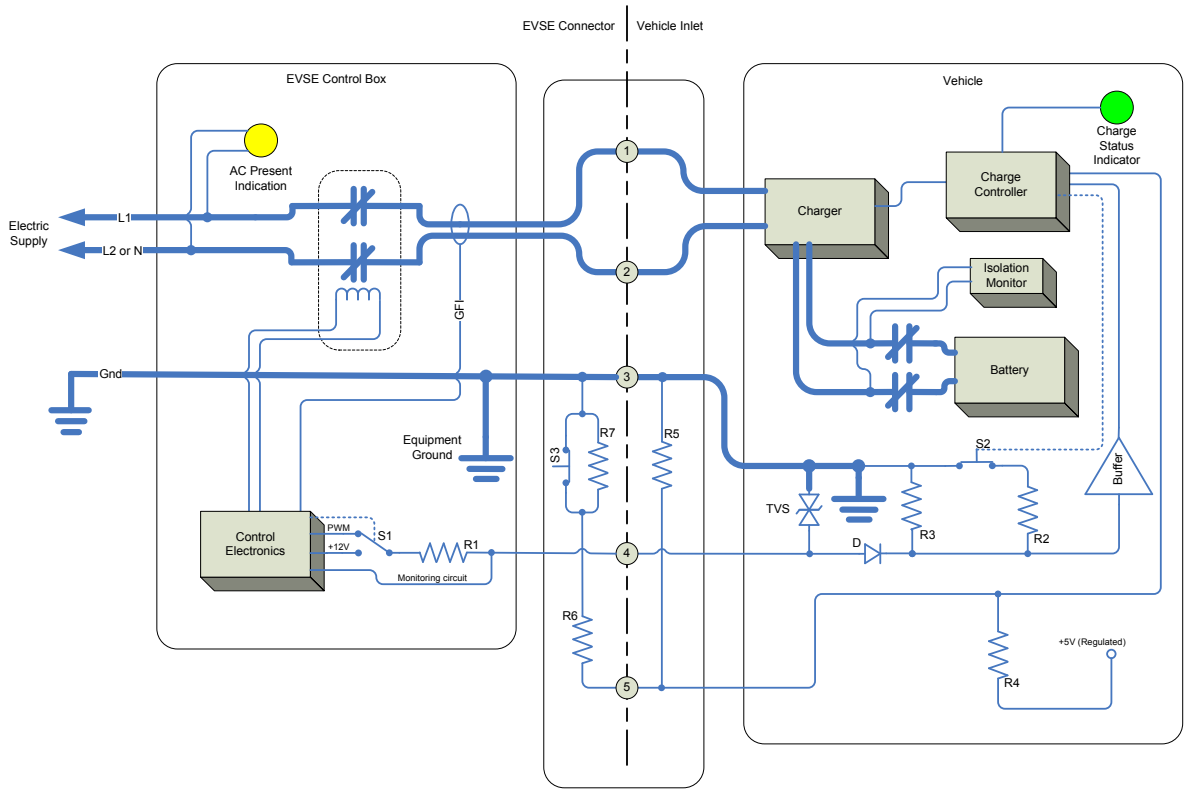

FIGURE 4 - AC LEVEL 2 SYSTEM CONFIGURATION
Figure Illustrates Vehicle Charging

4.4 DC Charging

Under development.

5. CONTROL AND DATA

The control pilot circuit is the primary control means to ensure proper operation when connecting an EV/PHEV to the EVSE. This section describes the functions and sequencing of events for this circuit based on the recommended typical implementation or equivalent circuit parameters.

5.1 Typical Control Pilot Circuit

A typical control pilot circuit is shown in Figure 5.

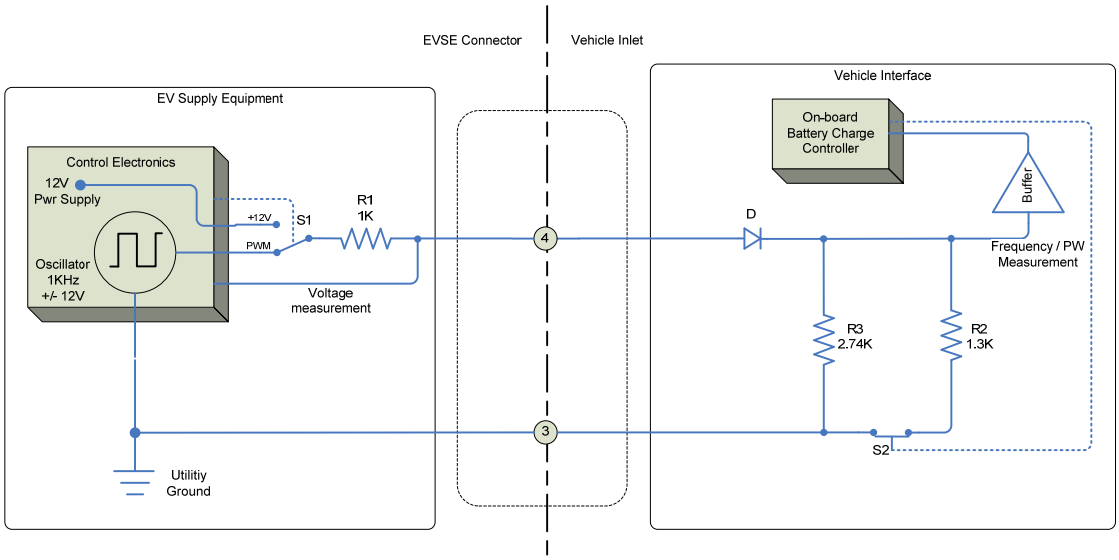

FIGURE 5 - TYPICAL CONTROL PILOT CIRCUIT

5.2 Equivalent Control Pilot Circuit

The equivalent control pilot circuit and vehicle states are shown in Figure 6 and defined in Table 3, Table 4, and Table 5.

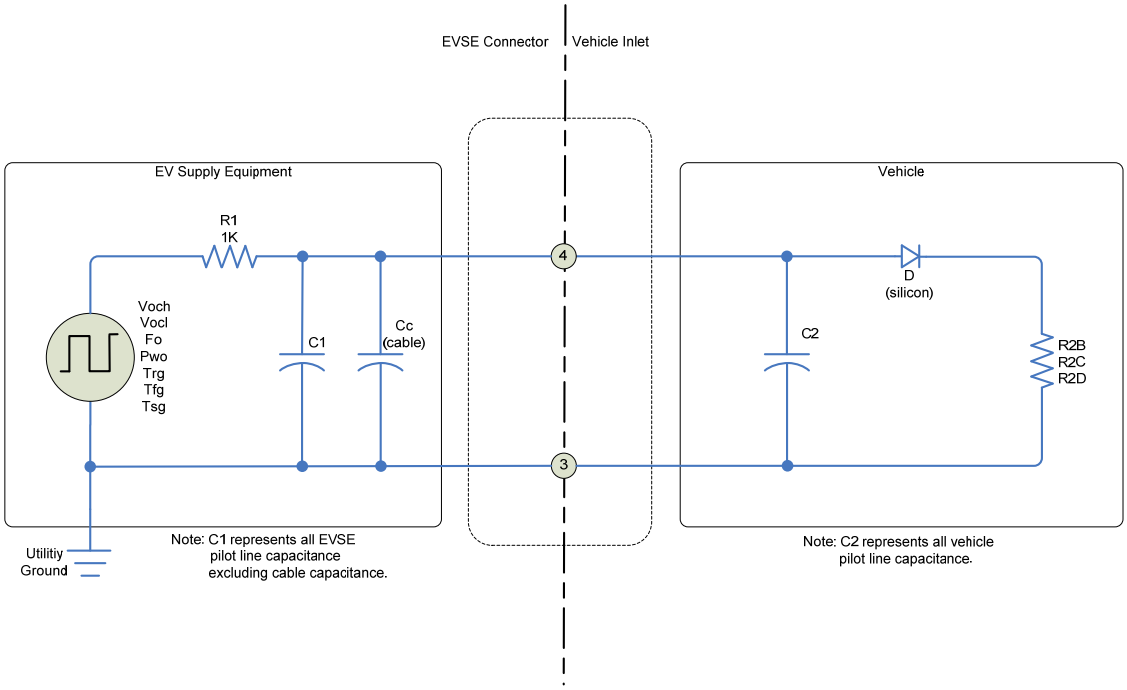

FIGURE 6 - CONTROL PILOT EQUIVALENT CIRCUIT

TABLE 3 - DEFINITION OF VEHICLE STATES

Vehicle State Designation	Voltage (vdc Nominal)	Description of Vehicle State
State A	12.0[1]	Vehicle not connected
State B	9.0[2][3]	Vehicle connected / not ready to accept energy
State C	6.0[2]	Vehicle connected / ready to accept energy / indoor charging area ventilation not required
State D	3.0[2]	Vehicle connected / ready to accept energy / indoor charging area ventilation required
State E	0	EVSE disconnected, utility power not available, or other EVSE problem
State F	–12.0[1]	EVSE not available, or other EVSE problem

1. Static voltage.
2. Positive portion of 1 KHz square wave, measured after transition has fully settled.
3. From a transition from State A to State B begins as a static DC voltage which transitions to PWM upon the EVSE detection of vehicle connected / not ready to accept energy.

TABLE 4 - EVSE CONTROL PILOT CIRCUIT PARAMETERS (SEE FIGURE 6)

Parameter[1]	Symbol	Units	Nominal Value	Maximum Value	Minimum Value
Generator					
voltage high, open circuit	Voch	Volts	12.00	12.60	11.40
voltage low, open circuit	Vocl	Volts	–12.00	–12.60	–11.40
Frequency	Fo	Hertz	1000	1020	980
pulse width[2]	Pwo	Microsec	Per Figure 7	Nom, + 25 µs	Nom, - 25 µs
rise time[3]	Trg	Microsec	n.a.	2	n.a.
fall time[3]	Tfg	Microsec	n.a.	2	n.a.
settling time[4]	Tsg	Microsec	n.a.	3	n.a.
Output Components					
equivalent source resistance	R1	Ohms	1000	1030[5]	970[5]
total equivalent EVSE capacitance, w/o cable	C1	Picofarads	n.a.	n.a.	300[6]
total equivalent EVSE capacitance, including cable	C1 + Cc	Picofarads	n.a.	3100	n.a.

1. Tolerances to be maintained over the environmental conditions and useful life as specified by the manufacturer.
2. Measured at 50% points of complete negative-to-positive or positive-to-negative transitions.
3. 10% to 90% of complete negative-to-positive transition or 90% to 10% of complete positive-to-negative transition measured between the pulse generator output and R1. Note that the term Generator is referring to the EVSE circuitry prior to and driving the 1KΩ source resistor with a ±12V square wave. This circuitry should have rise/fall times faster than 2 µsec. Rise/fall times slower than this will begin to add noticeably to the output rise/fall times dictated by the 1KΩ resistor and all capacitance on the Pilot line.
4. To 95% of steady-state value, measured from start of transition.
5. Maximum and minimum resistor values are ±3% about nominal.
6. Guarantees rise time slow enough to remove transmission line effects from cable.

TABLE 5 - EV/PHEV CONTROL PILOT CIRCUIT PARAMETERS (SEE FIGURE 6)

Parameter[1]	Symbol	Units	Nominal value	Maximum value	Minimum value
Equivalent load resistance – State B	R2B	Ohms	2740	2822[2]	2658[2]
Equivalent load resistance – State C[3]	R2C	Ohms	882	908[2]	856[2]
Equivalent load resistance – State D[4]	R2D	Ohms	246	253[2]	239[2]
Total equivalent capacitance	C2	picofarads	n.a.	2400	n.a.
Equivalent diode voltage drop[5]	Vd	Volts	0.70	0.85	0.55

1. Tolerances to be maintained over the environmental conditions and useful life as specified by the manufacturer.
2. Maximum and minimum resistor values are ±3% about nominal.
3. Vehicles not requiring ventilation for indoor charging areas.
4. Vehicles not requiring ventilation for indoor charging areas.
5. Silicon small signal diode, –40 °C to 85 °C, forward current 2.75 to 10.0 ma.

5.3 Control Pilot Functions

The control pilot performs the following functions.

5.3.1 Verification of Vehicle Connection

The EVSE is able to determine that the connector is inserted into the vehicle inlet and properly connected to the EV/PHEV by sensing resistance R3 as shown in Figures 3, 4, and 5. The diode, D1, is present to help an EVSE determine that an EV/PHEV is connected rather than other potential low impedance loads.

5.3.2 EVSE Ready to Supply Energy

The EVSE is able to indicate to the EV/PHEV that it is ready to supply energy by turning on the oscillator and providing the square wave signal specified in Figure 7. The EVSE shall not close contactors unless the oscillator is on and valid per Figure 7. In each of the states specified in Table 3, the EVSE may supply the pilot as a DC signal or as an oscillating signal. However, normally the oscillator is only turned on in State B, State C, or State D. Oscillation in other states should only be transitory as specified in Table 8.

5.3.3 EV/PHEV Ready to Accept Energy

The EV/PHEV indicates that it is ready to accept energy from the EVSE by closing switch S2, as shown in Figures 3, 4, and 5, when the current profile on the control pilot oscillator is sensed. The EV/PHEV may de-energize the EVSE at any time by opening switch S2.

5.3.4 Determination of Indoor Ventilation

The EVSE is able to determine if the EV/PHEV requires indoor charging ventilation by sensing the voltage as specified in Table 3. If required, the EVSE will provide a signal to turn on the indoor charging area ventilation system according to National Electrical Code – Article 625.

5.3.5 EVSE Current Capacity

The EVSE communicates the maximum available continuous current capacity to the EV/PHEV by modulating the pilot duty cycle as described in Table 6A, Table 6B and shown in Figure 7.

The overall (EVSE and EV/PHEV) control pilot tolerance is not to exceed ±2%. This tolerance is distributed up to ±0.5% for the EVSE and up to 1.5% for the EV/PHEV. In the case of overlapping ranges, the valid state takes precedence over the error state.

Based on an overall tolerance of 2% duty cycle (see Table 6B):

5.3.5.1 If the EV/PHEV reads a duty cycle of 3-7%, the EV/PHEV shall interpret this as a valid digital communications command. See 5.5.

5.3.5.2 If the EV/PHEV reads a duty cycle between 8% and less than 10%, the EV/PHEV should interpret this as a valid 10% duty cycle.

5.3.5.3 If the EV reads a duty cycle less than or equal to 85.0% the EV/PHEV should base the current on the Amps = (% duty cycle) * 0.6 formula.

5.3.5.4 If the EV reads a duty cycle greater than 85.0%, the EV/PHEV should base the current on the Amps = (% duty cycle - 64) * 2.5 formula.

5.3.5.5 If the EV reads a duty cycle of 97%, it is recommended the EV/PHEV consider this as a valid 96% duty cycle.

TABLE 6A - EVSE NOMINAL CONTROL PILOT DUTY CYCLE

EVSE Nominal Duty Cycle	EVSE Commanded Maximum Current
Duty Cycle < 5%	Error state, no charging allowed
Duty Cycle = 5%	Indicates that digital communication is needed.
5% < Duty Cycle < 10%	Error state, no charging allowed
10% ≤ Duty Cycle ≤ 85%	Available current = (duty cycle %) x 0.6
85% < Duty Cycle ≤ 96%	Available current = (duty cycle % - 64) x 2.5
Duty Cycle > 96%	Error state, no charging allowed

TABLE 6B - VEHICLE CONTROL PILOT DUTY CYCLE INTERPRETATION
BASED ON ±2% OVERALL TOLERANCE

Vehicle Duty Cycle Interpretation	Maximum Current to be drawn by Vehicle
Duty Cycle < 3%	Error state, no charging allowed
3% ≤ Duty Cycle ≤ 7%	Indicates that digital communication is needed
7% < Duty Cycle < 8%	Error state, no charging allowed
8% ≤ Duty Cycle < 10%	6A
10% ≤ Duty Cycle ≤ 85%	Available current = (duty cycle %) x 0.6
85% < Duty Cycle ≤ 96%	Available current = (duty cycle % - 64) x 2.5
96% < Duty Cycle ≤ 97%	80A
Duty Cycle > 97%	Error state, no charging allowed

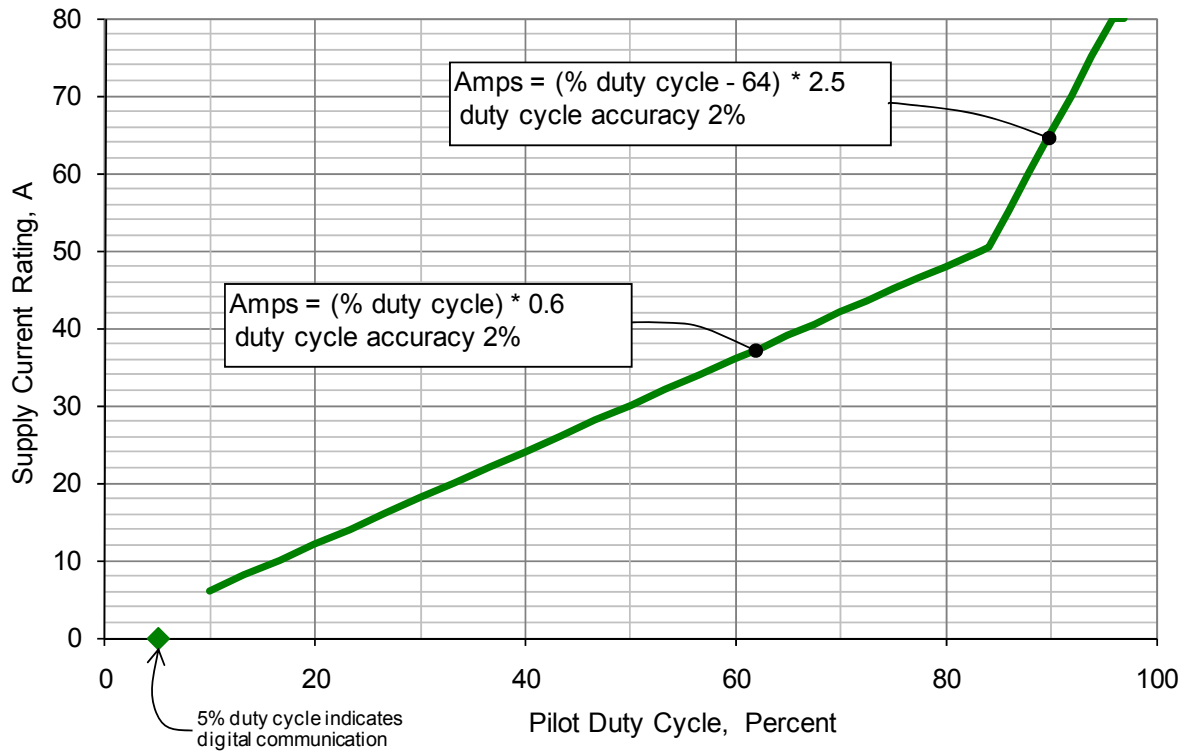

FIGURE 7 - SUPPLY CURRENT RATING VS. PILOT CIRCUIT DUTY CYCLE

As an example, a 20% duty cycle would be 20 x 0.6 = 12 A. In this case, the vehicle must adjust its current draw to a maximum of 12 A.

A duty cycle of 5% indicates that digital communication is needed, see 5.5.

The EVSE may accept an external signal to vary the duty cycle for supply or premises power limitations. The EV/PHEV vehicle shall use the duty cycle to control the on-board charger AC current drawn from the line.

5.3.6 Verification of Equipment Grounding Continuity

The equipment grounding conductor provides a return path for the control pilot current to insure that the EVSE equipment ground is safely connected to the EV/PHEV vehicle chassis ground during charging. Loss of this signal shall result in the automatic de-energization at the EVSE.

5.4 Proximity Detection

Upon insertion of the connector into the vehicle inlet, the coupler shall provide a means to detect the presence of the connector in the vehicle inlet as described in Table 7 and shown in Figure 8. Detection of the connector will occur at a point where damage to coupler, EV/PHEV, or EVSE could occur if the EV/PHEV were to be intentionally moved. Proximity detection may also provide a signal to activate the EV/PHEV charge controller and engage the EV/PHEV drive interlock system. EV/PHEV Proximity detection may also be used to provide a signal in the vehicle charge control strategy to help reduce electrical arcing of the coupler during disconnect. Resistors R5-R7 allow for diagnostics of the circuit. S3 is mechanically linked to the connector latch release actuator. S3 is normally closed at all times except when the connector latch release actuator is actuated to decouple the connector from the vehicle inlet. Opening of S3 should trigger the vehicle charge control to provide a controlled shutoff of charge power prior to disconnection. Refer to Table 8.

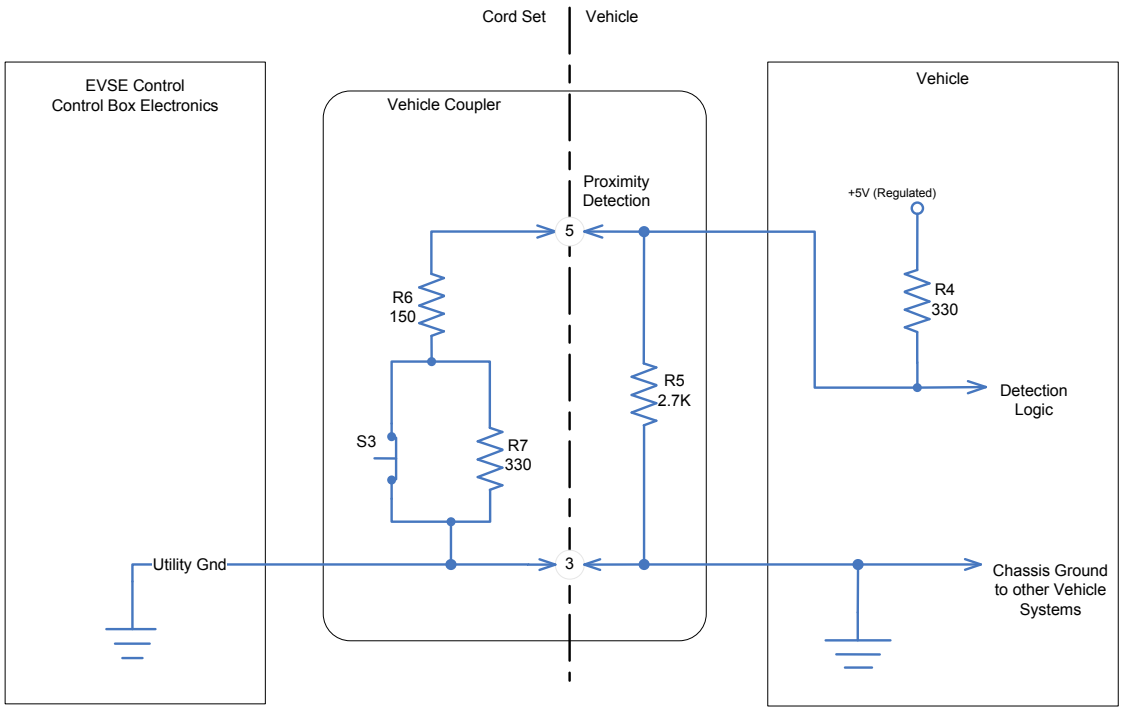

FIGURE 8 - TYPICAL PROXIMITY DETECTION CIRCUIT

TABLE 7 - PROXIMITY DETECTION CIRCUIT PARAMETERS (SEE FIGURE 8)

Parameter(1)	Symbol	Units	Nominal value	Maximum value	Minimum value
Equivalent load resistance	R4	Ohms	330	363(2)	297(2)
Equivalent load resistance	R5	Ohms	2700	2970(2)	2430(2)
Equivalent load resistance	R6	Ohms	150	165(2)	135(2)
Equivalent load resistance	R7	Ohms	330	363(2)	297(2)

1. Tolerances to be maintained over the environmental conditions and useful life as specified by the manufacturer.
2. Maximum and minimum resistor values are ±10% about nominal.

5.5 Digital Data Transfer

A duty cycle of 5% indicates that digital communication is required and must be established between the EVSE and vehicle before charging. This is required for DC charging. Digital communication is optional at any valid control pilot duty cycle for AC Level 1 & 2 charging. When optionally used with AC Level 1 & 2 charging, more functions may be accommodated than by Control Pilot duty cycle functionality alone. Digital data transfer is currently under development.

TABLE 8 - EVSE AND EV/PHEV RESPONSE TIME SPECIFICATIONS

Transition	Initial Condition(1)(2)(3)	New Condition	EVSE Response Time	EV/PHEV Response Time	Specification or Condition
1	State = x OSC = off	State = x OSC = on	no maximum		delay until pilot oscillator will be turned on by EVSE
2	State = x OSC = x	State = A OSC = x	100 ms maximum		delay from disconnect until the contactor opens and terminates AC energy transfer
3	State = x OSC = x	State = E or State = F OSC = x		5 seconds maximum	delay until EV/PHEV opens battery isolation contactor
4	State = x OSC = on	State = A OSC = off	2 seconds maximum		delay until oscillator turned off after EV/PHEV is disconnected
5	State = B OSC = on	State = C or State = D OSC = on	3 seconds maximum		delay until contactor closes and initiates AC energy transfer in response to S2 closed
6	State = C or State = D OSC = on	State = B OSC = on	3 seconds maximum		delay until contactor opens and terminates AC energy transfer in response to S2 opened
7	State = x OSC = x	State = A or State = E or State = F OSC = x		3 seconds maximum	in response to an invalid pilot the EV/PHEV enters a safe mode and if necessary opens S2 and terminates the AC energy transfer
8	State = x OSC = x	State = E or State = F OSC = x	3 seconds maximum		delay from EVSE setting invalid pilot until termination of AC energy transfer
9	State = B or State = C or State = D OSC = on	invalid pilot frequency		3 seconds maximum	in response to an invalid pilot frequency the EV/PHEV enters a safe mode and if necessary opens S2 and terminates the AC energy transfer
10	State = x OSC = x	external signal to EVSE	10 seconds maximum		delay from external load management signal until EVSE modifies pilot signal state, duty cycle or other required response
11	State = C or State = D OSC = on	change in pilot duty cycle		5 seconds Maximum	EV/PHEV modifies maximum current draw for on-board battery charger in response to pilot signal duty cycle modification
12	State = C OSC = on	State = D OSC = x	3 seconds Maximum		EVSE response to change of ventilation request
13	State = C or State = D S3 closed	State = C or State = D S3 open		100 ms maximum	EV/PHEV terminates charge due to Proximity circuit opening

1. Current State from Table 3 defining pilot voltage and vehicle state.
2. OSC = off for pilot oscillator turned off, OSC - on for pilot oscillator turned on.
3. x for state or oscillator indicates any condition or unknown condition.

NOTES (Note number corresponds to states listed above):

1. The pilot signal oscillation indicates that the EVSE is ready to supply energy. Regardless of the state transition, there is no guarantee that the EVSE will be ready to supply AC energy within a minimum time period.

2. The transition from any State to State A indicates the vehicle connector has been removed. For safety reasons, it is important to de-energize the connector.

3. The transition from any State to State E or State F is an indication that the connector has been removed or that the EVSE is not available. For safety reasons, it is important that the vehicle goes into a safe state.

4. After a transition from any State to State A, the EVSE should turn off the oscillator (S1). For the purpose of filtering and reasonable control response time, the EVSE will not turn off the oscillator immediately. The connector may be immediately reinserted into the vehicle, and the EV/PHEV could see State C or State D with the oscillator turned on and no AC energy transfer for the listed maximum time before the oscillator is turned off.

5. After the vehicle closes S2 in order to request AC energy transfer, the vehicle can expect the contactor to close within a specified time period.

6. After the vehicle opens S2, in order to stop requesting AC energy transfer, it can expect the contactor to open within a specified time period.

7. The vehicle must respond to the pilot signal voltages. In this case, the EVSE may be experiencing a power outage, ground fault, or other condition that requires termination of the AC energy transfer mode. The vehicle should respond by opening the S2 and entering a safe mode.

8. If the EVSE is experiencing a condition that requires termination of the AC energy transfer mode, the EVSE must open the contactor in less than 3 seconds from setting the pilot signal to a state that prevents the EVSE contactor from closing.

9. The vehicle must respond to a pilot signal frequency that is significantly out of tolerance. The frequency of the EVSE oscillator is used to verify connection to a compatible EVSE and proper operation of the EVSE. If the frequency is incorrect, the vehicle should respond by opening the S2 and entering a safe mode. The recommended tolerance is ±2%, 1020 Hz to 980 Hz.

10. It is common for EVSE equipment to support an input signal for the purpose of external load control (utility service interrupt signal, etc.). This input is used for various purposes including off peak charging support, utility load shedding, and building load management controllers. A maximum response time must be specified to guarantee universal compatibility with the external controlling equipment.

11. The EVSE may modify the pilot signal duty cycle at any time, commanding the EV/PHEV to increase or decrease the maximum AC current draw. The vehicle must adhere to the maximum response time in order guarantee universal compatibility with the external controlling equipment. (See Table 8, Transition 10)

12. The EVSE should respond to ventilation state changes of the control pilot.

13. Switch S3 opens when the connector latch lever is actuated. This opens the Proximity Circuit. The EV/PHEV should terminate charge prior to connector disconnect to prevent connector contact arc damage. Charge resumption after S3 closing is OEM specific.

5.6 Typical Start Up Sequence

The charge process shall commence sequentially according to the following steps as the connector is inserted into the vehicle inlet:

a. The control pilot activates the EV/PHEV charge controller, the proximity detection activates the drive interlock.

b. Verification of EV/PHEV connection is detected by EVSE, by detecting a change from State A to State B. During this state change the oscillator is off. See switch S1.

c. EVSE indicates that it is ready to supply energy by turning on the oscillator and supplying square wave pilot signal to the EV/PHEV, State B. See switch S1.

d. EV/PHEV indicates that it is ready to accept energy from the EVSE by closing switch S2 and providing vehicle ventilation information to the EVSE, State C or State D.

e. The EVSE determines that the equipment grounding conductor to the EV/PHEV chassis ground is in place by detecting the high side of Pilot being in state B, C, or D, while the low side being at –12V.

f. The EVSE determines that the EV/PHEV pilot control circuitry is correctly configured by verifying the presence of the diode. The low side of the pilot pulse must be within the range specified in Table 4.

g. The EVSE determines if indoor area ventilation is required or not. If indoor charging area ventilation is not required then proceed to the next step. If indoor charging area ventilation is required then 3 conditions can exist with corresponding EVSE responses. They are:

   a. Condition 1 – If the EVSE is listed for indoor charging of all vehicles, turn on the indoor area ventilation system and proceed to the next step.

   b. Condition 2 – If the EVSE is listed for outdoor charging of all vehicles, proceed to the next step

   c. Condition 3 – If the EVSE is listed for vehicles not requiring indoor charging area ventilation, terminate the process and do not allow energization

h. The EV/PHEV vehicle determines the nature of and available current from the EVSE according to 1 of the following 3 conditions by measuring the duty cycle of the signal and proceeding as follows (see 5.3.5.1 – 5.3.5.5 and Table 6B):

   a. If the pilot duty cycle is between 10% and 96%, calculate available line current from the duty cycle and proceed to the next step.

   b. If the pilot duty cycle is between 3% and 7%, calculate available line current from the digital data link and proceed to the next step. See 5.5.

   c. If the digital data link cannot be established as described in 5.6.h.b, the process must be terminated and the fault condition displayed by the EVSE

i. The EVSE may now energize the system by closing the main power contactor and charging may commence at power levels up to rated maximum continuous current of the EVSE for continuous rated conditions, or up to the rating of the protective circuit breaker for non-continuous conditions, or up to the maximum rated current of the EVSE for DC charging as provided by the digital data link. A continuous load is defined as operating at a given level for more than 3 hours.

j. The pilot signal shall be monitored, and charge current adjusted accordingly, continuously during the charge process. If pilot signal is lost or the pulse width goes outside of the allowable range, the EVSE must terminate the charge process by opening the main contactor and turning off the pilot oscillator. The EVSE should also display the fault condition.

k. To terminate the charge process, turn the EVSE on/off switch to the off position and/or remove the connector from the vehicle inlet. See 5.4.

6. GENERAL EV/PHEV REQUIREMENTS

6.1 EV/PHEV Cable Ampacity Coordination

Vehicle cabling used for the AC Mains and Safety Ground should be coordinated with the supply input from the EVSE (known from the Control Pilot duty cycle). The following are examples of possible methods coordination may be achieved:

1. Sizing the cables for maximum EVSE supply input.

2. Provide circuit protection, such as fuses, for the cables.

3. Prohibit charge from an EVSE with supply input that exceeds the vehicle cable rating.

NOTE: A plug-in vehicle should be able to connect and charge from any EVSE. The maximum rating for 240V AC energy transfer is Level 2 which is 80A using a 100A premise circuit breaker. The design of the vehicle wiring from the charge connector to the charger needs to comprehend the full range of EVSE output.

6.2 Environmental

The on-board EV/PHEV charging system electronic components shall meet the requirements specified in SAE J1211 Handbook for Robustness Validation of Automotive Electrical/Electronic Modules.

7. GENERAL EVSE REQUIREMENTS

The following electromagnetic compatibility (EMC) paragraphs (7.1 thru 7.9) apply to the off-vehicle EVSE. SAE test methods for on-vehicle EV/PHEV charging equipment are under consideration.

7.1 EVSE Electromagnetic Emissions

The FCC Code of Federal Regulations – Title 47, Part 15 includes requirements for unintentional radiators and power line communication systems. The cordset and other EVSE external to the vehicle, if employing an internal frequency source exceeding 9 kHz, shall comply with FCC CFR47, Title 47, Parts 15A, 15B as a separate device.

NOTES:

1. Charging or support equipment used exclusively in vehicles may be formally exempted from FCC specific technical standards per paragraph 15.103, but FCC strongly recommends compliance to the FCC limits. The applicability of the FCC paragraph 15.103 exemption to specific devices is outside the scope of this document. The FCC Office of Engineering and Technology Laboratory Division Knowledge Database website provides up-to-date published interpretations of FCC rules.

2. An on-board Power Line Communication system may require separate FCC Part 15 compliance testing in a representative configuration, if the vehicle is so equipped. See FCC rules for composite systems incorporating carrier current communication systems.

3. Additionally, some markets may regulate EMC via the relevant sections of IEC 61851-21, “Electric Vehicle Charging Systems”. Specific market requirements are outside the scope of this document

7.1.1 EVSE Conducted Emissions

The EVSE shall meet FCC Part 15 conducted limits for unintentional radiators.

7.1.2 EVSE Radiated Emissions

The EVSE shall meet FCC Part 15 radiated limits for unintentional radiators. See 7.1, Note 1.

7.2 EVSE Electromagnetic Immunity

The EVSE shall be tested in accordance with and shall meet requirements for electromagnetic field immunity as specified in UL 2231-2. In addition to the performance requirements specified in UL 2231-2, the functions defined in Section 5 shall perform as designed during and after testing at the specified levels. Additional requirements may optionally be specified. See SAE J1812 for methods of specification of test levels and function performance status.

NOTES:

1. The UL 2231-2 standard specifies radiated immunity testing from 150 kHz to 1000 MHz, using IEC 1000-4-3. To avoid technical issues with the application of the IEC standard below its specified lower frequency limit of 80 MHz, it is recommended that immunity testing below 80 MHz be performed in accordance with IEC 61000-4-6, using a 20 volt rms emf test severity level. From 80 to 1000 MHz, IEC 61000-4-3 is recommended with a 20 V/m carrier test severity level.

2. For developmental testing, use of the frequency step sizes specified in ISO 11452-1 will facilitate an efficient evaluation of product immunity.

The test setup for radiated immunity is shown in Figure 9. Additional details are as follows:

a. The test bench shall be covered with a ground plane, located 800 mm above the test site ground plane or absorber lined shield enclosure (ALSE) floor.

b. The back edge of the test bench ground plane shall be connected to the test site ground plane or ALSE floor or wall, using a series of straps. See SAE J1113-21 for bench grounding requirements.

c. The AC Receptacle or Level 2 EVSE (if applicable) shall be mounted on a dielectric support, 200 mm above the front edge of the bench ground plane.

d. Level 1 EVSE (if applicable) shall be positioned at a minimum height of 700 mm above the test site or ALSE ground plane and connected to the AC Receptacle with a cord having a maximum length of 305 mm.

e. The AC receptacle (or Level 1 EVSE) mains conductors shall be connected to a pair of 50 uH line impedance stabilization networks (LISNs), using conductors having a maximum length of 200 mm. The 50 Ohm LISN ports shall be terminated with 50 Ohm loads. The ground conductors from the AC receptacle and the incoming mains line shall connect to the test bench at a point near the LISN terminals on the EVSE side of the LISNs. See CISPR 16.1.2 for LISN specifications.

f. The cordset length shall be in accordance with NEC 625. Excluding the vertical section exposed to the test field, the remainder of the cordset shall lay on the floor in a non-inductive pattern (i.e., "zig-zag", not coiled).

g. A grounded plate shall be provided on the floor, for mounting of the vehicle charge coupler and vehicle electrical / electronic equipment necessary for operation of the EVSE. Representative RF loading of conductive coupler circuits shall be included.

h. The standard tolerance for radiated immunity test setup dimensions shall be 5%, unless otherwise specified.

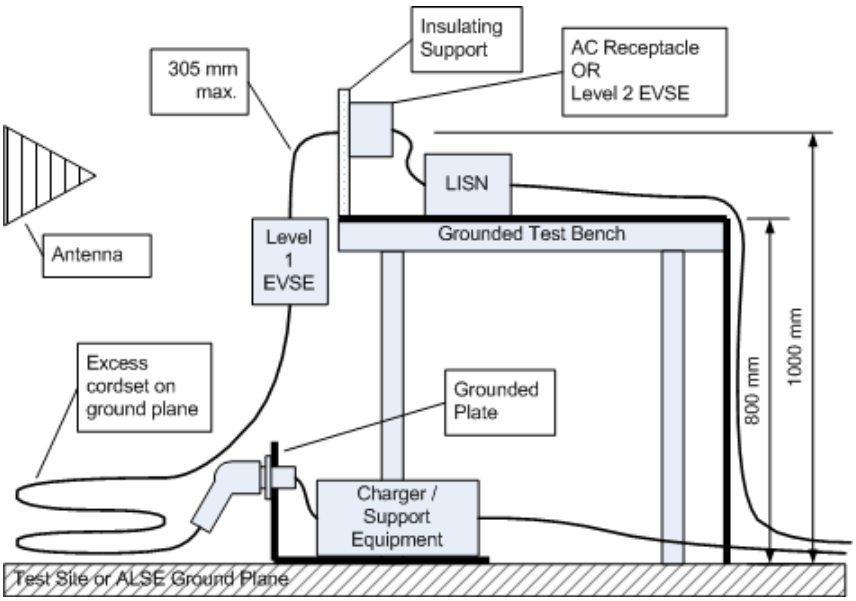

FIGURE 9 - RADIATED IMMUNITY TEST SETUP

7.3 EVSE Electrostatic Discharge

The EVSE shall be tested in accordance with and shall meet the requirements for electrostatic discharge specified in UL 2231-2.

7.4 EVSE Harmonic Distortion Immunity

The EVSE shall be tested in accordance with and shall meet the requirements for harmonic distortion immunity specified in UL 2231-2.

7.5 EVSE Electrical Fast Transient Immunity

The EVSE shall be tested in accordance with and shall meet the requirements for electrical fast transient immunity specified in UL 2231-2.

7.6 EVSE Voltage Dips, Short Interruptions and Voltage Variations Immunity

The EVSE shall be tested in accordance with and shall meet the requirements for voltage dips, short interruptions and voltage variations immunity specified in UL 2231-2.

7.7 EVSE Magnetic Field Immunity

The EVSE shall be tested in accordance with and shall meet the requirements for magnetic field immunity specified in UL 2231-2.

7.8 EVSE Capacitor Switching Transient Test

The EVSE shall be tested in accordance with and shall meet the capacitor switching transient test requirements specified in UL 2231-2.

7.9 EVSE Voltage Surge Test

The EVSE shall be tested in accordance with and shall meet the requirements for voltage surge specified in UL 2231-2.

7.10 Installation Requirements

The EVSE shall meet the requirements specified in the National Electrical Code – Article 625 and Canadian Electrical Code – Part 1, Section 86.

7.11 General Product Standards

The EVSE shall meet and be listed to the general product requirements specified in UL 2202 EV Charging System Equipment.

7.12 Personnel Protection System

The EVSE shall incorporate a listed system of personnel protection as specified in UL 2231 Personnel Protection Systems for EV Charging Circuits.

7.13 AC Present Indicator

The EVSE shall incorporate a feature that indicates that the EVSE is receiving AC input power. The specific requirements for this indicator (such as color, lamp type, intensity, field of view, etc) can be defined by the EVSE manufacturer. The indicator should be labeled as to its function and when illuminated the indicator would signal presence of AC electrical energy from the premise wiring. See Section 9 for additional information.

7.14 Conductor Cord Requirements

The conductor cord shall meet the requirements specified in the National Electrical Code – Articles 625 and Article 400 – Table 400-4, and UL 2202 EV Charging System Equipment.

7.15 Coupler Requirements

The EV/PHEV coupler shall meet the requirements specified in the National Electrical Code – Articles 625, UL 2251 Plugs, Receptacles, and Couplers for Electric Vehicles, and Section 8 of this document.

8. COUPLER REQUIREMENTS

8.1 Vehicle Inlet/ Connector Compatibility

The vehicle inlet designs shall be of a common physical configuration that is capable of accepting common connector physical configurations for AC Level 1 and AC Level 2. Additionally, the physical requirements shall ensure compatibility of connectors and vehicle inlets manufactured by the same manufacturer at different points in time as well as different manufacturers of the mating connectors and vehicle inlets.

8.2 Ergonomic Requirements

The coupler shall comply with the following ergonomic requirements.

8.2.1 Ease of Use

During connection and disconnection, the human efforts required shall be ≤ 60 N at beginning of life. This amount of force is typically within the physical capabilities of the general adult population and persons with limited or restricted capabilities.

8.2.2 Indexing

During connection and disconnection, the insertion/removal of the connector and inlet shall be intuitively obvious and free of multiple orientations for AC Level 1 and AC Level 2 charging configurations.

8.2.3 Alignment

The vehicle inlet shall provide a lead-in feature for automatic alignment during insertion and removal of the connector.

8.2.4 Tactile Feel

The coupler shall incorporate a means to provide tactile and/or audible feedback to the user when fully engaged.

8.2.5 Latching

The coupler shall have a latching mechanism to prevent inadvertent or accidental decoupling. The latching mechanism should provide a means in the connector to open the proximity detection conductor (see 5.4) when disengaging from the vehicle inlet.

8.3 Safety Requirements

The coupler shall comply with the following safety requirements.

8.3.1 Isolation

The vehicle inlet power contacts shall be electrically isolated from battery voltages when the connector is removed from the vehicle inlet.

8.3.2 Exposure of Contacts

The vehicle inlet and connector shall be designed to prevent direct contact with live parts according to UL 2251 Plugs, Receptacles, and Couplers for Electric Vehicles.

8.3.3 Sharp Edges

The vehicle inlet and connector shall be free of sharp edges and potentially injurious protrusions per UL 1439 Determination of Sharpness of Edges on Equipment.

8.3.4 Touch Temperature

The maximum external touch temperature of the coupler shall not be greater than 60 °C when the ambient temperature is 40 °C. The design process shall take into consideration material types as specified in UL 2251 Plugs, Receptacles, and Couplers for Electric Vehicles.

8.3.5 Hazardous Conditions

The coupler should be designed to avoid or mitigate potentially hazardous conditions – fire, electric shock, or personnel injury.

8.3.6 Unauthorized Access

For unattended public access charging, the coupler may provide a means to engage an optional coupler locking mechanism to reduce the likelihood of tampering or unauthorized removal.

Dimensional requirements to implement an optional coupler locking mechanism may be found in Appendix E, sheets 1-3.

8.4 Performance Requirements

The coupler shall comply with the following performance requirements

8.4.1 Design Life

The coupler shall be designed to a minimum of 10 000 cycles of mechanical operation. The coupler performance shall not be reduced by the environment conditions specified in 8.5 of this document.

8.4.2 Impact Resistance

The connector shall continue to function as intended after being dropped from a height of 1 m onto a concrete surface per UL 2251 Plugs, Receptacles, and Couplers for Electric Vehicles.

8.4.3 Vehicle Drive-Over

The connector shall continue to function as intended or fail in a safe manner after being driven over by a vehicle as specified in UL 2251 Plugs, Receptacles, and Couplers for Electric Vehicles.

8.5 Environmental Requirements

The coupler shall comply with the following environmental requirements:

8.5.1 General Environmental Considerations

The vehicle inlet should meet the performance requirements specified in 8.4 under weather and environmental conditions specified by the individual automobile manufacturers.

8.5.2 Temperature Range

The coupler shall be designed to withstand continuous ambient temperatures in the range of –30 °C to +50 °C during operation when supplied with the EVSE or installed in the EV/PHEV and continuous ambient temperatures in the range of –40 °C and +80 °C during shipping or storage when the components parts are assembled, supplied with the EVSE, or installed in the EV/PHEV.

8.5.3 Temperature Rise

The electrical contacts shall be designed for a maximum temperature rise of 50 °C above ambient at rated load. The wiring insulation shall be rated for 105 °C. For couplers rated less than 200 A, the load is to be applied continuously. For connectors rated 200 A or greater, the load is to be applied for 20 min followed by a no-load period of 10 min and repeated until peak temperatures stabilize.

8.5.4 Insulation Resistance

The insulation resistance of the coupler EV/PHEV shall be as specified in UL 2251 Plugs, Receptacles, and Couplers for Electric Vehicles.

8.5.5 Fluid Resistance

The coupler shall be unaffected by automotive lubricants, solvents, and fuels as specified in 4.4 Immersion and Splash of SAE J1211.

8.5.6 Mechanical Requirements

The vehicle inlet shall be able to withstand the minimum automotive vibration conditions when tested to the following procedures and pass/fail criteria:

a. Vibration Test Procedure—A vehicle inlet as mounted on a test fixture shall be securely bolted to the table of the vibration test machine and subjected to vibration according to the following test parameters:

1. Frequency—Varied from 10 to 55 Hz and return to 10 Hz at a linear sweep period of 2 min/complete sweep cycle.

2. Excursion—1.0 + 0.1/–0.0 mm peak to peak over the specified frequency range.

3. Direction of Vibration—Vertical axis of the vehicle inlet as it is mounted on the vehicle.

4. Test Duration—60 + 1/–0 min.

5. Pass/Fail Criteria—After completion of the test, there shall be no observed rotation, displacement, cracking or rupture of parts of the device that could result in failure to operate as intended or cause to fail any of the other test requirements specified in this document. Cracking or rupture of the parts of the device that affect mounting shall constitute a failure.

8.5.7 Sealing Requirements

The vehicle inlet shall be sealed in a manner that the following requirements are met:

a. When de-coupled, the vehicle inlet shall have an effective sealing system for outdoor use to provide a degree of protection against corrosion, windblown dust and rain, splashing water, hose-directed water, and external ice formation per UL 50, type 3S: Standard for Enclosures for Electrical Equipment as specified in UL 2251 Plugs, Receptacles, and Couplers for Electric Vehicles.

b. When coupled, the vehicle inlet shall have an effective sealing system for outdoor use to provide a degree of protection against corrosion, windblown dust and rain, splashing water, hose-directed water, and external ice formation per UL 50, type 3S: Standard for Enclosures for Electrical Equipment as specified in UL 2251 Plugs, Receptacles, and Couplers for Electric Vehicles.

c. The vehicle inlet shall provide for the egress of fluids.

8.6 General Coupler Physical Description

The vehicle inlet designs shall be of a common physical configuration that is capable of accepting common connector physical configurations for AC Level 1 and AC Level 2. Additionally, the physical requirements shall ensure compatibility of connectors and vehicle inlets manufactured by the same manufacturer at different points in time as well as different manufacturers of the mating connectors and vehicle inlets.

8.6.1 Vehicle Inlet General requirements

A standard configuration shall be capable of AC Level 1 and AC Level 2 charging. The contact requirements shall be as specified in Table 9.

TABLE 9 - VEHICLE INLET CONTACT REQUIREMENTS

Contact #	Function	Standard[1] – AC Level 1 and 2
1	Charger 1	X
2	Charger 2	X
3	Chassis ground	X
4	Control pilot	X
5	Proximity	X

1. Note: X = required, O = optional.

8.6.2 Connector General Requirements

The connector shall be fitted with a cord corresponding to its intended usage and shall meet the requirements specified in the National Electrical Code – Articles 625 and Article 400 – Table 400-4 for the power conductors, and UL 2251 - Plugs, Receptacles, and Couplers for Electric Vehicles, Table 15.1 for ground conductors and Table 10 for contacts.

TABLE 10 - CONNECTOR CONTACT REQUIREMENTS

Contact #	Function	Standard [1]– AC Level 1 and 2	DC Charging Under Development
1	AC Power	X	
2	AC Power	X	
3	Equipment ground	X	
4	Control pilot	X	
5	Proximity	X	

1. Note: X = required, O = optional.

8.7 Dimensional Requirements

The coupler shall be designed to comply with the key dimensional requirements as specified in this section.

8.7.1 Interface Contacts Sizing

The general contact sizes at the coupler interface shall comply with the dimensions as specified in Table 11.

TABLE 11 - CONTACT SIZE AND CURRENT RATING

Contact #	Function	Size (mm)	Current rating (Amps)	Voltage rating
1	AC Power	3.6 diameter	up to 80 A	300 vac
2	AC Power	3.6 diameter	up to 80 A	300 vac
3	Equipment/chassis ground	2.8 diameter	Fault rated	
4	Control pilot	1.5 diameter	2 A	30 vdc
5	Proximity	1.5 diameter	2 A	30 vdc

8.7.2 Vehicle Inlet Physical Dimensions

The vehicle inlet shall comply with the key physical dimensions as shown in Appendix D, sheet D-1.

8.7.3 Connector Physical Dimensions

The connector shall comply with the key physical dimensions as shown in Appendix D, sheet D-2.

8.7.4 Vehicle Inlet Access Zone

The vehicle inlet shall be installed in the vehicle to allow connector access when the cover door is opened as shown in Appendix D, sheets D-3 through D-5.

Dimensional requirements to implement an optional coupler locking mechanism may be found in Appendix E, sheets E-1 through E-3.

8.7.5 Contact Sequencing

During connection, the connector and vehicle inlet shall comply with the following contact sequencing; equipment/chassis ground contact is first make/last break and the control pilot contact is last make/first break.

9. CHARGE STATUS INDICATOR

The PHEV shall provide charge status information visible to the operator while inserting the coupler into the vehicle inlet. The specific requirements (such as color, lamp type, styling, intensity, field of view, etc) for the Charge Status Indicator can be defined by the vehicle manufacturer.

This indicator, as well as the AC Present Indicator on the EVSE (7.4) should be considered part of a diagnostic strategy that helps determine possible causes of no-charge events. This diagnostic strategy is optional for battery electric vehicles.

10. CONNECTOR / VEHICLE INLET OPTIONAL MARKING

A connector and/or vehicle inlet manufactured to this Recommend Practice may optionally visibly display the following identification on its outer surface in Arial font: “SAE J1772™”. Any party providing such identification warrants that the connector and/ or vehicle inlet complies with all mandatory requirements of this Recommend Practice and agrees to indemnify and hold SAE harmless from any and all liability arising out of any failure to comply and any resulting injury or damage arising from such failure.

11. NOTES

11.1 Marginal Indicia

A change bar (I) located in the left margin is for the convenience of the user in locating areas where technical revisions, not editorial changes, have been made to the previous issue of this document. An (R) symbol to the left of the document title indicates a complete revision of the document, including technical revisions. Change bars and (R) are not used in original publications, nor in documents that contain editorial changes only.

PREPARED BY THE SAE ELECTRIC VEHICLE AND PLUG-IN ELECTRIC VEHICLE CONDUCTIVE CHARGE COUPLER TASK FORCE AND THE SAE HYBRID COMMITTEE

APPENDIX A - HISTORY EVSE/VEHICLE INTERFACE

A.1 The specifications for the Control Pilot system shown in Section 5 of SAE J1772™ are purposely written to convey the most basic information needed to precisely define the system. However, the initial version of this system has been in use since 1997, and the experience gained by the industry may be of help to new manufacturers attempting to design equipment conforming to the SAE J1772™ Recommended Practice. This Appendix is a compilation of that experience, focused on the interface circuitry between the EVSE and the Vehicle.

Typical circuitry presently in use by Charging Station and Vehicle Manufacturers, is shown in basic form in Figure A1. Actual schematics cannot be shown due to proprietary considerations.

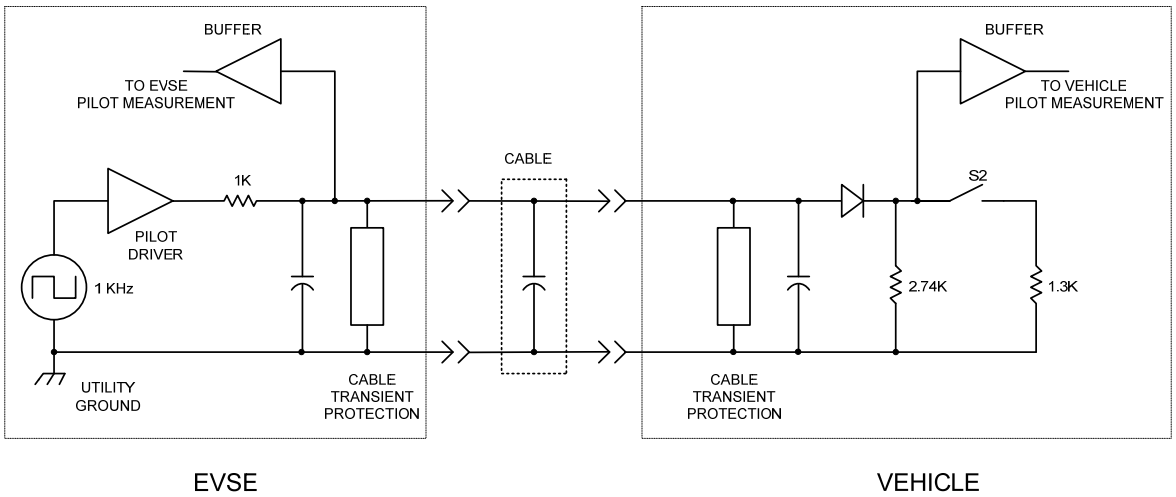

FIGURE A1 - TYPICAL PILOT LINE CIRCUITRY

A.1.1 Pilot Circuit Components

a. The op-amp shown as a driver is only indicative of the function, and is not intended to imply that this is a standard method of driving the Pilot line. The low output impedance of a typical op-amp makes the source resistance essentially the resistor itself. Although this may simplify the design, it does not mean that this is the only valid architecture. Other factors, such as susceptibility to cable transients, should also be considered in the design effort.

b. The two op-amps shown as buffers are meant to show a method of tapping off the Pilot line, for measurement purposes, in a manner that will not significantly affect the line waveform.

c. Switch S2 need not be a mechanical switch or relay. At least one vehicle manufacturer is successfully using an FET for this purpose.

d. The diode shown on the vehicle side is intended to be a common small signal silicon diode. Reverse voltage ratings of at least 100V are readily available and are recommended since this diode is exposed directly to cable transients.

e. The cable capacitance from the Pilot wire to the Ground wire will probably be around 25 pF per foot, and many cables are 15 to 20 feet long. If the EVSE's contactor closes when the line voltage is near a positive or negative peak, then the voltage on the contactor output can rise from 0 to 170 V in just a few nanoseconds. This fast, high-voltage transition can easily be coupled through the capacitance of the cable. In addition, with the contactor closed during charging, any transients such as might be generated by nearby industrial equipment or lightning strikes can be coupled through. It is highly recommended that transient protection be installed on both the EVSE output and the vehicle input.

A.1.2 Basic Communication Sequence

The most basic communication sequence between the EVSE and the Vehicle is presented below in terms of the nominal voltage levels involved.

a. The EVSE generates a static +12 V, waiting for connection to the Vehicle.

b. Upon connection, assuming that switch S2 is open, the 2.74K Ω resistor on the vehicle will pull the +12V down to +9V, as measured at the EVSE output. The EVSE will sense this and begin generating a +9V, –12V, 1KHz square wave. Because of the diode on the Vehicle, the negative portion will be at –12V. Note that, for standard AC Level I and AC Level 2 charging, the negative portion will always remain at –12V. This purpose of this feature is safety, to allow the EVSE to distinguish between a vehicle and the straight resistance of a curious child's fingers.

c. If the Vehicle requires AC energy transfer, it will close switch S2. Most often, this will switch a 1.3K Ω resistor in parallel with the 2.74K Ω resistor, for an effective total resistance of 882 Ω. This value will pull the positive portion of the square wave down to +6V. The EVSE will interpret this as a request for AC power and close the contactor.

   If a 270 Ω resistor is switched in, the positive portion of the square wave will be pulled down to +3V, informing the EVSE that the vehicle's battery is a type that emits hazardous gasses during charging, and requires an exhaust fan in enclosed areas. Unless the EVSE is equipped to verify that such a fan is running, it must not close the contactor. In practice, very few auto manufacturers have put such batteries in their vehicles due to liability issues, and virtually all are using the 1.3K Ω resistor value.

d. When the Vehicle no longer requires AC energy transfer, it will open S2 and the positive portion of the signal will go back up to +9V. The EVSE will open the contactor, removing power. The +9V, –12V square wave will remain until the cable is disconnected from the Vehicle, when it will again go back to the static +12V state.

A.1.3 Pilot Line Voltage Ranges

Table A1 is not intended to imply that the Control Pilot voltages must remain within the minimum and maximum voltages shown. Rather, given the voltages and component values, and their tolerances as specified in Section 5 of SAE J1772™, it shows the range of voltages that will be obtained on the Pilot line output, over a –40 °C to 85 °C temperature range. This includes a tolerance of 3% for resistors on both the EVSE and the vehicle, and includes temperature affects on the small signal silicon diode. The table also assumes low-resistance Pilot line and Ground connections through the cable and connections.

EVSE manufacturers must decide for themselves what voltage tolerances will be acceptable for each Pilot line state, keeping in mind that vehicle tolerances are also involved.

TABLE A1 - PILOT LINE VOLTAGE RANGES

	Minimum	Nominal	Maximum
Positive Voltage, State A	11.40	12.00	12.60
Positive Voltage, State B	8.36	9.00	9.56
Positive Voltage, State C	5.48	6.00	6.49
Positive Voltage, State D	2.62	3.00	3.25
Negative Voltage - States B, C, D, and F	-11.40	-12.00	-12.60

In the States B, C, and D, where a 1 KHz square wave is present with capacitance on the line, the voltages shown represent the fully-settled values (> 8RC) after a transition.

The +12V and –12V voltages will most likely be generated using generic 3-terminal regulators. The minimum and maximum voltages shown in Table A1 both indicate a 5% tolerance. However, in recent years the +12V regulators have become commonly and inexpensively available with tolerances of ±2% over line, load, and temperature variations. The -12V regulators are commonly available with ±4% tolerance. Use of these, or others that may have even tighter tolerance specifications, will give greater tolerance to other components, increasing the probability that system voltages will stay within the specifications over the life of the equipment.

Previously, SAE J1772™ specified the voltage range for each state, as shown in Table A2. Each state had a ±1V range, with 1V gaps between each range that were considered invalid voltages. This was intended to give each state a large tolerance leeway, and provide gaps between states for noise immunity.

TABLE A2 - ORIGINAL PILOT VOLTAGE SPECIFICATION
(REFERENCE)

Vehicle State	Measured Voltage
	13.0 V
State A	12.0 V - nominal
	11.0V
	Invalid
	10.0 V
State B	9.0 V - nominal
	8.0 V
	Invalid
	7.0 V
State C	6.0 V - nominal
	5.0 V
	Invalid
	4.0 V
State D	3.0 V - nominal
	2.0 V
	Invalid

These voltage ranges are no longer part of the SAE 1772™ Specification. EVSE manufacturers may still use these ranges, at their discretion, but they are no longer constrained to do so by the Recommend Practice. As shown in Table A1, in a properly functioning system where the voltages and component tolerances are within the Specification, the voltages obtained will be well within those in Table A2.

However, staying within the Specifications for the EVSE in Section 5 of SAE J1772™, it will be left to the EVSE designer to decide the general architecture they will use and what voltage tolerances they will allow in their equipment for each state. At the other end of the cable, the Vehicle Manufacturers must be sure the equivalent resistances for each state fall within the specifications.

The specifications for the EVSE in Table 4 of SAE J1772™ can be used by the Vehicle Manufacturers to fully test their end of the system by simulating the EVSE part of the interface. The same is true for EVSE manufacturers, who can simulate the vehicle part of the interface. Values of all parameters can be adjusted over their specified range, and the robustness of the system can be determined before committing to the manufacture of a particular design.

APPENDIX B - AC LEVEL 3 CHARGING

NOTE: AC LEVEL 3 CHARGING HAS NEVER BEEN IMPLEMENTED. THE FOLLOWING IS HISTORICAL INFORMATION FOR REFERENCE ONLY.

B.1 SCOPE

This appendix is intended to provide guidance to accommodate vehicles using an on-board charging system capable of accepting current in excess of 48 A AC.

B.1.1 System Description

The SAE J1772™ recommended conductive coupler provides for two sets of current-carrying conductors. Contacts 1 and 2 are designated for AC charging at 6 to 48 A line current; contacts 3 and 4 are designated for high-current charging at up to 400 A. DC Charging uses the high-current contacts exclusively while AC Level 2 and AC Level 1 charging use the low-current contacts exclusively. Improvements in onboard charging technology enable more powerful charging, but require more current than can be supplied by contacts 1 and 2. The high-power coupler contacts 3 and 4 may be used to supply AC Level 3 to compatible vehicles following the guidelines in this appendix.

Definition: AC Level 3 – A charging method that uses dedicated electric vehicle supply equipment in either private or public locations. The vehicle shall be fitted with an on-board charger capable of accepting energy from an AC supply network at a nominal voltage of 208 and 240 V AC and a maximum current of 400 A.

Table B1 compares the characteristics of electric vehicle charging modes. Note that AC Level 3 charging shares most characteristics with AC Level 2 charging because the charger is located in the vehicle.

TABLE B1 - CHARGING MODE CHARACTERISTICS

EVSE Type	EVSE Input	EVSE Output	EVSE Vehicle Control Method	Charger Location	Charger Location	Power Max.
AC Level 2	208-240 V AC	208-240 V AC	SAE J1772™ Pilot	Vehicle	Vehicle	11.5 kW
AC Level 3	208-240 V AC	208-240 V AC	SAE J1772™ Pilot	Vehicle	Vehicle	96 kW
DC Charging	208-600 V	0-600 V DC	SAE J1772™ and SAE J2293	EVSE	EVSE	240 kW

B.2 PILOT CIRCUIT

AC Level 3 charging interface is controlled by a pilot signal output from the Electric Vehicle Supply Equipment, similar to AC Level 2 charging. Characteristics of the EVSE are conveyed by the output (open circuit) voltage combination of the pilot signal. When plugged into an EVSE, a vehicle connects the pilot output to the supply ground through a resistor/diode combination, bringing the pilot test point voltages into the range of a valid response. If the EVSE detects a valid charge request, it adjusts the pilot duty cycle to convey the available a.c. line current, and then closes the appropriate contactor.

B.2.1 Electric Vehicle Supply Equipment Output Parameters

Table B2 defines pilot signal characteristics for AC Level 2, AC Level 3, and DC Charging EVSE. Note that an AC Level 3 EVSE can operate as an AC Level 2 EVSE if AC Level 3 charging is not requested. The AC Level 3 pilot signal duty cycle range corresponds to the duty cycle range for AC Level 2 charging but not DC Charging. Permissible supply resistance (on pilot oscillator output) is the same for all EVSE.

TABLE B2 - EVSE CONTROL PILOT PARAMETERS

EVSE Type	Output OCV (-)	Output OCV (+)	Duty Cycle Min.	Duty Cycle Max.	Oscillator Hz	Supply Resistance
AC Level 2	-12 V DC	+12 V DC	10%	80%	1000	1000 Ω
DC Charging	-12 V DC	+12 V DC	90%	90%	1000	1000 Ω
AC Level 3	-9 V DC(1)	+12 V DC	10%	80%	1000	1000 Ω

1. EVSE supporting Level 2 and High-power AC may transition to –12 V for Level 2 mode.

B.2.2 Vehicle Response Parameters

Electric vehicles respond to the pilot signal by applying a resistor/diode combination to complete the pilot circuit. The necessary equivalent resistance (diode plus resistor) values for valid responses are indicated in Table B3.

TABLE B3 - VEHICLE CHARGE REQUEST PARAMETERS

Charge Request	Pilot Voltage Test Point (–)	Pilot Voltage Test Point (+)	Vehicle Equiv. Resistance (–)	Vehicle Equiv. Resistance (+)
AC Level 2	–12 V DC	+6 V DC(1)	∞	1000 Ω(1)
DC Charging	–12 V DC	+9 V DC	N/A	3000 Ω
AC Level 2	–3 V DC	+9 V DC	500 Ω	3000 Ω

1. Confirmation is +3 V if ventilation is required, Req. = 333 Ω.

B.2.3 EVSE Response Parameters

The EVSE continuously monitors the filtered test point voltages. Test point voltages specified in Table B4 constitute valid responses. While the power contactor is being opened or closed, the EVSE may be configured to lower pilot duty cycle (current limit) to reduce wear on the power contacts.

TABLE B4 - EVSE RESPONSE PARAMETERS

EVSE Type	Vehicle Present Test Point (–)	Vehicle Present Test Point (+)	Charge Request Test Point (–)	Charge Request Test Point (+)
AC Level 2	–12 V DC	+9 V DC	–12 V DC	+6 V DC(1)
DC Charging	–12 V DC	+9 V DC	–12 V DC	+9 V DC
AC Level 3	–9 V DC	+9 V DC	–3 V DC	+9 V DC

1. Test point is +3 V if ventilation is required.

B.2.4 EVSE Current Limit Function

AC Level 2 and AC Level 3 EVSE use the pilot signal duty cycle to communicate available line current to the vehicle charger. The equations for these scales are indicated Table B5. The AC Level 3 charging scale enables the EVSE to limit current between 0 and 400 A, while the AC Level 2 scale enables control between 6 and 48 A. Examples of duty-cycle to line-limit correspondence are shown in Table B6.

TABLE B5 - CURRENT LIMIT EQUATION

Charging Mode	Duty Cycle Range	Current Limit, AC amperes
AC Level 2	5% < duty cycle <80%	I = 60 X (DUTY CYCLE)
AC Level 3	13% < duty cycle <80%	I = 600 X (DUTY CYCLE) – 80
AC Level 3	If duty cycle < 13%	I = 0

TABLE B6 - CURRENT LIMIT SCALE

Control Pilot Duty Cycle	Current Limit AC Level 2 (AC amps, cont.)	Current Limit ACLevel3 (AC amps, cont.)
10%	6	0
20%	12	40
30%	18	100
40%	24	160
50%	30	220
60%	36	280
70%	42	340
80%	48	400
90%	0—DC Charging Only	0—DC Charging Only

B.2.5 AC Charging Implementation

Vehicles and EVSE configured for AC Level 3 charging may also support AC Level 2 for greater compatibility. Figure B1 shows an EVSE/vehicle implementation of AC Level 3 charging. Note that the EVSE and EV are both configured to support AC Level 2 charging. The vehicle's low and high current charge port contacts are wired together to permit the on-board charger to operate from either low or high power sources. The EVSE uses 2 separate contactors to preclude parallel current paths while charging AC Level 3 vehicles. Vehicles could also be configured for DC Charging with the addition of a serial data interface and contactors between the high power contacts and the on-board charger and battery pack.

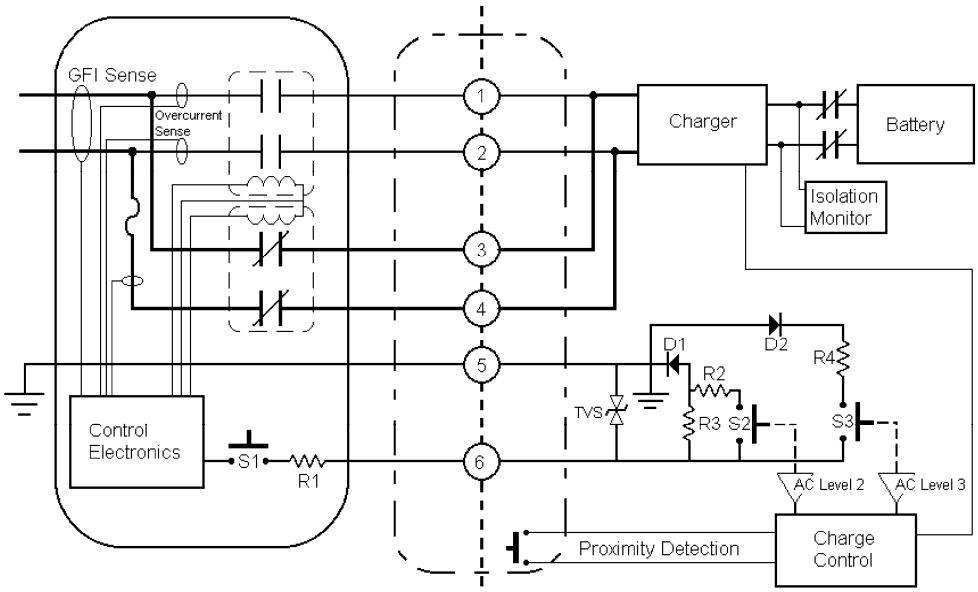

FIGURE B1 - AC LEVEL 3 AND AC LEVEL 2 SYSTEM CONFIGURATION

APPENDIX C - PREVIOUS CHARGE COUPLER DESIGNSSCOPE

This appendix provides information on the previous SAE J1772™ charge coupler.

C.2 GENERAL COUPLER PHYSICAL DESCRIPTION

The coupler interface shall be a single common configuration using pressure type contacts and shall be designed for interchangeability with devices of identical ratings and function.

C.2.1 Vehicle Inlet General requirements

There shall be a single vehicle inlet design with two configurations. The standard configuration shall be capable of AC Level 1 and AC Level 2 charging. The optional configuration shall be capable of AC Level 1, AC level 2, and DC Charging. The contact requirements shall be as specified in Table C1. The standard configuration shall not function with a connector suitable for DC Charging. The optional configuration shall function with all connector configurations.

TABLE C1 - VEHICLE INLET CONTACT REQUIREMENTS

Contact #	Function	Standard – AC Level 1 and 2[1]	Optional – AC Level 1 and 2 , DC Charging[1]
1	Charger 1	X	X
2	Charger 2	X	X
3	Battery positive		X
4	Battery negative		X
5	Chassis ground	X	X
6	Control pilot	X	X
7	Data negative	O	X
8	Data positive	O	X
9	Data ground	O	X

1. Note: X = required, O = optional.

C.2.2 Connector General Requirements

There shall be a single connector design with two configurations. The standard configuration shall be capable of AC Level 1 and AC Level 2 charging. The optional configuration shall be capable of DC Charging. The minimum contact requirements shall be as specified in Table C2. The connector shall be fitted with a cord corresponding to its intended usage and shall meet the requirements specified in the National Electrical Code, NFPA 70 – Articles 625 and Article 400 – Table 400-4.

TABLE C2 - CONNECTOR CONTACT REQUIREMENTS

Contact #	Function	Standard – AC Level 1 and 2[1]	Optional – DC Charging
1	AC Power	X	O
2	AC Power	X	O
3	DC Power		X
4	DC Power		X
5	Equipment ground	X	X
6	Control pilot	X	X
7	Data negative	O	X
8	Data positive	O	X
9	Data ground	O	X

1. Note: X = required, O = optional.

C.3 DIMENSIONAL REQUIREMENTS

The coupler shall be designed to comply with the key dimensional requirements as specified in this section.

C.3.1 Interface Contact Spacing

The general contact sizes and spacing at the coupler interface shall comply with the dimensions as specified in Table C3 and shown in Figure C1.

TABLE C3 - CONTACT SIZE AND CURRENT RATING

Contact #	Function	Size (mm)	Current Rating (Amps)	Voltage Rating	Dimension A (mm)	Dimension B (mm)
1	AC Power	4.6 diameter	40 A	300 vac	1.0	6.0
2	AC Power	4.6 diameter	40 A	300 vac	1.0	6.0
3	DC Power	15.0 x 8.0	400 A	600 vdc	2.0	6.0
4	DC Power	15.0 x 8.0	400 A	600 vdc	2.0	6.0
5	Equipment/chassis ground	8.0 diameter	Fault rated		1.0	6.0
6	Control pilot	3.1 diameter	15 A	60 vdc	1.0	5.0
7	Data negative	3.1 diameter	15 A	60 vdc	1.0	6.0
8	Data positive	3.1 diameter	15 A	60 vdc	1.0	6.0
9	Data ground	3.1 diameter	15 A	60 vdc	1.0	6.0

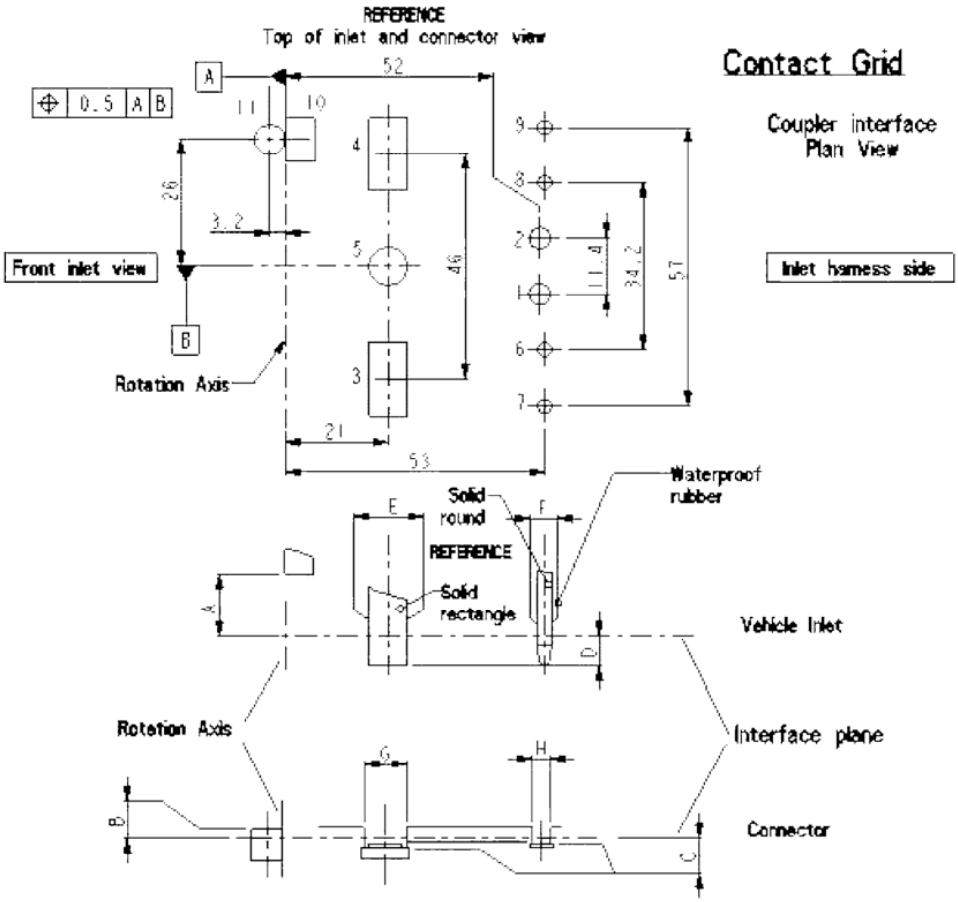

Pin Number	Designation	Size (mm)	Ampacity (A)	A±0.2 (mm)	B±0.2 (mm)	C±0.2 (mm)	D±0.2 (mm)	E±0.2 (mm)	F±0.2 (mm)	G±0.2 (mm)	H±0.2 (mm)
1	Low power AC (L,N)	Ø 4.6	40	-	-	1	6	-	8.5	-	6.5
2	Low power AC (L)	Ø 4.6	40	-	-	1	6	-	8.5	-	6.5
3	High Power	15 x 8	400	-	-	2	6	13	-	11	-
4	High Power	15 x 8	400	-	-	2	6	13	-	11	-
5	Equipt/Chassis ground	Ø 8	-	-	-	1	6	13	-	11	-
6	Control pilot	Ø 3.1	15	-	-	1	5	-	6.8	-	5.2
7	Communication (-)	Ø 3.1	15	-	-	1	6	-	6.8	-	5.2
8	Communication (+)	Ø 3.1	15	-	-	1	6	-	6.8	-	5.2
9	Communication (GRD)	Ø 3.1	15	-	-	1	6	-	6.8	-	5.2
10	Reed Switch *	9 x 6 x20	-	12.9	-	-	-	-	-	-	-
11	Magnetic Sensor *	Ø 6 x 6.3	Sw/T 5000 Gauss & 3 413 Gauss	-	1.8	-	-	-	-	-	-

* Reed minimum attractive distance to magnet : 17mm

FIGURE C1 - CONTACT INTERFACE SPACING AND CONTROL DIMENSIONS

C.3.2 Connector Physical Dimensions

The connector shall comply with the key physical dimensions as shown in Figure C2.

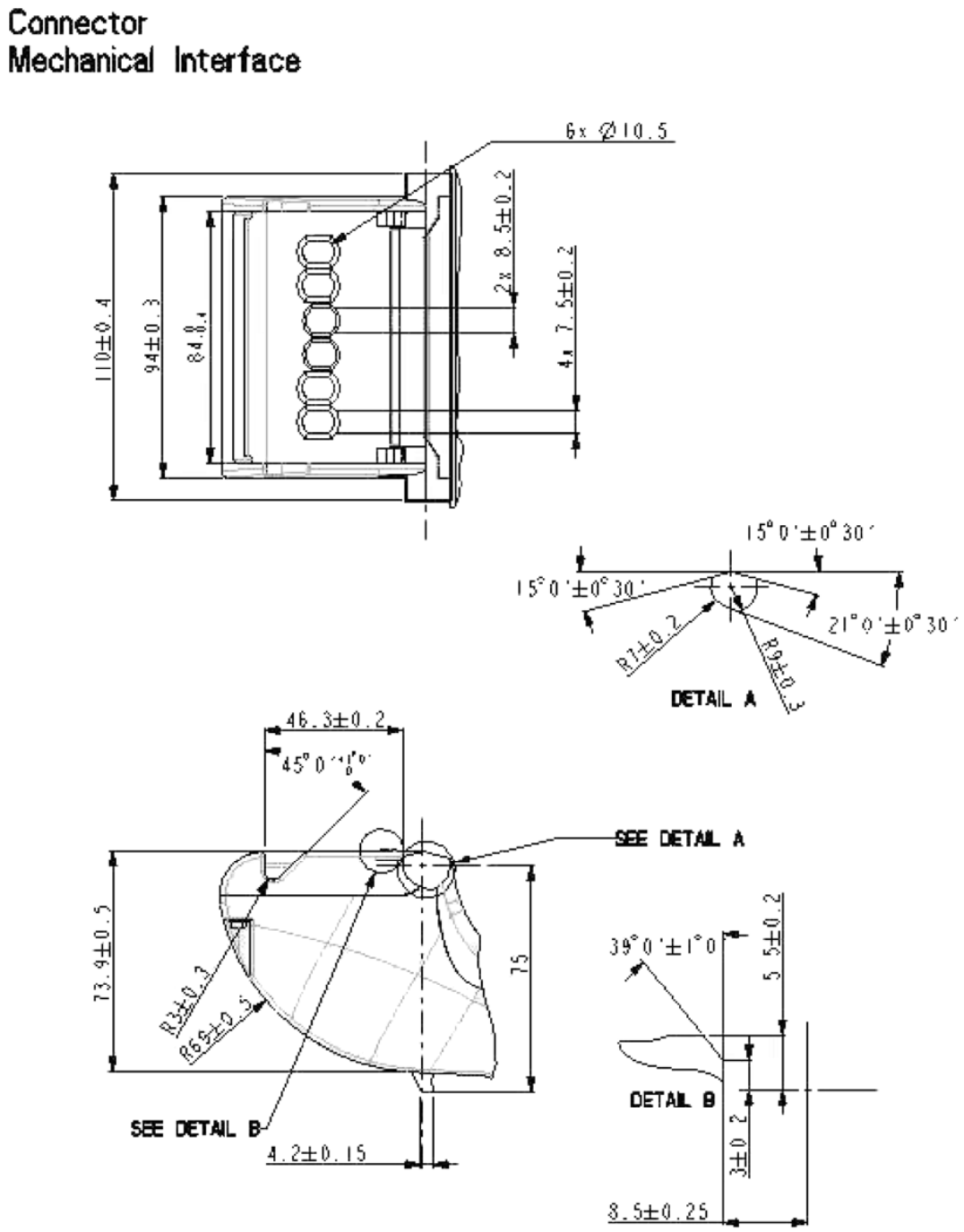

FIGURE C2 - CONNECTOR PHYSICAL CONTROL DIMENSIONS

C.3.3 Vehicle Inlet Physical Dimensions

The vehicle inlet shall comply with the key physical dimensions as shown in Figure C3.

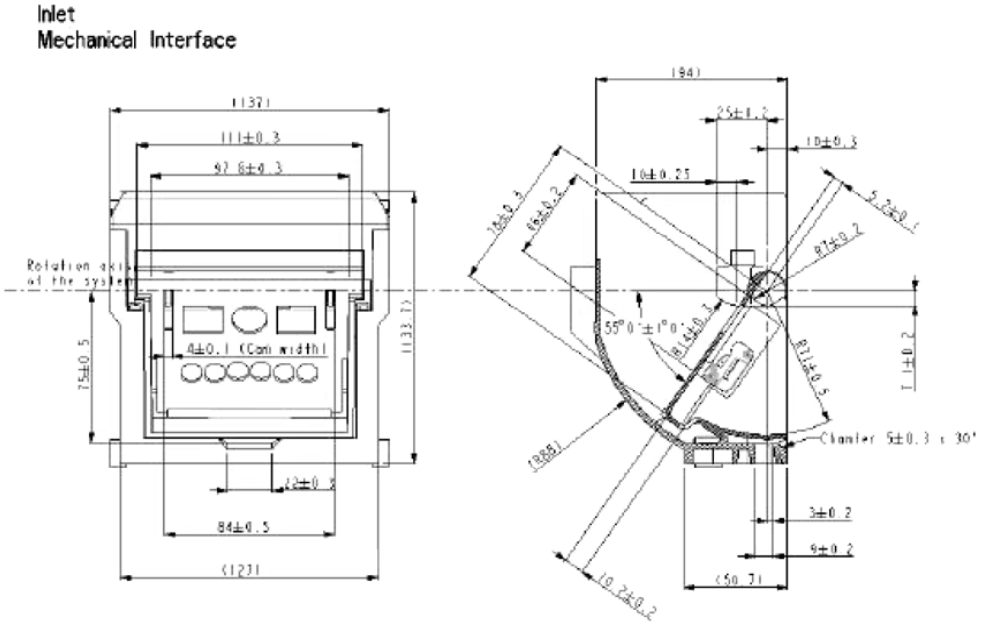

FIGURE C3 - VEHICLE INLET PHYSICAL CONTROL DIMENSIONS

C.3.4 Vehicle Inlet Access Zone

The vehicle inlet shall be installed in the vehicle to allow connector access when the cover door is opened as shown in Figure C4.

C.3.5 Contact Sequencing

During connection, the connector and vehicle inlet shall comply with the contact sequencing and events shown in Figure C5 and specified in Table C4. It should be noted that the equipment/chassis ground contact is first make/last break and the control pilot contact is last make/first break.

TABLE C4 - COUPLER INTERFACE CONTACT SEQUENCING EVENTS

Sequencing Event	AC Level 1 and 2 Angle A (degrees)	DC Charging Angle A (degrees)
Insertion zone	0 to –12	0 to –12
Line-to-line connector/inlet	0	0
Equipment-chassis ground	44.5	34.5
Power	49.5	43.0
Data	51.0	51.0
Control pilot	52.0	52.0
Latch point	55.0	55.0
Over travel	58.0	58.0

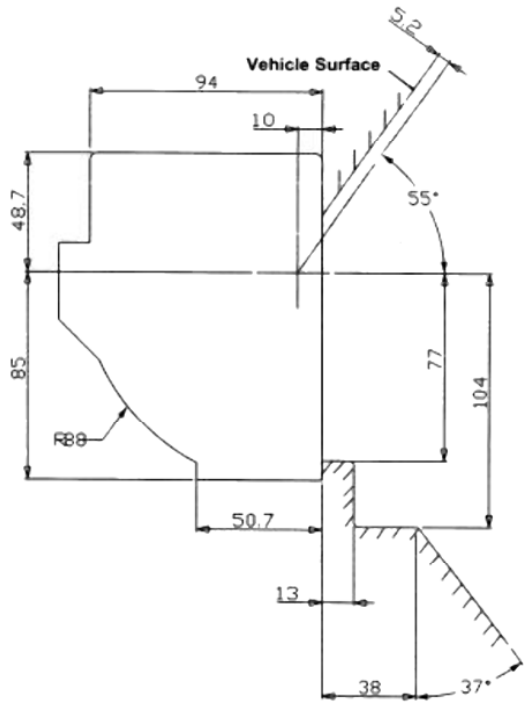

FIGURE C4 - VEHICLE INLET INTERFACE ACCESS ZONE

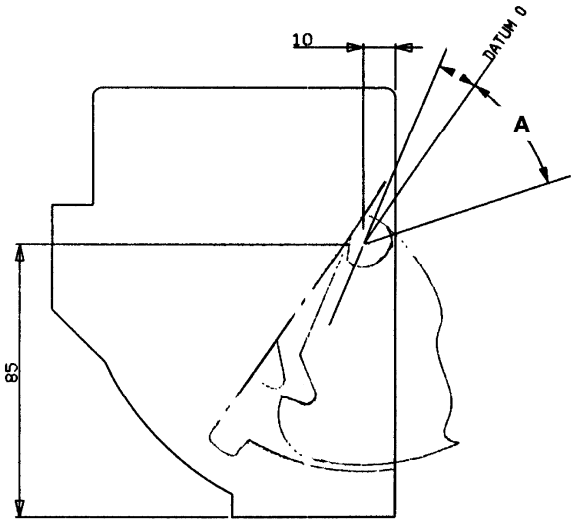

FIGURE C5 - COUPLER INTERFACE CONTACT SEQUENCING

APPENDIX D - CHARGE COUPLER DIMENSIONAL REQUIREMENTS (NON LOCKABLE)

D.1 SCOPE

This appendix provides dimensional requirements for a non lockable coupler vehicle inlet (sheet D-1), connector (sheet D-2) and vehicle inlet access zones (sheets D3-5). Dimensional requirements to implement an optional coupler locking mechanism may be found in Appendix E, sheets 1-3.

SHEET D-1
VEHICLE INLET

Third angle projection
Dimensions in millimeters
Value in parenthesis is for reference

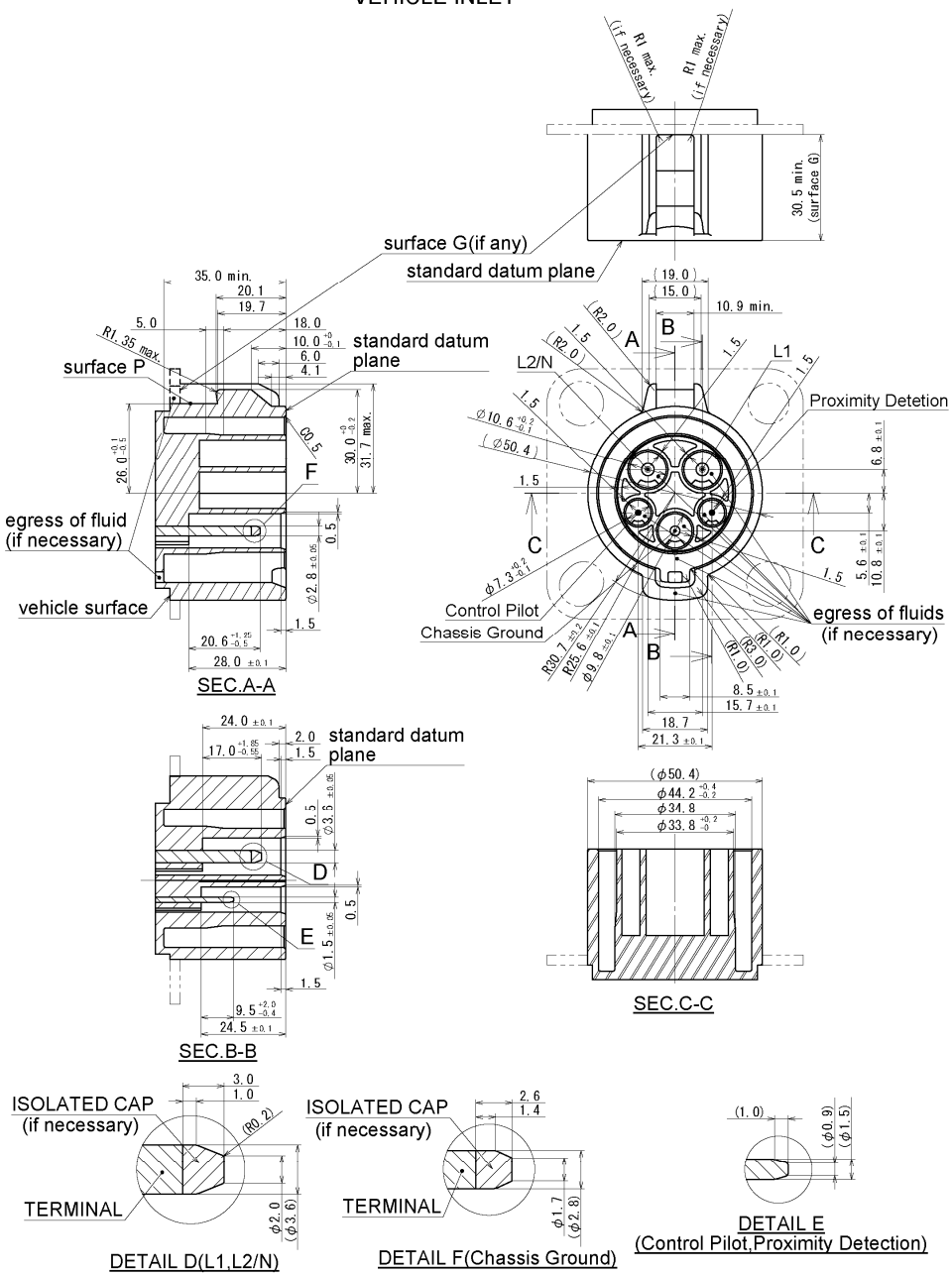

GENERAL TOLERANCE			
10MAX	50MAX	100MAX	ANGLE
±0.15	±0.2	±0.3	±30'

Third angle projection
Dimensions in millimeters
Value in parenthesis is for reference

SHEET D-2
VEHICLE CONNECTOR

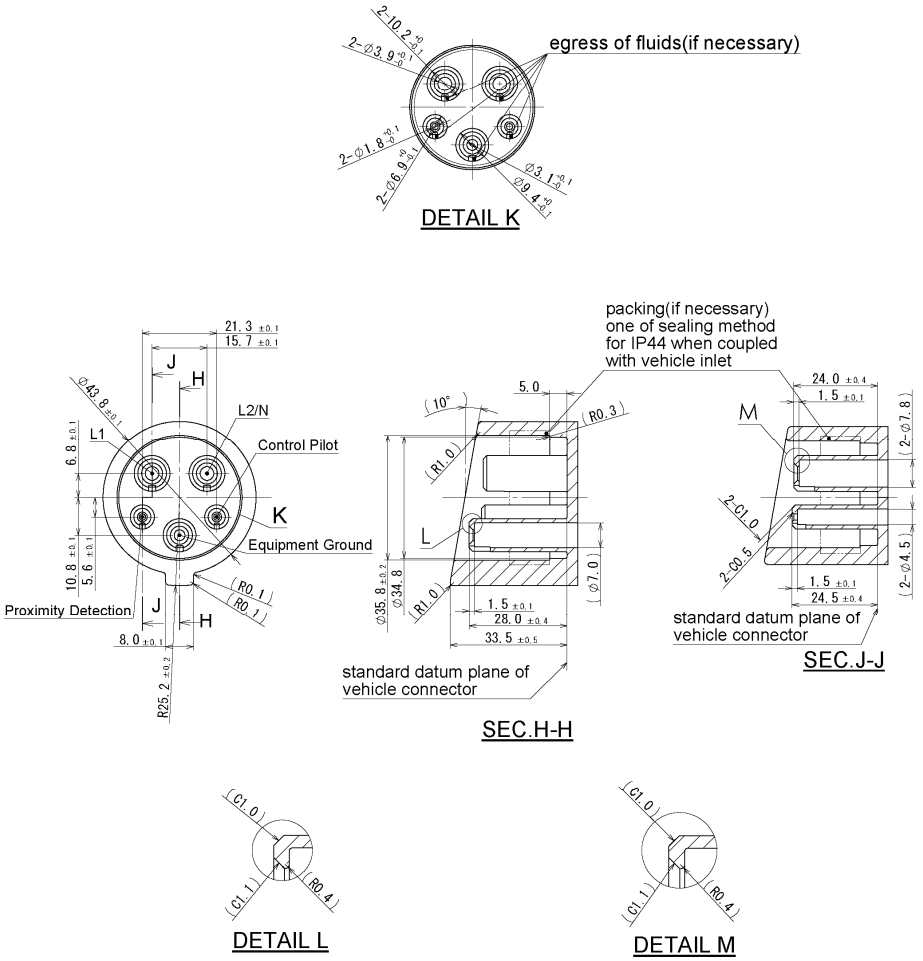

GENERAL TOLERANCE			
10MAX	50MAX	100MAX	ANGLE
±0.15	±0.2	±0.3	±30'

SHEET D-3

Latch shown in latched position

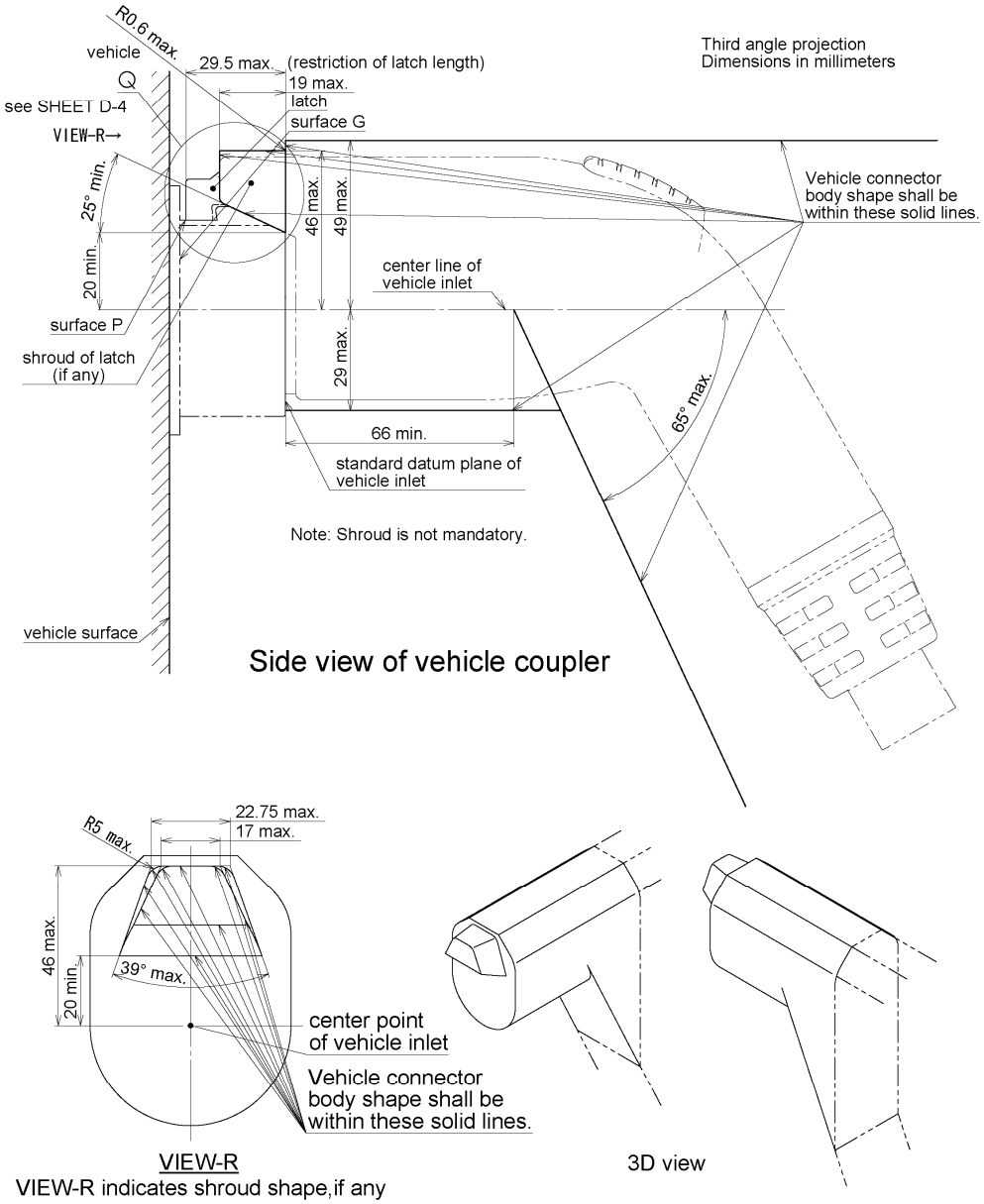

VIEW-R indicates shroud shape,if any

The sketches are not intended to govern design of vehicle connector body shape.

SHEET D-4

MAXIMUM OUTLINE OF LATCH
Latch shown in touching surface P

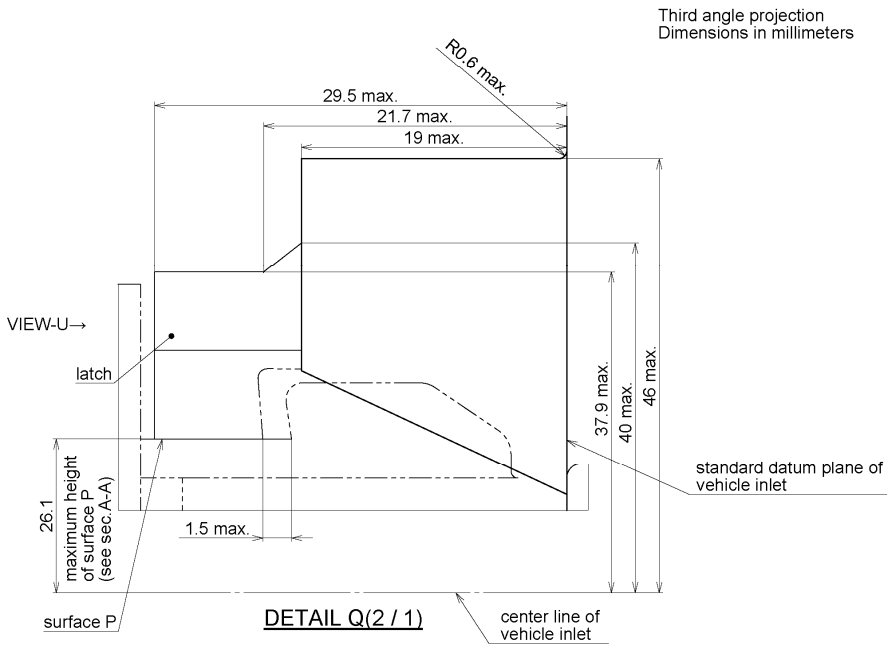

The sketches are not intended to govern design of latch shape except for the dimensions shown.

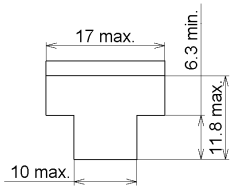

VIEW-U (indicates maximum outline of latch.)

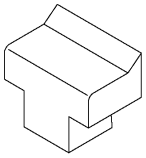

3D view

SHEET D-5

MAXIMUM DIMENSIONS OF VEHICLE CONNECTOR BODY AND LATCH OUT LINE

Third angle projection
Dimensions in millimeters

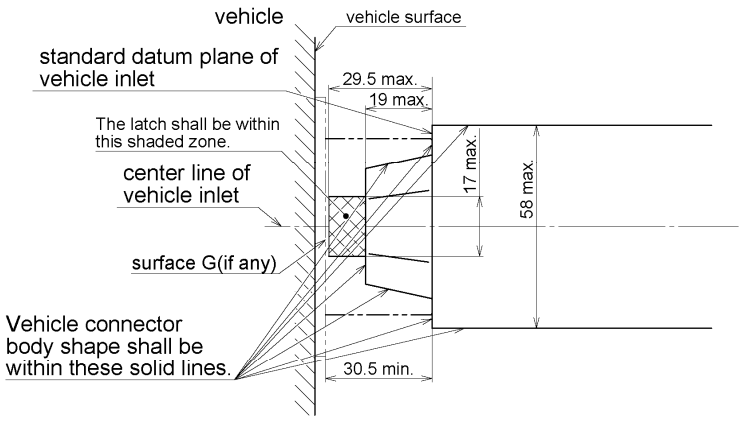

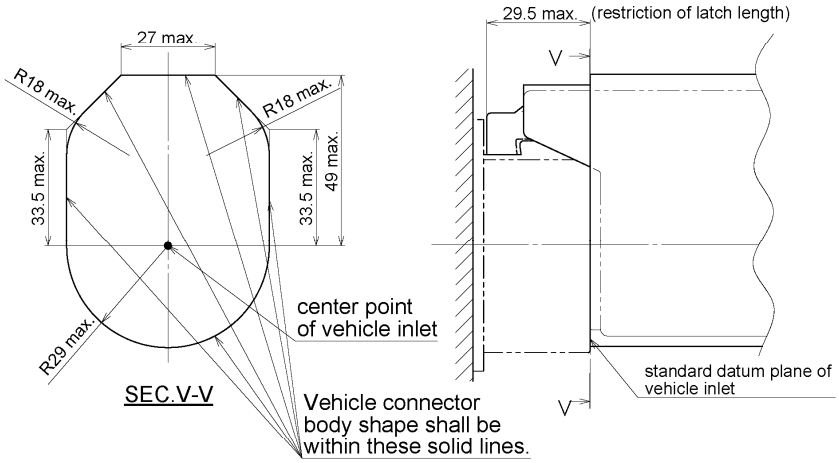

The sketches are not intended to govern design of vehicle connector body shape.

APPENDIX E - CHARGE COUPLER DIMENSIONAL REQUIREMENTS (LOCKABLE)

E.1 SCOPE

This appendix provides vehicle inlet access zone dimensional requirements for an optional lockable vehicle coupler. See sheets E 1-3.

SHEET E-1

Latch shown in latched position

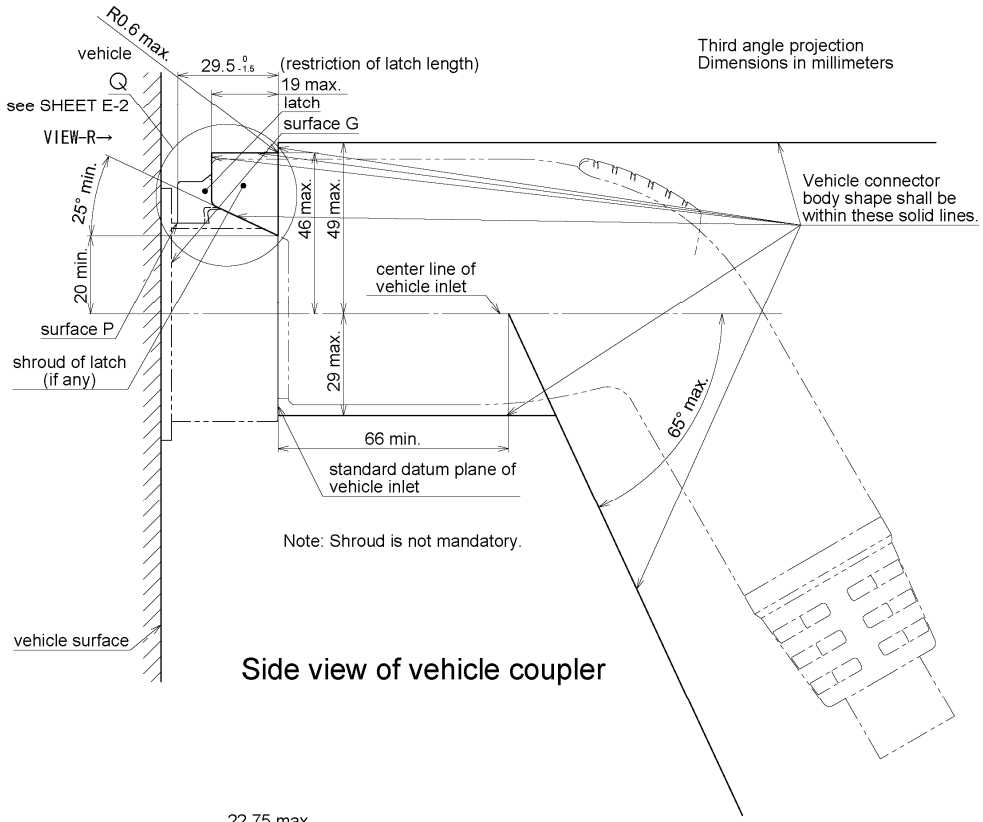

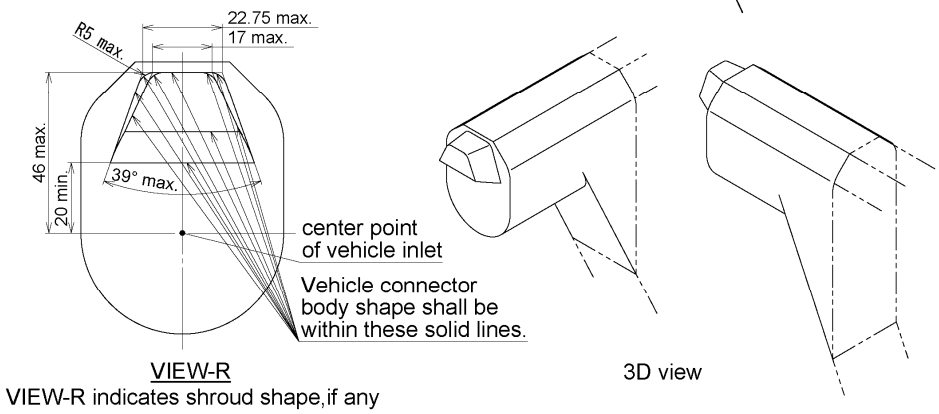

VIEW-R indicates shroud shape,if any

The sketches are not intended to govern design of vehicle connector body shape.

SHEET E-2

MAXIMUM OUTLINE OF LATCH

Latch shown in touching surface P

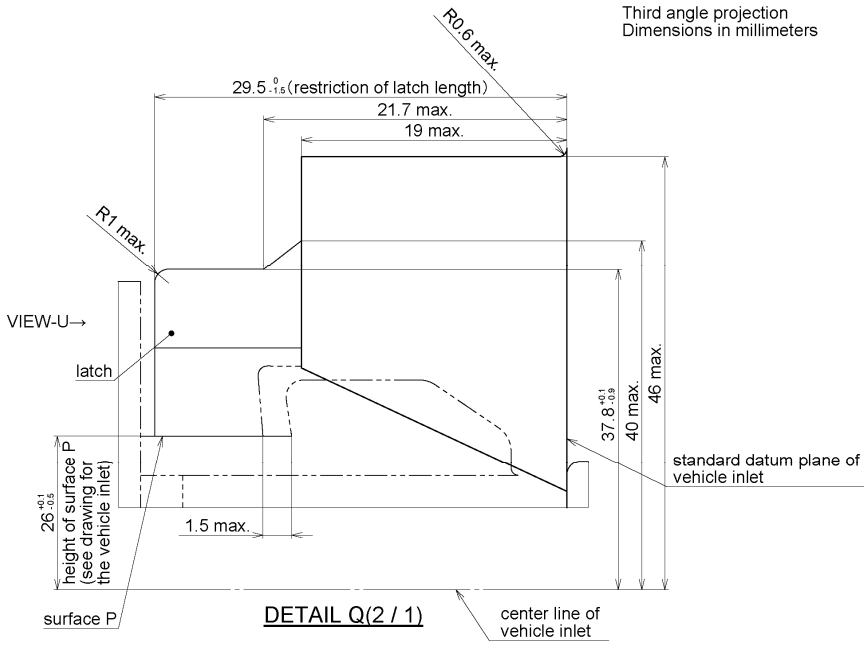

The sketches are not intended to govern design of latch shape except for the dimensions shown.

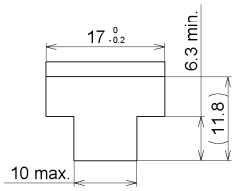

VIEW-U (indicates outline of latch.)

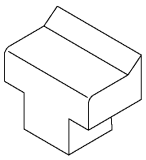

3D view

SHEET E-3

MAXIMUM DIMENSIONS OF VEHICLE CONNECTOR BODY AND LATCH OUT LINE

Third angle projection
Dimensions in millimeters

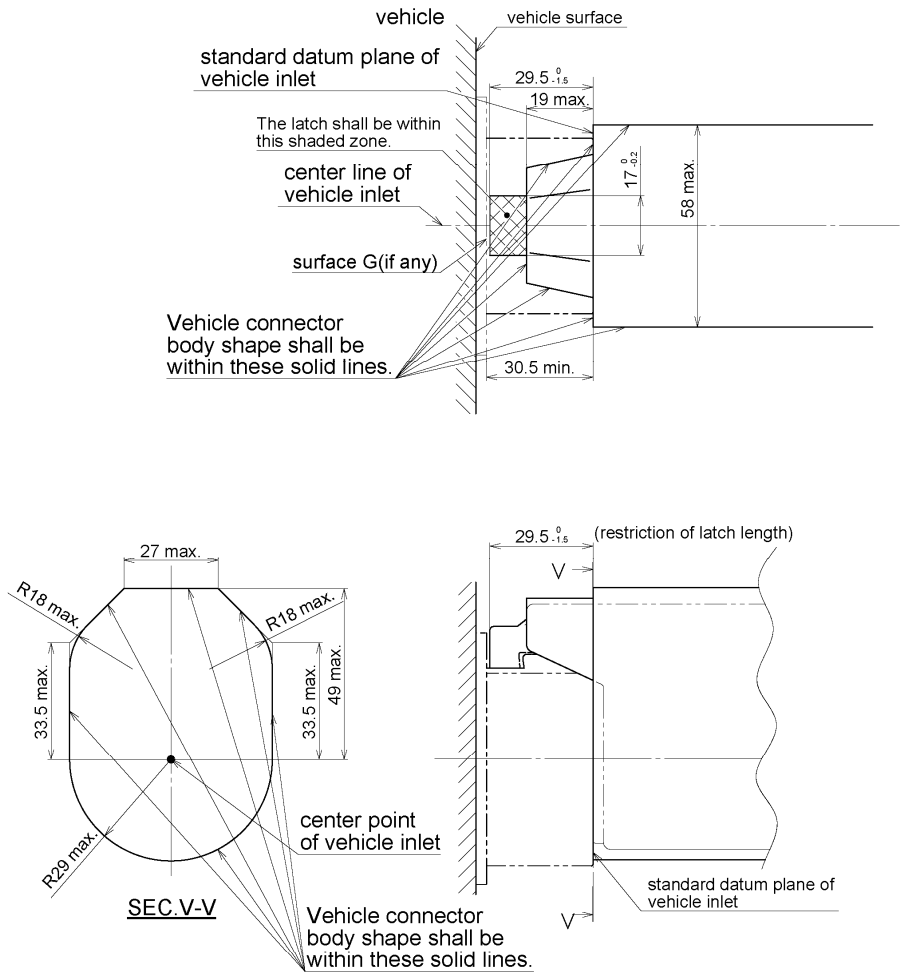

The sketches are not intended to govern design of vehicle connector body shape.