# Specification

**DSP0114**

## STATUS: Final

Copyright © "2000, 2001" Distributed Management Task Force, Inc. (DMTF). All rights reserved.

DMTF is a not-for-profit association of industry members dedicated to promoting enterprise and systems management and interoperability. DMTF specifications and documents may be reproduced for uses consistent with this purpose by members and non-members, if correct attribution is given. As DMTF specifications may be revised from time to time, the particular version and release cited should always be noted."

# Alert Standard Format (ASF) Specification

**Version 1.03**
**June 20, 2001**

## Abstract

The term “system manageability” represents a wide range of technologies that enable remote system access and control in both OS-present and OS-absent environments. These technologies are primarily focused on minimizing on-site I/T maintenance, maximizing system availability and performance to the local user, maximizing remote visibility of (and access to) local systems by I/T managers, and minimizing the system power consumption required to keep this remote connection intact. The *Distributed Management Task Force* (DMTF) defines *Desktop Management Interface* (DMI) and *Common Information Model* (CIM) interfaces that operate when the managed client is fully operational in its OS-present environment. This specification defines remote control and alerting interfaces that best serve the clients’ OS-absent environments.

## Editor

Kevin Cline

Intel Corporation

For the DMTF Pre-OS Working Group

# Change History:

| Version | Date | Author | Changes |
|---|---|---|---|
| 1.0a | October 13, 2000 | K. Cline | First Draft release for the DMTF Member Comment phase. |
| 1.0.b | December 13, 2000 | K. Cline | Updated for the following Member Comments:<br>• ASFCR001 Add RMCP to Terminology Table<br>• ASFCR002 Add URL to Terminology Table, pointing to Enterprise Numbers<br>• ASFCR003 Corrections to “Using the Message Tag” section.<br>• ASFCR004 Remove “header” comment from RMCP section 3.2.3.1<br>• ASFCR005 Boot options “clear” clarification (3.2.3.1)<br>• ASFCR006 Corrections to “C” style structures (4.1.2.6 and 4.1.2.7)<br>• ASFCR007 Add suggested policies for firmware use of boot options (5.2.1)<br>• ASFCR009 Return OEM command capability to RMCP boot options commands (3.2.3.1, 4.1.2.6, and 5.2.1.1).<br>• ASFCR010 Correct ASF IANA number in RMCP section (3.2.4). |
| 1.0.c | January 17, 2001 | K. Cline | Updated for the following Member Comments:<br>• ASFCR008 Add Asynchronous Notification SMBus message (<need section numbers>).<br>• ASFCR011 Clarify which device controls the de-assertion bit of a the Event Offset field for Get Event Data command (5.1.1.1). |
| 1.01 | May 23, 2001 | K. Cline | Accepted all previous changes and updated for the following Member Comments:<br>• ASFCR013 Add System Firmware Error/Progress codes<br>• ASFCR014 Clarifications found during ASD compliance documentation<br>• ASFCR015 Renumber checklists to produce sequential and ascending-ordering. |
| 1.02 | May 30, 2001 | K. Cline | Updated for the following Member Comments:<br>• ASFCR012 SMBus 2.0 Compliance update |
| 1.03 | June 13, 2001 | K. Cline | Updated for the following Member Comments:<br>• ASFCR016 Example correction in section 5.1.1.2 |
| 1.03 Final | June 19, 2001 | K. Cline | Document status -> Final |
| | June 20, 2001 | K. Cline | Name change to Alert Standard Format. |



Lenovo
Ex. 1037 - Page 2

# Table of Contents


1 Introduction ..... 2

1.1 Target Audience ..... 2

1.2 Related Documents ..... 2

1.3 Data Format ..... 3

1.4 Terminology ..... 3

2 Overview ..... 5

2.1 Principal Goals ..... 5

2.2 Problem Statement ..... 5

2.3 Solution ..... 5

2.4 Known Limitations ..... 7

3 Network Protocols ..... 8

3.1 Transmit Protocol (PET) ..... 8
3.1.1 PET Frame Behavior ..... 8
3.1.1.1 PET Re-transmission ..... 8
3.1.1.2 Transient Event Handling ..... 8
3.1.2 Agent Address Field ..... 8
3.1.3 Specific Trap Field ..... 8
3.1.4 Variable Bindings Fields ..... 8
3.1.4.1 PET Frame Content Sources ..... 10
3.1.5 Recommended PET Frame Values ..... 13
3.1.5.1 Environmental Events ..... 13
3.1.5.2 System Firmware Error Events ..... 14
3.1.5.3 System Firmware Progress Events ..... 15
3.1.5.4 OS Events ..... 16
3.1.5.5 System Heartbeat ..... 17
3.1.5.6 System Boot Failure ..... 17

3.2 Remote Management and Control Protocol (RMCP) ..... 18
3.2.1 RMCP UDP Port Numbers ..... 18
3.2.2 RMCP Packet Format ..... 18
3.2.2.1 RMCP Acknowledge ..... 19
3.2.2.2 RMCP Header ..... 20
3.2.2.3 ASF RMCP Data ..... 21
3.2.3 ASF RMCP Message Types ..... 23
3.2.3.1 Reset (10h), Power-up (11h), and Power Cycle Reset (13h) ..... 23
3.2.3.2 Unconditional Power-Down (12h) ..... 25
3.2.3.3 Presence Pong (40h) ..... 26
3.2.3.4 Capabilities Response (41h) ..... 26
3.2.3.5 System State Response (42h) ..... 28
3.2.3.6 Presence Ping (80h) ..... 29
3.2.3.7 Capabilities Request (81h) ..... 29
3.2.3.8 System State Request (82h) ..... 29
3.2.4 RMCP Usage Scenarios ..... 30
3.2.5 RMCP Considerations for LAN Alert-sending Devices ..... 33




Lenovo
Ex. 1037 - Page 3

# 4 Firmware Interfaces ..... 34

4.1 ACPI Definitions ..... 34
4.1.1 Control Methods ..... 34
4.1.1.1 Get Power-on Wait Time (GPWT) ..... 35
4.1.1.2 Set Power-on Wait Time (SPWT) ..... 35
4.1.2 ASF! Description Table ..... 35
4.1.2.1 ASF_INFO ..... 37
4.1.2.2 ASF_ALRT ..... 39
4.1.2.3 ASF_ALERTDATA ..... 40
4.1.2.4 ASF_RCTL ..... 41
4.1.2.5 ASF_CONTROLDATA ..... 42
4.1.2.6 ASF_RMCP ..... 42
4.1.2.7 ASF_ADDR ..... 44

4.2 SMBIOS Structures ..... 45
4.2.1 System Information (Type 1) ..... 45

4.3 SMBus Serial EEPROM (SEEPROM) ..... 45
4.3.1 Fixed SMBus Addresses (SEEPROM Record Type 06h) ..... 46
4.3.2 ASF Legacy-Device Alerts (SEEPROM Record Type 07h) ..... 46
4.3.3 ASF Remote Control (SEEPROM Record Type 08h) ..... 46

# 5 ASF SMBus Messages ..... 48

5.1 Alert-related Messages ..... 49
5.1.1 ASF-Sensor Poll Messages ..... 49
5.1.1.1 Get Event Data ..... 50
5.1.1.2 Get Event Status ..... 52
5.1.2 Asynchronous Alert Notification to SMBus Host ..... 53
5.1.3 Alert Configuration Message ..... 54
5.1.4 Watchdog Timer Support ..... 56
5.1.4.1 Start Watchdog Timer ..... 56
5.1.4.2 Stop Watchdog Timer ..... 57
5.1.5 Push Alert Messages ..... 57
5.1.5.1 Message with Retransmission ..... 57
5.1.5.2 Message without Retransmission ..... 58

5.2 Boot Option Messages ..... 58
5.2.1 Get Boot Options ..... 58
5.2.1.1 Return Boot Options Response ..... 59
5.2.1.2 No Boot Options Response ..... 59
5.2.2 Boot Options Clear ..... 59

5.3 Discovery and Status Messages ..... 60
5.3.1 Device Type Poll Message ..... 60
5.3.2 Set System State Message ..... 60

5.4 Remote-Control Device Action Message ..... 61

5.5 Legacy Sensor Device Alert Poll Message ..... 61

# 6 SMBus Device Characteristics ..... 62

6.1 Legacy Sensor Devices ..... 62
6.1.1 Sensor Requirements ..... 62
6.1.2 Usage of Firmware Legacy Sensor Device Alert Information ..... 63

6.2 ASF-Sensor Devices ..... 64




Lenovo
Ex. 1037 - Page 4

6.2.1 Device Identification ..... 64
6.2.2 Event Generation and Clearing ..... 65
6.2.3 Alert Status ..... 65
6.2.4 Device Power On Reset Time ..... 66

6.3 Remote Control Device ..... 66
6.3.1 Device Requirements ..... 66
6.3.2 Usage of Firmware Remote Control Device Information ..... 66
6.3.3 Remote Control Functions ..... 66

**Appendix A Additions to PET Specification 1.0 ..... 69**

A.1 Modem Support ..... 69
A.2 Battery Sensor ..... 69
A.3 System Firmware Error/Progress Descriptor ..... 69
A.4 Device Relative Entity Instances ..... 69
A.5 Event Source Type ..... 70
A.6 Sensor Type = 23h (Watchdog 2) Updates ..... 70
A.7 IPMI 1.0 Entity IDs ..... 70
A.8 Entity and Sensor support for Alert Sending Devices ..... 71

**Appendix B ASF Entity Section Map ..... 72**

B.1 Alert Sending Device ..... 72
B.2 Legacy Sensor ..... 72
B.3 ASF Sensor ..... 72
B.4 Remote Control Device ..... 73
B.5 Firmware ..... 73
B.6 Operating System ..... 73
B.7 Local Alert Configuration Software ..... 73
B.8 Remote Console Software ..... 74

**Appendix C ASF Entity Function Checklists ..... 75**

C.1 Alert Sending Device ..... 75
C.2 Local Alert-Sending Device Configuration Software ..... 76
C.3 Legacy Sensor ..... 77
C.4 ASF Sensor ..... 77
C.5 Remote Control Device ..... 77
C.6 System Firmware ..... 78
C.7 Management Console Software ..... 79



Lenovo
Ex. 1037 - Page 5

# 1 Introduction

The term “system manageability” represents a wide range of technologies that enable remote system access and control in both OS-present and OS-absent environments. These technologies are primarily focused on minimizing on-site I/T maintenance, maximizing system availability and performance to the local user, maximizing remote visibility of (and access to) local systems by I/T managers, and minimizing the system power consumption required to keep this remote connection intact. The *Distributed Management Task Force* (DMTF) defines *Desktop Management Interface* (DMI) and *Common Information Model* (CIM) interfaces that operate when the managed client is fully operational in its OS-present environment. This specification defines remote control and alerting interfaces that best serve the clients’ OS-absent environments.

## 1.1 Target Audience

Following are the target audience for this specification:

- OEMs and ISVs developing platform firmware
- OEMs and IHVs developing SMBus devices
- OEMs and ISVs developing system management software
- OEMs and IHVs developing communication devices, e.g. Ethernet controllers or modems

## 1.2 Related Documents

This document uses acronyms to reference other documents. For example, the acronym IPMI_1.0 refers to the Intelligent Platform Management Interface, Version 1.0. Acronyms are unique and enclosed in square brackets [IPMI_1.0]. For detailed information about the document referenced by an acronym, see the associated URL.

- [ACPI] *Advanced Configuration and Power Interface Specification*, 2.0, 27 July 2000, http://www.teleport.com/~acpi/spec.htm
- [RFC1157] *A Simple Network Management Protocol*, http://www.ietf.org/rfc/rfc1157.txt
- [CIM] CIM Standards, http://www.dmtf.org/spec/cims.html
- [IPMI_1.0] *Intelligent Platform Management Interface Specification v1.0, rev 1.1,* August 26, 1999, http://developer.intel.com/design/servers/ipmi/
- [RFC1188] *IP and ARP on FDDI Networks*, http://www.ietf.org/rfc/rfc1180.txt
- [FRU] *IPMI Field Replaceable Unit (FRU) Information Storage Definition*, v1.0, 16 September 1998, ftp://download.intel.com/design/servers/ipmi/fru1010.pdf
- [MTLS] *Metolious ACPI/Manageability Specification*, v1.0, 30 April 1999, http://developer.intel.com/ial/metolious/index.htm
- [NDCPM] *Network Device Class Power Management Reference Specification*, v1.0a, 21 November 1997, http://www.microsoft.com/hwdev/specs/PMref/PMnetwork.htm
- [PET_1.0] *Platform Event Trap Specification*, v1.0, 7 December 1998, ftp://download.intel.com/design/servers/ipmi/pet100.pdf
- [PET] *Platform Event Trap Specification*, v1.1, **TBD**, ftp://download.intel.com/design/servers/ipmi/**TBD**
- [SCMIS] *SMBus Control Method Interface Specification*, v1.0, 10 December 1999, http://www.smbus.org/specs/index.html
- [SMBIOS] *System Management BIOS Reference Specification*, v2.3.1, 16 March 1999. ftp://download.intel.com/ial/wfm/smbios.pdf
- [SMBUS_2.0] *System Management Bus (SMBus) Specification*, v2.0, 03 August 2000, http://www.smbus.org/specs/index.html
- [RFC_UDP] *User Datagram Protocol*, RFC 768, http://www.ietf.org/rfc/rfc0768.txt



Lenovo
Ex. 1037 - Page 6

## 1.3 Data Format

All numbers specified in this document are in decimal format unless otherwise indicated. A number preceded by '0x' or followed by the letter 'h' indicates hexadecimal format, and a number followed by the letter 'b' indicates binary format. For example, the numbers 10, 0x0A, 0Ah, and 1010b are equivalent.

One exception is section 5. The values associated with the Wr, Command, Byte Count, Sub-command, Version Number, A, and ~A fields are each specified in binary format with no trailing letter 'b'.

## 1.4 Terminology

| Term | Description |
|---|---|
| ACPI | Advanced Configuration and Power Interface. |
| AoL | Alert on LAN™ |
| Alert-sending device | This term, used throughout this document, refers to a communications device that is capable of sending ASF-defined alerts. |
| ASL | ACPI Source Language |
| ASF IANA | Within this document, refers to the IANA-assigned Enterprise Number for ASF: 4542 (decimal) or 11BEh. |
| CIM | Common Information Model |
| DMTF | Distributed Management Task Force, http://www.dmtf.org |
| DMI | Desktop Management Interface |
| GUID | Globally Unique Identifier, synonymous with UUID (Universally Unique Identifier). |
| IANA | Internet Assigned Numbers Authority, http://www.iana.org. This is the entity that assigns Enterprise Numbers; see http://www.isi.edu/in-notes/iana/assignments/enterprise-numbers for the current number assignments. |
| IHV | Independent Hardware Vendor |
| IP | Internet Protocol |
| IPMI | Intelligent Platform Management Interface. See http://developer.intel.com/design/servers/ipmi/spec.htm. |
| ISV | Independent Software Vendor |
| NIC | Network Interface Card |
| NBO | Network Byte Order. Refers to the order in which the bytes of a multi-byte number are transmitted on a network — most significant byte first. This might be different than the order in which the number is stored in memory, depending on the processor architecture. |
| OEM | Original Equipment Manufacturer |
| OS | Operating System. |
| OS-absent | Refers to a system's pre-boot, low-power, and OS-hung environments. |
| PCI | Peripheral Components Interface, see http://www.pcisig.com |
| PDU | Protocol Data Unit |
| PEC | Packet Error Code. |
| PET | Platform Event Trap. See http://developer.intel.com/design/servers/ipmi/spec.htm. |
| RFC | Request For Comment |
| RMCP | Remote Management and Control Protocol, see *3.2 Remote Management and Control Protocol (RMCP)* in this document for further information. |
| SEEPROM | Serial Electrically-Erasable Programmable Read-Only Memory |
| SMBus | System Management Bus. See http://www.smbus.org |



Lenovo
Ex. 1037 - Page 7

| Term | Description |
|---|---|
| SNMP | Simple Network Management Protocol. |
| UTC | Universal Time Coordinated. Greenwich Mean Time (GMT) updated with leap seconds. |


Lenovo
Ex. 1037 - Page 8

# 2 Overview

Alerting technologies provide advance warning and system failure indication from managed clients to remote management consoles. Initial generations of this technology — like the IBM/Intel *Alert on LAN*™ (AoL) implementations — provided remote notification of client system states and hardware or software failures without regard to operating system or system power state. The *Intelligent Platform Management Interface* initiative, led by Intel and others, subsequently provided an open alert interface: the *Platform Event Trap*. Management console providers and system OEMs were faced with the possibility of supporting multiple alerting interfaces.

Once a system alert provides its warning or error report, the next step in remote system manageability is to allow corrective action to be taken — these actions include the ability to remotely reset or power-on or -off the client system. When the system is in an OS-present state, these actions can be provided by Common Information Model (CIM) interfaces [CIM] that interact with the local system and provide orderly shutdown capabilities. This specification provides similar functionality when the system is in an *OS-absent* state, as added by the second generation of the IBM/Intel *AoL* technologies.

## 2.1 Principal Goals

The principal goal of this specification is to define standards-based interfaces with which vendors of alerting and corrective-action offerings can implement products and ensure interoperability. These vendors include:

- Add-in card suppliers
- SMBus sensor suppliers
- Communication controller suppliers
- System vendors
- Operating system vendors, with a primary focus on operating systems which are ACPI-aware.
- Management application vendors

The standards-based protocols (e.g. SNMP, UDP) upon which this specification's interfaces are built are lightweight, bit-based information carriers since this specification anticipates that the majority of the ASF client implementation will be hardware and/or firmware based. CIM-based configuration methods can provide the abstraction layer between OS-present XML implementations and ASF-defined low-level primitives.

## 2.2 Problem Statement

Multiple solutions exist in the industry today, resulting in a loss of interoperability in system alert and corrective-action offerings.

## 2.3 Solution

An *Alerting System* consists of a client system (or systems) and a management console that both monitors and controls the clients. An ASF-aware client provides the following interfaces to allow interoperability between the client and its management console:

1. the alert messages transmitted by the client system
2. the remote maintenance requests sent to the client system and the associated responses
3. the data description of the client's system-specific capabilities and characteristics
4. the software used to configure or control the client system in an OS-present state

An additional level of interoperability occurs between a client system's alerting components:



Lenovo
Ex. 1037 - Page 9

1. the system firmware methods used to communicate system capabilities to an alert-capable add-in card's OS-present configuration software
2. the format of the messages sent between the add-in card, the local system host, and local system sensors

The following graphic gives a pictorial portrayal of these components.

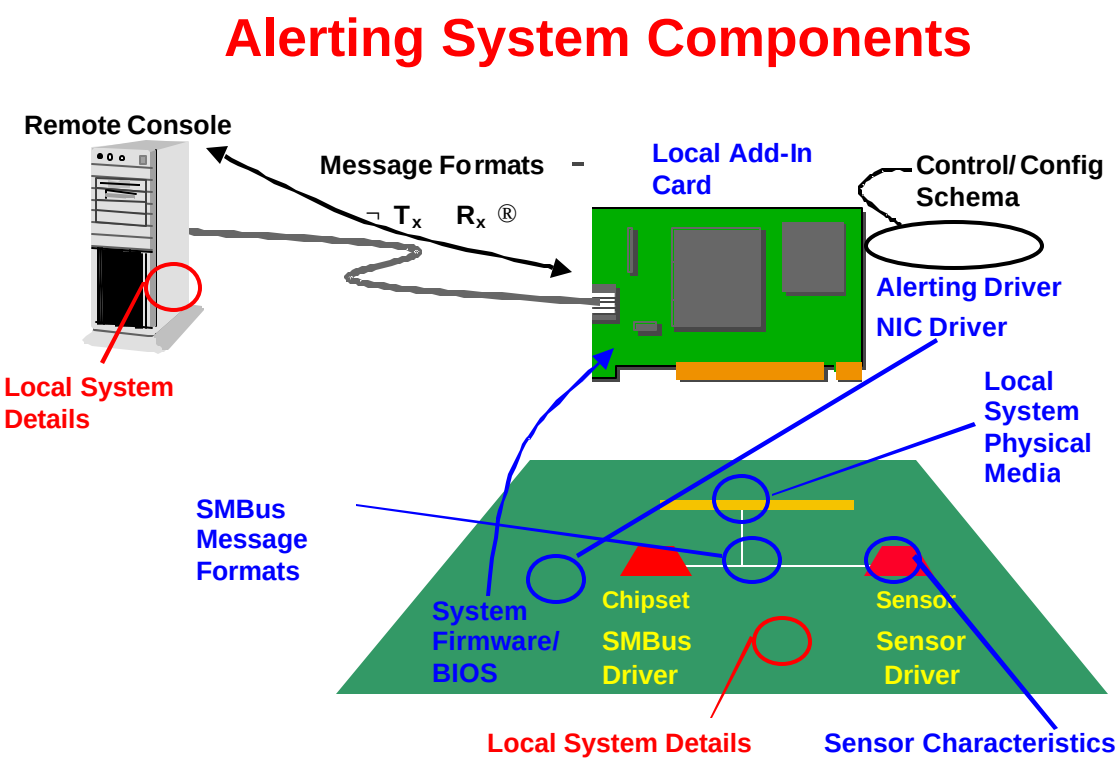


When the system owner adds an alert-sending device (e.g. an Ethernet add-in card) to an ASF-capable managed client, the alert-sending device must be configured with the client's specific hardware configuration before it can properly issue alerts and respond to remote maintenance requests. To accomplish this, the client system requires one good boot to an OS-present environment to allow the device's configuration software to run and store system-specific information into the device's non-volatile storage.

In an ACPI-aware OS-present environment, the alert-sending device's configuration software interrogates the client's configuration data to retrieve information required for any alert messages to be sent and stores that information into the device's non-volatile storage for use in the OS-absent environment:

1. The client's ACPI implementation contains its ASF Capabilities, including the IANA Manufacturer ID and System ID
2. The client's SMBIOS structure-table contains the system GUID (or UUID)
3. The operating system has assigned a TCP/IP address to the alert-sending device
4. How much time the alert-sending device waits before issuing a system boot-failure alert.

The configuration software also provides an interface to allow the system owner to identify the TCP/IP address of the management console to which any alert messages are to be sent by this managed client.

During this OS-present configuration process, the managed client's optional ASF configuration is also determined and stored in the alert-sending device's non-volatile storage:


Lenovo
Ex. 1037 - Page 10

1. If the client includes legacy SMBus sensors, the addressing and configuration information for each.
2. If the client supports remote-control operations, which ASF-defined features are supported.

Once the system owner has configured the alert-sending device, the managed client is enabled to send alert messages and, optionally, respond to remote-control requests from a specified management console.

## 2.4 Known Limitations

The following are known limitations of an ASF-enabled system:

1. After a change to the system's hardware configuration, e.g. adding or removing a card, at least one good boot to the system's OS-present environment is required for the ASF subsystem to properly operate. The OS-present environment is used to configure the ASF alert-sending device with information that is not known or easily determinable within the OS-absent environment, e.g. management console and local system TCP/IP addresses.
2. The OS-present control of system-specific ASF features is reduced if a non-ACPI-aware operating system is used, since ACPI provides current-generation "standard" methods for the OS-present environment to communicate with system firmware. Plug-and-play calling interfaces, such as those specified by [SMBIOS], are not easily supported in current-generation operating systems.
3. No standard security interfaces are currently defined to control the execution of ASF-RMCP messages by the client system. Implementers are discouraged from using security mechanisms within the RMCP packet structure, but to instead address security at the network infrastructure level (e.g. deployment schemes and firewalls). If implementers do in fact design-in RMCP security, it must be capable of being disabled for use with ASF solutions and management consoles that do not implement these proprietary security schemes.



Lenovo
Ex. 1037 - Page 11

# 3 Network Protocols

## 3.1 Transmit Protocol (PET)

The ASF protocol for sending alerts from a managed client to a management console is the *Platform Event Trap* [PET].

### *3.1.1 PET Frame Behavior*

#### 3.1.1.1 PET Re-transmission

An ASF alert-sending device retransmits each PET frame two (2) times for a total of three (3) transmissions per event; all three transmissions must occur within a 1-minute window and contain the same *Sequence Number* field. A management console should treat identical events it receives outside the 1-minute window as a new event.

***Exceptions***: No retransmission is performed when the PET frame issued by the alert-sending device is either the result of a *General Push Alert Message* without retransmission (see 5.1.5.2) or a *System Heartbeat* (see 3.1.5.5).

#### 3.1.1.2 Transient Event Handling

The managed client does not transmit transient events that happen when the alert network connection is down (or otherwise unavailable). ASF defines a transient event as one that transitions from an original state to another state and then back to the original state. For example, if a voltage event asserts and de-asserts while the connection is down, the client must not send any voltage event PET frames when the connection is re-established. This mode of operation gives ASF-aware management consoles a deterministic behavior of any PETs issued by a managed client.

### *3.1.2 Agent Address Field*

If the transport for the PET frame is IP, the Agent Address field in the Trap PDU must contain the IP address of the station that caused the PET event per [RFC1157]. If the transport is not IP, then the Agent Address is set per the RFC for that transport, e.g. RFC 1420 for IPX.

This specification requires that the alert-sending device support IP protocols; other transports are optional.

### *3.1.3 Specific Trap Field*

The specific trap field of the SNMP Trap header contains the main event information for the PET event.

### *3.1.4 Variable Bindings Fields*

The Variable Bindings Fields in a PET frame contain the system and sensor information for an event.

| PET Variable Binding Field | Description |
|---|---|
| GUID | The GUID is required for ASF alerts; the value is specified by the system's SMBIOS implementation. See *4.2.1 System Information (Type 1)* on page 45 for details. |
| Sequence Number | The Sequence Number is required; see section 3.1.1.1 for the rules on re-transmission. |
| Local Timestamp | The Local Timestamp is recommended. |
| UTC Offset | The UTC offset is recommended if there is a Local Timestamp |



Lenovo
Ex. 1037 - Page 12

| PET Variable Binding Field | Description |
|---|---|
| Trap Source Type | The Trap Source Type is the device or software that originated the trap on the network. Normally it will be the NIC (50h), the System Management Card (58h), or the Modem (60h). |
| Event Source Type | The Event Source Type describes the originator of the event. The Event Source Type is ASF 1.0 (68h) for all PET frames defined by this specification.<br>Event Source Type values in the range 68h to 6Fh are reserved by [PET] for ASF use:<br>68h ASF 1.0 Implementation<br>69h-6Fh Reserved for future assignment by this (ASF) specification. |
| Event Severity | The Event Severity setting is met to give a management station an indication of the severity of the event in the PET Frame. Typical values are Monitor (0x01), Non Critical (0x08), or Critical Condition (0x10). |
| Sensor Device | The Sensor Device is the SMBus address of the sensor that caused the event for the PET Frame. In the case of a poll, the address of the polled sensor is used. In the case of a push, the address of the pushing sensor is used. If there is no SMBus address associated to the event (e.g. a firmware error or firmware progress message), then the value is 0xFF (unspecified).<br>If an SMBus address is represented in this field, bits 7 through 1 contain the address, and bit 0 is set to 0b. |
| Sensor Number | The Sensor Number is used to identify a given instance of a sensor relative to the Sensor Device. Values of 00h and FFh identify that the Sensor Number is not specified. |
| Entity | The Entity indicates the platform device or subsystem associated with the event, usually identifying a Field Replaceable Unit (FRU). For example, an over-temperature event with this field set to “Processor” indicates a processor over-temperature event. |
| Entity Instance | When a system includes multiple device instances, e.g. a multi-processor system, Entity Instance identifies which unique device is associated with the event. For example, if a system has two processors, this field distinguishes between events associated with Processor #1 and Processor #2. A value of 00h in this field indicates that Entity Instance is unspecified. |
| Event Data | The Event Type determines the Event Data. Some of the PET messages defined in this specification allow the inclusion of a variable number of event data bytes, to further describe the event. When event data is included, the first byte of event data (Event Data 1) defines the format of Event Data bytes 2 through 5 that follow, using the following enumerations:<br>00b Data not specified<br>01b Data conforms to standard definitions<br>10b Data conforms to OEM definitions<br>11b Reserved for future assignment<br>ED1 Bit Range Description<br>7:6 Defines the format of Event Data 2<br>5:4 Defines the format of Event Data 3<br>3:2 Defines the format of Event Data 4<br>1:0 Defines the format of Event Data 5<br>***Note***: Values in Event Data bytes 6 through 8 are OEM-specific and outside the range of this specification. |
| Language Code | The Language Code is used with the OEM Custom Fields. For PET frames that do not have any OEM specific data, the language code should be set to FFh (unspecified). |
| Manufacturer ID | The IANA Manufacturer ID associated with the alerting system. The value is specified by the system’s ACPI implementation, see *4.1.2.1 ASF_INFO* on page 37 for details. |
| System ID | The manufacturer associated with the alerting system assigns the system identifier. The value is specified by the system’s ACPI implementation, see *4.1.2.1 ASF_INFO* on page 37 for details. |



Lenovo
Ex. 1037 - Page 13

| PET Variable Binding Field | Description |
|---|---|
| OEM Custom Fields | Whenever possible PET frames should use the error codes and values contained in the PET specification to describe events. The OEM Custom fields should only be used if the event cannot be expressed in a standard way. If there are no OEM Custom Fields, then the type field is set to C1h. |

### 3.1.4.1 PET Frame Content Sources

The following sections use this legend to provide a map to the information source for the various elements of a Platform Event Trap:

| Hard-coded by Alert-Sending Device | SMBIOS Data | SEEPROM Data | Sensor Data |
|---|---|---|---|
| | | | |
| SMBus "Push Alert" Message Data | Determined by Alert-Sending Device (non-constant) | ACPI Data | |
| | | | |

These abbreviations are used for PET fields within the following sections:

*TST* Trap Source Type

*EST* Event Source Type

*SEV* Severity

*SD* Sensor Device

*S#* Sensor Number

*E* Entity

*EI* Entity Instance

*LC* Language Code

**Initial Firmware Timeout**

This information map applies to the initial timeout failure that an alert-sending device transmits if the reset-activated watchdog timer is not stopped by the managed client's firmware.

*Specific Trap Field*

| Reserved | Event Sensor Type | Event Type | Event Offset |
|---|---|---|---|
| | | | |

*Variable Bindings Fields*

| GUID | Seq# | Local |
|---|---|---|
| | | |
| | | |

| Timestamp | UTC Offset | TST | EST | SEV | SD | S# | E | EI | Event Data | | | | | | | | LC |
|---|---|---|---|---|---|---|---|---|---|---|---|---|---|---|---|---|---|
| | | | | | | | | | | | | | | | | | |
| | | | | | | | | | | | | | | | | | |

| Manufacturer ID | System ID | OEM C. F. |
|---|---|---|
| | | |
| | | |



Lenovo
Ex. 1037 - Page 14

## Polled Legacy Sensors — Specified by ACPI

This information map applies to alerts issued by an alert-sending device based on that device's detection of an active event upon polling a legacy sensor that is specified by the system's ACPI implementation.

*Specific Trap Field*

| Reserved | Event Sensor Type | Event Type | Event Offset |
|---|---|---|---|

*Variable Bindings Fields*

| GUID | Seq# | Local |
|---|---|---|

| Timestamp | UTC Offset | TST | EST | SEV | SD | S# | E | EI | Event Data | LC |
|---|---|---|---|---|---|---|---|---|---|---|

| Manufacturer ID | System ID | OEM C. F. |
|---|---|---|

## Polled Legacy Sensors — Specified by SEEPROM Data

This information map applies to alerts issued by an alert-sending device based on that device's detection of an active event upon polling a legacy sensor that is specified by the system's SEEPROM data.

*Specific Trap Field*

| Reserved | Event Sensor Type | Event Type | Event Offset |
|---|---|---|---|

*Variable Bindings Fields*

| GUID | Seq# | Local |
|---|---|---|

| Timestamp | UTC Offset | TST | EST | SEV | SD | S# | E | EI | Event Data | LC |
|---|---|---|---|---|---|---|---|---|---|---|

| Manufacturer ID | System ID | OEM C. F. |
|---|---|---|



Lenovo
Ex. 1037 - Page 15

## Polled ASF Sensors

This information map applies to alerts issued by an alerting device based on that device's detection of an active event upon polling an ASF-compliant sensor via the "Poll Alert Message With Event Data" SMBus command.

*Specific Trap Field*

| Reserved | Event Sensor Type | Event Type | Event Offset |
|---|---|---|---|

*Variable Bindings Fields*

| GUID | Seq# | Local |
|---|---|---|

| Timestamp | UTC Offset | TST | EST | SEV | SD | S# | E | EI | Event Data | LC |
|---|---|---|---|---|---|---|---|---|---|---|

| Manufacturer ID | System ID | OEM C. F. |
|---|---|---|

## "Pushed" Events

This information map applies to alerts issued by an alerting device based on either receipt of a "Firmware Error, Firmware Progress, or General Push Alert Message" or the expiration of a watchdog timer after receipt of a "Firmware Watchdog Start Message".

*Specific Trap Field*

| Reserved | Event Sensor Type | Event Type | Event Offset |
|---|---|---|---|

*Variable Bindings Fields*

| GUID | Seq# | Local |
|---|---|---|

| Timestamp | UTC Offset | TST | EST | SEV | SD | S# | E | EI | Event Data | LC |
|---|---|---|---|---|---|---|---|---|---|---|

| Manufacturer ID | System ID | OEM C. F. |
|---|---|---|



Lenovo
Ex. 1037 - Page 16

### 3.1.5 Recommended PET Frame Values

This section describes the format for various PET frames. A given managed client is not required to support all the listed PET frames, but if a client supports the event described by one of the listed PET frames, the client should format the PET frame as described in this section.

#### 3.1.5.1 Environmental Events

This table describes the *Specific Trap Field* values for common environmental events. An implementation has options as to whether it returns generic information that just indicates the criticality of the event, or whether it returns information also indicating that the event was triggered by a rising or falling condition on the monitored parameter, e.g. whether an over-temperature or under-temperature condition caused the event.

*The list is presented as a guide only. It is not intended to represent a complete list of the possible environmental events from a system*. Management consoles that interpret events should be prepared to accept any of the possible specified Event Sensor Type, Event Type and Event Offset values documented by [PET].

The Entity for a given event varies according to what system device the environmental sensor is monitoring. For example, a typical managed client can have temperature monitoring associated with its system board and with the main processor. A thermal event associated with the system board will have Entity set to 7 (System Board) and Entity Instance set to 1 (Primary), while a thermal event associated with the processor will have Entity set to 3 (Processor) and Entity Instance set to 1 (Primary).

| Description | Event Sensor Type | Event Type | Event Offset |
|---|---|---|---|
| TEMPERATURE PROBLEMS | | | |
| Generic Critical Temperature Problem | 01h (Temperature) | 07h (generic severity) | 02h (transition to Critical from less severe) |
| Generic Temperature Warning | | | 03h (transition to non-critical from less severe) |
| Over-Temperature Problem | | 01h (Threshold-based) | 09h (Upper Critical - going high) |
| Over-Temperature Warning | | | 07h (Upper Non-Critical, going high) |
| Under-Temperature Problem | | | 02h (Lower Critical - going low) |
| Under-Temperature Warning | | | 00h (Lower Non-Critical, going low) |
| VOLTAGE PROBLEMS | | | |
| Generic Critical Voltage Problem | 02h (Voltage) | 07h (generic severity) | 02h (transition to Critical from less severe) |
| Over-Voltage Problem | | 01h (Threshold-based) | 09h (Upper Critical - going high) |
| Under-Voltage Problem | | | 02h (Lower Critical - going low) |



Lenovo
Ex. 1037 - Page 17

| Description | Event Sensor Type | Event Type | Event Offset |
|---|---|---|---|
| FAN PROBLEMS | | | |
| Generic Critical Fan failure | 04h (Fan) | 07h (generic severity) | 02h (transition to Critical from less severe) |
| Generic predictive Fan failure | | 03h (generic digital/discrete event) | 01h (predictive failure asserted) |
| Fan Speed Problem (speed too low to meet chassis cooling spec's) | | 01h (Threshold-based) | 02h (Lower Critical - going low) |
| Fan Speed Warning (Fan speed below expected speed. Cooling still adequate) | | | 00h (Lower Non-Critical, going low) |
| Case Intrusion. | 05h (Physical Security [Chassis Intrusion]) | 6Fh (Sensor specific) | 00h (General Chassis Intrusion) |

### 3.1.5.2 System Firmware Error Events

This document defines a standard set of system firmware errors that are reported in the *Event Data 2* PET sub-field for Sensor Type 0Fh (System Firmware Error/Progress), Sensor-specific Offset 00h (Standard System Firmware Error):

| Descriptor Code | Description |
|---|---|
| 00h | Unspecified. |
| 01h | No system memory is physically installed in the system. |
| 02h | No usable system memory, all installed memory has experienced an unrecoverable failure. |
| 03h | Unrecoverable hard-disk/ATAPI/IDE device failure. |
| 04h | Unrecoverable system-board failure. |
| 05h | Unrecoverable diskette subsystem failure. |
| 06h | Unrecoverable hard-disk controller failure. |
| 07h | Unrecoverable PS/2 or USB keyboard failure. |
| 08h | Removable boot media not found |
| 09h | Unrecoverable video controller failure |
| 0Ah | No video device detected. |
| 0Bh | Firmware ROM corruption detected |
| 0Ch | CPU VID Mismatch. One or more processors sharing the same voltage supply have mismatched voltage requirements. |
| 0Dh | CPU speed-matching failure. |
| 0Eh to FFh | Reserved for future definition by this specification. |

This table describes the *Specific Trap Field* and *Entity* values associated with some typical system firmware errors. The *Event Type* sub-field for all these events is set to 6Fh (Sensor specific). See above or section 3.1.5.3 for the Event Data 2 field definitions for Event Offset values 00h and 01h, respectively.

| Description | Event Sensor Type | Event Offset | Event Data 1/2 | Entity |
|---|---|---|---|---|
| No system memory; memory missing | 0Fh (System Firmware Error or Progress) | 00h (System Firmware Error) | 40h/01h | 32d (Memory Device) |



Lenovo
Ex. 1037 - Page 18

| Description | Event Sensor Type | Event Offset | Event Data 1/2 | Entity |
|---|---|---|---|---|
| No system memory; unrecoverable failure | 0Fh (System Firmware Error or Progress) | 00h (System Firmware Error) | 40h/02h | 32d (Memory Device) |
| Unrecoverable hard-disk failure. | 0Fh (System Firmware Error or Progress) | 00h (System Firmware Error) | 40h/03h | 4 (Disk or Disk Bay) |
| Unrecoverable system board failure. | 0Fh (System Firmware Error or Progress) | 00h (System Firmware Error) | 40h/04h | 7 (System board) |
| No bootable media. | 1Eh (Boot Error) | 00h (no bootable media) | 40h/00h | 00h (Unspecified) |
| Hang during option ROM initialization (specified via watchdog set command) | 0Fh (System Firmware Error or Progress) | 01h (System Firmware Hang) | 40h/08h | 11d (Add-in board) |
| Unrecoverable multi-processor configuration mismatch | 0Fh (System Firmware Error or Progress) | 00h (System Firmware Error) | 40h/0Bh | 3 (Processor) |

### 3.1.5.3 System Firmware Progress Events

This document defines a standard set of firmware progress codes that are reported in the *Event Data 2* PET sub-field via Sensor Type 0Fh (System Firmware Error/Progress), Sensor-specific Offset either 01h (System Firmware Hang) or 02h (System Firmware Progress). Each descriptor is associated with a significant event within a system's firmware bring-up sequence; the ordering of the events implies no specific sequencing.

| Descriptor Code | Description |
|---|---|
| 00h | Unspecified. |
| 01h | Memory initialization. |
| 02h | Hard-disk initialization |
| 03h | Secondary processor(s) initialization |
| 04h | User authentication |
| 05h | User-initiated system setup |
| 06h | USB resource configuration |
| 07h | PCI resource configuration |
| 08h | Option ROM initialization |
| 09h | Video initialization |
| 0Ah | Cache initialization |
| 0Bh | SM Bus initialization |
| 0Ch | Keyboard controller initialization |
| 0Dh | Embedded controller/management controller initialization |
| 0Eh | Docking station attachment |
| 0Fh | Enabling docking station |
| 10h | Docking station ejection |
| 11h | Disabling docking station |
| 12h | Calling operating system wake-up vector |
| 13h | Starting operating system boot process, e.g. calling Int 19h |
| 14h | Baseboard or motherboard initialization. |
| 15h | Reserved. |



Lenovo
Ex. 1037 - Page 19

| Descriptor Code | Description |
|---|---|
| 16h | Floppy initialization. |
| 17h | Keyboard test. |
| 18h | Pointing device test |
| 19h | Primary processor initialization |
| 1Ah to FFh | Reserved for future definition by this specification. |

This table describes the *Specific Trap Field* values for some system firmware progress events. The *Event Type* sub-field for each of these traps is set to 6Fh (Sensor-specific).

| Description | Event Sensor Type | Event Offset | Event Data 1/2 | Entity |
|---|---|---|---|---|
| System firmware started. The presence of this progress code indicates that at least one CPU is properly executing. | 25h (Entity Presence) | 00h (Entity Present) | 40h/00h | 34d (BIOS) |
| Starting memory initialization and test. | 0Fh (Firmware Error or Progress) | 02h (System Firmware Progress, entry) | 40h/01h | 32d (Memory Device) |
| Completed memory initialization and test. | 0Fh (Firmware Error or Progress) | 82h (System Firmware Progress, exit) | 40h/01h | 32d (Memory Device) |
| Starting hard-disk initialization and test. | 0Fh (Firmware Error or Progress) | 02h (System Firmware Progress, entry) | 40h/02h | 4 (Disk or Disk Bay) |
| Waiting for user-password entry. | 0Fh (Firmware Error or Progress) | 02h (System Firmware Progress, entry) | 40h/04h | 34d (BIOS) |
| Entering BIOS setup. | 0Fh (Firmware Error or Progress) | 02h (System Firmware Progress, entry) | 40h/05h | 34d (BIOS) |
| Starting system resource configuration, e.g. performing PCI configuration. | 0Fh (Firmware Error or Progress) | 02h (System Firmware Progress, entry) | 40h/07h | 34d (BIOS) |
| Starting option ROM initialization. | 0Fh (Firmware Error or Progress) | 02h (System Firmware Progress, entry) | 40h/08h | 11d (Add-in board) |
| Starting OS boot process (e.g. preparing to issue Int 19h) | 0Fh (Firmware Error or Progress) | 02h (System Firmware Progress, entry) | 40h/13h | 0 (Unspecified) |
| Starting secondary processor(s)' initialization | 0Fh (Firmware Error or Progress) | 02h (System Firmware Progress, entry) | 40h/03h | 3 (Processor) |

### 3.1.5.4 OS Events

This table describes the *Specific Trap Field* values for some OS events. The variable-bindings *Entity* field for each of these traps is 35d (OS) and the *Event Type* field for each is 6Fh (Sensor specific). A timer-expiration event can generally be considered to indicate a hang associated with the software that was running when the expiration occurred.

| Description | Event Sensor Type | Event Offset | Event Data Fields |
|---|---|---|---|



Lenovo
Ex. 1037 - Page 20

| Description | Event Sensor Type | Event Offset | Event Data Fields |
|---|---|---|---|
| OS Boot Failure | 23h (Watchdog 2) | 00h (Timer Expired) | ED1 40h to indicate that the ED2 field contains “interesting” data<br>ED2 03h to identify that no interrupt was generated and that the timer was monitoring an OS load process at the time of expiration |
| OS Hung | 20h (OS Critical Stop) | 10h (Run-time stop) | N/A |

### 3.1.5.5 System Heartbeat

ASF-enabled systems can provide the capability to send a periodic message indicating that the system is still present. A timer present in the alert-sending device controls the frequency of this message, which is referred to as a system heartbeat. The timer’s period is typically programmable, but the period must not exceed 10 minutes. The recommended default is one heartbeat per minute, and the alert-sending device’s OS-present configuration software provides methods through which to disable the heartbeat transmission and set the enabled heartbeat’s frequency timer. *System Heartbeat* messages are sent as single PET frames, and are not re-transmitted.

If an alert-sending device supports this message, the following event-specific PET fields must be used:

| Event Sensor Type | Event Type | Event Offset | Entity |
|---|---|---|---|
| 25h (Entity presence) | 6Fh (Sensor specific) | 00h (Device Present) | 23d (System Chassis) |

### 3.1.5.6 System Boot Failure

A configured, ASF-enabled alert-sending device transmits a system boot failure alert if the system firmware does not issue an SMBus *Stop Watchdog Timer* command within the client’s *Minimum Watchdog Reset Time* (see 4.1.2.1). The alert-sending device starts its timer on the managed client’s transition to the point where main PCI power is good. Following are the event-specific PET fields associated with this alert:

| PET Field | Value |
|---|---|
| Event Sensor Type | 23h (Watchdog 2) |
| Event Type | 6Fh (Sensor specific) |
| Event Offset | 00h (Timer Expired) |
| Event Severity | 10h (Critical) |
| Sensor Device | FFh (Unspecified) |
| Sensor Number | FFh (Unspecified) |
| Entity | 00h (Unspecified). This value is used since the root cause of the failure associated with the timer’s expiration is not known at the time of the alert. |
| Entity Instance | 00h (Unspecified) |
| Event Data | 4006h (ED2 valid, system boot failure). |



Lenovo
Ex. 1037 - Page 21

## 3.2 Remote Management and Control Protocol (RMCP)

RMCP (Remote Management and Control Protocol) is a UDP (User Datagram Protocol) based protocol used for client control functions when a managed client is in an *OS-absent* state. In this environment, RMCP packets are exchanged between a management console and a managed client; typical client control functions include operations such as reset, power-up, and power-down. The protocol is intentionally simple, to enable alert-sending devices' firmware to easily parse the information in the absence of OS-present drivers.

A management console uses RMCP methods as part of a two-tiered approach to managing client systems. The console should always use OS-present methods as the primary method to power down or reset a managed client, so that any shutdown operation is handled in an orderly fashion. Consoles should employ RMCP methods only if the managed client fails to respond to the OS-present methods, since the hardware-based RMCP methods could result in loss of data on the client system.

An ASF-aware management console determines a managed client's ASF-RMCP capabilities by issuing the following commands:

1) The console issues a *Presence Ping* command directed to the managed client; the ASF-aware client then …
   a) … acknowledges receipt of the RMCP message, so long as the RMCP version in the message's header is a version supported by the client.
   b) … responds with a *Presence Pong* message, setting the *Supported Entities* field (bits 3:0) to indicate its ASF version.
2) The console issues a *Capabilities Request* message to the managed client; the client …
   a) … acknowledges receipt of the RMCP message, so long as the RMCP version in the message's header is a version supported by the client.
   b) … responds with a *Capabilities Response* message, returning the system capabilities previously configured into the alert-sending device's non-volatile storage.

At this point, the console knows that the managed client is ASF-aware and which of the optional ASF-RMCP 'Set' commands are supported by the client — the client will acknowledge receipt of any unsupported command, but will disregard the command contents.

### *3.2.1 RMCP UDP Port Numbers*

There are two UDP ports reserved for RMCP use — port numbers 026Fh (623 decimal) and 0298h (644 decimal):

| ***Port*** | ***Usage*** |
|---|---|
| 026Fh | This port is used for all communications for ASF version 1.0. |
| 0298h | Reserved for future definition by this specification. |

Each of these ports is a destination port on the managed client.

### *3.2.2 RMCP Packet Format*

The following table describes the complete network frame that includes RMCP, using an 802.3 Ethernet frame as the example. RMCP is media independent and, depending on the medium, the associated header fields will be different. All the data fields specified in this message are in *network byte order*. This specification defines the format of the shaded fields in the frame described below.

Within the table that follows, a *Contents* field that has non-blank *Value* field defines the method through which the following frame contents are determined. For example, if the *MAC Header*'s *Frame Type* is set to 0800h then the frame element that follows the *MAC Header* is an *IP Header*.

| Contents | Type | Offset | Value | |
|---|---|---|---|---|



Lenovo
Ex. 1037 - Page 22

| Contents | Type | Offset | Value | |
|---|---|---|---|---|
| Destination Address | 6 bytes | 00h | | MAC Header |
| Source Address | 6 bytes | 06h | | |
| Frame Type | 2 bytes | 0Ch | 0800h | |
| Version and Header Length | 1 Byte | 0Eh | | IP Header |
| Service Type | 1 Byte | 0Fh | | |
| Total Length | 2 Bytes | 10h | | |
| Identification | 2 Bytes | 12h | | |
| Flags & Fragment Offset | 2 Bytes | 14h | | |
| Time to Live | 1 Byte | 16h | | |
| Protocol | 1 Byte | 17h | 11h | |
| Header Checksum | 2 Bytes | 18h | | |
| Source IP Address | 4 Bytes | 1Ah | | |
| Destination IP Address | 4 Bytes | 1Eh | | |
| Source Port | 2 Bytes | 22h | | UDP Header |
| Destination Port | 2 Bytes | 24h | 026Fh | |
| UDP Length | 2 Bytes | 26h | | |
| UDP Checksum | 2 Bytes | 28h | | |
| Version | 1 Byte | 2Ah | 06h (ASF) | RMCP Header |
| Reserved | 1 Byte | 2Bh | | |
| Sequence Number | 1 Byte | 2Ch | | |
| Class of Message | 1 Byte | 2Dh | 06h (ASF) | |
| IANA Enterprise Number | 4 bytes | 2Eh | 4542 (ASF) | ASF RMCP Data |
| Message Type | 1 Byte | 32h | | |
| Message Tag | 1 Byte | 33h | | |
| Reserved | 1 Byte | 34h | | |
| Data Length | 1 Byte | 35h | | |
| Data | Variable | 36h | | |
| CRC | 4 Bytes | | | |

The RMCP packet (the shaded area in the table above) is divided into two basic components: its header and its associated data. Interpretation of the *RMCP Data* format depends on the value present in the RMCP header's *Class of Message* field. While the RMCP header is extensible to incorporate any OEM-defined variations, this specification defines only the *RMCP Data* formats for messages with *Class of Message* set to ASF (6).

An ASF-RMCP packet's *Data* block is also extensible: the IANA Enterprise Number defines the interpretation of the remaining fields within that block. This specification defines commands and data formats when the ASF-RMCP *Data* block's *IANA Enterprise Number* is set to 4542 (the IANA-assigned value for ASF). Any other value in that field identifies an OEM-specific ASF-RMCP command extension; the *Data* block's *IANA Enterprise Number* is set to the OEM's IANA-assigned value.

### 3.2.2.1 RMCP Acknowledge

This message is used to acknowledge receipt of an RMCP packet, only if the recipient supports the specific RMCP version in that packet's header, the packet is not itself an *RMCP Acknowlege*, and the header's *Sequence Number* is other than FFh (no acknowledge). The acknowledge message indicates *only* that the message has been *received*; it does not indicate that any action has been completed.



Lenovo
Ex. 1037 - Page 23

In a typical interaction, the recipient of an RMCP packet acknowledges the sender by returning the received RMCP header with the MSB (most significant bit) of the "Class of Message" field set to indicate an acknowledgement. Specifically, the recipient returns to the sender the first three bytes from the received RMCP header (version, sequence number and reserved fields) with the fourth byte modified to indicate that the packet represents an RMCP Acknowledge. The following table describes the acknowledge's format:

| Contents | Type | Offset | Value | |
|---|---|---|---|---|
| Version | 1 byte | 00h | Copied from the received message | RMCP Header for Acknowledge |
| Reserved | 1 byte | 01h | Copied from the received message. | |
| Sequence Number | 1 byte | 02h | Copied from the received message. | |
| Class of Message | 1 byte | 03h | **Bit(s)** **Description**<br>7 Set to 1 to indicate acknowledgement.<br>6:0 Copied from the header of the received message. | |

***Notes***:

1. The *RMCP Acknowledge* does not have an RMCP *Data* block; only the RMCP Header is returned.
2. An *RMCP Acknowledge* must not, itself, be acknowledged.

### 3.2.2.2 RMCP Header

The RMCP header fields are as specified in the following table. Sequence numbers are used to ensure reliability over an inherently unreliable protocol (like UDP) and facilitate message ordering and recognition of identical messages. The *Sequence Number* is incremented each time a unique message is sent from the same source, e.g. a management console or a client system. When the message initiator retries a message, possibly due to a missing RMCP Acknowledge, the initiator sends the exact message of the original transmission with the same *Sequence Number;* this allows the initiator to match an RMCP message to its associated acknowledgement.

| Contents | Type | Offset | Value | |
|---|---|---|---|---|
| Version | 1 byte | 00h | This field identifies the version of the RMCP header. A value of 06h in the field indicates RMCP v1.0.<br>0-5 Legacy RMCP<br>6 ASF RMCP Version 1.0<br>7- 255 Reserved for future definition by this specification. | RMCP Header |
| Reserved | 1 byte | 01h | Reserved for future definition by this specification, set to 00h. | |
| Sequence Number | 1 byte | 02h | The sequence number associated with the message. Sequence numbers should increase monotonically from each RMCP message source, in the range 0 to 254, and then rollover back to 0. A *Sequence Number* field of 255 (FFh) has special meaning — it identifies that the receiver of the message *must not* provide acknowledgement. | |



Lenovo
Ex. 1037 - Page 24

| Contents | Type | Offset | Value | |
|---|---|---|---|---|
| Class of Message | 1 byte | 03h | This field identifies the format of the messages that follow this header. All messages of class ASF (6) conform to the formats defined in this specification.<br>Bit(s) Description<br>7 Message Type. Set to 1 to indicate an Acknowledge message (see 3.2.2.1); set to 0 otherwise.<br>6:4 Reserved for future definition by this specification, set to 000b.<br>3:0 Message Class. Set to one of the following values:<br>0-5 Reserved<br>6 ASF<br>7 IPMI[1]<br>8 OEM-defined<br>9-15 Reserved for future definition by this specification. | |

### 3.2.2.3 ASF RMCP Data

All ASF-RMCP messages have the same *Data* block format, but the interpretation of the fields within the *Data* block is dependent on the value present in the first field: the *IANA Enterprise Number*. OEMs and ISVs can provide extensions to the ASF-RMCP command set by setting the field to their IANA-assigned enterprise number.

| Contents | Type | Offset | Value | |
|---|---|---|---|---|
| IANA Enterprise Number | 4 bytes | 00h | IANA-assigned Enterprise Number associated with the entity that defines the *Message Type* values and *Data* field format for the message; set to 4542 for ASF-RMCP messages defined by this specification. The number is transmitted in network byte order. | General RMCP ASF Data |
| Message Type | 1 byte | 04h | Defined by the entity associated with the value in the previous field. | |
| Message Tag | 1 byte | 05h | This field is used to match request-response pairs. | |
| Reserved | 1 byte | 06h | Reserved for future definition by this specification, set to 0. | |
| Data Length | 1 byte | 07h | Identifies the number of bytes present in the *Data* field | |
| Data | N bytes | 08h | Data associated with a particular *Enterprise Number* and *Message Type*, number of bytes is specified by *Data Length*. | |

This specification defines the interpretation of the ASF-RMCP *Data* block when *IANA Enterprise Number* field is set to 4542 (ASF IANA), see 3.2.3 on page 23 for more information:

| Contents | Type | Offset | Value | |
|---|---|---|---|---|
| IANA Enterprise Number | 4 bytes | 00 | This field contains the 4-byte value 4542 or 11BEh, the number assigned to ASF by the Internet Assigned Numbers Authority (IANA). The number is transmitted in network byte order. | |

[1] The format and specification of messages under this class will be specified in the IPMI (Intelligent Platform Management Interface) specifications. Information on IPMI can be obtained from the IPMI web site: http://developer.intel.com/design/servers/ipmi



Lenovo
Ex. 1037 - Page 25

| Contents | Type | Offset | Value | |
|---|---|---|---|---|
| Message Type | 1 byte | 04h | ***00h:0Fh Reserved***<br>***10h:3Fh "Set" commands***<br>10h Reset, see page 23<br>11h Power-up, see page 23<br>12h Unconditional Power-down, see page 25<br>13h Power Cycle Reset, see page 23<br>***40h:7Fh Response or "Get Response" commands***<br>40h Presence Pong, see page 26<br>41h Capabilities Response, see page 26<br>42h System State Response, see page 27<br>***80h:BFh Request or "Get" commands***<br>80h Presence Ping<br>81h Capabilities Request<br>82h System State Request<br>All other values are reserved for future definition by this specification. | Standard RMCP ASF Data |
| Message Tag | 1 byte | 05h | This 1-byte field is used to match request-response pairs. This value is copied into the response message when one is generated in a request-response interaction, e.g. the *Presence Ping/Presence Pong* pair. When a duplicate message is received, i.e. one with the same Message Tag, the consumer of the message determines whether the message is accepted or rejected. For example, an alert-sending device might be designed to respond to all Presence Ping messages received, or to keep track of recent Presence Ping messages and only respond to those with unique Message Tag values. See below for more information.<br>Note: A value of 255 (FFh) indicates that the associated message is not a request-response type message. | |
| Reserved | 1 byte | 06h | Reserved for future definition by this specification, set to 0. | |
| Data Length | 1 byte | 07h | This 1-byte field contains the byte length of the message's variable-length *Data* field. | |
| Data | N bytes | 08h | Data associated with a particular *Message Type*, number of bytes is specified by *Data Length*. | |

## Using the *Message Tag* Field

Many of the ASF-RMCP messages are of the request/response type:

- A Presence Ping sent from a management console requests that the client respond with a Presence Pong
- A Capabilities Request from a management console requests that the client respond with a Capabilities Response
- A System State Request from a management console requests that the client respond with a System State Response.

For each of these message pairs, the ASF-RMCP *Data* block's *Message Tag* field provides a method to bind a response to its associated request.

For example, a management console sends a *Presence Ping* with the *Message Tag* field set to 12h to a managed client. The client's alert-sending device copies the *Message Tag* field value from the message received into the associated *Presence Pong* response prior to transmitting that message. When the management console receives the *Presence Pong*, the console can quickly map the message to its associated *Presence Ping* by matching the *Message Tag* fields.



Lenovo
Ex. 1037 - Page 26

### *3.2.3 ASF RMCP Message Types*

This section defines message data formats for the *standard* RMCP "ASF" class, i.e. the IANA Enterprise Number in the RMCP Data section is 4542. This specification defines the *Data* portion of each message; OEMs and ISVs can provide extensions using the *general* RMCP "ASF" class, but cannot extend the standard messages' packet size.

#### 3.2.3.1 Reset (10h), Power-up (11h), and Power Cycle Reset (13h)

The management console can send messages to cause the managed client to perform a hard-reset, power up, or power cycle reset. See section 6.3.3 for detailed descriptions and definitions of these remote control functions.

Each of these message types can optionally include *Boot Options* in its variable data; the options define operations the managed client performs with the boot initiated by the ASF-RMCP message. The RMCP packet's *Data Length* value indicates the presence (0Bh or greater) or absence (00h) of the options. The *Boot Options* contain a bit-mask of standard options and a Special Command with an optional parameter.

If the managed client doesn't support the message (as indicated on the presumed, previous response to the console's *Capabilities Request* message), the alert-sending device issues an RMCP *Acknowledge* and otherwise disregards the message. Any message disregarded in this fashion has no effect on the alert-sending device's response to a subsequently issued SMBus *Get Boot Options* message (see 5.2 for these messages' definitions). Otherwise, the alert-sending device records the *Boot Options* and *Special Command* values and reports those values in response to subsequently issued SMBus *Get Boot Options* messages until either

1. The alert-sending device receives another RMCP message, supported by the system. This message's *Boot Options* and *Special Command* values replace the previously recorded values.
2. The alert-sending device receives an SMBus *Boot Options Clear* message (see 5.2.2 for details). Until the alert-sending device receives another RMCP message with *Boot Options* values, the device responds with the No Boot Options response to any SMBus *Get Boot Options* messages.

When the *Boot Options* are present, the message's *Data* field is organized as follows:

| Boot Options Data Byte | Field | Description |
|---|---|---|
| 1-4 | IANA Enterprise Number | IANA-assigned Enterprise Number — ASF (4542) or OEM specific — that defines the interpretation of the OEM *Special Command* values and their associated *Special Command Parameters,* and the *OEM Parameters* fields.<br>***Note***: This specification defines the interpretation of the *Boot Options Bit Mask* field, regardless of the *Enterprise Number* value. |
| 5 | Special Command | Defines commands to be processed by the managed client on the boot initiated by the ASF-RMCP message. See *Special Command Definitions* below for more detail. |
| 6-7 | Special Command Parameter | Defines a command parameter to augment the *Special Command*. See *Special Command Definitions* below for more detail. Parameter byte 1 is present in Data Byte 6; parameter byte 2 is present in Data Byte 7. |
| 8-9 | Boot Options Bit Mask | Defines a standard set of firmware operations. See *Boot Options Bit Mask* below for more detail. Boot Options Bit Mask Byte 1 is present in Data Byte 8, Boot Options Bit Mask Byte 2 is present in Data Byte 9, and so on. |



Lenovo
Ex. 1037 - Page 27

| Boot Options Data Byte | Field | Description |
|---|---|---|
| 10-11 | OEM Parameters | Defines parameters that further augment the Special Command definition; the entity associated with the Enterprise Number defines the interpretation of these fields. These fields have no meaning when the Enterprise Number is 4542 (ASF). |

## Special Command Definitions

ASF defines the following *Special Command* values, present as byte 5 of the *Boot Options*; the meaning applies only when the IANA Enterprise Number specified in the *Boot Options* is the value 4542 (ASF).

| Value | Description |
|---|---|
| 00h | **NOP**. No additional special command is included; the *Special Command Parameter* has no meaning. |
| 01h | **Force PXE Boot**. The *Special Command Parameter* can be used to specify a PXE parameter. When the parameter value is 0, the system default PXE device is booted. All other values for the PXE parameter are reserved for future definition by this specification. |
| 02h | **Force Hard-drive Boot**. The *Special Command Parameter* identifies the boot-media index for the managed client. When the parameter value is 0, the default hard-drive is booted, when the parameter value is 1, the primary hard-drive is booted; when the value is 2, the secondary hard-drive is booted – and so on. |
| 03h | **Force Hard-drive Safe Mode Boot.** The *Special Command Parameter* identifies the boot-media index for the managed client. When the parameter value is 0, the default hard-drive is booted, when the parameter value is 1, the primary hard-drive is booted; when the value is 2, the secondary hard-drive is booted – and so on. |
| 04h | **Force Diagnostic Boot.** The *Special Command Parameter* can be used to specify a diagnostic parameter. When the parameter value is 0, the default diagnostic media is booted. All other values for the diagnostic parameter are reserved for future definition by this specification. |
| 05h | **Force CD/DVD Boot.** The *Special Command Parameter* identifies the boot-media index for the managed client. When the parameter value is 0, the default CD/DVD is booted, when the parameter value is 1, the primary CD/DVD is booted; when the value is 2, the secondary CD/DVD is booted – and so on. |
| 06h to 0BFh | Reserved for future definition by this specification. |
| 0C0h to 0FFh | OEM command values; the interpretation of the *Special Command* and associated *Special Command Parameters* is defined by the entity associated with the Enterprise ID. |

## Boot Options Bit Mask

The following table identifies the bits in the Boot Options Bit Mask, present in the Boot Options as Data Bytes 8 through 11.

| Boot Options Data Byte | Boot Options Bit Mask Byte | Bit Number | Boot Options Bit Mask Description |
|---|---|---|---|
| 8 | 1 | 7 | Reserved, set to 0b. |
| | | 6 | *Lock Sleep Button*. When set to 1b, the managed client's firmware disables the sleep button operation for the system, normally until the next boot cycle. Client instrumentation might provide the capability to re-enable the button functionality without rebooting. |



Lenovo
Ex. 1037 - Page 28

| Boot Options Data Byte | Boot Options Bit Mask Byte | Bit Number | Boot Options Bit Mask Description |
|---|---|---|---|
| | | 5 | *Lock Keyboard*. When set to 1b, the managed client's firmware disallows keyboard activity during its boot process. Client instrumentation or OS drivers might provide the capability to re-enable the keyboard functionality without rebooting. |
| | | 4:3 | Reserved, set to 00b. |
| | | 2 | *Lock Reset Buttons*. When set to 1b, the managed client's firmware disables the reset button operation for the system, normally until the next boot cycle. Client instrumentation might provide the capability to re-enable the button functionality without rebooting. |
| | | 1 | *Lock Power Button*. When set to 1b, the managed client's firmware disables the power button operation for the system, normally until the next boot cycle. Client instrumentation might provide the capability to re-enable the button functionality without rebooting. |
| | | 0 | Reserved, set to 0b. |
| 9 | 2 | 7 | *Configuration Data Reset*. When set to 1b, the managed client's firmware resets its non-volatile configuration data to the client's Setup defaults prior to booting the client. |
| | | 6:5 | *Firmware Verbosity*. When set to a non-zero value, controls the amount of information the managed client writes to its local display:<br>00b System default<br>01b Quiet, minimal screen activity<br>10b Verbose, all messages appear on the screen<br>11b Screen blank, no messages appear on the screen. |
| | | 4 | *Force Progress Events*. When set to 1b, the managed client's firmware transmits all progress PET events to the alert-sending device. This option is usually used to aid in fail-to-boot problem determination. |
| | | 3 | *User Password Bypass*. When set to 1b, the managed client's firmware boots the system and bypasses any user or boot password that might be set in the system. This option allows a system administrator to, for example, force a system boot via PXE in an unattended manner. |
| | | 2:0 | Reserved, set to 000b. |
| | | | |
| | | | |

### 3.2.3.2 Unconditional Power-Down (12h)

The management console sends this RMCP message to the managed client to cause the client to perform an unconditional power-down. See section 6.3.3 for a detailed description and definition of this remote control function.

*Data Length* for the sent message is set to 00h, no additional data is sent.

**Note**: Since this message does not result in an ASF-RMCP-initiated managed client boot, no *Boot Options* specification is supported.



Lenovo
Ex. 1037 - Page 29

### 3.2.3.3 Presence Pong (40h)

An ASF managed client sends this message — in response to a management console's *Presence Ping (80h)* RMCP message — to identify the presence of an ASF-RMCP-aware managed client on the network. The *Message Tag* value of the *Presence Ping*'s RMCP Header is copied to this message's *Message Tag* field. The format of this message's *Data* section is as follows:

| Data Byte(s) | Field | Description |
|---|---|---|
| 1-4 | IANA Enterprise Number[2] | If no OEM-specific capabilities exist, this field contains the ASF IANA (4542) and the OEM-defined field is set to all zeroes (00000000h). Otherwise, this field contains the OEM's IANA Enterprise Number and the OEM-defined field contains the OEM-specific capabilities.<br>***Note***: Regardless of the value in the IANA Enterprise Number, this specification defines the interpretation of data bytes 9 and higher. |
| 5-8 | OEM-defined[2] | OEM defined fields. |
| 9 | Supported entities | **Bit(s)** **Value/Meaning**<br>7 Set to 1 if IPMI is supported.<br>6:4 Reserved for future definition by this specification, set to 000b.<br>3:0 0000b Reserved<br>0001b ASF, Version 1.0<br>Others Reserved for future definition by this specification. |
| 10 | Supported interactions | **Bit(s)** **Value/Meaning**<br>7:0 Reserved for future definition by this specification, set to 00000000b |
| 11-16 | Reserved | Reserved for future definition by this specification, set to all zeros. |

### 3.2.3.4 Capabilities Response (41h)

An ASF managed client sends this message — in response to a management console's *Capabilities Request (81h)* RMCP message — to describe the client system's ASF capabilities. The *Message Tag* value of the *Capability Request*'s RMCP Header is copied to this message's *Message Tag* field. The capabilities described are the least common denominator of the capabilities of the alert-sending device, the motherboard, the firmware, and the supporting software. This message's *Data* section is formatted as follows:

| Data Byte(s) | Field | Description |
|---|---|---|
| 1-4 | IANA Enterprise Number[2] | If no OEM-specific capabilities exist, this field contains the ASF IANA (4542) and the *OEM-defined* field is set to all zeroes (00000000h). Otherwise, this field contains the OEM's IANA Enterprise Number and the *OEM-defined* field contains the OEM-specific capabilities.<br>***Note***: Regardless of the value in the IANA Enterprise Number, this specification defines the interpretation of data bytes 9 and higher. |
| 5-8 | OEM defined[2] | OEM defined fields. |
| 9-10 | Special Commands Supported | Defines the standard set of ASF-RMCP Special Commands supported by the managed client. See *Special Commands Bit Mask* for detailed information. |
| 11 | System Capabilities Supported | Defines the standard set of system capabilities supported by the managed client system. See *System Capabilities Bit Mask* for detailed information. |

[2] This field can contain OEM-defined values; the method through which these values are communicated to an alert-sending device is left to the device manufacturer.



Lenovo
Ex. 1037 - Page 30

| Data Byte(s) | Field | Description |
|---|---|---|
| 12-15 | System Firmware Capabilities Supported | Defines the standard set of firmware capabilities supported by the managed client. See *System Firmware Capabilities Bit Mask* for detailed information. |
| 16 | Reserved | Reserved for future definition by this specification; set to 0 |

## Special Commands Bit Mask

The following table describes the special commands bit mask.

| Response Data Byte | Bit Mask Byte | Bit(s) | Meaning |
|---|---|---|---|
| 9 | 1 | 7:0 | Reserved to identify support for ASF-RMCP *Special Commands* defined by a future version of this specification, set to 00h. |
| 10 | 2 | 7:5 | Reserved to identify support for ASF-RMCP *Special Commands* defined by a future version of this specification, set to 000b. |
| | | 4 | Supports Force CD/DVD Boot command, if set to 1b.[3] |
| | | 3 | Supports Force Diagnostic Boot command, if set to 1b.[3] |
| | | 2 | Supports Force Hard-drive Safe-mode Boot command, if set to 1b.[3] |
| | | 1 | Supports Force Hard-drive Boot command, if set to 1b.[3] |
| | | 0 | Supports Force PXE Boot command, if set to 1b. |

## System Capabilities Bit Mask

The following table describes the system capabilities bit mask.

| Response Data Byte | Bit Mask Byte | Bit(s) | Meaning |
|---|---|---|---|
| 11 | 1 | 7 | Supports Reset, if 1b |
| | | 6 | Supports Power-Up, if 1b |
| | | 5 | Supports Power-Down, if 1b |
| | | 4 | Supports Power Cycle Reset, if 1b |
| | | 3:0 | Reserved for future assignment by this specification, set to 0000b. |

## System Firmware Capabilities Bit Mask

These bit-flags identify the remote-control features supported by the system firmware. These bits are very similar to the *Boot Options* bit mask in the RMCP boot-related messages; see 3.2.3.1. They are slightly different because this format uses a capability bit for each encoding in the RMCP command to identify individual option support.

***Note***: These capabilities reflect the RMCP support provided by the managed client (as identified via its ACPI implementation, see *4.1.2.6 ASF_RMCP*), and its alert-sending device.

| Response Data Byte | Bit Mask Byte | Bit(s) | Meaning |
|---|---|---|---|
| 12 | 1 | 7 | Reserved for future assignment by this specification, set to 0b. |
| | | 6 | Supports Sleep Button Lock, if 1b |
| | | 5 | Supports Lock Keyboard, if 1b |
| | | 4:3 | Reserved for future assignment by this specification, set to 00b. |

[3] Many of these choices are outside the realm of the managed client's firmware and require support from either the OS or boot-manager to accomplish.



Lenovo
Ex. 1037 - Page 31

| Response Data Byte | Bit Mask Byte | Bit(s) | Meaning |
|---|---|---|---|
| | | 2 | Supports Reset Button Lock, if 1b |
| | | 1 | Supports Power Button Lock, if 1b |
| | | 0 | Supports Firmware Verbosity/Screen Blank, if 1b |
| 13 | 2 | 7 | Supports Configuration Data Reset, if 1b |
| | | 6 | Supports Firmware Verbosity/Quiet, if 1b |
| | | 5 | Supports Firmware Verbosity/Verbose, if 1b |
| | | 4 | Supports Forced Progress Events, if 1b |
| | | 3 | Supports User Password Bypass, if 1b |
| | | 2:0 | Reserved for future assignment by this specification, set to 000b. |
| 14 | 3 | 7:0 | Reserved for future assignment by this specification, set to 00h. |
| 15 | 4 | 7:0 | Reserved for future assignment by this specification, set to 00h. |

### 3.2.3.5 System State Response (42h)

An ASF managed client sends this message — in response to a management console's *System State Request (82h)* RMCP message — to identify the state of the managed client. The *Message Tag* value of the *System State Request*'s RMCP Header is copied to this message's *Message Tag* field. The format of the message's *Data* section is as follows:

| Data Bytes | Field | Description |
|---|---|---|
| 1 | System State[4] | Bit(s) Value/Meaning<br>7:4 Reserved for future definition, set to 000b.<br>3:0 0000b S0 / G0 "working"<br>0001b S1 "sleeping with system h/w & processor context maintained"<br>0010b S2 "sleeping, processor context lost"<br>0011b S3 "sleeping, processor & h/w context lost, memory retained."<br>0100b S4 "non-volatile sleep / suspend-to disk"<br>0101b S5 / G2 "soft-off"<br>0110b S4 / S5 soft-off, particular S4/S5 state cannot be determined<br>0111b[5] G3 / Mechanical Of f<br>1000b Sleeping in an S1, S2, or S3 states (used when particular S1, S2, S3 state cannot be determined), or Legacy SLEEP state.<br>1001b G1 sleeping (S1-S4 state cannot be determined)<br>1010b[5] S5 entered by override (e.g. 4-second power button override)<br>1011b Legacy ON state (e.g. non-ACPI OS working state)<br>1100b Legacy OFF state (e.g. non-ACPI OS off state)<br>1110b Unknown<br>1111b Reserved for future definition |

[4] In some implementations, the system state reported by the alert-sending device may be a "best guess" or a "last known" reporting mechanism, because the managed client's firmware might not be able to program the system state for various reasons. For example, it is conceivable that the state was entered by hardware and software did not have a chance to program the state information, or software pre-programs the system state, but the next state was not reached.

[5] This state might not be reported either because (a) a software entity (e.g. BIOS) is responsible for programming the device and the state is initiated by hardware, or (b) the hardware is not powered in the state and incapable of responding.



Lenovo
Ex. 1037 - Page 32

| Data Bytes | Field | Description |
|---|---|---|
| 2 | Watchdog State | **Bit(s)** **Value/Meaning**<br>7:1 Reserved for future definition by this specification, set to 0000000b<br>0 WDE (Watchdog Timer Expired)<br>1b = Indicates that the ASF alert-sending device's Watchdog Timer has expired and has not been stopped by a Stop Watchdog Timer command.<br>0b = Indicates that the ASF alert-sending device's Watchdog Timer is currently not expired because (a) it has not yet been started since power-on reset, (b) it has been started and is running but not expired yet, or (c) it has been stopped.<br>This bit becomes set when the Watchdog Timer expires after a Start Watchdog Timer command is issued and the timer expires. Subsequent Start Watchdog Timer or Stop Watchdog Timer commands or an alert-sending device power-on reset will clear this status to 0b. |
| 3-4 | Reserved | Reserved for future definition by this specification, set to 0000h. |

### 3.2.3.6 Presence Ping (80h)

The ASF-aware management console sends this RMCP message to the managed client to request a client to respond with a *Presence Pong (40h)* message — if the client so responds, it signifies that it is also ASF-aware. *Data Length* for the sent message is set to 00h, no additional data is sent.

### 3.2.3.7 Capabilities Request (81h)

The management console sends this RMCP message to the managed client to request the client to respond with a *Capabilities Response (41h)* message. *Data Length* for the sent message is set to 00h, no additional data is sent.

### 3.2.3.8 System State Request (82h)

The management console sends this RMCP message to the managed client to request the client to respond with a *System State Response (42h)* message. *Data Length* for the sent message is set to 00h, no additional data is sent.



Lenovo
Ex. 1037 - Page 33

### 3.2.4 RMCP Usage Scenarios

The following flowchart describes the process used by the RMCP command initiator, e.g. the management console for the *Capabilities Request* message, to determine whether a response to a previously sent message was received.

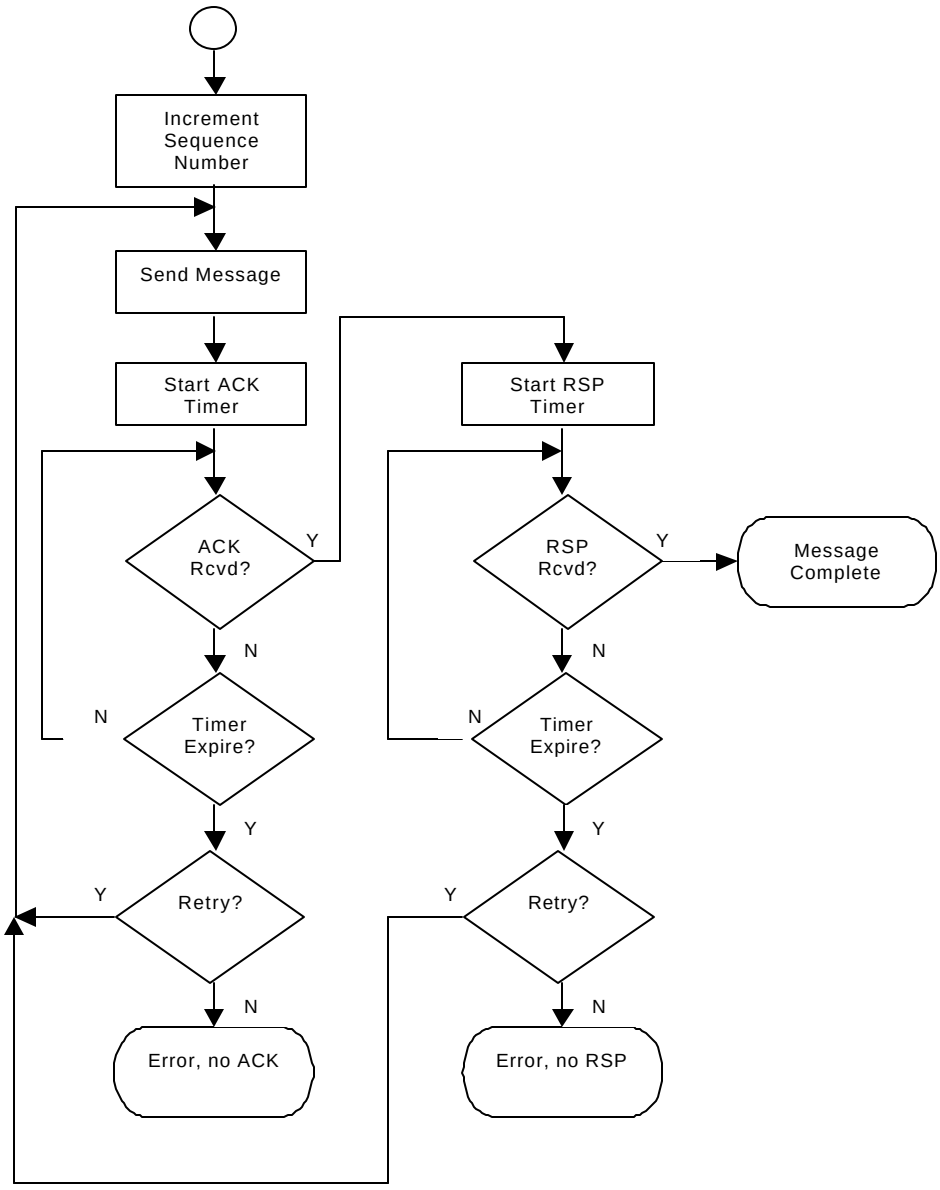


### Interactions with no packet loss

The description that follows illustrates the RMCP Header and RMCP Data fields in a console-to-client communication where no messages are lost.

1. The management console sends an ASF-RMCP "Request" message

| RMCP Header | | | | ASF-RMCP Data | | | | | | | |
|---|---|---|---|---|---|---|---|---|---|---|---|
| Vers | Rsvd | Seq# | Class | IANA Enterprise Number | | | | Type | Tag | Rsvd | Len |
| 06h | 00h | 05h | 06h | 00h | 00h | 11h | BEh | xx | 08h | xx | xx |



Lenovo
Ex. 1037 - Page 34

2. The managed client responds with an RMCP ACK, returning only an RMCP Header. Note that all values are copied from the “Request” message’s RMCP header, with the “ACK” bit set in the fourth byte.

| RMCP Header | | | |
|---|---|---|---|
| Vers | Rsvd | Seq# | Class |
| 06h | 00h | 05h | 86h |

3. The managed client responds with the associated ASF-RMCP “Response”. Note that the Message Tag value (08h) is copied from the “Request” message.

| RMCP Header | | | | ASF-RMCP Data | | | | | | | |
|---|---|---|---|---|---|---|---|---|---|---|---|
| Vers | Rsvd | Seq# | Class | IANA Enterprise Number | | | | Type | Tag | Rsvd | Len |
| 06h | 00h | 09h | 06h | 00h | 00h | 11h | BEh | xx | 08h | xx | xx |

4. The management console, having received both the ACK and “Response” sends an RMCP ACK, completing the request/response cycle. The RMCP Header is copied from the managed client’s “Response” message, with the “ACK” bit set in byte 4.

| RMCP Header | | | |
|---|---|---|---|
| Vers | Rsvd | Seq# | Class |
| 06h | 00h | 09h | 86h |

## Interactions with some packet loss

1. The description that follows illustrates the RMCP Header and RMCP Data fields in a console-to-client communication where some of the messages are lostThe management console sends an ASF-RMCP “Request” message

| RMCP Header | | | | ASF-RMCP Data | | | | | | | |
|---|---|---|---|---|---|---|---|---|---|---|---|
| Vers | Rsvd | Seq# | Class | IANA Enterprise Number | | | | Type | Tag | Rsvd | Len |
| 06h | 00h | 05h | 06h | 00h | 00h | 11h | BEh | xx | 08h | xx | xx |

2. The management console waits to receive an ACK from the client, but the client never received that “Request” message; the console re-transmits the “Request” message with the same Sequence Number as the original message in step 1.

| RMCP Header | | | | ASF-RMCP Data | | | | | | | |
|---|---|---|---|---|---|---|---|---|---|---|---|
| Vers | Rsvd | Seq# | Class | IANA Enterprise Number | | | | Type | Tag | Rsvd | Len |
| 06h | 00h | 05h | 06h | 00h | 00h | 11h | BEh | xx | 08h | xx | xx |

3. The managed client responds with an RMCP ACK, returning only an RMCP Header. Note that all values are copied from the “Request” message’s RMCP header, with the “ACK” bit set in the fourth byte. The console never receives this ACK.

| RMCP Header | | | |
|---|---|---|---|
| Vers | Rsvd | Seq# | Class |
| 06h | 00h | 05h | 86h |

4. The managed client responds with the associated ASF-RMCP “Response”. Note that the Message Tag value (08h) is copied from the “Request” message.

| RMCP Header | | | | ASF-RMCP Data | | | | | | | |
|---|---|---|---|---|---|---|---|---|---|---|---|
| Vers | Rsvd | Seq# | Class | IANA Enterprise Number | | | | Type | Tag | Rsvd | Len |
| 06h | 00h | 09h | 06h | 00h | 00h | 11h | BEh | xx | 08h | xx | xx |


Lenovo
Ex. 1037 - Page 35

5. The management console waits to receive an ACK from the client, but the ACK is lost; the console (again) re-transmits the “Request” message with the same Sequence Number as the original message in step 1.

| RMCP Header | | | | ASF-RMCP Data | | | | | | | |
|---|---|---|---|---|---|---|---|---|---|---|---|
| Vers | Rsvd | Seq# | Class | IANA Enterprise Number | | | | Type | Tag | Rsvd | Len |
| 06h | 00h | 05h | 06h | 00h | 00h | 11h | BEh | xx | 08h | xx | xx |

6. The managed client responds with an RMCP ACK, returning only an RMCP Header. Note that all values are copied from the “Request” message’s RMCP header, with the “ACK” bit set in the fourth byte.

| RMCP Header | | | |
|---|---|---|---|
| Vers | Rsvd | Seq# | Class |
| 06h | 00h | 05h | 86h |

7. The managed client responds with the associated ASF-RMCP “Response”, possibly with a new Sequence Number. Note that the Message Tag value (08h) is copied from the “Request” message.

| RMCP Header | | | | ASF-RMCP Data | | | | | | | |
|---|---|---|---|---|---|---|---|---|---|---|---|
| Vers | Rsvd | Seq# | Class | IANA Enterprise Number | | | | Type | Tag | Rsvd | Len |
| 06h | 00h | 0Ah | 06h | 00h | 00h | 11h | BEh | xx | 08h | xx | xx |

8. The management console receives the ACK and waits for the “Response” from the client, but the “Response” is lost; the console (again) re-transmits the “Request” message with the same Sequence Number as the original message in step 1.

| RMCP Header | | | | ASF-RMCP Data | | | | | | | |
|---|---|---|---|---|---|---|---|---|---|---|---|
| Vers | Rsvd | Seq# | Class | IANA Enterprise Number | | | | Type | Tag | Rsvd | Len |
| 06h | 00h | 05h | 06h | 00h | 00h | 11h | BEh | xx | 08h | xx | xx |

9. The managed client responds with an RMCP ACK, returning only an RMCP Header. Note that all values are copied from the “Request” message’s RMCP header, with the “ACK” bit set in the fourth byte.

| RMCP Header | | | |
|---|---|---|---|
| Vers | Rsvd | Seq# | Class |
| 06h | 00h | 05h | 86h |

10. The managed client responds with the associated ASF-RMCP “Response”, possibly with a new Sequence Number. Note that the Message Tag value (08h) is copied from the “Request” message.

| RMCP Header | | | | ASF-RMCP Data | | | | | | | |
|---|---|---|---|---|---|---|---|---|---|---|---|
| Vers | Rsvd | Seq# | Class | IANA Enterprise Number | | | | Type | Tag | Rsvd | Len |
| 06h | 00h | 0Bh | 06h | 00h | 00h | 11h | BEh | xx | 08h | xx | xx |

11. The management console, having received both the ACK and “Response” sends an RMCP ACK, completing the request/response cycle. The RMCP Header is copied from the managed client’s “Response” message, with the “ACK” bit set in byte 4.

| RMCP Header | | | |
|---|---|---|---|
| Vers | Rsvd | Seq# | Class |
| 06h | 00h | 0Bh | 86h |



Lenovo
Ex. 1037 - Page 36

### 3.2.5 RMCP Considerations for LAN Alert-sending Devices

For the RMCP protocol to function in an OS-absent state, the alert-sending device must be capable of reporting its “network address / IP address” association to the local router. The ARP (Address Resolution Protocol), defined in [RFC1188], is typically used to accomplish this task.

To guarantee inter-operability, the alert-sending device must:

- Receive ARP Requests and reply with ARP Replies in an OS-absent state.
- Allow ARP Request packets to go to the network software stack in OS-present states.
- Allow ARP Request packets and RMCP packets to cause wake-ups if configured for wake-up in the default configuration.

For Ethernet and Token-ring devices, wake-ups from ARP Requests and RMCP packets are not desired in a managed client because these operations are expected to function in low power sleep states. However, the [NDCPM] requires that wake-up devices support detection of any software programmed packets as well as subsequent wake-up generation. Alert-sending devices that support wake-up generation are expected to meet the [NDCPM] in their default configuration. However, it is recommended that these alert-sending devices and their software provide configuration mechanisms to allow ARP Request and RMCP packets to be blocked from wake-up.

***Note**:* ARP Request packets and IP Directed packets (which include RMCP packets) are standard packet configurations for wake-up in ACPI systems.



Lenovo
Ex. 1037 - Page 37

# 4 Firmware Interfaces

A managed client's ASF configuration and capabilities are reported by the system firmware (or BIOS) via ACPI description tables and control methods and, optionally, as static information stored within an SEEPROM. OS-present software uses this information to customize the system's ASF-aware alert-sending device(s).

An ASF-enabled system firmware provides:

1. An ACPI description table that identifies
   - If present, undiscoverable fixed-address sensor devices in the system and their characteristics
   - The system's ASF capabilities, and system type for use in the Platform Event Trap messages
   - Any legacy sensor-access information, if present in the system.
   - Any remote-control actions supported by the system hardware, and the associated device information.
   - The system's (optional) support for RMCP, and the last RMCP command completed by the system firmware.
2. ACPI Control Methods that identify
   - The methods that provide configuration of the system's (optional) OS Boot Hang watchdog timer.
3. SMBIOS structures that identify
   - The UUID/GUID for use in the Platform Event Trap messages

A managed client might also provide SEEPROM devices that duplicate the static information provided by the ACPI description table.

## 4.1 ACPI Definitions

System firmware identifies the system's ASF support and configuration requirements via ACPI interfaces.

### *4.1.1 Control Methods*

An ASF managed client's firmware uses ACPI control methods (required elements are marked in **bold**) to provide OS-present access to ASF configuration information that is dynamically updateable:

```
Device(ASF) {
    Name(_HID, "ASF0001")       // Hardware ID (PnP ID)
    Method(GPWT, 0) {…}                // ASF Get Power-on Wait Time
    Method(SPWT, 1) {…}                // ASF Set Power-on Wait Time
}
```

ASF-defined object names must follow the ASL naming convention defined in section 16.1.2 of [ACPI]. The *recommended* format for specifying the name of the ASF object is **`Device (ASF)`**

The ASF object utilizes the _HID device identification object, providing 'automatic' enumeration by the ACPI-aware operating system:

**`Name(_HID, "ASF0001")`**

Used to specify the Plug and Play hardware ID for the ASF object



Lenovo
Ex. 1037 - Page 38

***Notes***:

1. If the managed client supports an OS Boot Failure alert (see 3.1.5.4), the system's ACPI implementation includes a Metolious [MTLS] System Hang Watchdog device of type "OS Boot Failure". The control methods associated with that watchdog device provide the OS-present methods through which the watchdog's configuration can be controlled. If multiple alerting devices are present in the system, all devices' watchdog timers are configured in an identical manner by the system firmware prior to the firmware's attempt to boot the operating system.

#### 4.1.1.1 Get Power-on Wait Time (GPWT)

| | | |
|---|---|---|
| **Description:** | Returns the current value of the system's power-on wait time, in seconds. | |
| **Input Argument(s):** | <none> | |
| **Output Argument(s):** | Power-on Wait Time (Integer) | The current system power-on wait time, in seconds. |
| **Notes:** | The system firmware has a single, maximum amount of time that it might wait for an ASF alert-sending device to establish connection with its transport media. For example, an Ethernet device might require additional time from a cold power-on to establish a network connection. Since there might be multiple ASF alert-sending devices in the system, a device's configuration software should first get the current wait time and set a new time only if the device requires more time. See 5.1.5 for more information. | |

#### 4.1.1.2 Set Power-on Wait Time (SPWT)

| | | |
|---|---|---|
| **Description:** | Sets the system's power-on wait time, in seconds. | |
| **Input Argument(s):** | Power-on Wait Time (Integer) | The value, in seconds, that an ASF alert-sending device requires to establish connection with its transport media. |
| **Output Argument(s):** | <none> | |
| **Notes:** | The system firmware has a single, maximum amount of time that it might wait for an ASF alert-sending device to establish connection with its transport media. For example, an Ethernet device might require additional time from a cold power-on to establish a network connection. Since there might be multiple ASF alert-sending devices in the system, a device's configuration software should first get the current wait time and set a new time only if the device requires more time. See 5.1.5 for more information. | |

### *4.1.2 ASF! Description Table*

System firmware identifies the system's ASF support and static configuration using the ACPI System Description Table architecture. A pointer to the ASF-defined ASF! description table appears as one of the entries in the firmware's RSDT (for IA-32 systems) or XSDT (for IA-64 systems). The information presented in this table is static from the reference of the client's last boot.

This table is formatted as a standard ACPI System Description Table Header followed by one or more ASF information records. An information record contains a chained header and its associated data as follows:

| Field | Byte Length | Byte Offset | Description |
|---|---|---|---|



Lenovo
Ex. 1037 - Page 39

| Field | Byte Length | Byte Offset | Description |
|---|---|---|---|
| Type | 1 | 0 | This field identifies the type of data present in the record's *Variable Data* field, as well as an indication as to whether this is the last record in the table:<br>Bit(s) Description<br>7 *Last Record*. If this bit is set to 1b, then the record is the last one present in the ASF! table.<br>6:0 *Record Type*. Identifies the format of the record's Variable Data field, one of:<br>00h ASF_INFO. See section 4.1.2.1.<br>01h ASF_ALRT. See section 4.1.2.2.<br>02h ASF_RCTL. See section 4.1.2.4.<br>03h ASF_RMCP. See section 4.1.2.6.<br>04h ASF_ADDR. See section 4.1.2.7.<br>05h-7Fh Reserved for future definition by this specification |
| Reserved | 1 | 1 | Reserved for future definition by this specification, set to 00h. |
| Record Length | 2 | 2 | Identifies the length of the information record, starting at offset 0. |
| Variable Data | Varies | 4 | Contains the data specified by the *Type* field. |

***Notes***:

1. *Record Type* values of 00h are required for a managed client's ASF configuration.
2. The consumer of this information should make no assumption regarding the order in which the records are specified, i.e. a *Record Type* of 02h could appear in the table prior to a *Record Type* of 00h.

| Field | Byte Length | Byte Offset | Description |
|---|---|---|---|
| *ACPI System Description Table Header* | | | |
| Signature | 4 | 0 | 'ASF!'. Signature for the ASF Description Table. |
| Length | 4 | 4 | The length of the table, in bytes, starting at offset 0. |
| Revision | 1 | 8 | The revision of the structure, and the version of the ASF specification supported by the system. The value is stored as a BCD (binary coded decimal) value. For ASF version 1.0, the value is 10h. |
| Checksum | 1 | 9 | The entire table, including the checksum field, must sum to zero to be considered valid by the information consumer. |
| OEMID | 6 | 10 | An OEM-supplied string that identifies the OEM. |
| OEM Table ID | 8 | 16 | For this table, the value is the manufacturer model ID. |
| OEM Revision | 4 | 24 | An OEM-supplied revision number of this table. Larger numbers are assumed to be newer revisions. |
| Creator ID | 4 | 28 | Vendor ID of the utility that created this table. For tables containing Definition Blocks, this is the ID for the ASL Compiler. |
| Creator Revision | 4 | 32 | Revision of the utility that created the table. For tables containing Definition Blocks, this is the revision for the ASL Compiler. |
| *ASF-specified data fields* | | | |
| Information Record #1 | Varies | 36 | Contains the first (or only) ASF Information record for the managed client's implementation. |
| … | | | |



Lenovo
Ex. 1037 - Page 40

| Field | Byte Length | Byte Offset | Description |
|---|---|---|---|
| Information Record #n | Varies | Varies | Contains the last ASF Information Record for the managed client's implementation, with the *Last Record* bit of the *Type* field set to 1b. |

#### 4.1.2.1 ASF_INFO

This structure contains information that identifies the system's type and configuration requirements for ASF alerts, and is associated with an ASF Information Record Header of the following format:

Type = 00h or 80h

Reserved = 00h

Length = 0010h (16) for ASF v1.0. The length might increase for future specification versions.

| Offset | Name | Length | Value | Description |
|---|---|---|---|---|
| 00h | Minimum Watchdog Reset Value | BYTE | Varies | Identifies the minimum value (in the range 1 to 256) to which an alert-sending device's watchdog timer should be set at power-on reset, in seconds. This value also reflects the maximum amount of time the system firmware requires to reset the initial system boot-failure watchdog timer. |
| 01h | Minimum ASF Sensor Inter-poll Wait Time | BYTE | Varies | Identifies the minimum time, in 5 millisecond units, that an alert sending device should wait between the end of one ASF Sensor Poll Alert Message to the start of the next. The value ranges from 2 to 255. See below for more information. |
| 02h | System ID | WORD | Varies | Contains the manufacturer-assigned ID for this system type.<br>Each Platform Event Trap issued by a managed client's alert-sending device(s) will contain this value in its System ID field. |
| 04h | IANA Manufacturer ID | 4 BYTEs | Varies | Contains the Private Enterprise Number assigned to the system manufacturer by the Internet Assigned Numbers Authority (IANA). Refer to the Enterprise Numbers section found at http://www.iana.org/numbers.html#E for current assignments.<br>Each Platform Event Trap issued by a managed client's alert-sending device(s) will contain this value in its Manufacturer ID field.<br>***Note***: The value is specified in network byte order (MSB first) within the field. |
| 08h | Reserved | 4 BYTEs | 00h, 00h, 00h, 00h | Reserved for future definition by this specification, set to all zeros. |



Lenovo
Ex. 1037 - Page 41

The following is a 'C'-style definition of the `ASF_INFO` structure.

```
struct ASF_INFO {
    BYTE   MinWatchdogResetValue;
    BYTE   MinPollingInterval;
    WORD   SystemID;
    BYTE   IANAManufacturerID[4];
    BYTE   Reserved[4];
};
```

## Minimum ASF Sensor Inter-poll Wait Time

The system firmware specifies the minimum inter-poll wait time to achieve two goals:

1. to ensure that an alert sending device does not dominate the SMBus
2. to ensure that every sensor in the system is polled within a reasonable time.

To achieve these goals the *Minimum Inter-poll Wait Time* specifies the amount of time, in 5 millisecond units, an alert-sending device must wait between the completion of one event-polling cycle to the start of the next. If the device uses the SMBus *Get Event Status* message to start its polling cycle, the cycle includes any *Get Event Data* messages necessary to retrieve event-specific data. If the device uses only SMBus *Get Event Data* messages, each cycle is limited to a single message. The following diagram illustrates these two conditions.

**Polling with the *Get Event Status* Message for ASF Sensors**

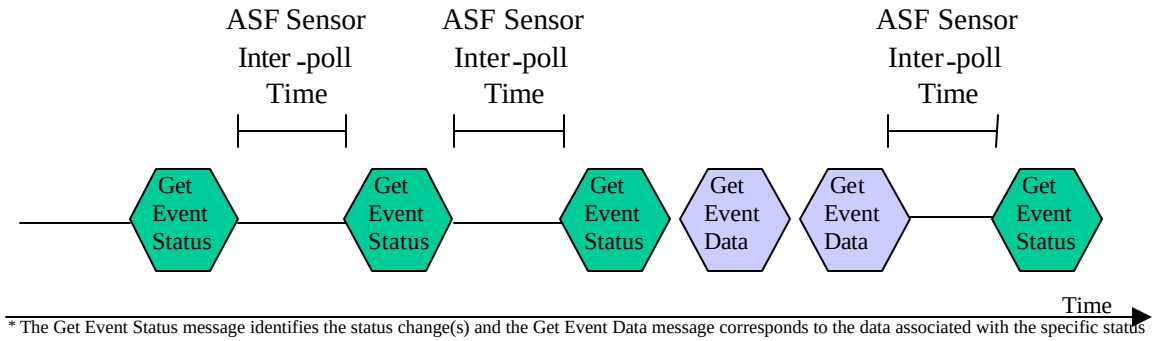


* The Get Event Status message identifies the status change(s) and the Get Event Data message corresponds to the data associated with the specific status change(s)

**Polling with the *Get Event Data* Message for ASF Sensors**

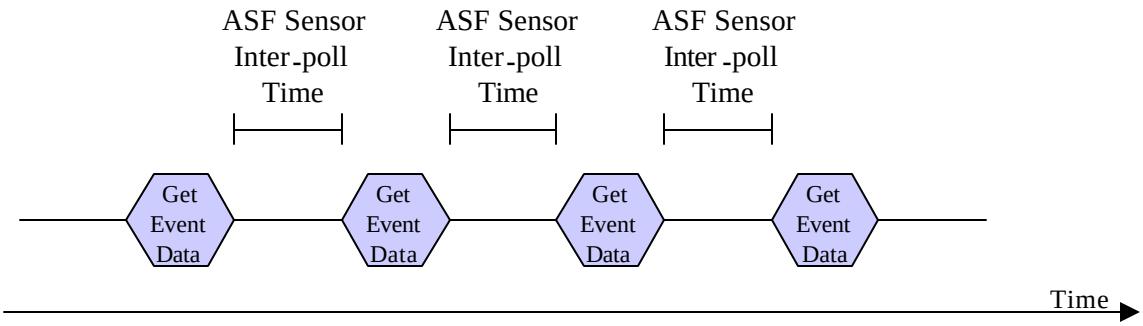


System implementers should set this time so that no one alert-sending device uses more the 25% of the SMBus bandwidth for the *Poll Alert Messages*, and so that each sensor is polled at least once a second. Following are guidelines for choosing this system-specific value:



Lenovo
Ex. 1037 - Page 42

- If all the sensors can run at 100KHz without doing any SMBus clock stretching, then the alert-sending device's poll with alert data for a single sensor will take about 1.2 milliseconds. If the wait time is 10 milliseconds (a field value of 2), then the alert-sending device will use less than 25% of the SMBus bandwidth (about 12%) and 83 sensors can be polled in one (1) second.
- If, on the other hand, the sensors run at the slowest SMBus speed (10KHz) an alert-sending device will require about 12 milliseconds to poll a single sensor. The wait time should be set to 35 milliseconds (a field value of 7) to keep the bandwidth below 25%. This still allows 21 sensors to be polled in one (1) second.

#### 4.1.2.2 ASF_ALRT

Legacy sensor devices might be used in a system to provide ASF-compatible alert capabilities. This (optional) data block provides the alert-sending device's OS-present configuration software with the information needed to poll those devices over the SMBus to determine if an alert-condition has been met. This structure is associated with an ASF Information Record Header of the following format:

Type = 01h or 81h

Reserved = 00h

Length = 4 + 4 + n*m for ASF Version 1.0. Note that this length might increase for future versions of this specification

| Offset | Name | Length | Value | Description |
|---|---|---|---|---|
| 00h | Reserved | WORD | 0000h | Reserved for future definition by this specification, set to 0000h. |
| 02h | Number of Alerts (n) | BYTE | Varies | Identifies the number of m-byte legacy-device alert entries that follow, in the range 1 to 8. |
| 03h | Array Element Length (m) | BYTE | 0Ch | Identifies the size (in bytes) of each Device Array element. For ASF version 1.0 and later, this field is set to a minimum of 0Ch (12). |
| 04h+ m*(n-1) | Device Array | Varies | Varies | An array of m-byte ASF_ALERTDATA structures describing the alert-capable legacy devices present on the system's SMBus. |

The following is a 'C'-style definition of the `ASF_ALRT` structure.

```
#define ANYSIZE_ARRAY   1
struct ASF_ALRT {
   WORD   Reserved;
   BYTE   NumberOfAlerts;
   BYTE   ArrayElementLength;
   struct ASF_ALERTDATA[ANYSIZE_ARRAY];
 };
```

The use of the `ANYSIZE_ARRAY` is simply for 'C' syntactical correctness.

### Minimum Legacy Sensor Poll Time

The *Minimum Legacy Sensor Poll Time* is a fixed value of 4 seconds. Typical Legacy Sensor devices require approximately one second to refresh read data before accessing it again.

This value specifies the amount of time that an alert-sending device must wait between the completion of one series of Legacy Sensor Device Alert Poll Messages and the start of the next. This is shown in the following diagram:



Lenovo
Ex. 1037 - Page 43

**Polling for ASF Legacy Sensor Events**

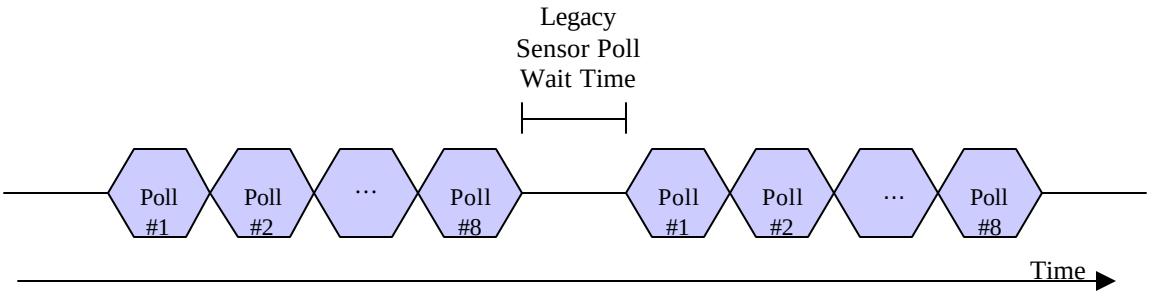


### 4.1.2.3 ASF_ALERTDATA

Legacy sensor devices listed in this table must comply with the requirements described in section 6.1.

***Note***: The events described in this data structure by the firmware are always associated with the assertion of a condition. Refer to *6.1.2 Usage of Firmware Legacy Sensor Device Alert Information* on page 63 for additional information.

| Offset | Name | Length | Value | Description |
|---|---|---|---|---|
| 00h | $Alert_n$, Device Address (n ranges from 1 to Number of Alerts) | BYTE | Varies | Contains the SMBus address of a legacy sensor device to which the SMBus command is written, in the following format:<br>**Bit(s)** **Description**<br>7:1 Contains the SMBus address of the legacy sensor device.<br>0 Identifies whether (1) or not (0) the alerting condition (event) is based on an exact match. Refer to 6.1.2 for details. |
| 01h | $Alert_n$, Command | BYTE | Varies | Contains the SMBus Command or register value used to obtain the data associated with the event. |
| 02h | $Alert_n$, Data Mask | BYTE | Varies | The data-mask to be logically AND'd with the returned sensor data to isolate significant bits associated with this event. |
| 03h | $Alert_n$, Compare Value | BYTE | Varies | The value to compare to the masked sensor data, if an exact match is specified in the *Device Address* field. If a match results, the alert associated with this event should be sent by the alert-sending device. |
| 04h | $Alert_n$, Event Sensor Type | BYTE | Varies | The value to be set[6] into the alert's Event Sensor Type field (see [PET] for definitions.) |
| 05h | $Alert_n$, Event Type | BYTE | Varies | The value to be set[6] into the alert's Event Type field (see [PET] for definitions.) |
| 06h | $Alert_n$, Event Offset | BYTE | Varies | The value to be set[6] into the alert's Event Offset field (see [PET] for definitions.)<br>***Note***: The value specified here by the system's firmware always has bit 7 set to 0b to indicate that the alert information is associated with an event assertion. |

[6] The alert-sending device sets these values into the PET frame it transmits if the associated alerting condition is active.



Lenovo
Ex. 1037 - Page 44

| Offset | Name | Length | Value | Description |
|---|---|---|---|---|
| 07h | $Alert_n$, Event Source Type | BYTE | Varies | The value to be set[6] into the alert's Event Source Type field (see [PET] for definitions.) |
| 08h | $Alert_n$, Event Severity | BYTE | Varies | The value to be set[6] into the alert's Event Severity field (see [PET] for definitions.) |
| 09h | $Alert_n$, Sensor Number | BYTE | Varies | The value to be set[6] into the alert's Sensor Number field (see [PET] for definitions.) |
| 0Ah | $Alert_n$, Entity | BYTE | Varies | The value to be set[6] into the alert's Entity field (see [PET] for definitions.) |
| 0Bh | $Alert_n$, Entity Instance | BYTE | Varies | The value to be set[6] into the alert's Entity Instance field (see [PET] for definitions.) |

The following is a 'C'-style definition of the `ASF_ALERTDATA` structure.

```
struct ASF_ALERTDATA {
    BYTE   DeviceAddress;
    BYTE   Command;
    BYTE   DataMask;
    BYTE   CompareValue;
    BYTE   EventSensorType;
    BYTE   EventType;
    BYTE   EventOffset;
    BYTE   EventSourceType;
    BYTE   EventSeverity;
    BYTE   SensorNumber;
    BYTE   Entity;
    BYTE   EntityInstance;
};
```

#### 4.1.2.4 ASF_RCTL

Devices might be used in a system to provide ASF-compatible remote-control system actions. This (optional) information provides an alert-sending device's OS-present configuration software with the information needed to command those devices to perform remote-control functions over the SMBus. This structure is associated with an ASF Information Record Header of the following format:

Type = 02h or 82h

Reserved = 00h

Length = 4 + 4 + n*m for ASF Version 1.0. Note that this length might increase for future versions of this specification

| Offset | Name | Length | Value | Description |
|---|---|---|---|---|
| 00h | Number of Controls (n) | BYTE | Varies | Identifies the number of *m*-byte remote-control entries that follow. |
| 01h | Array Element Length (m) | BYTE | 05h | Identifies the size (in bytes) of each Control Array element. For ASF version 1.0 and later, this field is set to a minimum of 04h (4). |
| 02h | Reserved | WORD | 0000h | Reserved for future definition by this specification. |
| 04h + m*(n-1) | Control Array | Varies | Varies | An array of *m*-byte `ASF_CONTROLDATA` structures describing the remote-control devices present on the system's SMBus. |



Lenovo
Ex. 1037 - Page 45

The following is a 'C'-style definition of the `ASF_RCTL` structure.

```
#define ANYSIZE_ARRAY   1
struct ASF_RCTL {
   BYTE   NumberOfAlerts;
   BYTE   ArrayElementLength;
   struct ASF_CONTROLDATA[ANYSIZE_ARRAY];
 };
```

The use of the `ANYSIZE_ARRAY` is simply for 'C' syntactical correctness.

#### 4.1.2.5 ASF_CONTROLDATA

***Note***: Devices listed in this table must comply with the requirements described in section 6.3.

| Offset | Name | Length | Value | Description |
|---|---|---|---|---|
| 00h | $Control_n$, Function (n ranges from 1 to Number of Controls) | BYTE | Varies | Identifies the action taken by the system upon issuing the associated SMBus write operation. Refer to section 6.3.3 for more details on the remote control actions.<br>**Value** **Meaning**<br>00h The system performs a reset.<br>01h The system unconditionally powers off.<br>02h The system powers on.<br>03h The system performs a power cycle reset.<br>Other Reserved fur future assignment by this specification. |
| 01h | $Control_n$, Device Address | BYTE | Varies | Contains the SMBus address to which the SMBus command is written by the alert-sending device.<br>**Bit(s)** **Description**<br>7:1 Contains the SMBus address of the remote-control device.<br>0 Identifies whether (1) or not (0) the remote control command must include a PEC. |
| 02h | $Control_n$, Command | BYTE | Varies | Contains the SMBus Command or register offset to be written with the specified data to perform the specified ASF function. |
| 03h | $Control_n$, Data Value | BYTE | Varies | Contains the data value to be written to the SMBus device to cause the associated function to be performed. |

The following is a 'C'-style definition of the `ASF_CONTROLDATA` structure.

```
struct ASF_CONTROLDATA {
   BYTE   Function;
   BYTE   DeviceAddress;
   BYTE   Command;
   BYTE   DataValue;
};
```

#### 4.1.2.6 ASF_RMCP

This information record's presence within a managed client's ACPI implementation implies that the client supports ASF-RMCP remote-control capabilities and captures the RMCP boot options processed by the system firmware on its most recent boot of the system. The firmware provides the captured boot options to allow other system boot agents (e.g. PXE images, hard-disk boot managers) to also make use of the data.

***Note***: An implementation might choose to ignore any RMCP boot options if the system boot cause was other than ASF alert-sending device initiated. In that case, the system firmware reports the boot options as all zeros within this structure.



Lenovo
Ex. 1037 - Page 46

This structure is associated with an ASF Information Record Header of the following format:

Type = 03h or 83h

Reserved = 00h

Length = 13h (19) for ASF Version 1.0. Note that this length might increase for future versions of this specification

| Offset | Name | Length | Value | Description |
|---|---|---|---|---|
| 00h | Remote Control Capabilities | 7 BYTEs | Bit-field | Identifies the remote control capabilities of the system's ASF implementation, refer to the text following this table for more information. |
| 07h | RMCP Boot Options Completion Code | BYTE | Varies | Identifies the completion code associated with the RMCP boot options processed by the system firmware on its most recent boot of the system, one of:<br>00h *Successful*. Boot options were present and successfully processed by the firmware. The boot options processed are identified in the next three fields of this structure.<br>01h *No options to process*. No boot options were available for the firmware to process for the most recent boot of the system.<br>80h *Options mismatch*. Multiple ASF alerting devices are present, and more than one set of unique boot options was presented to the firmware. The firmware cleared all boot options and booted the system using the system's current defaults. |
| *The values in the next four fields have meaning only if the completion code at offset 07h of this structure contains 00h (successful).* | | | | |
| 08h | RMCP IANA Enterprise ID | 4 BYTEs | Varies | Contains the IANA Enterprise ID value present in the RMCP Boot Options Data processed by the system firmware on its most recent boot of the system; see *Reset (10h), Power-up (11h), and Power Cycle Reset (13h)* on page 23 for details. |
| 0Ch | RMCP Special Command | BYTE | Varies | Contains the RMCP Special Command processed by the system firmware on its most recent boot of the system ; see *Reset (10h), Power-up (11h), and Power Cycle Reset (13h)* on page 23 for command details. |
| 0Dh | RMCP Special Command Parameter | 2 BYTEs | Varies | Contains the two-byte *Special Command Parameter* value present in the RMCP command processed by the system firmware on its most recent boot of the system. Command parameter data byte 1 is present at offset 0Dh; data byte 2 is present at offset 0Eh. |
| 0Fh | RMCP Boot Options | 2 BYTEs | Varies | Contains the RMCP boot options processed by the system firmware on its most recent boot of the system; see *Boot Options Bit Mask* on page 24 for command details. |



Lenovo
Ex. 1037 - Page 47

| Offset | Name | Length | Value | Description |
|---|---|---|---|---|
| 11h | RMCP OEM Parameters | 2 BYTEs | Varies | Contains the RMCP OEM Parameters processed by the system firmware on its most recent boot of the system; see *Reset (10h), Power-up (11h), and Power Cycle Reset (13h)* on page 23 for command details. |

The following is a 'C'-style definition of the `ASF_RMCP` structure.

```
struct ASF_RMCP {
    BYTE   RemoteControlCapabilities[7];
    BYTE   RMCPCompletionCode;
    BYTE   RMCPIANA[4];
    BYTE   RMCPSpecialCommand;
    BYTE   RMCPSpecialCommandParameter[2];
    BYTE   RMCPBootOptions[2];
    BYTE   RMCPOEMParameters[2];
};
```

The *Remote Control Capabilities* bit-flags identify the remote-control features supported by the system firmware, and mimic the RMCP command format. Refer to *System Firmware Capabilities Bit Mask* on page 27, *Special Commands Bit Mask* on page 27, and *System Capabilities Bit Mask* on page 27 for details.

***Note***: These capabilities reflect the RMCP support provided by the base system and its associated firmware, and might be limited by the alerting device's RMCP support.

| Offset | Description |
|---|---|
| 00h | Contains the system's RMCP Boot Options Capabilities Bit Mask, byte 1. |
| 01h | Contains the system's RMCP Boot Options Capabilities Bit Mask, byte 2 |
| 02h | Contains the system's RMCP Boot Options Capabilities Bit Mask, byte 3 |
| 03h | Contains the system's RMCP Boot Options Capabilities Bit Mask, byte 4. |
| 04h | Contains the system's RMCP Special Commands Bit Mask, byte 1 |
| 05h | Contains the system's RMCP Special Commands Bit Mask, byte 2 |
| 06h | Contains the system's RMCP System Capabilities Bit Mask. |

#### 4.1.2.7 ASF_ADDR

This information record's presence within a managed client's ACPI implementation implies that the client includes SMBus devices with fixed addresses.

Fixed SMBus addresses (including those for legacy devices) must be identified to the SMBus Address Resolution Protocol (ARP) agent to guarantee that the agent will not assign these addresses to dynamic-address devices. Software agents that perform SMBus address assignment should note that fixed-address devices listed in this structure *might also be discoverable* via SMBus ARP methods.

This structure is associated with an ASF Information Record Header of the following format:

Type = 04h or 84h

Reserved = 00h

Length = 2 + *n*, where *n* is the number of fixed-address devices, for ASF Version 1.0. Note that this length might increase for future versions of this specification

| Offset | Name | Length | Value | Description |
|---|---|---|---|---|



Lenovo
Ex. 1037 - Page 48

| Offset | Name | Length | Value | Description |
|---|---|---|---|---|
| 00h | SEEPROM Address | BYTE | Varies | Identifies the fixed SMBus address of an SEEPROM device that contains additional fixed-address and legacy-device information, as described in *SMBus Serial* EEPROM. This field is formatted as:<br>**Bit(s)** **Description**<br>7:1 Contains the SMBus address of the SEEPROM device.<br>0 Identifies whether (1) or not (0) the SEEPROM resides on a removable device.<br>***Note***: If no fixed-address SEEPROM device is supported by the base system, this field is set to 0. |
| 01h | Number of Devices (*n*) | BYTE | Varies | Identifies the number of device-address entries that follow.<br>***Note***: If the system supplies the fixed addresses solely via SEEPROM implementation, this field contains 0. |
| 02h | Fixed SMBus Address | *n* BYTEs | Varies | Each field contains a fixed SMBus address for the system, in the following format:<br>**Bit(s)** **Description**<br>7:1 Contains the SMBus address of the fixed-address device.<br>0 Identifies whether (1b) or not (0b) the address is associated with a non-legacy, ASF-compliant device. When set to 1b, the SMBus device at this address supports the SMBus 2.0 directed *Get UDID* command. |

The following is a 'C'-style definition of the `ASF_ADDR` structure.

```
#define ANYSIZE_ARRAY 1
struct ASF_ADDR {
    BYTE   SEEPROMAddress;
    BYTE   NumberOfDevices;
    BYTE   FixedSMBusAddresses[ANYSIZE_ARRAY];
};
```

The use of the `ANYSIZE_ARRAY` is simply for 'C' syntactical correctness.

## 4.2 SMBIOS Structures

### *4.2.1 System Information (Type 1)*

The SMBIOS *System Information* structure contains the system's UUID (also referred to as the GUID, Globally Unique ID) of the system. An alerting device's OS-present configuration software records the system's UUID in the device's non-volatile storage; any Platform Event Traps issued by the alerting device will then be associated with the system. Refer to [SMBIOS] for this table's format.

## 4.3 SMBus Serial EEPROM (SEEPROM)

An implementation might choose to identify all or part of the managed client's fixed SMBus addresses and legacy access-methods using data structures present in an SMBus-attached SEEPROM whose address is specified in the *SEEPROM Address* field of the `ASF_ADDR` structure (see 4.1.2.7). This method lends itself to a notebook/docking-station system implementation, with the notebook firmware providing the fixed address of the docking station's SEEPROM and that SEEPROM providing the fixed addresses present on the docking station itself. Alternatively, the notebook firmware would need to provide the fixed address and legacy-device information for all its supported docking stations.

The SEEPROM referenced by the *SEEPROM Address* conforms to [FRU], and all ASF-related data are stored in the *MultiRecord* area of the device.



Lenovo
Ex. 1037 - Page 49

### 4.3.1 Fixed SMBus Addresses (SEEPROM Record Type 06h)

A record header of the following format (as defined by [FRU]) identifies a *Fixed SMBus Addresses* record:

| Offset | Format | Description |
|---|---|---|
| 00h | BYTE | *Record Type ID*. Set to 06h to identify a *Fixed SMBus Addresses* record. |
| 01h | BYTE | **Bit(s)** **Meaning**<br>7 End of List<br>6:4 Reserved, set to 000b<br>3:0 Record Format version |
| 02h | BYTE | *Record Length*. Identifies the length of the *Fixed SMBus Addresses* record that follows, not including this record header. |
| 03h | BYTE | *Record Checksum*. This value, when added to the byte-wise checksum of the record, produces a result of 00h. |
| 04h | BYTE | *Header Checksum*. This value causes the byte-wise checksum of the record header to result in 00h. |

The *Fixed SMBus Addresses* record directly follows its record header in the SEEPROM and is specified as an ASF_ADDR structure, starting at offset 01h (i.e. the structure's data, not including the *SEEPROM Address* field). Software agents that perform SMBus address assignment should note that fixed-address devices listed in this record *might also be discoverable* via SMBus ARP methods.

### 4.3.2 ASF Legacy-Device Alerts (SEEPROM Record Type 07h)

A record header of the following format (as defined by [FRU]) identifies an *ASF Legacy-Device Alerts* record:

| Offset | Format | Description |
|---|---|---|
| 00h | BYTE | *Record Type ID*. Set to 07h to identify an *ASF Legacy-Device Alerts* record. |
| 01h | BYTE | **Bit(s)** **Meaning**<br>7 End of List<br>6:4 Reserved, set to 000b<br>3:0 Record Format version |
| 02h | BYTE | *Record Length*. Identifies the length of the *ASF Legacy-Device Alerts* record that follows, not including this record header. |
| 03h | BYTE | *Record Checksum*. This value, when added to the byte-wise checksum of the record, produces a result of 00h. |
| 04h | BYTE | *Header Checksum*. This value causes the byte-wise checksum of the record header to result in 00h. |

The *ASF Legacy-Device Alerts* record directly follows its record header in the SEEPROM, and is specified as an ASF_ALRT structure (see 4.1.2.2 for details).

### 4.3.3 ASF Remote Control (SEEPROM Record Type 08h)

A record header of the following format (as defined by [FRU]) identifies an *ASF Remote Control* record:

| Offset | Format | Description |
|---|---|---|
| 00h | BYTE | *Record Type ID*. Set to 08h to identify an *ASF Remote Control* record. |
| 01h | BYTE | **Bit(s)** **Meaning**<br>7 End of List<br>6:4 Reserved, set to 000b<br>3:0 Record Format version |



Lenovo
Ex. 1037 - Page 50

| Offset | Format | Description |
|---|---|---|
| 02h | BYTE | *Record Length*. Identifies the length of the *ASF Remote Control* record that follows, not including this record header. |
| 03h | BYTE | *Record Checksum*. This value, when added to the byte-wise checksum of the record, produces a result of 00h. |
| 04h | BYTE | *Header Checksum*. This value causes the byte-wise checksum of the record header to result in 00h. |

The *ASF Remote Control* record directly follows its record header in the SEEPROM, and is specified as an `ASF_RCTL` structure (see 4.1.2.4 for details).



Lenovo
Ex. 1037 - Page 51

# 5 ASF SMBus Messages

This section describes the SMBus messages used to support ASF-defined communications between

- The managed client's SMBus host controller and an alert-sending device
- An alert-sending device and an ASF sensor

These messages provide the framework within which

- Event conditions and data are communicated to the alert-sending device; the data to be subsequently transmitted as a PET
- The system firmware can control an alert-sending device's watchdog timer.
- The system firmware can retrieve and manage RMCP Boot Option information previously received by the alert-sending device

The SMBus messages defined by this specification contain an ASF *Version Number,* identifying the ASF specification version number to which the message complies. This number is made up of two values: a major version number and a minor version number. The *Version Number* is encoded as a one-byte BCD (binary-coded decimal) value, e.g. 0001 0000b for ASF Specification v1.0.

This specification reserves values in the range 0 to 15 (0000 0000b to 0000 1111b) as ASF-defined SMBus command field values; all other SMBus command values are available for definition by the specific device supplier. These definitions apply for all SMBus 2.0-compliant devices that report that they support ASF via the *Interface* field of their UDID, see 6.2.1 for additional information.

| Command Value | Sub-command Value | Command Name |
|---|---|---|
| 0000 0001b | | ***Sensor Device & System State*** |
| | 0001 0001b | Get Event Data |
| | 0001 0010b | Get Event Status |
| | 0001 0011b | Device Type Poll |
| | 0001 1000b | Set System State |
| 0000 0010b | | ***Management Control*** |
| | 0001 0011b | Start Watchdog Timer |
| | 0001 0100b | Stop Watchdog Timer |
| 0000 0011b | | ***ASF Configuration*** |
| | 0001 0101b | Clear Boot Options |
| | 0001 0110b | Return Boot Options |
| | 0001 0111b | No Boot Options |
| 0000 0100b | | ***Messaging*** |
| | 0001 0101b | Push Message with Retransmission |
| | 0001 0110b | Push Message without Retransmission |
| | 0001 0001b | Set Alert Configuration |
| | 0001 0010b | Get Alert Configuration |
| 0000 0101b to 0000 1111b | | Reserved for future definition by this specification |



Lenovo
Ex. 1037 - Page 52

***Note***: The values associated with the Wr, Command, Byte Count, Sub-command, Version Number, A, and ~A fields for each of the messages in this section are each specified in binary format with no trailing letter 'b'.

## 5.1 Alert-related Messages

SMBus messages defined in this sub-section convey alert-related information to the alert-sending device, which usually results in a PET frame being transmitted. The *Get Event Data*, *Start Watchdog Timer*, and *Push Alert* messages include fields that the alert-sending device copies to a subsequently transmitted PET frame. The fields are Event Sensor Type, Event Type, Event Offset, Event Source Type, Event Severity, Sensor Device, Sensor Number, Entity, Entity Instance, and Event Data; values for these fields are described in sections 3.1.3 and 3.1.4.

### *5.1.1 ASF-Sensor Poll Messages*

ASF-sensors support messages defined in this section; those sensors also comply with the device requirements described in section 6.2.

An ASF-sensor has a single SMBus address, but monitors one or more events. Within the messages defined in this section, the *Event Status Index* field identifies a unique event monitored by the ASF-sensor; once the ASF-sensor has completed its power-up initialization, the index-to-event relationship remains constant independent of the system sleep-state. *Event Status Index* values are zero-based, sequential, and contiguous within an ASF-sensor. When a sensor monitors N events, the sensor responds to *Event Status Index* values in the range 0 to N-1; any other *Event Status Index* value is defined as out-of-range for that ASF-sensor. For example:

- An ASF-sensor that monitors a single event provides support for index value 0 only. If the device receives a *Get Event Data* command with an *Event Status Index* greater than 0, the device responds with the *Status* field set to "Event Status End".
- An ASF-sensor that monitors seven (7) events provides support for index values in the range 0 to 6. If the device receives a *Get Event Data* command with an *Event Status Index* greater than or equal to 7, the device responds with the *Status* field set to "Event Status End".

The *Event Status Index* field value ranges from 0 to 37h[7], so each ASF-sensor can monitor at most 56 events.

Messages defined in this section provide a method to retrieve the event state associated with each device monitored by an ASF-sensor; that state is returned by the ASF-sensor as an enumerated value in the *Status* field of the message. The *Status* field is an 8-bit value:

| **Bit(s)** | **Description** |
|---|---|
| 7:4 | Reserved for future definition by this specification, set to 0000b. |
| 3:0 | *Status Value*. This enumerated value indicates the event state of the ASF-sensor device associated with the message's *Event Status Index*. Those values are described in the following table. |

[7] This value was chosen due to the 32 data byte limitation of the SMBus 2.0 Block Write-Block Read Process Call protocol that is used by the *Get Event Status* message. That message includes 3 bytes for the write portion of the message, and one byte of the read portion defines the number of events returned: leaving 28 bytes in which to return the status. Each read data byte returns two events' Status Value, allowing at most 56 events to be monitored by any one ASF-sensor.



Lenovo
Ex. 1037 - Page 53

| Status Value | "Get Event Status" Rd Byte Count | Status Type | Status Description |
|---|---|---|---|
| 0000b | 0Bh to 10h[8] | Deasserted (no send) | The event is in the deasserted state, but the ASF-sensor does not want a PET to be sent on this condition. This will typically be used when a device sets its initial status upon initialization. The alert-sending device uses this state information to update its state tracking information, but does not generate a PET on a change. |
| 0001b | 0Bh to 10h[8] | Asserted (no send) | The event is in the asserted state, but the ASF-sensor does not want a PET to be sent on this condition. This will typically be used when a device sets its initial status upon initialization. The alert-sending device uses this state information to update its state tracking information, but does not generate a PET on a change. |
| 0010b | 0Bh to 10h | Deasserted (send) | A deassertion event should be sent when the alert-sending device either first accesses this device, or detects a change to this state during operation. |
| 0011b | 0Bh to 10h | Asserted (send) | An assertion event should be sent when the alert-sending device either first accesses this device, or detects a change to this state during operation. |
| 0100b | 02h (or 0Bh to 10h[9]) | Disabled | The device is present within the ASF-sensor, but its associated event has been disabled via hardware or software methods. |
| 0101b | 02h (or 0Bh to 10h[9]) | Undetermined | The sensor device has not yet assessed the present event state, possibly because the device is initializing. |
| 0110b | — | Reserved | Reserved for future definition by this specification. |
| 0111b | 02h | Event Status End | The ASF-sensor has no device associated with either the value specified in *Event Status Index* or any higher value. |
| 1000b to 1111b | — | Reserved | Reserved for future definition by this specification. |

### 5.1.1.1 Get Event Data

The Get Event Data message is used to poll ASF-sensors for individual event (specified by *Event Status Index*) status and associated PET field values.

***Note***: If an ASF-sensor receives a *Get Event Data* message with an *Event Status Index* that is out of range (see 5.1.1), the sensor responds with the *Status* field value set to *Event Status End*.

This message uses the SMBus 2.0 *Block Write-Block Read Process Call* protocol and has two return-data formats.

The format that returns PET field values is:

| 1 | 7 | 1 | 1 | 8 | 1 | 8 | 1 | |
|---|---|---|---|---|---|---|---|---|
| S | Slave Address | Wr | A | Command | A | Wr Byte Count | A | • • • |
| | ASF-sensor Address | 0 | 0 | Sensor Device 0000 0001 | 0 | 0000 0100 | 0 | |

[8] The ASF-sensor transmits the PET fields for these *Status Value* codes to enable implementations to optionally support start-up state logging.

[9] Any data that an ASF-sensor might return with this *Status Type* is undefined and should not be interpreted by the message initiator. This function is provided to allow possible simplification of an ASF-sensor device's state-machine implementation.



Lenovo
Ex. 1037 - Page 54

| | | | | | | | | |
|---|---|---|---|---|---|---|---|---|
| 8 | 1 | 8 | 1 | 8 | 1 | 8 | 1 | |
| Wr Data 1 | A | Wr Data 2 | A | Wr Data 3 | A | Wr Data 4 | A | • • • |
| Sub Command Get Event Data 0001 0001 | 0 | Version Number 0001 0000 | 0 | Event Status Index 00bb bbbb[10] | 0 | Reserved 0000 0000 | 0 | |

| | | | | | | |
|---|---|---|---|---|---|---|
| 1 | 7 | 1 | 1 | 8 | 1 | |
| Sr | Slave Address | Rd | A | Rd Byte Count | A | • • • |
| | ASF-sensor Address | 1 | 0 | 0000 1010 to 0000 1111[11] | 0 | |

| | | | | | | | |
|---|---|---|---|---|---|---|---|
| 1 | 8 | 1 | 8 | 1 | 8 | 1 | |
| A | Rd Data1 | A | Rd Data 2 | A | Rd Data3 | A | • • • |
| 0 | Status | 0 | Event Sensor Type | 0 | Event Type | 0 | |

| | | | | | | | | |
|---|---|---|---|---|---|---|---|---|
| 8 | 1 | 8 | 1 | 8 | 1 | 8 | 1 | |
| Rd Data4 | A | Rd Data5 | A | Rd Data6 | A | Rd Data7 | A | • • • |
| Event Offset[12] | 0 | Event Source Type | 0 | Event Severity | 0 | Sensor Device | 0 | |

| | | | | | | |
|---|---|---|---|---|---|---|
| 8 | 1 | 8 | 1 | 8 | 1 | |
| Rd Data8 | A | Rd Data9 | A | Rd Data10 | A | • • • |
| Sensor Number | 0 | Entity | 0 | Entity Instance | 0 | |

| | | | |
|---|---|---|---|
| | 8 | 1 | 1 |
| • • • | PEC | -A | P |
| From zero (0) to five (5) bytes of Event Data | [data dependent] | 1 | |

The format that does not return PET field values is:

| | | | | | | | | |
|---|---|---|---|---|---|---|---|---|
| 1 | 7 | 1 | 1 | 8 | 1 | 8 | 1 | |
| S | Slave Address | Wr | A | Command | A | Wr Byte Count | A | • • • |
| | ASF-sensor Address | 0 | 0 | Sensor Device 0000 0001 | 0 | 0000 0100 | 0 | |

| | | | | | | | | |
|---|---|---|---|---|---|---|---|---|
| 8 | 1 | 8 | 1 | 8 | 1 | 8 | 1 | |
| Wr Data 1 | A | Wr Data 2 | A | Wr Data 3 | A | Wr Data 4 | A | • • • |
| Sub Command Get Event Data 0001 0001 | 0 | Version Number 0001 0000 | 0 | Event Status Index 00bb bbbb[10] | 0 | Reserved 0000 0000 | 0 | |

| | | | | | | |
|---|---|---|---|---|---|---|
| 1 | 7 | 1 | 1 | 8 | 1 | |
| Sr | Slave Address | Rd | A | Rd Byte Count | A | • • • |
| | ASF-sensor Address | 1 | 0 | 0000 0001 | 0 | |

| | | | | | |
|---|---|---|---|---|---|
| 1 | 8 | 1 | 8 | 1 | 1 |
| A | Rd Data1 | A | PEC | -A | P |
| 0 | Status | 0 | [data dependent] | 1 | |

[10] *Event Status Index* values range from 00h to 37h.

[11] The *Rd Byte Count* ranges from 10 to 15, depending on the number of *Event Data Bytes* (0 to 5).

[12] Bit 7 of this field is set when the PET event indicates a "Deassertion Event". The ASF Sensor provides the appropriate value for this bit. Typically, the bit value will reflect the assert or deassert status as defined in section 5.1.1.



Lenovo
Ex. 1037 - Page 55

### 5.1.1.2 Get Event Status

This message returns the present event status for all events monitored by an ASF-sensor (a maximum of 56 events[7]). An alert-sending device can quickly determine event status changes by comparing the returned *Status* values with the values from a previously issued *Get Event Status* message.

The *Event Status Count* field identifies the zero-based number of events that the ASF-sensor monitors, and the number of *Status* values it returns on this message. If the ASF-sensor includes 5 events, for example, it returns an *Event Status Count* field value of 04h.

***Note***: The value the ASF-sensor returns in the *Rd Byte Count* field is at least to 1 + `roundup`(*Event Status Count* / 2). The *Rd Byte Count* value can range from 2 (one monitored event) to 29 (56 monitored events).

An ASF-sensor's response to this message returns the *Status Value* (see 5.1.1) for each event the sensor monitors. The 4-bit *Status Value* fields are packed two-to-a-byte in the response return value; the following table illustrates the values returned by an ASF sensor that monitors five (5) events.

| Rd Data Byte Bit Position | | | | | | | | Rd Data Byte Number |
|---|---|---|---|---|---|---|---|---|
| 7 | 6 | 5 | 4 | 3 | 2 | 1 | 0 | |
| Event Status Count (0000 0100b) | | | | | | | | 1 |
| Event Status Index 1 (bbbb) | | | | Event Status Index 0 (bbbb) | | | | 2 |
| Event Status Index 3 (bbbb) | | | | Event Status Index 2 (bbbb) | | | | 3 |
| Unused (0111b) | | | | Event Status Index 4 (bbbb) | | | | 4 |

The *Get Event Status* message format is:

| 1 | 7 | 1 | 1 | 8 | 1 | 8 | 1 | |
|---|---|---|---|---|---|---|---|---|
| S | Slave Address | Wr | A | Command | A | Wr Byte Count | A | • • • |
| | ASF-sensor Address | 0 | 0 | Sensor Device 0000 0001 | 0 | 0000 0011 | 0 | |

| 8 | 1 | 8 | 1 | 8 | 1 | |
|---|---|---|---|---|---|---|
| Wr Data 1 | A | Wr Data 2 | A | Wr Data 3 | A | • • • |
| Sub Command Get Event Status 0001 0010 | 0 | Version Number 0001 0000 | 0 | Reserved 0000 0000 | 0 | |

| 1 | 7 | 1 | 1 | 8 | 1 | |
|---|---|---|---|---|---|---|
| Sr | Slave Address | Rd | A | Rd Byte Count | A | • • • |
| | ASF-sensor Address | 1 | 0 | 0000 0010 to 0000 1101[13] | 0 | |

| 8 | 1 | 8 | 1 | |
|---|---|---|---|---|
| Rd Data1 | A | Rd Data2 | A | • • • |
| Event Status Count | 0 | Status 1/0 | 0 | |

| 8 | 1 | 8 | 1 | 1 |
|---|---|---|---|---|
| Rd Data N | A | PEC | ~A | P |
| Status 2*(N-2)-1/2*(N-2) | 0 | [data dependent] | 1 | |

[13] *Rd Byte Count* ranges from 2 to 29, depending on the number of devices monitored by the ASF-sensor.



Lenovo
Ex. 1037 - Page 56

### 5.1.2 Asynchronous Alert Notification to SMBus Host

This message notifies the SMBus host or an Auxiliary Management Device of a pending alert, and provides a common context that conforms to the strict rules for communicating with the system SMBus host. This asynchronous notification includes an *Event Status Index* (see 5.1.1) so that the alert receiver can quickly determine the type of event and its location within the transmitting ASF-sensor when multiple events are monitored by the ASF-sensor address.

These are behavior rules governing when the ASF-sensor sends notifications:

1. The Asynchronous Alert Notification message must not be sent to an alert-sending device, the Push Alert message (see 5.1.5) must be used instead.
2. Stop sending a notification once the message has been completely sent with ACKs to all bytes according to [SMBus 2.0] definitions, or if the event causing the alert notification is cleared.
3. Retry any notification that is NACKed by the target device at a minimum retry interval of 4 seconds until (a) the event is cleared, (b) the notification function is masked by a re-configuration of the notifying device or (c) the notification retry limit is exceeded.
4. Asynchronous notifications are disabled globally by default or on power-on-reset of a notifying device, and can be globally disabled at any time.

The notifying device includes the following fields as part of the asynchronous notification:

| Field Name | Bit(s) | Meaning |
|---|---|---|
| Interface | 7 | Set to 1b. This identifies that the message is an asynchronous notification and prevents the write-word from being interpreted as a 1-byte write-block SMBus command. |
| | 6:4 | *Interface Class* for the asynchronous notification, one of:<br>000b ASF<br>001b IPMI<br>010b Vendor (OEM)<br>Others Reserved for future definition by this specification |
| | 3:0 | Specified by the *Interface Class*. The combination of the *Interface Class* value and this field's value defines the interpretation of the *Alert Value* field.<br>• For *Interface Class* = 000b (ASF), the field contains the *Notification Type*, one of:<br>0h Reserved for future Alert-sending Device Receive Message Notification<br>1h Reserved for future Alert-sending Device Transmit Message Notification.<br>2h ASF-sensor Device Event<br>Others Reserved for future definition by this specification.<br>• For *Interface Class* = 001b (IPMI), the values are specified by [IPMI].<br>• For *Interface Class* = 010b (OEM), the manufacturer identified by the notifying device's SMBus 2.0 UID specifies the value. |
| Alert Value | 7:0 | For Interface Class = 000b (ASF), the interpretation of this field is specified by the *Notification Type* value:<br>• When *Notification Type* = 2h (ASF-sensor Device Event), the Alert Value contains an Event Status Index of the form 00bb_bbbb.<br>• This field's value is undefined for all other *Notification Type* values. |



Lenovo
Ex. 1037 - Page 57

This following format of the asynchronous notification does not include a PEC byte. The notifying device uses this format when it sends a notification to the SMBus host.

| 1 | 7 | 1 | 1 | 7 | 1 | 1 | 8 | 1 | 8 | 1 | 1 |
|---|---|---|---|---|---|---|---|---|---|---|---|
| S | Target Address | Wr | A | Sending Device Address | | A | Data Byte Low | A | Data Byte High | A | P |
| | SMBus Host (0x10) | 0 | 0 | ASF-Sensor Address | 0 | 0 | Interface | 0 | Alert Value | 0 | |

- This following format of the asynchronous notification includes a PEC byte. The notifying device uses this format when the device sends a notification to an Auxiliary Management Device.

| 1 | 7 | 1 | 1 | 7 | 1 | 1 | 8 | 1 | 8 | 1 | 8 | 1 | 1 |
|---|---|---|---|---|---|---|---|---|---|---|---|---|---|
| S | Target Address | Wr | A | Sending Device Address | | A | Data Byte Low | A | Data Byte High | A | PEC Byte | A | P |
| | Auxiliary Management Device Address | 0 | 0 | ASF-Sensor Address | 0 | 0 | Interface | 0 | Alert Value | 0 | [data dependent] | 0 | |

### 5.1.3 Alert Configuration Message

Any ASF-sensor capable of issuing either *Push Alert* or *Asynchronous Alert Notification* messages must also support this standard message that sets the event targets, the retry limits and the notification masks. The effect of the Alert Configuration is immediate so that re-configuration may cause a pushed alert or alert notification to be masked and disabled.

When an SMBus master device issues this message via an [SMBus 2.0] write-block format, the master device specifies the configuration to be set into the ASF-sensor; when the master device issues the message via an [SMBus 2.0] block-read format, the ASF-sensor responds to the message with its current configuration.

The following fields are specified within the Alert Configuration Message:

| Field Name | Bit(s) | Meaning |
|---|---|---|
| Interface Class | 7:4 | *Major class*:<br>1000b ASF<br>Others Reserved for future definition by this specification. |
| | 3:0 | *Minor Class*. These definitions apply when the Major Class is ASF (1000b).<br>1000b Push alert/notification control register<br>Others Reserved for future definition by this specification. |
| Push Configuration | 7 | *Global Message Enable*. Set to 1b to enable the device to issue Push Alert and Asynchronous Alert Notification messages. The device clears this bit to 0b as a default and on each power-on reset. |
| | 6 | *Host Message Enable*. Set to 1b to enable the device to send its alerts to the SMBus host address (0x10). The device clears this bit to 0b as a default and on each power-on reset. |
| | 5 | *Host PEC Enable.* Set to 1b to enable the device to send its alerts to the SMBus host address (0x10) with PEC. The device clears this bit to 0b as a default and on each power-on reset. |
| | 4 | Reserved for future definition by this specification, set to 0b. |


Lenovo
Ex. 1037 - Page 58

| Field Name | Bit(s) | Meaning |
|---|---|---|
| | 3:0 | *Retry Limit*. This value defines the number of times the device will retry an SMBus message that is NACKed by the message target. If the value is 0h, the device sends each message only once with no retries; if the value is Fh, the retry limit is unlimited and the device sends each message until the target successfully receives it or the associated event clears. |
| Auxiliary Management Device Address 1 | 7:1 | *SMBus Address*. Identifies the SMBus address of a target Auxiliary Management Device other than the SMBus host. If the value is 0000 000b, no device address is specified. |
| | 0 | *Address Write Enable*. If set to 1b, the device records the SMBus Address supplied on an SMBus write message as a target of *Push Alert* or *Asynchronous Event Notification* messages; otherwise (0b), the device preserves any previously-set address. |
| Auxiliary Management Device Address 2 | 7:0 | This field uses the same format as *Auxiliary Management Device Address 1*, defined above. |

An SMBus master device uses an SMBus write block format to set the ASF sensor's configuration:

| 1 | 7 | 1 | 1 | 8 | 1 | 8 | 1 | 8 | 1 | |
|---|---|---|---|---|---|---|---|---|---|---|
| S | Slave Address | Wr | A | Command | A | Byte Count | A | Data1 | A | ••• |
| | ASF-Sensor Address | 0 | 0 | Messaging 0000 0100 | 0 | 0000 0110 | 0 | Sub Command Set Alert Configuration 0001 0001 | 0 | |

| 7 | 1 | 8 | 1 | |
|---|---|---|---|---|
| Data2 | A | Data3 | A | ••• |
| Version Number 0001 0000 | 0 | Interface Class | 0 | |

| 8 | 1 | 8 | | 1 | 8 | | 1 | 8 | 1 | 1 |
|---|---|---|---|---|---|---|---|---|---|---|
| Data4 | A | Data4 | | A | Data6 | | A | PEC | A | P |
| Push Configuration | 0 | Auxiliary Management Device Address 1 | | 0 | Auxiliary Management Device Address 2 | | 0 | [data dependent] | 0 | |

An SMBus master device uses an SMBus block-read format to read the ASF sensor's current configuration settings:

| 1 | 7 | 1 | 1 | 8 | 1 | 1 | 7 | 1 | 1 | |
|---|---|---|---|---|---|---|---|---|---|---|
| S | Slave Address | Wr | A | Command | A | S | Slave Address | Rd | A | ••• |
| | ASF-Sensor Address | 0 | 0 | Messaging 0000 0100 | 0 | | ASF-Sensor Address | 1 | 0 | |

| 8 | 1 | 8 | 1 | 8 | 1 | 8 | 1 | |
|---|---|---|---|---|---|---|---|---|
| Byte Count | A | Data1 | A | Data2 | A | Data3 | A | ••• |
| 0000 0110 | 0 | Sub Command Get Alert Configuration 0001 0010 | 0 | Version Number 0001 0000 | 0 | Interface Class | 0 | |

| 8 | 1 | 8 | 1 | 8 | 1 | 8 | 1 | 1 |
|---|---|---|---|---|---|---|---|---|
| Data4 | A | Data5 | A | Data6 | A | PEC | ~A | P |
| Push Configuration | 0 | Auxiliary Management Device Address 1 | 0 | Auxiliary Management Device Address 2 | 0 | [data dependent] | 1 | |



Lenovo
Ex. 1037 - Page 59

### *5.1.4 Watchdog Timer Support*

An ASF alert-sending device's implementation includes a watchdog timer to enable the managed client to send a PET frames if a timed period expires. The messages defined in this section enable the client system's firmware to start a timer at the beginning of a task that will possibly hang the system, with the intent that the firmware will stop that timer when the task is completed. If the firmware does not stop the timer within the time period defined on the start message, the alert-sending device uses the information present in the start message to build and transmit a PET frame — notifying the management console of the problem.

#### 5.1.4.1 Start Watchdog Timer

This message starts the watchdog timer in the alert-sending device, sets the timer's expiration time, and contains the information needed for the alert-sending device to form the PET frame if the timer expires. An alert-sending device performs the following steps when it receives a *Start Watchdog Timer* message:

1. Stop the watchdog timer, if it is currently running. The new PET frame information will overwrite the information associated with the previous *Start Watchdog Timer* message.
2. Save the PET frame information from the current message.
3. Set the timeout value to the number of seconds specified by the Timeout value in the message.
4. Start the watchdog timer.

If the timer expires, the alert-sending device builds and then sends a PET frame using the event information supplied on the most recently received *Start Watchdog Timer* message; that frame's transmission must follow the retransmission rules outlined in 3.1.1.1.

The *Timeout Value* is a two-byte field that specified the number of seconds that the alert-sending device waits before transmitting the associated PET frame. A *Start Watchdog Timer* message sender expects to send a *Stop Watchdog Timer* message within that amount of time, thus canceling the PET frame transmission. The message sender indicates a *Timeout Value* of 5 minutes (300, or 012Ch, seconds) by setting the Timeout Value Low field to 2Ch (0010 1100b) and the Timeout Value High field to 01h (0000 0001b).

| | | | | | | | | |
|---|---|---|---|---|---|---|---|---|
| 1 | 7 | 1 | 1 | 8 | 1 | 8 | 1 | |
| S | Slave Address | Wr | A | Command | A | Byte Count | A | • • • |
| | Alert-sending Device Address | 0 | 0 | Management Control 0000 0010 | 0 | 0000 1101 to 0001 0010[14] | 0 | |

| | | | | | | | | | | |
|---|---|---|---|---|---|---|---|---|---|---|
| 8 | 1 | 8 | 1 | 8 | 1 | 8 | 1 | 8 | 1 | |
| Data1 | A | Data2 | A | Data3 | A | Data4 | A | Data5 | A | • • • |
| Sub Command Start Watchdog Timer 0001 0011 | 0 | Version Number 0001 0000 | 0 | Timeout Value Low | 0 | Timeout Value High | 0 | Event Sensor Type | 0 | |

| | | | | | | | | | | | | |
|---|---|---|---|---|---|---|---|---|---|---|---|---|
| 8 | 1 | 8 | 1 | 8 | 1 | 8 | 1 | 8 | 1 | 8 | 1 | |
| Data6 | A | Data7 | A | Data8 | A | Data9 | A | Data10 | A | Data11 | A | • • • |
| Event Type | 0 | Event Offset | 0 | Event Source Type | 0 | Event Severity | 0 | Sensor Device | 0 | Sensor number | 0 | |

[14] *Byte Count* ranges from 13 to 18, depending on the number of *Event Data* bytes included (0 to 5).



Lenovo
Ex. 1037 - Page 60

| | | | | | | | |
|---|---|---|---|---|---|---|---|
| 8 | 1 | 8 | 1 | | 8 | 1 | 1 |
| Data12 | A | Data13 | A | • • • | PEC | A | P |
| Entity | 0 | Entity Instance | 0 | From zero (0) to five (5) bytes of Event Data | [data dependent] | 0 | |

### 5.1.4.2 Stop Watchdog Timer

This message stops the watchdog timer contained within the alert-sending device. If the managed client's firmware supports a system boot-failure watchdog timer (see *4.1.2.1 ASF_INFO* on page 37), the firmware issues the *Stop Watchdog Timer* command to stop the timer that is automatically started by the alert-sending device at power-on reset.

| | | | | | | | | |
|---|---|---|---|---|---|---|---|---|
| 1 | 7 | 1 | 1 | 8 | 1 | 8 | 1 | |
| S | Slave Address | Wr | A | Command | A | Byte Count | A | • • • |
| | Alert-sending Device Address | 0 | 0 | Management Control 0000 0010 | 0 | 0000 0010 | 0 | |

| | | | | | | |
|---|---|---|---|---|---|---|
| 8 | 1 | 8 | 1 | 8 | 1 | 1 |
| Data1 | A | Data2 | A | PEC | A | P |
| Sub Command Stop Watchdog Timer 0001 0100 | 0 | Version Number 0001 0000 | 0 | [data dependent] | 0 | |

## *5.1.5 Push Alert Messages*

These messages enable other SMBus masters to "push" a message containing PET frame information to an alert-sending device; the alert-sending device builds and transmits the message. Each message is variable in length to enable the initiator's use of the optional *Event Data* fields — up to five (5) bytes.

If the alert-sending device is either temporarily unable to handle the message or unable to send the requested PET frame because the device's transport media is down, the device must NACK the message according to [SMBUS_2.0] definitions. The managed client's firmware might choose to wait for the ASF alert-sending device to establish connection with its transport media. For example, an Ethernet device might require additional time from a cold power-on to establish a network connection. See *Get Power-on Wait Time (GPWT)* and *Set Power-on Wait Time (SPWT)* for the system methods through which the alert-sending device's OS-present configuration software records its required values.

### 5.1.5.1 Message with Retransmission

If the alert-sending device is either temporarily unable to handle the message or unable to send the requested PET frame because the device's transport media is down, the device must NACK the message according to [SMBUS_2.0] definitions. Otherwise, the PET frame's transmission follows the retransmission rules outlined in section 3.1.1.1.

| | | | | | | | |
|---|---|---|---|---|---|---|---|
| 1 | 7 | 1 | 1 | 8 | 1 | | |
| S | Slave Address | Wr | A | Command | A | | • • • |
| | Alert-sending Device Address | 0 | 0 | Messaging 0000 0100 | 0 | | |

| | | |
|---|---|---|
| 8 | 1 | |
| Byte Count | A | • • • |
| 0000 1011 to 0001 0000[15] | 0 | |

[15] *Byte Count* ranges from 11 to 16, depending on the number of *Event Data* bytes included (0 to 5).



Lenovo
Ex. 1037 - Page 61

| | | | | | | | | |
|---|---|---|---|---|---|---|---|---|
| 8 | 1 | 8 | 1 | 8 | 1 | 8 | 1 | |
| Data1 | A | Data2 | A | Data3 | A | Data4 | A | • • • |
| Sub Command Retransmit 0001 0101 | 0 | Version Number 0001 0000 | 0 | Event Sensor Type | 0 | Event Type | 0 | |

| | | | | | | | | |
|---|---|---|---|---|---|---|---|---|
| 8 | 1 | 8 | 1 | 8 | 1 | 8 | 1 | |
| Data5 | A | Data6 | A | Data7 | A | Data8 | A | • • • |
| Event Offset | 0 | Event Source Type | 0 | Event Severity | 0 | Sensor Device | 0 | |

| | | | | | | | | | |
|---|---|---|---|---|---|---|---|---|---|
| 8 | 1 | 8 | 1 | 8 | 1 | | 8 | 1 | 1 |
| Data9 | A | Data10 | A | Data11 | A | • • • | PEC | A | P |
| Sensor Number | 0 | Entity | 0 | Entity Instance | 0 | From zero (0) to five (5) bytes of Event Data | [data dependent] | 0 | |

### 5.1.5.2 Message without Retransmission

This message causes the alert-sending device to transmit a single, un-retransmitted PET frame. If the alert-sending device is either temporarily unable to handle the message or unable to send the requested PET frame because the device's transport media is down, the device must NACK the message according to [SMBUS_2.0] definitions; otherwise, the device sends the single-frame transmission.

| | | | | | | | | |
|---|---|---|---|---|---|---|---|---|
| 1 | 7 | 1 | 1 | 8 | 1 | 8 | 1 | |
| S | Slave Address | Wr | A | Command | A | Byte Count | A | • • • |
| | Alert-sending Device Address | 0 | 0 | Messaging 0000 0100 | 0 | 0000 1011 to 0001 0000[15] | 0 | |

| | | | | | | | | |
|---|---|---|---|---|---|---|---|---|
| 8 | 1 | 8 | 1 | 8 | 1 | 8 | 1 | |
| Data1 | A | Data2 | A | Data3 | A | Data4 | A | • • • |
| Sub Command No Retransmit 0001 0110 | 0 | Version Number 0001 0000 | 0 | Event Sensor Type | 0 | Event Type | 0 | |

| | | | | | | | | |
|---|---|---|---|---|---|---|---|---|
| 8 | 1 | 8 | 1 | 8 | 1 | 8 | 1 | |
| Data5 | A | Data6 | A | Data7 | A | Data8 | A | • • • |
| Event Offset | 0 | Event Source Type | 0 | Event Severity | 0 | Sensor Device | 0 | |

| | | | | | | | | | |
|---|---|---|---|---|---|---|---|---|---|
| 8 | 1 | 8 | 1 | 8 | 1 | | 8 | 1 | 1 |
| Data9 | A | Data10 | A | Data11 | A | • • • | PEC | A | P |
| Sensor Number | 0 | Entity | 0 | Entity Instance | 0 | From zero (0) to five (5) bytes of Event Data | [data dependent] | 0 | |

## 5.2 Boot Option Messages

### *5.2.1 Get Boot Options*

This message, which uses the SMBus Block Read Protocol with PEC, is used by the managed client's firmware to retrieve the options sent over the network to the alert-sending device via the RMCP commands *Reset (10h), Power-up (11h), and Power Cycle Reset (13h).* A managed client that supports ASF-RMCP commands includes firmware that reports these results in an ASF_RMCP ACPI structure.

The alert-sending device responds with one of two sub-commands to the *Get Boot Options* message, depending on whether the device has received one of the ASF-RMCP Boot Options commands (*Reset (10h), Power-up (11h), and Power Cycle Reset (13h)*) since the device last received an SMBus Clear Boot Options message. If so, the device returns the *Return Boot Options* sub-command along with the boot options values included in the ASF-RMCP command; otherwise, the device returns the *No Boot Options* sub-command.

***Note***: Managed client firmware that supports ASF-RMCP should

1. Get the boot options as soon as practical during the boot process and subsequently clear the options. This ensures that the boot options have a *single-boot lifetime*.



Lenovo
Ex. 1037 - Page 62

2. Verify that the system boot was initiated by an ASF-RMCP command prior to taking any action indicated by the Boot Options returned by this SMBus command.

#### 5.2.1.1 Return Boot Options Response

Refer to section 5.2.1 for a full description of the conditions under which this *Get Boot Options* response is returned by an alert-sending device.

| | | | | | | | | | | |
|---|---|---|---|---|---|---|---|---|---|---|
| 1 | 7 | 1 | 1 | 8 | 1 | 1 | 7 | 1 | 1 | |
| S | Slave Address | Wr | A | Command | A | S | Slave Address | Rd | A | • • • |
| | Alert-sending Device Address | 0 | 0 | ASF Configuration 0000 0011 | 0 | | Alert-sending Device Address | 1 | 0 | |

| | | | | | | | | |
|---|---|---|---|---|---|---|---|---|
| 8 | 1 | 8 | 1 | 8 | 1 | 8 | 1 | |
| Byte Count | A | Data1 | A | Data2 | A | Data3 | A | • • • |
| 0000 1101 | 0 | Sub Command Return Boot Options 0001 0110 | 0 | Version Number 0001 0000 | 0 | IANA ID Byte 1 | 0 | |

| | | | | | | | | | |
|---|---|---|---|---|---|---|---|---|---|
| 8 | 1 | 8 | 1 | 8 | 1 | 8 | 1 | 8 | |
| Data4 | A | Data5 | A | Data6 | A | Data7 | A | Data8 | • • • |
| IANA ID Byte 2 | 0 | IANA ID Byte 3 | 0 | IANA ID Byte 4 | 0 | Special Command | 0 | Special Command Parameter, High Byte | |

| | | | | | | | | | | |
|---|---|---|---|---|---|---|---|---|---|---|
| 1 | 8 | 1 | 8 | 1 | 8 | 1 | 8 | 1 | |
| A | Data9 | A | Data10 | A | Data11 | A | Data12 | A | • • • |
| 0 | Special Command Parameter, Low Byte | 0 | Boot Options Bit Mask Byte 1 | 0 | Boot Options Bit Mask Byte 2 | 0 | OEM Parameter Byte 1 | 0 | |

| | | | | |
|---|---|---|---|---|
| 8 | 1 | 8 | 1 | 1 |
| Data13 | A | PEC | ~A | P |
| OEM Parameter Byte 2 | 0 | [data dependent] | 1 | |

#### 5.2.1.2 No Boot Options Response

Refer to section 5.2.1 for a full description of the conditions under which this *Get Boot Options* response is returned by an alert-sending device.

| | | | | | | | | | | |
|---|---|---|---|---|---|---|---|---|---|---|
| 1 | 7 | 1 | 1 | 8 | 1 | 1 | 7 | 1 | 1 | |
| S | Slave Address | Wr | A | Command | A | S | Slave Address | Rd | A | • • • |
| | Alert-sending Device Address | 0 | 0 | ASF Configuration 0000 0011 | 0 | | Alert-sending Device Address | 1 | 0 | |

| | | | | | | | | |
|---|---|---|---|---|---|---|---|---|
| 8 | 1 | 8 | 1 | 8 | 1 | 8 | 1 | 1 |
| Byte Count | A | Data1 | A | Data2 | A | PEC | ~A | P |
| 0000 0010 | 0 | Sub Command No Boot Options 0001 0111 | 0 | Version Number 0001 0000 | 0 | [data dependent] | 1 | |

### *5.2.2 Boot Options Clear*

This message is used by the system firmware to clear the boot options held by the alert-sending device. Managed clients that support ASF-RMCP Boot Options commands include firmware that issues this message to an alert-sending device after retrieving any boot options from the device using the *Get Boot Options* message.

| | | | | | | | | | | |
|---|---|---|---|---|---|---|---|---|---|---|
| 1 | 7 | 1 | 1 | 8 | 1 | 8 | 1 | | | |
| S | Slave Address | Wr | A | Command | A | Byte Count | A | | | • • • |
| | Alert-sending Device Address | 0 | 0 | ASF Configuration 0000 0011 | 0 | 0000 0010 | 0 | | | |



Lenovo
Ex. 1037 - Page 63

| 8 | 1 | 8 | 1 | 8 | 1 | 1 |
|---|---|---|---|---|---|---|
| Data1 | A | Data2 | A | PEC | A | P |
| Sub Command<br>Clear Boot Options<br>0001 0101 | 0 | Version Number<br>0001 0000 | 0 | [data dependent] | 0 | |

## 5.3 Discovery and Status Messages

### *5.3.1 Device Type Poll Message*

The Device Type Poll message allows an SMBus master to further determine the characteristics of an SMBus 2.0 device that responds to an ARP cycle with the ASF bit of its Interface byte set to 1. The device, currently either an ASF-sensor or an alert-sending device, returns its ASF Function Bits:

**Bit(s)** **Meaning**

7:4 Reserved for future assignment by this specification, set to 00b.

3 Set to 1b if the alert-sending device's transport media is valid, or up. This bit is always 0b for ASF-sensor devices.

2 Set to 1b if the alert-sending device has been configured with the information required to send PET frames. This bit is always 0b for ASF-sensor devices.

1:0 ASF Device Type, set to one of the following enumerated values:

- 11b Reserved for future definition by this specification.
- 10b The device is an ASF-sensor.
- 01b The device is an alert-sending device.
- 00h Reserved for future definition by this specification.

| 1 | 7 | 1 | 1 | 8 | 1 | 1 | 7 | 1 | 1 | 8 | 1 | |
|---|---|---|---|---|---|---|---|---|---|---|---|---|
| S | Slave Address | Wr | A | Command | A | S | Slave Address | Rd | A | Byte Count | A | ••• |
| | ASF Device Address | 0 | 0 | Sensor Device<br>0000 0001 | 0 | | ASF Device Address | 1 | 0 | 0000<br>0011 | 0 | |

| 8 | 1 | 8 | 1 | 8 | 1 | 8 | 1 | 1 |
|---|---|---|---|---|---|---|---|---|
| Data1 | A | Data2 | A | Data3 | A | PEC | ~A | P |
| Sub Command<br>Device Type Poll<br>0001 0011 | 0 | Version Number<br>0001 0000 | 0 | ASF Function Bits | 0 | [data dependent] | 1 | |

### *5.3.2 Set System State Message*

This message is used by the managed client's firmware to record the client's current *System State* into an alert-sending device. The alert-sending device reports the *System State* written by this message in subsequently issued ASF-RMCP *System State Response (42h)* messages; section 3.2.3.5 defines the format of the *System State* byte.

***Note***: The alert-sending device is responsible for maintaining the *System State* information. After a reset, the alert-sending device reports the value as *Unknown* (1110b) until the device receives the first *Set System State* message.

The *Set System State* message format is as follows:

| 1 | 7 | 1 | 1 | 8 | 1 | 8 | 1 | 8 | 1 | |
|---|---|---|---|---|---|---|---|---|---|---|
| S | Slave Address | Wr | A | Command | A | Byte Count | A | Data1 | A | ••• |
| | Alert-sending Device Address | 0 | 0 | System State<br>0000 0001 | 0 | 0000 0011 | 0 | Sub Command<br>Set System State<br>0001 1000 | 0 | |



Lenovo
Ex. 1037 - Page 64

| | | | | | | |
|---|---|---|---|---|---|---|
| 8 | 1 | 8 | 1 | 8 | 1 | 1 |
| Data 2 | A | Data3 | A | PEC | A | P |
| Version Number 0001 0000 | 0 | System State | 0 | [data dependent] | 0 | |

## 5.4 Remote-Control Device Action Message

An alert-sending device forces a remote control action to the managed client via a Remote-Control Device Action message. If the managed client supports ASF-RMCP remote-control actions, the client's firmware publishes the remote-control device types and addresses via an ASF-defined ACPI data structure (see *4.1.2.4* ASF_RCTL). That data structure contains the *Control Device Address*, *Control Command*, and *Control Data Value* fields that the alert-sending device uses in the SMBus message to force the device action.

The data returned by that ACPI control method indicates whether or not a remote-control device's command must include a PEC. An alert-sending device uses the SMBus Byte Write command to initiate the remote-control action, either

… without a PEC:

| | | | | | | | | |
|---|---|---|---|---|---|---|---|---|
| 1 | 7 | 1 | 1 | 8 | 1 | 8 | 1 | 1 |
| S | Slave Address | Wr | A | Command | A | Write Data | A | P |
| | Control Device Address | 0 | 0 | Control Command | 0 | Control Data Value | 0 | |

… or with a PEC:

| | | | | | | | | | | |
|---|---|---|---|---|---|---|---|---|---|---|
| 1 | 7 | 1 | 1 | 8 | 1 | 8 | 1 | 8 | 1 | 1 |
| S | Slave Address | Wr | A | Command | A | Write Data | A | PEC | A | P |
| | Control Device Address | 0 | 0 | Control Command | 0 | Control Data Value | 0 | [data dependent] | 0 | |

## 5.5 Legacy Sensor Device Alert Poll Message

An alert-sending device polls legacy sensors to determine if status bits are set, indicating that an alert should be sent. If the managed client supports ASF legacy-device alerts, the client's firmware publishes the legacy-device configuration and access information via an ASF-defined ACPI data structure (see *4.1.2.2 ASF_ALRT*). That structure contains the *Alert Device Address* and *Alert Command* fields that the alert-sending device uses in the SMBus message to read the legacy-device's current status. The control method's returned data also identifies compare conditions as well as PET field data that the alert-sending device uses to format a PET frame if the specified condition is active. See section 6.1.2 for additional information regarding the methods an alert-sending device uses in the polling of legacy-device sensors.

The format of the message is an SMBus Byte Read transaction:

***Caution***: This command is a Byte Read — an atomic write/read command. This is different than a combination of 2 separate commands: Send Byte and Receive Byte. To avoid multi-master problems, the atomic Byte Read must be used instead of the 2 individual commands.

| | | | | | | | | | | | | |
|---|---|---|---|---|---|---|---|---|---|---|---|---|
| 1 | 7 | 1 | 1 | 8 | 1 | 1 | 7 | 1 | 1 | 8 | 1 | 1 |
| S | Slave Address | Wr | A | Command | A | S | Slave Address | Rd | A | Read Result | ~A | P |
| | Legacy Sensor Device Address | 0 | 0 | Alert Command | 0 | | Legacy Sensor Device Address | 1 | 0 | | 1 | |



Lenovo
Ex. 1037 - Page 65

# 6 SMBus Device Characteristics

This section describes the behavior and requirements for SMBus devices that are defined by this specification, ASF-sensor, legacy-sensor, and remote-control devices. The primary differences between these device types are summarized below.

Legacy-sensor devices

- No well-defined or commonly accepted hardware interface for providing device information (e.g. manufacturer, class, etc.)
- Primitive mechanisms for generating and clearing alert events
- No standard alert information associated with hardware events
- Only supports fixed slave addresses

ASF-sensor devices

- Well-defined hardware interface for providing device information
- A standard and consistent method for generating alert events regardless of sensor type
- A standard SMBus packet format for processing alert events
- Support for fixed address devices (i.e. system-resident) and dynamically addressed devices (i.e. ARP-capable; PCI add-in card-resident)

Remote Control devices

- A defined SMBus transaction type (Byte Write).
- System defined values for various remote control actions.

## 6.1 Legacy Sensor Devices

If legacy sensor devices are included in an ASF managed client's implementation, the client's firmware identifies the characteristics and access methods for the devices via the *ASF_ALRT* ACPI data structure.

### *6.1.1 Sensor Requirements*

To limit the scope of sensors supported by an alert-sending device, the following behavior must be apply for a legacy-sensor device to be used in an ASF environment:

1. The alerts must be poll-able by doing an SMBus Byte Read message.
2. Individual status bits in the Byte Read's Read Result value must identify the alerts.
3. The alert status bits must be either:
   A. Level (always indicating the current status), or
   B. Automatically cleared after the Byte Read is done, but set again before the next Byte Read if the event is still active. The legacy-sensor device must clear the status within the Minimum Legacy Sensor Poll Time specified by the managed client's firmware, see 4.1.2.2 for more information.



Lenovo
Ex. 1037 - Page 66

4. All status bits returned by the device (in the *Read Result* data byte response to an SMBus Byte Read message) that are set to 1b within the device's ASF_ALERTDATA *Alert Data Mask* must always be valid, regardless of the power state of the function monitored by that status bit. For example, if a bit indicates a CPU voltage low error, that bit must return 0b when the system is in a sleep state and the CPU is not powered or a false error will result. Alternatively, the implementation might cause the device to not respond to polling (by responding with a NACK to its SMBus address) during a low-power, sleep, or standby state. In this case, the alert-sending device will skip updating its event state information for this device until the device again responds to polling.

   It is the managed client's responsibility to guarantee that the sensor reports valid data for each supported power state or that the sensor does not respond to polling cycles in the unsupported power states. This may be accomplished by hardware or software mechanisms.

   ***Note***: If the implementation elects to have a device stop responding, it is the system's responsibility to ensure that the alert-sending device does not get corrupted data if a power transition occurs during a legacy sensor polling cycle.

### 6.1.2 Usage of Firmware Legacy Sensor Device Alert Information

An alert-sending device, acting as an SMBus master, periodically polls the legacy sensor device associated with each entry in the data structure described in section 4.1.2.3. Each entry contains the *Alert Device Address* and *Alert Command* values that an alert-sending device sets in an SMBus *Legacy Sensor Device Alert Poll Message* as defined in section 5.5. These poll cycles are use to see whether the condition specified by the entry has been asserted.

This process assumes two variables, ***current*** and ***past***. The ***past*** variable must be set to 00h by the alert-sending device when the device is reset.

The alert-sending device uses the procedure described below for each entry in the ASF_ALERTDATA structure:

1. Use the SMBus Read Byte protocol with the SMBus *Slave Address* field set to the entry's *Alert Device Address* value and the SMBus *Command Code* field set to the entry's *Alert Command* value.
2. Perform a bit-wise AND of the SMBus message's *Read Result* with the entry's *Alert Data Mask* value. The result of this operation is the ***current*** status.
3. Determine whether an assertion event has occurred or not. If so, the alert-sending device sends a PET frame that includes the Alert PET-related information in the entry. An assertion event has occurred if either of the following cases (A or B) are true:
   A. Bit Mask Assertion Event – true if all of the following are true:
      i) Bit 0 of the entry's *Alert Device Address* field is cleared (0b).
      ii) A bit in the ***current*** status is set and the entire ***past*** status is cleared.
   B. Compare Byte Assertion Event – true if all of the following are true:
      i) Bit 0 of the entry's *Alert Device Address* field is set (1b).
      ii) A bit in the ***current*** status is different than the corresponding bit in the ***past*** status.
      iii) The ***current*** value matches the entry's *Alert Compare Value*.
4. Determine whether a de-assertion event has occurred or not. If so, the alert-sending device sends a PET frame that includes the PET-related information in the entry and sets the de-assertion bit (bit 7) within the PET frame's *Event Offset* field.. A de-assertion event has occurred if either of the following cases (A or B) are true:
   A. Bit Mask De-assertion Event – true if all of the following are true:
      i) Bit 0 of the entry's *Alert Device Address* field is cleared (0b).
      ii) The entire ***current*** status is cleared and any bit in the ***past*** status is set.
   B. Compare Byte De-assertion Event – true if all of the following are true:


Lenovo
Ex. 1037 - Page 67

i) Bit 0 of the entry's *Alert Device Address* field is set (1b).

ii) A bit in the ***current*** status is different than the corresponding bit in the ***past*** status.

iii) The ***current*** value does ***not*** match the entry's *Alert Compare Value* and the ***past*** value does match the entry's *Alert Compare Value*.

5. The ***current*** status is copied into the ***past*** status.

## 6.2 ASF-Sensor Devices

An ASF-Sensor device must meet the requirements detailed in this section and implement the following ASF SMBus commands:

- Get Event Data message for ASF Sensors (section 5.1.1.1)
- Get Event Status message for ASF Sensors (section 5.1.1.2)
- Device Type Poll message (section 5.3.1)

This specification recommends that an ASF-sensor support all SMBus 2.0 protocols, including those required for discovery via ARP. Lower-cost, fixed-address ASF-sensor devices can be "discovered" by an alert-sending device via the managed client's firmware methods, see section 4 for more information.

***Note***: Some SMBus 1.x and 2.0 host controllers do not support the SMBus 2.0 "Block Write-Block Read Process Call" transaction necessary to issue the *Get Event Data* and *Get Event Status* messages. An ASF-sensor designer might want to take this into consideration and design an alternate interface to enable the host controller to access the device's event status and data.

### *6.2.1 Device Identification*

New sensor devices must implement the 128-bit Unique Device Identifier (UDID) as defined by [SMBUS_2.0]. New sensor devices that have fixed addresses are not required to support the full ARP command set; support for the *directed Get UDID* command is the only requirement. If a fixed-address device is not discoverable, the managed client's firmware publishes the device's fixed address in the *ASF_ADDR* information record.

***Recommended***: New fixed-address ASF-sensor devices support the ARP commands necessary to support device discovery.

The UDID content is summarized below, but the format and content is controlled by [SMBUS_2.0].

| 8 bits | 8 bits | 16 bits | 16 bits | 16 bits | 16 bits | 16 bits | 32 bits |
|---|---|---|---|---|---|---|---|
| Device Capabilities | Version / Revision | Vendor ID | Device ID | Interface | Subsystem Vendor ID | Subsystem Device ID | Vendor Specific ID |

**MSB** **LSB**

| | |
|---|---|
| **Device Capabilities** | Describes the device's capabilities, including the device's address type and PEC support indications. |
| **Version / Revision** | UDID version number, and silicon revision identification. |
| **Vendor ID** | The device manufacturer's ID as assigned by the SBS Implementers' Forum or the PCI SIG. |
| **Device ID** | The device ID as assigned by the device manufacturer (identified by the Vendor ID field). |
| **Interface** | Identifies the protocol layer interfaces supported over the SMBus connection by the device. For example, ASF (bit 5) and IPMI. |



Lenovo
Ex. 1037 - Page 68

| | |
|---|---|
| **Subsystem Vendor ID** | This field may hold a value derived from any of several sources:<br>• The device manufacturer's ID as assigned by the SBS Implementers' Forum or the PCI SIG.<br>• The device OEM's ID as assigned by the SBS Implementers' Forum or the PCI SIG.<br>• A value that, in combination with the Subsystem Device ID, can be used to identify an organization or industry group that has defined a particular common device interface specification. |
| **Subsystem Device ID** | The subsystem ID identifies a specific interface, implementation, or device. The party identified by the Subsystem Vendor ID field defines the Subsystem ID. |
| **Vendor-specific ID** | A unique number per device. |

### *6.2.2 Event Generation and Clearing*

Events reported by an ASF sensor must be level events from the alert-sending device perspective. This behavior allows the Alert Sending Device to detect the state transitions and send assertion and de-assertion alerts, and allows a managed client to include multiple alert-sending devices.

An implementer may choose to design a "sticky" event that requires a mechanism to be cleared. In these cases, the clear mechanism is outside the scope of the ASF specification. An example of a desired "sticky" event is a "chassis intrusion" detection circuit.

***Note***: Events monitored under the ASF context are intended to be low frequency and generally stable and monotonic. This is a general requirement due to the uncertain speed of the SMBus. This specification does not limit the event transition frequency of a sensor's event. Instead, implementers are recommended to implement "sticky" events where critical events may have a transition frequency that may allow the event to go undetected.

### *6.2.3 Alert Status*

ASF-sensor devices will implement event generation and clearing with the following behavior:

- Sensor must contain an active-high, level-sensitive status register bit for each event; the sensor may also optionally implement an edge-triggered status bit for host system notification and event processing.
- The alert-sending device (e.g. NIC) is responsible for edge-detection of an event (i.e. the alert-sending device must recognize when the alert event is first generated).
- "Sticky" event status bits are cleared by the mechanisms unique to the managed client system (e.g. BIOS, DMI, CIM). The alert-sending device is not required to clear sticky event status.

Illustrated below is a conceptual example of an alert event logic structure with the optional edge-triggered bit for the host. For one event there are two register bits within the sensor device. The bit in the Poll Alert Register is simply the level-sensitive event. The bit in the Host Alert Register is implemented as a "sticky" bit; this bit is set when the event transitions from inactive to active and can only be cleared by some action taken by the host. This bit could also feed additional logic to generate a host system interrupt.



Lenovo
Ex. 1037 - Page 69

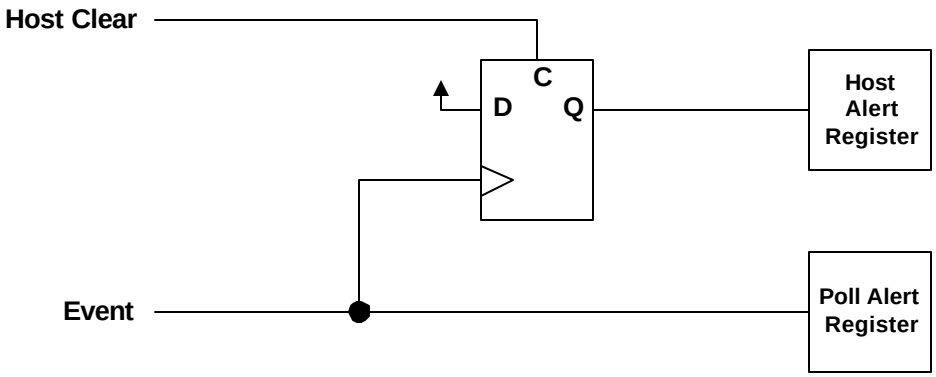


### 6.2.4 Device Power On Reset Time

ASF-sensor and remote-control devices are allowed up to 500ms to complete their Power On Reset once they have detected that their supply power is stable. These devices don't appear on the SMBus (i.e. a NACK is generated for the associated slave address) before the device is prepared to communicate.

***Note***: Alert-sending devices that begin communicating over the SMBus after auxiliary power has stabilized but before main power has stabilized must tolerate a change in available devices; there may be a mix of auxiliary powered and main powered types.

## 6.3 Remote Control Device

If remote-control devices are included in an ASF managed client's implementation, the client's firmware identifies the characteristics and access methods for the devices via the ASF_RCTL ACPI data structure.

### 6.3.1 Device Requirements

Beyond the SMBus transaction requirements in section 5.4, remote-control devices must meet the following requirements:

1. The remote control actions must be write-able by doing an SMBus Byte Write transaction.
2. The remote control action must be initiated immediately by the managed client system's hardware after the *Remote-Control Device Action Message* is issued by the alert-sending device.
3. The remote control actions must work independent of local client software support.

### 6.3.2 Usage of Firmware Remote Control Device Information

An alert-sending device, acting as an SMBus master, will issue SMBus Remote Control actions when the appropriate RMCP remote control packet is received (see 3.2.3.1 and 3.2.3.2 for more information). For the appropriate remote control action, the ASF_RCTL fields *Control Device Address*, *Control Command*, and *Control Data Value* are used for the SMBus *Device Address*, *Command*, and *Data Write*, respectively. Additionally, bit 0 of the ASF_RCTL *Control Device Address* field determines whether (1) or not (0) a PEC is appended to the Byte Write command by the alert-sending device.

### 6.3.3 Remote Control Functions

The remote control functions supported by this specification are defined here; the duration of each of these operations is managed client system-specific.

**Reset**



Lenovo
Ex. 1037 - Page 70

The reset function causes a low latency reset of the system. This reset must, at a minimum, reset the host processor(s) and cause PCI Reset# to be asserted so that all devices on the PCI bus are initialized.

If supported, the reset function is required to produce the reset in these system states:

- *S0/G0 "working"*
- *S1*
- *S2*
- *S3*
- *Legacy ON* state.
- *Sleeping in an S1, S2, or S3 state, or Legacy SLEEP*
- *G1 sleeping*

Operation in all other system states is undefined by this specification.

**Power-Up**

The power-up function brings a sleeping system into the *S0/G0 "working"* state or into the *Legacy ON state*.

If supported, the power-up function is required to produce the power-up in any of these sleeping states:

- *S4*
- *S5/G2*
- *S4/S5 soft-off*
- *S5 entered by override*
- *Legacy OFF*

Operation in all other system states is undefined by this specification.

**Unconditional Power-Down**

The unconditional power-down function forces the system into an *S5 entered by override* or a *Legacy OFF* powered off state. This power-down occurs without any blocking from software or the system. Because of this, ACPI and system state context is not guaranteed to be preserved.

The unconditional power-down function is required to produce the power-down in these system states:

- *S0/G0 "working"*
- *S1*
- *S2*
- *S3*
- *Legacy ON* state
- *Sleeping in an S1, S2, or S3 state, or Legacy SLEEP*
- *G1 sleeping*

Operation in all other system states is undefined by this specification.

**Power Cycle Reset**

The power cycle reset function causes a hard reset of the system. This reset must be functionally equivalent to an Unconditional Power-Down operation, followed by a Power Up operation.

If supported, the power cycle reset function is required to produce the reset in these system states:

- *S0/G0 "working"*
- *S1*
- *S2*



Lenovo
Ex. 1037 - Page 71

- *S3*
- *Legacy ON* state
- *Sleeping in an S1, S2, or S3 state, or Legacy SLEEP*
- *G1 sleeping*.

Operation in all other system states is undefined by this specification.



Lenovo
Ex. 1037 - Page 72

# Appendix A Additions to PET Specification 1.0

## A.1 Modem Support

There needs to be a new entry for the Trap Source Type and Event Source type for Modems. 60h – 67h

## A.2 Battery Sensor

To support system battery-related events a new Event Sensor Type along with a set of Sensor-specific Offsets should be added as follows:

| | | | |
|---|---|---|---|
| Battery | 29h | 00h | Battery low |
| | | 01h | Battery failure |
| | | 02h | Battery removed |

## A.3 System Firmware Error/Progress Descriptor

To support industry-standard system progress and error handling, the "POST Error" Sensor Type defined by [PET_1.0] is renamed and extended as described below.

| Sensor Type | Sensor Type Code | Sensor-specific Offset | Event |
|---|---|---|---|
| System Firmware Error/Progress Descriptor | 0Fh | 00h | Standard System Firmware Error. The Event Data 2 field contains a further error descriptor, as described in *3.1.5.2 System Firmware Error Events* |
| | | 01h | Standard System Firmware Hang. The Event Data 2 field contains a further error descriptor, as described in *3.1.5.3 System Firmware Progress Events*. |
| | | 02h | Standard System Firmware Progress. The Event Data 2 field contains a further progress descriptor, as described in *3.1.5.3 System Firmware Progress Events*. |
| | | 03h | OEM-specific System Firmware Error. |
| | | 04h | OEM-specific System Firmware Hang Error |
| | | 05h | OEM-specific System Firmware Progress |

## A.4 Device Relative Entity Instances

The present PET specification defines an Entity Instance number that identifies different instances of the same entity type in the system. For example, if you have three fans, the entity instance value allows you to tell one fan from another by allowing an Entity Instance number to be assigned. Typically, a system with three fans would assign instance numbers 1, 2, and 3 to the fans - though there is no requirement that instance numbers be consecutive or sequential starting from 1.

The Entity Instance numbers are presently assigned relative to the entire *system.* Which means that a given number can only be used once in the entire system. This leads to a problem for add-in devices, or pre-configured sub-systems. For example, you could not pre-assign entity instance numbers to entities on an add-in card, because if you put two identical cards in the system, their instance numbers would conflict.

Thus, the definition of Entity Instance number needs to be changed to allow sensor device relative instance numbers. The following table shows the proposed change to accomplish this by splitting the entity instance number into two ranges: one for system relative and another for sensor device relative.

**Table , Entity Instance Number**



Lenovo
Ex. 1037 - Page 73

| Bit | Description |
|---|---|
| 7 | 0 = physical entity, 1 = logical entity |
| 6:0 | Entity Instance number<br>00h-5Fh = system relative<br>60h-7Fh = sensor device relative |

*00h-5Fh = System Relative. Instance number must be unique for each different entity of type Entity ID in the system. This range is used for devices that have a fixed enumeration (i.e. Not add in cards)*

*60h-7Fh = Sensor Device Relative. Instance number is unique for each different entity of type Entity ID for the sensor device that provides access to the sensors for the entity. The entity is uniquely identified by the combination of the Sensor Device number and the Entity Instance number.*

Note that when using a Sensor Device Relative instance number, all sensors for the entity must be provided by one sensor device. Otherwise, it may appear that there are more instances of the entity than are actually present. For example, suppose an add-in card has monitoring for both fan current and fan speed for a single fan. If the fan current was monitored via sensor device 2 and the fan speed monitored via sensor device 1, then the trap for fan current would return sensor device number 1 and a trap for fan speed would return sensor device number 2. Because the sensor device number is now part of what identifies a unique entity, software would view these traps as being from different fans, even if the Sensor Device Relative instance number were the same.

## A.5 Event Source Type

A range for an ASF Event Source Type must be added to the PET specification to support the proper PET frame from an ASF entity. This text below is the proposed addition to the Event Source Type definition of the PET specification:

*ASF* *68h – 6Fh*

## A.6 Sensor Type = 23h (Watchdog 2) Updates

This sensor type defines Event Data 2 values that further describe the system state at the time of the watchdog event. The possible values for the “timer use at expiration”, present in bits 3:0 of this field must be extended to provide a discrete code to describe a system boot failure:

6h = System boot failure.

## A.7 IPMI 1.0 Entity IDs

A mismatch between [PET_1.0] and [IPMI_1.0] was found in the Entity IDs table. The following changes are required to make [PET] match [IPMI_1.0]:

| Code | Entity |
|---|---|
| 19d | power unit / power domain (typically used as a pre-defined logical entity for grouping power |
| 20d | power module / converter |
| 21d | power management / power distribution board |
| 22d | chassis back panel board |
| 23d | system chassis |
| 24d | sub-chassis |
| 25d | Other chassis board |
| 26d | Disk Drive Bay |
| 27d | Peripheral Bay |



Lenovo
Ex. 1037 - Page 74

| | |
|---|---|
| 28d | Device Bay |
| 29d | fan / cooling device |
| 30d | cooling unit (can be used as a pre-defined logical entity for grouping fans or other cooling devices) |
| 31d | cable / interconnect |
| 32d | memory device (This Entity ID should be used for replaceable memory devices, e.g. DIMM/SIMM. It is recommended that Entity IDs not be used for individual non-replaceable memory devices. Rather, monitoring and error reporting should be associated with the FRU [e.g. memory card] holding the memory.) |
| 33d | System Management Software |
| 34d | BIOS |
| 35d | Operating System |
| 36d | system bus |
| 37d | Group - this is a logical entity for use with Entity Association records. It is provided to allow a sensor data record to point to an Entity-association record when there is no appropriate pre-defined logical entity for the entity grouping. This Entity should not be used as a physical entity. |

## A.8 Entity and Sensor support for Alert Sending Devices

This value is added to the Entity ID table to allow for better reporting from an ASF Sending Device:

| Code | Entity |
|---|---|
| 38d | Out of Band (OOB) Management Communication Device |

This value is added to the Sensor Types table to allow for better reporting from an ASF Sending Device:

| Sensor Type | Sensor Type Code | Sensor-Specific Offset | Event |
|---|---|---|---|
| Management Subsystem Health | 28h | - | - |



Lenovo
Ex. 1037 - Page 75

# Appendix B ASF Entity Section Map

This section identifies the relevant ASF specification sections for each type of ASF entity:

## B.1 Alert Sending Device

3.1.1 PET Frame Behavior
3.1.2 Agent Address Field
3.1.3 Specific Trap Field
3.1.4 Variable Bindings Fields
3.1.5.5 System Heartbeat
3.1.5.6 System Boot Failure

RMCP Packet Format
3.2.3 ASF RMCP Message Types
3.2.4 RMCP Usage Scenarios
4.1.2.1 ASF_INFO
4.1.2.2 ASF_ALRT
4.1.2.3 ASF_ALERTDATA
4.1.2.5 ASF_CONTROLDATA
5 ASF SMBus Messages
5.1.1.1 Get Event Data
5.1.1.2 Get Event Status
5.1.4.1 Start Watchdog Timer
5.1.4.2 Stop Watchdog Timer
5.1.5.1 Message with Retransmission
5.1.5.2 Message without Retransmission
5.2.1 Get Boot Options
5.2.1.1 Return Boot Options
5.2.1.2 No Boot Options
5.2.2 Boot Options Clear
5.3.1 Device Type Poll Message

6 SMBus Device Characteristics
6.1.1 Sensor Requirements
6.1.2 Usage of Firmware Legacy Sensor Device Alert Information
6.2 ASF-Sensor Devices
6.2.1 Device Identification
6.2.2 Event Generation and Clearing
6.2.3 Alert Status
6.2.4 Device Power On Reset Time
6.3.1 Device Requirements
6.3.2 Usage of Firmware Remote Control Device Information
6.3.3 Remote Control Functions

## B.2 Legacy Sensor

4.1.2.2 ASF_ALRT
4.1.2.3 ASF_ALERTDATA

6 SMBus Device Characteristics
6.1.1 Sensor Requirements

## B.3 ASF Sensor

3.1.3 Specific Trap Field


Lenovo
Ex. 1037 - Page 76

3.1.4 Variable Bindings Fields
3.1.5.1 Environmental Events
4.1.2.1 ASF_INFO
5.1.1.1 Get Event Data
5.1.1.2 Get Event Status
6 SMBus Device Characteristics
6.2 ASF-Sensor Devices
6.2.1 Device Identification
6.2.2 Event Generation and Clearing
6.2.3 Alert Status
6.2.4 Device Power On Reset Time

## B.4 Remote Control Device

4.1.2.5 ASF_CONTROLDATA
6 SMBus Device Characteristics
6.3.1 Device Requirements
6.3.2 Usage of Firmware Remote Control Device Information
6.3.3 Remote Control Functions

## B.5 Firmware

3.1.5.2 System Firmware Error Events
3.1.5.3 System Firmware Progress Events
4 Firmware Interfaces
4.1 ACPI Definitions
4.1.1 Control Methods
4.1.2.1 ASF_INFO
4.1.2.2 ASF_ALRT
4.1.2.3 ASF_ALERTDATA
4.1.2.4 ASF_RCTL
4.1.2.5 ASF_CONTROLDATA
4.1.2.7
5.1.4.1 Start Watchdog Timer
5.1.4.2 Stop Watchdog Timer
5.1.5.1 Message with Retransmission
5.1.5.2 Message without Retransmission
5.2.1 Get Boot Options
5.2.1.1 Return Boot Options
5.2.1.2 No Boot Options
5.2.2 Boot Options Clear
5.3.1 Device Type Poll Message

## B.6 Operating System

3.1.5.4 OS Events
5.1.4.1 Start Watchdog Timer
5.1.4.2 Stop Watchdog Timer
3.2.4 RMCP Usage Scenarios

## B.7 Local Alert Configuration Software

3.1.1 PET Frame Behavior
3.1.2 Agent Address Field
3.1.3 Specific Trap Field
3.1.4 Variable Bindings Fields
3.1.5.5 System Heartbeat
3.1.5.6 System Boot Failure


Lenovo
Ex. 1037 - Page 77

3.2.4 RMCP Usage Scenarios
4.1.2.1 ASF_INFO
4.1.2.2 ASF_ALRT
4.1.2.3 ASF_ALERTDATA
4.1.2.4 ASF_RCTL
4.1.2.5 ASF_CONTROLDATA
4.1.2.7
5.1.4.1 Start Watchdog Timer
5.1.4.2 Stop Watchdog Timer
5.3.1 Device Type Poll Message

## B.8 Remote Console Software

3.1.1 PET Frame Behavior
3.1.2 Agent Address Field
3.1.3 Specific Trap Field
3.1.4 Variable Bindings Fields

RMCP Packet Format
3.2.3 ASF RMCP Message Types
3.2.4 RMCP Usage Scenarios


Lenovo
Ex. 1037 - Page 78

# Appendix C ASF Entity Function Checklists

This section contains the entity-specific checklists that define requirements and recommendations for an ASF implementation.

## C.1 Alert Sending Device

The following table identifies the required and optional features for an ASF alert-sending device. See also *C.2 Local Alert-Sending Device Configuration Software*.

Table D-1 Alert-Sending Device Checklist for ASF Implementations

| #### | Description | |
|---|---|---|
| AS1 | The device includes an SMBus 2.0-compliant master/slave controller, and external connection to a system's SMBus. | Required |
| AS2 | The device re-transmits PET frames, and meets the functionality described in section 3.1.1. | Required |
| AS3 | The device sets the *Agent Address* field of any transmitted PET's *Protocol Data Unit* per the RFC associated with the transport method, see section 3.1.2. | Required |
| AS4 | The device supports the IPv4 (IP version 4) protocol. | Required |
| AS5 | The device statically assigns the *Trap Source Type* field of issued PETs to identify the type of the source device, see section 3.1.4. | Required |
| AS6 | The device supports transmission of a system heartbeat message, see 3.1.5.5. | Optional |
| AS7 | The device includes a watchdog timer. | Required |
| AS8 | The device implements the functionality required to support a system boot-failure alert; see 3.1.5.6. | Required |
| AS9 | The device provides support for all ASF-RMCP message types and formats described in section 3.2 that have an IANA Enterprise Number value of 4542 (ASF). | Required |
| AS10 | The device provides support for RMCP Message Class values other than 6 (ASF). | Optional |
| AS11 | The device provides support for ASF-RMCP messages that have an IANA Enterprise Number value other than 4542 (ASF). | Optional |
| AS12 | The device responds to RMCP control messages (see 3.2.3.1 and 3.2.3.2) as configured by its OS-present configuration software. | Required |
| AS13 | If the device has not been configured, it does not respond to RMCP control messages (see 3.2.3.1 and 3.2.3.2). | Required |
| AS14 | If there are legacy sensors in the system (as described in the system's ACPI implementation, see *4.1.2.2 ASF_ALRT*), the alert-sending device periodically polls the devices to determine the devices' current status and sends any associated ASF alerts. Refer to 6.1.2 for additional information. | Required |
| AS15 | If there are legacy sensors in the system, the alert-sending device uses a 4-second *Minimum Legacy Device Poll Time*. | Required |
| AS16 | The device polls ASF sensors using the system-specified *Inter-poll Wait Time* (see 4.1.2.1), as stored by the device's configuration software in device-specific non-volatile memory. | Required |
| AS17 | If there are ASF sensors in the system, the alert-sending device issues periodic SMBus *Get Event Data* and/or *Get Event Status* messages to determine the devices' current status and sends any associated ASF alerts. | Required |
| AS18 | The device responds to the SMBus *Device Type Poll* message, see 5.3.1. | Required |
| AS19 | The device maintains its current link status, and reports this status in the *Device Type Poll* response. | Required |



Lenovo
Ex. 1037 - Page 79

| #### | Description | |
|---|---|---|
| AS20 | The device responds to the SMBus *Set System State* message (see 5.3.2) and returns the last value written in response to an RMCP System State Request (see 3.2.3.8). If no value is written by the system firmware, the device responds with an System State value of "Unknown". | Required |
| AS21 | The device responds to the SMBus *Start Watchdog Timer* and *Stop Watchdog Timer* messages, issuing the associated ASF alert if the timer is not reset within the required amount of time. | Required |
| AS22 | The device responds to the SMBus Boot Options messages (see 5.2). | Required |
| AS23 | The device responds to the SMBus Push messages (with and without retransmission) and transmits the requested ASF alerts. | Required |
| AS24 | A system board-set device (e.g. soldered onto the motherboard) has an assignable SMBus device address. | Optional |
| AS25 | A device on a card that plugs into an expansion bus has an assignable SMBus device address. | Required |
| AS26 | The device supports AS12, AS15, and AS18 features for all system states from which the device is configurable to accept packets to wake the system. | Required |

## C.2 Local Alert-Sending Device Configuration Software

The following table identifies the required and optional features for the OS-present configuration software provided with an alert-sending device:

Table D-2 Local Alert Configuration Software Checklist for ASF Implementations

| #### | Description | |
|---|---|---|
| CS1 | The configuration software programs non-volatile memory for the alert-sending device with the *Minimum Watchdog Reset Value*, *Minimum ASF Sensor Inter-poll Wait Time*, *Manufacturer ID*, and *System ID* values present in the system firmware's ACPI implementation (see *4.1.2.1 ASF_INFO*). | Required |
| CS2 | The configuration software programs non-volatile memory for the alert-sending device with the managed client's UUID, as found in the system firmware's SMBIOS *System Information* structure. | Required |
| CS3 | If the alert-sending device supports system heartbeat messages, the device's configuration software provides a user-settable rate at which the messages are transmitted and a method through which to disable the messages entirely. | Required |
| CS4 | If the managed client supports legacy-device alerts (as described in the system's ACPI implementation, see *4.1.2.2 ASF_ALRT*) the alert-sending device's configuration software enables the device to send PET alerts based on the legacy-device status. Refer to 4.1.2.2 and 6.1.2 for additional information. | Required |
| CS5 | The configuration software, when running on an ACPI-aware operating system, sets its alert-sending device's power-on wait time (via the ACPI SPWT control method) to the maximum of the device's fixed time and the value returned by the GPWT ACPI control method. | Required |
| CS6 | If the managed client supports RMCP control messages (as described in the system's ACPI implementation, see *4.1.2.4 ASF_RCTL* and *4.1.2.6 ASF_RMCP*) the alert-sending device's configuration software records the system-specific information into the device's non-volatile memory to enable the device to respond to the messages. Refer to 3.2.3.1 and 3.2.3.2 for additional information. | Required |
| CS7 | The configuration software records the device's TCP/IP address into its non-volatile memory. | Required |
| CS8 | The configuration software gathers the TCP/IP address of the management console to which alerts are sent, and records this address into the device's non-volatile memory. | Required |



Lenovo
Ex. 1037 - Page 80

## C.3 Legacy Sensor

The following table identifies the required and optional features for an ASF legacy sensor.

Table D-3 Legacy Sensor Checklist for ASF Implementations

| #### | Description | |
|---|---|---|
| LS1 | The device's alerts are pollable via an SMBus Byte Read command. | Required |
| LS2 | Individual status bits in the Read Result value returned by an SMBus Byte Read identify the device's alerts. | Required |
| LS3 | All status bits returned by the device that are set to 1b within the Alert Data Mask published by the system firmware must always be valid. See 6.1.1 for more information. | Required |
| LS4 | The alert status bits must be either level or automatically cleared after an SMBus Byte Read, but set again before the next Byte Read if the event is still active. See 6.1.1 for more information. | Required |
| LS5 | The device responds to its address within 4 seconds (the *Minimum Legacy Sensor Poll* Time). | Required |

## C.4 ASF Sensor

The following table identifies the required and optional features for an ASF sensor.

Table D-4 ASF Sensor Checklist for ASF Implementations

| #### | Description | |
|---|---|---|
| SD1 | The device is compliant with [SMBUS_2.0]. | Required |
| SD2 | The device, present on an expansion-bus card, supports an assignable SMBus address. | Required |
| SD2 | The device, present on the system board-set (e.g. soldered onto the motherboard), supports an assignable SMBus address. | Optional |
| SD3 | The device supports the SMBus *Device Type Poll* message (see 5.3.1), responding with ASF Function Bits set to 02h to indicate that it is an ASF sensor device. | Required |
| SD4 | The device supports the SMBus *Get Event Data* and *Get Event Status* messages (see 5.1.1). | Required |
| SD5 | The device's SMBus 2.0 UDID identifies the device as supporting ASF methods by setting bit 5 of the UDID Interface field to a 1. | Required |
| SD6 | The sensor contains an active-high (logic level 1), level-sensitive status register for each event reported by the sensor. | Required |
| SD7 | The sensor completes its power-on reset (POR) in 500 milliseconds from detection of stable supply power. | Required |
| SD8 | The device supports SMBus PEC protocols for ASF-defined messages. | Required |

## C.5 Remote Control Device

The following table identifies the required and optional features for a system's remote-control devices, i.e. the SMBus devices accessed by the alert-sending device to cause the system to power cycle, reboot, power on, or power off.

Table D-5 Remote Control Device Checklist for ASF Implementations

| #### | Description | |
|---|---|---|
| RD1 | The device supports the SMBus Byte Write transaction to set the remote-control action. | Required |
| RD2 | The remote-control action is initiated immediately after the alert-sending device sends the associated Byte Write SMBus message. | Required |
| RD3 | The device supports its associated remote-control action as described in section 6.3.3. | Required |



Lenovo
Ex. 1037 - Page 81

| #### | Description | |
|---|---|---|
| RD4 | The device supports SMBus PEC protocols. | Optional |

## C.6 System Firmware

The following table identifies the required and optional features for a managed client's firmware ASF implementation.

Table D-6 System Firmware Checklist for ASF Implementations

| #### | Description | |
|---|---|---|
| SF1 | System includes an SMBIOS implementation, compliant with v2.3 or later of [SMBIOS]. | Required |
| SF2 | System includes an ACPI implementation, compliant with v1.0b or later of [ACPI] | Required |
| SF3 | The system's ACPI implementation contains a single ASF device with PnP ID of "ASF0001" and provides support for the GPWT and SPWT control methods. | Required |
| SF4 | The system's ACPI implementation includes the ASF_INFO information record in its ASF! ACPI description table. | Required |
| SF5 | If the system includes legacy alert-source devices, and those devices' alerts are to be handled by an ASF-aware alerting device, the ACPI ASF! description table includes an ASF_ALRT information record. | Required |
| SF6 | If the system includes devices that provide ASF RMCP system actions to an ASF-aware alerting device, the system's ACPI ASF! description table includes an ASF_RCTL information record. | Required |
| SF7 | If the system includes SMBus devices that are not discoverable, the system's ACPI ASF! description table includes an ASF_ADDR information record. | Required |
| SF8 | If feature SF6 is implemented, at most one (1) of these information records is present, and that structure can specify at most eight (8) device alerts. | Required |
| SF9 | The system's SMBIOS implementation contains a *System Information* structure that provides the system's UUID/GUID. | Required |
| SF10 | If the system supports an OS boot failure alert, the system's ACPI implementation includes a Metolious [MTLS] "OS Boot Failure" System Hang Watchdog device and its associated control methods. | Required |
| SF11 | If the system supports ASF RMCP capabilities, the system's ACPI ASF! description table contains an ASF_RMCP information record. | Required |
| SF20 | The system firmware implements one or more *System Firmware Error Events*. | Optional |
| SF21 | The system firmware implements one or more *System Firmware Progress* Events. | Optional |
| SF22 | The system firmware issues the SMBus *Stop Watchdog Timer* message within *Minimum Watchdog Timer Reset Value* seconds to disable the initial boot-failure watchdog timer in the alert-sending device. | Required |
| SF23 | If the system supports ASF RMCP capabilities, the system firmware issues the SMBus *Get Boot Options* message as early as possible in its boot process to retrieve the boot options sent with the last received RMCP command, and subsequently issues the SMBus *Clear Boot Options* message to signify that the firmware has retrieved the options for the current boot. Boot Options information retrieved from the *Get Boot Options* message is reported by the firmware in the system's ACPI ASF_RMCP structure. | Required |
| SF24 | The system firmware locates the alert-sending devices in the system by issuing the SMBus *Device Type Poll Message* and examining the results of that message. | Required |
| SF25 | The system firmware issues the SMBus *Set System State Message* on system sleeping-state transitions. | Optional |



Lenovo
Ex. 1037 - Page 82

| #### | Description | |
|---|---|---|
| SF51 | The system identifies all fixed-address SMBus devices that are undiscoverable, including legacy devices, using a *Fixed SMBus Addresses (SEEPROM Record Type* 06h) record in an SMBus SEEPROM. | Optional |
| SF52 | The system identifies all fixed-address SMBus devices, even those that are discoverable. | Optional |
| SF53 | If the system includes legacy alert-source devices, and those devices' alerts are to be handled by an ASF-aware alerting device, the system identifies the legacy-device alert capabilities using an *ASF Legacy-Device Alerts (SEEPROM Record Type* 07h) record in an SMBus SEEPROM. | Optional |
| SF55 | If the system includes devices that provide ASF RMCP system actions to an ASF-aware alerting device, the system identifies the access methods using an *ASF Remote Control (SEEPROM Record Type 08h)* record in an SMBus SEEPROM. | Optional |

## C.7 Management Console Software



Lenovo
Ex. 1037 - Page 83