UNITED STATES PATENT AND TRADEMARK OFFICE

BEFORE THE PATENT TRIAL AND APPEAL BOARD

US CONEC LTD.,
Petitioner

v.

SENKO ADVANCED COMPONENTS, INC.,
Patent Owner

Case IPR2024-00115
U.S. Patent No. 11,307,369

DECLARATION OF JAMES F. BRENNAN III, PH.D.
IN SUPPORT OF PETITION FOR *INTER PARTES* REVIEW OF CLAIMS 1-22 OF U.S. PATENT 11,307,369

TABLE OF CONTENTS

I. INTRODUCTION 1
A. Scope of Engagement 1
B. Compensation 2
C. Professional Qualifications, Education and Experience 2
D. Publications and Patents 5
E. Materials Considered 6
II. LEGAL STANDARDS FOR INVALIDITY 6
A. Anticipation 8
B. Obviousness 10
C. Miscellaneous 12
III. LEVEL OF ORDINARY SKILL IN THE ART 13
IV. BACKGROUND OF THE TECHNOLOGY 15
A. Data Centers 15
B. Optical Fiber Connector Technology 19
V. U.S. PATENT NO. 11,307,369 23
A. Background 23
B. Discussion of Certain Embodiments 25
C. Summary of Relevant Prosecution History 30
D. Claims of the ’369 Patent 34
VI. CLAIM INTERPRETATION 45
VII. PRIOR ART 46
A. Overview of Scherer 46
B. Overview of Lee 50
C. Overview of Gniadek 56
VIII. SUMMARY OF GROUNDS 60
IX. GROUND 1: SCHERER IN VIEW OF LEE RENDERS OBVIOUS CLAIMS 1-17, 20, AND 21 61
A. Motivation to Combine 62

B. Claim 1 75
C. Claim 2 103
D. Claim 3 105
E. Claim 4 109
F. Claim 5 112
G. Claim 6 114
H. Claim 7 116
I. Claim 8 118
J. Claim 9 120
K. Claim 10 122
L. Claim 14 124
M. Claim 11 133
N. Claim 12 138
O. Claim 13 142
P. Claim 15 148
Q. Claim 16 149
R. Claim 17 150
S. Claim 20 150
T. Claim 21 156
X. GROUND 2: SCHERER IN VIEW OF LEE AND FURTHER IN VIEW OF GNIADEK RENDERS OBVIOUS CLAIMS 18, 19, AND 22 163
A. Motivation to Combine 163
B. Claim 18 166
C. Claim 19 170
D. Claim 22 171
XI. GROUND 3: LEE ANTICIPATES CLAIMS 1-17, 20-21 175
A. Claim 1 175
B. Claim 2 208
C. Claim 3 210

D. Claim 4 212
E. Claim 5 214
F. Claim 6 215
G. Claim 7 218
H. Claim 8 220
I. Claim 9 223
J. Claim 10 225
K. Claim 14 228
L. Claim 11 231
M. Claim 12 233
N. Claim 13 235
O. Claim 15 237
P. Claim 16 238
Q. Claim 17 239
R. Claim 20 239
S. Claim 21 240
XII. GROUND 4: LEE RENDERS OBVIOUS CLAIM 18, 19, 21 AND 22....243
A. Claim 18 244
B. Claim 19 246
C. Claim 21 247
D. Claim 22 248
XIII. CONCLUSION 249

TABLE OF MATERIALS CONSIDERED

Exhibit No.	Description
1001	U.S. Patent No. 11,307,369 to Takano et al. ("'369 Patent")
1002	Patent Prosecution History of U.S. Patent No. 11,307,369 to Takano et al.
1003	International Application No. WO 2015/027033 to Scherer et al. ("Scherer")
1004	International Publication No. WO 2017/127208 to Lee ("Lee")
1005	U.S. Patent Application Publication No. 2017/0227720 to Lin ("Lin") (Relevant to Declaration 2)
1006	*Curriculum Vitae* of James F. Brennan III, Ph.D.
1007	Exhibit I of Complaint – Claim Chart U.S. Patent No. 11,307,369 and MMC, *Senko Advanced Components, Inc. v. US Conec, Ltd.*, No. 1:23-cv-00083 (D. Del. Jan. 24, 2023), ECF No. 1-1
1008	Childers, Darrell, *et al.*, "Multi-Fiber, MT Ferrule Endface Fiber Tip Displacement Model for Physical Contact Interconnects," White Paper (2006)
1009	U.S. Patent Application Publication No. 2016/0238796 to Nguyen et al. ("Nguyen") (Relevant to Declaration 2)
1010	U.S. Patent No. 8,465,317
1012	Declaration of James F. Brennan III, Ph.D. (IPR2024-00116)
1013	Wenke, I.G., "Report on Fiber Optic Cables," *HSB Technical Report* (2015)
1014	Kant, K., "Data Center Evolution: A Tutorial on State of the Art, Issues, and Challenges," *Computer Networks*, 53:2939-65 (2009)
1015	Curran, M. & Shirk, B., "Basics of Fiber Optics", accessed at https://www.fibersystems.com/pdf/whitepapers/Basics-of-Fiber-Optics.pdf (May 2016)
1016	"19-Inch Rack," *Lite-On*, accessed at https://liteon-cips.com/products/racks/19-inch-rack/

Exhibit No.	Description
1017	"Fiber Optic Rack Mount Enclosure, 3-Panel 1 RMS," *Computer Cable Store*, accessed at https://www.computercablestore.com/fiber-optic-rack-mount-enclosure-3-panel-1-rms
1018	"Fiber Optic Connector Tutorial," *Fibermart*, accessed at https://www.fiber-mart.com/news/fiber-optic-connector-tutorial-a-848.html
1019	U.S. Patent No. 5,615,293 to Sayegh ("Sayegh")
1020	Complaint, Senko Advanvced Components, Inc. v. US Conec Ltd., Case No. 1:23-cv-00083 (D. Del.)

I, James F. Brennan III, Ph.D., hereby declare:

I. INTRODUCTION

A. Scope of Engagement

1. I have been retained as an expert witness by counsel for Petitioner US Conec Ltd. ("Petitioner") in connection with the above-captioned *Inter Partes* Review ("IPR") proceeding.

2. I submit this Declaration in the above-captioned proceeding to provide my expert opinion in support of Petitioner's Petition for *Inter Partes* Review of U.S. Patent No. 11,307,369 (the "'369 Patent," EX1001). This is my first of two Declarations against the '369 Patent, where my first declaration covers the alleged invention of claims 1-22 and my second declaration covers the alleged invention of claims 23-40. I submit two declarations as I believe the Patent Owner or Office will consider the claims scope of claims 1-22 and 23-40 to be different requiring different prior art either in anticipation or obviousness of the claims.

3. The opinions to which I will testify, if asked, are set forth in this Declaration. My opinions in this Declaration are based upon the information that I have received to date. They may be supplemented or modified if additional information is received. They may also be supplemented to rely on additional information or opinions provided by the parties (or witnesses retained by the parties) and issues that may arise.

B. Compensation

4. Exponent charges a rate of $650 per hour for my time spent working on this IPR in 2023 and a rate of $750 per hour for my time spent working on this IPR in 2024. My compensation is not in any way dependent on the statements I set forth herein or the outcome of this proceeding.

C. Professional Qualifications, Education and Experience

5. I am a Principal in Exponent's Electrical Engineering and Computer Science practice where I have consulted on numerous projects, many relating to opto-mechanical device development, implementation, and function. I have worked for Exponent since January 2012. Throughout my career, I have built and utilized hundreds of electrical, electromechanical, laser, optical, and LED systems for myriad applications.

6. I hold an S.B. in electrical engineering and an S.M. in electrical engineering and computer science from the Massachusetts Institute of Technology, granted in 1987 and 1989, respectively. I also hold an Electrical Engineer degree from the Massachusetts Institute of Technology, which was granted in 1991. Throughout my graduate studies, I taught courses concerning electromagnetic field and wave theory and applications, including optical systems.

7. In 1995, I was granted a Ph.D. in physics and electrical engineering from the Massachusetts Institute of Technology. During research for my Ph.D., I

designed and built electro-optical instrumentation to diagnose and treat human pathologies, including various cancers and arterial diseases. During this work, I built several investigational medical devices that utilized optical catheters, the majority of which involved the use of optical fibers to deliver light to and collect light from locations within the body. I designed and manufactured custom optical fiber connectors, which often held several optical fibers, to interface these optical catheters with various diagnostic and therapeutic equipment. These systems were used at several locations such as the Cleveland Clinic Foundation, Leonard Morse Hospital, Massachusetts General Hospital, Leiden Hospital in Leiden, The Netherlands, and Erasmus University Medical Center in Rotterdam, The Netherlands.

8. I was a Senior Research Specialist at 3M Company's Telecommunications Systems Division where I developed passive optical components that addressed the telecommunications and sensor industries, which became the cornerstone of the 3M Optical Components business unit. I invented a direct-write laser machining technology for producing fiber gratings of arbitrary reflectivity profiles and lengths and utilized the method to make chromatic dispersion compensators for use in long-haul optical communications systems. I led teams that developed and sold products throughout the world, such as specialty optical fibers, pump stabilizers, dispersion compensators, optical connectors,

junction boxes, and Bragg gratings. Many of these components were tested extensively on our optical communications testbed, which I built and maintained. I was on the team that transferred the manufacturing of many of these devices to Singapore facilities.

9. I was Vice President of Research and Development at Raydiance, Inc., where I staffed and led the entire development team and designed and built high-power fiber laser systems capable of producing ultrashort pulses at ablation-level energies for use in laser machining and surgery. This work resulted in several recognitions and awards for the product and the corporation, including the Red Herring 100 North America Award and recognition as a finalist in the "Most Innovative Company" category in the 2008 American Business Awards. These laser systems utilized highly specialized optical fibers and optical fiber amplifiers that required innovative optical connections between the various optical fiber components.

10. I previously served as the Chief Science Officer at Prescient Medical, Inc., where I led the development of an optical catheter system for the diagnosis of coronary artery disease by utilizing Raman spectroscopy, which incorporated laser light sources. Commercial multi-fiber connectors (MTP/MPO) were adapted to interface these optical catheters with custom spectroscopic equipment.

11. I have been an active researcher with more than 75 journal and conference papers and 5 book chapters published. I have been granted 34 United States patents, with others pending. At various times in my career, I have been a member of the Optical Society of America ("OSA"), the International Society for Optics and Photonics, and the Institute for Electrical and Electronics Engineers ("IEEE"). I was a committee member for OSA's 2007 conference on optical fiber communications and also a committee member for OSA's Bragg Gratings, Photosensitivity, and Poling topical conference for 1999, 2001, and 2003. I have been a regular reviewer for IEEE Photonics Technology Letters, as well as several other journals.

12. I am on the American National Standards Institute's ("ANSI") subcommittee for ANSI Z136.3 "Safe Use of Lasers in Health Care," ANSI Z136.9, "Safe Use of Lasers in Manufacturing Environments," and ANSI Technical Subcommittee 1 (TSC1), "Biological Effects and Medical Surveillance of the Accredited Standards Committee (ASC Z136) on Laser Safety."

13. My *curriculum vitae* is filed herewith as EX1006.

D. Publications and Patents

14. A comprehensive list of publications and patents is included in my *curriculum vitae* filed herewith as EX1006.

E. Materials Considered

15. For purposes of this Declaration, I have reviewed and, where applicable, relied upon the information and/or teachings of the documents identified in the "Table of Materials Considered" above. I have used the same exhibit numbers for the same documents and the same full list of exhibits for the Table of Materials Considered in both my first and second Declaration regardless of whether the exhibit is required for both proceedings for consistency and ease of use of my first and second Declarations by the Office.

16. I also base my opinions on my education and professional experience in the field of electrical engineering and electro-optics.

17. I confirm that to the best of my knowledge the accompanying exhibits are true and accurate copies of what they purport to be, and that an expert in the field would reasonably rely on them to formulate opinions such as those set forth in this Declaration.

II. LEGAL STANDARDS FOR INVALIDITY

18. I understand that in *inter partes* review proceedings, a patent claim is construed using the same standard that would be used in a civil action, and that a claim should be construed in accordance with the ordinary and customary meaning of the claim as it would be understood by a person of ordinary skill in the art ("POSITA").

19. While I am neither a patent lawyer nor an expert in patent law, I have been informed of the applicable legal standards for anticipation and obviousness. I have relied upon these legal principles, as explained to me by counsel, in forming my opinions set forth in this Declaration.

20. I understand that a patent may be deemed invalid based on anticipation or obviousness over the prior art. I understand that to anticipate a claim under 35 U.S.C. § 102, a prior art reference must disclose each and every element of the claim.

21. It is my understanding that a patent can be found invalid for several reasons. It is my understanding that these reasons include, among others: (i) being anticipated by the prior art; or (ii) being obvious in view of the prior art. My understanding of each of these bases for invalidity is discussed in greater detail below.

22. In addition, I understand that objective evidence of non-obviousness such as (i) commercial success, (ii) long-felt but unresolved need, (iii) failure of others, (iv) skepticism by experts, and (v) unexpected results should also be considered in determining whether a claim would have been obvious, if relevant.

23. I understand that in undertaking an invalidity analysis, the claims are to be interpreted from the perspective of a POSITA.

A. Anticipation

24. I understand that one way to show that a patent claim is invalid is to show that the claim is anticipated by a prior art reference. I understand this to mean that the patent claim is not new or novel in view of the prior art.

25. I further understand that to determine whether a prior art reference anticipates a patent claim requires a comparison of the claim language to the prior art on a limitation-by-limitation basis. I have been informed that a prior art reference "anticipates" under 35 U.S.C. § 102 and renders a patent claim invalid if all of the claim's limitations are expressly or inherently disclosed in that single prior art reference. The disclosure in the prior art reference does not have to use the same words as the claim, but all of the requirements of the claim must be expressly or inherently present.

26. I have been informed of the scope of prior art that can be used in an anticipation analysis as set forth in 35 U.S.C. § 102. In particular, I understand that a patent or publication generally qualifies as prior art to an asserted patent claim if it was published prior to the invention of the asserted patent claim or more than one year before the filing date of the application of the asserted patent. I further have been informed that a patent issued on a patent application filed before the invention of the asserted patent claim also is generally prior art to the asserted

patent claim. I am aware some exceptions may apply based on, *e.g.*, the same inventors of the asserted patent being the inventors of a prior art reference.

27. I understand that a prior art reference anticipates a patent claim when the claim limitations not expressly found in that reference are nonetheless inherent in it. I understand that express disclosure means that the subject matter is clearly described in the prior art reference.

28. I understand that when a limitation is inherent in the prior art reference, that limitation is not clearly described in the prior art reference but is a natural result flowing from the explicit disclosure of the prior art. I understand that for a claimed element to be inherently present within a prior art document, it must be necessarily present. That is, the prior art reference must necessarily function in accordance with or include the claimed element. I understand that inherency may not be established by probabilities or possibilities—the mere fact that a certain thing may result from a given set of circumstances is not sufficient.

29. I understand that in some cases, the inherent property corresponds to a claimed new benefit or characteristic of a purported invention otherwise in the prior art. I further understand that when a prior art method is at issue, the inherent anticipation examines the natural and inherent results in that method without regard to the full recognition of those benefits or characteristics within the art field at the time of the prior art disclosure.

B. Obviousness

30. I have been informed that a patent claim is invalid as being obvious in view of the prior art if the differences between the patented subject matter and the prior art are such that the subject matter as a whole would have been obvious at the time of the invention to a person having ordinary skill in the art. *See* 35 U.S.C. § 103. In making a determination of obviousness, I understand that the following factors are analyzed: (i) the scope and content of the prior art; (ii) the differences, if any, between the prior art and the claims at issue; (iii) the level of ordinary skill in the pertinent art; and (iv) objective evidence of non-obviousness, if any exists.

31. I have been informed that any of the following rationales are some of the acceptable bases for the conclusion that a claim is obvious: (i) the claimed invention is simply a combination of prior art elements according to known methods to yield predictable results; (ii) the claimed invention is a simple substitution of one known element for another to obtain predictable results; (iii) the claimed invention uses known techniques to improve similar devices (methods, or products) in the same way; (iv) the claimed invention was "obvious to try" because it was a choice from a finite number of identified, predictable solutions, with a reasonable expectation of success; (v) there is known work in one field of endeavor that may prompt variations of it for use in either the same field or a different one based on design incentives or other market forces, if the variations would have

been predictable to a POSITA; or (vi) there is some teaching, suggestion, or motivation in the prior art that would have led a POSITA to modify the prior art references or to combine prior art reference teachings to arrive at the claimed invention.

32. I have been informed that in order for a patent claim to be considered obvious, at the time the invention was made, each and every limitation of the claim must be present within the prior art, or within the prior art in combination with the general knowledge held by a POSITA, and that such a person would have a reasonable expectation of success in combining these teachings to achieve the claimed invention. I also understand that the reason to select and combine features, the predictability of the results of doing so, and a reasonable expectation of success of doing so may be found in the teachings of the prior art themselves, in the nature of any need or problem in the field that was addressed by the patent, in the knowledge of a POSITA in the field at the time, as well as in common sense or the level of creativity exhibited by a POSITA. There need not be an express or explicit suggestion to combine references.

33. I understand that substituting one known element for another known element would have been obvious when it leads to reasonably predictable results.

34. I understand that a combination of elements would have been obvious when a POSITA has a good reason to pursue the combination, which is among a

finite number of known options within his or her technical grasp, and leads to reasonably expected results.

35. A prior art reference can be said to teach away when a POSITA would be discouraged from following the path set out in the reference or would be led in a direction divergent from the path that was taken in the claimed invention. The mere disclosure of more than one alternative does not constitute a teaching away from alternatives that are not disclosed when the prior art does not criticize, discredit, or otherwise discourage the solution claimed in the alleged invention. Similarly, a prior art reference that merely expresses a general preference for an alternative invention does not teach away.

36. I have relied upon this understanding of the applicable legal standards in reaching my opinion set forth in this Declaration.

C. Miscellaneous

37. I understand that Petitioner has the burden of proving unpatentability by a preponderance of evidence, which means that the claims are more likely than not to be unpatentable.

38. I also understand that the claims are to be construed according to the same claim construction standard that district courts use wherein claim terms are given their ordinary and customary meaning from the perspective of a POSITA at the time of the invention.

39. The analysis in this Declaration is in accordance with the above-stated legal principles.

III. LEVEL OF ORDINARY SKILL IN THE ART

40. I understand that the level of ordinary skill may be reflected by the prior art of record and that a POSITA to which the claimed subject matter pertains would have the capability of understanding the scientific and engineering principles applicable to the pertinent art.

41. I understand that there are multiple factors relevant to determining the level of ordinary skill in the pertinent art, including (1) the levels of education and experience of persons working in the field at the time of the invention; (2) the sophistication of the technology; (3) the types of problems encountered in the field; and (4) the prior art solutions to those problems.

42. I am very familiar with the knowledge and capabilities that a POSITA would have possessed in the subject area in fiber optics. Specifically, my education and experience in the industry and with engineers practicing in the industry during the relevant time period allowed me to become personally familiar with the knowledge and capabilities of a person of ordinary skill in the area of fiber optics. Unless otherwise stated, my testimony below refers to the knowledge of a POSITA in the field of fiber optics at the time of the priority date of the ’369 Patent, which I understand is July 14, 2017.

43. In my opinion, a POSITA of the ’369 Patent at the time of its earliest claimed priority date would have been a person having: (1) at least a bachelor’s degree in mechanical engineering, electrical engineering, physics, or a related field and three years of experience in fiber optics and fiber optic connectors; (2) a master’s degree in mechanical engineering, electrical engineering, physics, or a related field and at least one year of experience in fiber optics and fiber optic connectors; or (3) industry experience (at least five years) designing fiber optic connectors in lieu of a formal degree.

44. I believe such a POSITA would have been capable of understanding the ’369 Patent and the prior art references discussed herein. This level of skill in the art would apply at the earliest priority date of the ’369 Patent, which I understand is July 14, 2017.

45. Based upon my education, training, and professional experience in the field of the claimed invention, I am familiar with the level and abilities of a POSITA at the time of the claimed invention. Additionally, although my qualifications exceed those of the hypothetical POSITA defined above, my analysis and opinions regarding the ’369 Patent have been rendered from the perspective of a POSITA at the time of the invention.

46. My analysis is intended to reflect how a POSITA would have understood the ’369 Patent claims as of the priority date, even if I use the present tense.

IV. BACKGROUND OF THE TECHNOLOGY

47. My discussion of the background of the technology is intended to provide some context for my later analysis of the ’369 Patent and prior art. This discussion provides a high-level overview of the components, but it is not intended to reflect the meaning of any particular claim term in a patent, which must be assessed in view of the specification and the context of the claim language. Rather, this is a general overview of fiber optic cables, connectors, adapters, and other components. The technology at issue generally relates to fiber optic connectors of the type commonly used in data centers. Optical fiber has been used for a variety of applications, including but not limited to, broadband voice, video, and data transmission.

A. Data Centers

48. Public and private fiber optic networks used for, *e.g.*, voice, video, and data transmissions often include fiber optic equipment located in data distribution centers or central offices. The ’369 Patent generally relates to details of the optical fiber connectors, which are used to connect optical fibers to equipment or other optical fibers, thus creating an optical fiber interconnection.

49. A data center is a facility that houses data storage and/or communication equipment used to provide a variety of services, including, for example, digitally housing Internet sites. *See* EX1014, 2939.

Organization of an example data center. *See* EX1014, 2940.

50. Data centers use "racks" to mount electrical and optical fiber interconnection equipment, a row of which is shown above. *See* EX1014, 2940. A rack is an open structure for mounting electrical or electronic equipment, including servers, switches and storage "bricks." Equipment is typically fastened to racks via mounting holes on the sides of the rack. The figure below shows a typical rack that may be found in a data center.

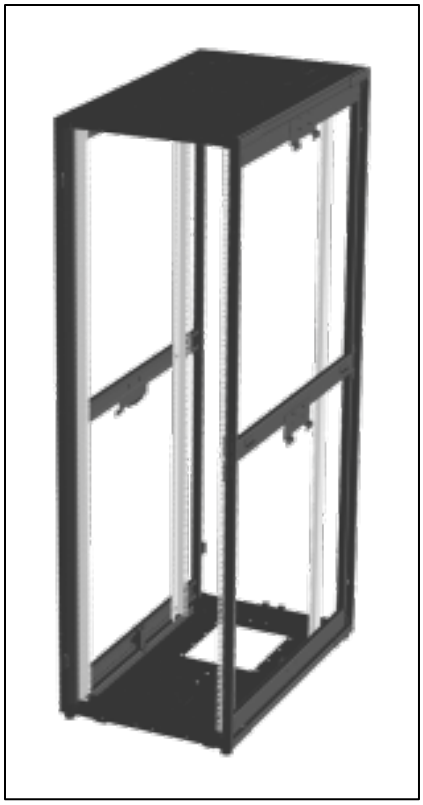

Example of a generic 19” rack that may be used in a data center. EX1016.

51. A rack unit or a “U” is a measurement of vertical space within a rack. *See* EX1014, 2940. For example, a base rack unit (*i.e.*, the height measurement) is 44.45 millimeters (1.75”), and a standard rack can take 42 1U modules.

52. Enclosures, chassis, or frames that are mounted to a rack in a data center can aid in further compartmentalization of racks and can be configured to house equipment for connecting fiber optic cables. An example of an enclosure used to house equipment for connecting fiber optic cables is shown below.

Example of an enclosure to house equipment for connecting fiber optic cables.

EX1017.

53. Maximizing use of physical space is important for optimizing costs of operating and maintaining data center infrastructure.The fiber optic equipment typically included in housings that are mounted in equipment racks generally seek to provide a greater density of interconnections to optimize use of space. When additional bandwidth is needed or desired, additional fiber optic equipment may be utilized in the data center to increase optical fiber port count, requiring more equipment rack space in a data center. Therefore, there is generally a desire to decrease the size (cross-sectional area) of the components that facilitate fiber optic connections. Certain types of optical connectors can aid in facilitating signal transmission while reducing physical space consumption.

B. Optical Fiber Connector Technology

54. In general terms, a fiber optic cable and assembly contain one or more optical fibers that are used to guide light signals through a silica glass fiber that is typically coupled to a transmitter on one end that converts electrical information into optical signals and a receiver on the other end that converts optical information into electrical information. The fiber itself is composed of a core that transmits light, a cladding, the next adjacent layer that confines the light within the core, and additional non-optical layers. The figure below shows an example of a common fiber core and cladding ratio, with and without a protective buffer used in optical communications.

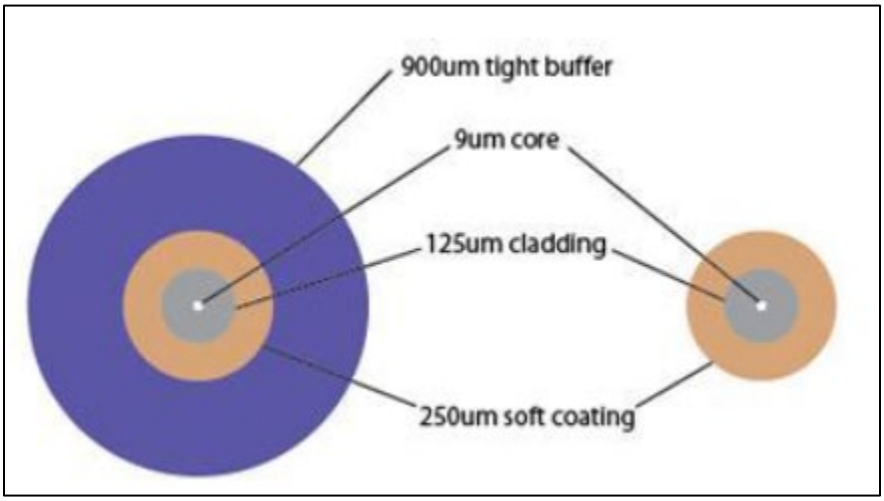

Examples of common fiber cores and cladding diameters coated or uncoated. *See* EX1013, 5.

55. Optical fibers and connectors themselves are generally small and compact. Additionally, fiber optic cables can include a varying number of optical fibers. Fiber optic connectors and adapters can be used to facilitate the connection of two optical fibers. While there are several methods of connecting fiber optic cables, physical contact connectors are most relevant to the ’369 Patent. Physical contact connectors employ a ferrule surrounding an embedded optical fiber. By physically pressing two ferrules together, an optical connection between two optical fibers can be created. A component, oftentimes a spring, is utilized to provide axial compliance when ferrules are pressed together and to ensure contact is maintained during use. *See* EX1015, 8. Fiber optic connectors and adapters can be a fast, efficient, and low-cost way to connect fiber optic cables, allowing for demountable connections. There are numerous options for fiber connectors, with variability in orientation, size, and mechanical components that engage the connection. *See* EX1015, 9.

56. In the context of this matter, fiber optic adapters (sockets) receive and mate those fiber optic connectors to support one or more fiber optic connections. Fiber optic adapters may come in different shapes, but they are all typically designed to achieve the same function—to join and align the connectors of two fiber optic cables. The two fiber optic cables may have one or more fiber ferrule(s) to house all the fibers in each cable, and thus connecting the two fiber optic cables

is accomplished by mating the respective ferrules. A fiber optic adapter allows fiber optic cables to be attached to each other through different interfaces, allowing many devices to communicate at once.

57. Fiber optic connectors and adapters come in different standard forms and can be used to support connections of different numbers of optical fibers. For example, LC connectors terminate one or more optical fibers each in individual ferrules whereas MPO (Multi-Fiber Push-On/Pull-Off) connectors can terminate a greater number of fibers in a single ferrule. EX1015, 9. Both LC and MPO connectors are described in various recognized industry standards (*e.g.*, IEC 61754-20 Fibre Optic Connector Interfaces – Part 20: Type LC Connector Family and IEC-61754-7, Fiber Optic Connector Interfaces – Part 7: Type MPO connector family). MTP® is a type of MPO connector developed by US Conec (Petitioner). Fiber optic adapters can also be designed to connect a plurality of discrete fiber optic adapters, or one or more multi-fiber connectors. The figure below shows some common connector types.

Common Connector Type	Diagram	Ferrule Size
FC - Ferrule Connector		2.5 mm
LC - Lucent Connector	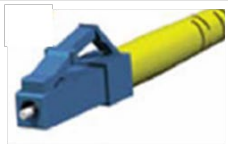	1.25 mm
SC - Subscriber Connector		2.5 mm
ST – Straight Tip Connector		2.5 mm
MPO – Multi-Position Optical (also called MTP)		-

Common fiber optic connectors. *See* EX1015, 9; *see also* EX1018.

58. The key aspect to a fiber connection is the precise alignment of each fiber core for proper light coupling. The fiber core itself is extremely small in diameter, often as small as or smaller than 10 μm. A fiber connector needs to provide precise alignment of the fiber cores to ensure proper signal coupling.

59. Alignment is often achieved using a "butt-joint alignment" mechanism in which the ferrule both secures and aligns the fiber. Inside each fiber optic adapter is typically an alignment sleeve that serves to bring together the

mating single-fiber ferrules of the two connectors, as shown in the figure below. Additionally, as mentioned previously, oftentimes springs are utilized to provide axial compliance when ferrules are pressed together and to apply a compressive force for ensuring contact is maintained during use.

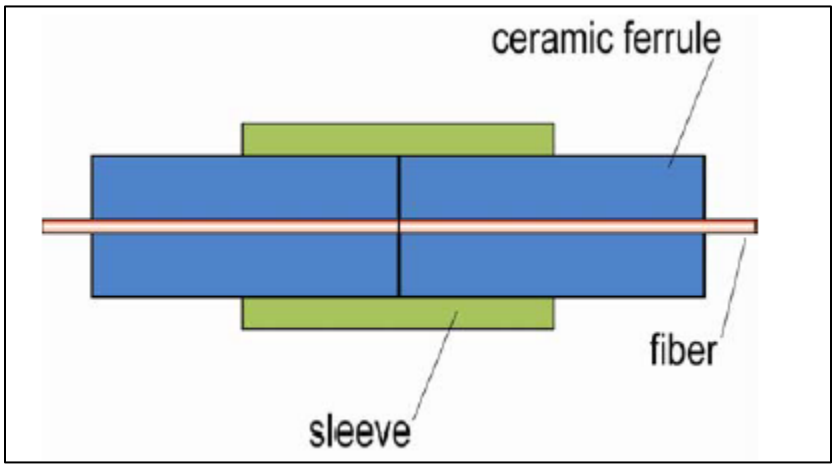

Physical connection between two joined fibers. *See* EX1015, 8.

V. U.S. PATENT NO. 11,307,369

A. Background

60. U.S. Patent No. 11,307,369 (EX1001) (the "'369 Patent"), entitled "Ultra-Small Form Factor Optical Connectors Used As Parts Of A Reconfigurable Outer Housing," issued on April 19, 2022, was filed as U.S. Patent Application Serial No. 17/370,057 (the "'057 Application") on July 8, 2021. The '369 Patent is a continuation of U.S. Patent Application Serial No. 17/327,197, filed on May 21, 2021 (now U.S. Patent No. 11,340,413); which is a continuation of U.S. Patent Application Serial No. 17/090,855, filed on November 5, 2020 (now U.S. Patent No. 11,487,067); which is a continuation of U.S. Patent Application Serial No.

16/414,546, filed on May 16, 2019 (now U.S. Patent No. 10,859,778); which is a continuation of U.S. Patent Application Serial No. 16/388,053, filed on April 18, 2019 (now U.S. Patent No. 11,169,338); which is a continuation of U.S. Patent Application Serial No. 16/035,691 filed on July 15, 2018 (now U.S. Patent No. 10,281,668); which claims priority to U.S. Provisional Application Nos. 62/588,276, filed on November 17, 2017; 62/549,655, filed on August 24, 2017; and 62/532,710, filed on July 14, 2017. Based on the above, the earliest priority date for the '369 Patent is July 14, 2017.

61. The '369 Patent generally discloses a fiber optic connector for holding one or more optical ferrule assemblies. EX1001, Abstract. The '369 Patent explains that "[t]he prevalence of the Internet has led to unprecedented growth in communication networks," and so "network providers [seek] to continuously find ways to improve quality of service while reducing cost." EX1001, 1:40-44. The patent describes that while some developments have increased the volume of interconnections there is "room for improvement in the area of data centers, specifically as it relates to fiber optic connections." EX1001, 1:45-53.

62. The '369 Patent admits "manufacturers of connectors and adapters are always looking to reduce the size of the devices, while increasing ease of deployment, robustness, and modifiability after deployment." EX1001, 1:53-56. It explains that "more optical connectors may need to be accommodated in the same

footprint previously used for a smaller number of connectors in order to provide backward compatibility with existing data center equipment." EX1001, 1:56-60. The background of the patent further describes "numerous interconnections between mating connectors may be compacted into high-density panels" and that "producers may optimize for such high densities by shrinking the connector size and/or the spacing between adjacent connectors." EX1001, 2:6-11.

63. The patent explains that reducing the size of the connectors and/or spacing between adjacent connectors can create problems such as increasing the support cost, diminishing the connection quality, obstructing the release mechanisms of the connectors, and increasing the stress to the fiber optic cables. *See* EX1001, 2:11-39. The patent thus generally seeks connectors, adapters, and other assemblies that address these problems. *See, e.g.,* EX1001, 22:11-12.

B. Discussion of Certain Embodiments

64. The '369 Patent includes 69 figures, many of which are directed to entirely different embodiments of fiber optic connectors, adapters, aspects of the release assembly, and the fiber optic cable assemblies. *See generally* EX1001, 2:61-5:41, FIGS. 1-69.

65. I have reviewed and considered the full specification and each of the disclosed embodiments in the '369 Patent, and it appears to me the embodiments in FIGS. 18A-18B and FIGS. 19A-19D are generally more pertinent for the claims in

the ’369 Patent, and so I will discuss the embodiments shown in these figures in more detail.

66. FIGS. 19A-19D are reproduced here for convenience.

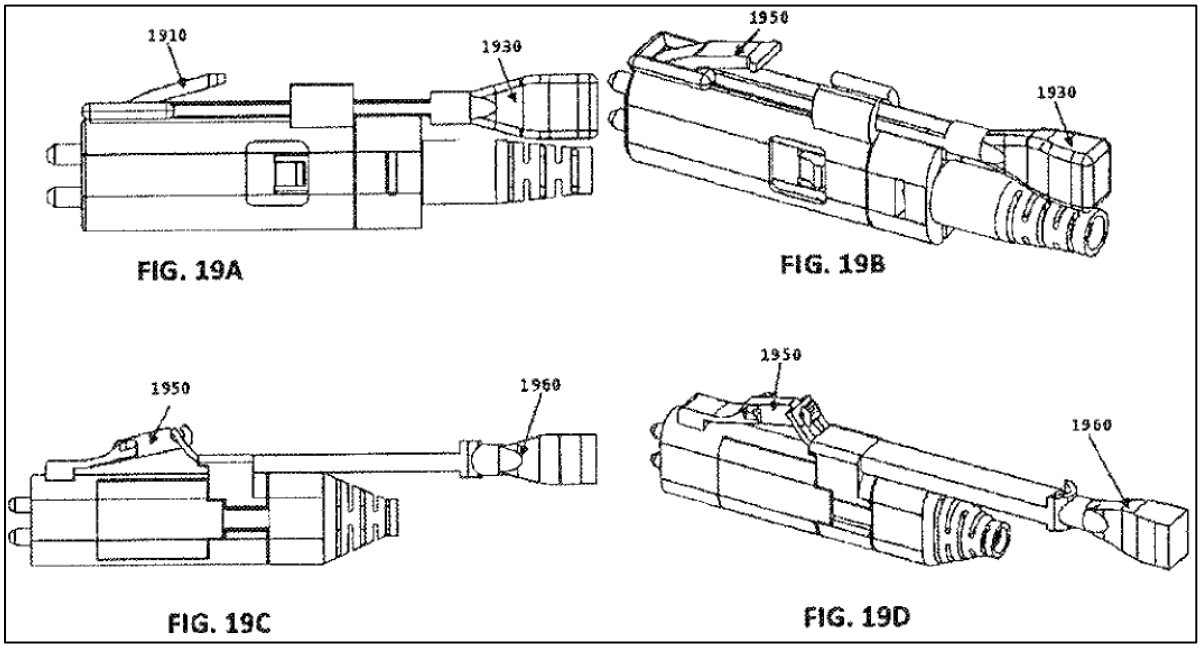

EX1001, FIGS. 19A-19D.

67. Figures 19A-19B show one embodiment and FIGS. 19C-19D depict another embodiment. Both of these embodiments involve a dual-ferrule optical connector with a push-pull tab 1930, 1960. EX1001, 12:38-60. The patent explains that the embodiments of Figures 19A-19D are distinct from the embodiment of Figure 3 because the push-pull tab 1930, 1960 is “not integrated with the optical connector housing.” EX1001, 12:38-60.

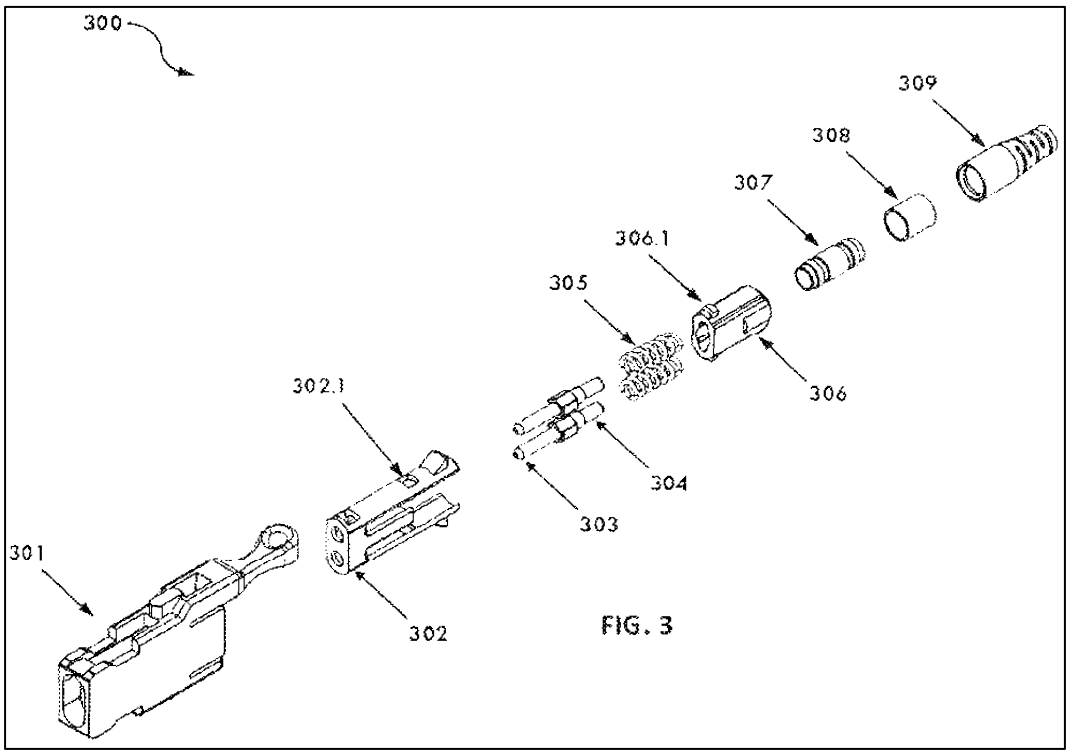

EX1001, FIG. 3.

68. Regarding the embodiment of FIGS. 19A-19B, the patent explains the push-pull tab 1930 can actuate a latch 1910 "for inserting and extracting the connector from an adapter or transceiver." EX1001, 12:42-44.

69. Regarding FIGS. 19C-D, the patent explains that it shows an alternative latching mechanism wherein "[l]atch 1950 includes a notch that is actuated by push-pull tab 1960." EX1001, 12:45-46.

70. I do not see any other description in the specification regarding these two embodiments.

71. I have reviewed the Complaint filed by Patent Owner (Senko Advanced Components) asserting Petitioner (US Conec) infringes the '369 Patent.

See generally EX1020. In particular, I have reviewed Exhibit I of the Complaint. *See* EX1007. While I do not take a position here about whether the claims of the '369 Patent are supported by the written description of the '369 Patent, nor a position about whether the claims are enabled, based on how Patent Owner has asserted these claims against Petitioner, it appears to me that Figure 19B aligns with the components recited in claim 1 as follows:

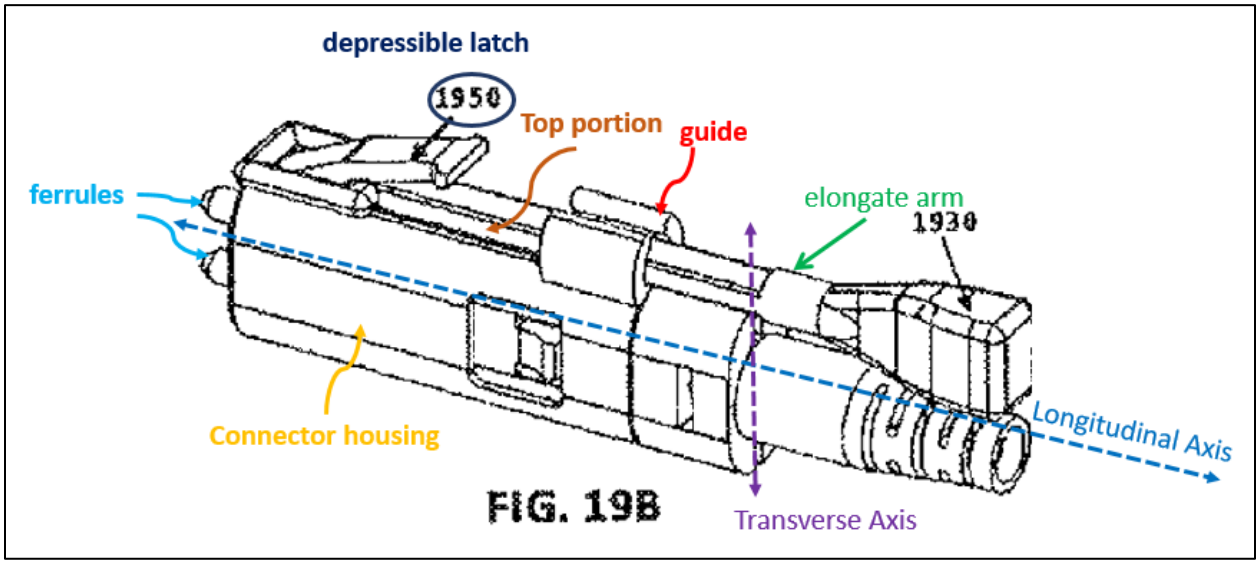

EX1001, FIG. 19B (annotated[1]).

72. There does not appear to be an express disclosure in the '369 Patent of a fiber optic connector that includes a "multi-fiber ferrule" in addition to the other

[1] All color annotations to figures in this declaration are added unless otherwise noted.

claimed elements of claims 23 and 39. However, FIGS. 18A-18B of the ’369 Patent involve an embodiment with an MT ferrule.

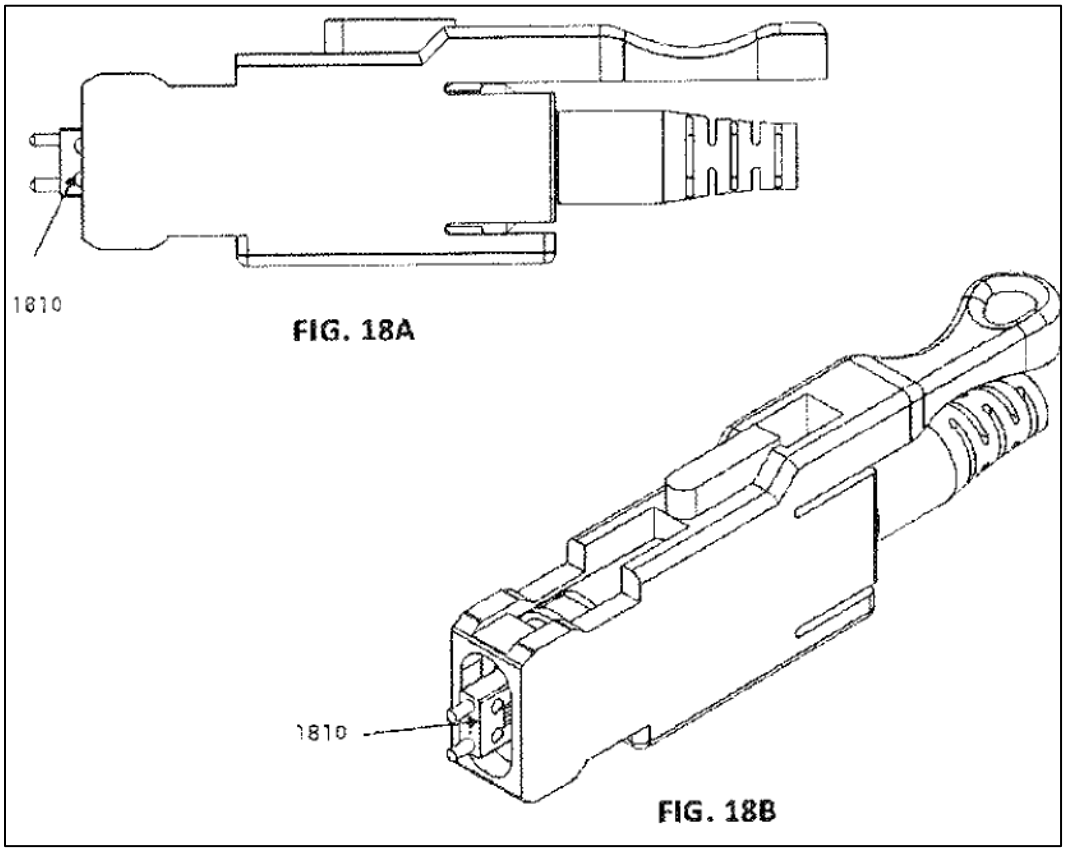

EX1001, FIGS. 18A, 18B (showing an MT ferrule 1810).

73. I know that the MT ferrule is a product made by Petitioner (US Conec). It certainly pre-dated the ’369 Patent, as I recall MT ferrules at least in the mid-1990s, as shown by U.S. Patent No. 5,615,293 (“Sayegh”). EX1019, 4:55-58 (“An example of a suitable multi-fiber connector is an MT ferrule type connector that may be obtained from U.S. Conec Ltd. of Hickory, N.C.”). For another example, authors from US Conec and Tyco Electronics released a white paper about MT ferrules in 2006, illustrating they were well-known over a decade prior

to the ’369 Patent. *See* EX1008. Further, there are other prior art references in this declaration that also disclose using MT ferrules in fiber optic connectors. See EX1003, ¶50; EX1005, ¶28.

C. Summary of Relevant Prosecution History

74. I have reviewed the file history of the ’369 patent. For purposes of this Declaration, I summarize below certain parts of the file history that I reviewed. I also received input of counsel in conjunction with this review, who explained the relevant patent law.

75. U.S. Application No. 17/370,057 (the “’057 application”) was filed on July 8, 2021. As filed, the ’057 application included thirty (30) claims, with claims 1 and 18 as the only independent claims. *See* EX1002, 0093-97. A Track One request was filed with the ’057 application. *See* EX1002, 0003.

76. The Applicant appears to have cited over 400 references in Information Disclosure Statements (IDSs) before any Office Actions were issued. *See* EX1002, 0178-81, 0203-88.

77. The first, and only, Office Action issued on November 5, 2021. *See* EX1002, 0231-39. The Office Action rejected the only pending independent claims and various dependent claims under 35 U.S.C. § 102(a)(1) as being anticipated by U.S. Patent Application Publication No. 2017/0343740 to Nguyen. *See* EX1002,

0233-35. The Office Action rejected two additional dependent claims as being obvious to a POSITA based on Nguyen alone. EX1002, 0235.

78. The November 5, 2021, Office Action then indicated that various originally filed dependent claims were allowable. EX1002, 0236. In particular, the Office Action noted that the following limitations, in combination with the limitations in the independent claim and intervening dependent claims, were not present in the prior art:

- "the connector housing comprises a guide connecting the elongate arm to the optical fiber connector";
- "the elongate arm is configured to be pulled rearward along the longitudinal axis with respect to the connector housing whereby the edge slides longitudinally along the upper surface to depress the depressible latch";
- "a push/pull tab extending from the rear end portion of the elongate arm"; and
- "the front body includes a recess and the back body includes a protrusion received in the recess to connect the back body to the front body."

See EX1002, 0236.

79. I observe the Office Action then provided the following statement:

The submission of voluminous documents in the instant information disclosure statements, including numerous documents that do not appear to relate to the claimed limitations, make it difficult, and likely impossible, for the Patent Office to fairly assess applicants' application against the prevailing statutory criteria.

The numerous references and materials listed on the submitted **47** sheets of the IDS's make it difficult to determine whether or not any of the references, or parts of the references, are material to applicants' claimed invention. It is noted that applicants, in their several IDS submissions, do not indicate any particular reference or parts of references which they deem "material" to the patentability of the pending claims under 37 CFR 1.56(b).

Applicants are reminded of the standard set forth in the leading inequitable conduct case of J.P. Stevens & Co. v. Lex Tex Ltd., 747 F.2d 1553, 223 USPQ 1089 (Nov. 9, 1984), cert. denied, 106 S.Ct. 73 (1985): Where none of the prior art cited during prosecution teaches a key element of the claim(s) and where a reference known to the applicants does, the applicants should know that reference is material. Thus, if applicants are aware of any cited reference from among the information disclosure(s) of **the 47 sheets** that are "material," applicants should make that reference known to the examiner.

It is also noted that a "misrepresentation is material if it makes it impossible for the Patent Office fairly to assess [the patent] application against the prevailing statutory criteria." In re Multidistrict-Litig. Involving Forst Patent, 540 F.2d 601, 604, 191 USPQ 241, 243 (3d Cir.

EX1002, 0237.

Application/Control Number: 17/370,057 Page 7
Art Unit: 2874

1976); see also Monsanto Co. v. Rohm & Haas Co., 456 F.2d 592, 600, 172 USPQ 323, 329 (3d Cir.), ce.rt. denied, 40'7 U.S. 934, 174 USPQ 129 (1972). And, the submission of voluminous documents in the instant information disclosure statements (here, in excess of **47 sheets of** documents) make it difficult, and likely impossible, for the Patent Office to fairly assess applicants' application against the prevailing statutory criteria.

It is desirable to avoid the submission of long lists of documents if it can be avoided. Eliminate clearly irrelevant and marginally pertinent cumulative information. If a long list is submitted, highlight those documents which have been specifically brought to applicant's attention and/or are known to be of most significance. See Penn Van Boats, Inc. v. Sea Lark Boats, Inc., 359 F. Supp. 948, 175 USPQ 260 (S.D. Fla. 1972), affc/, 479 F.2d 1338, 178 USPQ 577 (5th Cir. 1973), cert, denied, 414 U.S. 874 (1974). But of. Moiins PLC v. Textron Inc., 48 F.3d 1172, 33 USPG2d 1823 (Fed. Cir. 1995). (See MPEP 2004 13).

EX1002, 0238.

80. In response to the allowable subject matter noted in the Office Action, the Applicant rewrote seven allowed dependent claims into independent form. *See* EX1002, 0297-304. The Applicant also added twelve (12) new dependent claims in this Amendment. *See* EX1002, 0297-304.

81. A Notice of Allowance issued on December 9, 2021. EX1002, 0309-17. No further substantive analysis or explanation was included. EX1002, 0309-17. The Examiner noted U.S. Patent No. 11,181,170 to Wong "discusses an optical

connector from the same Assignee, Senko Advanced Components," but it is not clear what impact, if any, this reference had on the Examiner's analysis. EX1002, 0316. The Applicant submitted additional claim amendments on February 1 and February 8, 2022, in a submission under 37 C.F.R. § 1.312. EX1002, 0344-51. The Examiner subsequently allowed these amendments and the patent issued on April 19, 2022. EX1001, cover.

D. Claims of the '369 Patent

82. The '369 Patent issued with 40 claims, of which claims 1, 20-23, 39, and 40 are independent claims. I reproduce the independent claims below for reference.

1. Declaration 1: Claims 1-22

a. Independent Claim 1 of the '369 Patent

Claim 1 recites:

> **[1pre]** An optical fiber connector comprising:
>
> **[1.1]** first and second optical fiber ferrules;
>
> **[1.2]** a connector housing having a front end portion and a rear end portion spaced apart along a longitudinal axis, the connector housing comprising a top portion and a bottom portion spaced apart along a transverse axis perpendicular to the longitudinal axis,

[1.3] the connector housing holding the first and second optical fiber ferrules such that the first and second optical fiber ferrules are exposed through the front end portion for making an optical connection and the first and second optical fiber ferrules are spaced apart from one another along the transverse axis,

[1.4] a depressible latch above the top portion of the connector housing; and

[1.5] an elongate arm connected to the connector housing above the top portion and configured to be pulled to actuate the depressible latch;

[1.6] wherein the connector housing comprises a guide connecting the elongate arm to the optical fiber connector.

EX1001, 24:28-47.

b. Independent Claim 20 of the ’369 Patent

Claim 20 recites:

[20pre] An optical fiber connector comprising:

[20.1] first and second optical fiber ferrules;

[20.2] a connector housing having a front end portion and a rear end portion spaced apart along a longitudinal axis, the

connector housing comprising a top portion and a bottom portion spaced apart along a transverse axis perpendicular to the longitudinal axis,

[20.3] the connector housing holding the first and second optical fiber ferrules such that the first and second optical fiber ferrules are exposed through the front end portion for making an optical connection and the first and second optical fiber ferrules are spaced apart from one another along the transverse axis,

[20.4] a depressible latch above the top portion of the connector housing; and

[20.5] an elongate arm connected to the connector housing above the top portion and configured to be pulled to actuate the depressible latch;

[20.6] wherein the elongate arm comprises a front end portion and a rear end portion spaced apart along the longitudinal axis;

[20.7] wherein the front end portion of the elongate arm defines an opening;

[20.8] wherein the depressible latch is received in the opening;

[20.9] wherein the depressible latch has a front end portion and rear end portion spaced apart along the longitudinal axis and wherein the depressible latch extends upward along the transverse axis as the depressible latch extends along the longitudinal axis from the front end portion to the rear end portion of the depressible latch;

[20.10] wherein the rear end portion of the depressible latch is spaced apart above the top portion of the connector housing along the transverse axis;

[20.11] wherein the front end portion of the elongate arm includes an edge defining a front end of the opening;

[20.12] wherein the depressible latch has an upper surface, the edge opposing the upper surface;

[20.13] wherein the elongate arm is configured to be pulled rearward along the longitudinal axis with respect to the connector housing whereby the edge slides longitudinally along the upper surface to depress the depressible latch.

EX1001, 25:40-26:14.

c. Independent Claim 21 of the '369 Patent

Claim 21 recites:

[21pre] An optical fiber connector comprising:

[21.1] first and second optical fiber ferrules;

[21.2] a connector housing having a front end portion and a rear end portion spaced apart along a longitudinal axis, the connector housing comprising a top portion and a bottom portion spaced apart along a transverse axis perpendicular to the longitudinal axis,

[21.3] the connector housing holding the first and second optical fiber ferrules such that the first and second optical fiber ferrules are exposed through the front end portion for making an optical connection and the first and second optical fiber ferrules are spaced apart from one another along the transverse axis,

[21.4] a depressible latch above the top portion of the connector housing; and

[21.5] an elongate arm connected to the connector housing above the top portion and configured to be pulled to actuate the depressible latch;

[21.6] wherein the elongate arm comprises a front end portion and a rear end portion spaced apart along the longitudinal axis;

[21.7] the optical fiber connector further comprising a push/pull tab extending from the rear end portion of the elongate arm.

EX1001, 26:15-38.

d. Independent Claim 22 of the '369 Patent

Claim 22 recites:

[22pre] An optical fiber connector comprising:

[22.1] first and second optical fiber ferrules;

[22.2] a connector housing having a front end portion and a rear end portion spaced apart along a longitudinal axis, the connector housing comprising a top portion and a bottom portion spaced apart along a transverse axis perpendicular to the longitudinal axis,

[22.3] the connector housing holding the first and second optical fiber ferrules such that the first and second optical fiber ferrules are exposed through the front end portion for making an optical connection and the first and second optical fiber

ferrules are spaced apart from one another along the transverse axis,

[22.4] a depressible latch above the top portion of the connector housing; and

[22.5] an elongate arm connected to the connector housing above the top portion and configured to be pulled to actuate the depressible latch;

[22.6] wherein the connector housing includes a front body and a back body;

[22.7] wherein the front body includes a recess and the back body includes a protrusion received in the recess to connect the back body to the front body.

EX1001, 26:39-61.

2. Declaration 2: Claims 23-40

a. Independent Claim 23 of the '369 Patent

Claim 23 recites:

[23pre] An optical fiber connector comprising:

[23.1] a multi-fiber ferrule configured to terminate a plurality of optical fibers;

[23.2] a connector housing having a front end portion and a rear end portion spaced apart along a longitudinal axis, the connector housing comprising a top portion and a bottom portion spaced apart along a transverse axis perpendicular to the longitudinal axis,

[23.3] the connector housing being configured to hold the multi-fiber ferrule such that the multi-fiber ferrule is exposed through the front end portion for making an optical connection and the plurality of optical fibers are spaced apart from one another in a row extending parallel to the transverse axis,

[23.4] a depressible latch above the top portion of the connector housing; and

[23.5] an elongate arm connected to the connector housing above the top portion and configured to be pulled to actuate the depressible latch;

[23.6] wherein the connector housing comprises a guide connecting the elongate arm to the optical fiber connector.

EX1001, 26:62-27:16.

b. Independent Claim 39 of the ’369 Patent

Claim 39 recites:

[39pre] An optical fiber connector comprising:

[39.1] a multi-fiber ferrule configured to terminate a plurality of optical fibers;

[39.2] a connector housing having a front end portion and a rear end portion spaced apart along a longitudinal axis, the connector housing comprising a top portion and a bottom portion spaced apart along a transverse axis perpendicular to the longitudinal axis,

[39.3] the connector housing being configured to hold the multi-fiber ferrule such that the multi-fiber ferrule is exposed through the front end portion for making an optical connection and the plurality of optical fibers are spaced apart from one another in a row extending parallel to the transverse axis,

[39.4] a depressible latch above the top portion of the connector housing; and

[39.5] an elongate arm connected to the connector housing above the top portion and configured to be pulled to actuate the depressible latch;

[39.6] wherein the elongate arm comprises a front end portion and a rear end portion spaced apart along the longitudinal axis;

[39.7] wherein the front end portion of the elongate arm defines an opening;

[39.8] wherein the depressible latch is received in the opening;

[39.9] wherein the depressible latch has a front end portion and rear end portion spaced apart along the longitudinal axis and wherein the depressible latch extends upward along the transverse axis as the depressible latch extends along the longitudinal axis from the front end portion to the rear end portion of the depressible latch;

[39.10] wherein the rear end portion of the depressible latch is spaced apart above the top portion of the connector housing along the transverse axis;

[39.11] wherein the front end portion of the elongate arm includes an edge defining a front end of the opening;

[39.12] wherein the depressible latch has an upper surface, the edge opposing the upper surface:

[39.13] wherein the elongate arm is configured to be pulled rearward along the longitudinal axis with respect to the connector housing whereby the edge slides longitudinally along the upper surface to depress the depressible latch.

EX1001, 28:1-47.

c. Independent Claim 40 of the ’369 Patent

Claim 40 recites:

[40pre] An optical fiber connector comprising:

[40.1] a multi-fiber ferrule configured to terminate a plurality of optical fibers;

[40.2] a connector housing having a front end portion and a rear end portion spaced apart along a longitudinal axis, the connector housing comprising a top portion and a bottom portion spaced apart along a transverse axis perpendicular to the longitudinal axis,

[40.3] the connector housing being configured to hold the multi-fiber ferrule such that the multi-fiber ferrule is exposed through the front end portion for making an optical connection and the plurality of optical fibers are spaced apart from one another in a row extending parallel to the transverse axis,

[40.4] a depressible latch above the top portion of the connector housing; and

[40.5] an elongate arm connected to the connector housing above the top portion and configured to be pulled to actuate the depressible latch;

[40.6] wherein the elongate arm comprises a front end portion and a rear end portion spaced apart along the longitudinal axis;

[40.7] further comprising a push/pull tab extending from the rear end portion of the elongate arm.

EX1001, 28:48-29:5.

VI. CLAIM INTERPRETATION

83. I understand that in interpreting claims, I should consider the literal language of the claim at issue, as well as the language of other claims, the specification, and the prosecution history of the underlying claims.

84. I also understand that the words of a claim should be given their plain and ordinary meaning as understood by those of skill in the art, unless it is clear from the specification or prosecution history (or both) that a different meaning was intended.

85. I understand that Petitioner does not propose any claim constructions. I agree that no constructions are necessary to determine whether the prior art discussed below establishes the elements recited in the claims.

VII. PRIOR ART

A. Overview of Scherer

86. International Patent Application Publication No. WO 2015/027033 A1 is titled "Traceable Networking Cables with Remote-Released Connectors." EX1003, Cover. The named inventors are Christopher B. Scherer and Jon Sholtis, and International Patent Application Publication No. WO 2015/027033 A1 (hereinafter "Scherer") published on February 26, 2015. EX1003, Cover. This patent publication is based on International Application No. PCT/US2014/052040, which was filed on August 21, 2014. EX1003, Cover. This application claims benefit to U.S. Provisional Application No. 61/868,193 filed on August 21, 2013.

87. I understand that Scherer is prior art to the '369 Patent based on my knowledge, experience, discussion of the legal standards above, and discussions with counsel. In particular, I understand that Scherer has both a filing date and a publication date prior to the earliest possible priority date of the '369 Patent (July 14, 2017), and so Scherer qualifies as prior art at least for those reasons.

88. Scherer relates to "traceable remote-release networking cables with telltales at their ends to facilitate tracing of the cables and their ends, such as, for

example, in data rooms that can include hundreds of individual networking cables," and within Scherer's disclosure "[s]ome cables include conductive wire transmission line(s). Other cables include one or more fiber-optic transmission lines." EX1003, Cover, (57). Scherer explains that its "cable tracer technologies and techniques can also be included in fiber optic cables," and relevant "[e]xamples of connectors for optical-fiber cables include single-fiber (e.g., LC) connectors, multi-fiber (e.g., MPO and/or MTP) connectors, and/or any other optical-fiber connectors (e.g., SC, ST, and the like)." EX1003, ¶50.

89. Scherer further explains that "FIGS. 11-14 depict various embodiments of cables 300a, 300b, 300c with fiber-optic cable connector hoods 310a, 310b, 310c" and "[e]ach of connector hoods 310a, 310b, and 310c can be configured in any of various ways." EX1003, ¶51. Scherer depicts distal, connecting ends of an optical fiber cable (referred to as "transmission line(s) 52a") protruding from front ends of the connector hoods pictured in Figures 10-13.

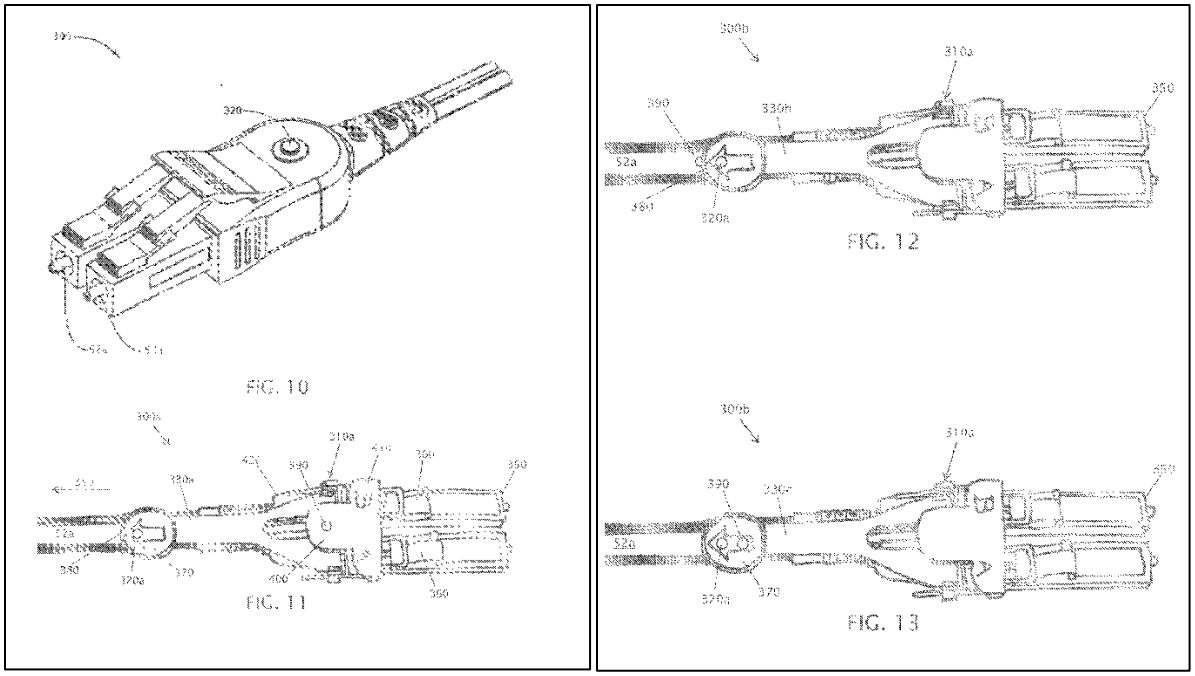

EX1003, FIGS. 10-13.

90. The hoods 310a, 310b, 310c "each include[] an extender or remote release tab (330a, 330b, 330c) which improves the ease of releasing the respective connector in high-density environments because the extender or remote release tab can simply be pulled by a user in a direction 340 away from a distal end 350 of the connector to laterally compress the lever(s) (360) of the connector toward the transmission line(s) 52a." EX1003, ¶51. Compressing the lever releases the connector because Scherer's levers function to resist release of connector hoods from a mating connector or jack. EX1003, ¶¶5, 10.

91. Scherer discloses another embodiment wherein "FIG. 14 depicts cutaway side view of a first end of a fourth embodiment 300d of the present fiber-optic cables. Cable 300d is similar to cable 300c with the primary exception that

cable 300d includes only a single fiber optic cable (which is omitted for clarity)." EX1003, ¶54. Thus, like the connector hoods 310a, 310b, 310c, Scherer's "connector hood 310d includes extender 300d [*sic*] that is configured to be removably coupled to connector body 400a such that extender 300d [*sic*] can slide relative to connector body 400a to depress or compress lever 360a." EX1003, ¶54. Because Scherer refers to a "cable 300 d" three times and "extender 330d" in the same paragraph, a POSITA would understand that the foregoing reference to "extender 300d" is a clerical error, and that the intended element is "extender 330d." EX1003, ¶54.

92. Scherer's connector hood 310d is depicted below.

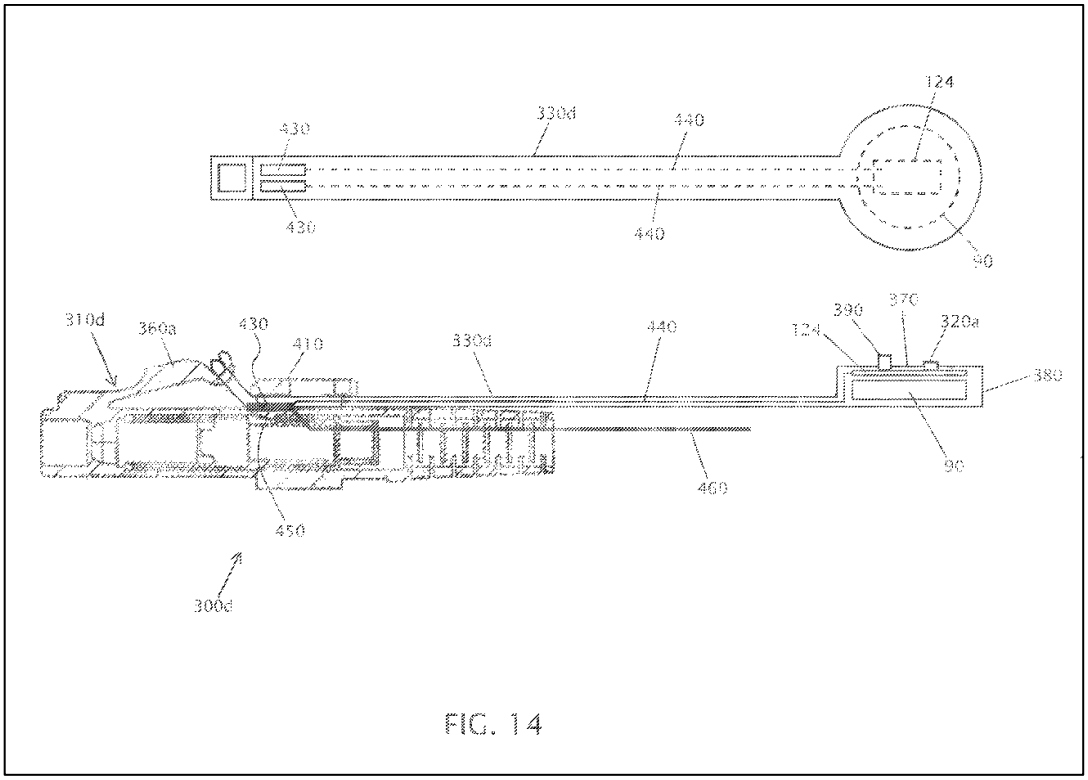

EX1003, FIG. 14.

B. Overview of Lee

93. International Patent Application Publication No. WO 2017/127208 A1 is titled "Fiber Optic Connector with Small Profile, and Cable Assemblies, Systems, and Methods Including the Same." EX1004, Cover. The only named inventor is Jhih-Ping Lee, and International Patent Application Publication No. WO 2017/127208 A1 (hereinafter "Lee") published on July 27, 2017. EX1004, Cover. Lee is based on International Application No. PCT/US2016/067903, which was filed on December 21, 2016. EX1004, Cover. Lee claims the benefit of to two U.S. provisional patent applications – U.S. Provisional Application No. 62/388,129 filed on January 20, 2016, and U.S. Provisional Application No. 62/398,673 filed on September 23, 2016. EX1004, Cover.

94. I understand that Lee is prior art to the '369 Patent based on my knowledge, experience, discussion of the legal standards above, and discussions with counsel. In particular, I understand that Lee has a filing date prior to the earliest possible priority date of the '369 Patent (July 14, 2017), and so Lee qualifies as prior art at least for this reason.

95. Lee generally describes fiber optic connectors suitable for use in, for example, data centers. EX1004, ¶2. Lee explains the disclosure "also relates to cable assemblies, systems, and methods including such fiber optic connectors." EX1004, ¶2.

96. Lee explains that connectors are typically provided on the ends of optical fiber cables to conveniently provide connections for data transmission. EX1004, ¶3. Lee further describes that "[t]he connectors are designed to be received in ports that align the optical fiber(s) carried by connectors with the optical fiber(s) of other connectors or with equipment (e.g., transceivers) so that data can be transmitted between the components." EX1004, ¶3. Lee explains that a desire for high bandwidth tends to drive a need for a high-density of interconnects. EX1004, ¶4. Lee identifies that it "can be a challenge, however, to design fiber optic connectors [capable] of providing high-density interconnects" because, *e.g.*, "[t]he fiber optic connectors often become more difficult to handle and less robust as components are made smaller." EX1004, ¶4.

97. Therefore, I believe a POSITA would understand Lee to articulate a goal of designing small interconnects that provide sufficient robustness and handleability (*e.g.*, the ability to be easily removed and installed).

98. Lee discloses a fiber optic connector 10 and an adapter 12 and illustrates this fiber optic connector system 14 in Figure 1.

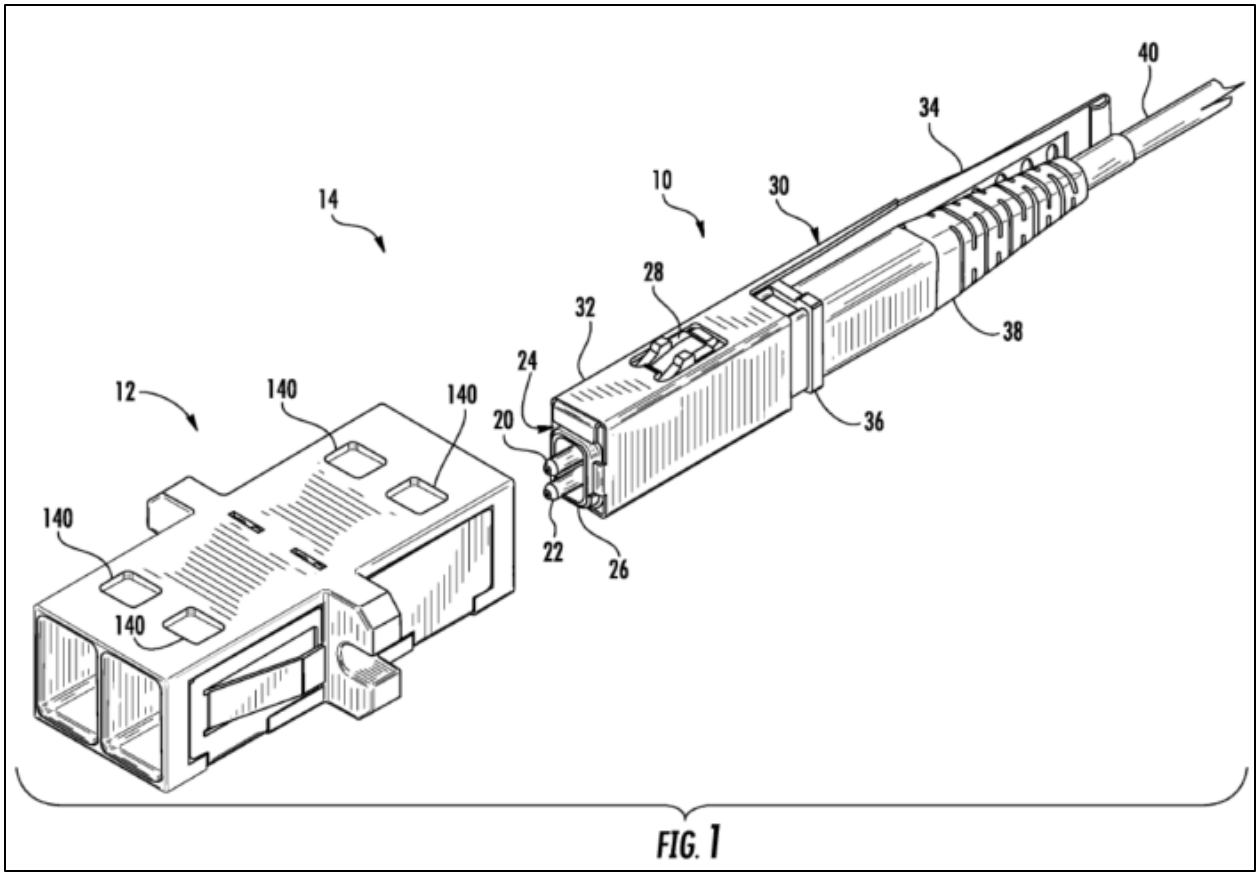

EX1004, FIG. 1.

99. The fiber optic connector 10 "is designed to have a small profile and thereby enable high-density interconnects." EX1004, ¶29.

100. As shown in Figure 1, the fiber optic connector 10 includes a first ferrule 20 and a second ferrule 22 exposed at a front end 26 of the fiber optic connector 10 for mating with the adapter 12. *See* EX1004, ¶30. The fiber optic connector 10 includes an inner connector body 24 and a latch arm 28 that extends upward from the inner connector body 24. EX1004, ¶30.

101. The fiber optic connector includes a handle 30, which includes a housing portion 32 that houses the inner connector body 24. EX1004, ¶30. The

handle 30 includes "a grip portion 34 extending rearwardly from the housing portion 32." EX1004, ¶30. Lee explains "the handle 30 can move relative to the inner connector body 24 so that the housing portion 32 can cause the latch arm 28 to flex toward the inner connector body 24." EX1004, ¶30.

102. As can also be seen in Figure 1, the fiber optic connector 10 includes an outer connector body 36, which is "coupled to the inner connector body 24 within the housing portion 32 of the handle 30." EX1004, ¶30. "A boot 38 is coupled to the outer connector body 36 outside of the housing portion." EX1004, ¶30.

103. Figure 2 of Lee illustrates an exploded view of the fiber optic connector 10.

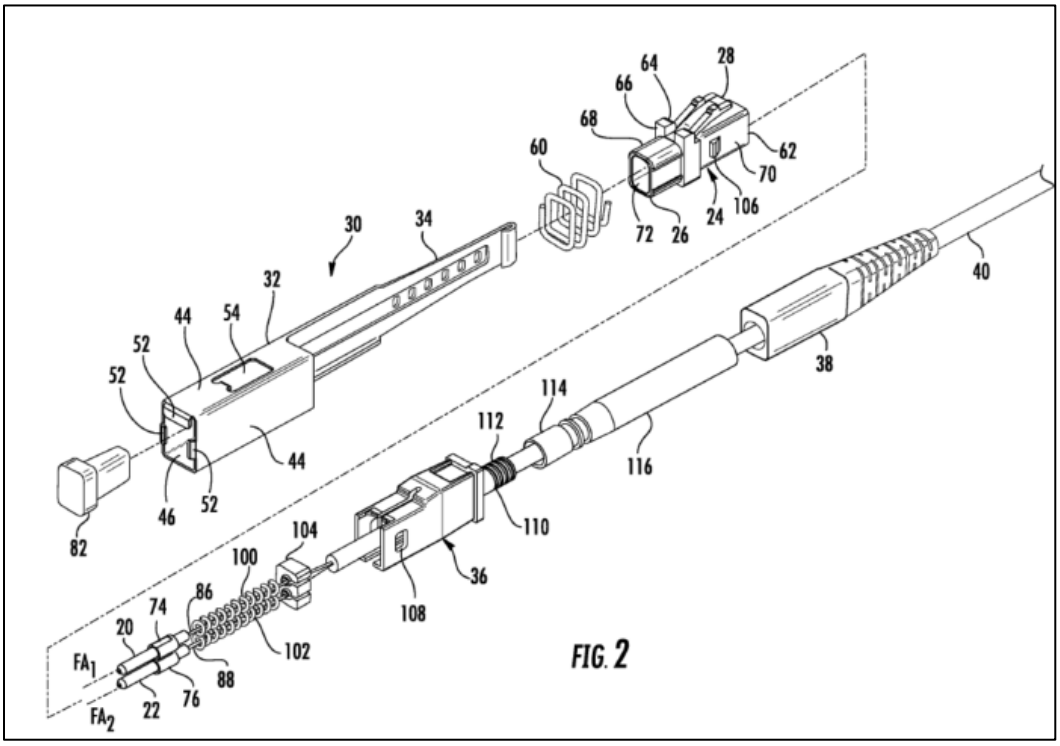

EX1004, FIG. 2.

104. Figure 2 illustrates "the housing portion 32 of the handle 30 is in the form of a tubular body having a rectangular profile defined by sides 44." EX1004, ¶31. "Three of the sides 44 each include a tab 52 located in the front opening 46." EX1004, ¶31. "Additionally, one of the sides 44 includes an opening 54 for through which the latch arm 28 extends when the inner connector body 24 is received in the housing portion 32 (see Fig. 1)." EX1004, ¶31. As can be seen from looking at FIGS. 1 and 2 in conjunction with one another, the latch arm 28 of the inner connector body 24 is positioned to protrude through the opening 54 of the handle 30. Further, the inner connector body 24 is connected to the outer connector body 36. *See* EX1004, ¶¶38-39. For example, Lee discusses that the inner and outer connector bodies 24, 36 may be coupled together "in any suitable manner," such as snapping together, latching together, and/or coupled by springs. *See* EX1004, ¶¶38-39.

105. Lee shows enlarged perspective views in FIGS. 4 and 5 to help further illustrate and describe "how the handle 30 cooperates with the inner connector body 24." EX1004, ¶41.

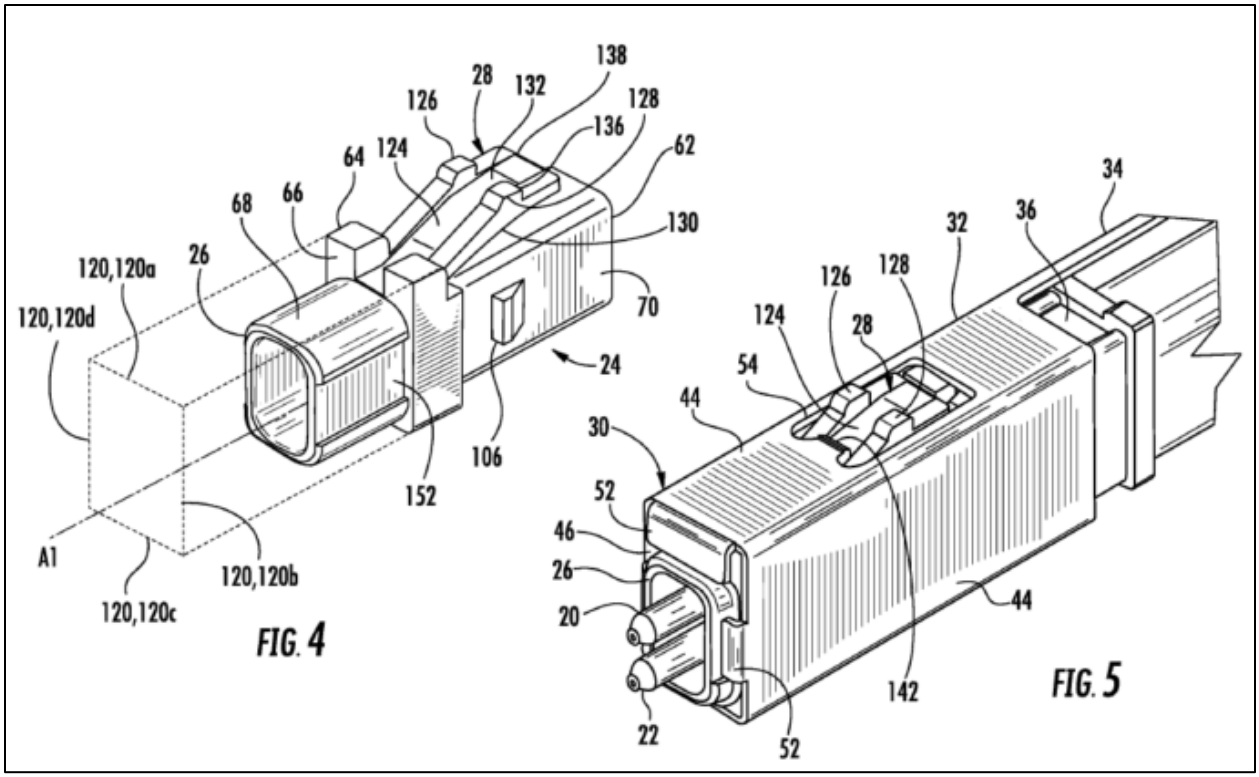

EX1004, FIGS. 4-5.

106. Lee explains that the latch arm 28 has particular dimensions (*e.g.*, the ramp 124 and first and second latching features 126) that allow the latch arm 28 to protrude through the opening 54 and then to be depressed when the handle 30 is pulled rearward. *See* EX1004, ¶¶42-47.

107. Further, Lee discloses that the housing portion 32 of the handle 30 includes a pushing feature 142 "for contacting the latch arm 24." EX1004, ¶47. Lee explains that in the embodiment shown in Figure 5, "the pushing feature 142 is in the form of a finger extending into the opening 54." EX1004, ¶47.

108. The pushing feature 142 includes a rounded surface 144 (as best seen in Figure 3). This rounded surface 144 is configured to depress the latch arm 28 by contacting the ramp 124 of the latch arm 28. EX1004, ¶47.

109. In operation, Lee's handle 30 is withdrawn in the rearward direction to move the handle 30 (and thus the housing portion 32 of the handle) rearward relative to the inner connector body 24 to depress the latch arm 28. *See* EX1004, ¶¶42-51, 63-66, FIGS. 4, 5, 9, 10. This allows the fiber optic connector 10 to be removed from the adapter 12. *See* EX1004, ¶¶42-51, 63-66, FIGS. 4, 5, 9, 10.

110. The inner connector housing 24 includes guide channels 152. *See, e.g.*, EX1004, ¶50, FIG. 4. Two of the tabs 52 of the forward end of the housing portion 32 are received in the guide channels 152, and the "tabs 52 travel along the guide channels 152 when the handle 30 moves relative to the inner connector body 24." EX1004, ¶50, FIG. 4.

C. Overview of Gniadek

111. U.S. Patent No. 8,465,317 is titled "Latching connector with remote release." EX1010, Cover. The named inventors are Jeffrey Gniadek and Jimmy Jun-Fu Chang, and U.S. Patent No. 8,465,317 (hereinafter "Gniadek") was granted on June 18, 2013. EX1010, Cover. This patent issued from U.S. Application No. 13/286,773, which was filed on November 1, 2011. EX1010, Cover. This patent

claims benefit to U.S. Provisional Application No. 61/543,419, filed on October 5, 2011.

112. I understand that Gniadek is prior art to the ’369 Patent based on my knowledge, experience, discussion of the legal standards above, and discussions with counsel. In particular, I understand that Gniadek has both a filing date and a publication date prior to the earliest possible priority date of the ’369 Patent (July 14, 2017), and so Gniadek qualifies as prior art at least for those reasons.

113. Gniadek relates to optical interconnect technology. EX1010, 1:13-15. Gniadek observes that growth in communication networks has driven deployment of high density interconnect panels. EX1010, 1:16-1:22. Gniadek goes on to explain that higher densities can be achieved by “shrinking the connector size and/or the spacing between adjacent connectors on the panel,” but either solution “increases the support cost and diminishes the quality of service.” EX1010, 1:34-40. Gniadek also describes how high density panel configurations make preexisting connector release mechanism difficult to access. EX1010, 1:61-2:5.

114. Gniadek responds to the above described difficulties associated with high density environments with connectors having connector housings that in turn include levers. EX1010, 2:45-49. The levers can be actuated to selectively disengage the connectors. EX1010, 2:49-51. One such connector is a latching connector 816 for an optical fiber transmission medium 812. EX1010, 16:18-25.

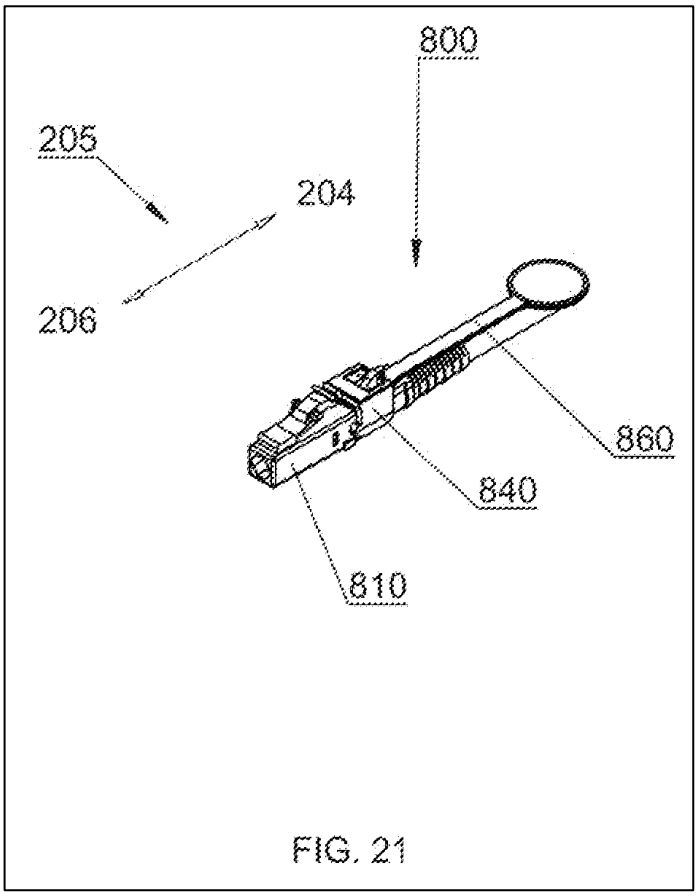

EX1010, FIG. 21.

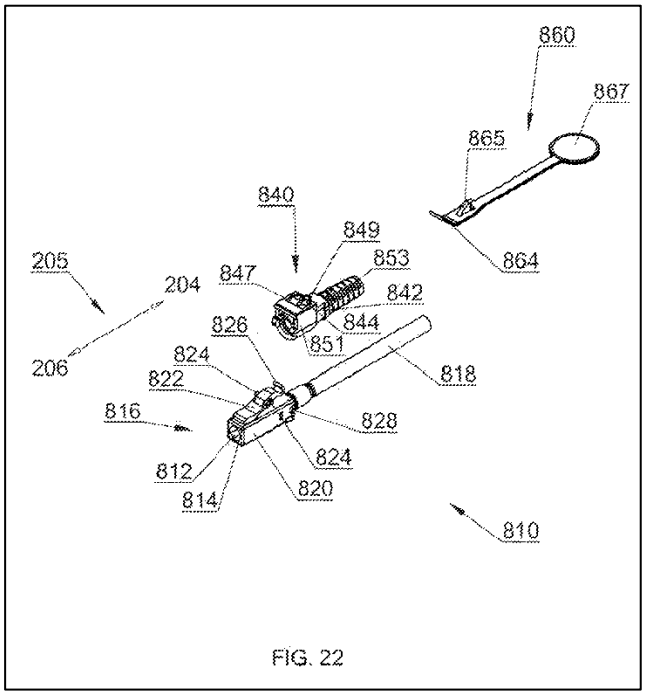

EX1010, FIG. 22.

115. The connector 816 includes a lever 822 with latches 824. EX1010, 16:20-30. An extender 860 is connected to the lever 822 such that pulling the extender 860 depresses the lever 822. EX1010, 17:20-29.

116. The connector 816 is part of a cable assembly 800 that also includes a boot 840. EX1010, 16:15-17. The boot 840 provides strain relief for the transmission medium 812. EX1010, 16:34-39. The connector 816 further includes a trap 828, and the boot 840 includes a protruding member 851 configured to be received in the trap 828 to couple the boot 840 to the connector 816. EX1010, 17:2-11.

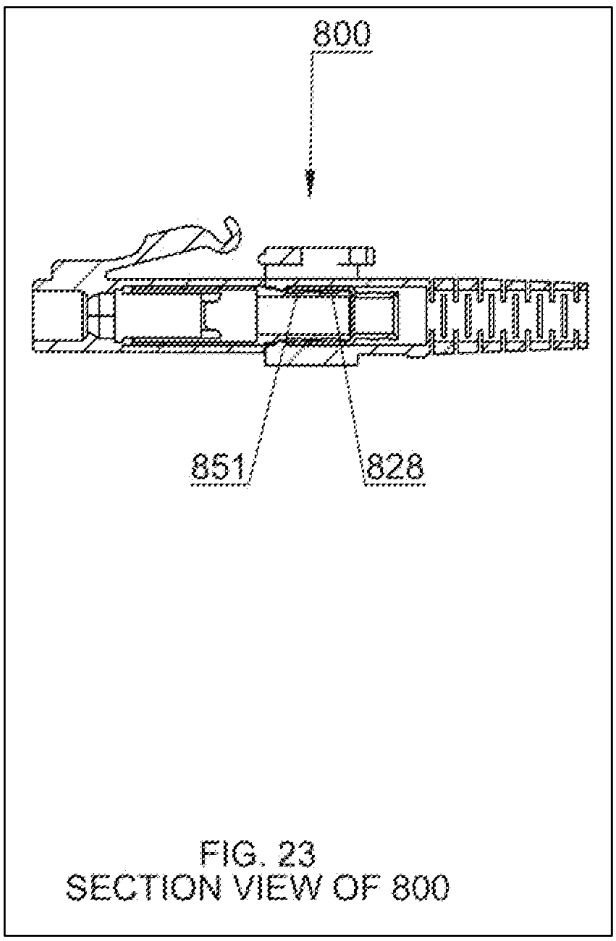

EX1010, FIG. 23.

VIII. SUMMARY OF GROUNDS

117. In my opinion, the Challenged Claims are invalid as either anticipated or obvious in view of the prior art.

118. This table summarizes the grounds that I believe show invalidity of claims 1-22 found in my first Declaration and the first Petition (IPR2024-00115):

Ground	Basis	Reference(s)	Claims
1	§ 103	Scherer (EX1003) and Lee (EX1004)	1-17, 20, and 21

Ground	Basis	Reference(s)	Claims
2	§ 103	Scherer, Lee, and Gniadek	18, 19, and 22
3	§ 102	Lee	1-17, 20, and 21
4	§ 103	Lee	18, 19, 21, and 22

119. This table summarizes the grounds that I believe show invalidity of claims 23-40 found in my second Declaration and the second Petition (IPR2024-00116):

Ground	Basis	Reference(s)	Claims
1	§ 102	Nguyen (EX1009)	23-36 and 40
2	§ 103	Nguyen and Lin (EX1005)	27-39
3	§ 103	Scherer and Lin	23-36, 39, and 40
4	§ 103	Scherer, Lin, and Gniadek	37 and 38

IX. GROUND 1: SCHERER IN VIEW OF LEE RENDERS OBVIOUS CLAIMS 1-17, 20, AND 21

120. For at least the reasons below, it is my opinion that the combination of Scherer and Lee renders obvious independent claim 1, independent claim 20, and independent claim 21 of the ’369 Patent. Additionally, Scherer and Lee render obvious dependent claims 2-17.

121. I will explain numerous other reasons why I believe a POSITA would have found this combination obvious, but at a high level, both dual-ferrule

connectors and multi-fiber ferrule connectors are common optical fiber system components that have been used for many years in the field by the same engineers solving the same problems – without undue research or experimentation.

122. Repositioning ferrules relative to a latch is something that any POSITA would have known how to do and been motivated to do based on the desired data transmission capacity and overall data transmission system design, as well as the desire to reduce spacing between components to optimize connector density within the system.

123. Indeed, the '369 Patent itself explains that "connectors are used herein merely for simplicity purposes, and that various other connectors may be used <u>in any embodiment (e.g., an MT connector</u> …)." EX1001, 22:25-29 (emphasis added).

124. Therefore, the '369 Patent reflects an understanding consistent with mine – a POSITA would have known that swapping known connector configurations is a matter of mere design choice.

A. Motivation to Combine

1. Scherer

125. Prior art Scherer teaches an invention related to fiber optic cables and specifically networking cables. EX1003, ¶2.

126. More specifically, Scherer discloses optical fiber connector hoods that "can be configured in any of various ways." EX1003, ¶51. The hoods "each include[] an extender or remote release tab… which improves the ease of releasing the respective connector in high-density environments because the extender or remote release tab can simply be pulled by a user in a direction 340 away from a distal end 350 of the connector to laterally compress the lever(s) (360) of the connector toward the transmission line(s) 52a." EX1003, ¶51. Scherer further discloses wherein the front ends of the extenders 330a, 330b, 330c, 330d each define an opening for receiving the lever 360/360a, and wherein the extender includes an edge opposing the upper surface of the lever 360/360a such that pulling the extender rearwardly depresses the lever 360/360a. EX1003, ¶¶50-54, FIGs. 11-14. Compressing the lever releases the connector because Scherer's levers function to resist release of connector hoods from a mating connector or jack. EX1003, ¶¶7, 12. Scherer's connector hoods can be used to secure two-ferrule connections or single-ferrule connections. EX1003, ¶¶52, 54, 55. Scherer depicts a representative connector for a single transmission line in Figure 14. EX1003, ¶54, FIG. 14.

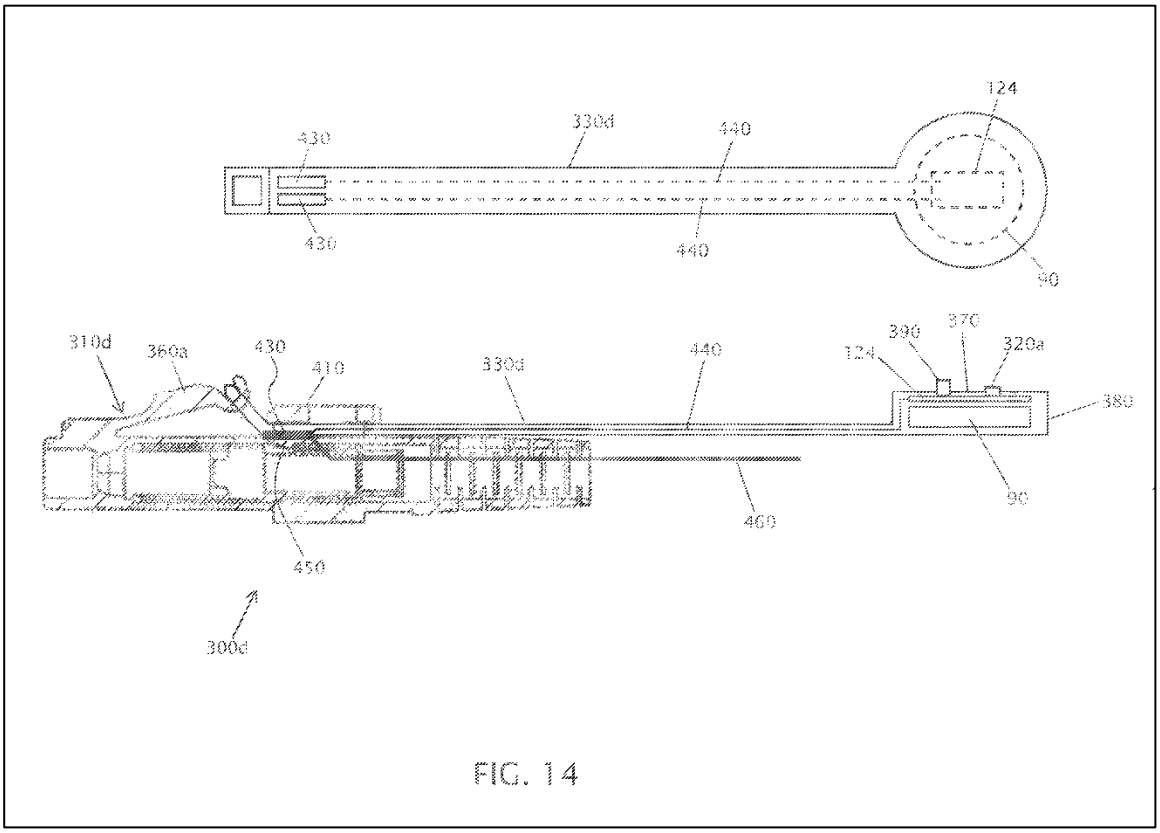

EX1003, FIG. 14.

127. Patent Owner may allege that Scherer does not expressly disclose wherein a connector comprises first and second optical fiber ferrules wherein the connector housing is configured to hold the ferrules such that the ferrules are spaced apart from one another along a transverse axis while a depressible latch is above a top portion of the connector housing along the transverse axis. Patent Owner may further allege that Scherer does not expressly disclose wherein the edge slides longitudinally along the upper surface of the lever 360/360a when the extender is pulled rearwardly. However, such features would have been well-known to a POSITA, as described by Lee.

2. Lee

128. Lee also discloses optical fiber connectors for data transmission. *See* EX1004, ¶¶2-4.

129. Similarly, Lee discloses a fiber optic connector system 14 that includes at least one fiber optic connector 10 and an adapter 12. EX1004, ¶29. Lee shows a fiber optic connector 10 with first and second fiber optic ferrules 20, 22 as seen below in Figure 1. Ferrules 20 and 22 are aligned along the transverse axis. Lee's fiber optic connector 10 includes a latch arm 28 that extends outwardly from an inner connector body 24. EX1004, ¶30, 44. Lee discloses a handle 30 that is pulled rearward to depress the latch arm 28 in order to remove the connector 10 from the adapter 12. EX1004, ¶65.

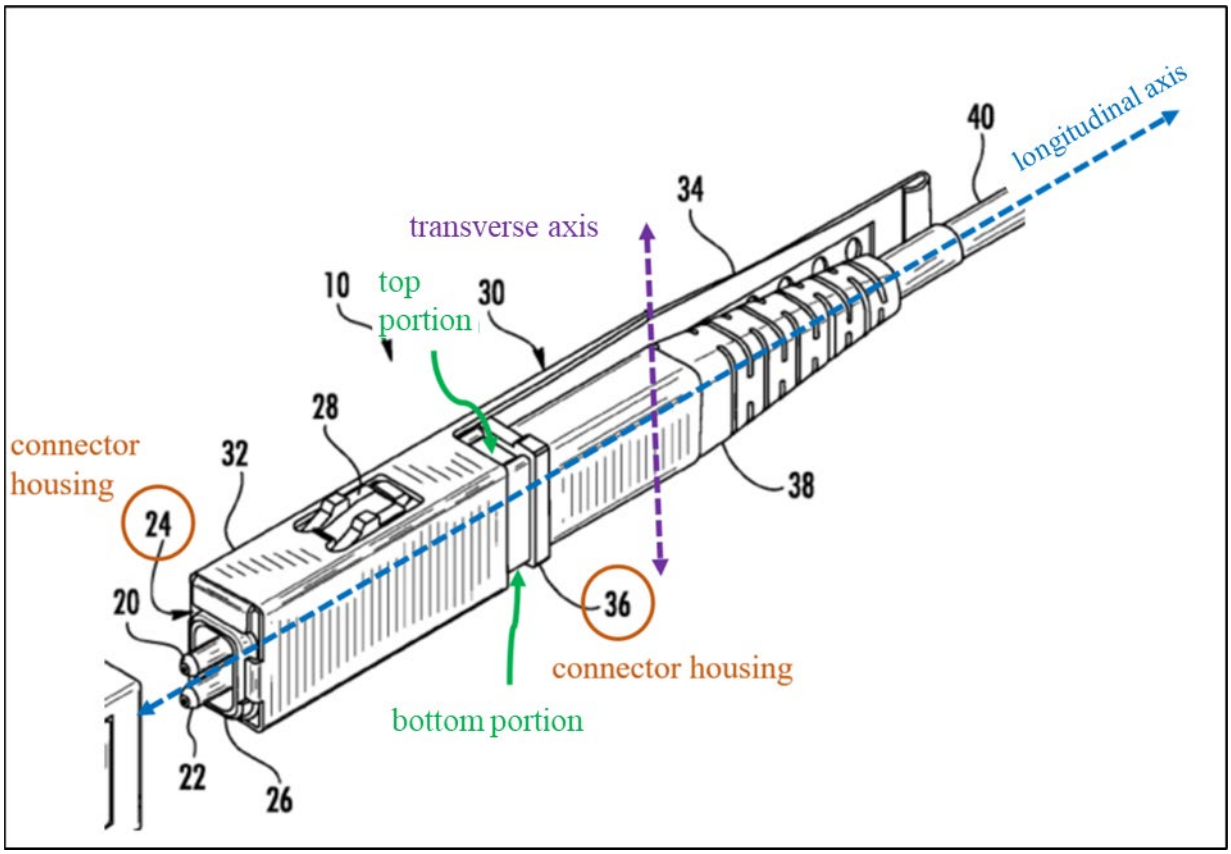

EX1004, FIG. 1 (annotated, excerpt).

130. Lee explains and illustrates that a pushing feature 142 is part of an edge defining a front end of the opening 54 defined in the front end portion of the elongate arm (handle 30) and that the pushing feature 142 is included in the front portion of the elongate arm. *See* EX1004, ¶¶30, 32, 43, 47-48, FIGS. 1-5. The rounded surface 144 of the pushing feature 142 is such an edge. *See* EX1004, ¶¶30, 32, 43, 47-48, FIGS. 1-5.

131. The pushing feature 142 including the rounded surface 144 is provided to be opposite the upper surface of the ramp 124 of the latch arm 28

because the pushing feature 142 contacts the upper surface of the ramp 124 of the latch arm 28 to actuate the latch arm 28 when the handle is pulled rearwardly. *See, e.g.*, EX1004, ¶47 ("the rounded surface 144 contacts and slides along the ramp 124 to cause the latch arm 28 to flex toward the inner connector body 24").

132. I have annotated Lee Figures 3 and 5 to show the edge and upper surface of the latch arm 28, but these features may also be seen in Figures 1, 2, and 4.

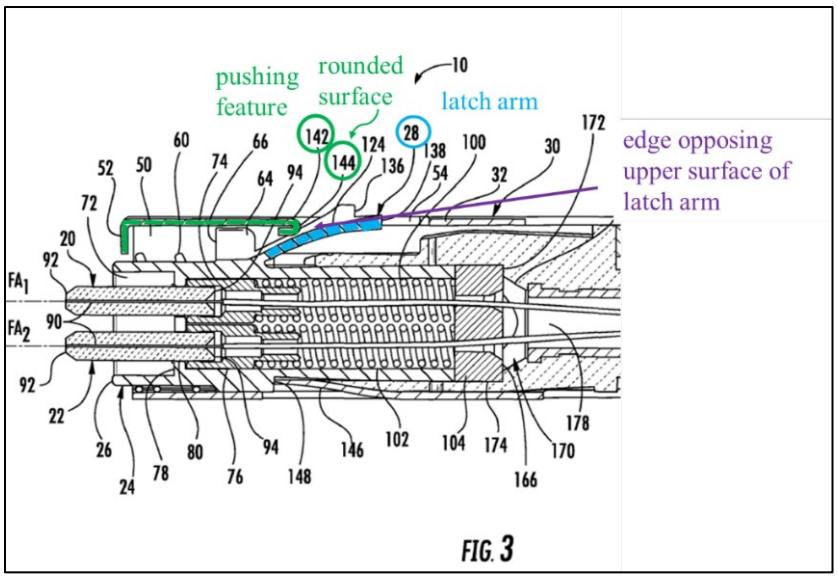

EX1004, FIG. 3 (annotated, excerpt).

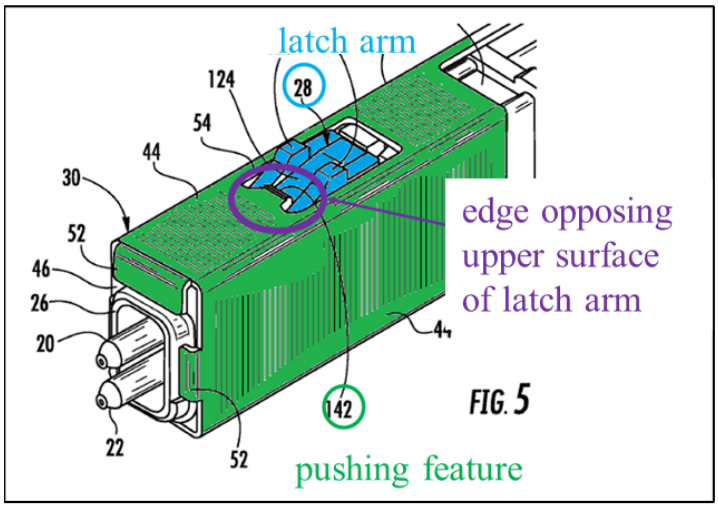

EX1004, FIG. 5 (annotated, excerpt).

133. Lee details how the latch arm 28 is actuated by pulling the handle 30 rearwardly, which I have explained below. *See* Section IX.B.6 (element [1.5]). This illustrates that Lee's pushing feature 142 and rounded surface 144 slide longitudinally along the upper surface of the latch arm 28 (*i.e.*, along the ramp 124) to depress the latch arm 28 when the handle 30 is pulled rearwardly with respect to the connector housing (the inner and outer connector bodies 24, 36). *See also, e.g.,* EX1004, ¶47 ("When the handle 30 is moved rearwardly relative to the inner connector body 24, the rounded surface 144 contacts and slides along the ramp 124 to cause the latch arm 28 to flex toward the inner connector body 24.").

3. How to Combine

134. I believe that a POSITA would have found it obvious to modify Scherer's connector to include two ferrules along the transverse axis of Scherer's connector in the same manner as Lee's ferrules 20, 22. Further, I believe that a

POSITA would have found it obvious to modify Scherer's lever 360a and extender 330d such that, when the extender 330d is pulled rearwardly along the longitudinal axis with respect to the connector housing, the edge defining a front end of the opening defined in the front end portion of the extender 330d slides longitudinally along the upper surface of the lever 360a to depress the lever 360a.

4. Why to Combine and Expectation of Success

135. A POSITA would have recognized that Scherer and Lee both provide interrelated teachings and are in the same field of endeavor, and would therefore expected Lee's teachings to be applicable to Scherer's connector. Similarly to Scherer, Lee discusses "the demand for high bandwidth tends to drive a need for high-density interconnects…By increasing the number of optical connections, more data can be transmitted in the given space," but that in high density applications "[t]he fiber optic connectors often become more difficult to handle and less robust as components are made smaller." EX1004, ¶4. Lee discloses that its specific connector design "is designed to have a small profile and thereby enable high-density interconnects. As a result, the connector 10 is particularly suitable for data centers and other environments where many connections are desired in small spaces." EX1004, ¶29. Lee thus solves some of the same problems as Scherer in a similar way, *i.e.*, facilitating multiple connections from a single optical fiber cable in a high density environment with a connector that has a latch

and a handle configured so that pulling the handle depresses the latch and releases the connector. EX1004, ¶¶4, 29, 65. Additionally, connector density is a well-known driver of fiber optic design and is increasingly one of the main design factors when creating a new connector. Thus, a POSITA would have been motivated to modify a connector like that shown in Scherer's Figure 14 with a higher density connector design, like Lee's.

136. A POSITA would also have found the modification to include two ferules spaced apart along the transverse axis obvious because it would merely amount to finding constructional details in Lee to implement a variation on the multiple-ended connections Scherer discloses. Scherer depicts transmission lines 52a extending through connector hoods 310a, 310b, 310c to protrude from distal ends thereof, while the line 52a is omitted from Figure 14 for clarity. EX1003, ¶¶50, 51, 54, FIGS. 10-14. In each of the embodiments of cables 300, 300a, 300b, 300c, the transmission line 52a has two distal ends. EX1003, ¶¶50-53.

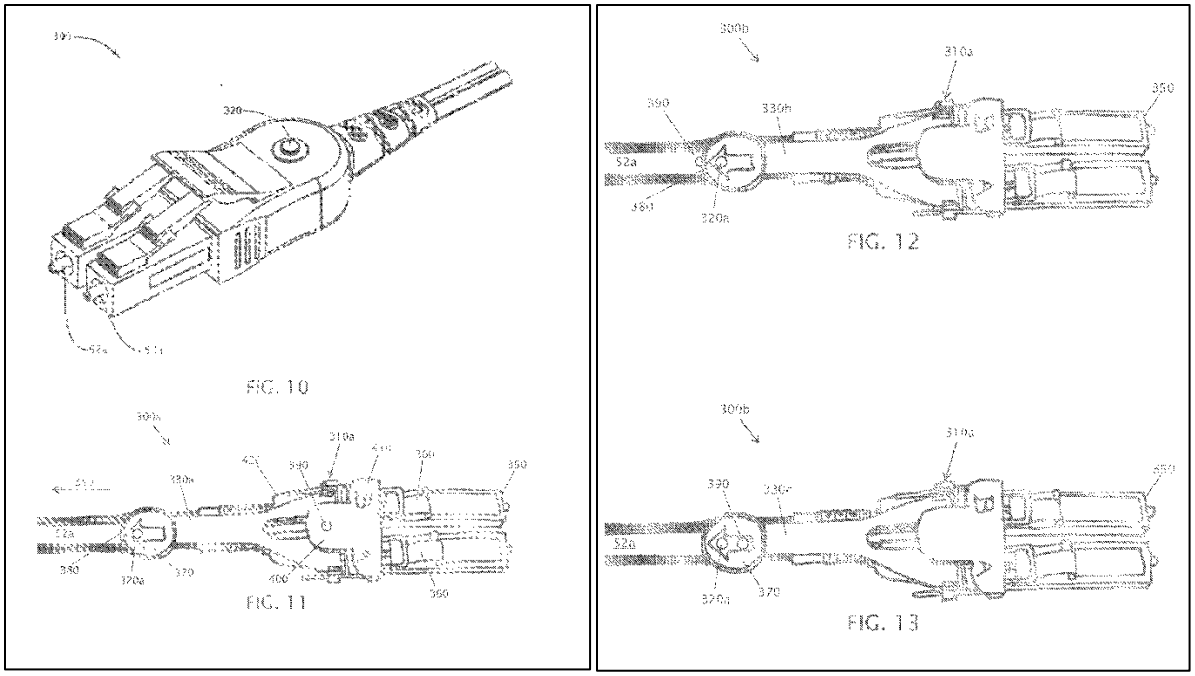

EX1003, FIGS. 11-13.

137. Thus, a POSITA would have understood Scherer's statement that "[c]able 300d is similar to cable 300c with the primary exception that cable 300d includes only a single fiber optic cable" (EX1003, ¶54) to mean that the connector depicted in Figure 14 and described with respect thereto would be suitable for making multiple connections from a single optical fiber transmission line 52a, as shown in Figures 10-13. Furthermore, Scherer explicitly suggests the use of different fiber optic connector configurations, which a POSITA would have understood includes different connector orientations. Scherer explains that its "cable tracer technologies and techniques can also be included in fiber optic cables," and relevant "[e]xamples of connectors for optical-fiber cables include single-fiber (e.g., LC) connectors, multi-fiber (e.g., MPO and/or MTP) connectors,

and/or any other optical-fiber connectors (e.g., SC, ST, and the like)." EX1003, ¶50.

138. Lee, meanwhile, discloses a double ended connection with two ferrules spaced apart along a transverse axis, with the latch being above the connector housing along the transverse axis. *See* Section IX.A.2. Indeed, there are only a finite number of orientations in which to arrange an array of fibers. More specifically, for applications in which a row or column of fibers is desired –which is a well-known configuration because often optical systems arrange multiple fiber connections side-by-side on a circuit board or other substrate—it is obvious to select an axis perpendicular to the longitudinal axis of the fiber in which to arrange such fibers; and, the choice of whether to select, for example, the vertical or horizontal axis is arbitrary and amounts to merely choosing one of the few and finite available options. In fact, there are two realistic orientations given space constraints: the orientation shown in Scherer in which the ferrules are aligned in the plane oriented perpendicularly to the defined transverse and longitudinal axes, and the orientation shown in Lee, in which the ferrules are aligned along the defined transverse axis. There are no technical difficulties implementing either known orientation, and thus a POSITA would have found this modification to be obvious to try, especially when pursuing benefits accompanying improved connector density.

139. Scherer suggests in multiple instances that its connector technology is suitable for a variety of configurations, and Lee discloses two ferrules spaced apart along a transverse axis, with the latch being above the connector housing along the same transverse axis. Both would have prompted a POSITA to modify the connector Scherer depicts in Figure 14 to include two ferrules spaced oriented as shown in Lee and to expect the result of such a modification to be successful.

140. With respect to the modification concerning the edge sliding along the upper surface of the latch, a POSITA would have understood that the sliding edge at the front end of Lee's opening 54 employs an equivalent mechanism to the front end portion of Scherer's extender 330d that receives the lever 360a, each performing the same function of depressing a latch element when an arm is pulled rearward. Such a modification, in which the elongate release element of extender 330d has an opening with a front edge that slides longitudinally along a surface of the lever 360a, would therefore have been a simple substitution of one known element for another performing the same function, and therefore having predictable results.

141. A POSITA would also have expected the modification to be successful because it only involves basic dimensional and structural changes to incorporate well-known elements – multiple ferrules, and an elongate release element having an opening with a front edge that slides along a surface of a latch –

into Scherer's connector. These changes would have been well within the skill of a POSITA at the relevant time.

142. Therefore, a combination of the connector disclosed by Scherer with orientation of the ferrules and edge sliding along an upper surface of a latch consistent with that disclosed by Lee would be a reasonable modification requiring limited experimentation with predictable results.

143. The similarities between Scherer and Lee also demonstrate that a POSITA would have a reasonable expectation of success. Scherer and Lee therefore both relate to dual-ended connectors for fiber optic cables provided with handles that release the connectors by depressing a latch, while differing only in how the ends are positioned relative to the latch, the way that the handle is coupled to the connector, and the way that the front end of the handle moves relative to the latch. Specifically, Scherer and Lee both include a remote release that can be actuated to unlatch the connector: Scherer's "remote release tab (330a, 330b, 330c)," EX1003, ¶51, and Lee's "handle 30." EX1004, ¶65. As a result, a POSITA considering Scherer and Lee together would have expected that modifying the connector for Scherer's cable 300d, depicted in Figure 14, to accommodate two ferrules 20, 22 positioned relative to the lever 360a in the same way that Lee's ferrules 20, 22 are positioned relative to Lee's latch arm 28, as well as to cause an

edge at the front end of the extender 330d to slide along an upper surface of the lever 360a, to have predictable and satisfactory results.

144. Accordingly, it is my opinion that a POSITA would have been motivated to modify Scherer's connector hood to include multiple ferrules positioned relative to the lever as disclosed in Lee. Throughout my analysis herein, when I refer to the combination of Scherer and Lee it is the above-described particular combination to which I refer.

B. Claim 1

1. Preamble – "An optical fiber connector comprising:"

145. I understand from counsel that a preamble is assumed to be non-limiting unless certain conditions are met, such as the preamble defining structure that is used in and necessary for the claimed invention. I do not take a position on whether the preamble of any claim of the '369 Patent is limiting. Even if the preambles of the claims are limiting, the challenged claims are invalid for the reasons explained in this second declaration.

146. It is my opinion that Scherer discloses the preamble. Scherer discloses an optical fiber connector. Scherer's optical fiber connectors according to various embodiments are illustrated in FIGS. 10-14. *See, e.g.*, EX1003, ¶51-55, FIGS. 10-14. One example is shown below in Scherer's Figure 14:

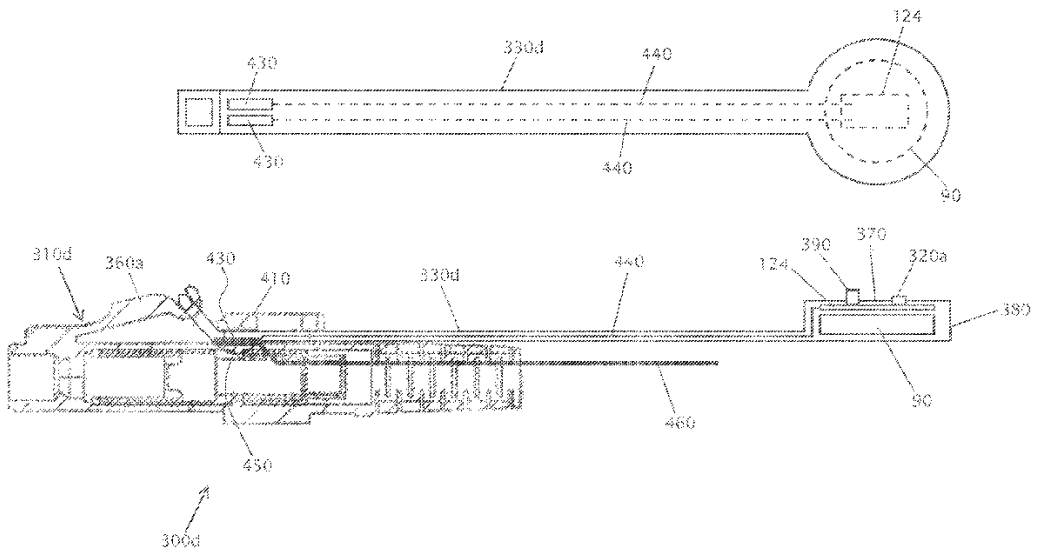

FIG. 14

EX1003, FIG. 14.

147. A POSITA would have readily understood from the relevant description that Figure 14 shows an optical fiber connector. EX1003, ¶¶51-52, 55. For at least these and the reasons below, Scherer discloses the limitations of the preamble to claim 1.

148. Specifically, Scherer explains that "FIGS. 11-14 depict various embodiments of cables 300a, 300b, 300c with fiber-optic cable connector hoods 310a, 310b, 310c" designed in a way that "improves the ease of releasing the respective connector in high-density environments," and that the embodiment including connector hood 310d shown in Figure 14 is similar to at least the embodiment of cable 300c. EX1003, ¶51.

149. The connector hood 310d and associated transmission line are thus an assembly forming an optical fiber connector for high-density environments of a type similar to the optical fiber connectors as disclosed in the '369 Patent. *See, e.g.*, EX1001, Abstract, 1:34-2:57 (explaining the need for high-density interconnects in data centers and disclosing an optical connector), FIGS. 18A-19D (illustrating example embodiments of an optical fiber connector).

150. Accordingly, it is my opinion that a POSITA would have understood Scherer discloses the preamble of claim 1.

2. Element [1.1] – "first and second optical fiber ferrules"

151. For at least the reasons below, it is my opinion that Scherer in view of Lee renders obvious the limitations of claim element 1.1.

152. Scherer states that "[c]able 300d is similar to cable 300c with the primary exception that cable 300d includes only a single fiber optic cable (which is omitted for clarity)." EX1003, ¶54. The embodiment of "cable 300c" has an optical fiber transmission line 52a that splits into two lines terminating at the forward portion of the connector, as do the other cables shown in Figures 10-13. EX1003, ¶¶50, 51, 53, FIGS. 10-13. Scherer therefore also discloses that the cable 300d has an optical fiber line that similarly terminates at the forward portion of the connector hood 310d.

153. The term "ferrule" is a well-known term of the art that refers to the structure that holds the terminal end of an optical fiber. Thus, a POSITA would have understood that a ferrule is present at the termination of each optical fiber line in Scherer.

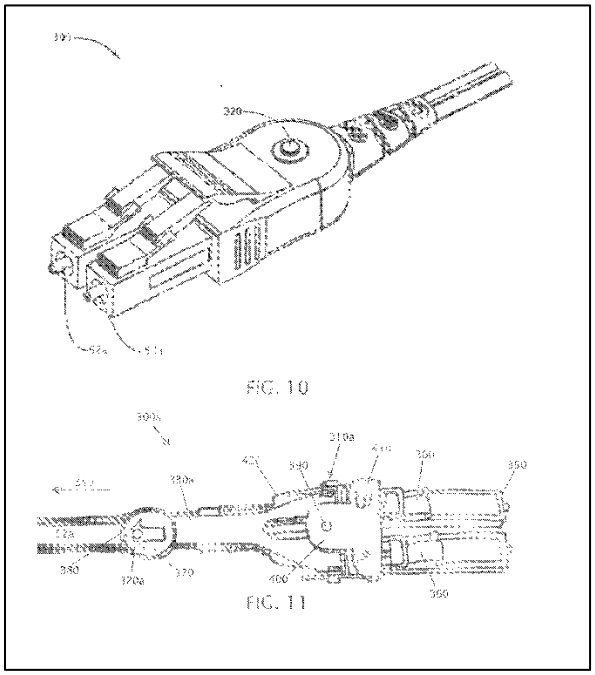

EX1003, FIGS. 10-11.

154. Patent Owner may allege that Scherer does not specifically disclose the embodiment of Figure 14 having first and second optical fiber ferrules. However, connectors with multiple optical fiber ferrules were well known in the art, and a POSITA would have been motivated to modify Scherer's connector hood 310d to be an optical fiber connector having two optical fiber ferrules as disclosed by Lee.

155. Lee discloses first and second optical fiber ferrules. *See, e.g.*, EX1004, ¶6. Lee explains in reference to Figure 1 that "the connector 10 includes first and second ferrules 20, 22, an inner connector body 24 having a front end 26 from which the first and second ferrules extend…." EX1004, ¶30. The ferrules 20, 22 can also be seen in my annotated figure below. Lee's Figures 10 and 12-14 also illustrate fiber optic connectors with first and second optical fiber ferrules.

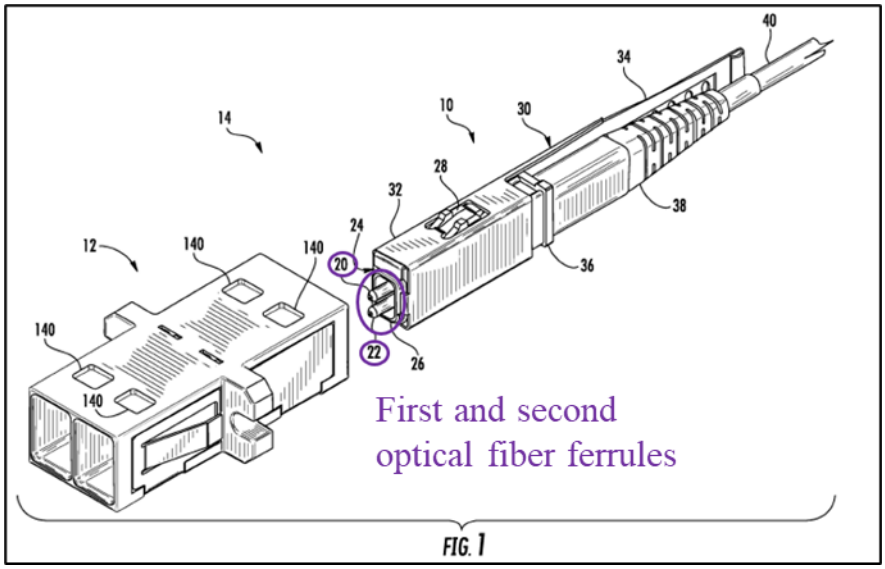

EX1004, FIG. 1 (annotated).

156. The '369 Patent describes first and second optical fiber ferrules of the same type as in Lee. *See, e.g.*, EX1001, 6:64-7:43, 12:38-46, FIGS. 3, 4, 19A-D. For example, Lee discloses two optical fiber ferrules at least in the same manner as shown in '369 patent's Figure 19A, as illustrated below.

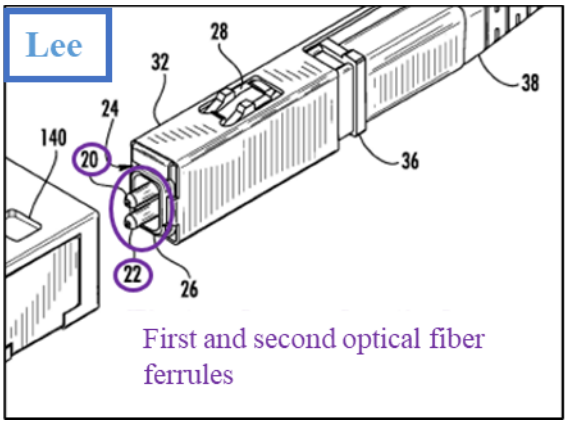

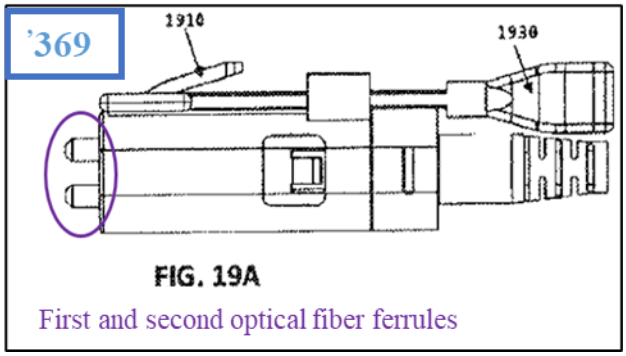

EX1004, FIG. 1 (annotated, excerpt); EX1001, FIG. 19A (annotated).

157. Accordingly, I believe that a POSITA would have understood Lee discloses element [1.1].

158. Further, to the extent Patent Owner alleges first and second optical fiber ferrules are not disclosed by Scherer I believe a POSITA would have been motivated to modify Scherer in view of Lee for reasons explained above in Section IX.A, in which it would have been obvious to include Lee's first and second optical fiber ferrules in Scherer's connector.

159. Therefore, it is my opinion that a POSITA would have understood that Scherer in view of Lee renders obvious the features of claim element [1.1].

3. Element [1.2] – "a connector housing having a front end portion and a rear end portion spaced apart along a longitudinal axis, the connector housing comprising a top portion and a bottom portion spaced apart along a transverse axis perpendicular to the longitudinal axis"

160. For at least the reasons below, it is my opinion that Scherer discloses a connector housing having a front end, rear end, top, and bottom portion along the

axes recited in this claim. *See, e.g.*, EX1003, ¶¶50, 51, 53, FIG. 14. In particular, I believe a POSITA would have understood that the portion of Scherer's "connector hood 310d" that surrounds the empty space through which the transmission line 52a would extend defines a "connector housing" as used in this claim. EX1003, ¶¶50, 51, 53, FIG. 14.

161. Scherer explains that "FIG. 14 depicts cutaway side view of a first end of a fourth embodiment 300d of the present fiber-optic cables. Cable 300d is similar to cable 300c with the primary exception that cable 300d includes only a single fiber optic cable (which is omitted for clarity)." EX1003, ¶54.

162. Figure 13 depicts the embodiment including cable 300c with unlabeled elements exposed through the front end portion, or distal end 350, of the connector hood 310. EX1003, ¶53, FIG. 13 (the appearance of numeral 300b in Figure 13 appears to be an error because Scherer states that "FIG. 13 depicts a first end of a third embodiment 300c of the present fiber optic cables"):

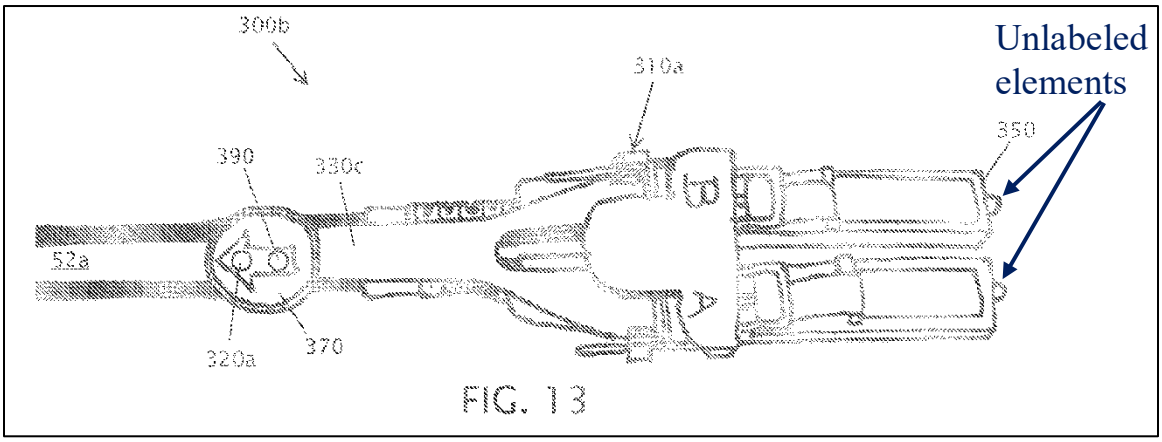

EX1003, FIG. 13 (annotated).

163. Scherer states that the embodiments of cables 300a, 300b, 300c each include "transmission line(s) 52a," also referred to as a "cable 52a." Features resembling the "unlabeled elements" indicated in Figure 13 above are labeled with numeral 52a in Figure 10 below:

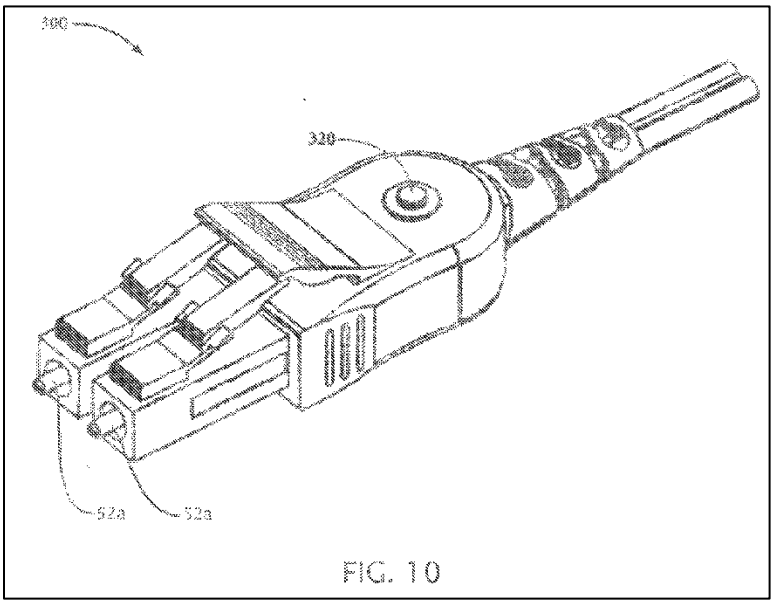

EX1003, FIG. 10.

164. A POSITA would therefore understand from context that the above annotated "unlabeled elements" in Figure 13 are each extensions of the "transmission line 52a" or "cable 52a" that Scherer describes as being present in the embodiment illustrated in Figure 13. Because Scherer states that the embodiments of FIGS. 13 and 14 are similar, and that the cable is omitted from Figure 14 for clarity, the POSITA would understand from comparing FIGS. 13 and 14 that the transmission line 52a would be located at the position shown in

annotated Figure 14 below, extending through the connector hood 310d to be exposed through the front end portion thereof:

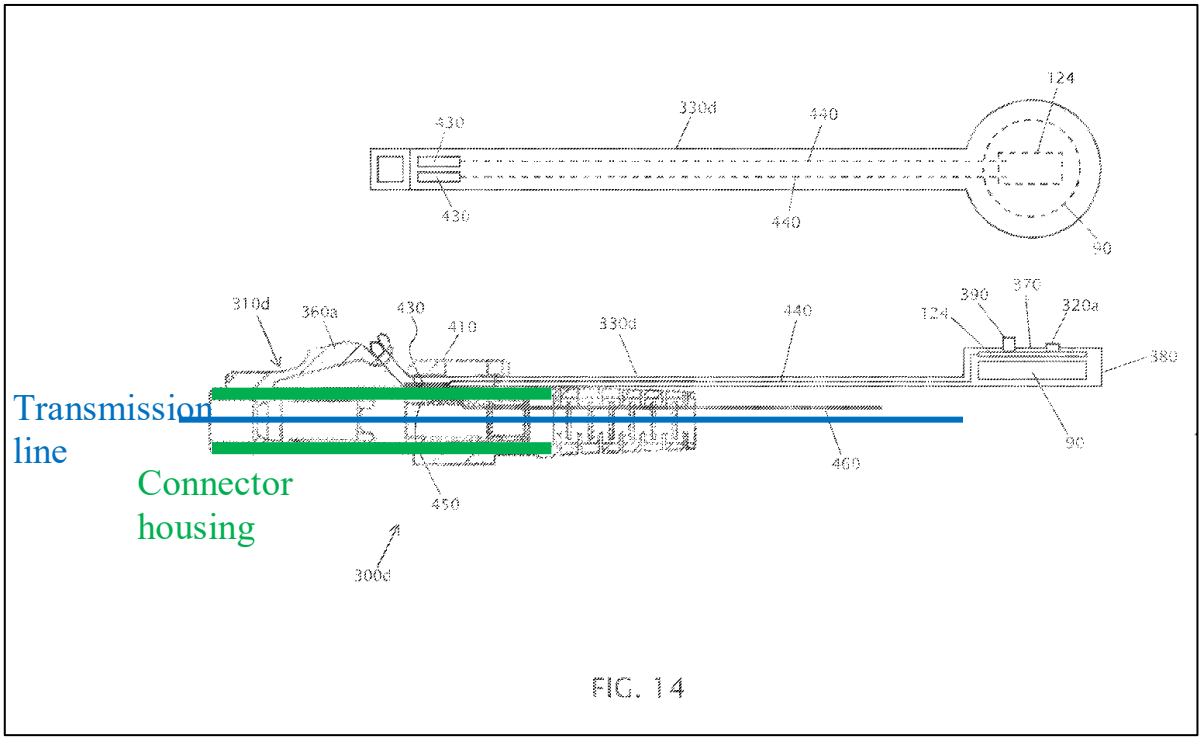

EX1003, FIG. 14 (annotated).

165. In my opinion, the portion of the connector hood 310d highlighted in green above that surrounds the space through which the transmission line would extend is a "connector housing" as recited in claim 1. The '369 Patent provides very loose descriptions of defines the term "connector housing," indicating that "[i]n some embodiments, the housing body may incorporate any or all of the components described herein," and eludes to connector housings in certain embodiments without explicitly defining the term. EX1001, 6:5-7, 12:38-49. Thus

the term "connector housing" as claimed is left to be interpreted according to its plain and ordinary meaning.

166. The above highlighted portion of the connector hood 310d is a part of an optical fiber connector that defines a structural housing for the transmission line 52a, and thereby meets the plain and ordinary meaning of "connector housing."

167. Scherer explains the meaning of "connector hood" for the purposes of the disclosure refers to a combination of a connector and a boot. EX1003, ¶35 ("a connector assembly or hood 54 comprises a connector 56 coupled to a boot 58, and the connector hood is coupled to an end of cable 52… The overall connecter (connector plus boot) will be referred to as the connector hood in this description and in the appended claims."). A POSITA therefore would have understood the element in Figure 14 that Scherer labels as a "connector hood 310d" to include both a connector and a boot.

168. Two components being coupled together to form the claimed "connector housing" is consistent with how the '369 Patent describes and claims a connector housing. *See, e.g.,* EX1001, 7:1-10 (disclosing the front body 302 is "securely fastened" to the back body 306), 8:23-40 (discussing different embodiments of front bodies connected to back bodies), 8:58-61 (same), 9:7-10 (same), 10:60-63 (same), 14:10-16 (discussing secure fastening of the front and back bodies), claims 11, 17 ("wherein the connector housing includes a front body

and a back body"), 18 (further defining the connection between the front and back bodies via a protrusion and recess).

169. The connector housing defined by connector hood 310d has a front end portion and a rear end portion spaced apart along a longitudinal axis, the connector housing comprising a top portion and a bottom portion spaced apart along a transverse axis perpendicular to the longitudinal axis as claimed.

170. Incidentally, the transverse axis indicated in Figure 14, annotated below, is the same transverse axis along which the first and second ferrules would be spaced apart following the modification in view of Lee discussed above with regard to element [1.1].

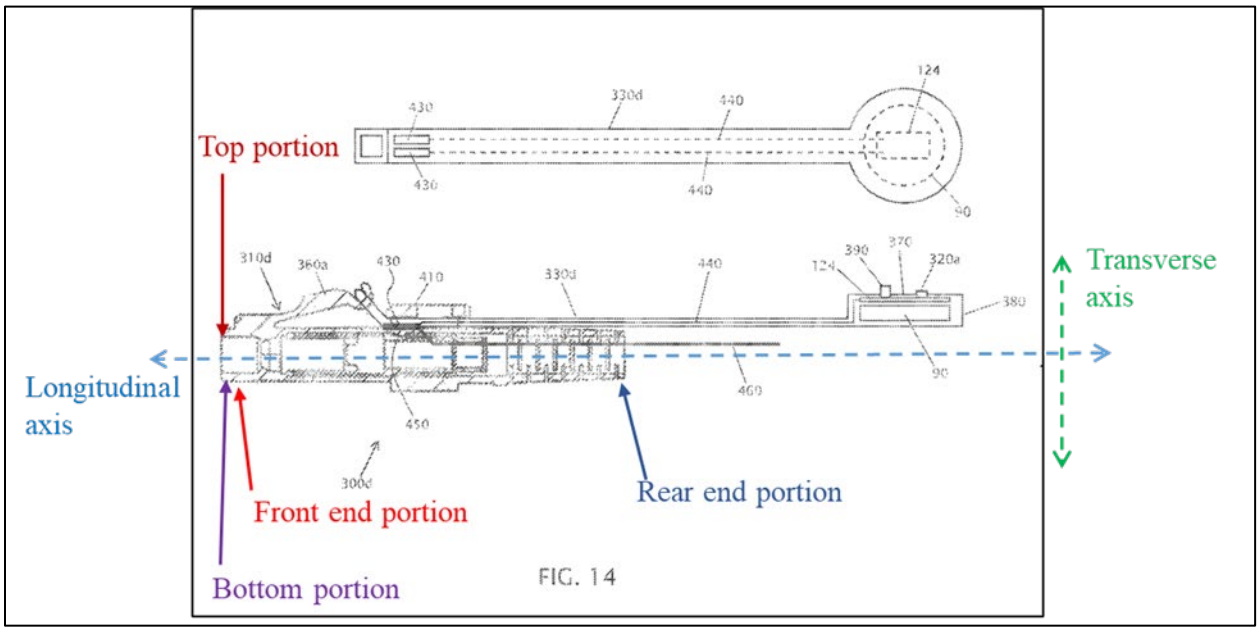

EX1003, FIG. 14 (annotated).

171. Accordingly, it is my opinion that a POSITA would have understood Scherer discloses the features of claim element [1.2].

4. Element [1.3] – "the connector housing holding the first and second optical fiber ferrules such that the first and second optical fiber ferrules are exposed through the front end portion for making an optical connection and the first and second optical fiber ferrules are spaced apart from one another along the transverse axis"

172. For at least the reasons below, it is my opinion that Scherer in view of Lee renders obvious claim element [1.3].

173. As noted above, Scherer discloses a connector hood 310d that defines a connector housing configured to hold a transmission line 52a such that the distal end of the transmission line 52a would be exposed through the front end portion of the connector housing for making an optical fiber connection. Section IX.B.3.

174. Patent Owner may argue that Scherer does not explicitly disclose the connector housing holding the first and second optical fiber ferrules such that the first and second optical fiber ferrules are exposed through the front end portion for making an optical connection and the first and second optical fiber ferrules are spaced apart from one another along the transverse axis.

175. In my opinion, Lee discloses a connector housing holding the first and second optical fiber ferrules such that the ferrules are exposed through the front end portion for making an optical connection and further that the first and second optical fiber ferrules are spaced apart from one another along the transverse axis,

wherein a top portion and a bottom portion of a connector housing are spaced apart along the transverse axis, as recited in this claim. *See, e.g.*, EX1004, FIGS. 1-3, 5.

176. For example, I believe a POSITA would have understood Figures 3 and 5 of Lee to illustrate the connector housing, which includes an inner connector body 24 and outer connector body 36, holding the first and second optical fiber ferrules and that the first and second optical fiber ferrules are exposed through the front end portion.

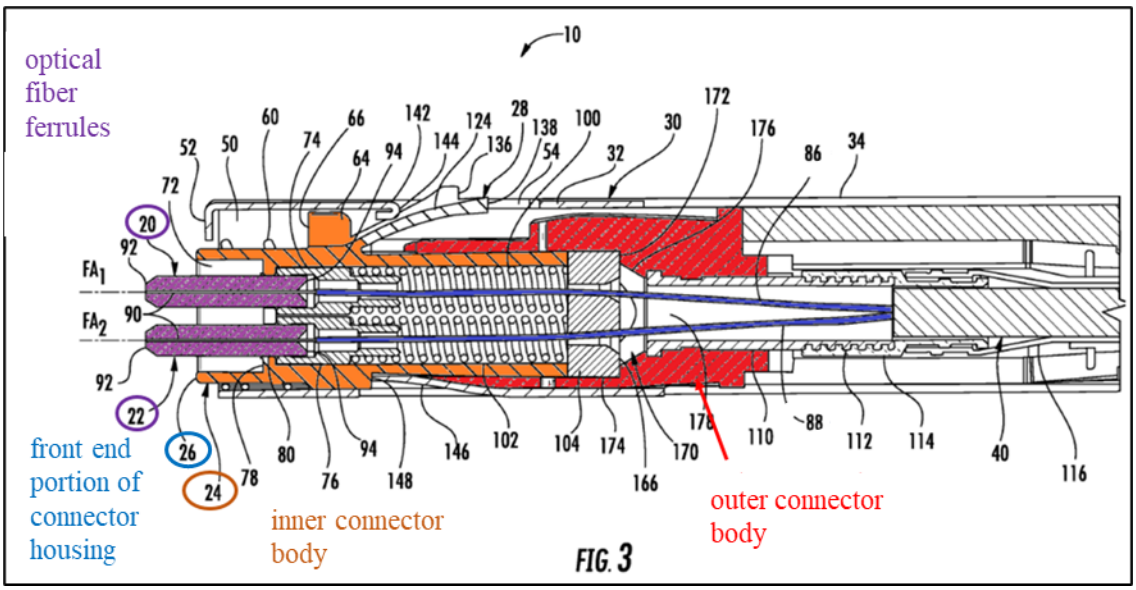

EX1004, FIG. 3 (annotated).

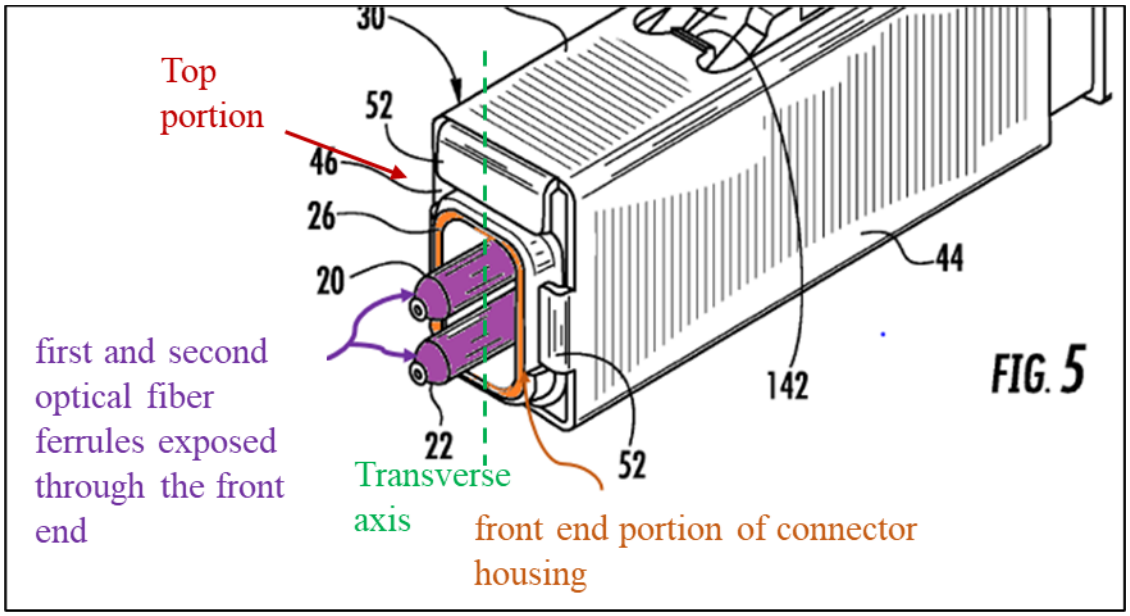

EX1004, FIG. 5 (annotated, excerpt).

177. Lee further describes that the ferrules are housed in the connector housing and are exposed through the front end portion 26. *See, e.g.*, EX1004, ¶¶30 ("the connector 10 includes first and second ferrules 20, 22, an inner connector body 24 having a front end 26 from which the first and second ferrules extend"), 35 (describing the first and second ferrule holders 74, 76 and internal wall 78 that hold the first and second ferrules 20, 22 within the inner connector body 24 as can be seen in Figure 3), 37-38 (explaining the spring housing arrangements of the connector 10), 54-58 (explaining the assembly of the connector 10 and the sub-assemblies that include the ferrules 20, 22). Lee explains that in this arrangement "[t]he first and second ferrules 20, 22 extend beyond the front end 62 of the inner connector body 24." EX1004, ¶35.

178. In my opinion, a POSITA would have understood the purpose of Lee exposing the first and second ferrules 20, 22 beyond the front end of the connector 10 is "for making an optical connection" as recited in this claim element. *See* EX1004, FIGS. 1, 3, 5. A POSITA would have understood that the connectors 10 in Lee's disclosed fiber optic connector system 14 are purposefully designed to be inserted into the adapter 12 to "mak[e] an optical connection" with another connector 10 inserted on the opposite side.

179. Additionally, Lee explains that the "connectors are typically provided on the ends of the cables to conveniently provide these connections [for data transmission]." EX1004, ¶3. Lee goes on to explain "[t]he connectors are designed to be received in ports that align the optical fiber(s) carried by connectors with the optical fiber(s) of <u>other connectors or with equipment (e.g., transceivers)</u> so that data can be transmitted between the components." EX1004, ¶3 (emphasis added because these are the components to which the ferrules make the optical connection).

180. A POSITA would understand that it is the exposed ferrules 20, 22 of Lee's disclosure that are making the optical connection described here (*i.e.*, to optical ferrules of other connectors or the optical connection to other equipment such as a transceiver). Indeed, a POSITA would know this is the very purpose of these types of optical connectors and adapters.

181. Lee also describes how the ferrules 20, 22 make an optical connection. EX1004, ¶62 (sleeves are "used to align the first and second ferrules 20, 22 of the connector 10 with similarly-shaped ferrules of a mating component (e.g., another connector)"); *see also* EX1004, ¶¶62-70, FIGS. 9-14 (describing and illustrating various configurations of adapters and transceivers for forming fiber optic connections).

182. Lee discloses "the first and second optical fiber ferrules are spaced apart from one another along the transverse axis" as recited by this claim element, and the transverse axis is oriented such that a top portion and bottom portion of the connector housing are spaced apart along the transverse axis as recited in element [1.3].

183. This can be seen, for example, in any of FIGS. 1-3 and 5 of Lee. EX1004, FIGS. 1-3, 5; *see also* EX1004, ¶36 (describing how Lee's ferrules are parallel to one another and spaced apart to define a ferrule plane).

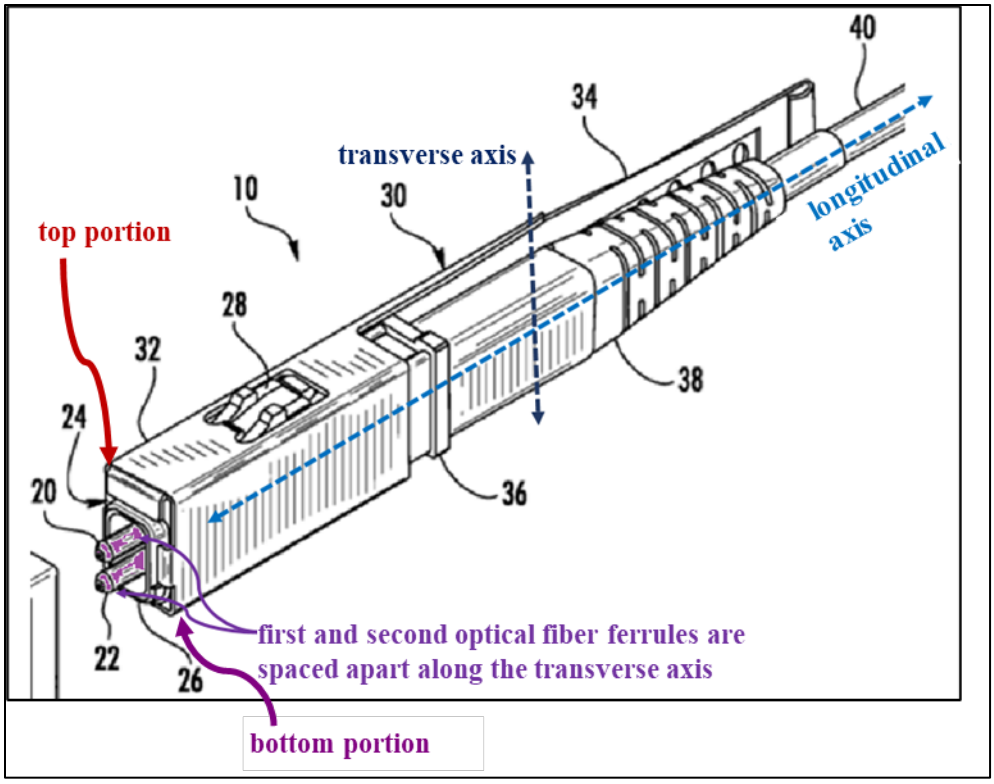

EX1004, FIG. 1 (annotated, excerpt).

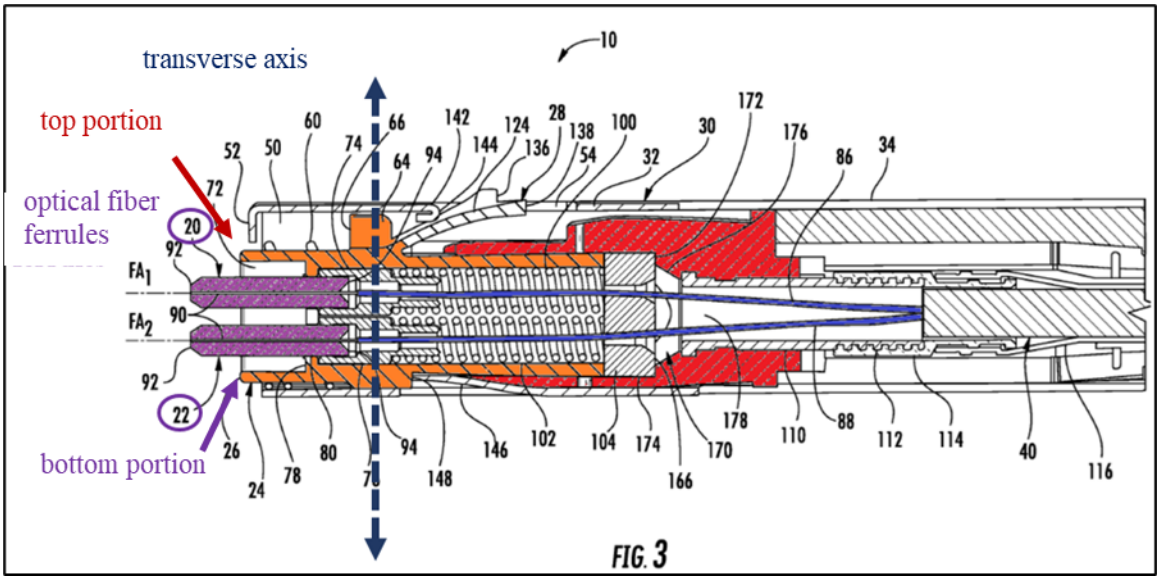

EX1004, FIG. 3 (annotated).

184. Lee discloses two optical fiber ferrules that are exposed through the front end portion of the connector housing and are spaced apart from one another

in the transverse direction at least in the same manner that the ’369 Patent does, as shown below.

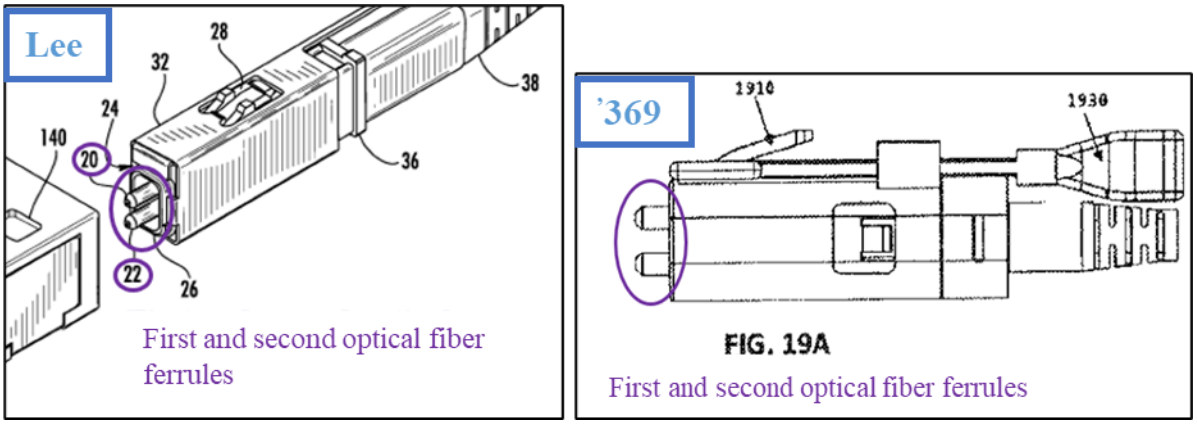

EX1004, FIG. 1 (annotated, excerpt); EX1001, FIG. 19A (annotated).

185. Accordingly, I believe a POSITA would have been motivated to modify Scherer in view of Lee for reasons explained above in Section IX.A, in which it would have been obvious to include Lee’s first and second optical fiber ferrules in Scherer’s connector.

186. Therefore, it is my opinion that a POSITA would have understood Scherer in view of Lee renders obvious the features of claim element [1.3].

5. Element [1.4] – “a depressible latch above the top portion of the connector housing; and”

187. For at least the reasons below, it is my opinion that Scherer renders obvious the limitations of claim element [1.4].

188. In my opinion, Scherer discloses a depressible latch above the top portion of the connector housing. Scherer discloses a lever 360a that is configured to engage a mating connector or jack to resist removal of the connector hood and to

release the connector hood when depressed toward the transmission line. EX1003, ¶¶5, 10, 51, 54. In particular, Scherer explains that "connector hood 310d includes extender 300d that is configured to be removably coupled to connector body 400a such [*sic*] that extender 300d can slide relative to connector body 400a to depress or compress lever 360a." EX1003, ¶54. Scherer thus explicitly states that lever 360a can be depressed.

189. Further, Scherer explains with regard to other embodiments that the role of a lever is "to engage the mating connector or jack to resist removal of the distal end" of a connector. EX1003, ¶¶5, 10.

190. Moreover, with reference to the related embodiments of optical fiber connectors in Figures 11-13, Scherer explains that the remote release tabs 330a, 330b, 330c "improve[] the ease of releasing the respective connector in high-density environments because the extender or remote release tab can simply be pulled by a user… to laterally compress the lever(s) (360)," which is consistent with the role of the lever 360a being to act as a latch that resists removal of the connector from a mating connector or jack. EX1003, ¶51.

191. I believe a POSITA would have understood from the disclosures of Scherer and the '369 Patent that the lever 360a is a "depressible latch" as recited in this claim.

192. A POSITA would also have understood that Figure 14 of Scherer shows the lever 360a is "above the top portion of the connector housing" as recited in this element. The lever 360a is readily seen as extending above the top portion of the connector housing (*i.e.*, the connector hood 310d):

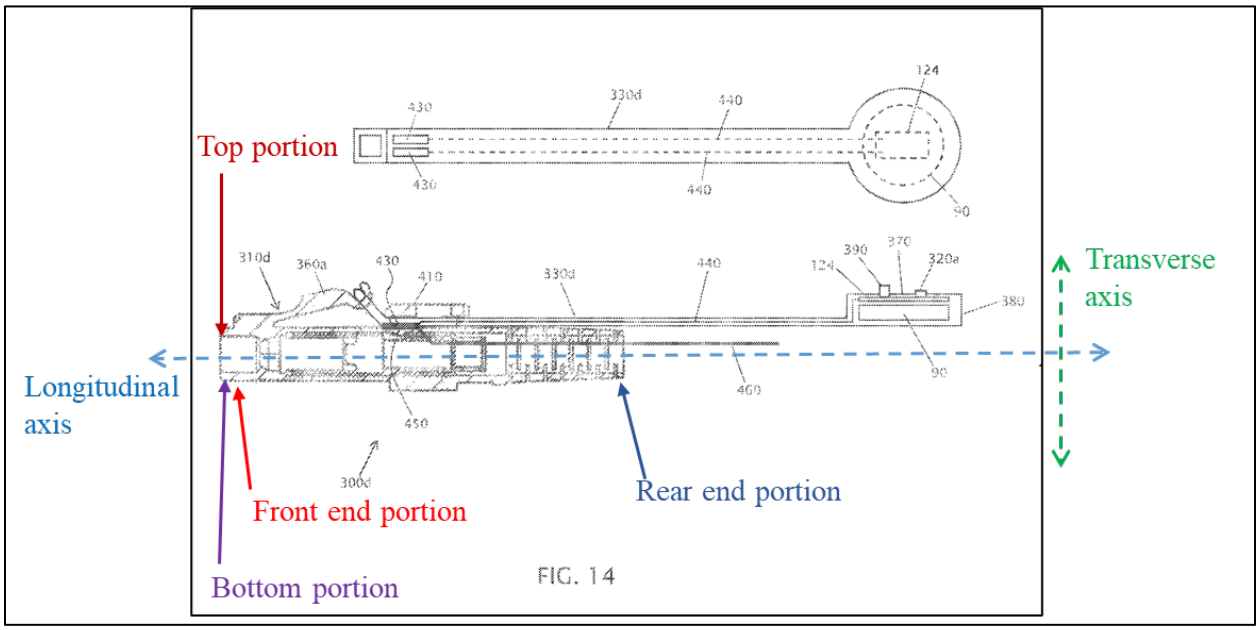

EX1003, FIG. 14 (annotated).

193. Accordingly, it is my opinion that a POSITA would have understood Scherer discloses claim element [1.4]. Additionally, the features disclosed by Scherer relevant to claim element [1.4] would be preserved in the modification of Scherer in view of Lee proposed above with regard to element [1.3]. *See* Sections IX.A, IX.B.4.

6. Element [1.5] – "an elongate arm connected to the connector housing above the top portion and configured to be pulled to actuate the depressible latch;"

194. For at least the reasons below, it is my opinion that Scherer in view of Lee renders obvious claim element [1.5]. A POSITA would have understood Scherer discloses an elongate arm connected to the connector housing above the top portion and configured to be pulled to actuate the depressible latch. *See* EX1003, ¶54, FIG. 14.

195. In particular, the tab or extender 330d shown in Figure 14 satisfies the "elongate arm" claim element because "connector hood 310d includes extender 300d that is configured to be removably coupled to connector body 400a such [*sic*] that extender 300d can slide relative to connector body 400a to depress or compress lever 360a." EX1003, ¶54 (the usage within the same paragraph of "extender 330d" in four instances and "cable 300d" in three instances in the same paragraph suggesting that the reference to "extender 300d" in the foregoing quote is a numbering error of the element "extender 330d").

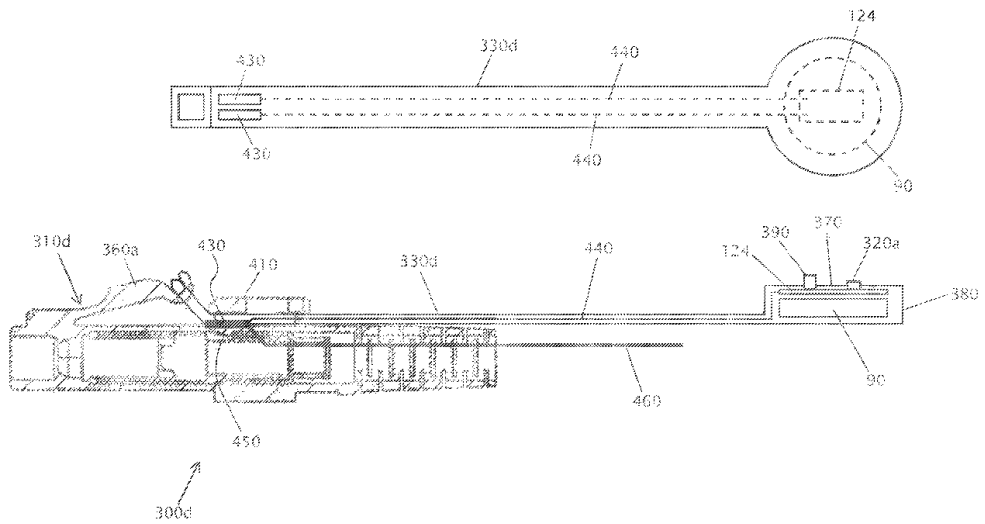

FIG. 14

EX1003, FIG. 14.

196. The ’369 Patent specification does not expressly use this claim term, which further highlights its breadth and why Scherer discloses this element. First, the ’369 Patent provides no discussion or information regarding the scope or meaning of an “elongate arm.” *See generally* EX1001. Based on that lack of discussion, I conclude that a POSITA would have understood that the claimed “elongate arm” to have its plain and ordinary meaning that would include at least Scherer’s tab or extender 330d.

197. I note that the ’369 Patent includes dependent claims directed to a push-pull tab. *See* EX1001, claims 21, 40. Both of these claims also recite “further comprising a push/pull tab extending from the rear end portion of the elongate

arm." EX1001, claims 21, 40. The term push-pull tab is discussed in the specification with respect to the embodiment of Figure 19B, which is included below. EX1001, 12:38-46 (describing that the push-pull tab 1930 is "a separable element from a connector housing" and actuates the latch 1950).

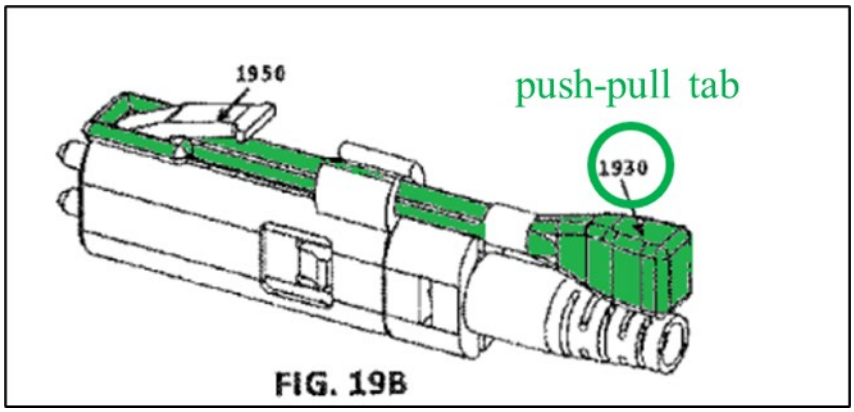

EX1001, FIG. 19B (annotated).

198. Therefore, I believe a POSITA would have understood that the term "elongate arm" as used in claim 1 does not necessarily require a "push-pull tab," but would at least encompass the kind of structure the '369 Patent discloses as having a rear end portion from which a push/pull tab extends.

199. Such a structure would include the elongate part of the element highlighted in green in the '369 Patent's Figure 19B above that extends forward from the portion specifically labeled as "push/pull tab 1930."

200. Because Scherer's extender 330d is structurally similar to that forward extending portion and the '369 Patent's specification provides no reason to believe "elongate arm" as recited in claim 1 would have anything other than its plain and

ordinary meaning, I believe Scherer's extender 330d includes an elongate arm as used in claim element [1.5].

201. As a second point, Scherer's extender 330d is connected to the top portion of the connector housing (the connector hood 310d as shown in Figure 14 above) at least in the same respect as is described in the '369 Patent itself.

202. I have carefully reviewed the '369 Patent, and I have not found any express discussion in the specification of an elongate arm "connected to" a connector housing. *See generally* EX1001.

203. To the extent that Figure 19B provides a non-limiting example of an elongate arm "connected to" the connector housing, Scherer provides the same disclosure of such a connection. That is, in the non-limiting example of Figure 19B, the '369 Patent is clear that the push-pull tab 1930 is "not integrated" with the connector housing and is instead a "separable element" from the connector housing, EX1001, 12:38-42, and further shows an example where the push-pull tab 1930 is constrained at one location in the lateral direction by an unlabeled, undescribed component, depicted below:

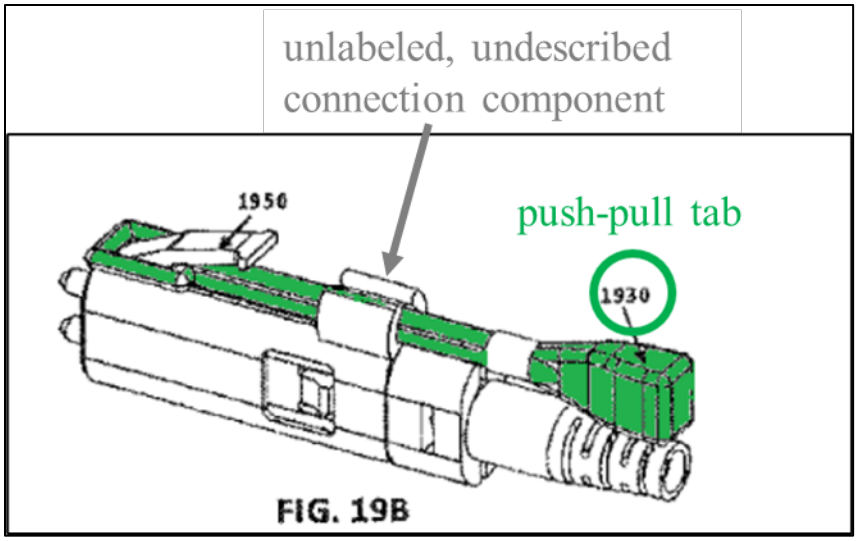

EX1001, FIG. 19B (annotated).

204. In my opinion, Scherer discloses this feature at least in the same way as shown in the '369 Patent in that "connector hood 310d includes extender 300d that is configured to be removably coupled to connector body 400a such [*sic*] that extender 300d can slide relative to connector body 400a to depress or compress lever 360a." EX1003, ¶54 (as noted previously in Section VII.A, it is clear from context that the foregoing reference to "extender 300d" is incorrectly numbered, and that the extender of this embodiment would properly be numbered "extender 330d").

205. Though Scherer does not use the numeral 400a in any figure, elsewhere in paragraph 54 Scherer refers to "movement of extender 330d relative to connector body 410," and in paragraph 51 Scherer refers to "a lateral surface 400 of connector body 410." EX1003, ¶¶51, 54.

206. From the foregoing context, despite any ambiguity concerning which of the illustrated features is referred to as "connector body 400a" in paragraph 54, a POSITA would understand that the extender 330d is connected to the part of the connector hood 310d identified above as being a "connector housing" above the top portion of that connector housing by being received between the top portion and the connector body 410 as shown in Figure 14.

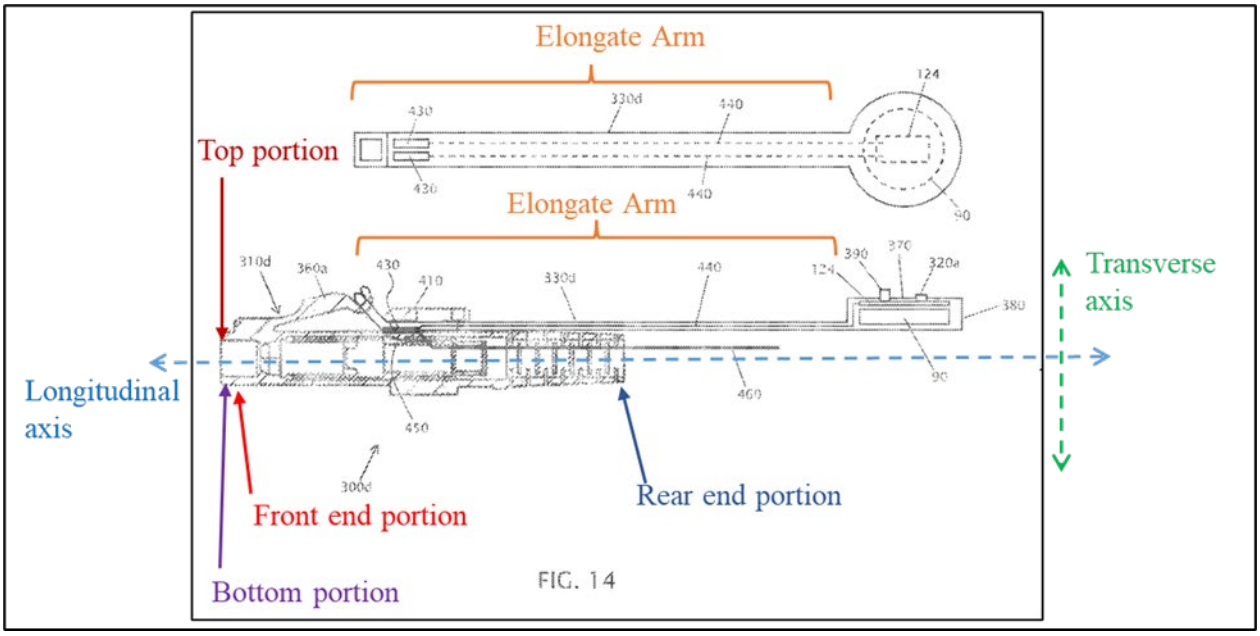

EX1003, FIG. 14 (annotated).

207. As shown above, Scherer's extender 330d is confined between the connector body 400 and the top portion of the connector housing in a manner that restricts vertical movement of the extender 330.

208. Accordingly, it is my opinion that a POSITA would have understood Scherer discloses element [1.5].

209. Additionally, the features disclosed by Scherer relevant to claim element [1.5] would be preserved in the modification of Scherer in view of Lee proposed above with regard to element [1.3]. *See* Sections IX.A, IX.B.4.

7. Element [1.6] – "wherein the connector housing comprises a guide connecting the elongate arm to the optical fiber connector."

210. For at least the reasons below, it is my opinion that Scherer renders obvious claim element [1.6]. A POSITA would have understood that Scherer discloses the connector housing includes a guide connecting the elongate arm to the optical fiber connector. EX1003, ¶¶51, 54, FIG. 14. For at least the reasons below, Scherer discloses the limitations of claim element [1.6].

211. In particular, as observed above, Scherer's extender 330d, which includes an "elongate arm" as recited in claim 1, is connected to the part of Scherer's connector hood 310d identified above as being a "connector housing" by being received between Scherer's connector body 410 and the top portion of the "connector housing."

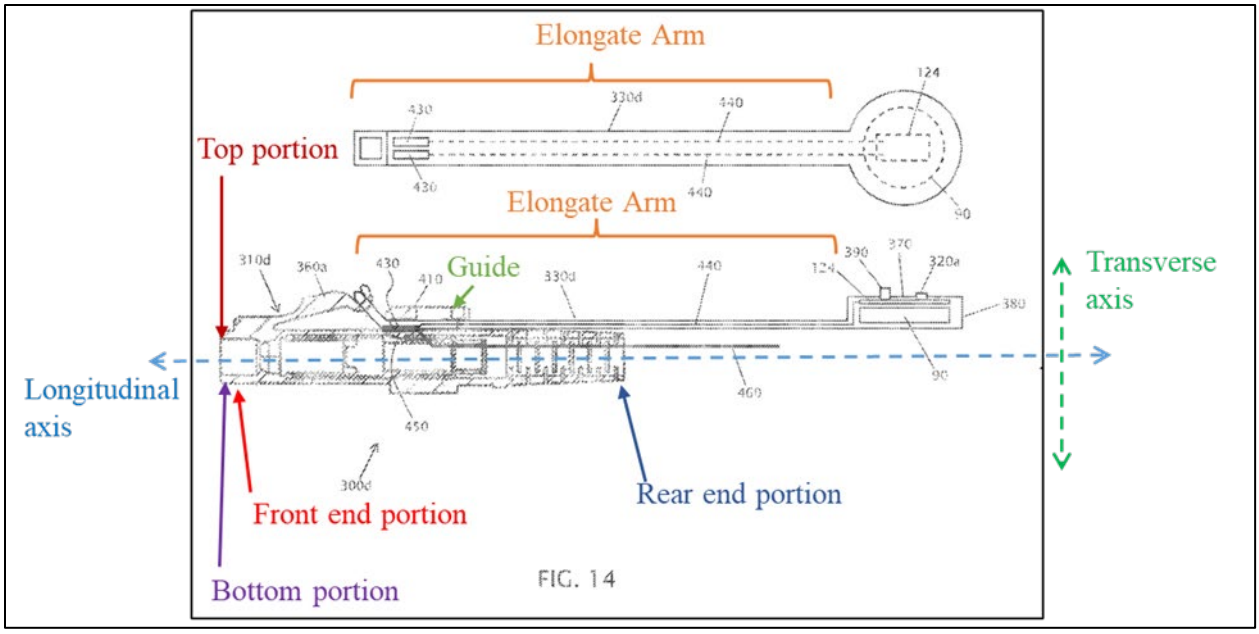

EX1003, FIG. 14 (annotated).

212. As shown in Figure 14 above, the extender 330d fills the space between the connector body 410 and the top portion of the connector housing, which would restrict vertical movement of the extender 330d while allowing the sliding motion described in paragraph 54. EX1003, ¶54, FIG. 14.

213. By restricting the extender 330d from moving vertically while allowing the extender 330d to slide in another direction, the connector body 410 and the top portion of the connector housing cooperate to guide movement of the extender 330d to facilitate use of the extender 330d to depress the lever 360a. EX1003, ¶54.

214. The space between the connector body 410 and the top portion of the connector housing in which the extender 330d is received, thereby connecting the

extender 330d to the connector housing as discussed above with regard to element [1.5], is therefore a guide that connects the extender 330d to the connector hood 310d. The connector 310d is part of the assembly depicted in Figure 14 that is identified as an "optical fiber connector" above with regard to the preamble of claim 1.

215. Accordingly, I believe that a POSITA would have understood Scherer discloses element [1.6]. Additionally, the features disclosed by Scherer relevant to claim element [1.6] would be preserved in the modification of Scherer in view of Lee proposed above with regard to element [1.3]. *See* Sections IX.A, IX.B.4. Thus, the entirety of claim 1 is rendered obvious by Scherer in view of Lee.

C. Claim 2

1. Preamble – "The optical fiber connector as set forth in claim 1, wherein"

216. Claim 2 depends on claim 1, and for at least the reasons discussed above in reference to claim 1, the combination of Scherer and Lee renders obvious claim 1. *See* Section IX.B. Additionally, for at least the reasons below, it is my opinion that the combination of Scherer and Lee also renders obvious claim 2 of the '369 Patent.

2. Element [2.1] – "the guide defines a groove extending along the longitudinal axis."

217. It is my opinion a POSITA would have understood Scherer discloses that the guide defines a groove extending along the longitudinal axis. Therefore, I

believe claim 2 would also have been obvious over Scherer and Lee as applied to claim 1.

218. As explained above with regard to elements [1.5] and [1.6] of claim 1, Scherer's extender 330d, which is an "elongate arm" as claimed, is connected to the part of Scherer's connector hood 310d that defines a "connector housing" by being received between the connector housing and a part of a connector body 410. Sections IX.B.6, IX.B.7; EX1003, ¶¶51, 54, FIG. 14.

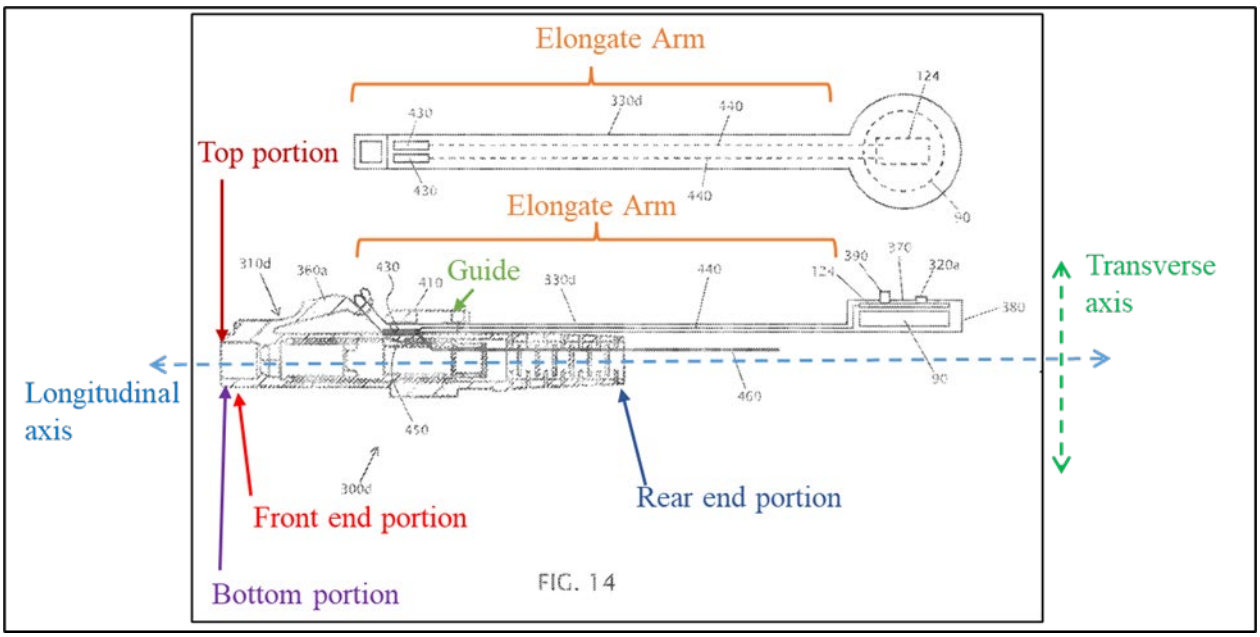

EX1003, FIG. 14 (annotated).

219. As further explained above, a POSITA would have understood from the relevant portions of Scherer's disclosure, including Figure 14, that the connector body 410 and connector housing define a guide therebetween because the close fit of the extender 330d between the connector body 410 and the top

portion of the connector housing would restrict transverse movement of the extender 330d while allowing the extender 330d to slide as described in paragraph 54. Sections IX.B.6, IX.B.7; EX1003, ¶54.

220. Other portions of Scherer's disclosure describe the space identified herein as a "guide" a "slot." EX1003, ¶8 ("In some embodiments, the connector body defines a slot, and the extender is configured to be slidably disposed in the slot."). A slot is within the plain and ordinary meaning of the word "groove," meaning the aforementioned guide defined by the optical fiber connector shown in Figure 14 includes a guide defining a groove.

221. Accordingly, I believe that Scherer discloses the additional features of claim 2, and that a POSITA would therefore have found claim 2 obvious over Scherer in view of Lee.

D. Claim 3

1. Preamble – "The optical fiber connector as set forth in claim 2, wherein"

222. Claim 3 depends on claims 1-2, and for at least the reasons discussed above in reference to claims 1-2, the combination of Scherer and Lee renders obvious claims 1-2. *See* Section IX.B; *see also* Section IX.C. Additionally, for at least the reasons below, it is my opinion that the combination of Scherer and Lee also renders obvious claim 3 of the '369 Patent.

2. Element [3.1] – "the elongate arm is slidably received in the groove."

223. As discussed above, Scherer in view of Lee renders obvious claim 2, from which claim 3 depends. In my opinion, a POSITA would have understood Scherer discloses that the guide defines a groove extending along the longitudinal axis and that the elongate arm is slidably received in the groove. For at least the reasons below, Scherer in view of Lee renders obvious claim 3 because Scherer discloses the additional limitations of claim 3.

224. As explained above with regard to claim 2, Scherer's extender 330d, which is an "elongate arm" as claimed, is connected to the part of Scherer's connector hood 310d that defines a "connector housing" by being received between the connector housing and a part of connector body 410. Section IX.C, EX1003, ¶¶51, 54, FIG. 14. As further explained above, Scherer describes the guide for the extender 330d as a "slot," and in my opinion the term slot as used here is within the plain and ordinary meaning of the word "groove." Section IX.C; EX1003, ¶8.

225. Scherer further discloses that the extender 330d is configured to slide along the "longitudinal axis" identified herein with respect to the optical fiber connector shown in Scherer's Figure 14. Scherer explains "extender 300d can slide relative to connector body 400a to depress or compress lever 360a." EX1003, ¶54 (as explained in Section 193, a POSITA would have understood that the "extender

300d" mentioned in paragraph 54 is the "extender 330d" referred to elsewhere in the same paragraph).

226. A POSITA would have understood from the configuration of the extender 330d relative to the lever 360a in Figure 14 that the aforementioned sliding of the extender 330d to depress the lever 360a would be parallel to the longitudinal axis of the connector housing because such motion would cause an edge of an opening at the front end of the extender 330d, which receives a free end of the lever 360a, to either pull the lever 360a down, toward the connector housing, or allow the lever 360a to move up, away from the connector housing.

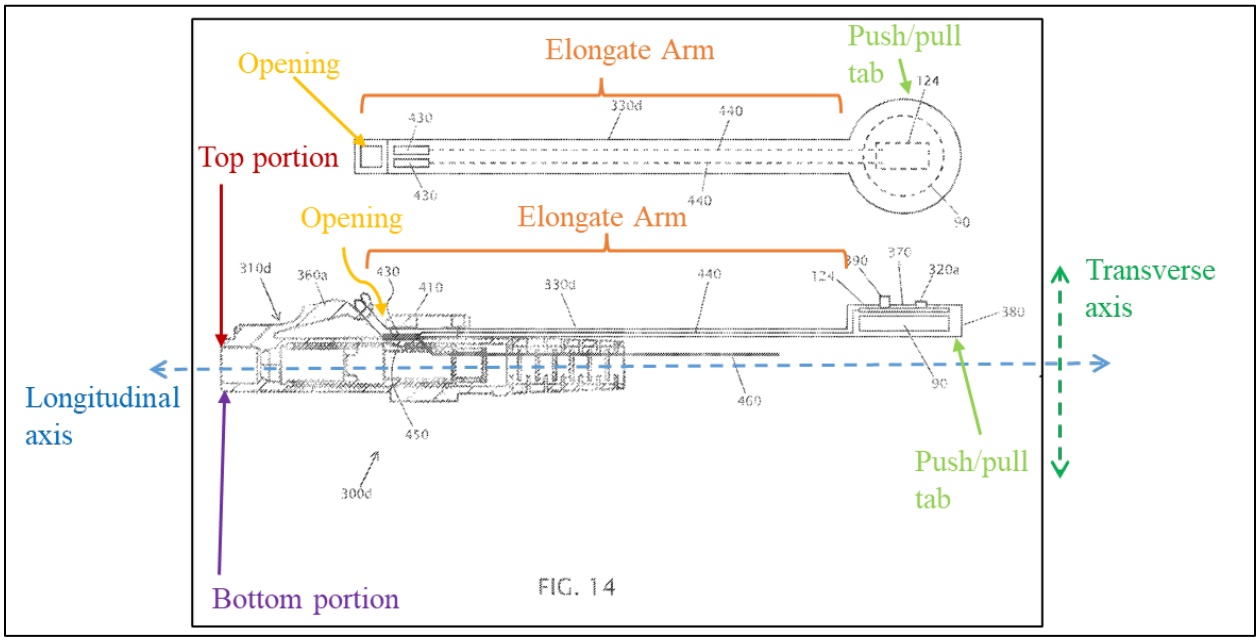

EX1003, FIG. 14 (annotated).

227. Moreover, Scherer explains that the extenders of related embodiments are pulled "away from the distal end," *i.e.*, proximally, and Figure 14 shows that

the "proximal end 380" is an extreme of the optical fiber connector assembly along the longitudinal axis. EX1003, ¶¶5 ("Some embodiments… comprise… an extender configured to be coupled to the lever and configured to be pulled longitudinally away from the distal end to draw a portion of the lever laterally toward one or more cables"), 51 ("the extender or remote release tab can simply be pulled by a user in a direction 340 away from a distal end 350 of the connector to laterally compress the lever(s) (360) of the connector toward the transmission line(s) 52a").

228. Though the "distal end" is not labeled in Scherer's Figure 14, a POSITA would have understood from context that the extender 330d is also pulled away from the distal end of the connector hood 310d, *i.e.*, proximally, and thus along the longitudinal axis.

229. In my opinion, a POSITA would have understood that Scherer discloses the features of claim 3 for at least these reasons.

230. Accordingly, I believe that Scherer discloses the additional features of claim 3, and that a POSITA would therefore have found claim 3 obvious over Scherer in view of Lee.

E. Claim 4

1. Preamble – "The optical fiber connector as set forth in claim 1, wherein"

231. Claim 4 depends on claim 1, and for at least the reasons discussed above in reference to claim 1, the combination of Scherer and Lee renders obvious claim 1. *See* Section IX.B. Additionally, for at least the reasons below, it is my opinion that the combination of Scherer and Lee also renders obvious claim 4 of the '369 Patent.

2. Element [4.1] – "the elongate arm comprises a front end portion and a rear end portion spaced apart along the longitudinal axis."

232. The phrase "end portion" does not appear anywhere in the '369 Patent outside of the claims. *See generally* EX1001. The phrase "elongate arm" does not appear outside of the claims either, with the only element referred to as an "arm" in the description being an "extended hook arm 3996" of a back body 3730 of a connector of one embodiment. EX1001, 17:13-21, FIG. 39.

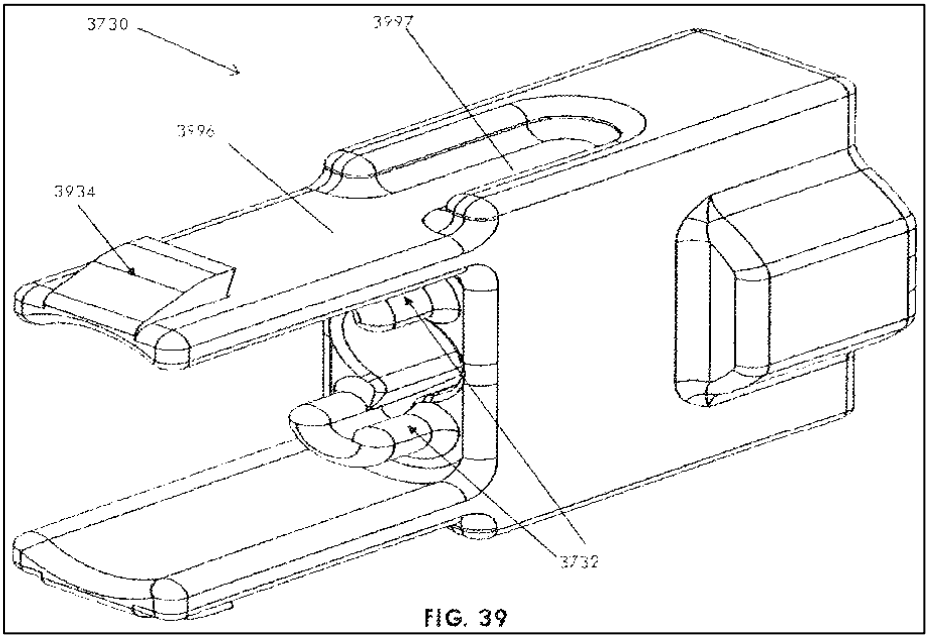

EX1001, FIG. 39.

233. The hook arm 3996 is of limited relevance to the terms used in this claim because it does not have a labeled "front end portion" or "rear end portion" and because it is generally inconsistent with the claimed features of the "elongate arm" recited in claims 1 and 4. EX1001, cls. 1, 4, 16:54-17:21. FIGS. 37-40C. The specification of the '369 Patent therefore provides no specific definition of what constitutes a "front end portion" or a "rear end portion" of an elongate arm, nor are any features of any of the illustrated examples labeled as such.

234. Further, reference to the figures shows no demarcation between front or rear end portions of any elongate element in any illustrated embodiment configured to be pulled rearwardly to depress a latch. *See*, *e.g.*, EX1001, FIGS. 19A-19D, 21B, 29A, 37, 40A-40C, 44A-44C, 53-69. Instead, the illustrated

elongate elements configured to be pulled rearwardly disclosed in the '369 Patent are generally monolithic elements having two ends with no break or clear boundary therebetween. *See*, *e.g.*, EX1001, FIGS. 19A-19D, 21B 29A, 37, 40A-40C, 44A-44C, 53-69. For those reasons, as well as the plain and ordinary meaning of the language of the claim, the "front end portion" and "rear end portion" recited in this claim can be two parts of a monolithic whole.

235. A POSITA would have understood that Scherer's elongate arm (elongate portion of the extender 330d) includes a front end portion and a rear end portion spaced apart along the longitudinal axis.

236. I believe a POSITA would have understood that Figure 14 of Scherer illustrates all of the aspects of claim 4.

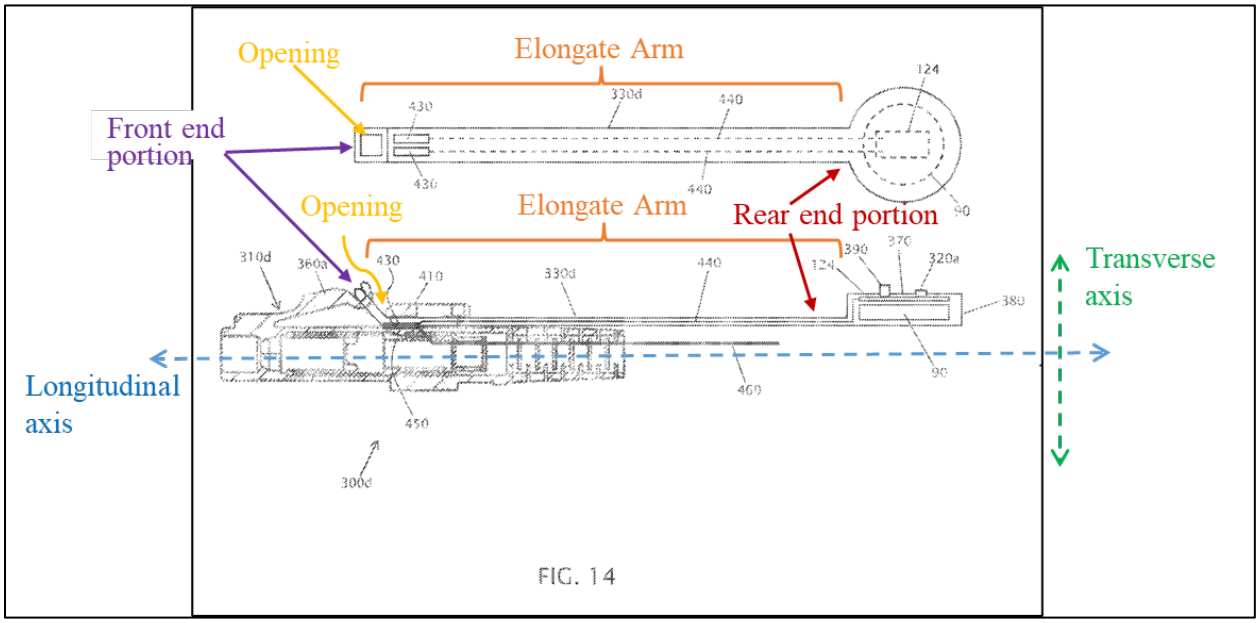

EX1003, FIG. 14 (annotated).

237. As shown in Figure 14, the front end portion of the part of the extender 330d that defines an elongate arm is spaced apart from a rear end portion of that part. EX1003, FIG. 14.

238. Accordingly, it is my opinion that Scherer discloses the additional features of claim element [4.1]. Additionally, the features disclosed by Scherer relevant to claim element [4.1] would be preserved in the modification of Scherer in view of Lee. *See* Section IX.A. It is my opinion that a POSITA would therefore have found claim 4 obvious over Scherer in view of Lee.

F. Claim 5

1. Preamble – "The optical fiber connector as set forth in claim 4, wherein"

239. Claim 5 depends on claims 1 and 4, and for at least the reasons discussed above in reference to claims 1 and 4, the combination of Scherer and Lee renders obvious claims 1 and 4. *See* Sections IX.B, IX.E. Additionally, for at least the reasons below, it is my opinion that the combination of Scherer and Lee renders obvious claim 5 of the '369 Patent.

2. Element [5.1] – "the front end portion of the elongate arm defines an opening."

240. It is my opinion a POSITA would have understood Scherer discloses the features of claim element [5.1].

241. I believe a POSITA would have understood that Figure 14 of Scherer illustrates all of the aspects of claim 5.

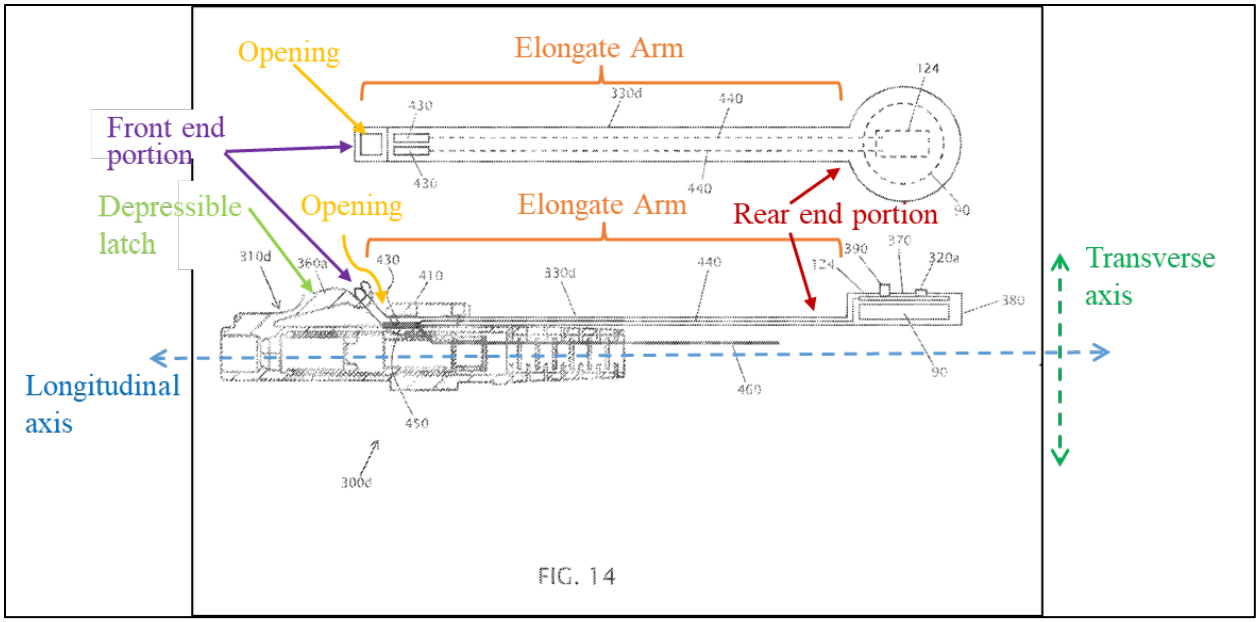

EX1003, FIG. 14 (annotated).

242. As shown in Figure 14, the front end portion of the part of the extender 330d that defines an elongate arm is spaced apart from a rear end portion of that part, and that front end portion defines an opening. EX1003, FIG. 14.

243. Accordingly, it is my opinion that Scherer discloses the additional features of claim element [5.1]. Additionally, the features disclosed by Scherer relevant to claim element [5.1] would be preserved in the modification of Scherer in view of Lee. *See* Section IX.A. It is my opinion that a POSITA would therefore have found claim 5 obvious over Scherer in view of Lee.

G. Claim 6

1. Preamble – "The optical fiber connector as set forth in claim 5, wherein"

244. Claim 6 depends on claims 1 and 4-5, and for at least the reasons discussed above in reference to claim 1 and claims 4-5, the combination of Scherer and Lee renders obvious claim 1 and claims 4-5. *See* Sections IX.B, E-F. Additionally, for at least the reasons below, it is my opinion that the combination of Scherer and Lee renders obvious claim 6 of the '369 Patent.

2. Element [6.1] – "the depressible latch is received in the opening."

245. It is my opinion a POSITA would have understood Scherer discloses the features of claim element [6.1]. As noted above with regard to claims 4 and 5, a POSITA would have understood that Scherer's elongate arm (elongate portion of the extender 330d) includes a front end portion and a rear end portion spaced apart along the longitudinal axis, and that the front end portion defines an opening. Section IX.F. Further, in my opinion, a POSITA would have understood Scherer's elongate arm (elongate portion of the extender 330d) defines an opening at the front end portion and that the depressible latch (lever 360a) is received in the opening. For at least the reasons below, Scherer in view of Lee renders obviousclaim 6 because Scherer discloses the additional limitations of claim 6.

246. I believe a POSITA would have understood that Figure 14 of Scherer illustrates all of the aspects of claim 6.

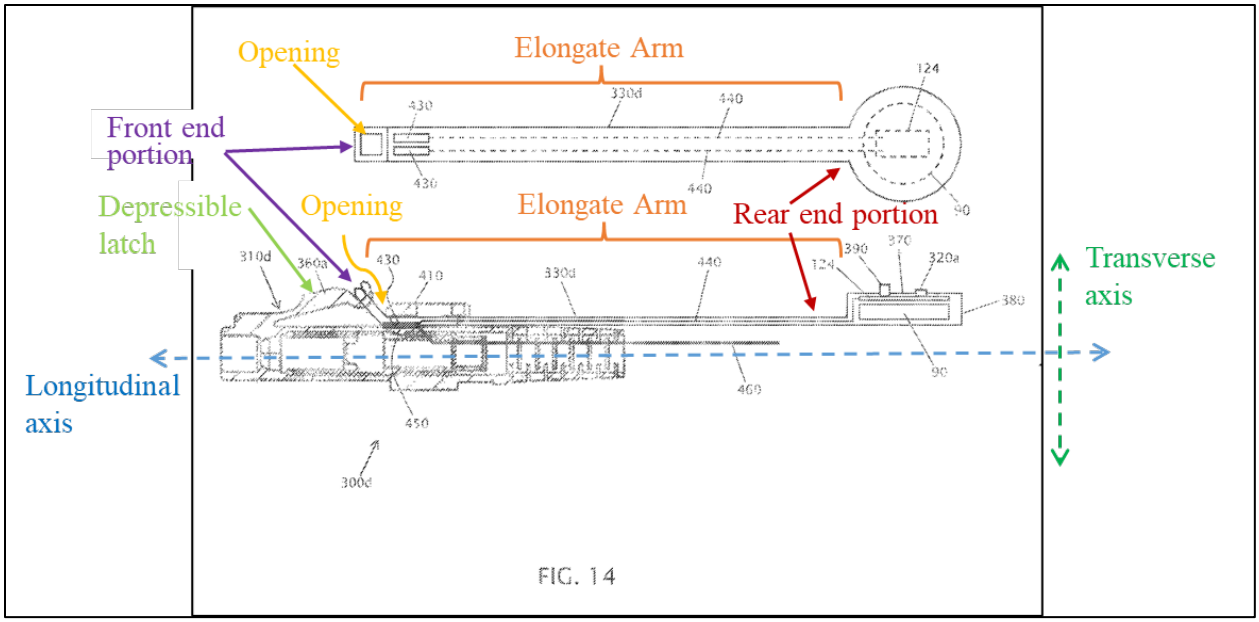

EX1003, FIG. 14 (annotated).

247. As shown in Figure 14, the front end portion of the part of the extender 330d that defines an elongate arm is spaced apart from a rear end portion of that part. EX1003, FIG. 14. That front end portion defines an opening. EX1003, FIG. 14. The free end of the lever 360a includes a hook shaped portion that extends through that opening, so the lever 360a is received in the opening. EX1003, FIG. 14.

248. Accordingly, it is my opinion that Scherer discloses the additional features of claim element [6.1]. Additionally, the features disclosed by Scherer relevant to claim element [6.1] would be preserved in the modification of Scherer in view of Lee. *See* Section IX.A. It is my opinion that a POSITA would therefore have found claim 6 obvious over Scherer in view of Lee.

H. Claim 7

1. Preamble – "The optical fiber connector as set forth in claim 6, wherein"

249. Claim 7 depends on claims 1 and 4-6, and for at least the reasons discussed above in reference to claim 1 and claims 4-6, the combination of Scherer and Lee renders obvious claim 1 and claims 4-6. *See* Sections IX.B, IX.E-G. Additionally, for at least the reasons below, it is my opinion that the combination of Scherer and Lee renders obvious claim 7 of the '369 Patent.

2. Element [7.1] – "the depressible latch has a front end portion and rear end portion spaced apart along the longitudinal axis and wherein the depressible latch extends upward along the transverse axis as the depressible latch extends along the longitudinal axis from the front end portion to the rear end portion of the depressible latch."

250. It is my opinion a POSITA would have understood Scherer discloses the features of claim element [7.1]. In my opinion, a POSITA would have understood that Scherer's latch arm (lever 360a) has a front end portion and rear end portion spaced apart along the longitudinal axis and that the latch arm extends upward along the transverse axis as the depressible latch extends along the longitudinal axis from the front end portion to the rear end portion of the depressible latch. *See, e.g.*, EX1003, FIG. 14.

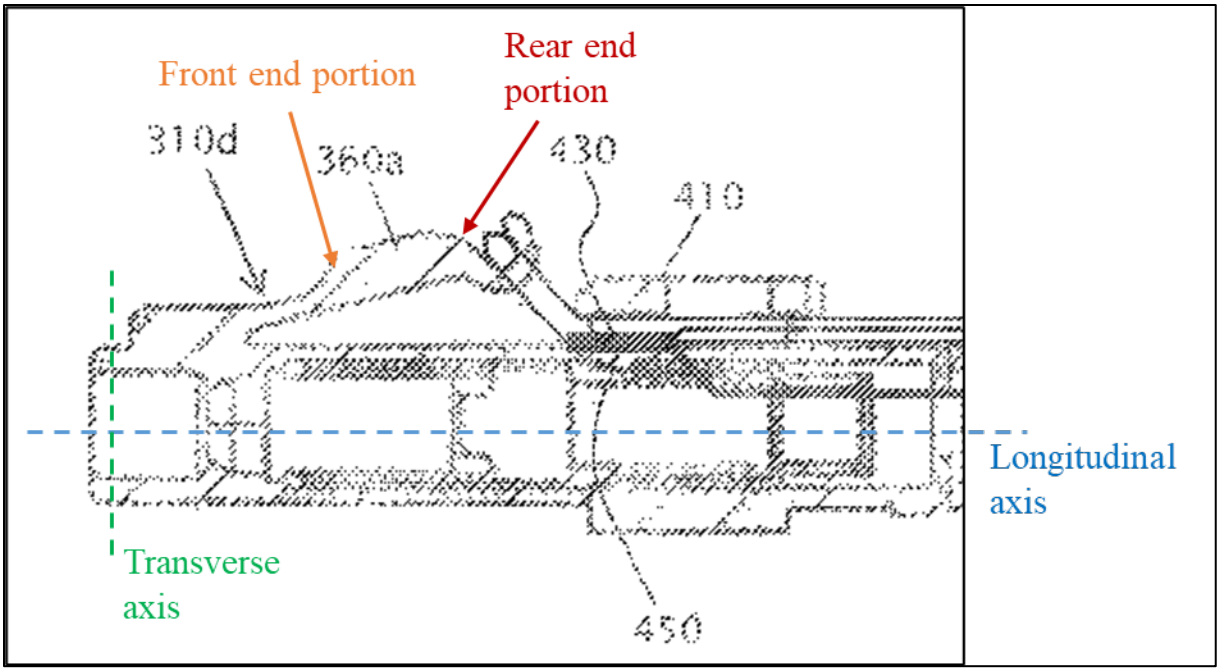

EX1003, FIG. 14 (annotated, excerpt).

251. In my opinion, a POSITA would have understood that "front portion" and "rear end portion" denote different sections (as opposed to a particular point) of the depressible latch as: (i) this would be the plain and ordinary meaning; and (ii) these terms are clearly used to refer to portions/segments of the structure (as opposed to a particular front point and end point) throughout the specification and claims of the '369 Patent. *See, e.g.,* EX1001, claims 4-5 (using "front portion" to refer to a portion of structure that includes an opening).

252. Therefore, I believe that a POSITA would have understood this claim is satisfied at least by the lever 360a extending upwards in the transverse direction from the front portion to the rear portion of the lever 360a.

253. Even if a more restrictive view of "front portion" and "rear end portion" were applied to only refer to the leading edge and trailing edge of the depressible latch, Scherer shows that this element is met as the lever 360a extends upward along the transverse axis between these edges as I have annotated above.

254. Accordingly, it is my opinion that Scherer discloses the additional features of claim element [7.1]. Additionally, the features disclosed by Scherer relevant to claim element [7.1] would be preserved in the modification of Scherer in view of Lee. *See* Section IX.A. It is my opinion that a POSITA would therefore have found claim 7 obvious over Scherer in view of Lee.

I. Claim 8

1. Preamble – "The optical fiber connector as set forth in claim 7, wherein"

255. Claim 8 depends on claims 1 and 4-7, and for at least the reasons discussed above in reference to claim 1 and claims 4-7, the combination of Scherer and Lee renders obvious claim 1 and claims 4-7. *See* Sections IX.B, IX.E-H. Additionally, for at least the reasons below, it is my opinion that the combination of Scherer and Lee renders obvious claim 8 of the '369 Patent.

2. Element [8.1] – "the rear end portion of the depressible latch is spaced apart above the top portion of the connector housing along the transverse axis."

256. It is my opinion a POSITA would have understood Scherer discloses the features of claim element [8.1]. In my opinion, a POSITA would have

understood that the rear end portion of Scherer's latch (lever 360a) is spaced apart above the top portion of the connector housing along the transverse axis. *See, e.g.*, EX1003, FIG. 14.

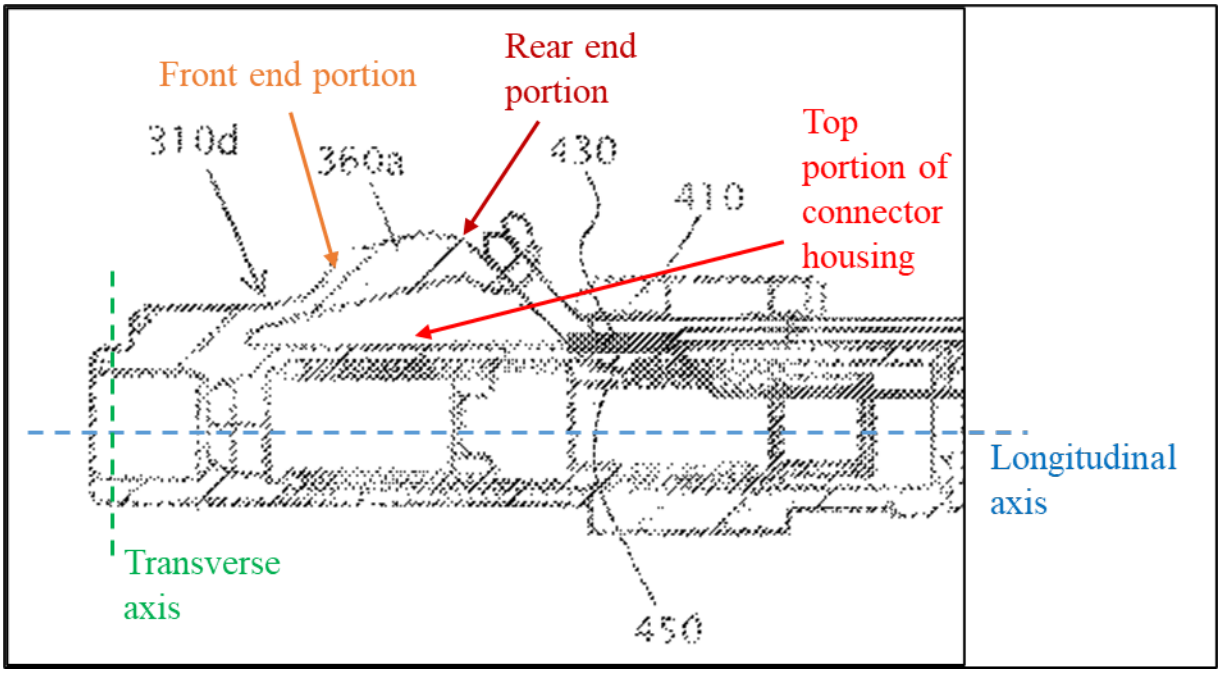

EX1003, FIG. 14 (annotated, excerpt).

257. As shown above, the rear end portion of Scherer's depressible latch (free end of lever 360a) is spaced apart from the connector housing portion of the connector hood 310d such that it is above the top portion of the connector housing.

258. Accordingly, it is my opinion that Scherer discloses the additional features of claim element [2.1]. Additionally, the features disclosed by Scherer relevant to claim element [2.1] would be preserved in the modification of Scherer in view of Lee. *See* Section IX.A. It is my opinion that a POSITA would therefore have found claim 2 obvious over Scherer in view of Lee.

J. Claim 9

1. Preamble – "The optical fiber connector as set forth in claim 8, wherein"

259. Claim 9 depends on claims 1 and 4-8, and for at least the reasons discussed above in reference to claim 1 and claims 4-8, the combination of Scherer and Lee renders obvious claim 1 and claims 4-8. *See* Sections IX.B, IX.E-I. Additionally, for at least the reasons below, it is my opinion that the combination of Scherer and Lee renders obvious claim 9 of the '369 Patent.

2. Element [9.1] – "the front end portion of the elongate arm includes an edge defining a front end of the opening."

260. It is my opinion a POSITA would have understood Scherer discloses the features of claim element [9.1]. In particular, I believe Scherer discloses that a front end portion of the elongate arm (opening defined at the front end of the elongate part of extender 330d) includes an edge defining a front of the opening. *See, e.g.*, EX1003, FIG. 14.

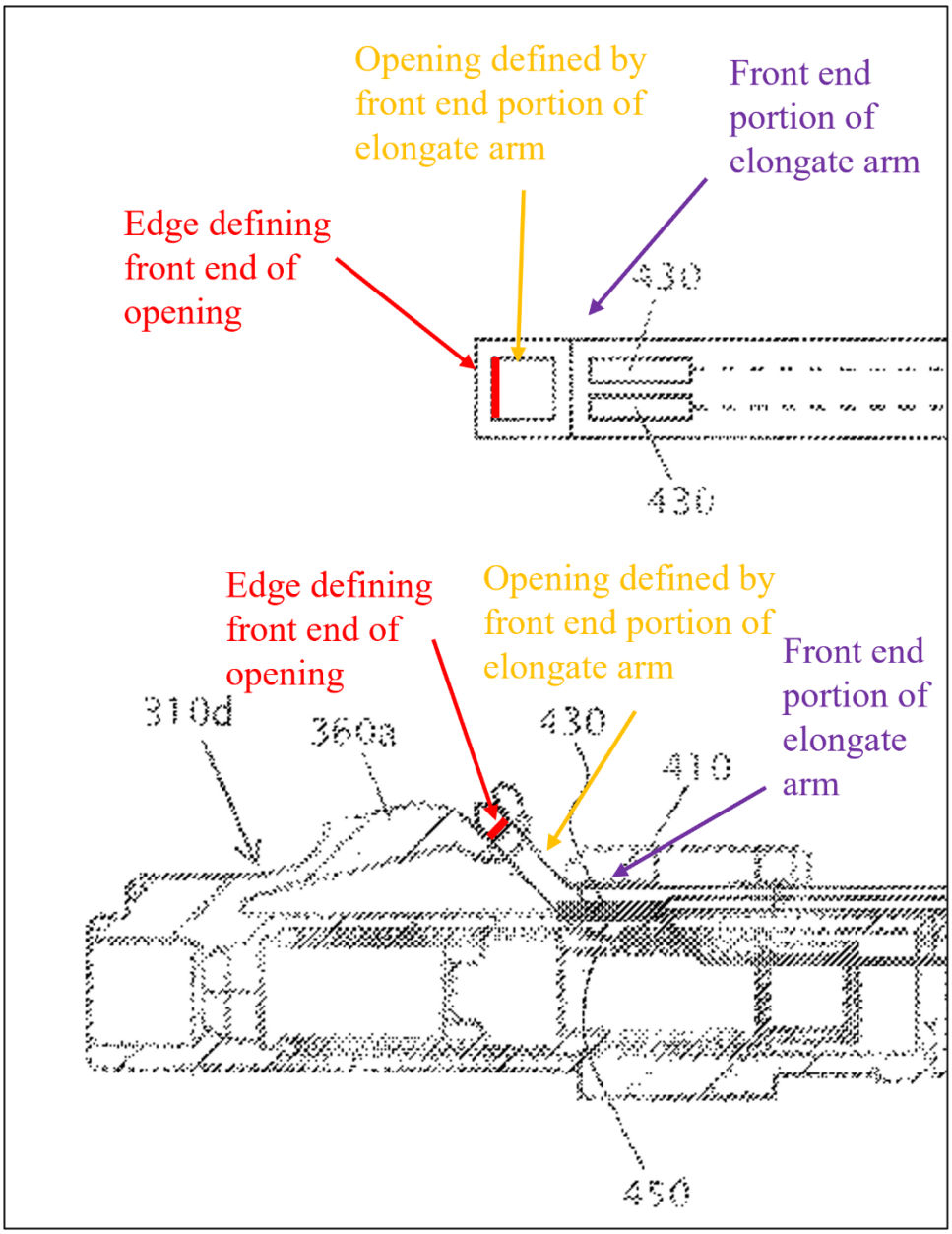

EX1003, FIG. 14 (annotated, excerpt).

261. Accordingly, it is my opinion that Scherer discloses the additional features of claim element [9.1]. Additionally, the features disclosed by Scherer relevant to claim element [9.1] would be preserved in the modification of Scherer

in view of Lee. See Section IX.A. It is my opinion that a POSITA would therefore have found claim 9 obvious over Scherer in view of Lee.

K. Claim 10

1. Preamble – "The optical fiber connector as set forth in claim 9, wherein"

262. Claim 10 depends on claims 1 and 4-9, and for at least the reasons discussed above in reference to claim 1 and claims 4-9, the combination of Scherer and Lee renders obvious claim 1 and claims 4-9. *See* Sections IX.B, IX.E-J. Additionally, for at least the reasons below, it is my opinion that the combination of Scherer and Lee renders obvious claim 10 of the '369 Patent.

2. Element [10.1] – "the depressible latch has an upper surface, the edge opposing the upper surface."

263. It is my opinion a POSITA would have understood Scherer discloses the features of claim element [10.1].

264. As noted above with regard to claim 9, Scherer discloses that a front end portion of the elongate arm (opening defined at the front end of the elongate part of extender 330d) includes an edge defining a front of the opening. Section IX.J. I believe that Scherer further discloses that the upper surface of the latch arm (lever 360a) opposes the edge. *See, e.g.*, EX1003, FIG. 14.

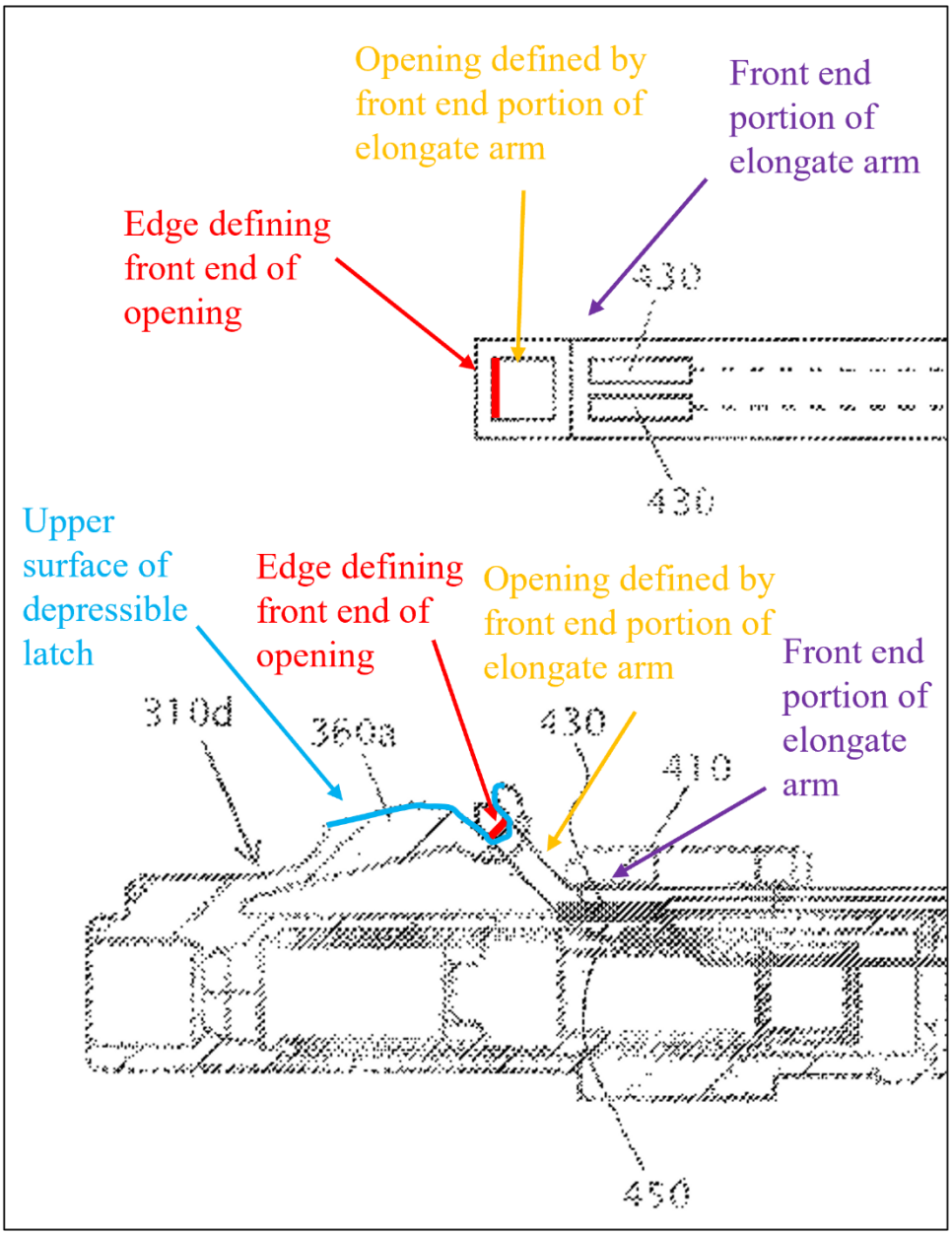

EX1003, FIG. 14 (annotated, excerpt).

265. Scherer details how the lever 360a is actuated by pulling the extender 330d rearward. EX1003, ¶54 ("extender 300d can slide relative to connector body 400a to depress or compress lever 360a.").

266. As explained above, a POSITA would have understood that the "extender 300d" mentioned in paragraph 54 is the "extender 330d" referred to elsewhere in the same paragraph. Section VII.A. The description of the extender 330d depressing the lever 360a is consistent with the leading edge of the opening defined at the front end portion of the extender 330d opposing the upper surface of the lever 360a, as this arrangement would cause the extender 330d to depress the lever 360a when slid longitudinally.

267. Accordingly, it is my opinion that Scherer discloses the additional features of claim element [10.1]. Additionally, the features disclosed by Scherer relevant to claim element [10.1] would be preserved in the modification of Scherer in view of Lee. *See* Section IX.A. It is my opinion that a POSITA would therefore have found claim 10 obvious over Scherer in view of Lee.

L. Claim 14

1. Preamble – "The optical fiber connector as set forth in claim 10, wherein"

268. I note claim 14 is addressed out of order because none of claims 11-13 depend from claims 9 or 10.

269. Claim 14 depends on claims 1 and 4-10, and for at least the reasons discussed above in reference to claim 1 and claims 4-10, the combination of Scherer and Lee renders obvious claim 1 and claims 4-10. *See* Sections IX.B,

IX.E-K. Additionally, for at least the reasons below, it is my opinion that the combination of Scherer and Lee renders obvious claim 14 of the '369 Patent.

2. Element [14.1] – "the elongate arm is configured to be pulled rearward along the longitudinal axis with respect to the connector housing whereby the edge slides longitudinally along the upper surface to depress the depressible latch."

270. It is my opinion a POSITA would have understood Scherer in view of Lee renders obvious the features of claim element [14.1]. In my opinion, a POSITA would have understood Scherer discloses the elongate arm (elongate part of extender 330d) is configured to be pulled rearward along the longitudinal axis with respect to the connector housing to depress the depressible latch (lever 360a). *See, e.g.*, EX1003, ¶¶51, 54, FIG. 14.

271. Scherer's Figure 11 shows that the "direction 340" is proximal, i.e., rearward along a longitudinal axis that includes the distal and proximal directions relative to which the proximal end 380 and distal end 350 are defined.

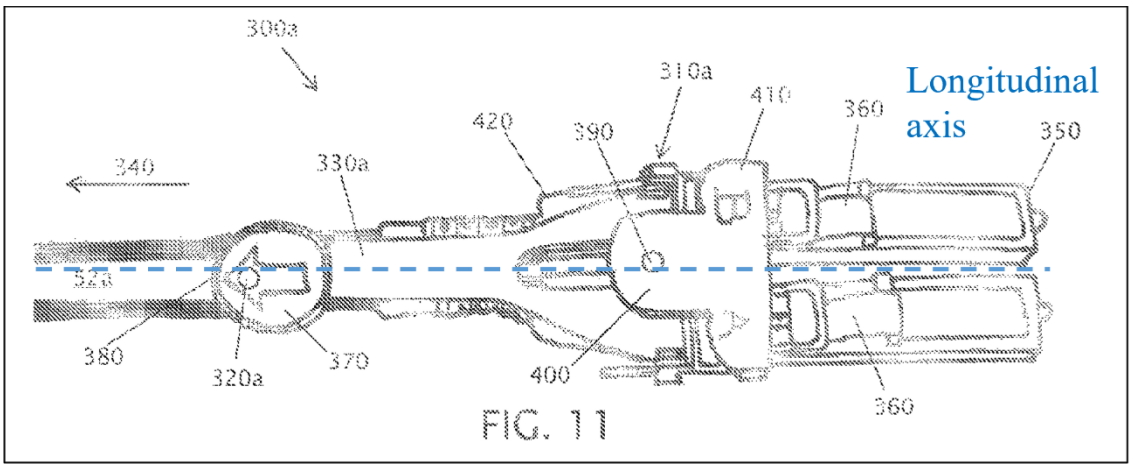

EX1003, FIG. 11 (annotated).

272. IScherer states that the "cables 300a, 300b, 300c" have "fiber-optic cable connector hoods 310a, 310b, 310c," and the hoods "each include[] an extender or remote release tab (330a, 330b, 330c)" that "can simply be pulled by a user in a direction 340 away from a distal end 350 of the connector to laterally compress the lever(s) (360) of the connector toward the transmission line(s) 52a." EX1003, ¶51.

273. Scherer then states "[c]able 300d is similar to cable 300c with the primary exception that cable 300d includes only a single fiber optic cable." EX1003, ¶54.

274. The skilled person would therefore understand that from reference to the disclosure relating to cable 300c, and the illustration of cable 300d in Figure 14 that the "extender 300d [*sic*] can slide relative to connector body 400a to depress or compress lever 360a" means the extender 300d can be pulled in the proximal direction relative to which "proximal end 380" is defined, i.e., rearward, along the longitudinal axis to depress the lever 360a. EX1003, ¶54. (Because Scherer refers to a "cable 300d" three times and "extender 330d" in the same paragraph, I note that the foregoing reference to "extender 300d" is a clerical error, and that the intended element is "330d", as discussed in Section IX.B.6, and this error does not change my analysis).

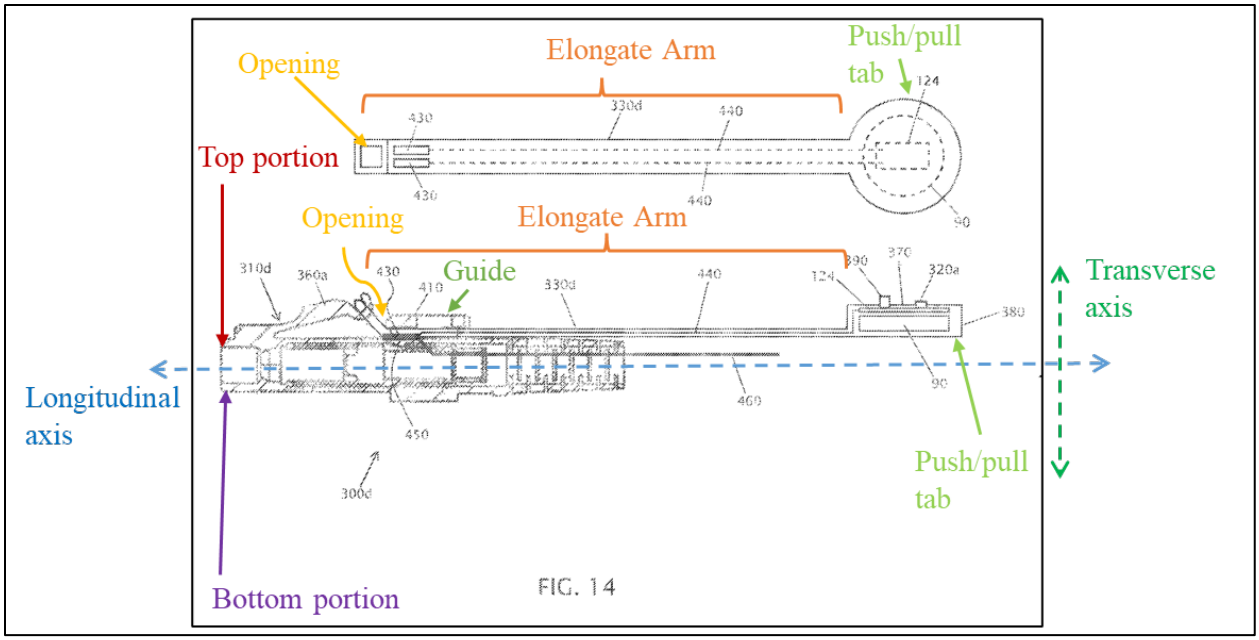

EX1003, FIG. 14 (annotated).

275. Additionally, as explained above with regard to claims 9 and 10, Scherer's elongate arm (extender 330d) includes a front end portion defining an opening, an edge defines a front end of the opening, and the edge is in contact with an upper surface of the latch (lever 360a).

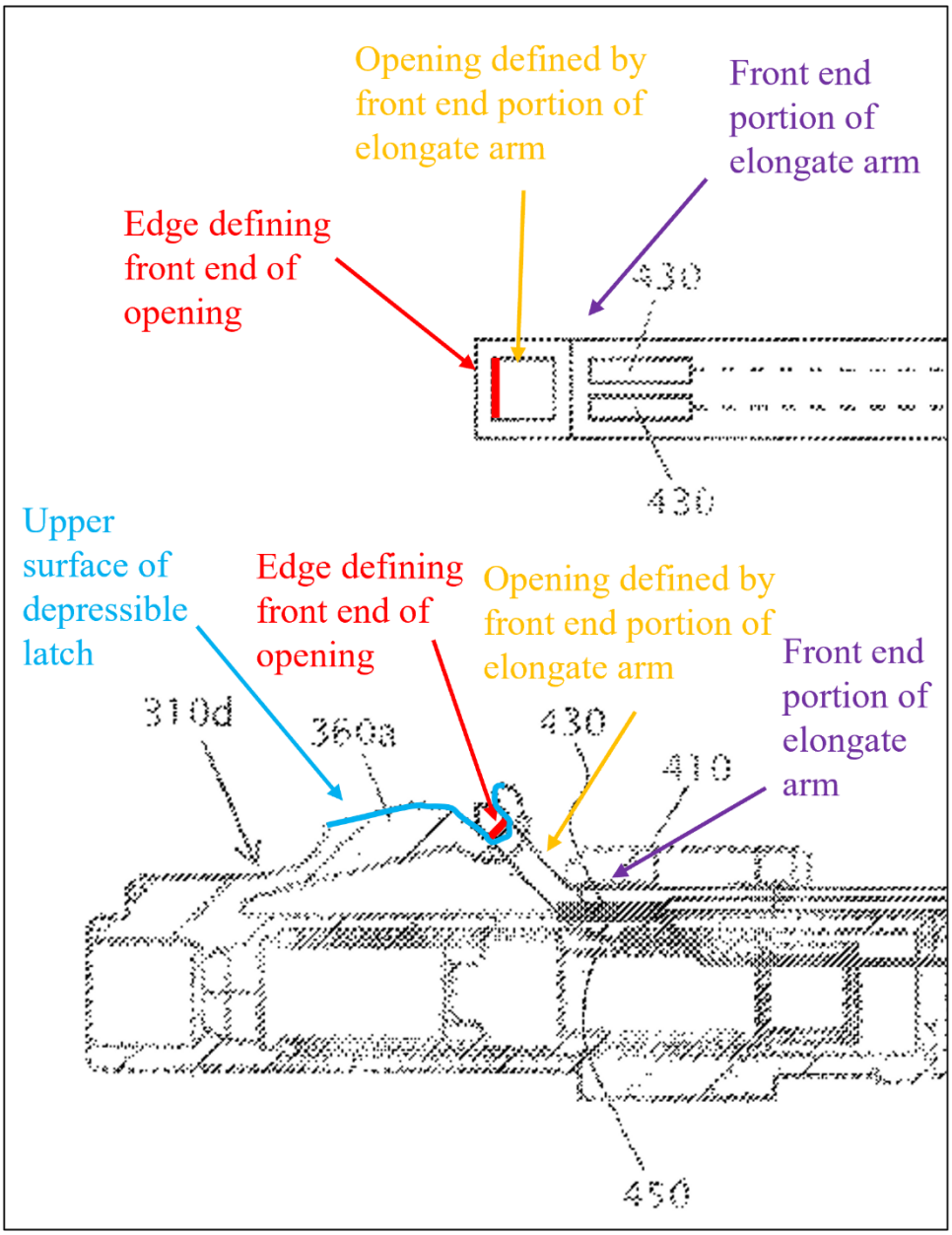

EX1003, FIG. 14 (annotated, excerpt).

276. In my opinion, a POSITA would therefore understand that, when Scherer's extender 330d is pulled rearward, the edge included by the front end portion of the extender 330d acts on the upper surface of the lever 360a to depress the lever 360a. Patent Owner may allege that Scherer does not explicitly disclose

that the edge slides longitudinally along an upper surface of the lever. However, this feature was well known in the art as demonstrated by Lee, and it would have been obvious to modify Scherer in view of Lee to have this feature.

277. A POSITA would have understood that Lee discloses the front end portion of the elongate arm includes an edge defining a front of the opening and further that the upper surface of the latch arm opposes the edge. *See, e.g.*, EX1004, ¶¶47-48, FIGS. 1-5.

278. A POSITA would have understood Lee to disclose that the handle 30 is configured to be pulled rearward along the longitudinal axis with respect to the connector housing (the inner and outer connector bodies 24, 36) whereby the edge slides longitudinally along the upper surface of the latch arm 28 to depress the latch arm 28. *See, e.g.,* EX1004, ¶¶30, 32, 43, 47-48, FIGS. 1-5.

279. For example, Lee explains and illustrates that a pushing feature 142 is part of an edge defining a front end of the opening 54 defined in the front end portion of the elongate arm (handle 30) and that the pushing feature 142 is included in the front portion of the elongate arm. *See* EX1004, ¶¶30, 32, 43, 47-48, FIGS. 1-5. Additionally, the rounded surface 144 of the pushing feature 142 is such an edge. *See* EX1004, ¶¶30, 32, 43, 47-48, FIGS. 1-5.

280. The pushing feature 142 including the rounded surface 144 are provided to be opposite the upper surface of the ramp 124 of the latch arm 28

because the pushing feature 142 contacts the upper surface of the ramp 124 of the latch arm 28 to actuate the latch arm 28 when the handle is pulled rearwardly. *See, e.g.*, EX1004, ¶47 ("the rounded surface 144 contacts and slides along the ramp 124 to cause the latch arm 28 to flex toward the inner connector body 24").

281. I have annotated Lee Figures 3 and 5 to show the edge and upper surface of the latch arm 28, but these features may also be seen in Figures 1, 2, and 4.

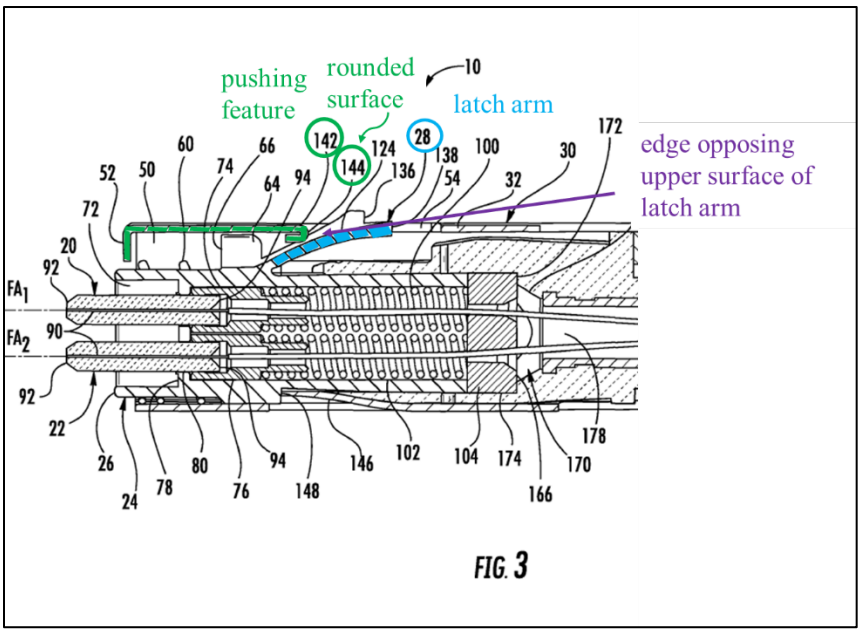

EX1004, FIG. 3 (annotated, excerpt).

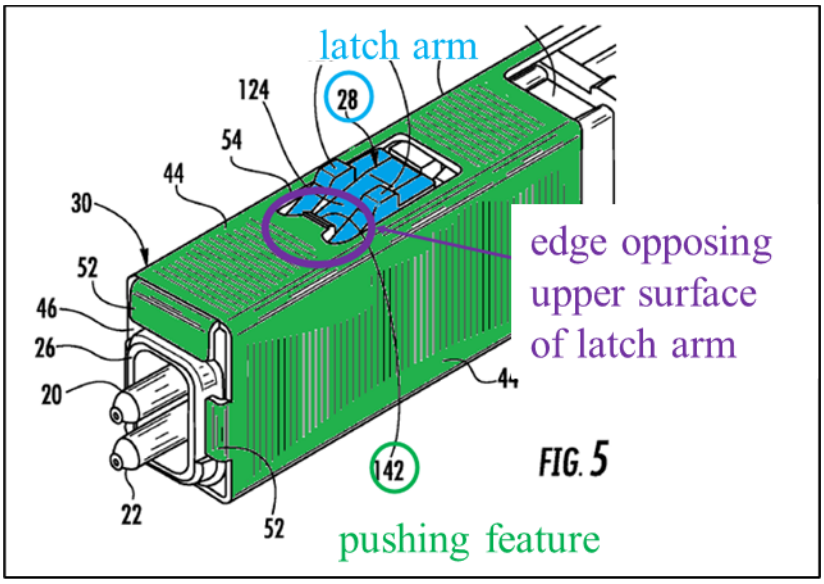

EX1004, FIG. 5 (annotated, excerpt).

282. Lee details how the latch arm 28 is actuated by pulling the handle 30 rearwardly, which I have explained above. *See* Sections IX.B.6 (element [1.5]), IX.A.2. This illustrates that Lee's pushing feature 142 and rounded surface 144 slide longitudinally along the upper surface of the latch arm 28 (*i.e.*, along the ramp 124) to depress the latch arm 28 when the handle 30 is pulled rearwardly with respect to the connector housing (the inner and outer connector bodies 24, 36). *See also, e.g.,* EX1004, ¶47 ("When the handle 30 is moved rearwardly relative to the inner connector body 24, the rounded surface 144 contacts and slides along the ramp 124 to cause the latch arm 28 to flex toward the inner connector body 24.").

283. In view of the foregoing, I believe a skilled person would have found it obvious to implement Scherer in view of Lee such that Scherer's edge would

slide longitudinally along the upper surface of Scherer's latch (lever 360a) when Scherer's elongate arm (extender 330d) is moved relative to the latch along the longitudinal axis, and that when the elongate arm is pulled rearward along the longitudinal axis the edge would depress the latch.

284. That implementation would be obvious because it would amount to substituting an incidental feature of Scherer's disclosure with an equivalent feature having the same purpose and result in Lee.

285. As noted above, I believe that Scherer discloses all additional features recited in claim 14. Specifically, Scherer does not expressly state whether depression of the lever 360a results from the edge highlighted in Scherer's Figure 14 above sliding along the upper surface of the lever 360a or, for example, the edge remaining seated in the hook portion of the lever 360a while flexure of the extender 330d under tension brings the edge and the hook portion closer to the connector housing. However, in either situation, a POSITA would recognize that there would be some movement of the edge in the longitudinal direction.

286. Patent Owner may allege that Scherer does not specify the depression mechanism and therefore that Scherer does not disclose "whereby the edge slides longitudinally along the upper surface." However, because the above discussed portions of Lee establish that it was within the skill of a POSITA to construct similar optical fiber connectors such that pulling an elongate arm rearward causes a

front edge of an opening defined by a front end portion of the arm to slide longitudinally along an upper surface of a latch, thereby depressing the latch, I believe it would have been obvious to construct Scherer's lever 360a and extender 330d such that the upper surface of the lever 360a has a smooth ramp along the entirely of the upper surface (thereby removing the hook feature) alike to Lee's ramp 124 for the highlighted edge of Scherer's extender 330d to slide along.

287. In addition to being derived from features in Lee intended to solve the same problem as the modified portions of Scherer, such a modification would have had predictable results that would operate in the same manner Scherer already describes.

288. Accordingly, I believe a POSITA would have been motivated to modify Scherer in view of Lee for at least the reasons explained above and in Section IX.A. Therefore, it is my opinion that a POSITA would have understood Scherer in view of Lee renders obvious the additional features recited in claim element [14.1], and that a POSITA would therefore have found claim 14 obvious over Scherer in view of Lee.

M. Claim 11

1. Preamble – "The optical fiber connector as set forth in claim 1, wherein"

289. Claim 11 depends on claim 1, and for at least the reasons discussed above in reference to claim 1, the combination of Scherer and Lee renders obvious

claim 1. *See* Section IX.B. Additionally, for at least the reasons below, it is my opinion that the combination of Scherer and Lee renders obvious claim 11 of the '369 Patent.

2. Element [11.1] – "the connector housing includes a front body and a back body."

290. It is my opinion a POSITA would have understood Scherer discloses the features of claim element [11.1]. In my opinion, a POSITA would have understood Scherer discloses the connector housing that includes multiple parts at least as I have explained above when I first discussed the "connector housing" element of claim 1. *See* Section IX.B.3 (discussing element [1.2]).

291. To elaborate briefly, Scherer's connector housing includes a portion of the connector hood 310d, as shown in the annotated copy of Scherer's Figure 14 below.

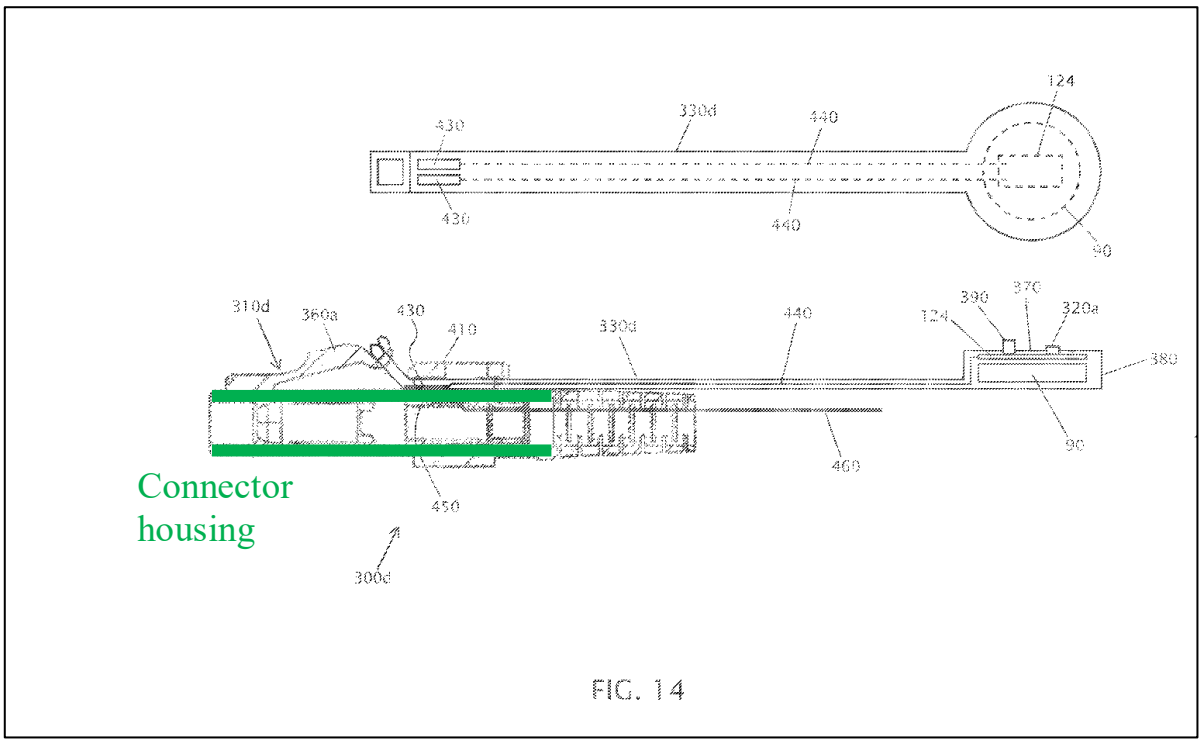

EX1003, FIG. 14 (annotated).

292. Scherer explains the meaning of "connector hood" for the purposes of the disclosure refers to a combination of a connector and a boot, ("a connector assembly or hood 54 comprises a connector 56 coupled to a boot 58, and the connector hood is coupled to an end of cable 52. . . . The overall connecter (connector plus boot) will be referred to as the connector hood in this description and in the appended claims."). EX1003, ¶35.

293. A POSITA therefore would have understood the element in Figure 14 that Scherer labels as a "connector hood 310d" to also be an assembly of an element termed a "connector" and another element termed a "boot." Scherer

illustrates an example arrangement of a connector 56 and boot 58 discussed in paragraph 35 in Figure 3:

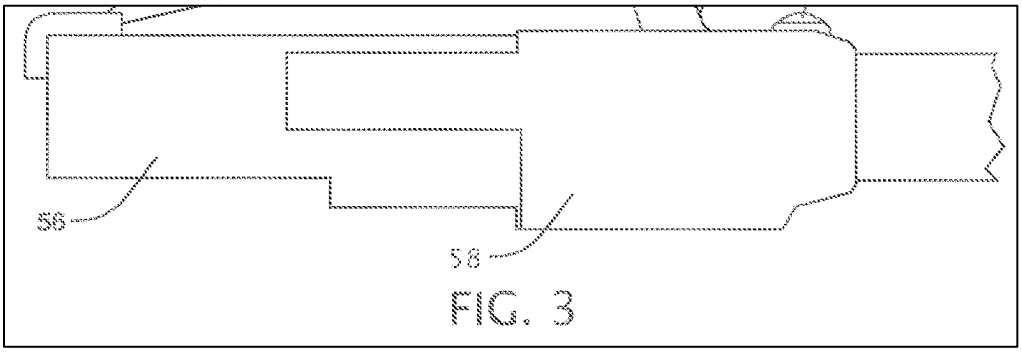

EX1003, FIG. 3 (excerpt).

294. As shown in Figure 3, the connector 56 and the boot 58 are respectively a front body and a back body within the connector hood 54. Thus, where Scherer states that the cable 300d comprises a "connector body 400" an "boot 420" without using either numeral in Figure 14, a POSITA would understand that the elements highlighted blue and red in the portion of Figure 14 below would be the connector and boot, respectively, that make up the hood 310d of the cable 300d. EX1003, ¶54, FIG. 14.

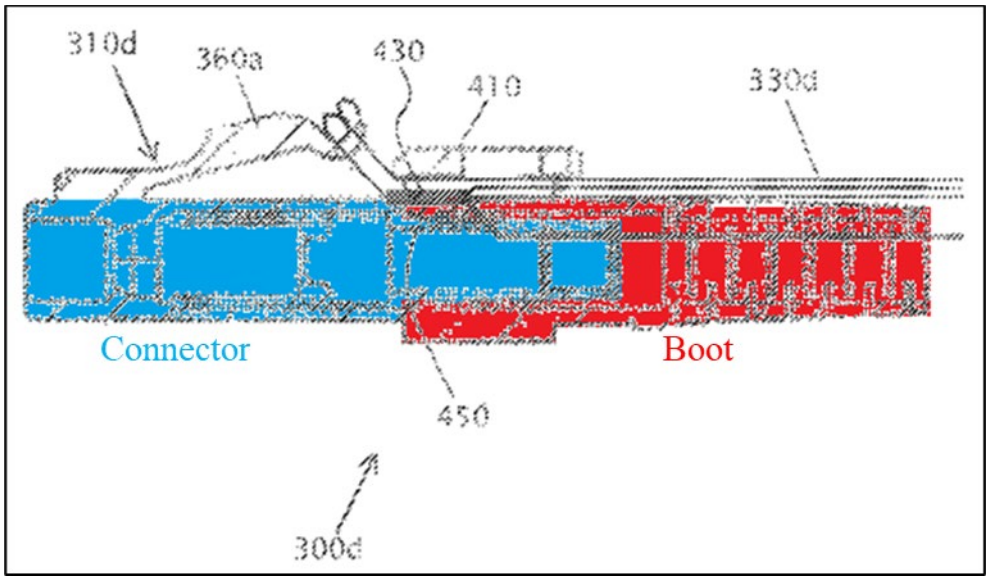

EX1003, FIG. 14 (annotated, excerpt).

295. As shown above, the connector and boot of Scherer's hood 310d are a front body and back body, respectively. Each makes up a portion of the part of the connector hood 310d that defines the connector housing, meaning Scherer discloses a connector housing that includes a front body and back body as claimed.

296. Accordingly, it is my opinion that Scherer discloses the additional features of claim element [11.1]. Additionally, the features disclosed by Scherer relevant to claim element [11.1] would be preserved in the modification of Scherer in view of Lee. See Section IX.A. It is my opinion that a POSITA would therefore have found claim 11 obvious over Scherer in view of Lee.

N. Claim 12

1. Preamble – "The optical fiber connector as set forth in claim 11,"

297. Claim 12 depends on claims 1 and 11, and for at least the reasons discussed above in reference to claims 1 and 11, the combination of Scherer and Lee renders obvious claims 1 and 11. *See* Sections IX.B, IX.M. Additionally, for at least the reasons below, it is my opinion that the combination of Scherer and Lee renders obvious claim 12 of the '369 Patent.

2. Element [12.1] – "further comprising a single cable boot extending rearward from the back body."

298. It is my opinion a POSITA would have understood Scherer discloses the features of claim element [12.1], as will be discussed further below. EX1003, ¶¶35, 54, FIG. 14. For at least the reasons below, Scherer in view of Lee renders obvious claim 12 because Scherer discloses the additional limitations of claim 12.

299. The '369 Patent does not explicitly define the term "boot," although it does refer to a "boot 309" in Figure 3, EX1001, 6:64–7:5, and states that "[a] receptacle can hold one or more connector inner bodies forming a single boot for all the optical fibers of the inner bodies." EX1001, Abstract.

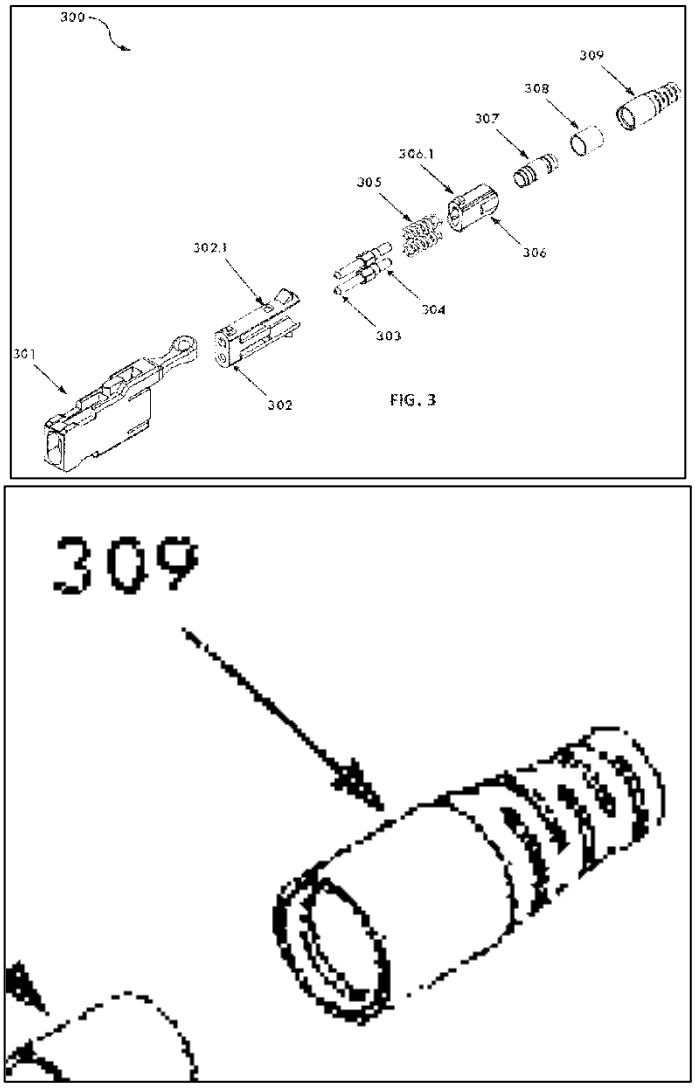

EX1001, FIG. 3 (excerpt).

300. In my opinion, a POSITA would have recognized the boots illustrated in the ’369 Patent, including the boot 309 shown above, as a strain relieving cover for the cable where the cable enters the connector. It is further my opinion that such a strain relieving cover is what a POSITA would understand the word “boot” to refer to in the field of optical fiber connectors, and that such an element is therefore within the plain and ordinary meaning of the term “boot.”

301. Merely as corroborating evidence of this meaning, Lee uses of the term "boot 38" to refer to a similar element. EX1004, ¶¶30, 40, FIG. 1.

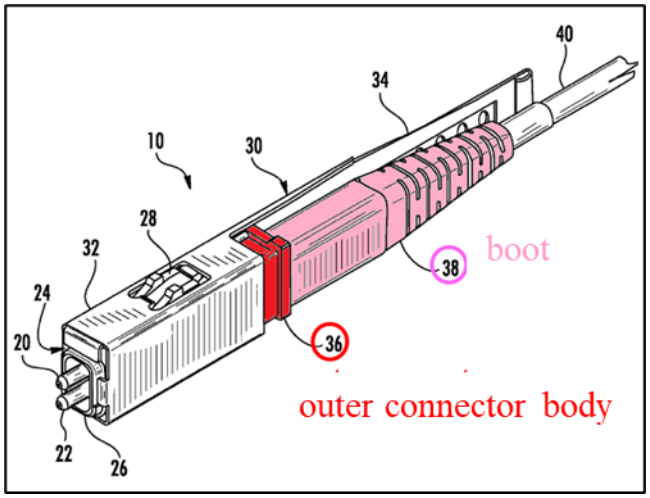

EX1004, FIG. 1 (annotated, excerpt).

302. Scherer similarly uses the term "boot" to refer to elements that include similar strain relieving covers. EX1003, ¶51, FIG. 11. For example, Scherer states that the cable 300a of Figure 11 has a boot 420. EX1003, ¶51, FIG. 11.

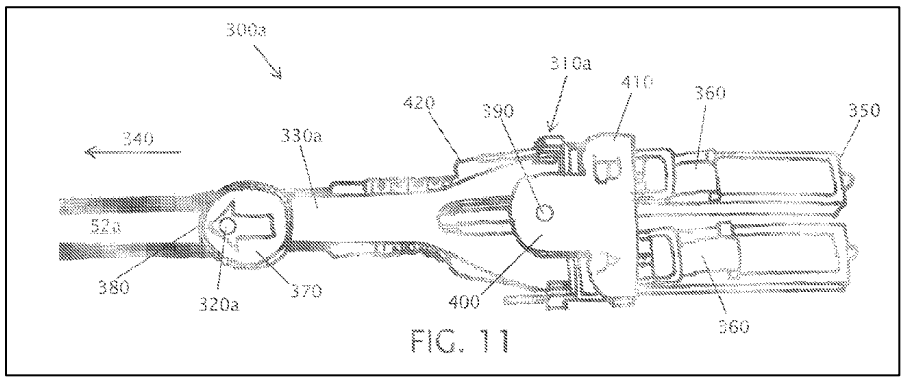

EX1003, FIG. 11.

303. As shown above, the boot 420 includes a strain relieving cover for the transmission line 52a. The portion of Scherer's connector hood 310d that a

POSITA would have recognized as being the "boot" according to Scherer's terminology (this portion is highlighted red in a copy of a portion of Figure 14 below, *see* Section IX.M) is similarly depicted as including a strain relieving feature.

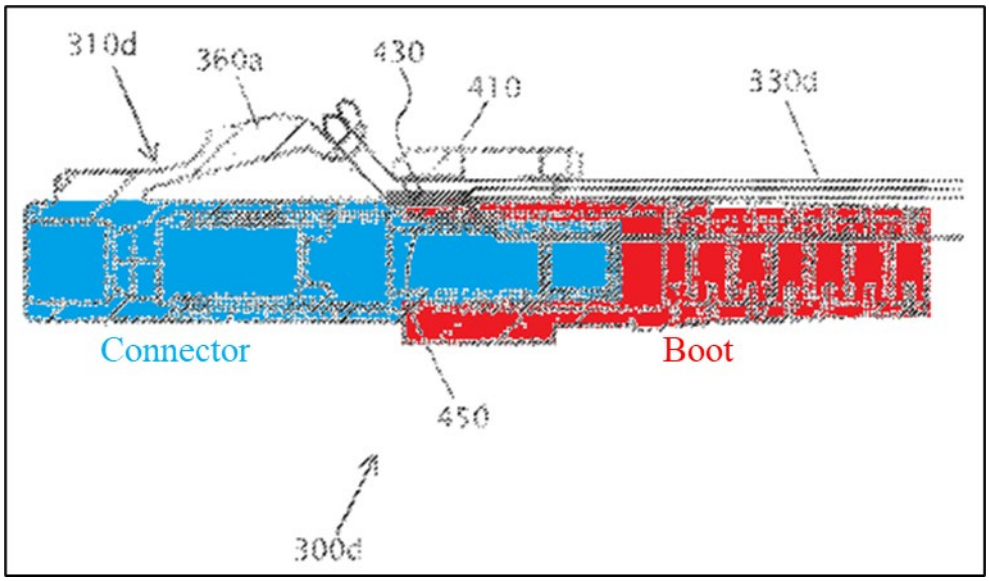

EX1003, FIG. 14 (annotated).

304. For those reasons, in my opinion, Scherer's connector hood 310d includes a strain relieving cover that is a "boot" according to the plain and ordinary meaning of that term, which aligns with the usage of "boot" in both the '369 Patent and Lee. That strain relieving cover is integrally formed with the portion of the hood 310d that defines the back body of the connector housing identified above in Section IX.M. Thus, in my opinion, Scherer discloses a boot integrally formed with the back body of its connector housing.

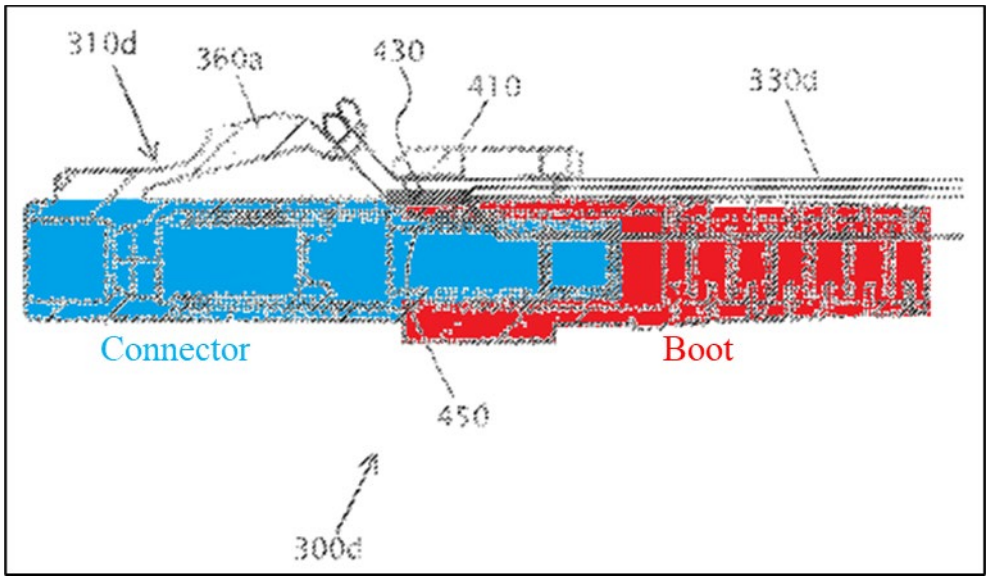

EX1003 FIG. 14 (annotated, excerpt).

305. In view of the foregoing, I believe a POSITA would have understood that Scherer discloses a single cable boot extending rearward from the back body of the connector housing.

306. Accordingly, it is my opinion that Scherer discloses the additional features of claim element [12.1]. Additionally, the features disclosed by Scherer relevant to claim element [12.1] would be preserved in the modification of Scherer in view of Lee. See Section IX.A. It is my opinion that a POSITA would therefore have found claim 12 obvious over Scherer in view of Lee.

O. Claim 13

1. Preamble – "The optical fiber connector as set forth in claim 1,"

307. Claim 13 depends on claim 1, and for at least the reasons discussed above in reference to claim 1, the combination of Scherer and Lee renders obvious

claim 1. *See* Section IX.B. Additionally, for at least the reasons below, it is my opinion that the combination of Scherer and Lee renders obvious claim 13 of the '369 Patent.

2. Element [13.1] – "further comprising a single cable boot extending rearward from the connector housing."

308. It is my opinion a POSITA would have understood Scherer discloses the features of claim element [13.1], as will be discussed further below. EX1003, ¶¶35, 54, FIG. 14.

309. The '369 Patent does not explicitly define the term "boot," but it does refer to a "boot 309" in Figure 3, EX1001, 6:64–7:5, and states that "[a] receptacle can hold one or more connector inner bodies forming a single boot for all the optical fibers of the inner bodies." EX1001, Abstract.

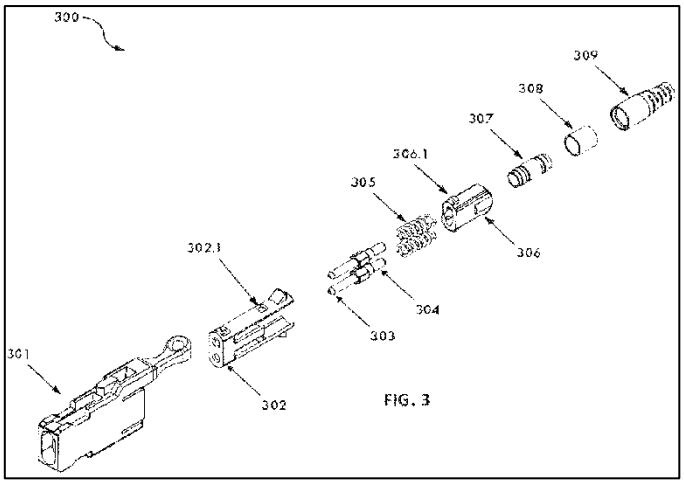

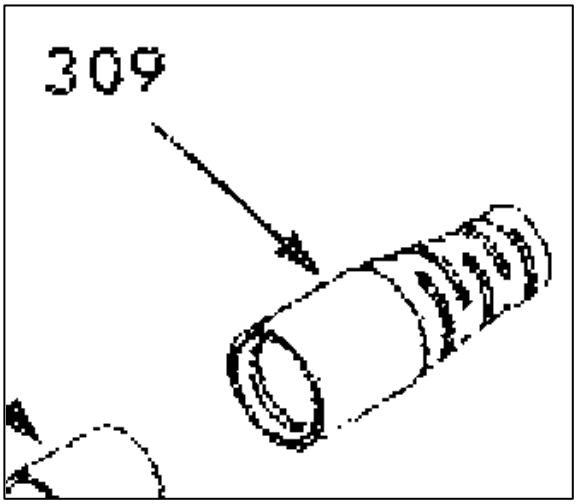

EX1001, FIG. 3 (excerpt).

310. In my opinion, a POSITA would have recognized the boots illustrated in the ’369 Patent, including the boot 309 shown above, as a strain relieving cover for the cable where the cable enters the connector. It is further my opinion that such a strain relieving cover is what a POSITA would understand the word “boot” to refer to in the field of optical fiber connectors, and that such an element is therefore within the plain and ordinary meaning of the term “boot.”

311. Merely as further corroborating evidence, Lee uses of the term "boot 38" to refer to a similar element. EX1004, ¶¶30, 40, FIG. 1.

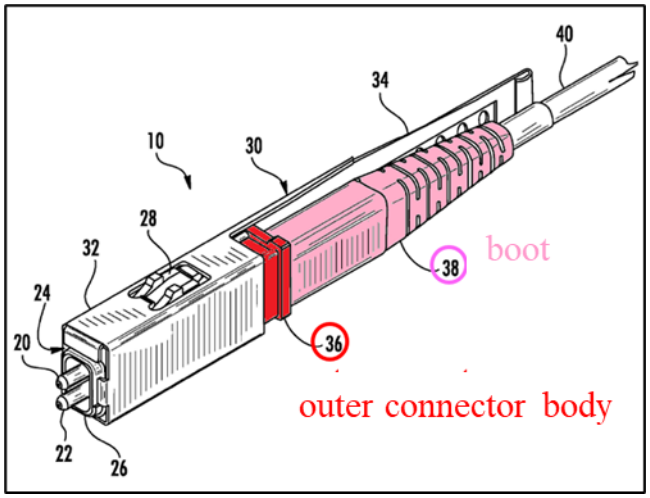

EX1004, FIG. 1 (annotated, excerpt).

312. Scherer similarly uses the term "boot" to refer to elements that include similar strain relieving covers. EX1003, ¶51, FIG. 11. For example, Scherer states that the cable 300a of Figure 11 has a boot 420. EX1003, ¶51, FIG. 11.

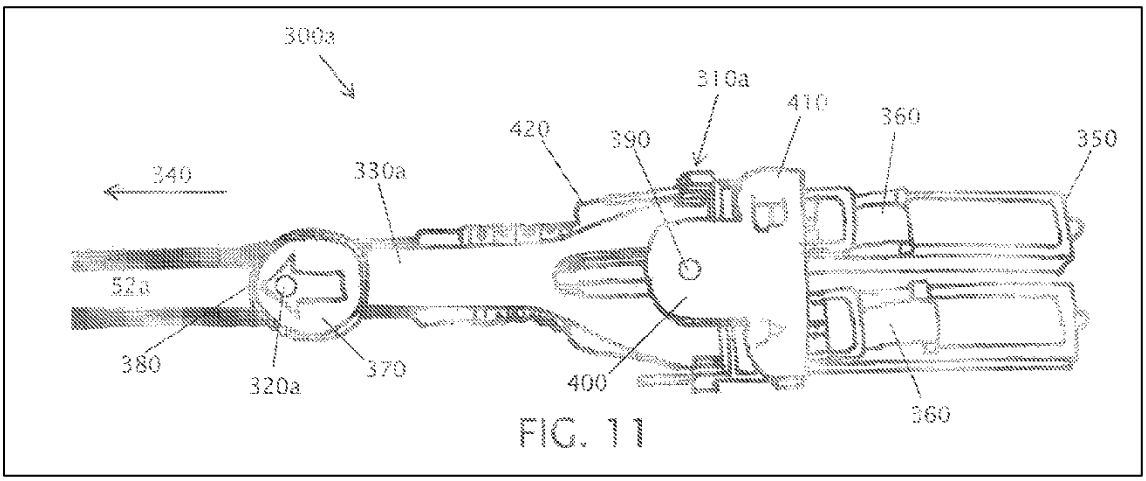

EX1003, FIG. 11.

313. As shown above, the boot 420 includes a strain relieving cover for the transmission line 52a. The portion of Scherer's connector hood 310d that a POSITA would have recognized as being the "boot" according to Scherer's terminology (this portion is highlighted red in a copy of a portion of Figure 14 below, *see* Section IX.M) is similarly depicted as including a strain relieving feature.

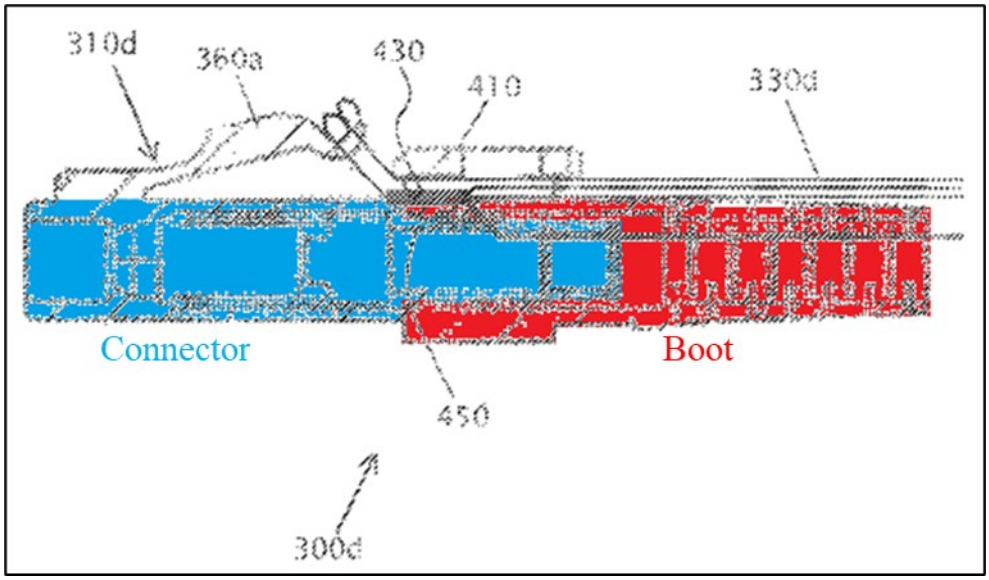

EX1003, FIG. 14 (annotated, excerpt).

314. For those reasons, in my opinion, Scherer's connector hood 310d includes a strain relieving cover that is a "boot" according to the plain and ordinary meaning of that term, which aligns with the usage of "boot" in both the '369 Patent and Lee. That strain relieving cover is integrally formed with the portion of the hood 310d that defines the back body of the connector housing identified above in

Section IX.M. Thus, in my opinion, Scherer discloses a boot integrally formed with the back body of its connector housing.

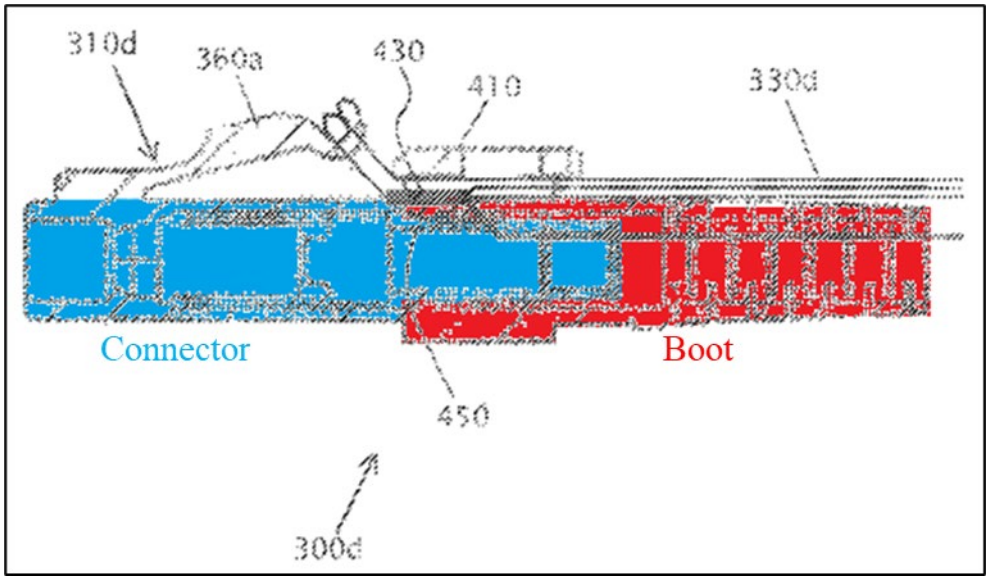

EX1003, FIG. 14 (annotated, excerpt).

315. In view of the foregoing, I believe a POSITA would have understood that Scherer discloses a single cable boot extending rearward from the connector housing.

316. Accordingly, it is my opinion that Scherer discloses the additional features of claim element [13.1]. Additionally, the features disclosed by Scherer relevant to claim element [13.1] would be preserved in the modification of Scherer in view of Lee. *See* Section IX.A. It is my opinion that a POSITA would therefore have found claim 13 obvious over Scherer in view of Lee.

P. Claim 15

1. Preamble – "The optical fiber connector as set forth in claim 14, wherein"

317. Claim 15 depends on claims 1, 4-10, and 14 and for at least the reasons discussed above in reference to claim 1, claims 4-10, and claim 14, the combination of Scherer and Lee renders obvious claim 1, claims 4-10, and claim 14. *See* Sections IX.B, IX.E-L. Additionally, for at least the reasons below, it is my opinion that the combination of Scherer and Lee renders obvious claim 15 of the '369 Patent.

2. Element [15.1] – "the guide defines a groove extending along the longitudinal axis."

318. Claim element [15.1] is identical to claim element [2.1]. Accordingly, for at least the reasons described above with respect to claim element [2.1], it is my opinion that a POSITA would have understood Scherer discloses claim element [15.1]. The additional subject matter recited in claim 15 is identical to claim 2. Scherer in view of Lee thus renders obvious claim 15 because Scherer discloses the additional subject matter of claims 2 and 15 as I have already discussed. *See* Section IX.C. Additionally, the features disclosed by Scherer relevant to claim element [15.1] would be preserved in the modification of Scherer in view of Lee. *See* Section IX.A. It is my opinion that a POSITA would therefore have found claim 15 obvious over Scherer in view of Lee.

Q. Claim 16

1. Preamble – "The optical fiber connector as set forth in claim 15, wherein"

319. Claim 16 depends on claims 1, 4-10, and 14-15 and for at least the reasons discussed above in reference to claim 1, claims 4-10, and claims 14-15, the combination of Scherer and Lee renders obvious claim 1, claims 4-10, and claims 14-15. *See* Sections IX.B, IX.E-L, IX.P. Additionally, for at least the reasons below, it is my opinion that the combination of Scherer and Lee renders obvious claim 16 of the '369 Patent.

2. Element [16.1] – "the elongate arm is slidably received in the groove."

320. Claim element [16.1] is identical to claim element [3.1]. Accordingly, for at least the reasons described above with respect to claim element [3.1], it is my opinion that a POSITA would have understood Scherer discloses claim element [16.1]. *See* Sections IX.D, IX.P. Additionally, the features disclosed by Scherer relevant to claim element [16.1] would be preserved in the modification of Scherer in view of Lee. *See* Section IX.A. It is my opinion that a POSITA would therefore have found claim 16 obvious over Scherer in view of Lee.

R. Claim 17

1. Preamble – "The optical fiber connector as set forth in claim 15, wherein"

321. Claim 17 depends on claims 1, 4-10, and 14-15 and for at least the reasons discussed above in reference to claim 1, claims 4-10, and claims 14-15, the combination of Scherer and Lee renders obvious claim 1, claims 4-10, and claims 14-15. *See* Sections IX.B, IX.E-L, IX.P. Additionally, for at least the reasons below, it is my opinion that the combination of Scherer and Lee renders obvious claim 17 of the '369 Patent.

2. Element [17.1] – "the connector housing includes a front body and a back body."

322. Claim element [17.1] is identical to claim element [11.1]. Accordingly, for at least the reasons described above with respect to claim element [11.1], it is my opinion that a POSITA would have understood Scherer discloses claim element [17.1]. *See* Section IX.M. Additionally, the features disclosed by Scherer relevant to claim element [17.1] would be preserved in the modification of Scherer in view of Lee. *See* Section IX.A. It is my opinion that a POSITA would therefore have found claim 17 obvious over Scherer in view of Lee.

S. Claim 20

323. I note that the subject matter of independent claim 20 simply combines preceding claim elements that I have already addressed. Specifically, independent claim 20 includes all features of the preamble of claim 1 through

element [1.5] in addition to the features of dependent claims 4-10 and 14. *See* Sections IX.B.1-6, IX.E-L. (*i.e.*, all elements of claim 1, except element [1.6], and dependent claims 4-10 and 14).

1. Preamble – "An optical fiber connector comprising:"

324. The preamble of claim 20 is identical to the preamble of claim 1. Accordingly, for at least the reasons set forth above with respect to the preamble of claim 1, it is my opinion that Scherer discloses the preamble of claim 20. *See* Section IX.B.1.

2. Element [20.1] – "first and second optical fiber ferrules;"

325. Claim element [20.1] is identical to element [1.1]. Accordingly, for at least reasons set forth above with respect to claim element [1.1], it is my opinion that Scherer in view of Lee renders obvious the features of claim element [20.1]. *See* Section IX.B.2.

3. Element [20.2] – "a connector housing having a front end portion and a rear end portion spaced apart along a longitudinal axis, the connector housing comprising a top portion and a bottom portion spaced apart along a transverse axis perpendicular to the longitudinal axis,"

326. Claim element [20.2] is identical to claim element [1.2]. Accordingly, for at least reasons set forth above with respect to claim element [1.2], it is my opinion that Scherer discloses the features of claim element [20.2]. *See* Section IX.B.3.

4. Element [20.3] – "the connector housing holding the first and second optical fiber ferrules such that the first and second optical fiber ferrules are exposed through the front end portion for making an optical connection and the first and second optical fiber ferrules are spaced apart from one another along the transverse axis,"

327. Claim element [20.3] is identical to claim element [1.3]. Accordingly, for at least reasons set forth above with respect to element [1.3], it is my opinion that Scherer in view of Lee renders obvious the features of claim element [20.3]. *See* Section IX.B.4.

5. Element [20.4] – "a depressible latch above the top portion of the connector housing; and"

328. Claim element [20.4] is identical to claim element [1.4]. Accordingly, for at least reasons set forth above with respect to claim element [1.4], it is my opinion that Scherer discloses the features of the claim element [20.4]. *See* Section IX.B.5. Additionally, the features disclosed by Scherer relevant to claim element [20.4] would be preserved in the modification of Scherer in view of Lee. *See* Section IX.A.

6. Element [20.5] – "an elongate arm connected to the connector housing above the top portion and configured to be pulled to actuate the depressible latch;"

329. Claim element [20.5] is identical to claim element [1.5]. Accordingly, for at least reasons set forth above with respect to claim element [1.5], it is my opinion that Scherer discloses the features of claim element [20.5]. *See* Section IX.B.6. Additionally, the features disclosed by Scherer relevant to claim element

[20.5] would be preserved in the modification of Scherer in view of Lee. *See* Section IX.A

7. Element [20.6] – "wherein the elongate arm comprises a front end portion and a rear end portion spaced apart along the longitudinal axis;"

330. Claim element [20.6] is identical to claim element [4.1]. Accordingly, for at least reasons set forth above with respect to claim element [4.1], it is my opinion that Scherer discloses the features of claim element [20.6]. *See* Section IX.E. Additionally, the features disclosed by Scherer relevant to claim element [20.6] would be preserved in the modification of Scherer in view of Lee. *See* Section IX.A.

8. Element [20.7] – "wherein the front end portion of the elongate arm defines an opening;"

331. Claim element [20.7] is identical to claim element [5.1]. Accordingly, for at least reasons set forth above with respect to claim element [5.1], it is my opinion that Scherer discloses the features of claim element [20.7]. *See* Section IX.F. Additionally, the features disclosed by Scherer relevant to claim element [20.7] would be preserved in the modification of Scherer in view of Lee. *See* Section IX.A.

9. Element [20.8] – "wherein the depressible latch is received in the opening;"

332. Claim element [20.8] is identical to claim element [6.1]. Accordingly, for at least reasons set forth above with respect to claim element [6.1], it is my

opinion that Scherer discloses the features of claim element [20.8]. *See* Section IX.G. Additionally, the features disclosed by Scherer relevant to claim element [20.8] would be preserved in the modification of Scherer in view of Lee. *See* Section IX.A.

10. Element [20.9] – "wherein the depressible latch has a front end portion and rear end portion spaced apart along the longitudinal axis and wherein the depressible latch extends upward along the transverse axis as the depressible latch extends along the longitudinal axis from the front end portion to the rear end portion of the depressible latch;"

333. Claim element [20.9] is identical to claim element [7.1]. Accordingly, for at least reasons set forth above with respect to claim element [7.1], it is my opinion that Scherer discloses the limitations of claim element [20.9]. *See* Section IX.H. Additionally, the features disclosed by Scherer relevant to claim element [20.9] would be preserved in the modification of Scherer in view of Lee. See Section IX.A

11. Element [20.10] – "wherein the rear end portion of the depressible latch is spaced apart above the top portion of the connector housing along the transverse axis;"

334. Claim element [20.10] is identical to claim element [8.1]. Accordingly, for at least reasons set forth above with regard to claim element [8.1], it is my opinion that Scherer discloses the features of claim element [20.10]. *See* Section IX.I. Additionally, the features disclosed by Scherer relevant to claim

element [20.10] would be preserved in the modification of Scherer in view of Lee. *See* Section IX.A

12. Element [20.11] – "wherein the front end portion of the elongate arm includes an edge defining a front end of the opening;"

335. Claim element [20.11] is identical to claim element [9.1]. Accordingly, for at least reasons set forth above with respect to claim element [9.1], it is my opinion that Scherer discloses the features of claim element [20.11]. *See* Section IX.J. Additionally, the features disclosed by Scherer relevant to claim element [20.11] would be preserved in the modification of Scherer in view of Lee. *See* Section IX.A

13. Element [20.12] – "wherein the depressible latch has an upper surface, the edge opposing the upper surface;"

336. Claim element [20.12] is identical to claim element [10.1]. Accordingly, for at least reasons set forth above with respect to claim element [10.1], it is my opinion that Scherer discloses the features of claim element [20.12]. *See* Section IX.K. Additionally, the features disclosed by Scherer relevant to claim element [20.7] would be preserved in the modification of Scherer in view of Lee. *See* Section IX.A

14. Element [20.13] – "wherein the elongate arm is configured to be pulled rearward along the longitudinal axis with re-

> **spect to the connector housing whereby the edge slides longitudinally along the upper surface to depress the depressible latch."**

337. Claim element [20.13] is identical to claim element [14.1]. Accordingly, for at least reasons set forth above with respect to claim element [14.1], it is my opinion that Scherer in view of Lee renders obvious claim element [20.13]. *See* Section IX.L.

338. Accordingly, it is my opinion that a POSITA would have found it obvious to modify Scherer in view of Lee such that the entirety of claim 20 is rendered obvious for the reasons explained above with respect to claims 1, 4-10, and 14.

T. Claim 21

339. The subject matter of independent claim 21 is identical to the preamble claim 1 through element [1.5], except that instead of element [1.6], claim 21 adds the features of dependent claim 4 and another element related to the elongated arm and a push/pull tab. Assigning identical numbering to claim 21 as to claim 1, it is my opinion Scherer and Lee therefore render obvious the preamble through claim element [21.5] for the reasons explained above with regard to claim 1. *See* Sections IX.B.1-6. (*i.e.*, all elements of claim 1, except element [1.6]). Scherer also discloses the remaining two limitations of claim 21 as set forth below,

thus it is my opinion that a POSITA would also have found the features of claim 21 obvious over Scherer in view of Lee.

1. Preamble – "An optical fiber connector comprising:"

340. The preamble of claim 21 is identical to the preamble of claim 1. Accordingly, for at least reasons set forth above with regard to claim 1, it is my opinion that Scherer discloses the preamble of claim 21. *See* Section IX.B.1.

2. Element [21.1] – "first and second optical fiber ferrules;"

341. Claim element [21.1] is identical to claim element [1.1]. Accordingly, for at least reasons set forth above with regard to claim element [1.1], it is my opinion that Scherer in view of Lee renders obvious the limitations of claim element [21.1]. *See* Section IX.B.2.

3. Element [21.2] – "a connector housing having a front end portion and a rear end portion spaced apart along a longitudinal axis, the connector housing comprising a top portion and a bottom portion spaced apart along a transverse axis perpendicular to the longitudinal axis,"

342. Claim element [21.2] is identical to claim element [1.2]. Accordingly, for at least reasons set forth above with respect to claim element [1.2], it is my opinion that Scherer discloses the features of claim element [21.2]. *See* Section IX.B.3.

4. Element [21.3] – "the connector housing holding the first and second optical fiber ferrules such that the first and second optical fiber ferrules are exposed through the front end portion for making an optical connection and the first and

second optical fiber ferrules are spaced apart from one another along the transverse axis,"

343. Claim element [21.3] is identical to claim element [1.3]. Accordingly, for at least reasons set forth above with respect to claim element [1.3], it is my opinion that Scherer in view of Lee renders obvious the limitations of claim element [21.3]. *See* Section IX.B.4.

5. Element [21.4] – "a depressible latch above the top portion of the connector housing; and"

344. Claim element [21.4] is identical to claim element [1.4]. Accordingly, for at least reasons set forth above with respect to claim element [1.4], it is my opinion that Scherer discloses the features of claim element [21.4]. *See* Section IX.B.5. Additionally, the features disclosed by Scherer relevant to claim element [21.4] would be preserved in the modification of Scherer in view of Lee. *See* Section IX.A.

6. Element [21.5] – "an elongate arm connected to the connector housing above the top portion and configured to be pulled to actuate the depressible latch;"

345. Claim element [21.5] is identical to claim element [1.5]. Accordingly, for at least the reasons set forth above with respect to claim element [1.5], it is my opinion that Scherer discloses the features of claim element [21.5]. *See* Section IX.B.6. Additionally, the features disclosed by Scherer relevant to claim element [21.5] would be preserved in the modification of Scherer in view of Lee. *See* Section IX.A.

7. Element [21.6] – "wherein the elongate arm comprises a front end portion and a rear end portion spaced apart along the longitudinal axis;"

346. Claim element [21.6] is identical to claim element [4.1]. Accordingly, for at least reasons set forth above with regard to claim element [4.1], it is my opinion that Scherer discloses the features of claim element [21.6]. *See* Section IX.E. Additionally, the features disclosed by Scherer relevant to claim element [21.6] would be preserved in the modification of Scherer in view of Lee. *See* Section IX.A.

8. Element [21.7] – "the optical fiber connector further comprising a push/pull tab extending from the rear end portion of the elongate arm."

347. For at least the reasons below, it is my opinion that, a POSITA would have understood Scherer discloses the features of claim element [21.7]. *See* EX1003, ¶54, FIG. 14.

348. The '369 Patent provides several examples of "push-pull tabs" throughout its description and figures. *See, e.g.*, EX1001, FIGS. 4-11 (showing examples of push-pull tabs 410-1110), 19A-D (push-pull tabs 1930, 1960), FIG. 31 (push-pull tab 2107), FIG. 44A (push-pull tab 3707), FIGS. 53-61 (disclosing various push-pull tabs); *see also generally* EX1001 (describing these embodiments in the specification). The '369 Patent further explains that "[a]s would be

understood by one skilled in the art, the push-pull tab 410 enables removal of the connector from a receptacle without requiring additional tools." EX1001, 7:35-38.

349. Therefore, I believe a POSITA would have understood an end portion of the elongate arm configured to be grasped (*e.g.*, pinched or held by a user's fingers) for pushing and pulling the elongate arm would be a "push/pull tab," as recited in this claim.

350. As the '369 Patent itself discloses several different types of push/pull tabs, I do not believe that a POSITA would have understood the claimed push/pull tab to require any particular structure or configuration; rather, it simply must extend from the rear portion of the elongate arm and allow a user to push/pull the elongate arm.

351. Finally, I note that the '369 Patent does not provide any further explanation regarding the push/pull tab "extending from the rear portion of the elongate arm." *See generally* EX1001.

352. Based on the examples of push-pull tabs provided in the specification, I believe that a POSITA would have understood the push-pull tab could be the very final protruding component (*e.g.*, as the labeling of Figures 19A-D of the '369 Patent indicates) or could include a portion of the elongated structure (*e.g.*, as the labeling of Figures 53-61 of the '369 Patent indicates).

353. Scherer discloses a push-pull tab according to either definition.

354. Specifically, Scherer's extender 330d terminates in a "push-pull tab," as claimed, that extends from the rear end of the elongate arm (extender 330d).

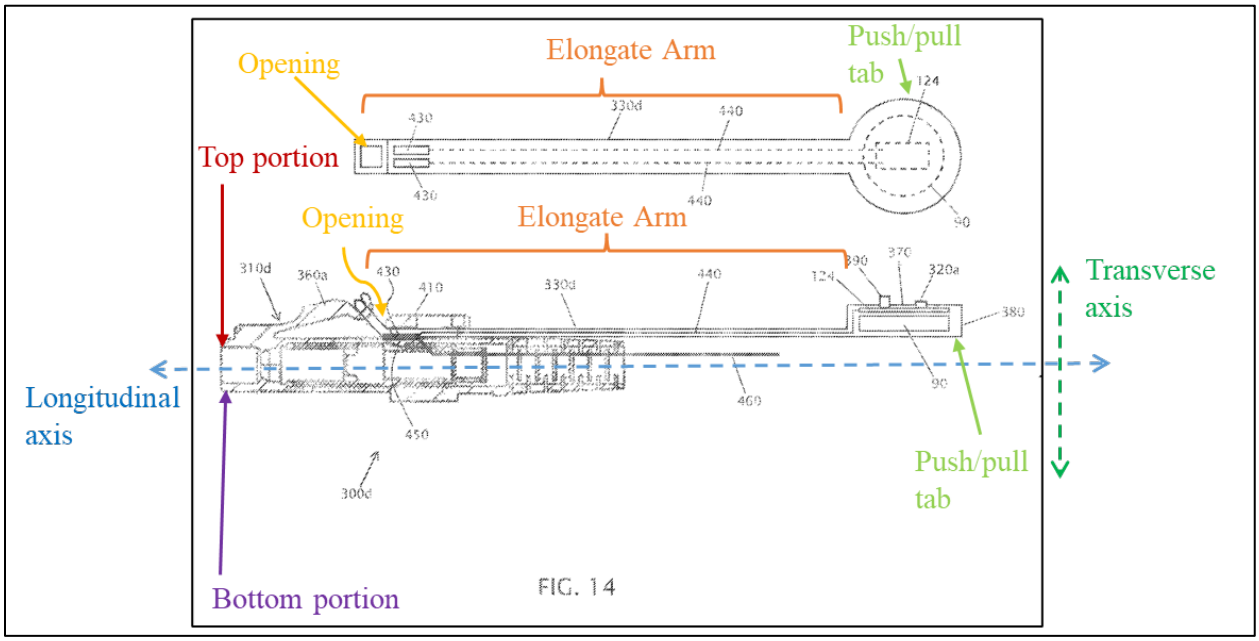

EEX1003, FIG. 14 (annotated).

355. Scherer also discloses that the extender 330d is configured to be pulled. EX1003, ¶¶51, 54, FIGS. 11-14. Scherer states that the cables 300a, 300b, 300c depicted in Figures 11-13 include connector hoods 310a, 310b, 310c, and that the hoods "each include[] an extender or remote release tab (330a, 330b, 330c) which improves the ease of releasing the respective connector… because the extender or remote release tab can simply be pulled by a user… to laterally compress the lever(s) (360)." EX1003, ¶51.

356. The foregoing description of the function of the extenders 330a, 330b, 330c applies equally to the extender 330d of connector hood 310d both because all

four extenders 330a, 330b, 330c, 330d are illustrated as having the same structure and because Scherer states "[c]able 300d is similar to cable 300c with the primary exception that cable 300d includes only a single fiber optic cable." EX1003, ¶54, FIGS. 11-14.

357. Figures 13 and 14 are reproduced below for comparison.

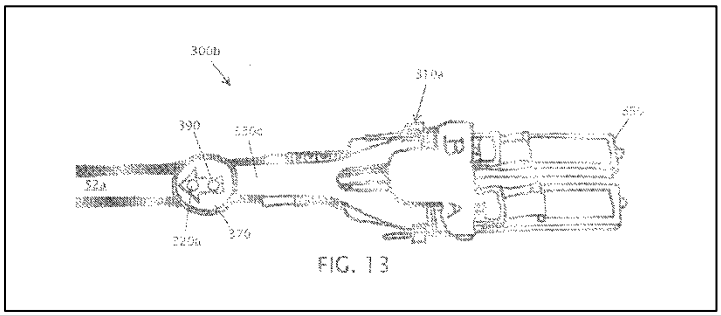

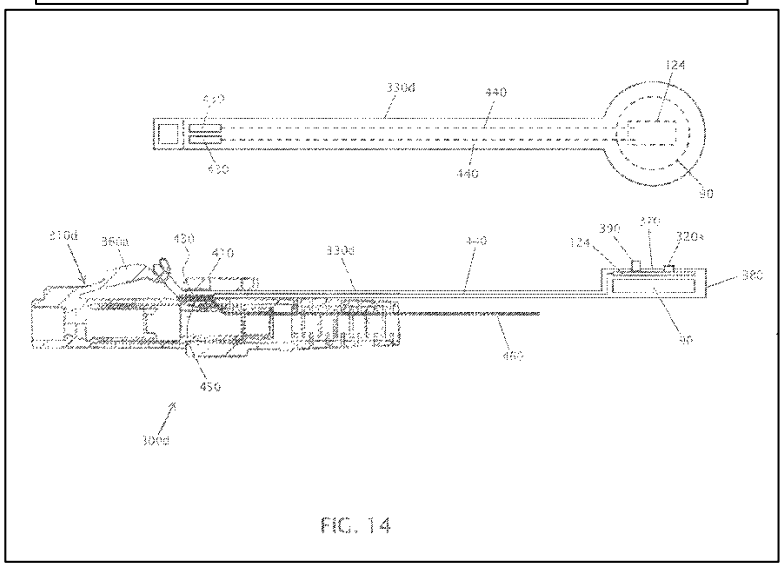

EX1003, FIGS. 13, 14.

358. Accordingly, it is my opinion hat a POSITA would have understood Scherer discloses claim element [21.7]. Therefore, it is my opinion that a POSITA would have found it obvious to modify the connector of Scherer in view of Lee such that the entirety of claim 21 is rendered obvious over Scherer in view of Lee.

X. GROUND 2: SCHERER IN VIEW OF LEE AND FURTHER IN VIEW OF GNIADEK RENDERS OBVIOUS CLAIMS 18, 19, AND 22

A. Motivation to Combine

1. Scherer and Lee

359. As described above in Section IX.R, it is my opinion that Scherer in view of Lee renders obvious claim 17, from which claims 18 and 19 depend. *See* Section IX.R. Scherer discloses a connector body 400 and a boot 420 providing a front body and a back body, respectively, of a connector housing. *See* Section IX.R; EX1003, ¶54, FIG. 14.

360. Patent Owner may allege that Scherer in view of Lee does not expressly disclose wherein a front body of a connector housing includes a recess and a back body of the connector housing comprises a protrusion received in the recess to connect the back body to the front body. However, this was well known from Gniadek which was incorporated by reference into Scherer.

2. Gniadek

361. Gniadek discloses an optical fiber connector assembly 800 including a connector 816 and a boot 840. Section VII.C; EX1010, 16:20-30 and 17:2-11. The connector 816 includes a trap 828, and the boot 840 includes a protruding member 851 configured to be received in the trap 828 to connect the boot 840 to the connector 816. EX1010, 17:2-11.

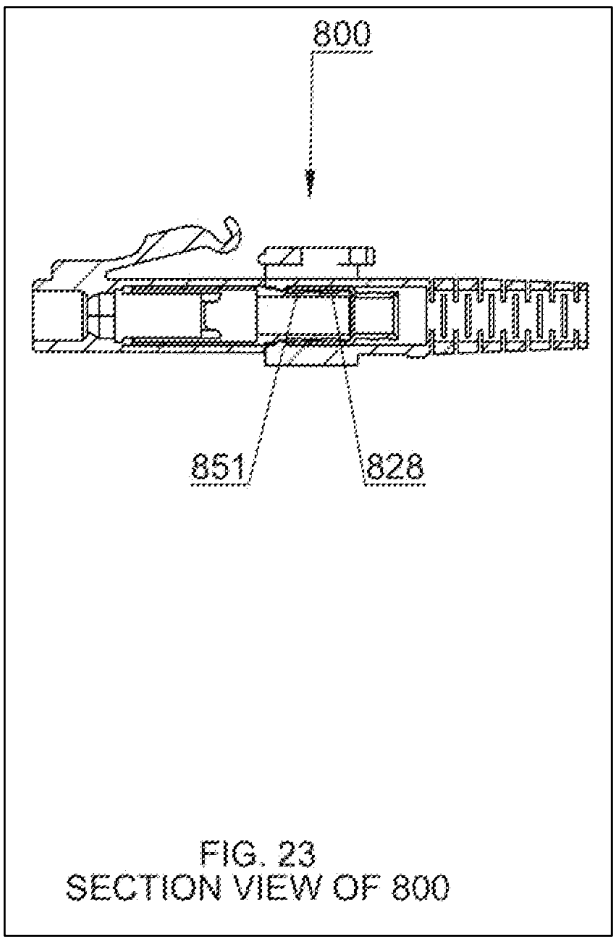

EX1010, FIG. 23.

3. Reasons to Combine

362. A POSITA would have found it obvious to modify the front body and back body of the connector housing disclosed in Scherer-Lee to include a trap and protruding member, respectively, alike to the Gniadek's trap 828 and protruding member 851, to couple the front body and back body together.

363. A POSITA would have found this modification obvious because Scherer incorporates Gniadek by reference and then compares its optical fiber connector hoods 310a, 310b, 310c, 310d to those disclosed in Gniadek, "which is

incorporated by reference to the extent it provides details of various versions of remote-release connectors." EX1003, ¶¶51, 54. Specifically, Scherer explains "[e]ach of connector hoods 310a, 310b, 310c are similar in some respects to the remote-release connectors disclosed in U.S. Patent No. 8,465,317." EX1003, ¶51. Scherer specifically compares Figure 14 to Gniadek. EX1003, ¶54.

364. A POSITA would have had a reasonable expectation of success in making this modification because Scherer explicitly states that its connectors are similar to Gniadek's. EX1003, ¶¶51, 54. Additionally, the POSITA would understand that Scherer's connector of Figure 14, and Gniadek's connector of Figures 21-23 are connectors of very similar styles from the visible similarities between them, and that features could therefore be carried from Gniadek's connector to the connector of Scherer in view of Lee and continue to serve the same purpose.

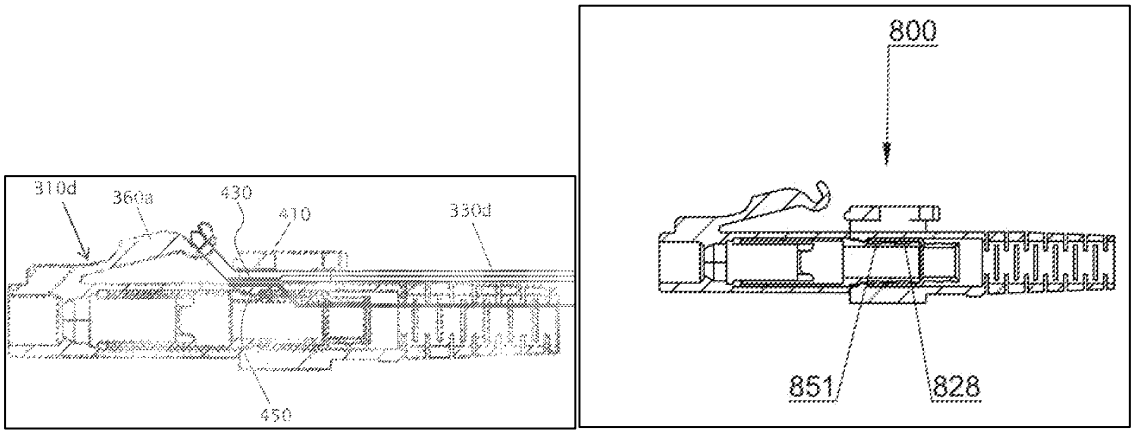

EX1003, FIG. 14 (left, excerpt); EX1010, FIG. 23 (right).

B. Claim 18

1. Preamble – "The optical fiber connector as set forth in claim 17, wherein"

365. Claim 18 depends on claims 1, 4-10, 14-15, and 17 and for at least the reasons discussed above in reference to claim 1, claims 4-10, 14-15, and 17, Scherer in view of Lee renders obvious claim 1, claims 4-10, 14-15, and 17. *See* Sections IX.B, IX.E-L, IX.P, IX.R. Additionally, for at least the reasons below, it is my opinion that Scherer in view of Lee further in view of Gniadek renders obvious claim 18 of the '369 Patent.

2. Element [18.1] – "the front body includes a recess and the back body includes a protrusion received in the recess to connect the back body to the front body."

366. For at least the reasons below, Gniadek discloses the additional features of claim element [18.1], and it would have been obvious to further modify the combination of Scherer and Lee in view of Gniadek to have these features. *See* Section X.A.

367. As noted above, the portion of Scherer's connector hood 310d that defines a connector housing comprises a front body and a back body. Section IX.M; EX1003, ¶¶35, 54, FIG. 14.

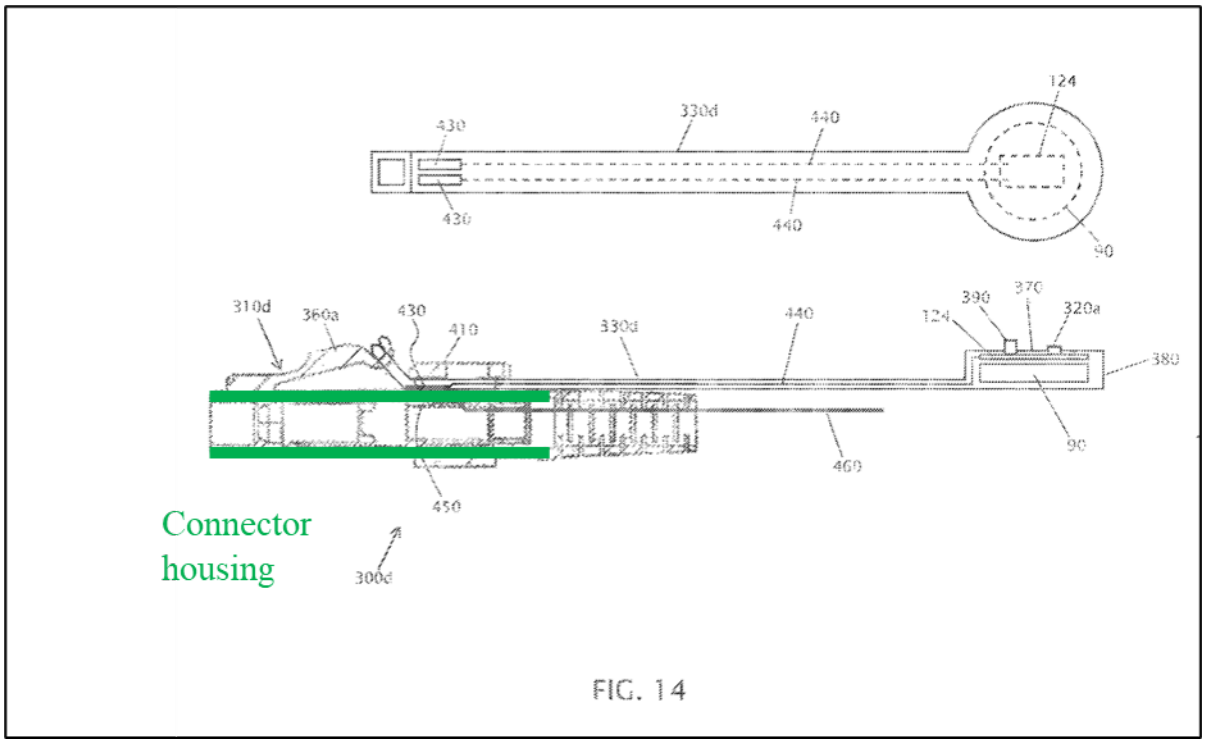

EX1003, FIG. 14 (annotated).

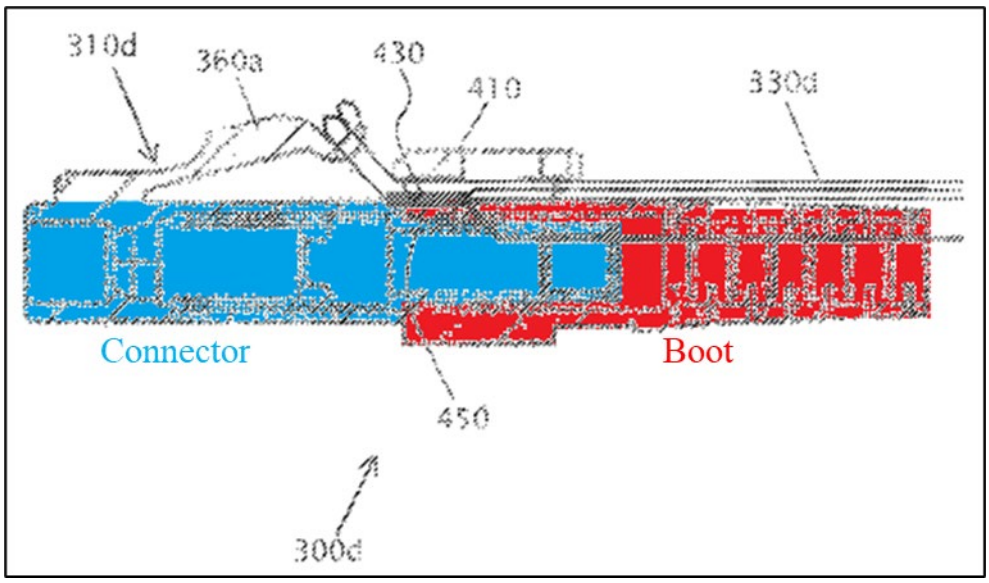

EX1003, FIG. 14 (annotated, excerpt).

368. Patent Owner may contend that Scherer in view of Lee does not expressly disclose wherein the back body includes a protrusion that is received in a

recess defined in the front body to connect the back body to the front body. However, such features were well known as demonstrated in Gniadek.

369. Gniadek discloses, in relevant part, a "push-pull cable assembly 800" that resembles Scherer's connector hoods, particularly connector hood 310d. EX1010, 16:15-17, FIGS. 21-24.

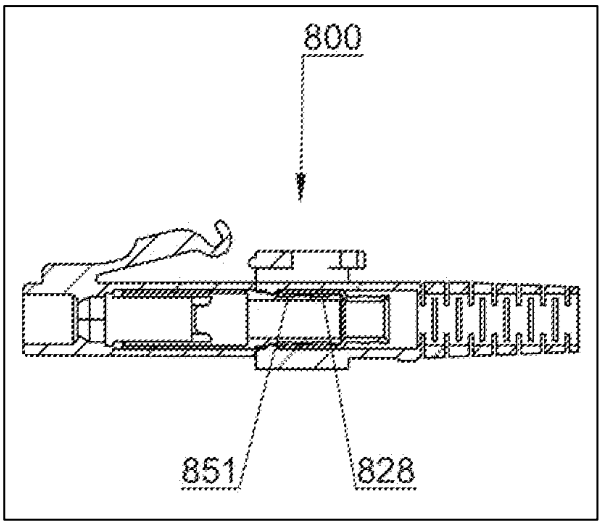

EX1010, FIG. 23.

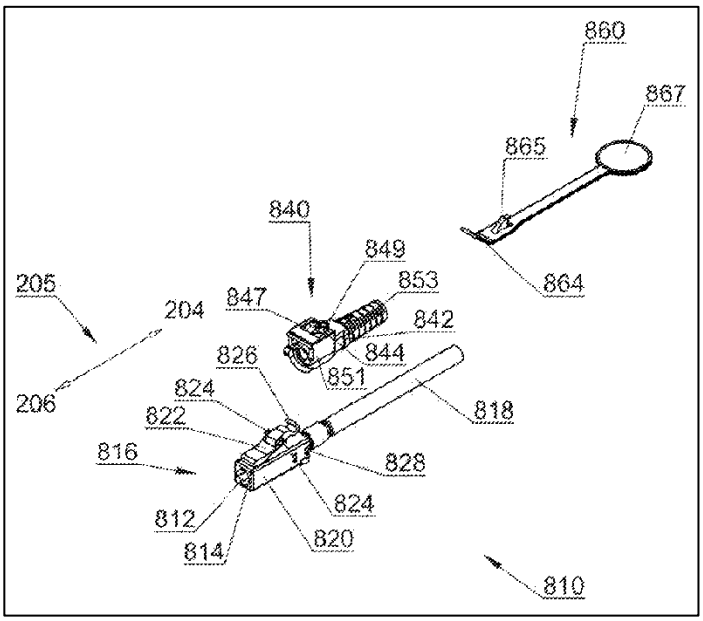

EX1010, FIG. 22.

370. Gniadek states that "the cable assembly 810 generally includes a latching connector 816, a transmission medium 812, a jacket 818, and a trap 828," while "[t]he boot 840 can generally include and is attached to a strain relief 842, a passageway 844, a stop space 847, a restoring member 849, a protruding member 851, and a flexible membrane 853." EX1010, 16:18-20, 16:34-37. "The protruding member 851 is configured to cooperate with the trap 828 to restrict the movement of the boot 840 along the coupling axis," EX1010, 17:9-11, so the trap 828 acts as a recess in a front body (cable assembly 810) while the protruding member 851 acts as a protrusion of a back body (boot 840) configured to be received in the trap 828 to connect the cable assembly 810 and the boot 840.

371. A POSITA would have found it obvious to modify Scherer's connector hood 310d to include Gniadek's protruding member 851 and trap 828 respectively in the front body and back body of the connector housing provided by Scherer's connector hood 310d, and would have expected to find success in doing so, from Scherer's multiple references to Gniadek and the similarity of Scherer's Figure 14 to Gniadek's Figure 23.

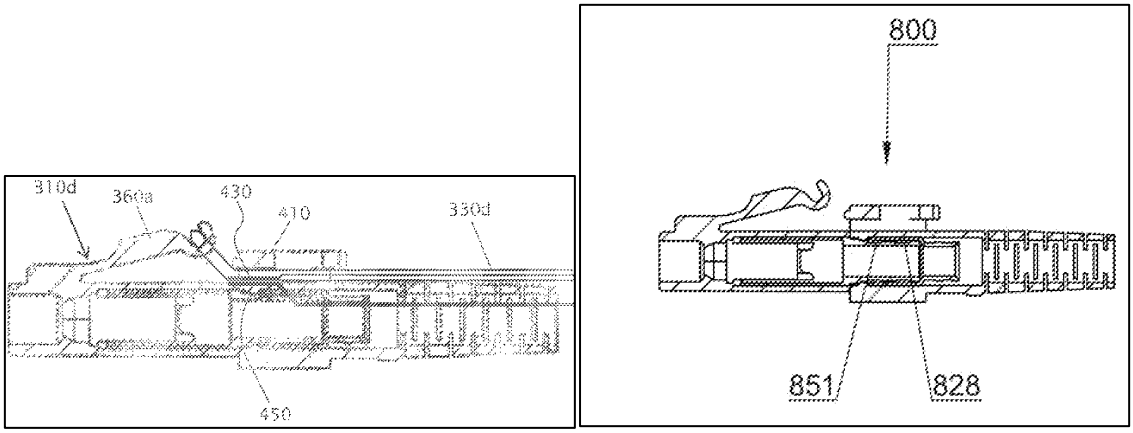

EX1003, FIG. 14 (left, excerpt); EX1010, FIG. 23 (right).

372. Accordingly, I believe Gniadek discloses the additional features of claim [18.1], and that a POSITA would therefore have found claim 18 obvious over Scherer in view of Lee and Gniadek.

C. Claim 19

1. Preamble – "The optical fiber connector as set forth in claim 18,"

373. laim 19 depends on claims 1, 4-10, 14-15, and 17-18 and for at least the reasons discussed above in reference to claim 1, claims 4-10, 14-15, and 17, the Scherer in view of Lee renders obvious claim 1, claims 4-10, 14-15, and 17. *See* Section IX.B, IX.E-L, IX.P, IX.R. Further, the combination of Scherer, Lee, and Gniadek renders obvious claim 18. *See* Section X.B. Additionally, for at least the reasons below, it is my opinion that Scherer in view of Lee further in view of Gniadek renders obvious claim 19 of the '369 Patent.

2. Element [19.1] – "further comprising a single cable boot extending rearward from the connector housing."

374. Claim element [19.1] is identical to claim element [13.1]. Accordingly, for at least reasons set forth above with regard to claim element [13.1], it is my opinion that Scherer in view of Lee discloses the features of claim element [19.1]. *See* Section IX.O. Additionally, the features disclosed by Scherer relevant to claim element [19.1] would be preserved in the modification of Scherer in view of Lee further in view of Gniadek. *See* Section IX.A.

D. Claim 22

375. The subject matter of independent claim 22 simply combines preceding claim elements that I have already addressed in Scherer, Lee, and Gniadek. Specifically, claim 22 recites the same features as the preamble of claim 1 through claim element [1.5] in addition to the features of dependent claims 11 and 18. Therefore, I incorporate the applicable sections by reference. *See* Sections IX.B.1-6, IX.M, X.B. (*i.e.*, all elements of claim 1, except element [1.6], and dependent claims 11 and 18). Accordingly, for at least the reasons set forth above and those below, it is my opinion that a POSITA would also have found the features of claim 22 obvious over Scherer in view of Lee further in view of Gniadek.

1. Preamble – "An optical fiber connector comprising:"

376. The preamble of claim 22 is identical to the preamble of claim 1. Accordingly, for at least reasons set forth above with respect to the preamble of claim 1, it is my opinion that Scherer discloses the preamble to claim 22. *See* Section IX.B.1.

2. Element [22.1] – "first and second optical fiber ferrules;"

377. Claim element [22.1] is identical to claim element [1.1]. Accordingly, for at least reasons set forth above with respect to claim element [1.1], it is my opinion that Scherer in view of Lee renders obvious the features of claim element [22.1]. *See* Section IX.B.2.

3. Element [22.2] – "a connector housing having a front end portion and a rear end portion spaced apart along a longitudinal axis, the connector housing comprising a top portion and a bottom portion spaced apart along a transverse axis perpendicular to the longitudinal axis,"

378. Claim element [22.2] is identical to claim element [1.2]. Accordingly, for at least the reasons set forth above with respect to claim element [1.2], it is my opinion that Scherer discloses the features of claim element [22.2]. *See* Section IX.B.3.

4. Element [22.3] – "the connector housing holding the first and second optical fiber ferrules such that the first and second optical fiber ferrules are exposed through the front end portion for making an optical connection and the first and

second optical fiber ferrules are spaced apart from one another along the transverse axis,"

379. Claim element [22.3] is identical to claim element [1.3]. Accordingly, for at least reasons set forth above with respect to claim element [1.3], it is my opinion that Scherer in view of Lee renders obvious the features of claim element [22.3]. *See* Section IX.B.4.

5. Element [22.4] – "a depressible latch above the top portion of the connector housing; and"

380. Claim element [22.4] is identical to claim element [1.4]. Accordingly, for at least reasons set forth above with respect to claim element [1.4], Scherer discloses the features of claim element [22.4]. *See* Section IX.B.5. Additionally, the features disclosed by Scherer relevant to claim element [22.4] would be preserved in the modification of Scherer in view of Lee. *See* Section IX.A.

6. Element [22.5] – "an elongate arm connected to the connector housing above the top portion and configured to be pulled to actuate the depressible latch;"

381. Claim element [22.5] is identical to claim element [1.5]. Accordingly, for at least reasons set forth above with respect to claim element [1.5], it is my opinion that Scherer discloses the features of claim element [22.5]. *See* Section IX.B.6. Additionally, the features disclosed by Scherer relevant to claim element [22.5] would be preserved in the modification of Scherer in view of Lee. See Section IX.A.

7. Element [22.6] – "wherein the connector housing includes a front body and a back body;"

382. Claim element [22.6] is identical to claim element [11.1]. Accordingly, for at least reasons set forth above with respect to claim element [11.1], it is my opinion that Scherer discloses the features of claim element [22.6]. *See* Section IX.M. Additionally, the features disclosed by Scherer relevant to claim element [22.6] would be preserved in the modification of Scherer in view of Lee. See Section IX.A.

8. Element [22.7] – "wherein the front body includes a recess and the back body includes a protrusion received in the recess to connect the back body to the front body."

383. Claim element [22.7] is identical to claim element [18.1]. Accordingly, for at least reasons set forth above with respect to claim element [18.1], it is my opinion that Gniadek discloses the features of claim element [22.7], and that it would have been obvious to further modify Scherer in view of Lee further in view of Gniadek to include these features. *See* Section X.A-B.

384. Therefore, it is my opinion that a POSITA would have found it obvious to modify the connector of Scherer in view of Lee further in view of Gniadek such that the entirety of claim 22 is rendered obvious over Scherer in view of Lee further in view of Gniadek.

XI. GROUND 3: LEE ANTICIPATES CLAIMS 1-17, 20-21

385. For at least the reasons discussed below, it is my opinion that Lee expressly discloses all of the features in claims 1-17, and 20-21 of the ’369 Patent. Additionally, to the extent any feature in claims 1-17, and 20-21 of the ’369 Patent is not expressly disclosed, I believe a POSITA would have understood that any alleged missing feature is inherently disclosed (*i.e.*, necessarily present based on the disclosure) in Lee. Therefore, I believe these claims are invalid because they were anticipated by Lee.

386. I provide a more detailed discussion regarding the disclosures and teachings in Lee relative to the claim limitations of the ’369 Patent below. Each limitation of claims 1-17, and 20-21 of the ’369 Patent is presented below in bold text followed by my analysis of that part of the claim. Many of the claim limitations are identical or nearly identical, and so I refer to the portion of my report providing the substantive analysis for identical or near identical limitations.

A. Claim 1

1. Preamble – “An optical fiber connector comprising:”

387. In my opinion, Lee discloses an optical fiber connector. EX1004, ¶2 (“This disclosure relates generally to fiber optic connectors, and more particularly fiber optic connectors suitable for use in data centers or the like.”) Lee discloses numerous embodiments of optical fiber connectors and claims fiber optic connectors. *See, e.g.,* EX1004, ¶¶5-12, claims 1-34.

388. For example, Lee illustrates an optical fiber connector in Figure 1.

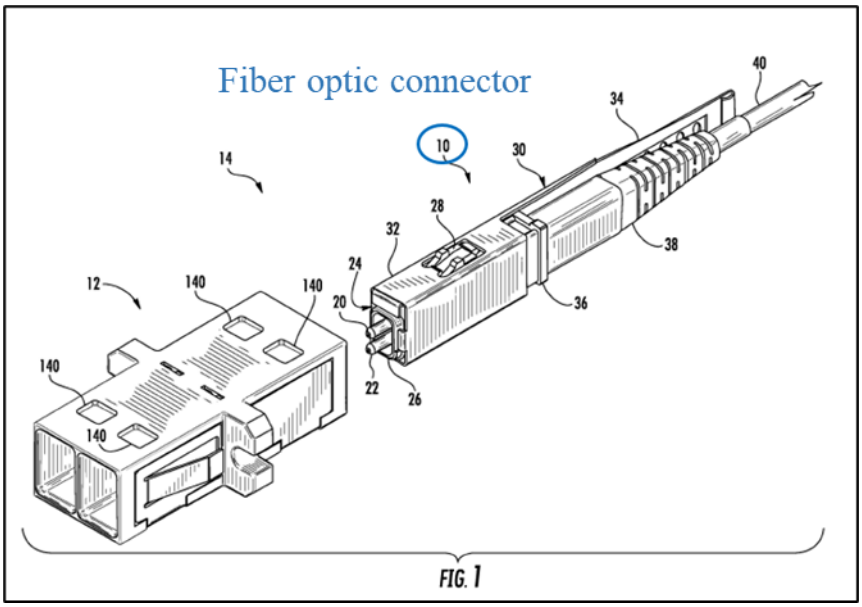

EX1004, FIG. 1 (annotated).

389. A POSITA would have readily understood that Figure 1 shows a fiber optic connector 10 that is designed, for example, to be inserted into the adapter 12. Further, Lee explains that "Fig. 1 illustrates one example of a fiber optic connector 10 (also referred to as 'optical connector 10' or simply 'connector 10') and an adapter 12," and that "the connector 10 is particularly suitable for data centers and other environments where many connections are desired in small spaces." EX1004, ¶29. This is the same type of optical fiber connector as disclosed in the '369 Patent. *See*, *e.g.,* EX1001, Abstract, 1:34-2:57 (explaining the need for high-density interconnects in data centers and disclosing an optical connector), FIGS. 18A-19D (illustrating example embodiments of an optical fiber connector).

390. Accordingly, it is my opinion that a POSITA would have understood Lee discloses the preamble of claim 1.

2. Element [1.1] – "first and second optical fiber ferrules;"

391. For at least the reasons discussed below, it is my opinion that Lee discloses claim element [1.1]. *See*, e.g., EX1004, ¶6 ("[A] fiber optic connector like the one mentioned above may include at least two ferrules. For example, a fiber optic connector may comprise first and second ferrules each configured to support at least one optical fiber".) Figures 1-10 and 12-14 all illustrate fiber optic connectors with first and second optical fiber ferrules. See EX1004, FIGS. 1-10 and 12-14. I have annotated Figure 1 below to identify optical fiber ferrules 20, 22.

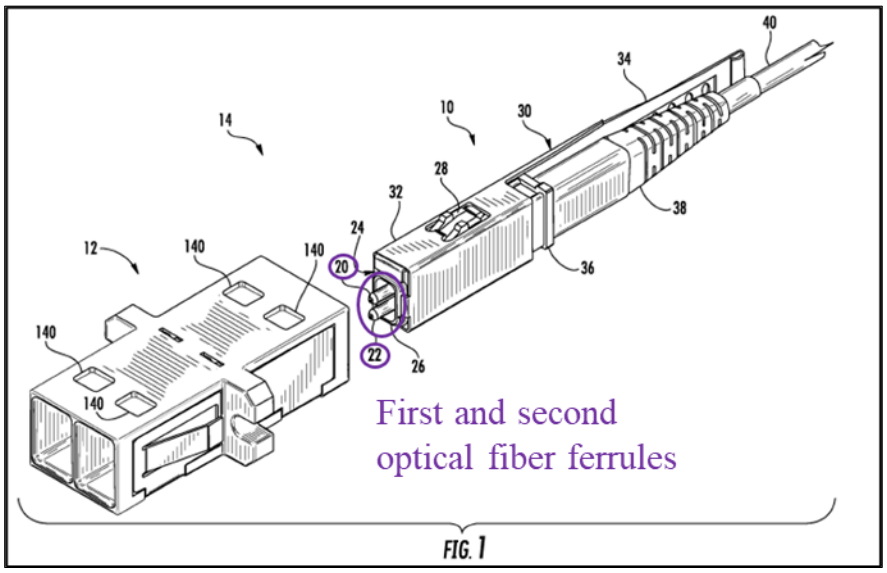

EX1004, FIG. 1 (annotated).

392. Lee explains in reference to Figure 1 that "the connector 10 includes first and second ferrules 20, 22, an inner connector body 24 having a front end 26 from which the first and second ferrules extend…." EX1004, ¶30. The ferrules 20, 22 can also be seen in my annotated figure above.

393. The '369 Patent describes first and second optical fiber ferrules of the same type as in Lee. *See*, *e.g.,* EX1001, 6:64-7:43, 12:38-46, FIGS. 3, 4, 19A-D. For example, Lee discloses two optical fiber ferrules at least in the same manner as shown in Figure 19A.

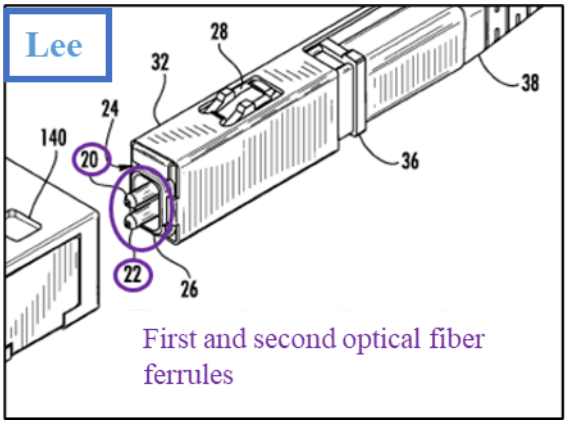

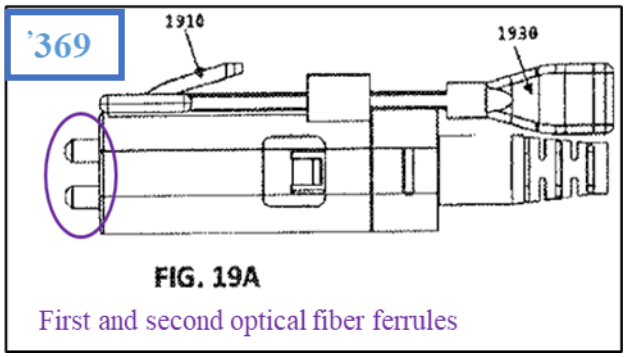

EX1004, FIG. 1, (annotated, excerpt); EX1001, FIG. 19A, (annotated).

394. Accordingly, it is my opinion that a POSITA would have understood Lee discloses the features of claim element [1.1].

3. Element [1.2] – "a connector housing having a front end portion and a rear end portion spaced apart along a longitudinal axis, the connector housing comprising a top portion

and a bottom portion spaced apart along a transverse axis perpendicular to the longitudinal axis,"

395. For at least the reasons below, it is my opinion Lee discloses claim element [1.2]. Lee discloses a connector housing having a front end, rear end, top, and bottom portion along the axes recited in this claim. *See*, *e.g.*, EX1004, ¶29, FIGS. 1-5. In particular, I believe a POSITA would have understood that Lee's "outer connector body 36 coupled to the inner connector body 24" collectively defines a "connector housing" as used in this claim. EX1004, ¶30.

396. Two components being coupled together to form the claimed "connector housing" is consistent with how the '369 Patent describes and claims a connector housing. *See*, *e.g.,* EX1001, 7:1-10 (disclosing the front body 302 is "securely fastened" to the back body 306), 8:23-40 (discussing different embodiments of front bodies connected to back bodies), 8:58-61 (same), 9:7-10 (same), 10:60-63 (same), 14:10-16 (discussing secure fastening of the front and back bodies); Cls. 11, 17 ("wherein the connector housing includes a front body and a back body"), Cl. 18 (further defining the connection between the front and back bodies via a protrusion and recess).

397. Similarly, Lee describes that the inner connector body 24 and the outer connector body 36 are coupled together to collectively form a connector housing. *See*, *e.g.,* EX1004, ¶30 ("The connector 10 also includes an outer connector body 36 coupled to the inner connector body 24 within the housing

portion 32 of the handle 30"). The first and second optical fibers 86, 88 pass through this collective housing and include the ferrules 20, 22 at the forward end of the connector housing. *See* EX1004, FIGS. 1-3, ¶38 ("It can be appreciated from Figs. 2 and 3, however, that the outer connector body 36 being coupled to the inner connector body 24 results in the first and second inner springs 100, 102 extending within the inner connector body 24 and outer connector body 36, biasing the first and second ferrules 20, 22 in a forward direction."). For example, Lee describes "[t]he outer connector body 36 may be coupled to the inner connector body 24 in any suitable manner." EX1004, ¶39. Lee explains several embodiments of connecting the outer connector body 36 and inner connector body 24 to one another. *See* EX1004 (describing, e.g., latching features and openings that facilitate coupling the inner connector body 24 and the outer connector body 36).

398. Figure 3 further shows the inner connector body 24 and the outer connector body 36 collectively define a connector housing for the first and second optical fibers 86, 88 and first and second ferrules 20, 22.

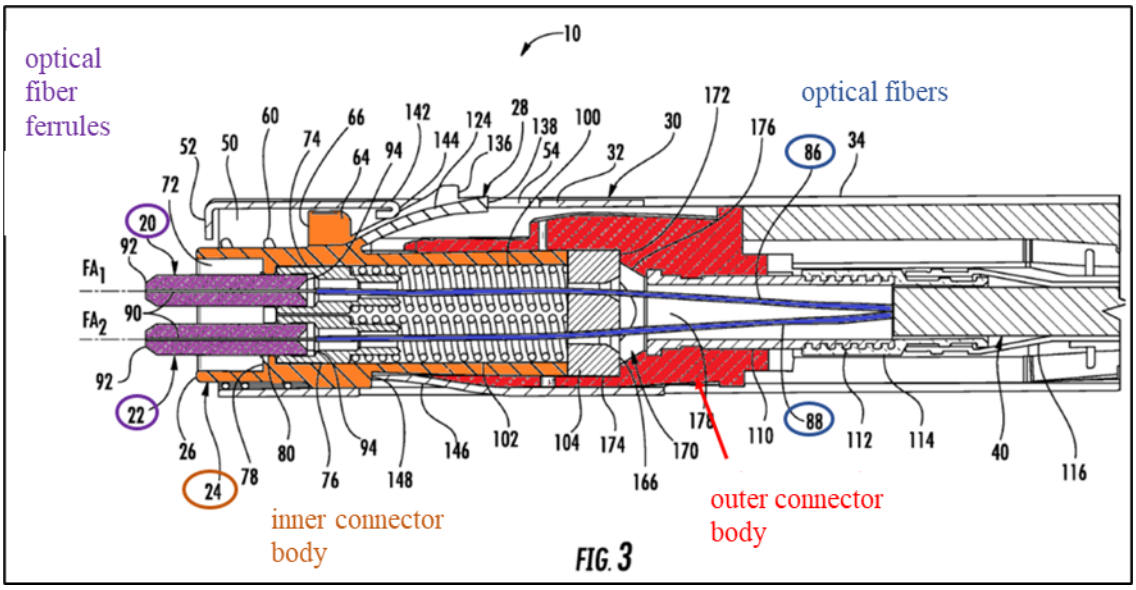

EX1004, FIG. 3 (annotated).

399. I believe a POSITA would further have understood Lee to disclose a connector housing comprised of the inner connector body 24 and outer connector body 36 in Figures 1 and 2.

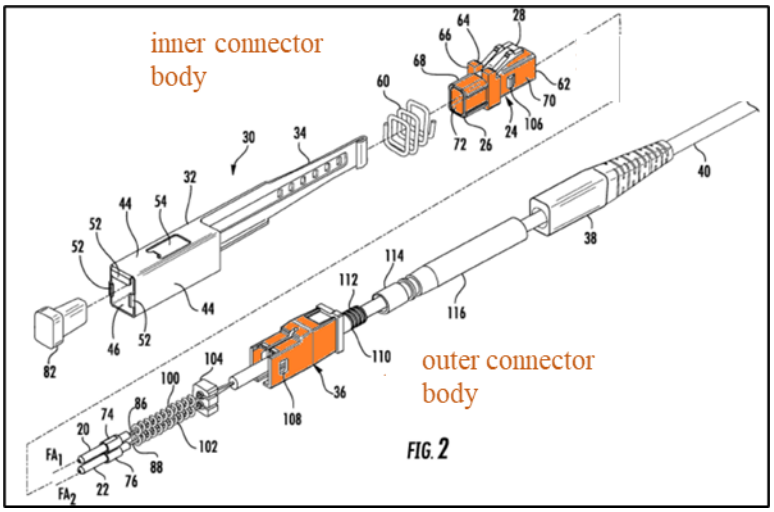

EX1004, FIG. 2 (annotated).

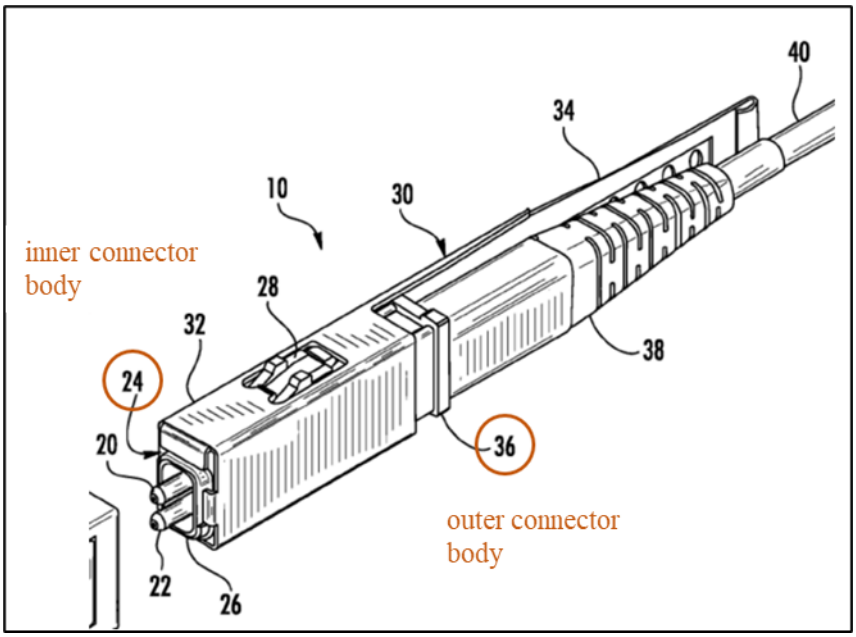

EX1004, FIG. 1 (annotated, excerpt).

400. Lee's inner connector housing 24 and outer connector housing 36 collectively define a connector housing that includes a front end portion and a rear end portion spaced apart along a longitudinal axis, for example, as shown in Figure 2.

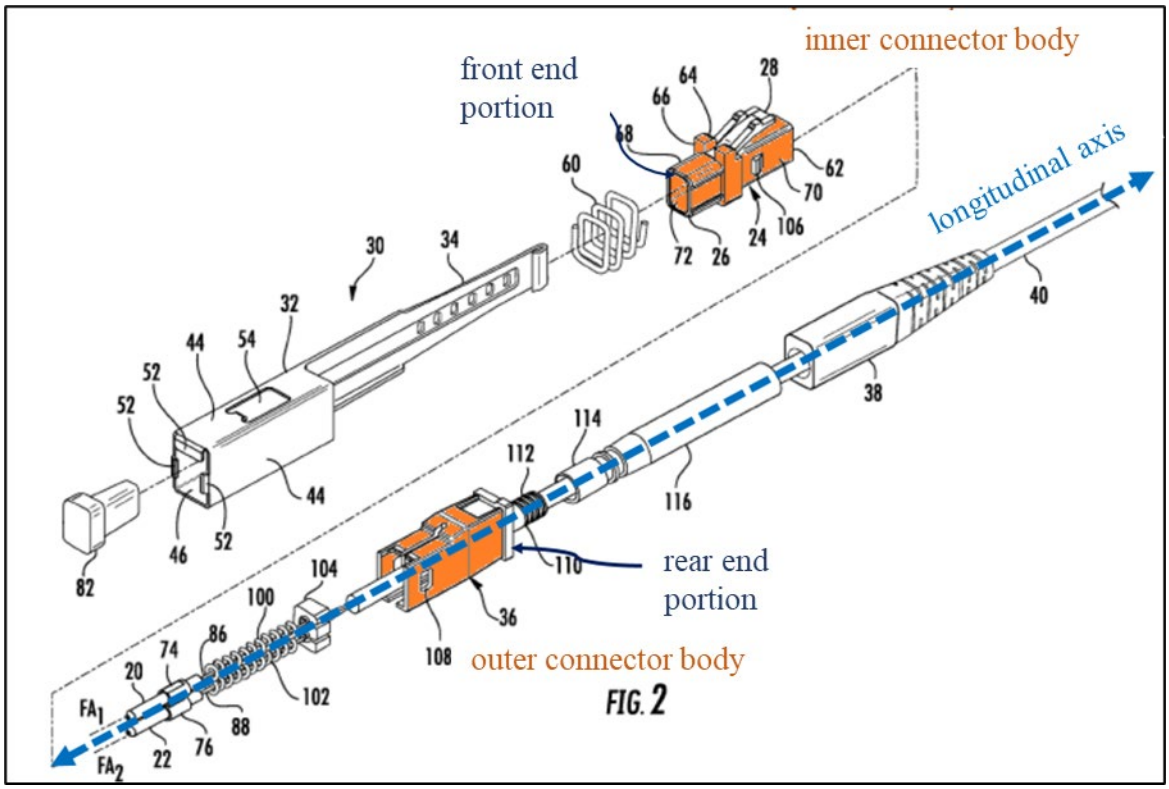

EX1004, FIG. 2 (annotated).

401. A POSITA would have understood that the front body 24 of the connector housing includes a front end portion that is spaced apart along the longitudinal axis from a rear end portion of the back body 36 of the connector housing. Figure 1 illustrates the front and back bodies 24, 36 connected together in this manner and having the front end portion and rear end portions in their assembled configuration.

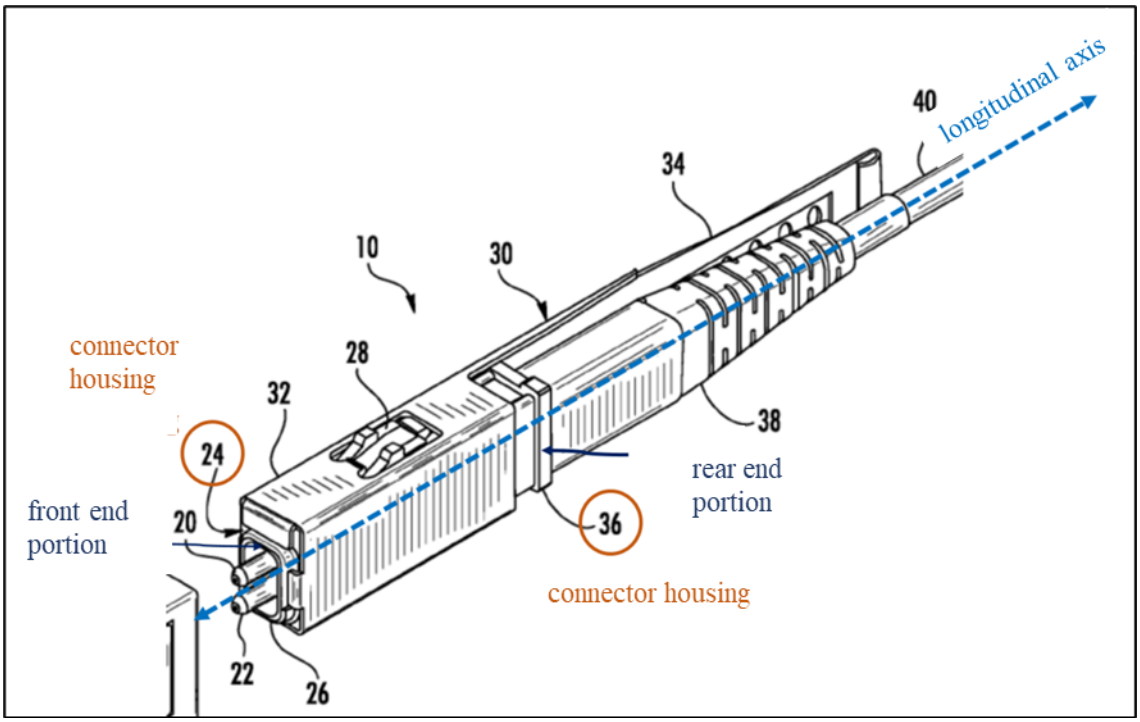

EX1004, FIG. 1 (annotated, excerpt).

402. Further, in my opinion, a POSITA would have readily understood Lee's connector housing comprises a top portion and a bottom portion spaced apart along a transverse axis perpendicular to the longitudinal axis, for example, as shown in Figure 2.

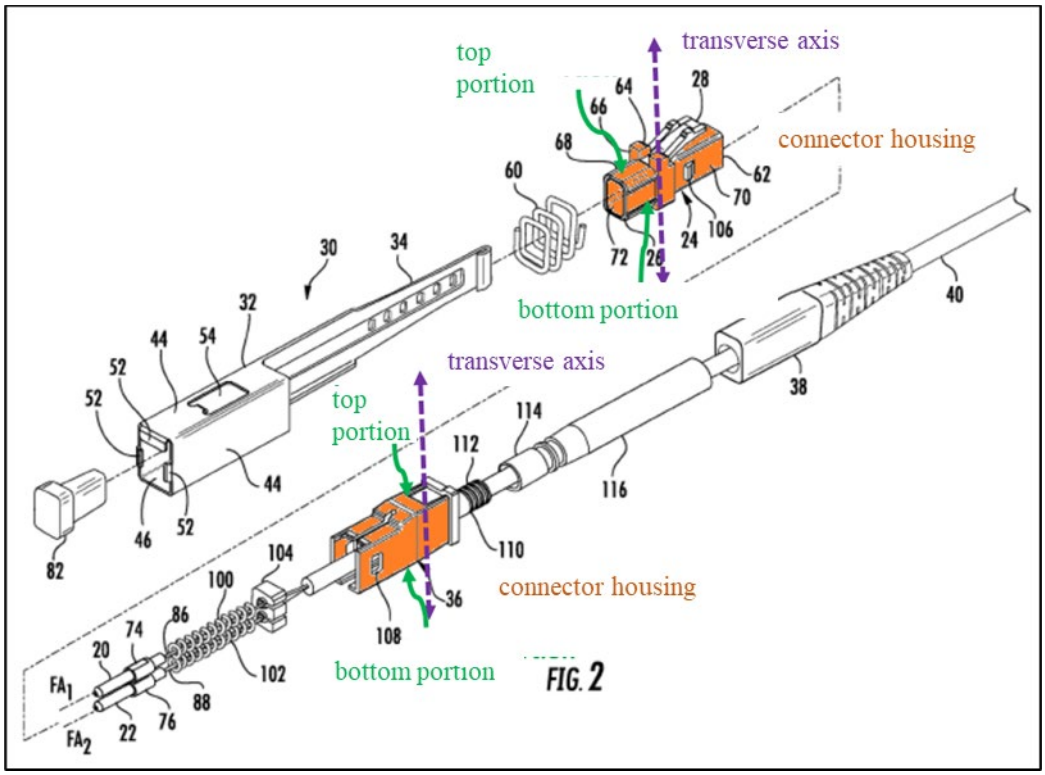

EX1004, FIG. 2 (annotated).

403. I believe a POSITA would have understood that the front body 24 and the back body 36 collectively include a top portion and a bottom portion when assembled, which are spaced apart along a transverse axis that is perpendicular to the longitudinal axis as shown in Figure 1.

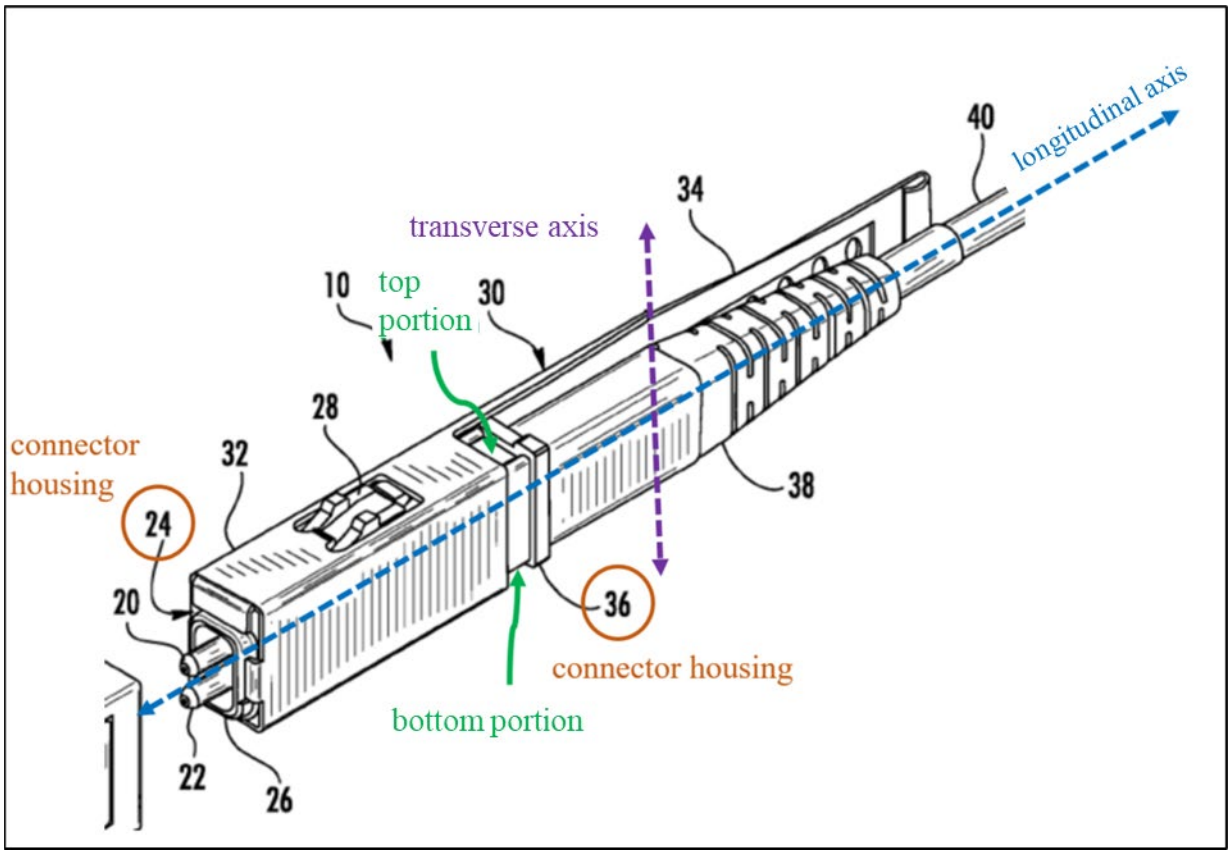

EX1004, FIG. 1(annotated, excerpt).

404. Accordingly, it is my opinion that a POSITA would have understood Lee discloses the features of claim element [1.2].

4. Element [1.3] – "the connector housing holding the first and second optical fiber ferrules such that the first and second optical fiber ferrules are exposed through the front end portion for making an optical connection and the first and second optical fiber ferrules are spaced apart from one another along the transverse axis,"

405. For at least the reasons below, it is my opinion that Lee discloses the limitations of claim element [1.3]. Lee discloses that a connector housing holding the first and second optical fiber ferrules such that the ferrules are exposed through the front end portion for making an optical connection and further that the first and

second optical fiber ferrules are spaced apart from one another along the transverse axis recited in this claim. *See*, *e.g.,* EX1004, FIGS. 1-3, 5.

406. For example, I believe a POSITA would have understood Figures 3 and 5 of Lee to illustrate the connector housing (which includes the inner connector body 24 and the outer connector body 36 as I explained above) holding the first and second optical fiber ferrules, and that the first and second optical fiber ferrules are exposed through the front end portion.

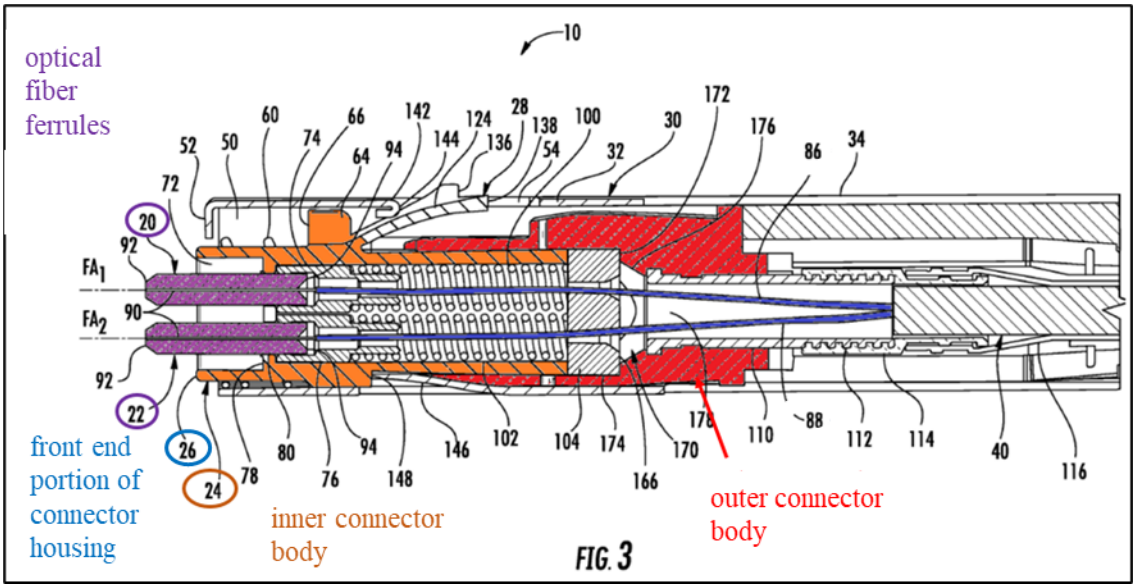

EX1004, FIG. 3 (annotated), (showing the optical fiber ferrules 20, 22 within the inner connector body 24 of the connector housing and showing the optical fiber ferrules 20, 22 exposed through the front end portion 26).

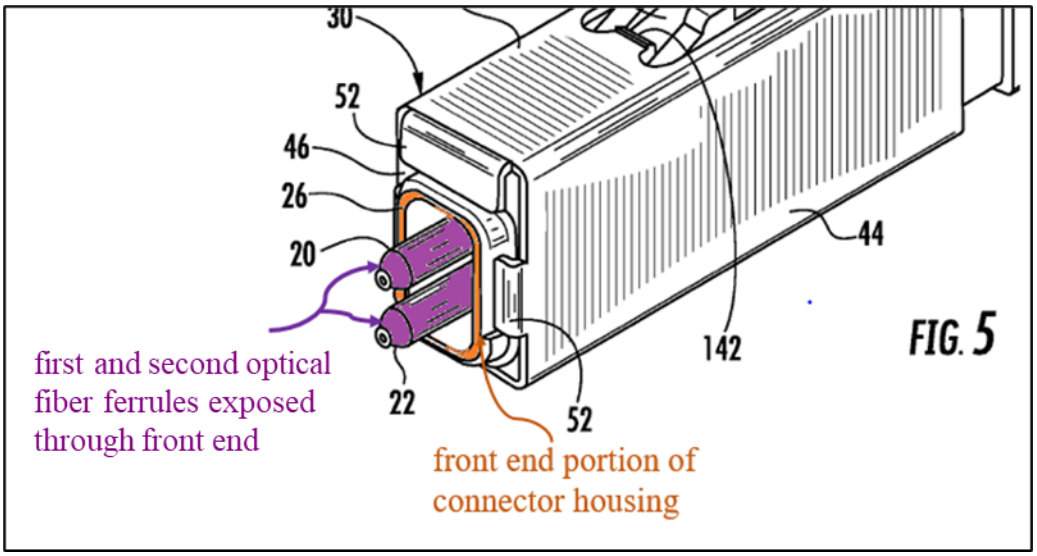

EX1004, FIG. 5 (annotated, excerpt).

407. Lee further describes that the ferrules are housed in the connector housing and are exposed through the front end portion 26. *See*, *e.g.,* EX1004, ¶30 ("the connector 10 includes first and second ferrules 20, 22, an inner connector body 24 having a front end 26 from which the first and second ferrules extend"), ¶35 (describing the first and second ferrule holders 74, 76 and internal wall 78 that hold the first and second ferrules 20, 22 within the inner connector body 24 as can be seen in FIG. 3), ¶¶37-38 (explaining the spring housing arrangements of the connector 10), ¶¶54-58 (explaining the assembly of the connector 10 and the sub-assemblies that includes the ferrules 20, 22). Lee explains that in this arrangement "[t]he first and second ferrules 20, 22 extend beyond the front end of the inner connector body 24". EX1004, ¶35.

408. In my opinion, a POSITA would have understood the purpose of exposing the first and second ferrules 20, 22 beyond the front end of the connector 10 is "for making an optical connection" as recited in this claim element. *See* EX1004, FIGS. 1, 3, 5. A POSITA would have understood that the connectors 10 in Lee's disclosed fiber optic connector system 14 are purposefully designed to be inserted into the adapter 12 to "mak[e] an optical connection" with another connector 10 inserted on the opposite side.

409. Additionally, Lee explains that the "connectors are typically provided on the ends of the cables to conveniently provide these connections [for data transmission]." EX1004, ¶3. Lee goes on to explain "[t]he connectors are designed to be received in ports that align the optical fiber(s) carried by connectors with the optical fiber(s) of other connectors or with equipment (e.g., transceivers) so that data can be transmitted between the components." EX1004, ¶3.

410. A POSITA would understand that it is the exposed ferrules 20, 22 of Lee's disclosure that is making the optical connection described here (i.e., to optical ferrules of other connectors or the optical connection to other equipment such as a transceiver).

411. Indeed, a POSITA would know this is the very purpose of these types of optical connectors and adapters.

412. Lee also describes how the ferrules 20, 22 make an optical connection. EX1004, ¶62 (sleeves are "used to align the first and second ferrules 20, 22 of the connector 10 with similarly-shaped ferrules of a mating component (e.g., another connector)"); *see also* ¶¶62-70, FIGS. 9-14 (describing and illustrating various configurations of adapters and transceivers for forming fiber optic connections).

413. Lee discloses "the first and second optical fiber ferrules are spaced apart from one another along the transverse axis" as recited by this claim element. This can be seen, for example, in any of Figures 1-3 and 5 of Lee. EX1004, FIGS. 1-3, 5; *see also* EX1004, ¶36 (describing how Lee's ferrules are parallel to one another and spaced apart to define a ferrule plane).

414. For example, I provide annotated versions of Figures 1 and 3 here.

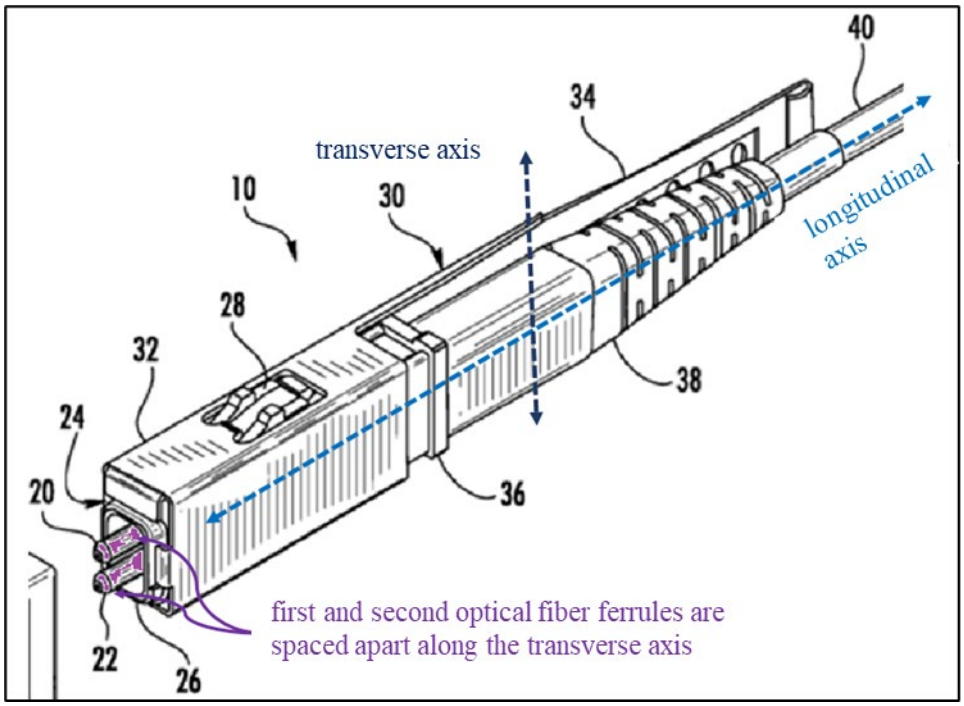

EX1004, FIG. 1 (annotated, excerpt).

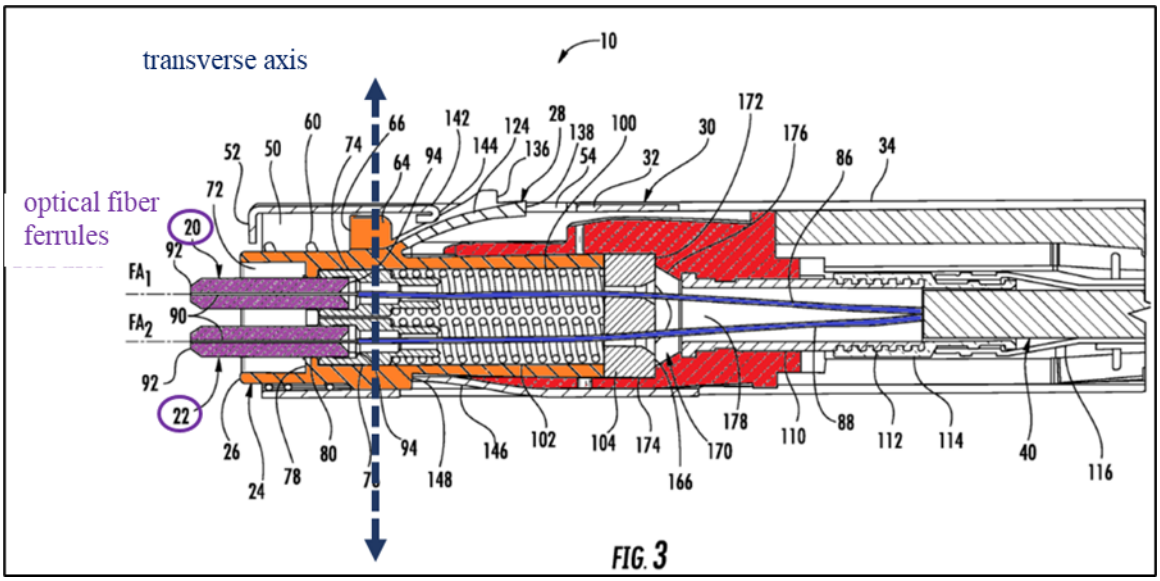

EX1004, FIG. 3 (annotated)

415. Lee discloses two optical fiber ferrules that are exposed through the front end portion of the connector housing and are spaced apart from one another in the transverse direction at least in the same manner that the ’369 Patent does.

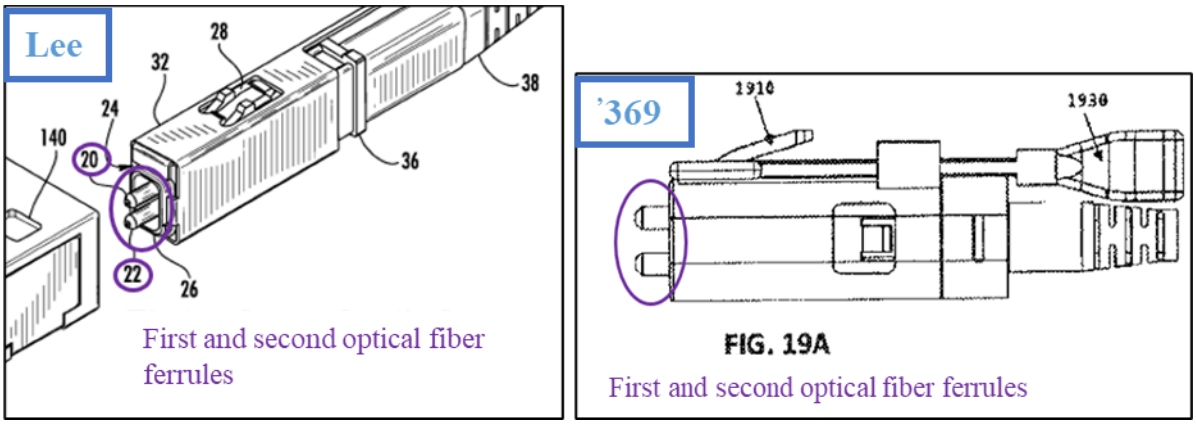

EX1004, FIG. 1 (annotated, excerpt); EX1001, FIG. 19A (annotated).

416. Accordingly, it is my opinion that a POSITA would have understood Lee discloses the features of claim element [1.3].

5. Element [1.4] – "a depressible latch above the top portion of the connector housing; and"

417. For at least the reasons below, it is my opinion that Lee discloses claim element [1.4]. Lee discloses a depressible latch above the top portion of the connector housing. Lee discloses a latch arm 28 that includes first and second latching features 126, 128. *See*, *e.g.,* EX1004, ¶¶30, 43. The latch arm 28 interacts with the housing portion 32 of the handle 30 "to flex toward the inner connector body 24." EX1004, ¶30. Lee further explains that "[w]hen the handle 30 is moved rearwardly relative to the inner connector body 24, [it causes] the latch arm 28 to flex toward the inner connector body 24." EX1004, ¶47. I believe a POSITA would have understood from these disclosures—of the latch arm 28 flexing inwardly toward the inner connector body 24—that the latch arm 28 is a "depressible latch" as recited in this claim.

418. Also, Lee describes that the latch is depressible with respect to the description of the connector 10 being inserted into the adapter 12 and removed from the adapter 12. *See* EX1004, ¶¶63-65, FIGS. 9-10 (explaining the flexing inward during installation of the latch arm 28 and subsequent flexing "away from the inner connector body 24 when the latching features 124, 126 are aligned with the openings 140" of the adapter body 12).

419. A POSITA would have understood that Figures 2 and 4 of Lee show the latch arm 28 is depressible because it is configured to move up and down relative to the inner connector body 24.

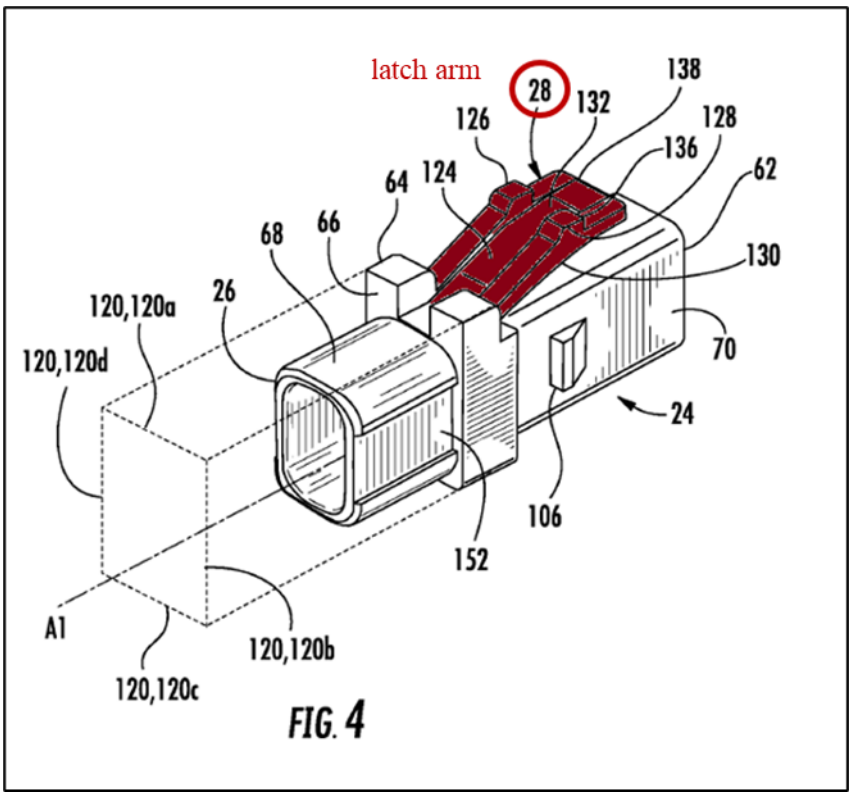

EX1004, FIG. 4 (annotated); *see also* EX1004, FIG. 2 (showing the same configuration of the latch arm 28).

420. In my opinion, a POSITA would have understood Lee to disclose the latch arm 28 is "above the top portion of the connector housing" as recited in this element. For example, the latching features 124, 126 of the latch arm 28 are readily seen as extending above the top portion of the connector housing (i.e., the inner connector body 24 coupled to the outer connector body 36), as shown in Figure 5 below.

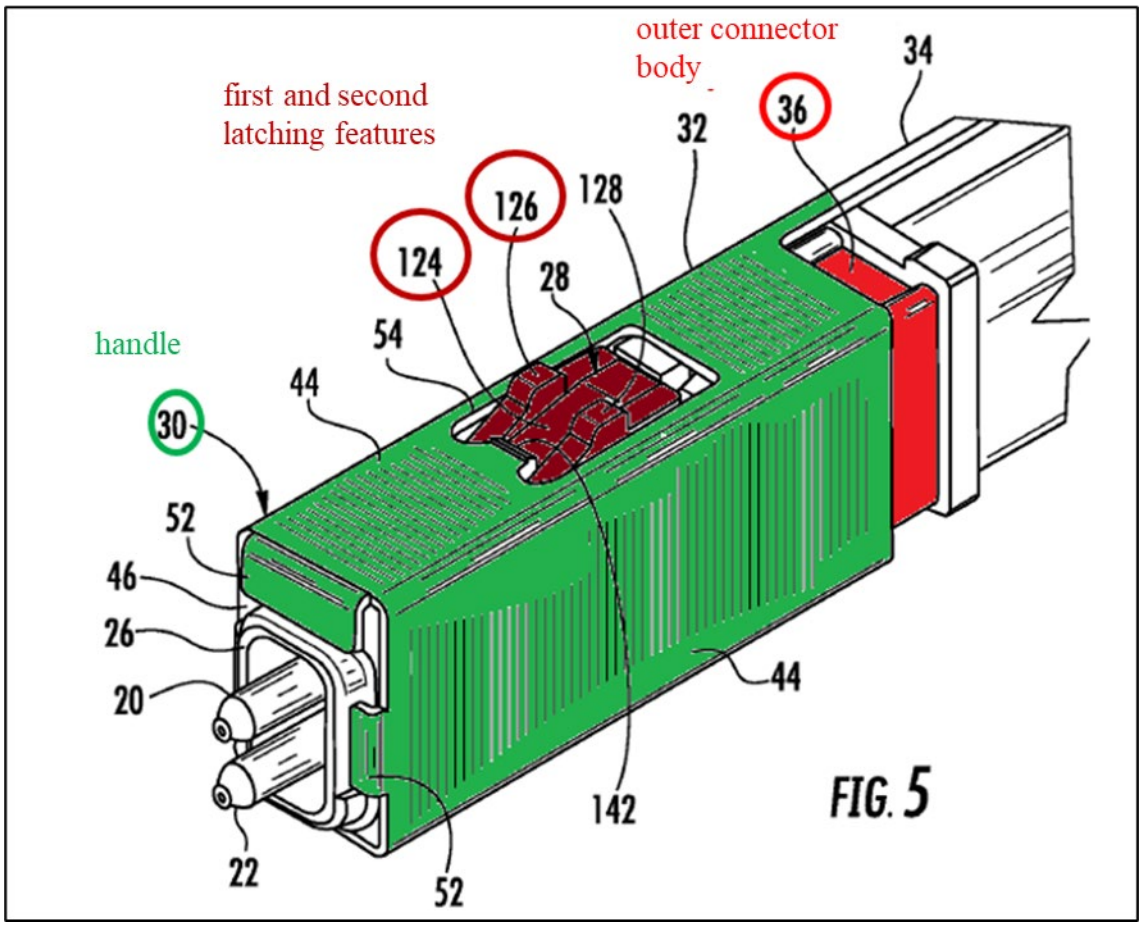

EX1004, FIG. 5 (annotated), (showing the first and second latching features extending above the handle 30, which encloses the inner and outer connector bodies 24, 36).

421. Figure 3 also clearly shows the latch arm 28 extending above the top portion of the inner connector body 24 and the outer connector body 36.

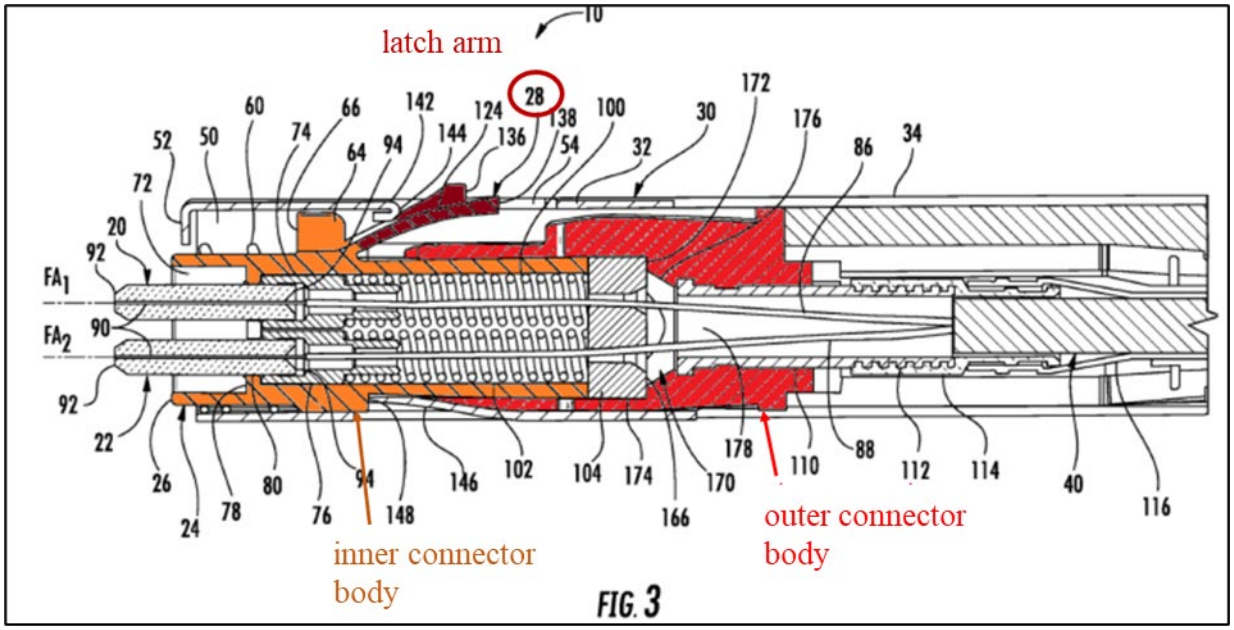

EX1004, FIG. 3 (annotated).

422. Further, Lee describes that the first and second latching features 124, 126 extend above the top portion of the connector 10 in order to interact with the handle 30 and the openings in the adapter 12. *See*, *e.g.,* EX1004, ¶¶43-45, 63-65, FIGS. 9-10. Additionally, Lee explains the latch arm 28 extends through an opening 54 of the handle 30. See EX1004, ¶31. The opening 54 of the handle 30 is above the top portion of the inner connector body 24 and the outer connector body 36 (as seen in, e.g., Figures 1-3, 5), and so a POSITA would have understood Lee is disclosing the latch arm 28 is above the top portion of the inner connector body 24.

423. Accordingly, it is my opinion that a POSITA would have understood Lee discloses the features of claim element [1.4].

6. Element [1.5] – "an elongate arm connected to the connector housing above the top portion and configured to be pulled to actuate the depressible latch;"

424. For at least the reasons below, it is my opinion that Lee discloses claim element [1.5]. A POSITA would have understood Lee discloses an elongate arm connected to the connector housing above the top portion and configured to be pulled to actuate the depressible latch. *See* EX1004, FIGS. 1-2 (illustrating the handle 30, which is an elongate arm connected to the connector housing above the top portion and configured to be pulled to actuate the latch arm 28).

425. In particular, the handle 30 shown in Figures 1 and 2 satisfies the "elongate arm" claim element.

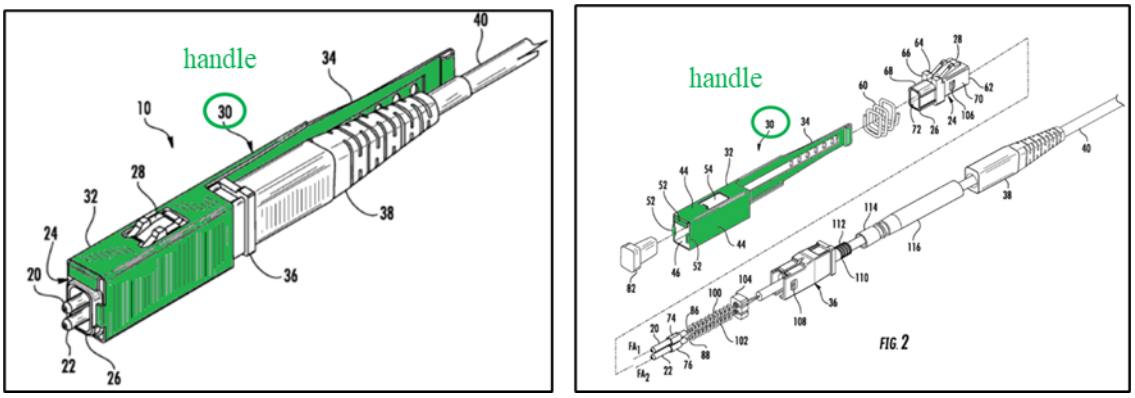

EX1004, FIGS. 1-2 (annotated, excerpt).

426. Lee's handle is configured to be retracted rearwardly to actuate the latch arm 28. See EX1004, ¶¶30, 32, 43, 47.

427. For example, Lee explains "the handle 30 can move relative to the inner connector body 24 so that the housing portion 32 can cause the latch arm 28 to flex toward the inner connector body 24." EX1004, ¶30. Lee further explains the handle 30 includes "a pushing feature 142 adjacent the opening 54 for contacting the latch arm 24," and provides more detail that the "[w]hen the handle 30 is moved rearwardly relative to the inner connector body 24, the rounded surface 144 contacts and slides along the ramp 124 to cause the latch arm 28 to flex toward the inner connector body 24." EX1004, ¶47.

428. A POSITA would have understood that Lee's grip portion 34 would be pulled to actuate the latch arm 28 as explained above and as understood based on, *e.g.*, Figure 5. *See also* FIG. 2 (showing the grip portion 34); ¶32 (describing the grip portion 34 as a plate-like extension that a POSITA would have understood is pulled by a user to move the handle 30 rearwardly relative to the latch arm 28 and inner connector body 24).

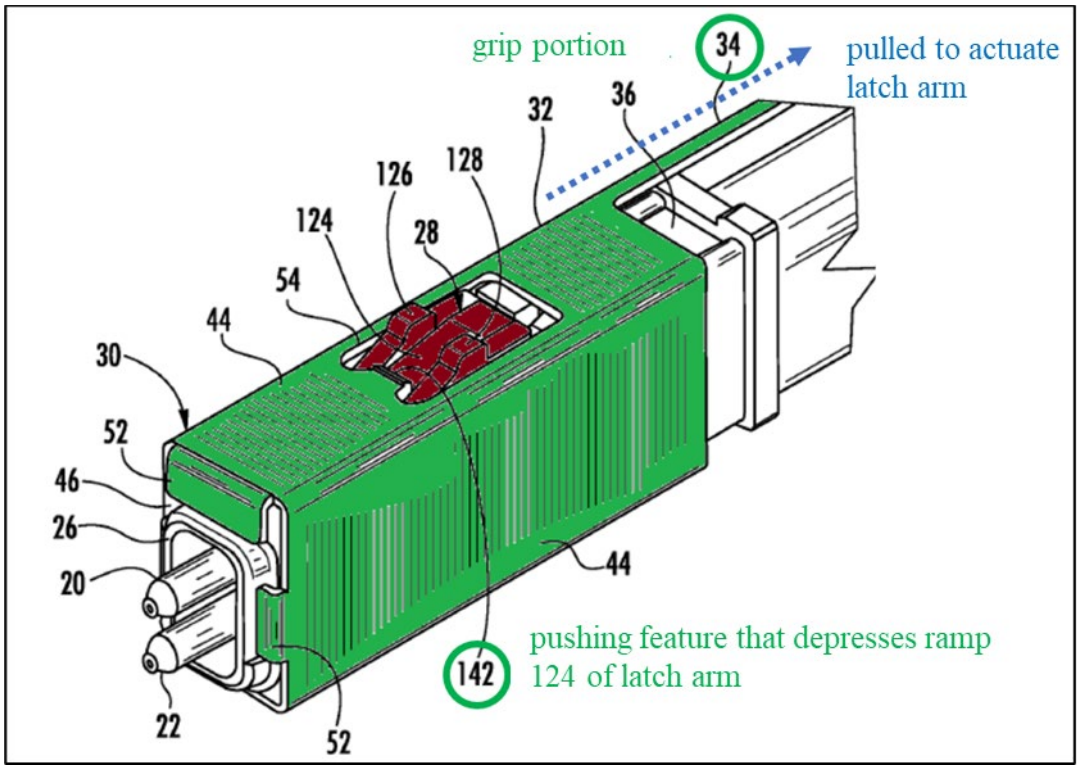

EX1004, FIG. 5 (annotated).

429. I believe a POSITA would have understood Lee's handle 30 is connected to the connector housing (i.e., the inner connector body 24 coupled to the outer connector body 36) above the top portion of the connector housing.

430. First, a POSITA would have appreciated that Lee's handle 30 includes a housing portion 32 that has a rectangular structure with four sides 44 that are collectively connected to the inner and outer connector bodies 24, 36 by virtue of being sized slightly larger than the outer dimensions of the inner and outer connector bodies 24, 36, thereby housing inner and outer connector bodies 24, 36. Furthermore, the top side 44 of the housing portion 32 is connected to the inner and outer connector bodies 24, 36 above the top portion of the inner and outer

connector bodies 24, 36 at least because this top side 44 prevents the housing portion 32 from separating from the inner and outer connector bodies 24, 36, *e.g.*, when a downward force is applied to the housing portion 32. EX1004, FIGS. 4-5, (FIG. 4 showing the inner connector body 24 and latch arm 28 in isolation and FIG. 5 showing the handle 30 connected to the inner connector body 24 and the outer connector body 36 through housing portion 32 and more specifically top side 44).

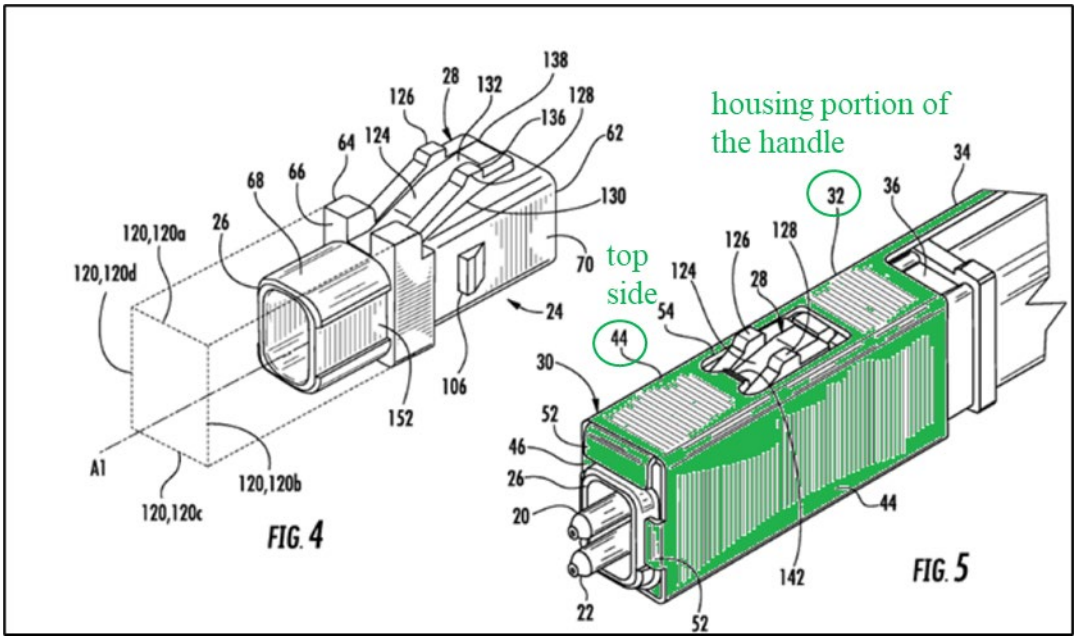

EX1004, FIGS. 4-5 (annotated).

431. Additionally, Lee's handle 30 includes a tab 52 and a pushing feature 142 that connect the handle 30 to the connector housing above the top portion of the inner and outer connector bodies 24, 36. In particular, Lee describes that that the pushing feature 142 "is in the form of a finger extending into the opening 54" and includes a "rounded surface 144 [which] contacts and slides along the ramp

124 to cause the latch arm 28 to flex toward the inner connector body 24."

EX1004, ¶47.

432. This pushing feature 142 moves between the first and second latching features 126, 128, e.g., as shown in Figure 5, reproduced above, and thus the pushing feature 142 is connected between the latching features 126, 128 (at least in the same manner as described in the '369 Patent, as I discuss further below).

433. This connection is above the top portion of the connector housing, *e.g.*, as shown in Figure 3.

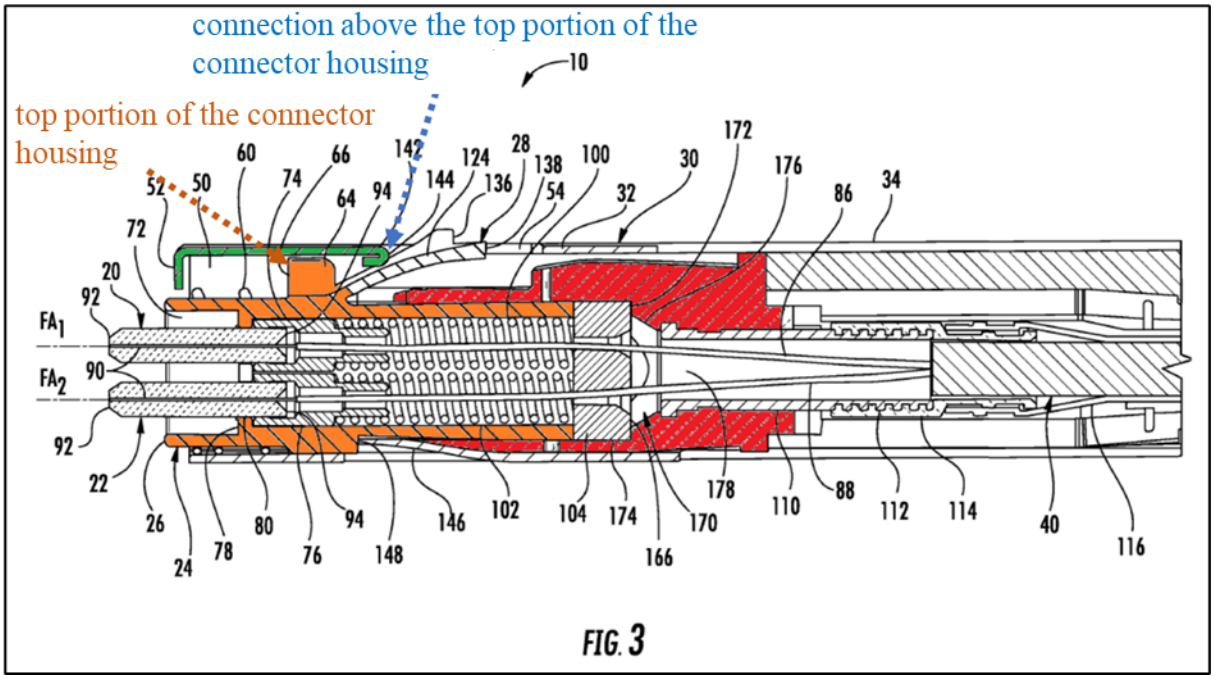

EX1004, FIG. 3 (annotated).

434. Lee further explains that an outer spring 60 is compressed between the front tabs 52 of the housing portion 32 included in the handle 30 and the flange 64 of the inner connector body 24 to limit the amount of movement of the handle 30

in the rearward direction. *See* EX1004, ¶48. This connection is above the top portion of the inner connector body 24 at this location of the connector housing.

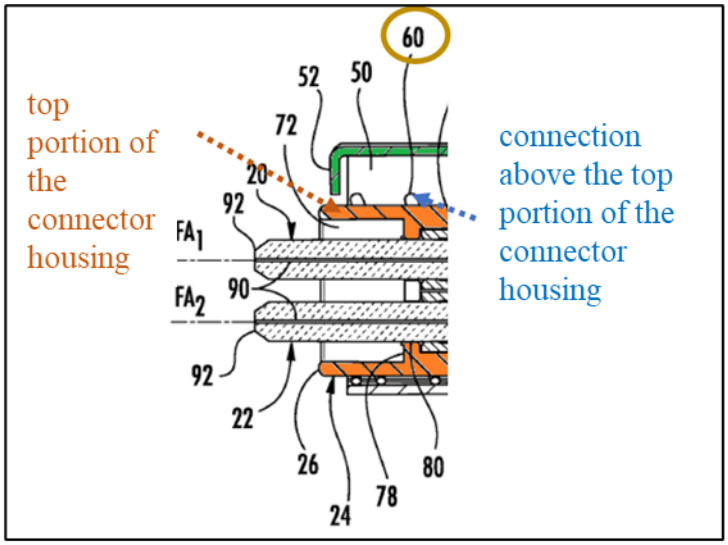

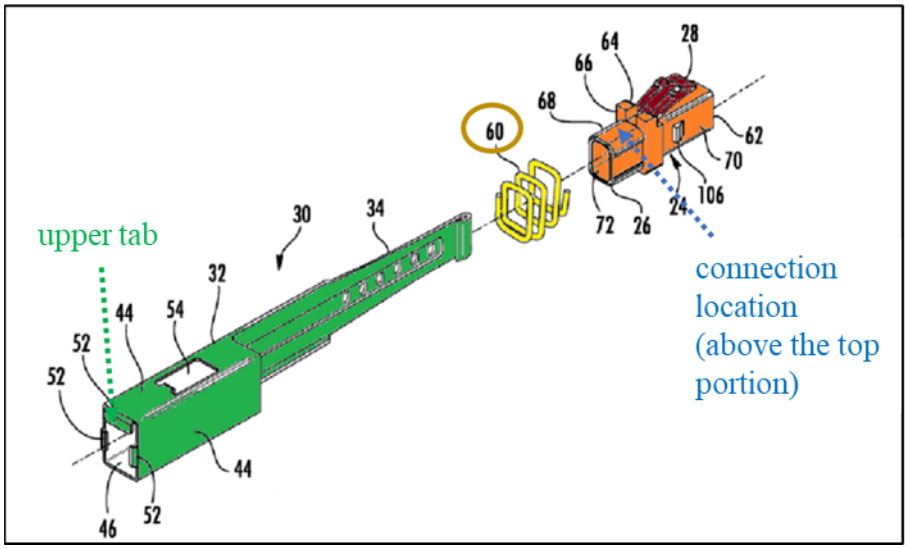

EX1004, FIGS. 2-3 (annotated, excerpt).

435. It is my opinion that the lack of disclosure, and thus criticality, in the ’369 Patent regarding this claim element further highlights the breadth of the claim feature and why Lee discloses this element.

436. First, the ’369 Patent provides no discussion or information regarding the scope or meaning of an “elongate arm.” *See* generally EX1001 (e.g., failing to use the term “elongate” a single time beyond the claims).

437. I believe a POSITA would have understood Lee’s disclosure to be such an “elongate arm” because it is a generally elongated structural component that is manipulable as an arm-like structure.

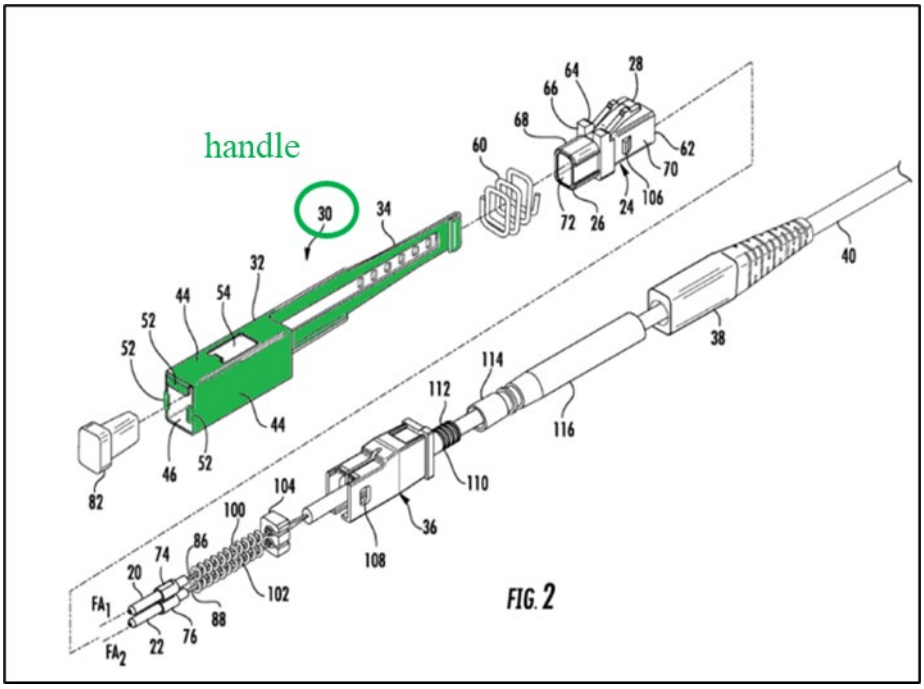

EX1004, FIG. 2 (annotated).

438. Further, I believe a POSITA would have understood that Lee’s elongate arm is not limited to, e.g., a push-pull tab as shown in Figure 19B based on the claims of the ’369 Patent. For convenience, I reproduce Figure 19B of the ’369 Patent here.

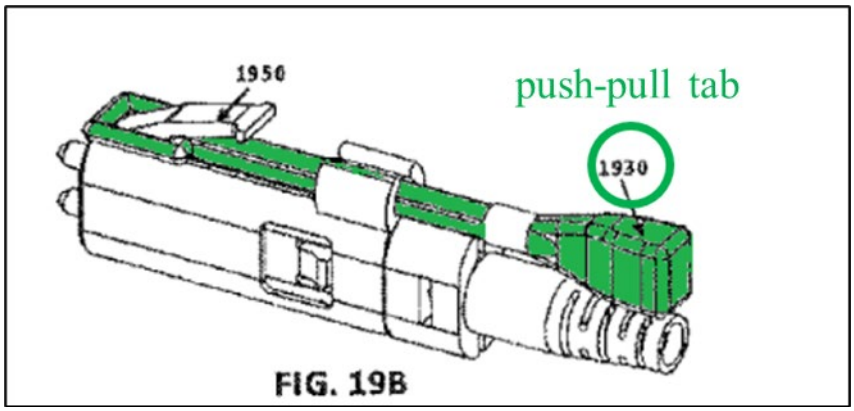

EX1001, FIG. 19B (annotated), 12:38-46 (describing that the push-pull tab 1930 is "a separable element from the connector housing" and actuates the latch 1950).

439. The '369 Patent includes claims directed to a push-pull tab. *See* EX1001, Cls. 21, 40. Both of these claims also include the "elongate arm" as a claim element. Therefore, I believe a POSITA would have understood that the "elongate arm" is a broader term than a "push-pull tab" and that the elongate arm of claim 1 is not limited to a push-pull tab.

440. In any event, Lee's handle 30 is an example of an elongate arm as recited in claim element [1.5].

441. As a second point, Lee's handle 30 is connected to the top portion of the connector housing (comprised of the inner connector body 24 and the outer connector body 36) at least in the same respect as is described in the '369 Patent itself.

442. I have carefully reviewed the '369 Patent, and I have not found any particular discussion in the specification of an elongate arm "connected to" a

connector housing, or any criticality or required definition of this term. *See* generally EX1001.

443. To the extent that Figure 19B provides an example of a push-pull tab "connected to" the connector housing, Lee provides the same disclosure of such a connection. That is, the '369 Patent is clear that the push-pull tab 1930 is "not integrated" with the connector housing and a "separable element" from the connector housing (EX1001, 12:38-42), and further shows an example where the push-pull tab 1930 is constrained at one location in the lateral direction by an unlabeled, undescribed component.

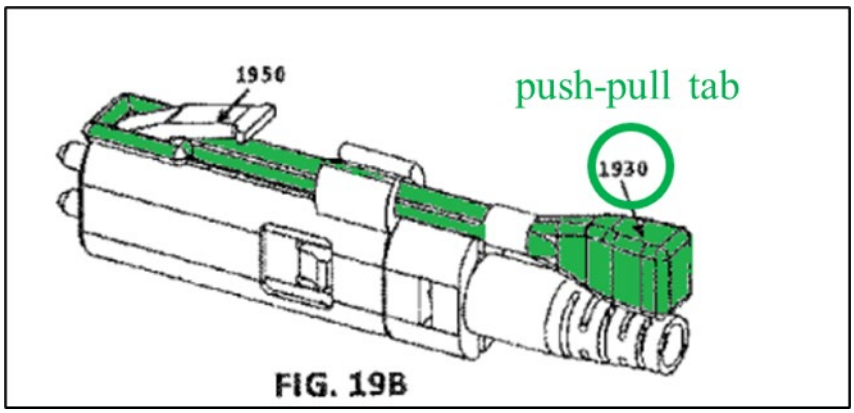

EX1001, FIG. 19B (annotated).

444. Therefore, in my opinion Lee anticipates this element at least in the same way as shown in the '369 Patent for at least three reasons: (i) by the top side 44 of the rectangular housing portion 32 restricting movement of the housing portion 32 relative to the inner connector body 24 and outer connector body 36 in the vertical directional; (ii) the pushing feature 142 connecting between the

protrusions of the latching features 126, 128 thus restricting movement of the housing portion 32 and handle 30 in the lateral direction (in the same way as in Figure 19B); and (iii) by the upper tab 52 that is connected to the connector housing via the spring 60, which restricts movement of the handle 30 in the lateral and vertical directions.

445. Accordingly, it is my opinion that a POSITA would have understood Lee discloses the features of claim element [1.5].

7. Element [1.6] – "wherein the connector housing comprises a guide connecting the elongate arm to the optical fiber connector."

446. For at least the reasons below, it is my opinion Lee discloses claim element [1.6]. A POSITA would have understood that Lee discloses the connector housing includes a guide connecting the elongate arm to the optical fiber connector. *See*, *e.g.,* EX1004, ¶¶50-51, FIGS. 4-5. For example, Figure 4 shows a guide of the connector housing.

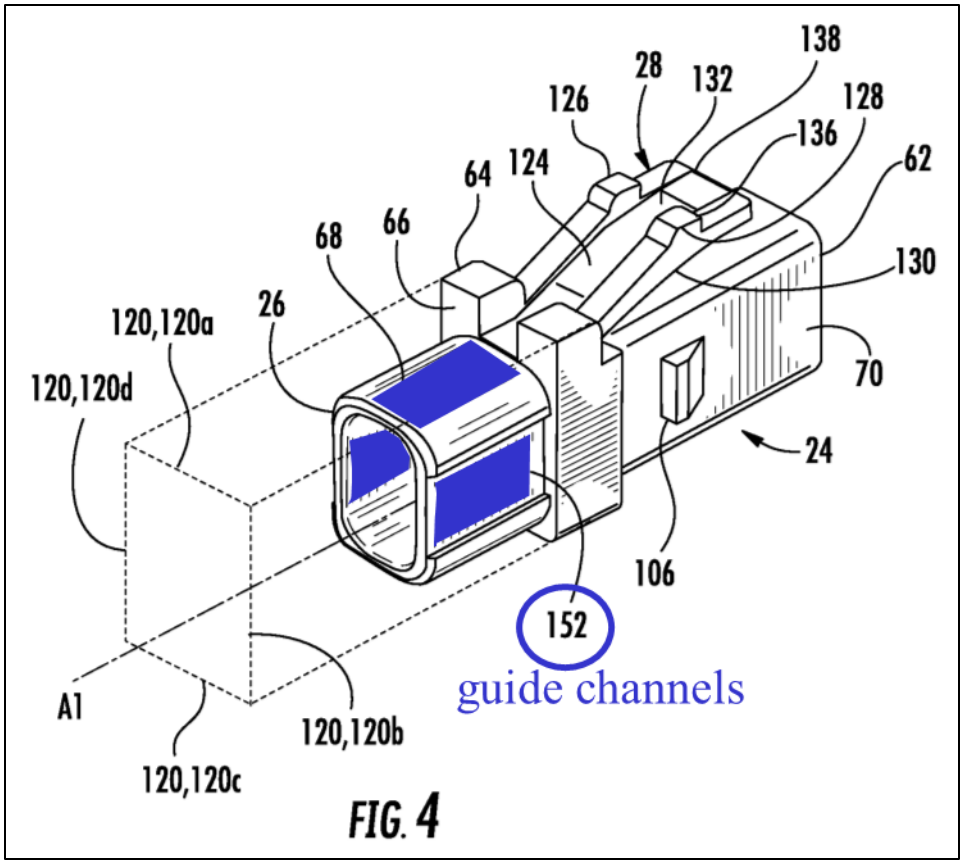

EX1004, FIG. 4 (annotated).

447. Lee explains how the guide channels 152 on the inner connector body 24 of the connector housing restricts movement: "Referring back to Fig. 4, two of the sides 120 (120b, 120d) of the inner connector body 24 each include a guide channel 152 extending along a length of the front portion 68. The guide channels 152 extend between the front end 26 and the flange 64. When the connector 10 is assembled, and as shown in Fig. 5, two of the tabs 52 on the housing portion 32 are received in the guide channels 152. The tabs 52 travel along the guide channels 152 when the handle 30 moves relative to the inner connector body 24." EX1004, ¶50.

448. Figure 2 shows the tabs 52 that are received in the guide channels 152.

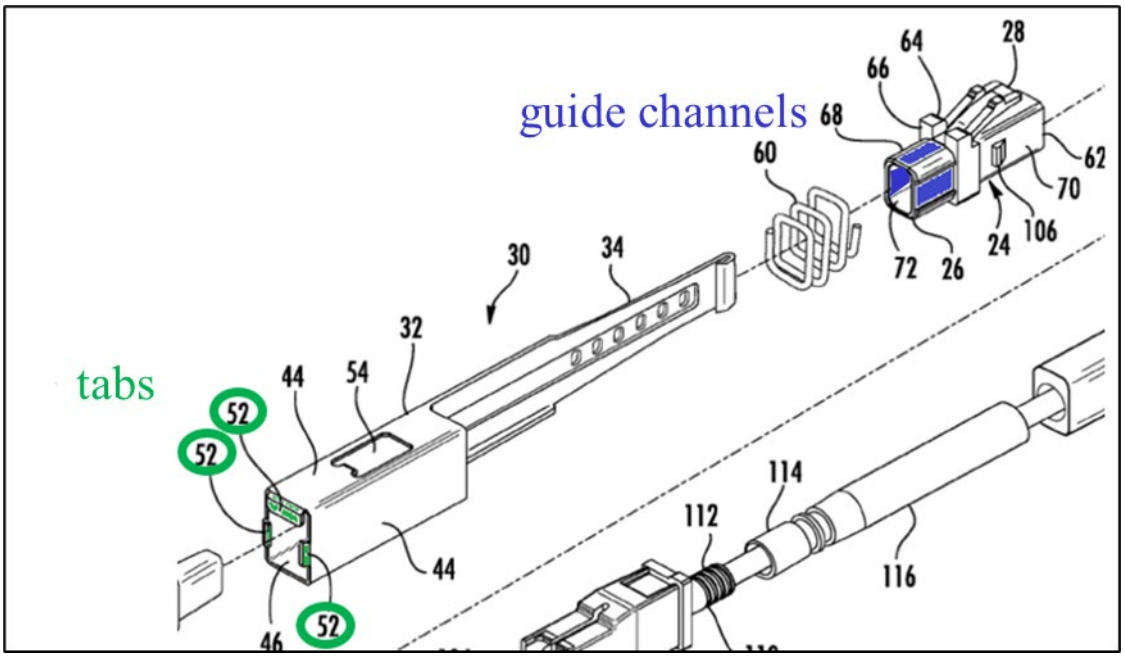

EX1004, FIG. 2 (annotated, excerpt).

449. In my opinion, a POSITA would have further understood that Lee's guide channels 152 connect the handle 30 to the connector housing based on the description of the tabs 52 at the front end of the handle 30 that move within the guide channels 152. See EX1004, ¶51. Further, the upper tab 52 moves along a guide channel at the upper surface of the front portion 68 of the inner connector body 24 as shown in Figures 2-5 (as identified in blue coloring above). *See also* EX1004, ¶¶33, 50-51.

450. Accordingly, it is my opinion that a POSITA would have understood Lee discloses the features of claim element [1.6]. Thus, it is my opinion that a POSITA would have understood Lee anticipates the entirety of claim 1.

B. Claim 2

1. Preamble – "The optical fiber connector as set forth in claim 1, wherein"

451. Claim 2 depends on claim 1, and for at least the reasons discussed above in reference to claim 1, Lee anticipates claim 1. See Section XI.A. Additionally, for at least the reasons below, it is my opinion that Leeanticipates claim 2 of the '369 Patent.

2. Element [2.1] – "the guide defines a groove extending along the longitudinal axis."

452. In my opinion, a POSITA would have understood Lee discloses claim element [2.1].

453. For example, Lee explains how the guide channels 152 extend along the longitudinal axis and receive the tabs 52. EX1004, ¶50.

454. Further, I believe a POSITA would have understood that the guide channels 152 of Lee Figures 1-5 collectively illustrate grooves oriented in this way, e.g., as annotated here with respect to Figure 4.

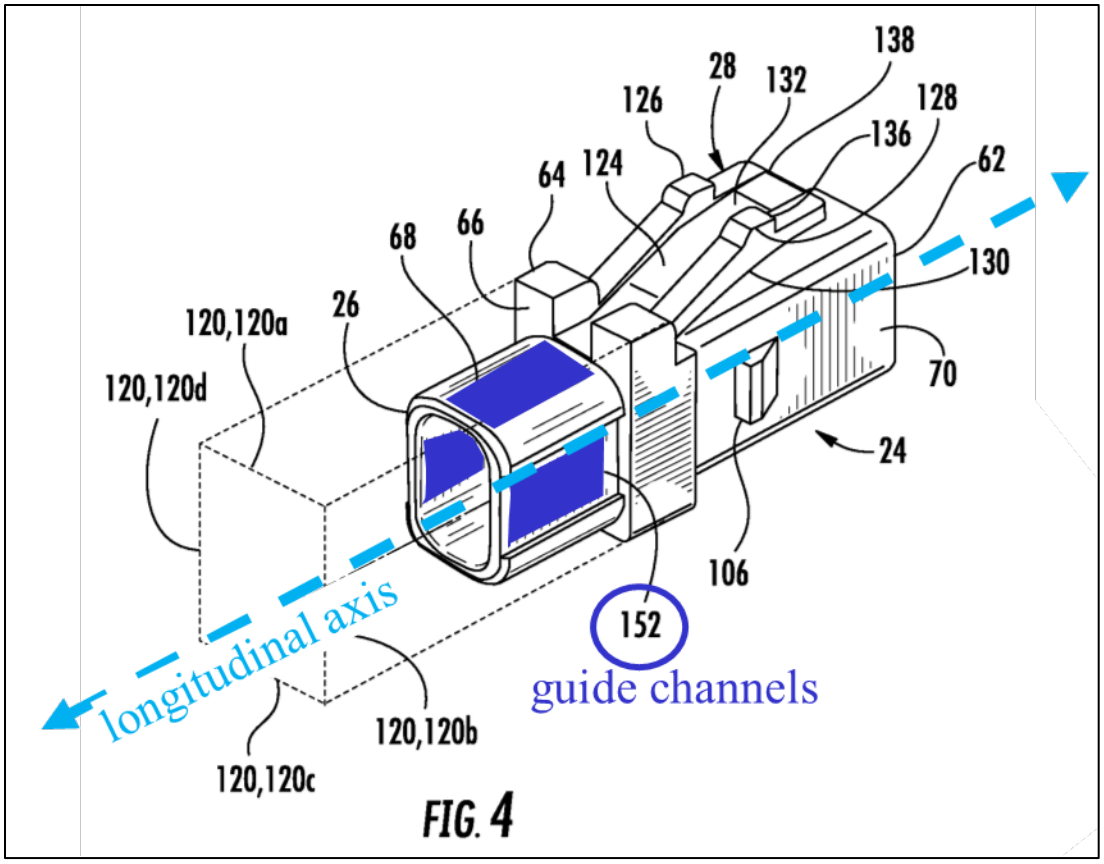

EX1004, FIG. 4 (annotated).

455. Lee explains and illustrates that the tabs 52 of the handle 30 are slidably received in the guide channels 152. *See*, *e.g.,* EX1004, ¶¶33, 50-51, FIGS. 2-5. As demonstrated in Figures 2 and 4, the guide channels are consistent with a groove through which the tabs are received.

456. For example, I have annotated Lee Figure 2, which a POSITA would readily understand discloses having tabs 52 that are slidably received in the guide channels 152 above the top portion of the connector housing and along the longitudinal axis.

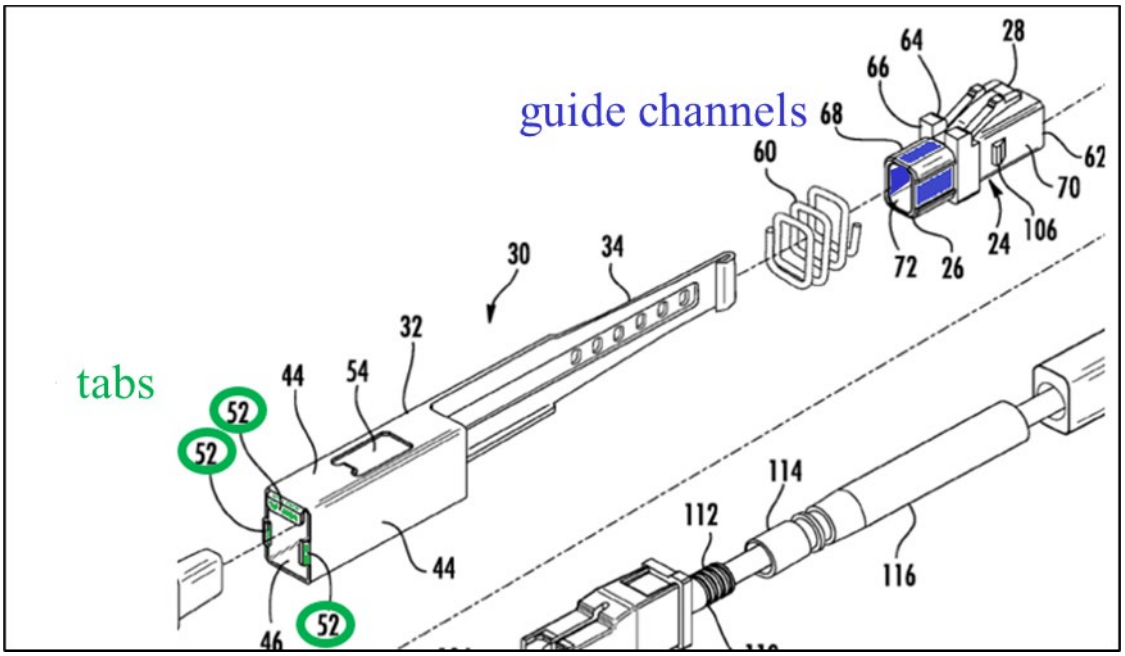

EX1004, FIG. 2 (annotated, excerpt).

457. Accordingly, it is my opinion that a POSITA would have understood Lee discloses and anticipates claim 2.

C. Claim 3

1. Preamble – "The optical fiber connector as set forth in claim 2, wherein"

458. Claim 3 depends on claims 1-2, and for at least the reasons discussed above in reference to claims 1-2, Lee anticipates claims 1-2. *See* Section XI.A-B. Additionally, for at least the reasons below, it is my opinion that Lee anticipates claim 3 of the '369 Patent.

2. Element [3.1] – "the elongate arm is slidably received in the groove."

459. In my opinion, a POSITA would have understood Lee discloses claim element [3.1].

460. For example, Lee explains how the guide channels 152 extend along the longitudinal axis and receive the tabs 52. EX1004, ¶50.

461. Further, I believe a POSITA would have understood that Lee Figures 1-5 collectively illustrate grooves oriented in this way, e.g., as annotated here with respect to Figure 4.

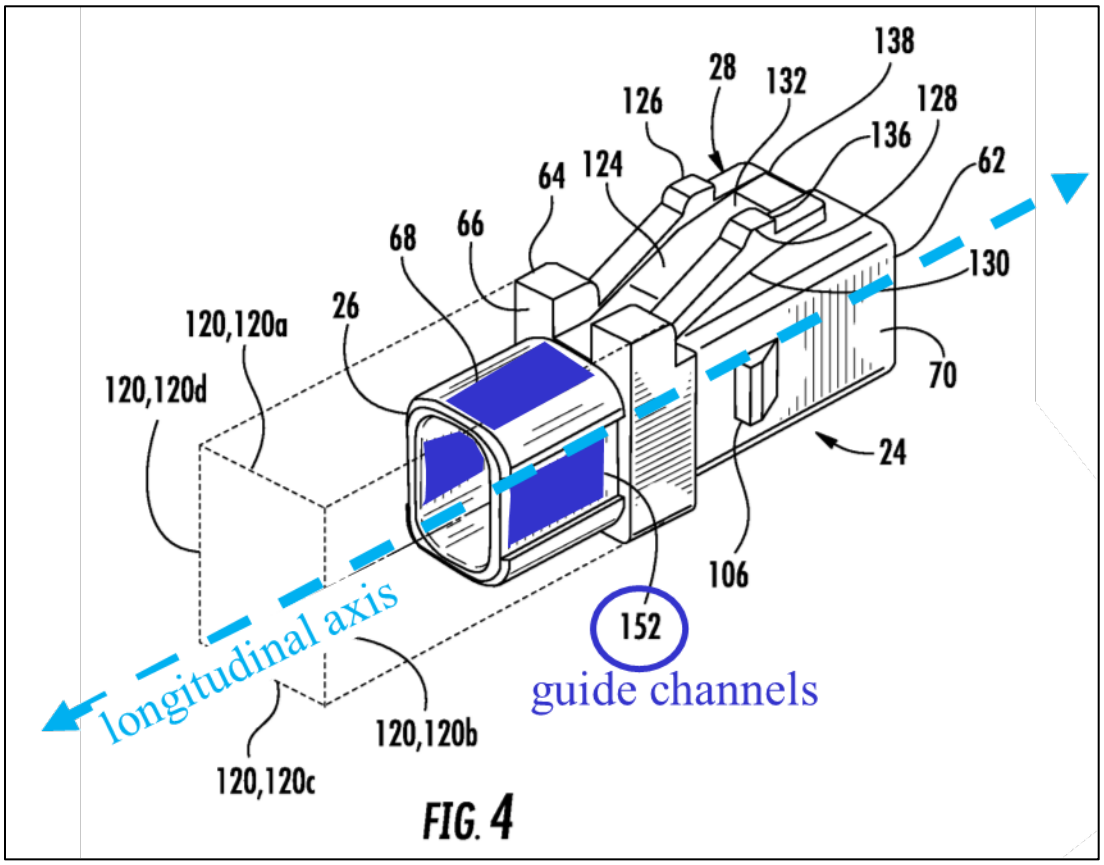

EX1004, FIG. 4 (annotated).

462. As I discuss above, the tabs 52 are included in the housing portion 32 of the handle 30 whereby "[t]he tabs 52 travel along the guide channels 152 when the handle 30 moves relative to the inner connector body 24." EX1004, ¶¶33, 50-51. *See* Section XI.A.6.

463. For example, I have annotated Lee Figure 2, which a POSITA would readily understand discloses having tabs 52 of Lee's elongate arm (handle 30) that are slidably received in the guide channels 152 and above the top portion of the connector housing.

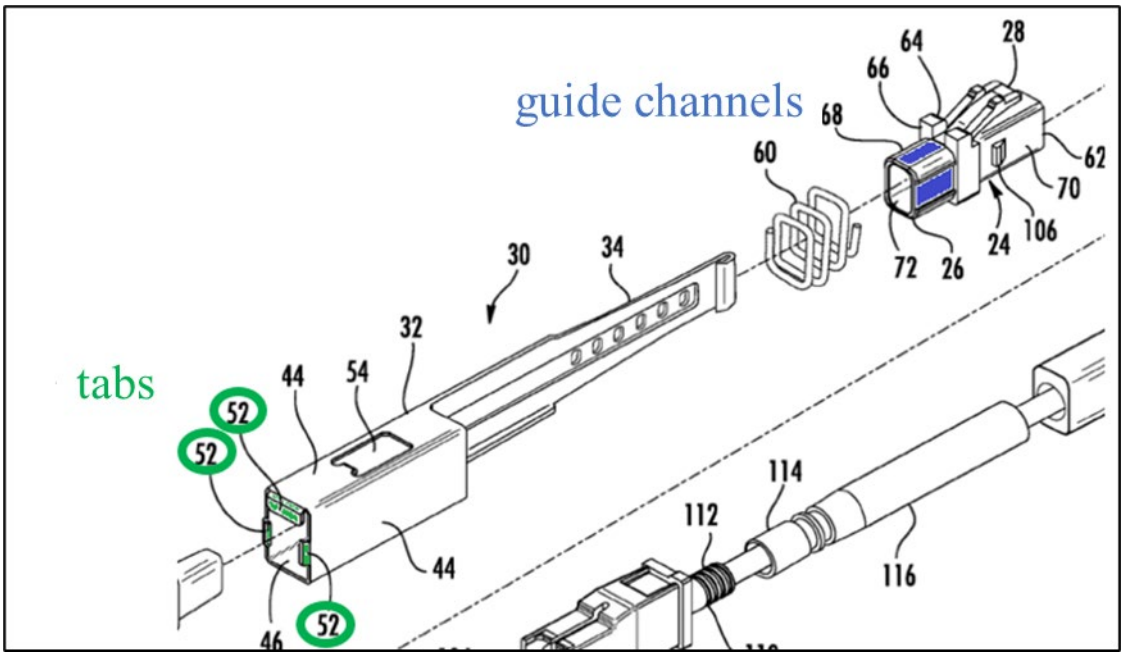

EX1004, FIG. 2 (annotated, excerpt).

464. Accordingly, it is my opinion that a POSITA would have understood Lee discloses and anticipates claim 3.

D. Claim 4

1. Preamble – "The optical fiber connector as set forth in claim 1, wherein"

465. Claim 4 depends on claim 1, and for at least the reasons discussed above in reference to claim 1, Lee anticipates claim 1. *See* Section XI.A.

Additionally, for at least the reasons below, it is my opinion that Lee anticipates claim 4 of the '369 Patent.

2. Element [4.1] – "the elongate arm comprises a front end portion and a rear end portion spaced apart along the longitudinal axis."

466. In my opinion, a POSITA would have understood Lee discloses claim element [4.1]. Lee's elongate arm (the handle 30) includes a front end portion and a rear end portion spaced apart along the longitudinal axis. Further, a POSITA would have understood Lee's elongate arm (the handle 30) defines an opening 54 and that the latch arm 28 is received in the opening 54.

467. I believe a POSITA would have understood that, for example, Figures 4 and 5 of Lee illustrate all of the aspects of claim 4.

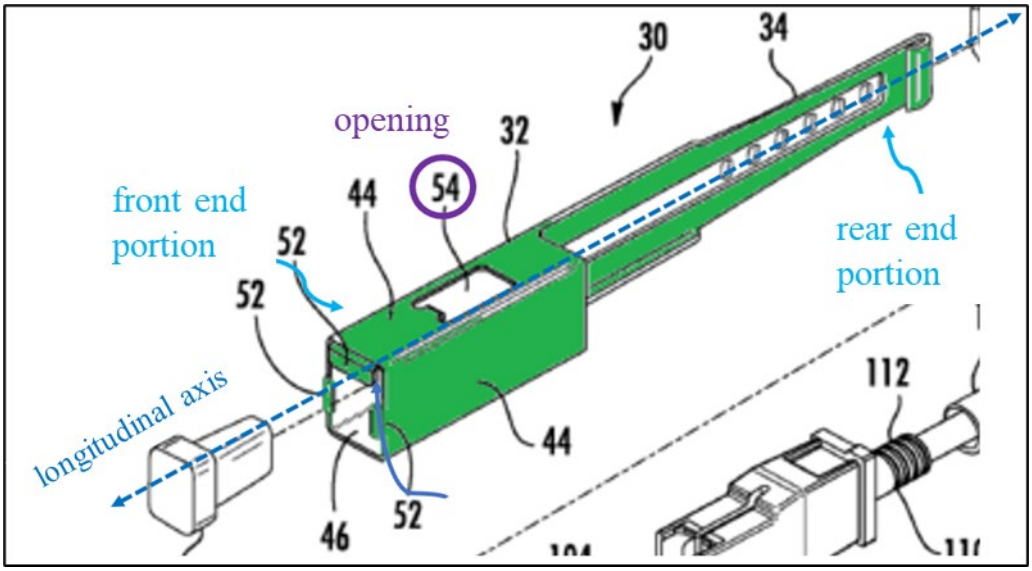

EX1004, FIG. 2 (annotated, excerpt).

468. Specifically, the grip portion 34 of Lee is a rear end portion and the housing portion 32 of Lee is a front end portion. *See, e.g.,* EX1004, ¶¶30-32.

469. Accordingly, it is my opinion that a POSITA would have understood Lee discloses and anticipates claim 4.

E. Claim 5

1. Preamble – "The optical fiber connector as set forth in claim 4, wherein"

470. Claim 5 depends on claim 1 and claim 4, and for at least the reasons discussed above in reference to claims 1 and 4, Lee anticipates claim 1 and claim 4. *See* Sections XI.A, XI.D. Additionally, for at least the reasons below, it is my opinion that Lee anticipates claim 5 of the '369 Patent.

2. Element [5.1] – "the front end portion of the elongate arm defines an opening."

471. In my opinion, a POSITA would have understood Lee discloses claim element [5.1]. Lee's elongate arm (the handle 30) includes a front end portion and a rear end portion spaced apart along the longitudinal axis. *See* Section XI.D. Further, a POSITA would have understood Lee's elongate arm (the handle 30) defines an opening 54 and that the latch arm 28 is received in the opening 54.

472. I believe a POSITA would have understood that, for example, Figures 4 and 5 of Lee illustrate all of the aspects of claim 5.

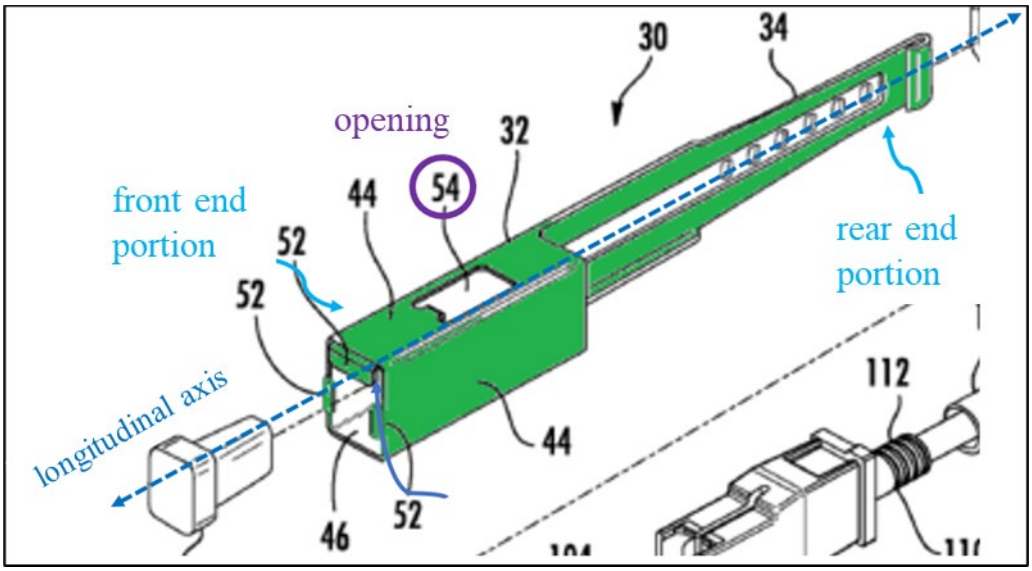

EX1004, FIG. 2 (annotated, excerpt).

473. For example, the grip portion 34 of Lee is a rear end portion and the housing portion 32 of Lee is a front end portion. *See, e.g.*, EX1004, ¶¶30-32.

474. Additionally, Lee describes the opening 54 is in the housing portion 32, which is the front end portion. *See, e.g.*, EX1004, ¶¶30-32, 47 ("the housing portion 32 of the handle 30 *includes an opening 54*" (emphasis added)).

475. Accordingly, it is my opinion that a POSITA would have understood Lee discloses and anticipates claim 5.

F. Claim 6

1. Preamble – "The optical fiber connector as set forth in claim 5, wherein"

476. Claim 6 depends on claim 1 and claims 4-5, and for at least the reasons discussed above in reference to claims 1 and claims 4-5, Lee anticipates

claims 1 and claims 4-5. *See* Sections XI.A, D-E. Additionally, for at least the reasons below, it is my opinion that Lee anticipates claim 6 of the '369 Patent.

2. Element [6.1] – "the depressible latch is received in the opening."

477. In my opinion, a POSITA would have understood Lee discloses claim element [6.1]. Lee's elongate arm (the handle 30) includes a front end portion and a rear end portion spaced apart along the longitudinal axis. *See* Section XI.D. Further, a POSITA would have understood Lee's elongate arm (the handle 30) defines an opening 54, *See* Section XI.E, and that the latch arm 28 is received in the opening 54.

478. As discussed above, I believe a POSITA would have understood that, for example, Figures 4 and 5 of Lee illustrate all of the aspects of claims 4-5.

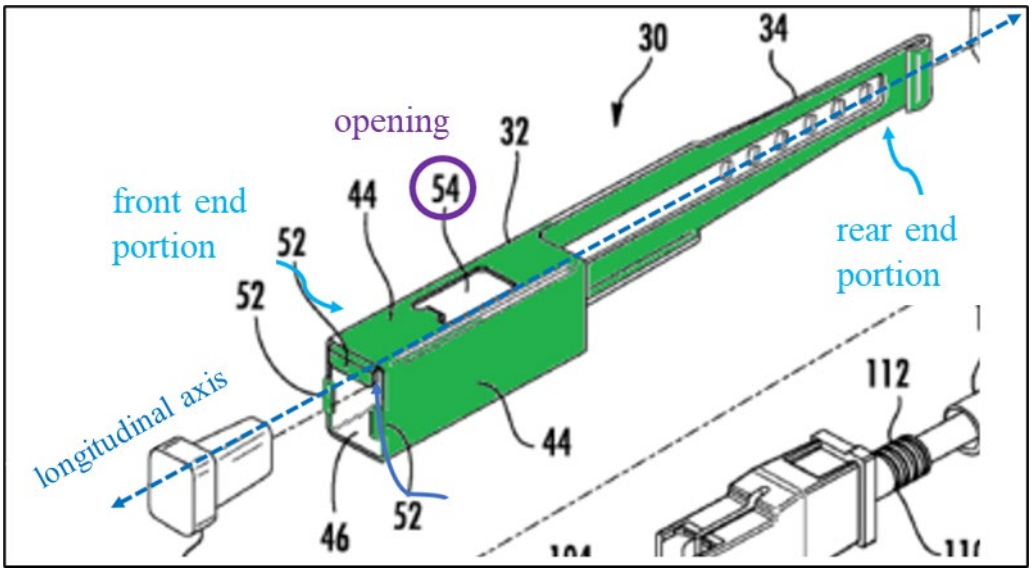

EX1004, FIG. 2 (annotated, excerpt).

479. For example, the grip portion 34 of Lee is a rear end portion and the housing portion 32 of Lee is a front end portion. *See, e.g.*, EX1004, ¶¶30-32.

480. Additionally, Lee describes the opening 54 is in the housing portion 32, which is the front end portion. *See, e.g.*, EX1004, ¶¶30-32, 47 ("the housing portion 32 of the handle 30 <u>includes an opening 54</u>").

481. Lee also discloses the latch arm 28 is received in the opening 54 of the housing portion 32 of the handle 30. EX1004, ¶47 ("the housing portion 32 of the handle 30 includes an opening 54 for <u>through which the latch arm 28 extends</u> when the connector 10 is assembled").

482. A POSITA would further have understood that Lee Figures 1-5 illustrate the latch arm 28 being received in the opening in the front portion of Lee's elongate arm, *e.g.*, as annotated in Figure 5 below.

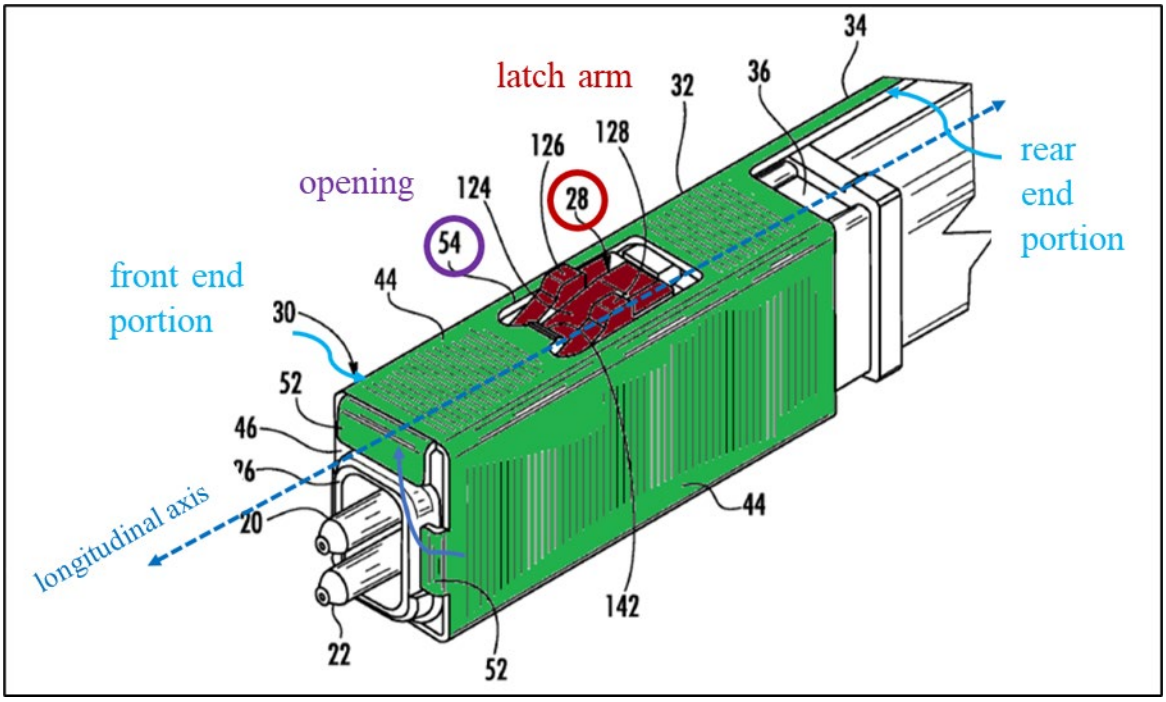

EX1004, FIG. 5 (annotated).

483. Accordingly, it is my opinion that a POSITA would have understood Lee discloses and anticipates claim 6.

G. Claim 7

1. Preamble – "The optical fiber connector as set forth in claim 6, wherein"

484. Claim 7 depends on claim 1 and claims 4-6, and for at least the reasons discussed above in reference to claims 1 and 4-6, Lee anticipates claim 1 and claims 4-6. *See* Sections XI.A, D-F. Additionally, for at least the reasons below, it is my opinion that Lee anticipates claim 7 of the '369 Patent.

2. Element [7.1] – "the depressible latch has a front end portion and rear end portion spaced apart along the longitudinal axis and wherein the depressible latch extends upward along the transverse axis as the depressible latch extends along the longitudinal axis from the front end portion to the rear end portion of the depressible latch."

485. In my opinion, a POSITA would have understood Lee discloses claim element [7.1]. *See, e.g.*, EX1004, ¶¶43-46, FIGS. 3-4.

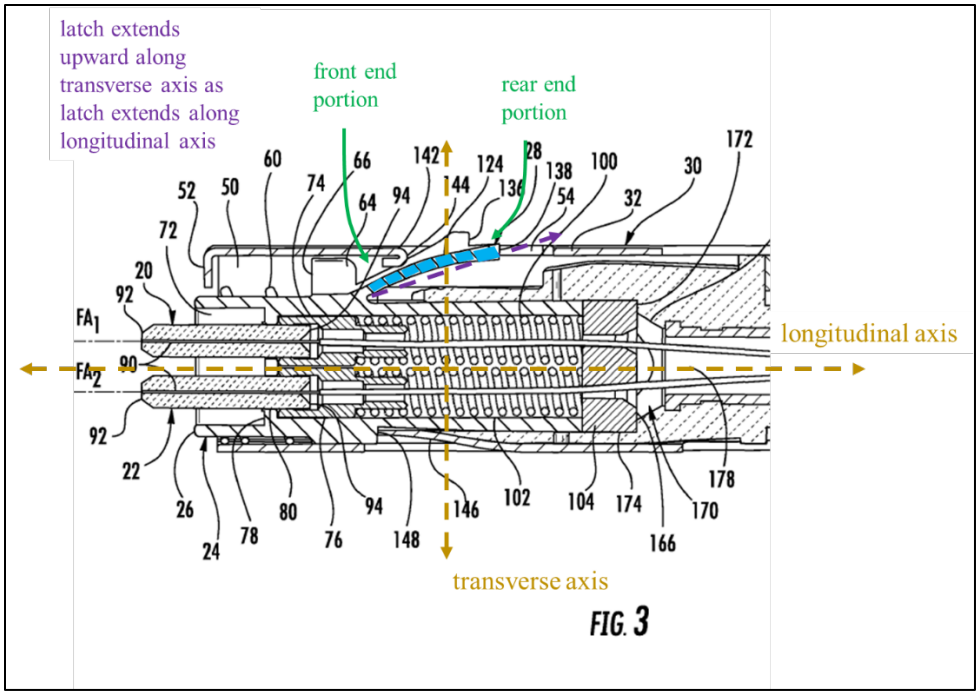

EX1004, FIG. 3 (annotated, excerpt).

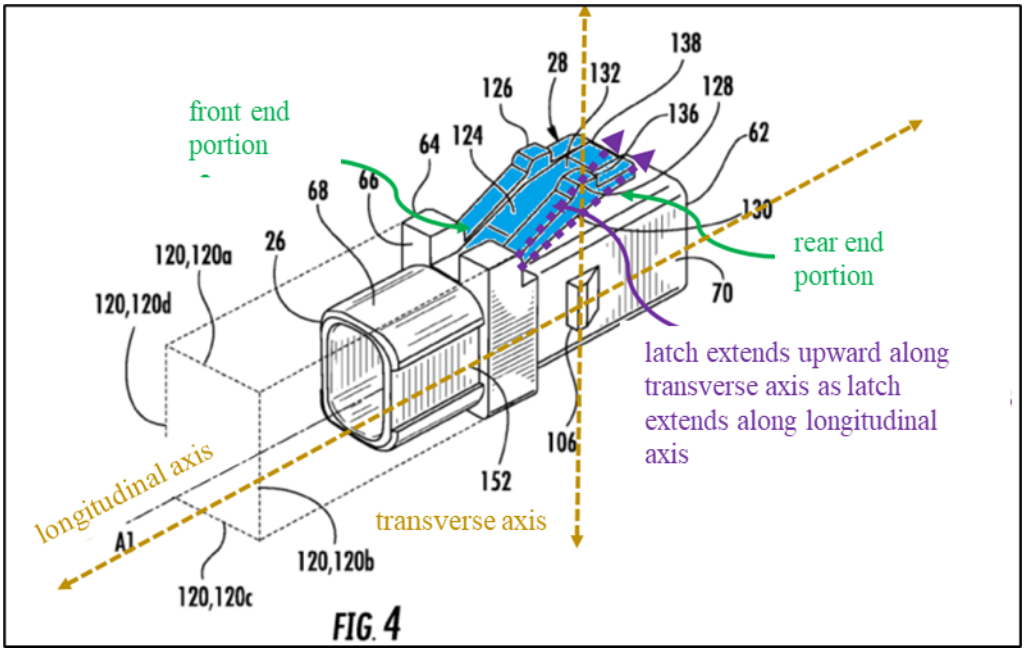

EX1004, FIG. 4 (annotated).

486. In my opinion, a POSITA would have understood that "front portion" and "rear end portion" denote different sections (as opposed to a particular point)

of the depressible latch. I believe a POSITA would find this to be the plain and ordinary meaning. Further, I believe a POSITA would understand these terms are being used to refer to portions/segments of the structure (as opposed to a particular front point and end point) throughout the specification and claims of the '369 Patent. *See, e.g.,* EX1001, Cls. 4-5 (using "front portion" to refer to a portion of structure that includes an opening).

487. Therefore, I believe that a POSITA would have understood this claim is satisfied at least by the latch arm 28 extending upwards in the transverse direction from the front portion through the elevated latching features 126, 128 of the rear portion of the latch arm 28.

488. Lee also illustrates a leading edge and trailing edge of the depressible latch because Lee shows latch arm 28 extends upward along the transverse axis between these edges as I have annotated above.

489. Accordingly, it is my opinion that a POSITA would have understood Lee discloses and anticipates claim 7.

H. Claim 8

1. Preamble – "The optical fiber connector as set forth in claim 7, wherein"

490. Claim 8 depends on claim 1 and claims 4-7, and for at least the reasons discussed above in reference to claims 1 and 4-7, Lee anticipates claim 1

and claims 4-7. *See* Sections XI.A, D-G. Additionally, for at least the reasons below, it is my opinion that Lee anticipates claim 8 of the '369 Patent.

2. Element [8.1] – "the rear end portion of the depressible latch is spaced apart above the top portion of the connector housing along the transverse axis."

491. In my opinion, a POSITA would have understood Lee discloses claim element [8.1]. A POSITA would have understood that the rear end portion of Lee's latch arm is spaced apart above the top portion of the connector housing along the transverse axis. *See, e.g.*, EX1004, ¶¶43-46, FIGS. 1-4.

492. For example, Lee explains "the latch arm 28 includes a lower side 130 facing the inner connector body 24" (EX1004, ¶43) and illustrates the lower side 130 of the rear portion of the latch arm 28 is spaced apart from the top portion of the inner and outer connector bodies 24, 36.

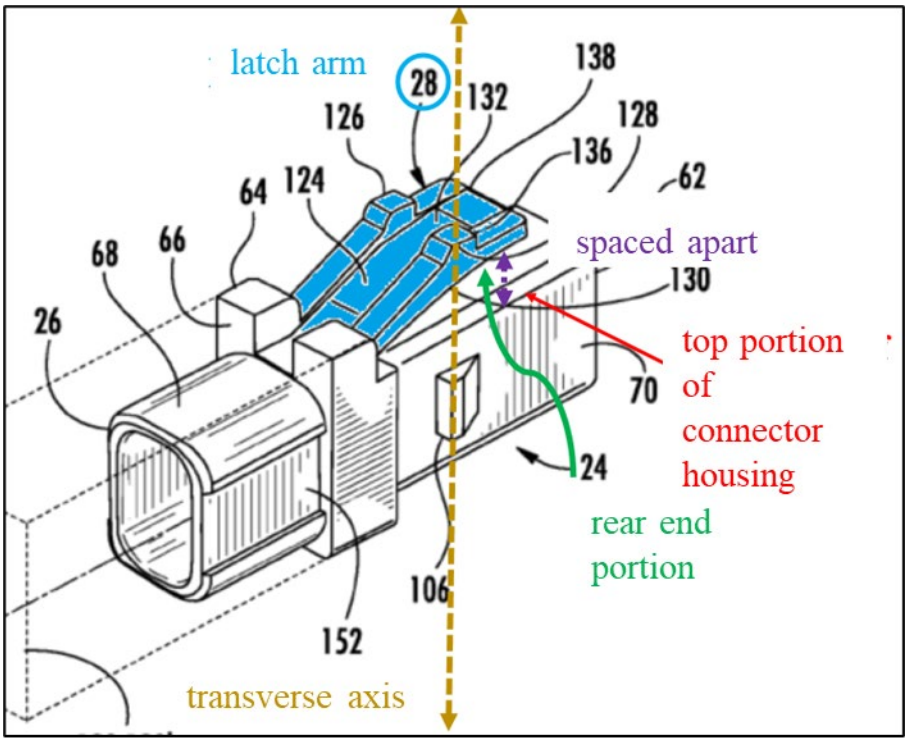

EX1004, FIG. 4 (annotated, excerpt).

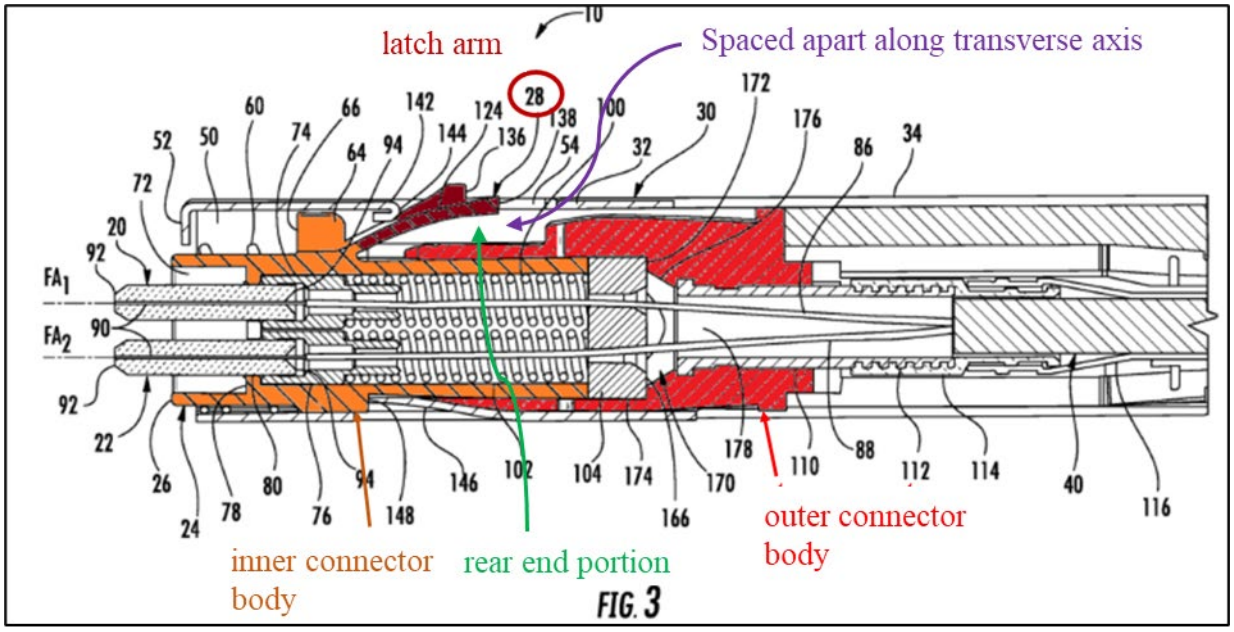

EX1004, FIG. 3 (annotated).

493. Accordingly, it is my opinion that a POSITA would have understood Lee discloses and anticipates claim 8.

I. Claim 9

1. Preamble – "The optical fiber connector as set forth in claim 8, wherein"

494. Claim 9 depends on claims 1 and 4-8, and for at least the reasons discussed above in reference to claims 1 and 4-8, Lee anticipates claims 1 and 4-8. *See* Sections XI.A, XI.D-H. Additionally, for at least the reasons below, it is my opinion that Lee anticipates claim 9 of the '369 Patent.

2. Element [9.1] – "the front end portion of the elongate arm includes an edge defining a front end of the opening."

495. In my opinion, a POSITA would have understood Lee discloses claim element [9.1] Lee discloses the front end portion of the elongate arm includes an edge defining a front of the opening and further that the upper surface of the latch arm opposes the edge. *See, e.g.*, EX1004, ¶¶47-48, FIGS. 1-5.

496. FLee explains and illustrates that the pushing feature 142 is an edge defining a front end of the opening 54, and that the pushing features 142 is included in the front portion of the elongate arm (specifically included in the housing portion 32 included in handle 30). *See* EX1004, FIG. 5. Additionally, the rounded surface 144 of the pushing feature 142 is such an edge. *See* EX1004, FIGS 3, 5. The pushing feature 142 including the rounded surface 144 are provided to be opposite the upper surface of the ramp 124 of the latch arm 28 because the pushing feature 142 contacts the upper surface of the ramp 124 of the latch arm 28 to actuate the latch arm 28 when the handle is pulled rearwardly. *See,*

e.g., EX1004, ¶47 ("the rounded surface 144 contacts and slides along the ramp 124 to cause the latch arm 28 to flex toward the inner connector body 124").

497. I have annotated Lee Figures 3 and 5 to show the edge and upper surface of the latch arm 28, but these features may also be seen in Lee Figures 1, 2, and 4.

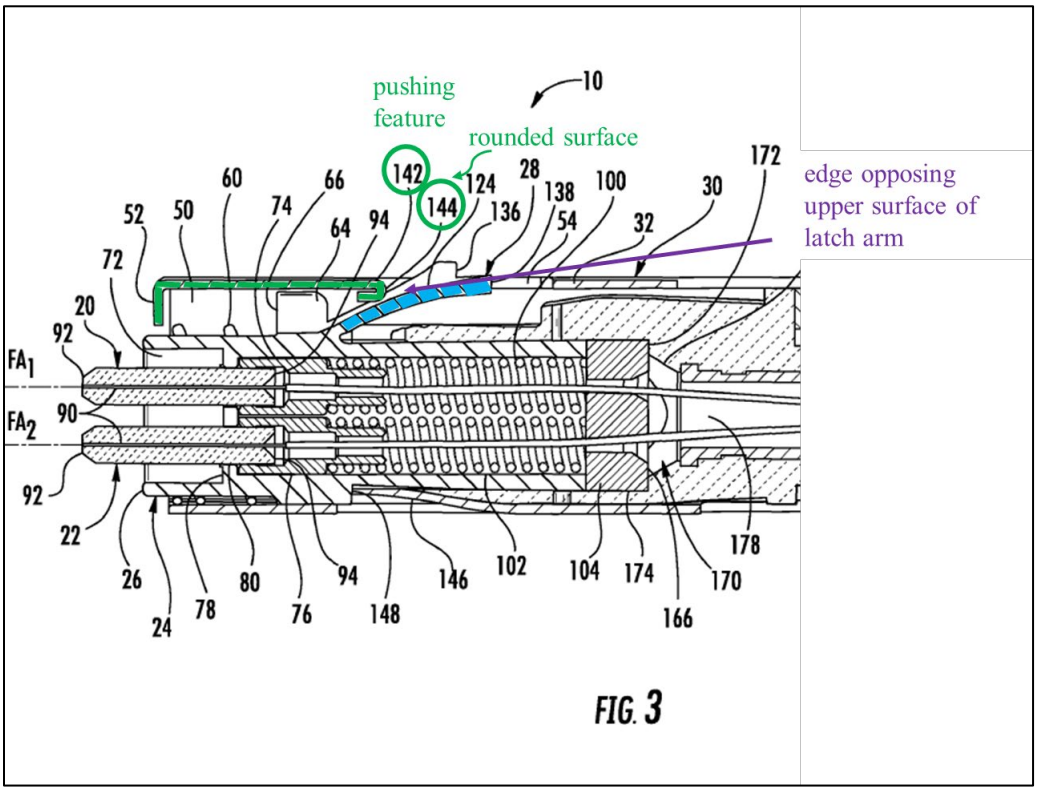

EX1004, FIG. 3 (annotated, excerpt).

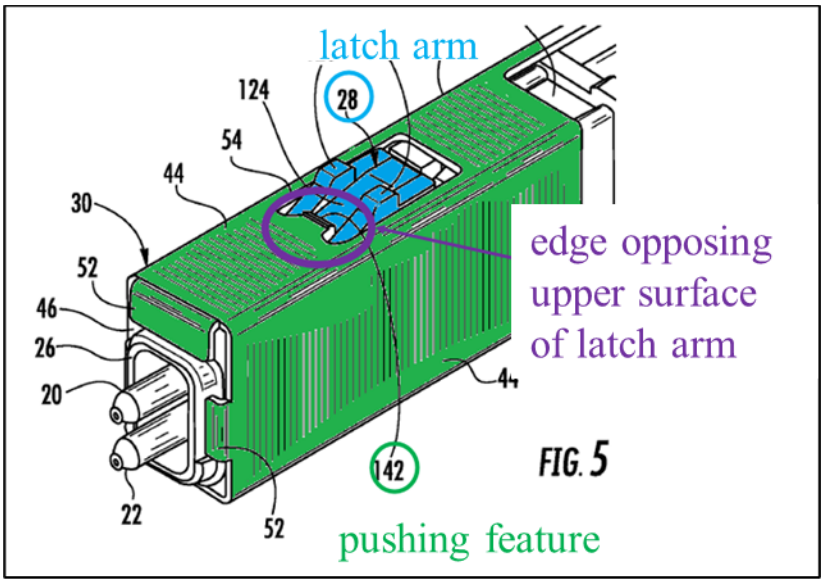

EX1004, FIG. 5 (annotated).

498. Accordingly, it is my opinion that a POSITA would have understood Lee discloses and anticipates claim 9.

J. Claim 10

1. Preamble – "The optical fiber connector as set forth in claim 9, wherein"

499. Claim 10 depends on claims 1 and 4-9, and for at least the reasons discussed above in reference to claims 1 and 4-9, Lee anticipates claims 1 and 4-9. *See* Sections XI.A, XI.D-I. Additionally, for at least the reasons below, it is my opinion that Lee anticipates claim 10 of the '369 Patent.

2. Element [10.1] – "the depressible latch has an upper surface, the edge opposing the upper surface."

500. In my opinion, a POSITA would have understood Lee discloses claim element [10.1]. *See, e.g.*, EX1004, ¶¶47-48, FIGS. 1-5.

501. For example, Lee explains and illustrates that the pushing feature 142 is an edge defining a front end of the opening 54 and that the pushing features 142 is included in the front portion of the elongate arm. *See* EX1004, ¶65. Additionally, the rounded surface 144 of the pushing feature 142 is such an edge. *See* EX1004, ¶47. The pushing feature 142 including the rounded surface 144 are provided to be opposite the upper surface of the ramp 124 of the latch arm 28 because the pushing feature 142 contacts the upper surface of the ramp 124 of the latch arm 28 to actuate the latch arm 28 when the handle is pulled rearwardly. *See, e.g.*, EX1004, ¶47 ("the rounded surface 144 contacts and slides along the ramp 124 to cause the latch arm 28 to flex toward the inner connector body 124").

502. I have annotated Lee Figures 3 and 5 to show the edge and upper surface of the latch arm 28, but these features may also be seen in Lee Figures 1, 2, and 4.

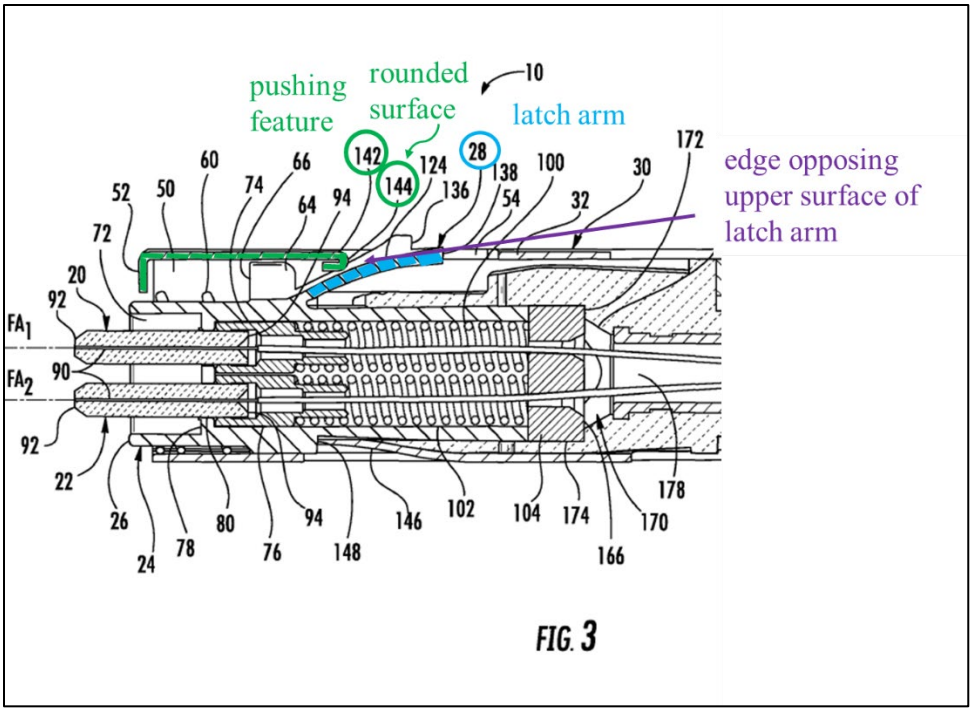

EX1004, FIG. 3 (annotated, excerpt).

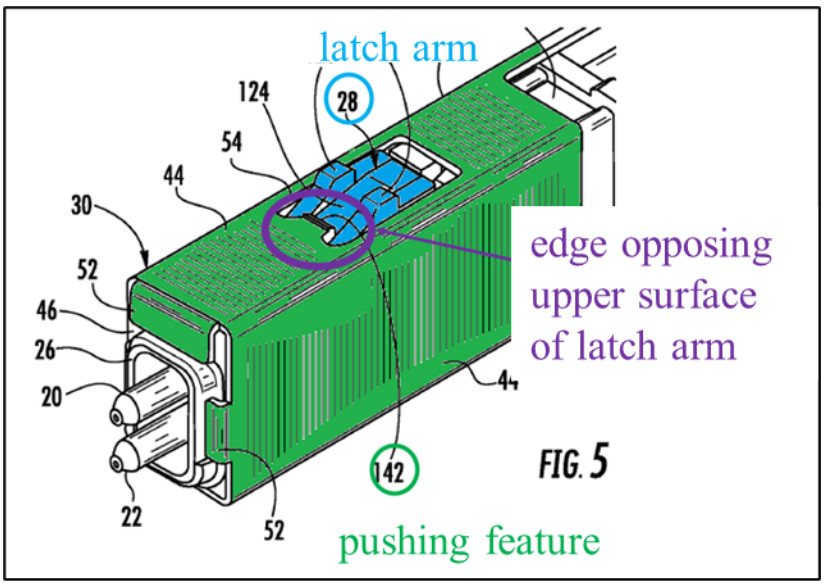

EX1004, FIG. 5 (annotated).

503. Accordingly, it is my opinion that a POSITA would have understood Lee discloses and anticipates claim 10.

K. Claim 14

1. Preamble – "The optical fiber connector as set forth in claim 10, wherein"

504. I note claim 14 is addressed out of order because none of claims 11-13 depend from claims 9 or 10.

505. Claim 14 depends on claims 1 and 4-10, and for at least the reasons discussed above in reference to claims 1 and 4-10, Lee anticipates claims 1 and 4-10. *See* Sections XI.A, XI.D-J. Additionally, for at least the reasons below, it is my opinion that Lee anticipates claim 14 of the '369 Patent.

2. Element [14.1] – "the elongate arm is configured to be pulled rearward along the longitudinal axis with respect to the connector housing whereby the edge slides longitudinally along the upper surface to depress the depressible latch."

506. In my opinion, a POSITA would have understood Lee discloses claim element [14.1]. As discussed above in Sections XI.I-J, a POSITA would have understood that Lee discloses the front end portion of the elongate arm includes an edge defining a front of the opening and further that the upper surface of the latch arm opposes the edge. *See, e.g.*, EX1004, ¶¶47-48, FIGS. 1-5. A POSITA would have understood Lee to disclose that the handle 30 is configured to be pulled rearward along the longitudinal axis with respect to the connector housing (the inner and outer connector bodies 24, 36) whereby the edge slides longitudinally

along the upper surface of the latch arm 28 to depress the latch arm 28. *See, e.g.,* EX1004, ¶¶30, 32, 43, 47-48, FIGS. 1-5.

507. For example, Lee explains and illustrates that the pushing feature 142 is an edge defining a front end of the opening 54 and that the pushing features 142 is included in the front portion of the elongate arm. *See* EX1004, ¶47. Additionally, the rounded surface 144 of the pushing feature 142 is such an edge. *See* EX1004, ¶47. The pushing feature 142 including the rounded surface 144 are provided to be opposite the upper surface of the ramp 124 of the latch arm 28 because the pushing feature 142 contacts the upper surface of the ramp 124 of the latch arm 28 to actuate the latch arm 28 when the handle is pulled rearwardly. *See, e.g.*, EX1004, ¶47 ("the rounded surface 144 contacts and slides along the ramp 124 to cause the latch arm 28 to flex toward the inner connector body 124").

508. I have annotated Lee Figures 3 and 5 to show the edge and upper surface of the latch arm 28, but these features may also be seen in Lee Figures 1, 2, and 4.

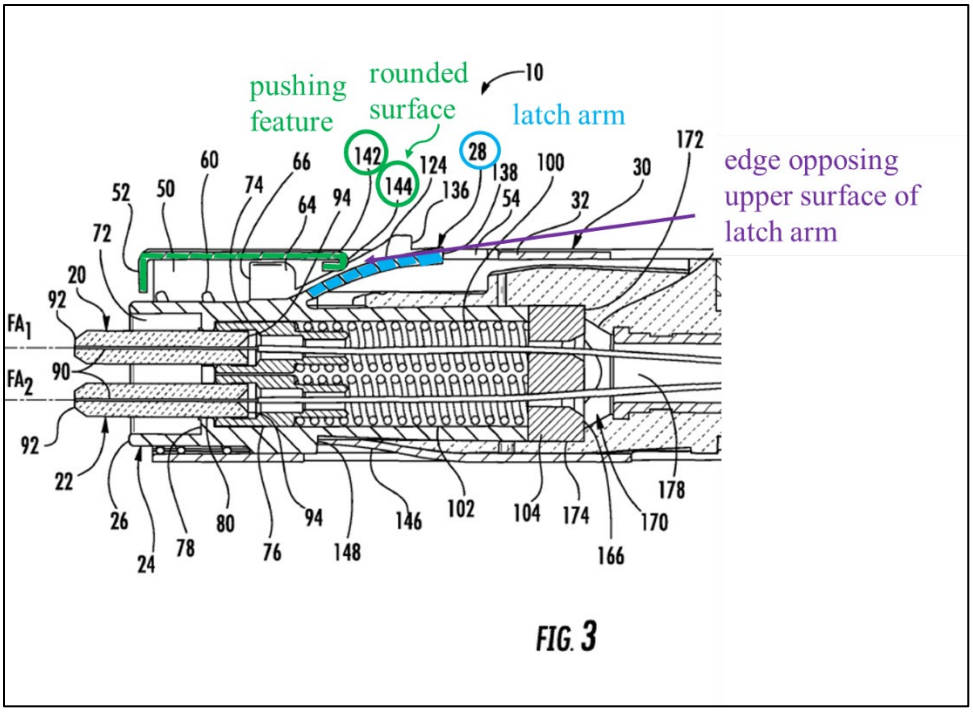

EX1004, FIG. 3 (annotated, excerpt).

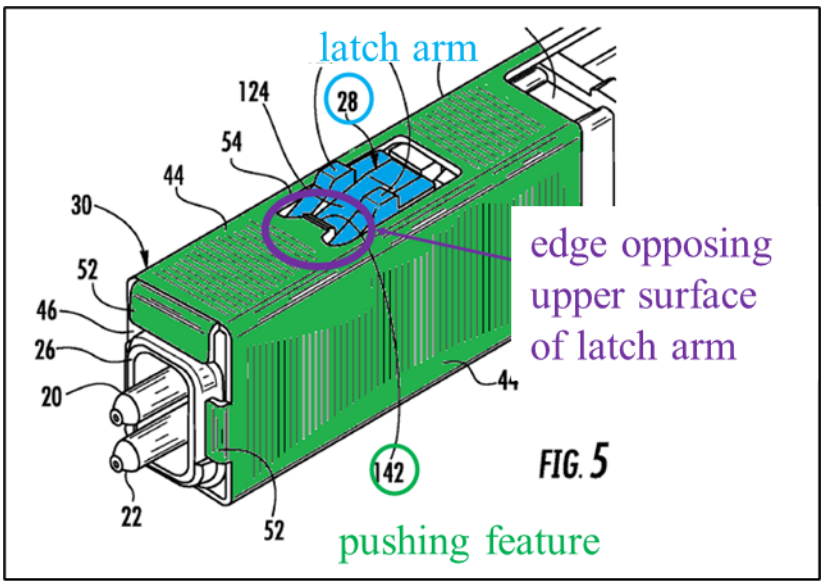

EX1004, FIG. 5 (annotated).

509. Lee details how the latch arm 28 is actuated by pulling the handle 30 rearwardly. *See* Section XI.A.6 (element [1.5]). This illustrates that Lee's pushing feature 142 and rounded surface 144 slide longitudinally along the upper surface of

the latch arm 28 (*i.e.*, along the ramp 124) to depress the latch arm 28 when the handle 30 is pulled rearwardly with respect to the connector housing (the inner and outer connector bodies 24, 36). *See also, e.g.,* EX1004, ¶47 ("When the handle 30 is moved rearwardly relative to the inner connector body 24, the rounded surface 144 contacts and slides along the ramp 124 to cause the latch arm 28 to flex toward the inner connector body 24.")

510. Accordingly, it is my opinion that a POSITA would have understood Lee discloses and anticipates claim 14.

L. Claim 11

1. Preamble – "The optical fiber connector as set forth in claim 1, wherein"

511. Claim 11 depends on claim 1, and for at least the reasons discussed above in reference to claim 1, Lee anticipates claim 1. *See* Section XI.A. Additionally, for at least the reasons below, it is my opinion that Lee anticipates claim 11 of the '369 Patent.

2. Element [11.1] – "the connector housing includes a front body and a back body."

512. In my opinion, a POSITA would have understood Lee discloses claim element [11.1]. Lee discloses the connector housing that includes a front body and a back body at least as I have explained above when I first discussed the "connector housing" element of claim 1. *See* Section XI.A.4 (discussing element [1.3]).

513. To elaborate briefly, for example, Lee's connector housing includes the inner connector body 24 (a front body) and the outer connector body 36 (a back body) which are coupled together to collectively form a connector housing. *See, e.g.*, EX1004, ¶30 ("The connector 10 also includes an outer connector body 36 coupled to the inner connector body 24 within the housing portion 32 of the handle 30").

514. Figures 2-3 of Lee show the inner connector body 24 (the front body) and the outer connector body 36 (the back body).

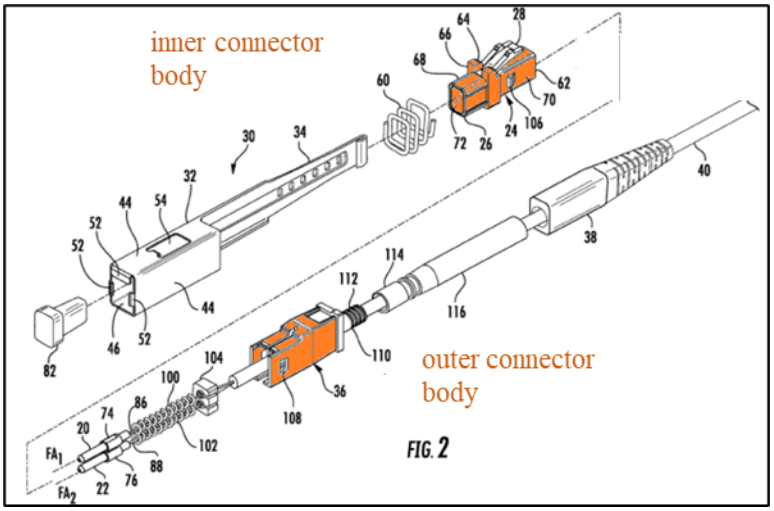

EX1004, FIG. 2 (annotated).

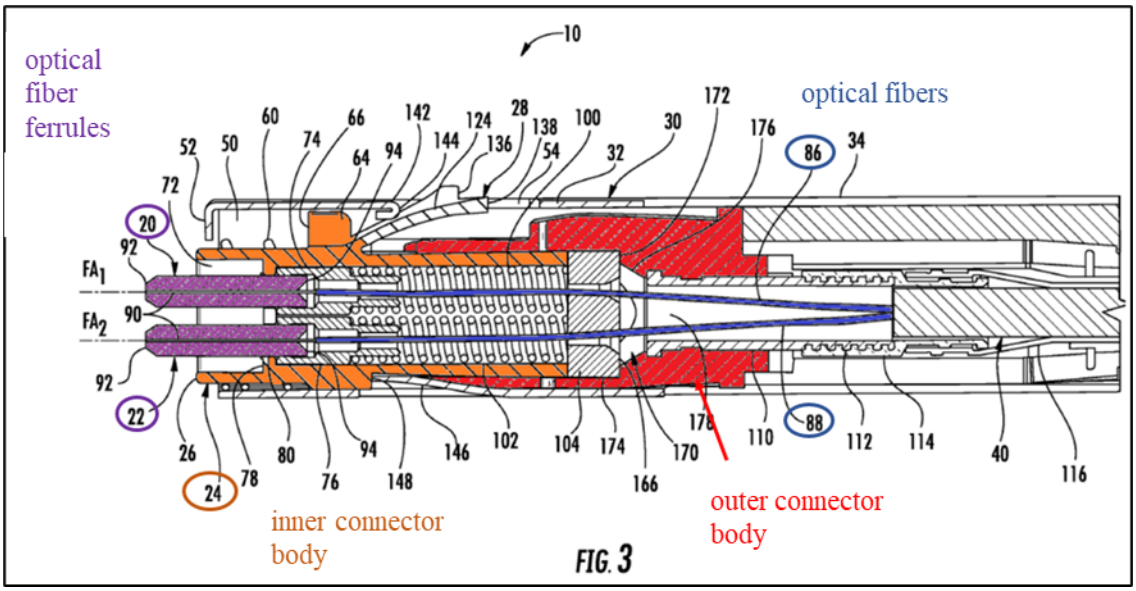

EX1004, FIG. 3 (annotated).

515. Accordingly, it is my opinion that a POSITA would have understood Lee discloses and anticipates claim 11.

M. Claim 12

1. Preamble – "The optical fiber connector as set forth in claim 11, further comprising"

516. Claim 12 depends on claims 1 and 11, and for at least the reasons discussed above in reference to claims 1 and 11, Lee anticipates claims 1 and 11. *See* Sections XI.A, XI.L. Additionally, for at least the reasons below, it is my opinion that Lee anticipates claim 12 of the '369 Patent.

2. Element [12.1] – "a single cable boot extending rearward from the back body."

517. In my opinion, a POSITA would have understood Lee discloses claim element [12.1]. *See, e.g.*, EX1004, ¶¶29-30, 40, 55, 58, FIGS. 1-3.

518. Lee's connector housing is comprised of the inner connector body 24 and the outer connector body 36 (*see* Section XI.A.3). Lee's boot also extends "rearward from the connector housing" as recited in claim 12. *See* EX1004, ¶30. For example, Lee states "[a] boot 38 is coupled to the outer connector body 36 outside of the housing portion 32." EX1004, ¶30.

519. Lee Figures 1-3 show the boot 38 is a single cable boot extending rearward from the outer connector body 36, which is part of the connector housing. EX1004, FIGS. 1, 2; *see also* EX1004, FIG. 3, ¶¶40, 55, 58 (describing and illustrating additional details regarding the cable 40 and the connection of the boot 38 to the outer connector body 36 of the connector housing)

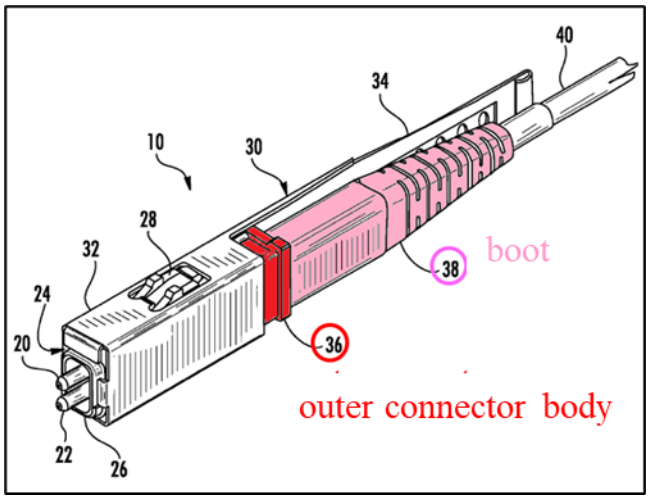

EX1004, FIG. 1 (annotated, excerpt).

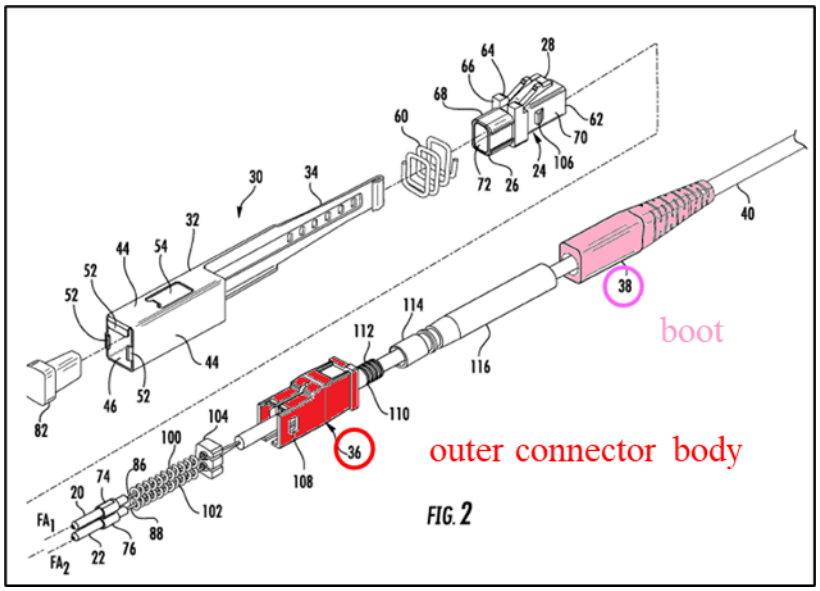

EX1004, FIG. 2 (annotated).

520. Accordingly, it is my opinion that a POSITA would have understood Lee discloses and anticipates claim 12.

N. Claim 13

1. Preamble – "The optical fiber connector as set forth in claim 1, further comprising"

521. Claim 13 depends on claim 1, and for at least the reasons discussed above in reference to claim 1, Lee anticipates claim 1. *See* Section XI.A. Additionally, for at least the reasons below, it is my opinion that Lee anticipates claim 13 of the '369 Patent.

2. Element [13.1] – "a single cable boot extending rearward from the connector housing."

522. In my opinion, a POSITA would have understood Lee discloses claim element [13.1]. *See, e.g.*, EX1004, ¶¶29-30, 40, 55, 58, FIGS. 1-3.

523. Lee's connector housing is comprised of the inner connector body 24 and the outer connector body 36 (*see* Section XI.A.4). Lee's boot also extends "rearward from the connector housing" as recited in claim claim 13. *See* EX1004, ¶30. For example, Lee states "[a] boot 38 is coupled to the outer connector body 36 outside of the housing portion 32." EX1004, ¶30.

524. Lee Figures 1-3 show the boot 38 is a single cable boot extending rearward from the outer connector body 36, which is part of the connector housing. EX1004, FIGS. 1, 2; *see also* EX1004, FIG. 3, ¶¶40, 55, 58 (describing and illustrating additional details regarding the cable 40 and the connection of the boot 38 to the outer connector body 36 of the connector housing).

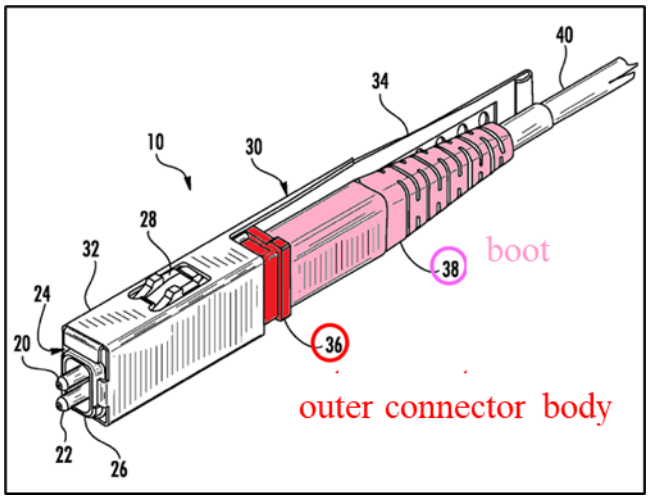

EX1004, FIG. 1 (annotated, excerpt).

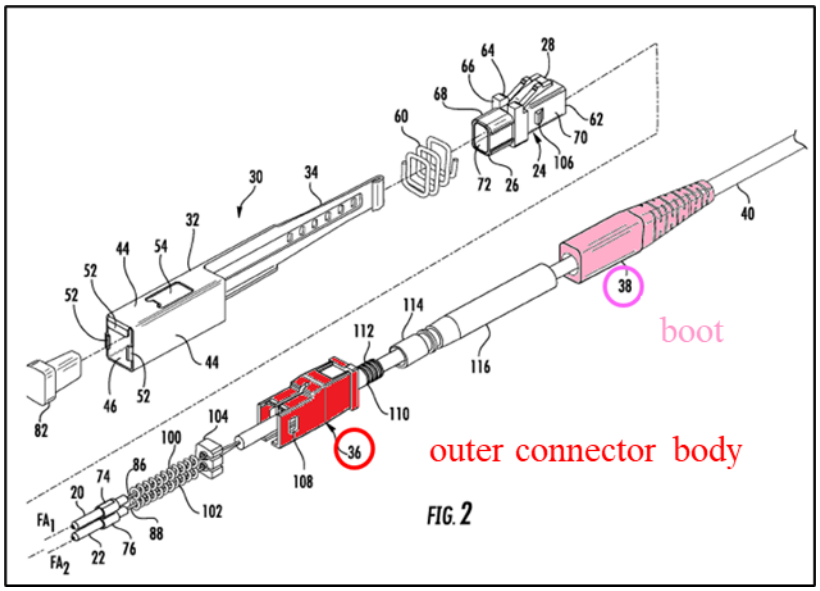

EX1004, FIG. 2 (annotated).

525. A POSITA would have understood Lee discloses claim element [13.1].

526. Accordingly, I believe that a POSITA would have understood Lee discloses and anticipates claim 13.

O. Claim 15

1. Preamble – "The optical fiber connector as set forth in claim 14, wherein"

527. Claim 15 depends on claims 1, 4-10, and 14, and for at least the reasons discussed above in reference to claim 1, claims 4-10, and claim 14, Lee anticipates claim 1, claims 4-10, and claim 14. *See* Sections XI.A, XI.D-K. Additionally, for at least the reasons below, it is my opinion that Lee anticipates claim 15 of the '369 Patent.

2. Element [15.1] – "the guide defines a groove extending along the longitudinal axis."

528. The subject matter recited in claim element [15.1] is identical to claim element [2.1]. Accordingly, for at least the reasons set forth above with respect to claim 2, it is my opinion that Lee discloses and anticipates claim 15. *See* Section XI.B.

P. Claim 16

1. Preamble – "The optical fiber connector as set forth in claim 15, wherein"

529. Claim 16 depends on claims 1, 4-10, and 14-15, and for at least the reasons discussed above in reference to claim 1, claims 4-10, and claims 14-15, Lee anticipates claim 1, claims 4-10, and claims 14-15. *See* Sections XI.A, IXI.D-K, XI.O. Additionally, for at least the reasons below, it is my opinion that Lee anticipates claim 16 of the '369 Patent.

2. Element [16.1] – "the elongate arm is slidably received in the groove."

530. The subject matter recited in claim element [16.1] is identical to claim element [3.1]. Accordingly, for at least the same reasons set forth above with respect to claim 3, it is my opinion that Lee discloses and anticipates claim 16. *See* Section XI.C.

Q. Claim 17

1. Preamble – "The optical fiber connector as set forth in claim 15, wherein"

531. Claim 17 depends on claims 1, 4-10, and 14-15, and for at least the reasons discussed above in reference to claim 1, claims 4-10, and claims 14-15, Lee anticipates claim 1, claims 4-10, and claims 14-15. *See* Sections XI.A, XI.D-K, XI.O. Additionally, for at least the reasons below, it is my opinion that Lee anticipates claim 17 of the '369 Patent.

2. Element [17.1] – "the connector housing includes a front body and a back body."

532. The subject matter recited in claim element [17.1] is identical to claim element [11.1]. Accordingly, for at least the reasons set forth above with respect to claim 11, it is my opinion that Lee discloses and anticipates claim 17. *See* Section XI.L.

R. Claim 20

533. The subject matter of independent claim 20 simply combines elements from claim 1, from the preamble through element [1.5] but excluding element [1.6], with the additional features of claims 4-10 and 14 that I have already addressed in Lee. Accordingly, for at least the reasons set forth above with respect to claim 1, except for claim element [1.6], claims 4-10, and claim 14, it is my opinion that Lee discloses and anticipates claim 20. *See* Sections XI.A.1-6, XI.D-K. (*i.e.*, all elements of claim 1 except [1.6] and dependent claims 4-10 and 14).

S. Claim 21

534. The subject matter of independent claim 21 is identical to claim 1, except claim 21 does not define a groove and instead adds two recitations related to the elongated arm and a push/pull tab. Assigning identical numbering to claim 21 as to claim 1. Therefore, for at least the reasons discussed above, Lee discloses and anticipates the preamble through element [21.5]. *See* Sections XI.A.1-6. (*i.e.*, all elements of claim 1 except [1.6]). Additionally, for at least the reasons below, it is my opinion that Lee discloses and anticipates the remaining two limitations, numbered element [21.6] and [21.7].

1. Element [21.6] – "wherein the elongate arm comprises a front end portion and a rear end portion spaced apart along the longitudinal axis;"

535. In my opinion, a POSITA would have understood Lee discloses claim element [21.6]. Lee discloses this element for the same reasons set forth above regarding claim 4. *See* Section XI.D (addressing identical claim language). To briefly reiterate for context, Lee discloses a handle 30, which is an elongate arm that includes a front portion and a rear portion spaced apart along the longitudinal axis. Specifically, the grip portion 34 of Lee is a rear end portion and the housing portion 32 of Lee is a front end portion. *See, e.g.,* EX1004, ¶¶30-32.

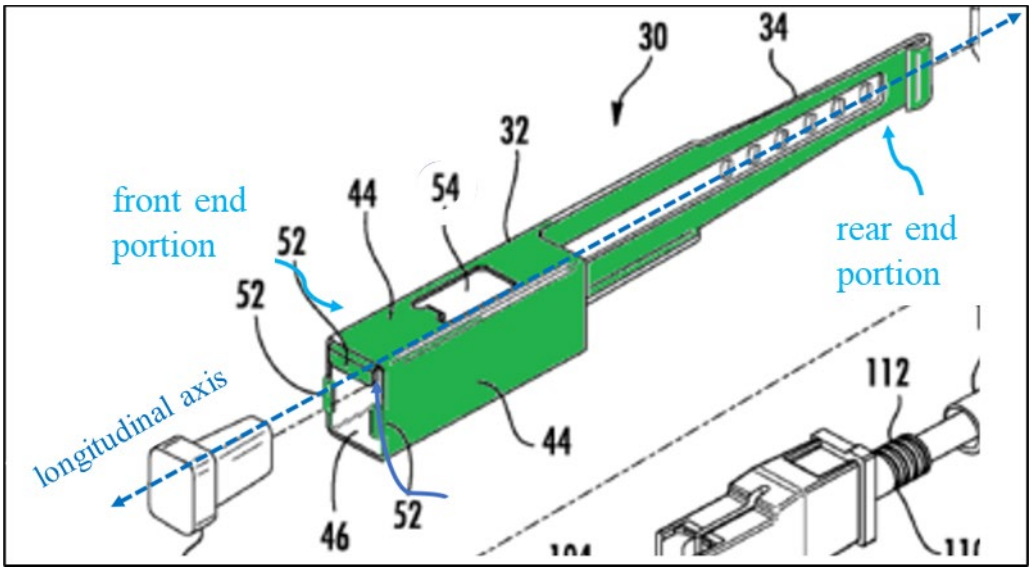

EX1004, FIG. 2 (annotated, excerpt).

536. Accordingly, it is my opinion that a POSITA would have understood Lee discloses element [21.6].

2. Element [21.7] – "the optical fiber connector further comprising a push/pull tab extending from the rear end portion of the elongate arm."

537. In my opinion, a POSITA would have understood Lee discloses claim element [21.7]. *See, e.g.*, EX1004, FIGS. 1-2, 14, ¶¶32, 70.

538. The '369 Patent provides several examples of "push-pull tabs" throughout its description and figures. *See, e.g.,* EX1001, FIGS. 4-11 (showing examples of push-pull tabs 410-1110), 19A-D (push-pull tabs 1930, 1960), FIG. 31 (push-pull tab 2107), FIG. 44A (push-pull tab 3707), FIGS. 53-61 (disclosing various push-pull tabs); *see also generally* EX1001 (describing these embodiments in the specification). The '369 Patent further explains that "[a]s would be

understood by one skilled in the art, the push-pull tab 410 enables removal of the connector from a receptacle without requiring additional tools." EX1001, 7:35-38.

539. Therefore, I believe a POSITA would have understood an end portion of the elongate arm configured to be grasped (*e.g.*, pinched or held by a user's fingers) for pushing and pulling the elongate arm would be a "push/pull tab" as recited in this claim.

540. As the '369 Patent itself discloses several different types of push/pull tabs, I do not believe that a POSITA would have understood the claimed push/pull tab to require any particular structure or configuration; rather, it simply must extend from the rear portion of the elongate arm and allow a user to push/pull the elongate arm.

541. Finally, I note that the '369 Patent does not provide any further explanation regarding the push/pull tab "extending from the rear portion of the elongate arm." *See generally* EX1001.

542. Based on the examples of push-pull tabs provided in the '369 patent, I believe that a POSITA would have understood the push-pull tab could be the very final protruding component (*e.g.*, as the labeling of Figures 19A-D of the '369 Patent indicates) or could include a portion of the elongated structure (*e.g.*, as the labeling of Figures 53-61 of the '369 Patent indicates). Lee discloses either configuration.

543. Lee discloses such a push/pull tab. For example, the handle 30 of Lee includes a push/pull tab extending from the rear portion of the elongate arm as shown, *e.g.*, in Figure 2.

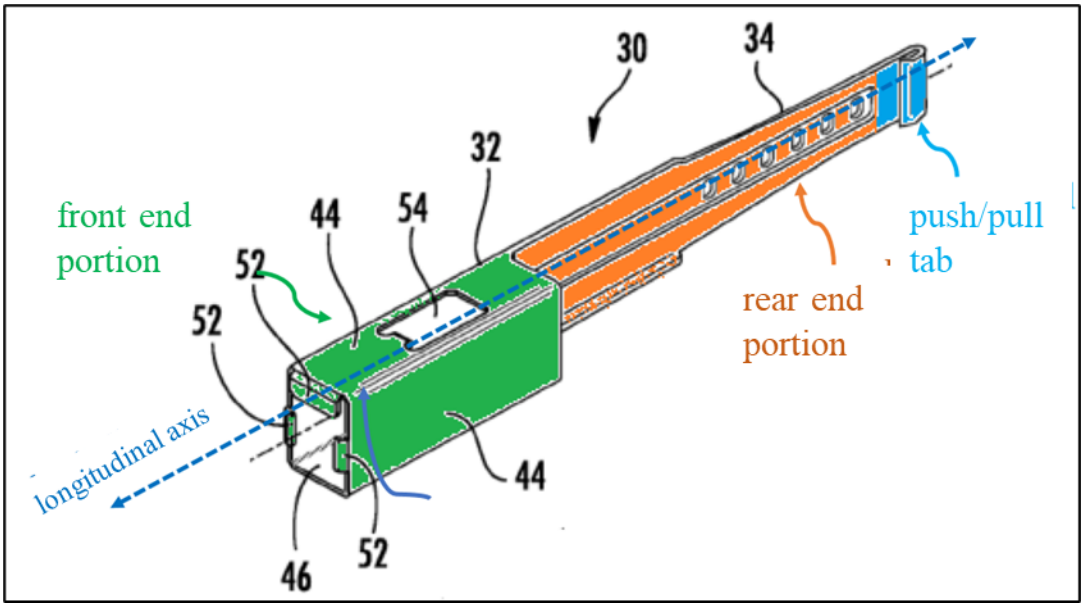

EX1004, FIG. 2 (annotated, excerpt), (note that the "push-pull tab" could also be defined as only the end of the protrusion where there is overlapping material, *i.e.*, the thicker end portion; this would also satisfy this element in the same manner).

544. Accordingly, it is my opinion that a POSITA would have understood Lee discloses claim element [21.7]. Thus, it is my opinion that a POSITA would have understood Lee anticipates the entirety of claim 21.

XII. GROUND 4: LEE RENDERS OBVIOUS CLAIM 18, 19, 21 AND 22

545. For at least the reasons discussed below, it is my opinion that a POSITA would have understood Lee renders obvious all of the features in claims 18, 19, 21, and 22 of the '369 Patent.

A. Claim 18

1. Preamble – "The optical fiber connector as set forth in claim 17, wherein"

546. Claim 18 depends on claims 1, 4-10, 14-15, and 17, and for at least the reasons discussed above in reference to claim 1, claims 4-10, claims 14-15, and claim 17, Lee anticipates claim 1, claims 4-10, claims 14-15, and claim 17. *See* Sections XI.A, XI.D-K, XI.O, Section XI.Q. Additionally, for at least the reasons below, it is my opinion that Lee renders obvious claim 18 of the '369 Patent.

2. Element [18.1] – "the front body includes a recess and the back body includes a protrusion received in the recess to connect the back body to the front body."

547. It is my opinion that Lee discloses claim element [18.1]. Lee discloses "the outer connector body 36 is designed to be snapped onto the back portion 70 of the inner connector body 24." EX1004, ¶39. In particular, "[l]atching features in the form of ramps or shoulders 106 are provided on the back portion 70 of the inner connector body 24" and the outer connector body 36 includes "openings 108 that cooperate with the shoulders 106 to couple the inner connector body 24 to the outer connector body 36." EX1004, ¶39. These shoulders 106 (*i.e.*, protrusions) are received in the openings 108 (*i.e.*, recesses) to connect the outer connector body 36 (the back body) to the inner connector body 24 (the front body). *See* EX1004, ¶39.

548. Lee Figure 2 illustrates the protrusion and recess on one side of the connector bodies 24, 36.

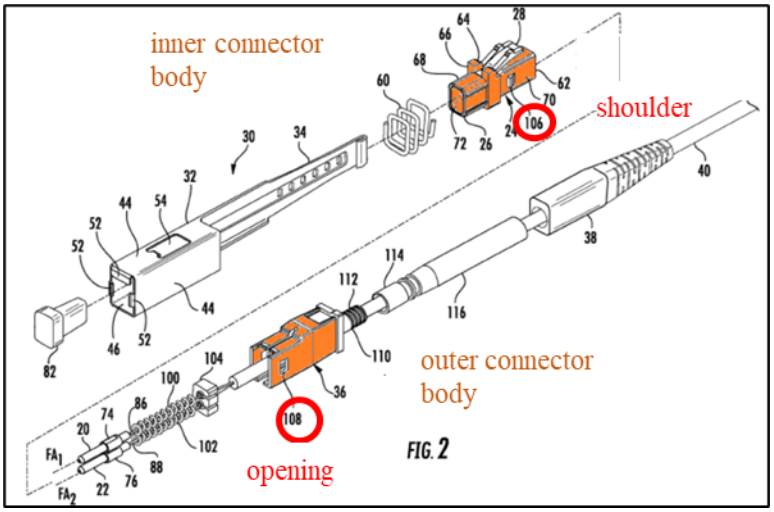

EX1004, FIG. 2 (annotated).

549. Lee further discloses the "outer connector body 36 may be coupled to the inner connector body 24 <u>in any suitable manner</u>" and then proceeds to describe the connection "in the embodiment shown [in FIG. 2]." EX1004, ¶39 (emphasis added).

550. Therefore, I believe a POSITA would have understood that Lee suggests that the shoulder 106 and opening 108 in other embodiments could be swapped, such that the shoulder 106 is on the outer connector body 36 and the opening 108 is on the inner connector body 24 as recited in claim 18. Thus, it is my opinion Lee renders obvious claim 18.

B. Claim 19

1. Preamble – "The optical fiber connector as set forth in claim 18,"

551. Claim 19 depends on claims 1, 4-10, 14-15, and 17-18, and for at least the reasons discussed above in reference to claim 1, claims 4-10, claims 14-15, and claims 17-18, Lee anticipates claim 1, claims 4-10, claims 14-15, and claim 17. *See* Section XI.A, XI.D-K, XI.O, XI.Q. Lee also renders obvious claim 18. *See* Section XII.A. Additionally, for at least the reasons below, it is my opinion that Lee renders obvious claim 19 of the '369 Patent.

2. Element [19.1] – "further comprising a single cable boot extending rearward from the connector housing."

552. The subject matter recited in this dependent claim is identical to claim 13. Accordingly, for at least the reasons set forth above with respect to claim 13, it is my opinion that Lee discloses claim 19.*See* Section XI.N.

553. Any modification of Lee's Figure 2 embodiment to swap the shoulders 106 and the openings 108 for the connection between the connector bodies 24, 36 has no effect on the details of the single cable boot that extends rearward from the connector housing, and so this element remains disclosed by Lee in the same manner as discussed above for claim 13. Therefore, it is my opinion that a POSITA would have understood claim 19 is rendered obvious over Lee.

C. Claim 21

554. Concerning claim element [21.7], to any extent Patent Owner may argue that the folded part of Lee's grip portion 34 (*see* Section XI.S.2) is not a push-pull tab a claimed, it would have been obvious to modify the connector 10 to have the knob 518 of Lee's connector 510.

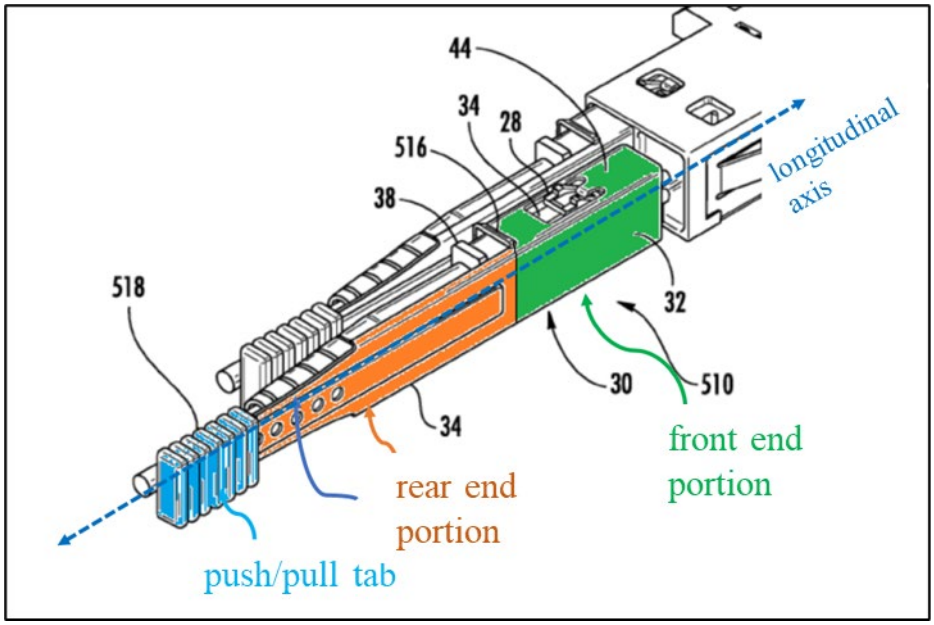

EX1004, FIG. 14 (annotated, excerpt).

555. In the same paragraph that describes the knob 518, Lee begins the description of Figure 14 by explaining that "[t]hose skilled in the art will appreciate that other modifications and variations can be made without departing from the spirit or scope of the invention…" EX1004, ¶70. Lee thus explicitly prompts implementing the features depicted in Figure 14 as modifications to other embodiment. In view of that prompt, and with the motivation to make the grip portion 34 easier to grasp, a POSITA would have found it obvious to apply the

knob 518 to the proximal end of the grip portion 34 of the handle 30 of the connector 10. In particular, a POSITA would have found this modification obvious because, in my opinion, a POSITA would have understood that applying the block or knob 518 to the grip portion 34 of Figures 1-2 would have provided the benefit in making the handle 30 "easier to grasp" (as explicitly disclosed in Lee) and would have been an obvious modification, implementable with reasonable expectation of success because it simply involves adding a gripping portion to the end of an elongated structure. EX1004, ¶70.

556. Because the connector 10 has the features of the preamble of claim 21 through claim element [21.6] (*see* Sections XI.S and XI.S.1), and the knob 518 is a push-pull tab as recited in claim element [21.7], the result of such a modification would disclose every feature of claim 21. Therefore, it is my opinion a POSITA would have understood claim 21 is rendered obvious over Lee.

D. Claim 22

557. The subject matter of independent claim 22 simply combines preceding claim elements from claim 1, except element [1.6], with dependent claims 11 and 18 that I have already addressed in Lee. *See* Sections XI.A.1-6, XI.L, XII.A. (*i.e.*, all elements of claim 1, except [1.6], and dependent claims 11 and 18).

558. Accordingly, for at least the reasons discussed above, it is my opinion Lee renders obvious claim 22.

XIII. CONCLUSION

559. For at least the reasons set forth above, I am of the opinion the Challenged Claims 1-22 would have been anticipated and/or obvious to a POSITA at the time of invention of the ’369 Patent based at least on the discussed prior art.

I understand that this Declaration is to be filed as evidence in a contested IPR proceeding before the Patent Trial and Appeal Board. I acknowledge that I may be subject to cross-examination in the case and that cross-examination will take place within the United States. If cross-examination is required of me, I will appear for cross-examination within the United States during the time allotted for cross-examination.

I hereby declare under penalty of perjury that the foregoing is true and correct, that all statements made herein of my own knowledge are true, and that all statements made on information and belief are believed to be true; and further that these statements were made with the knowledge that willful false statements and the like are punishable by fine or imprisonment, or both, under 18 U.S.C. § 1001 and may jeopardize the validity of the application or any patent issuing thereon. If called to testify as to the truth of the matters stated herein, I could and would testify competently.

Date: January 5, 2024 James F. Brennan III

James F. Brennan III, Ph.D.