Interface Specification for MDC Receptacle

Rev. 4

February 6, 2020

Abstract

This specification defines the MDC optical connector interface for receptacles to be used in OSFP, QSFP-DD or SFP-DD module applications.

Point of contact:

Jeff Hendrick
US Conec
1138 25th St SE
Hickory, NC 28602
jeffhendrick@usconec.com
828-624-6503

This specification is provided "AS IS" with NO WARRANTIES whatsoever and therefore the provision of this specification does not include any warranty of merchantability, noninfringement, fitness for a particular purpose, or any other warranty otherwise arising out of any proposal, specification or sample. The authors further disclaim all liability, including liability for infringement of any proprietary rights, relating to use of information in this specification. No license, express or implied, by estoppel or otherwise, to any intellectual property rights is granted herein.

US Conec EX1015
IPR2024-00117
U.S. Patent No. 11,333,836

Revision	Date	Changes
4	2/6/20	Added reference to OSFP MSA. Refined tolerances of receptacle interface dimensions in both tables.
3	3/14/19	Removed confidentiality statement from page 1. Updated Figure 4.2: Corrected drawing – top view.
2	2/6/2019	Updated Table 3.3: Dimension A changed to 3.1 mm. Dimension M changed to 3.9 mm. Updated Figure 4.2: Added additional views and dimensions. Updated Table 4.3: Added dimensions notated in Figure 4.2.
1	1/30/2019	Initial Release.

TABLE OF CONTENTS

1 Scope 3

2 MDC Connector 3

3 MDC Receptacle for OSFP or QSFP-DD Module Applications 4

4 MDC Receptacle for SFP-DD Module Applications 6

1 Scope

This specification provides optical interface dimensions and detail for OSFP, QSFP-DD and SFP-DD receptacles designed to accept an MDC optical connector.

2 MDC Connector

The MDC connector (Figure 2.1) is a very small form factor optical connector designed to provide (4) separate two-fiber connections into a OSFP or QSFP-DD module and (2) separate two-fiber connections into a SFP-DD module. A push-pull boot allows for simple insertion (and removal) of the MDC connectors to (and from) the receptacles. The MDC connector contains (2) 1.25 mm diameter ferrules and will be installed on 2.0 mm OD (or less) optical cables.

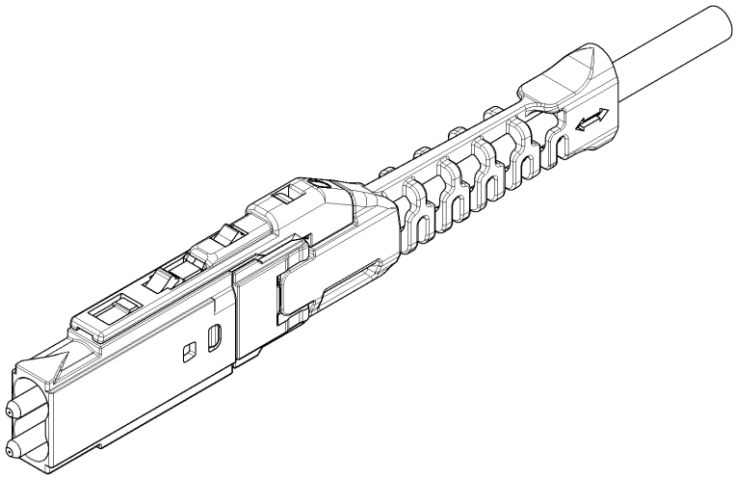

Figure 2.1: MDC Connector

3 MDC Receptacle for OSFP or QSFP-DD Module Applications

The MDC receptacle for OSFP or QSFP-DD module applications (Figure 3.1) will allow access for up to (4) MDC two-fiber optical connectors. Receptacle interface diagram and dimensions are provided in Figure 3.2 and Table 3.3 below.

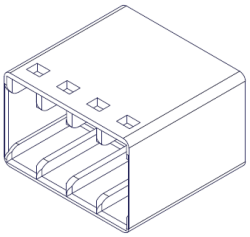

Figure 3.1: MDC Receptacle for OSFP or QSFP-DD Module Applications

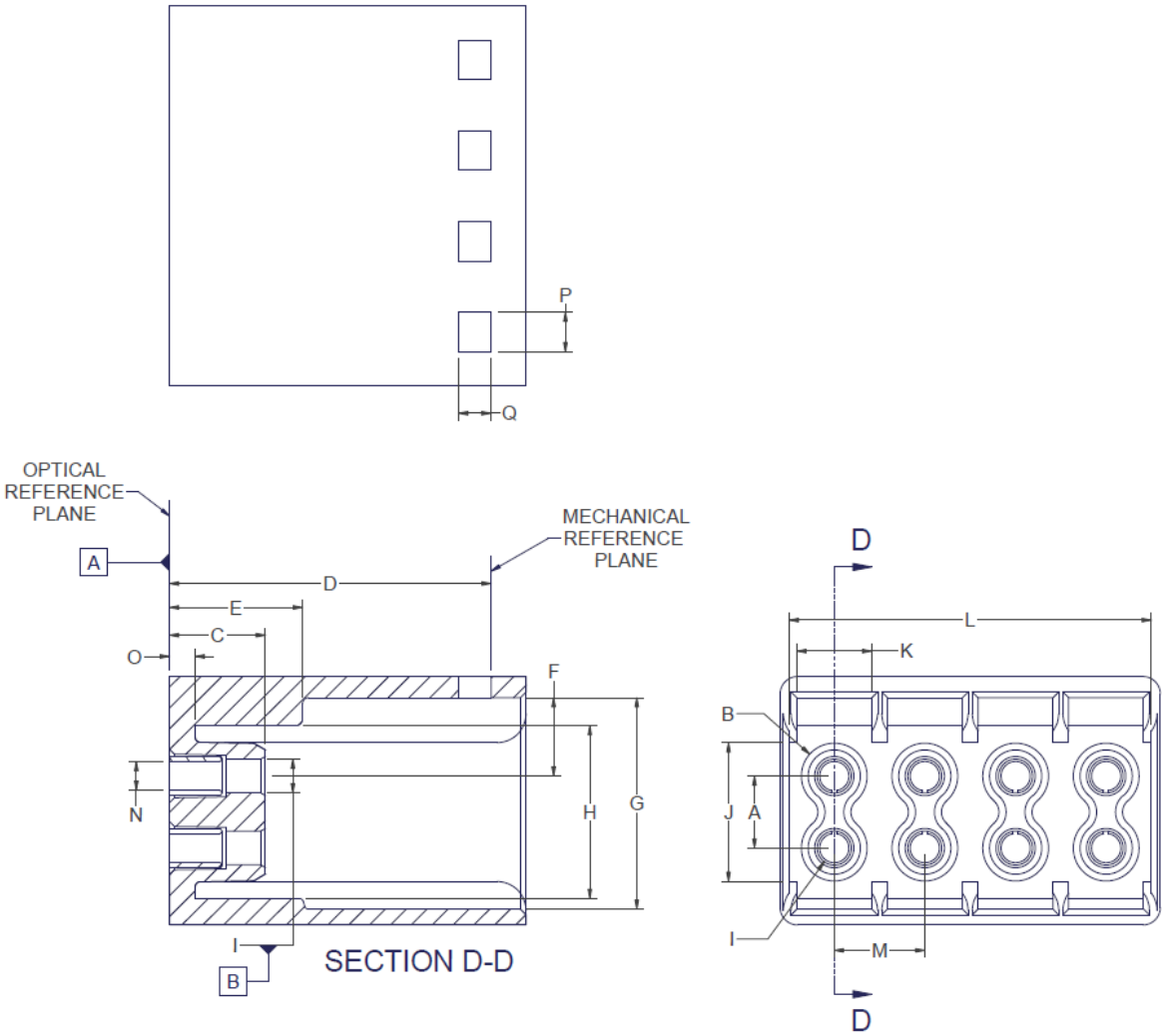

Figure 3.2 – MDC Receptacle Interface (OSFP or QSFP-DD)

DIM	Min. (mm)	Max. (mm)	Notes
A	3.05	3.15	1
B	2.87	2.97	diameter
C	4.00	4.10	
D	13.85	13.95	
E	-	5.90	
F	3.33	3.43	
G	9.05	9.15	
H	7.40	-	
I	1.40	1.50	diameter
J	5.93	6.03	
K	3.18	3.28	
L	15.65	15.85	
M	3.85	3.95	
N	-	-	2, diameter
O	1.10	1.20	
P	1.65	1.80	
Q	1.35	1.50	

Notes:

1. Ferrule pitch
2. Receptacle sleeve I.D.

Table 3.3: MDC Receptacle Interface Dimensions (OSFP or QSFP-DD)

4 MDC Receptacle for SFP-DD Module Applications

The MDC receptacle for SFP-DD module applications (Figure 4.1) will allow access for up to (2) MDC two-fiber optical connectors. Receptacle interface diagram and dimensions are provided in Figure 4.2 and Table 4.3 below.

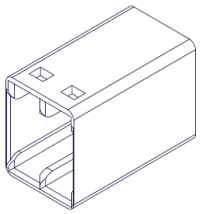

Figure 4.1: MDC Receptacle for SFP-DD Module Applications

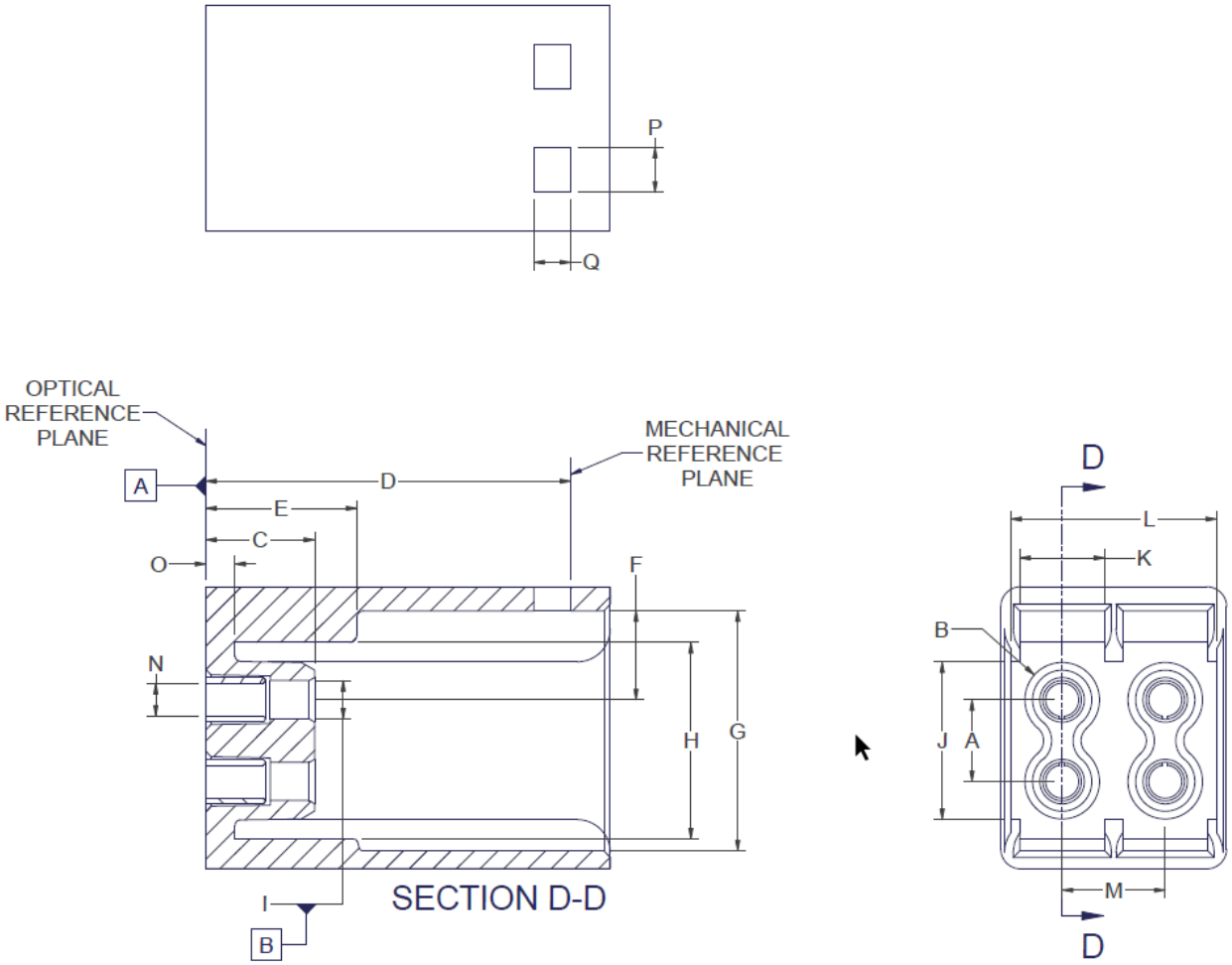

Figure 4.2 – MDC Receptacle Interface (SFP-DD)

DIM	Min. (mm)	Max. (mm)	Notes
A	3.05	3.15	1
B	2.87	2.97	diameter
C	4.00	4.10	
D	13.85	13.95	
E	-	5.90	
F	3.33	3.43	
G	9.05	9.15	
H	7.40	-	
I	1.40	1.50	diameter
J	5.93	6.03	
K	3.18	3.28	
L	7.77	7.97	
M	3.85	3.95	
N	-	-	2, diameter
O	1.10	1.20	
P	1.65	1.80	
Q	1.35	1.50	

Notes:

1. Ferrule pitch
2. Receptacle sleeve I.D.

Table 4.3: MDC Receptacle Interface Dimensions (SFP-DD)