US011415760B2

(12) **United States Patent**
Takano et al.

(10) **Patent No.: US 11,415,760 B2**
(45) **Date of Patent: *Aug. 16, 2022**

(54) **NARROW WIDTH ADAPTERS AND CONNECTORS WITH PULL TAB RELEASE**

(71) Applicant: **Senko Advanced Components Inc.**, Marlborough, MA (US)

(72) Inventors: **Kazuyoshi Takano**, Tokyo (JP); **Jeffrey Gniadek**, Oxford, ME (US)

(73) Assignee: **Senko Advanced Components, Inc.**, Hudson (MA)

(*) Notice: Subject to any disclaimer, the term of this patent is extended or adjusted under 35 U.S.C. 154(b) by 0 days.

This patent is subject to a terminal disclaimer.

(21) Appl. No.: **17/494,291**

(22) Filed: **Oct. 5, 2021**

(65) **Prior Publication Data**

US 2022/0029356 A1 Jan. 27, 2022

Related U.S. Application Data

(63) Continuation of application No. 16/695,901, filed on Nov. 26, 2019, now Pat. No. 11,152,748, which is a continuation of application No. 16/213,244, filed on Dec. 7, 2018, now Pat. No. 10,520,690, which is a continuation of application No. 15/044,838, filed on Feb. 16, 2016, now Pat. No. 10,158,194, which is a continuation-in-part of application No. 14/996,865, filed on Jan. 15, 2016, now Pat. No. 9,595,786.

(51) **Int. Cl.**
G02B 6/38 (2006.01)
H01R 13/633 (2006.01)

(52) **U.S. Cl.**
CPC ***G02B 6/3879*** (2013.01); *G02B 6/3893* (2013.01); *H01R 13/6335* (2013.01)

(58) **Field of Classification Search**
CPC .. G02B 6/3825; G02B 6/3879; G02B 6/3885; G02B 6/3893; H01R 13/627; H01R 13/6271; H01R 13/6272; H01R 13/6275; H01R 13/62933
USPC 385/76, 77, 88, 92; 439/133, 304, 345, 439/346, 350, 352, 353, 354, 357, 358, 439/370
See application file for complete search history.

(56) **References Cited**

U.S. PATENT DOCUMENTS

7,052,186 B1 * 5/2006 Bates G02B 6/3879 385/139
7,297,013 B2 * 11/2007 Caveney H01R 13/6272 439/352
8,556,645 B2 * 10/2013 Crain H01R 13/633 439/352
9,048,568 B2 * 6/2015 Chien H01R 13/633
9,063,303 B2 * 6/2015 Irwin G02B 6/3885
(Continued)

Primary Examiner — Robert Tavlykaev

(57) **ABSTRACT**

Narrow width fiber optic connectors having spring loaded remote release mechanisms to facilitate access and usage of the connectors in high density arrays. A narrow width fiber optic connector comprises a multi-fiber connector, wherein a width of said narrow width fiber optic connector is less than about 5.25 mm, a housing configured to hold the multi-fiber connector and further comprising a connector recess, and a pull tab having a ramp area configured to disengage a latch of one of an adapter and an SFP from said connector recess. The pull tab may include a spring configured to allow the latch of one of the adapter and the SFP to engage with the connector recess.

17 Claims, 19 Drawing Sheets

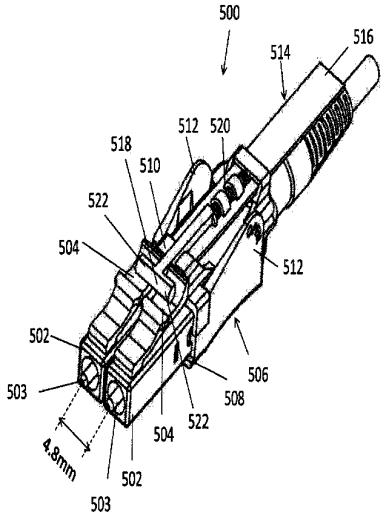

(56) **References Cited**

U.S. PATENT DOCUMENTS

2013/0022317	A1*	1/2013	Norris	G02B 6/3865 385/78
2017/0351037	A1*	12/2017	Watanabe	G02B 6/3885

* cited by examiner

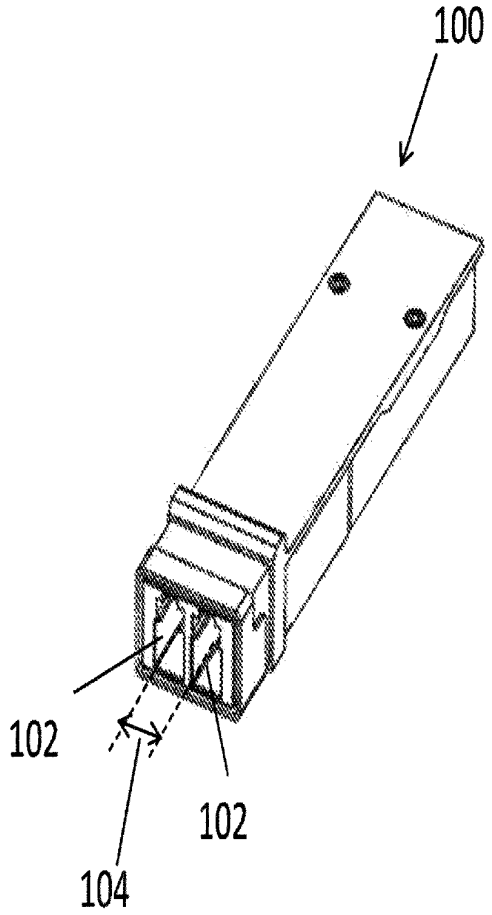

FIG. 1A
(Prior Art)

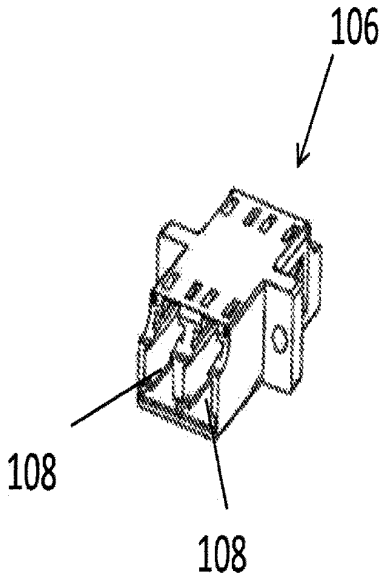

FIG. 1B
(Prior Art)

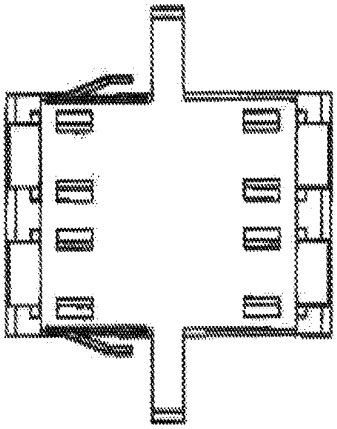

FIG. 1C
(Prior Art)

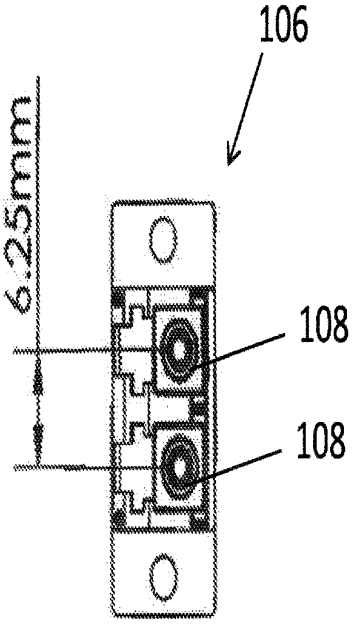

FIG. 1D
(Prior Art)

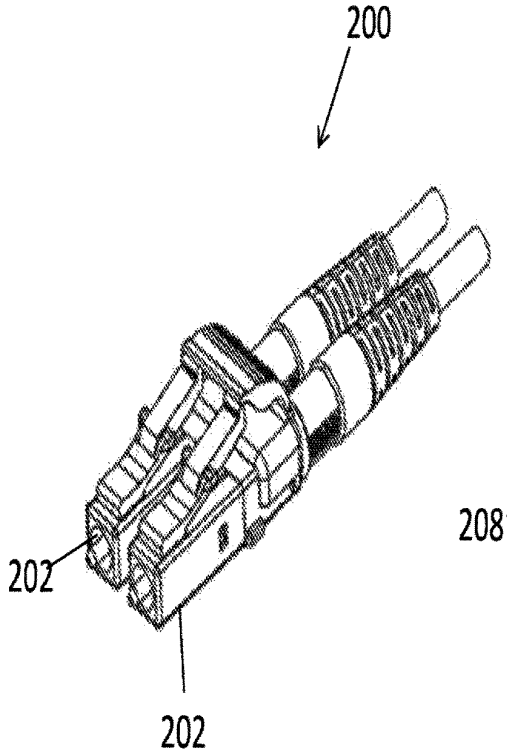

FIG. 2A
(Prior Art)

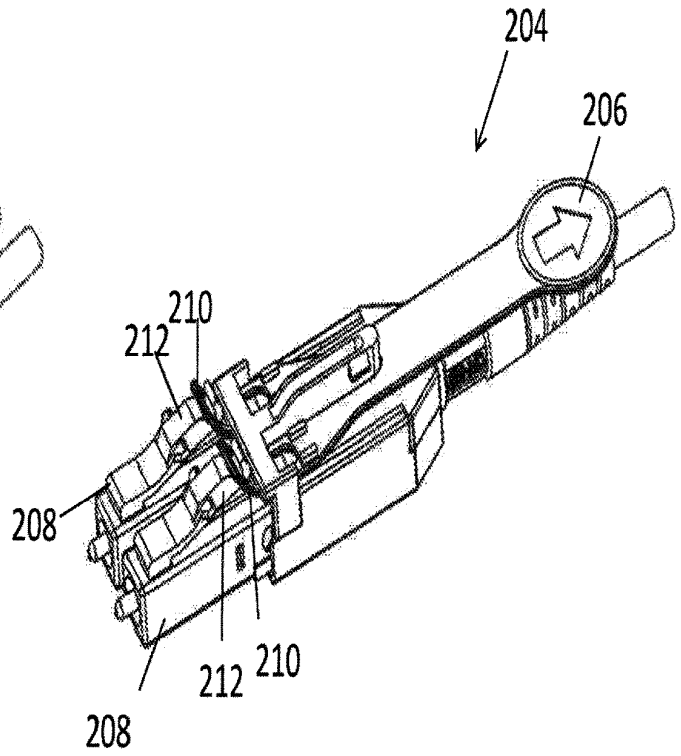

FIG. 2B
(Prior Art)

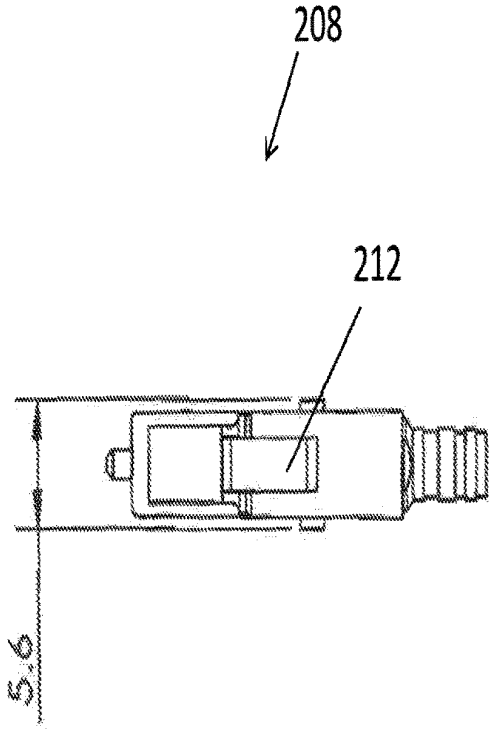

FIG. 2C
(Prior Art)

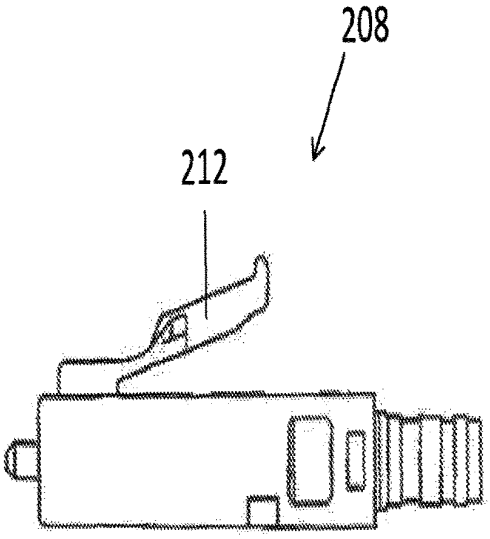

FIG. 2D
(Prior Art)

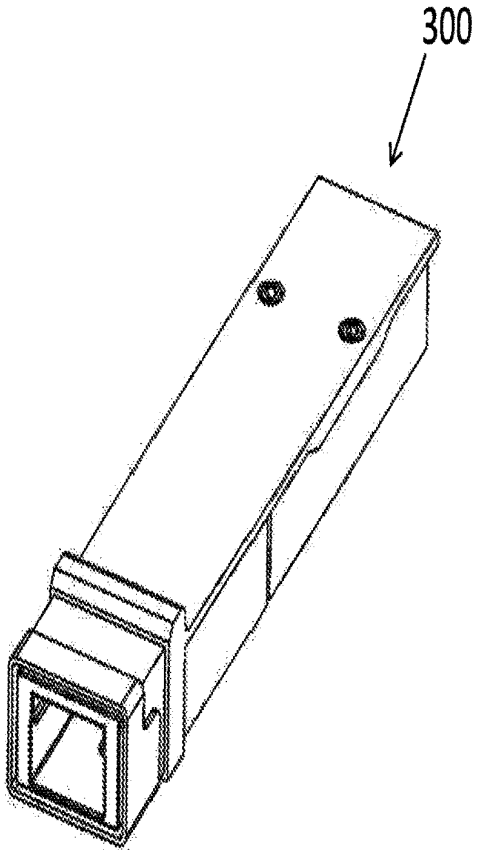

FIG. 3

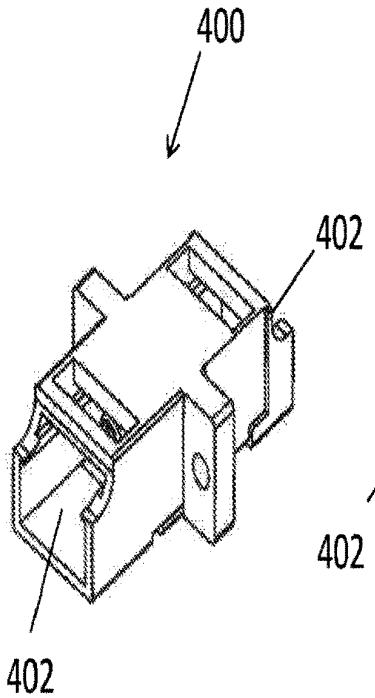

FIG. 4A

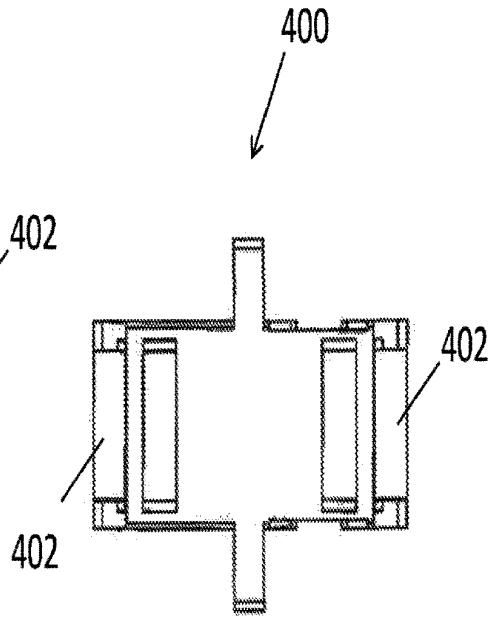

FIG. 4B

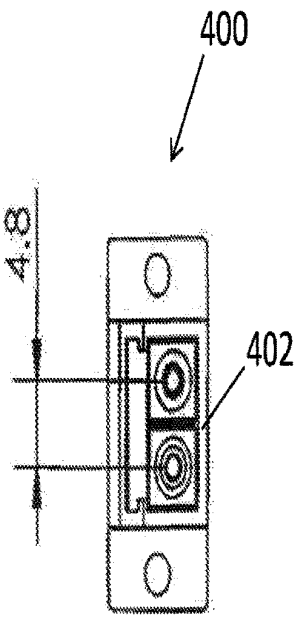

FIG. 4C

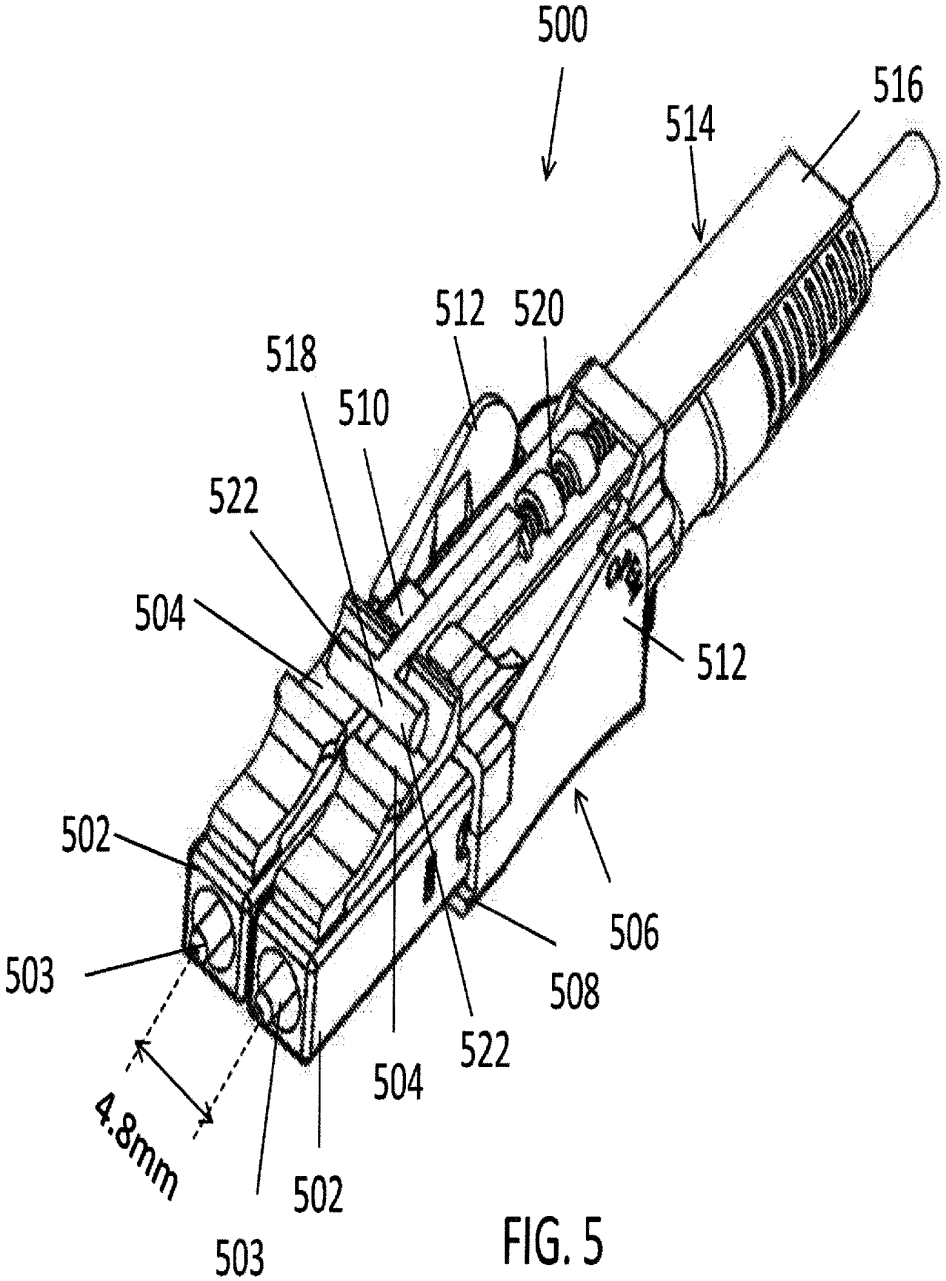
500
516
514
512
520
518
510
522
504
512
502
506
503
508
522
504
4.8mm
502
503

FIG. 5

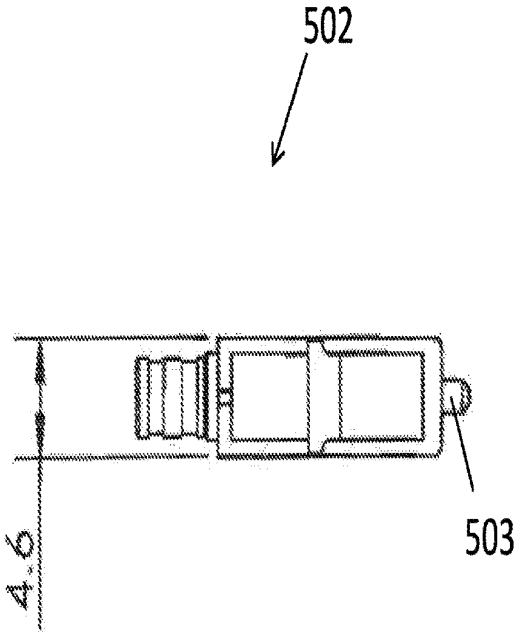

FIG. 6A

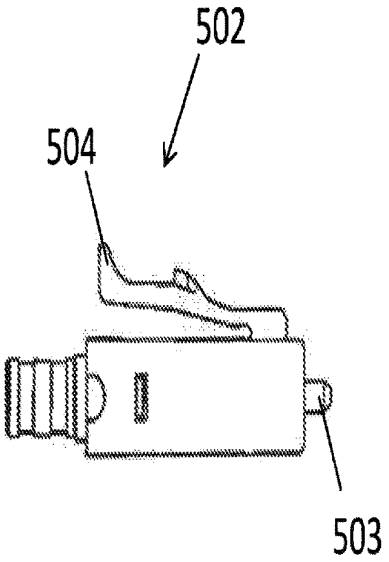

FIG. 6B

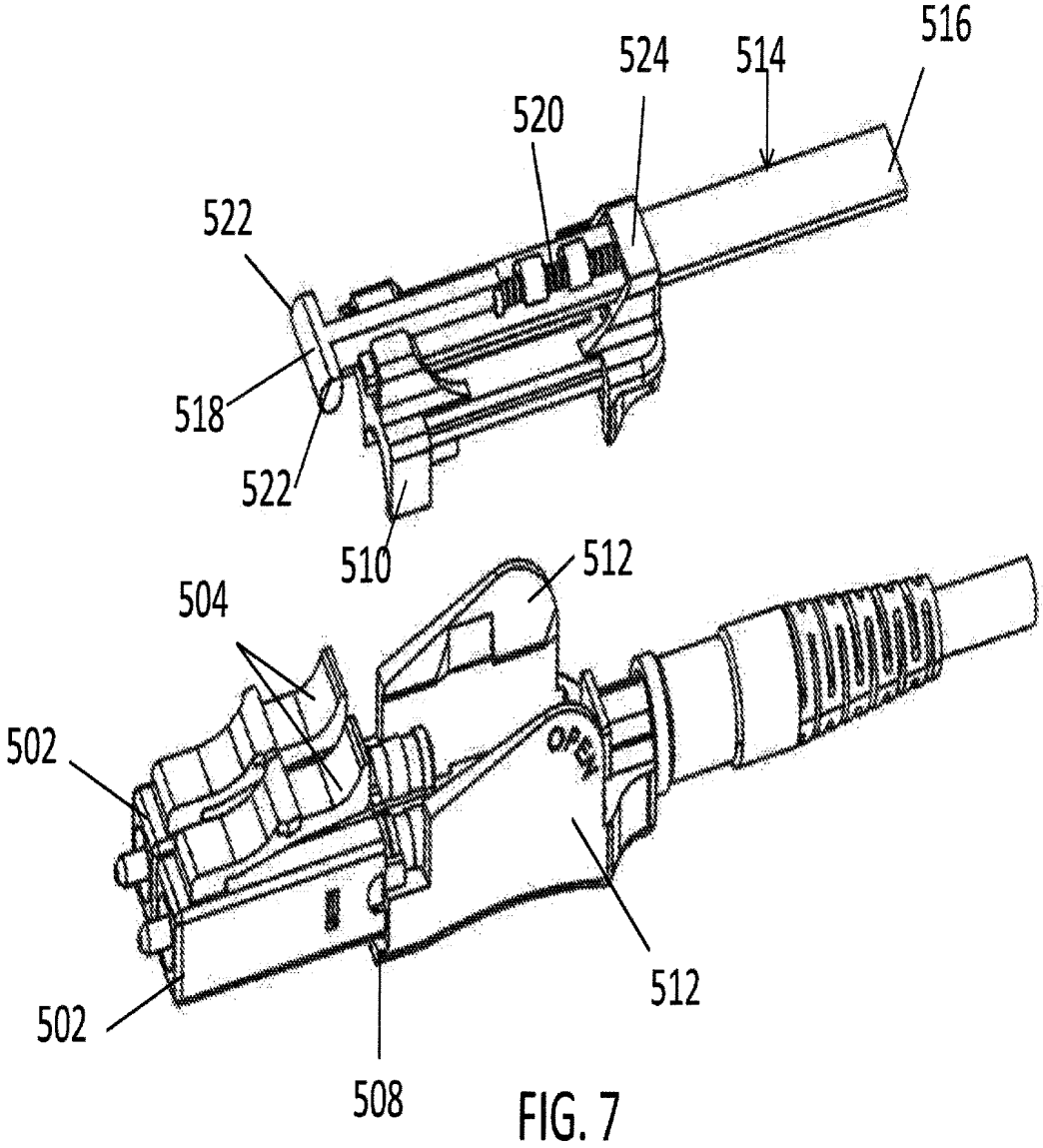

FIG. 7

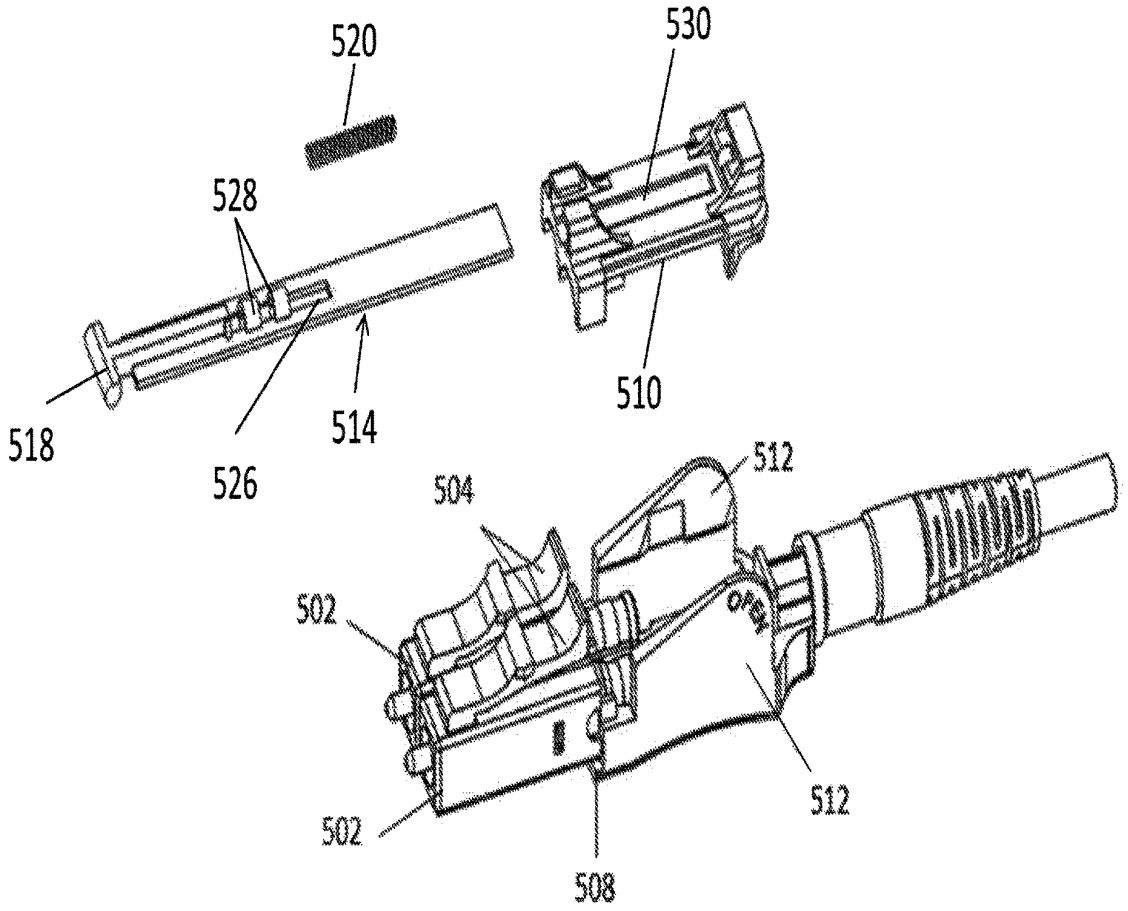

FIG. 8

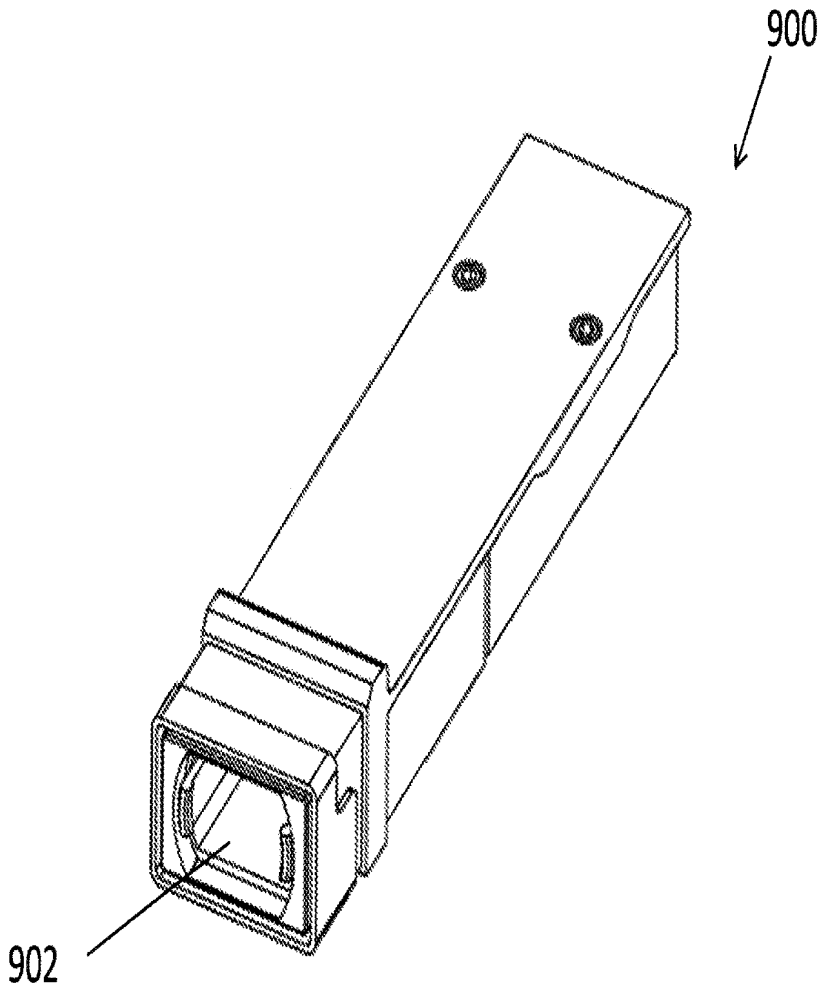

FIG. 9
(Prior Art)

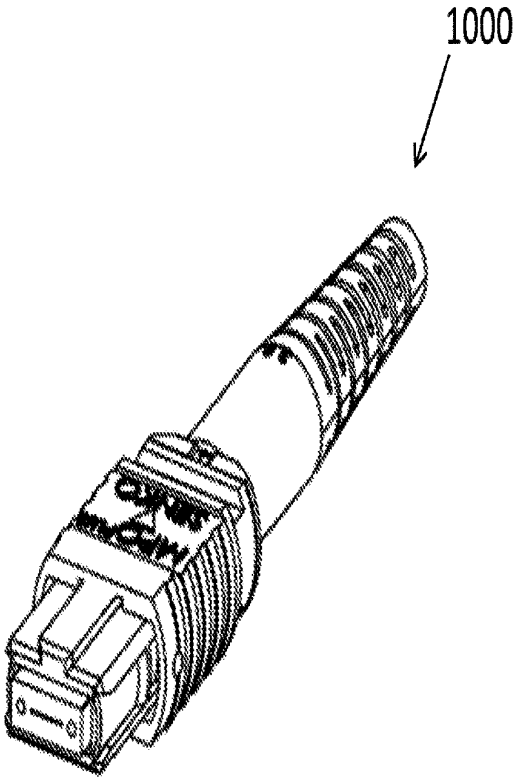

FIG. 10A
(Prior Art)

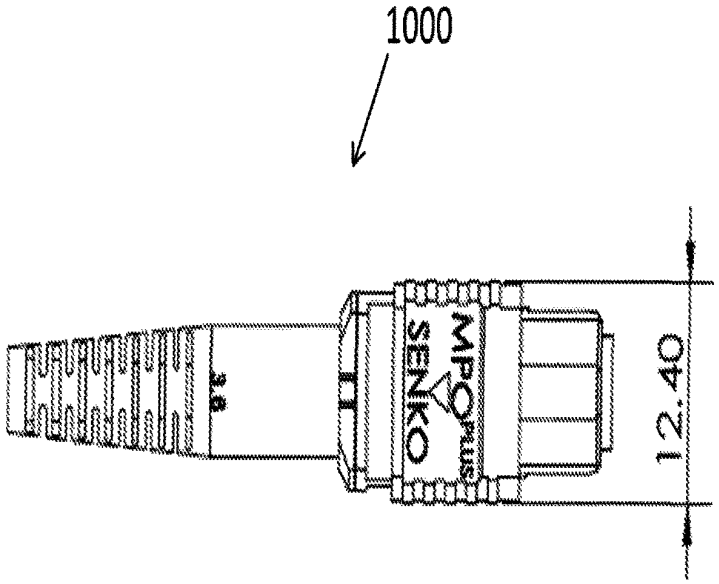

FIG. 10B
(Prior Art)

FIG. 10C
(Prior Art)

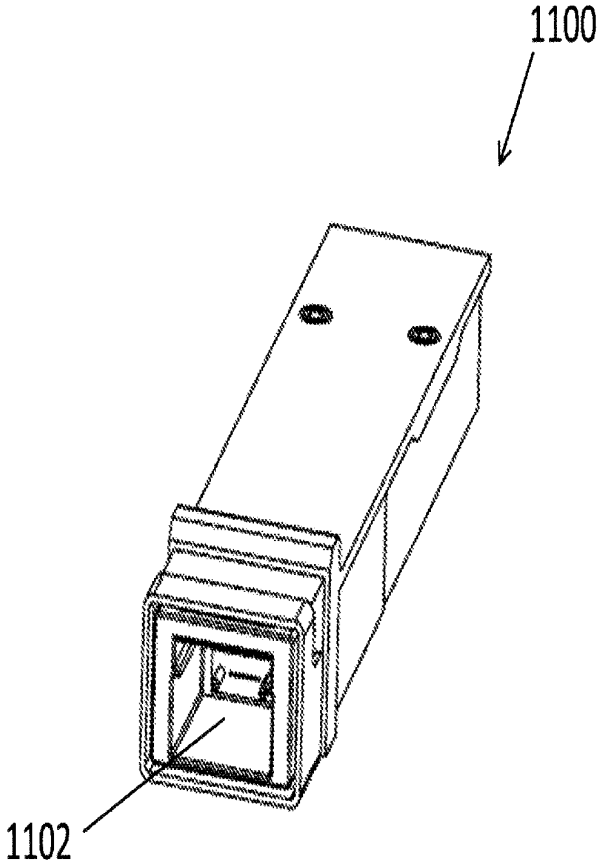

FIG. 11

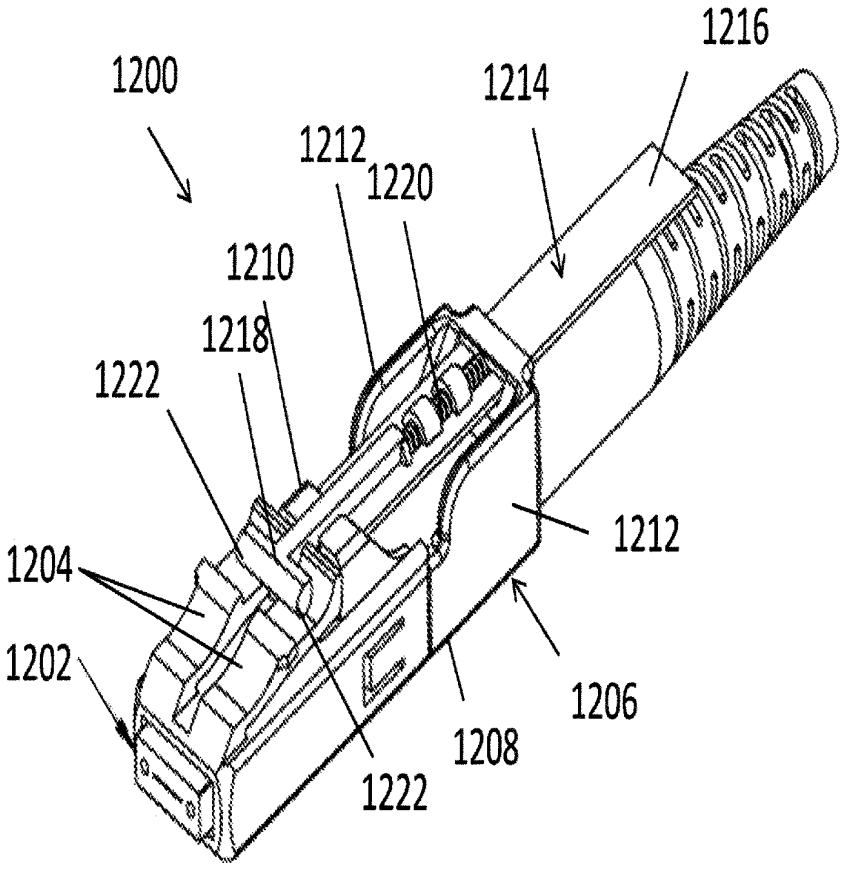
1200
1216
1214
1212
1220
1210
1218
1222
1212
1204
1202
1206
1208
1222

FIG. 12A

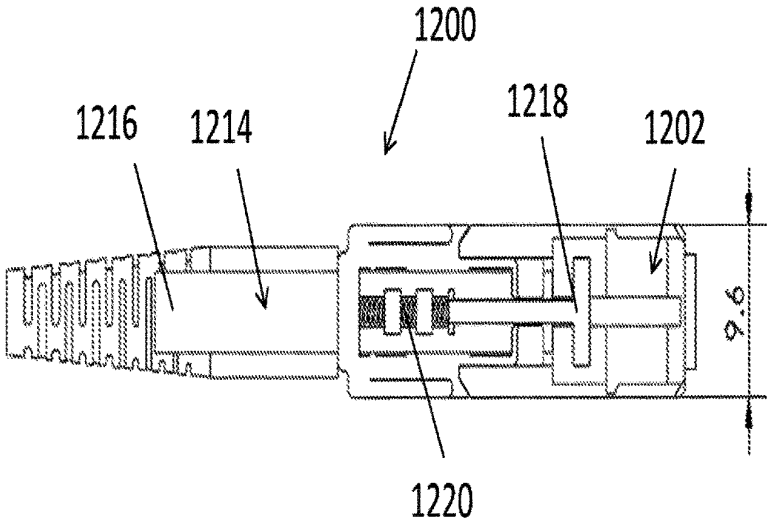

FIG. 12B

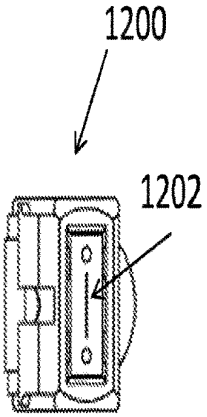

FIG. 12C

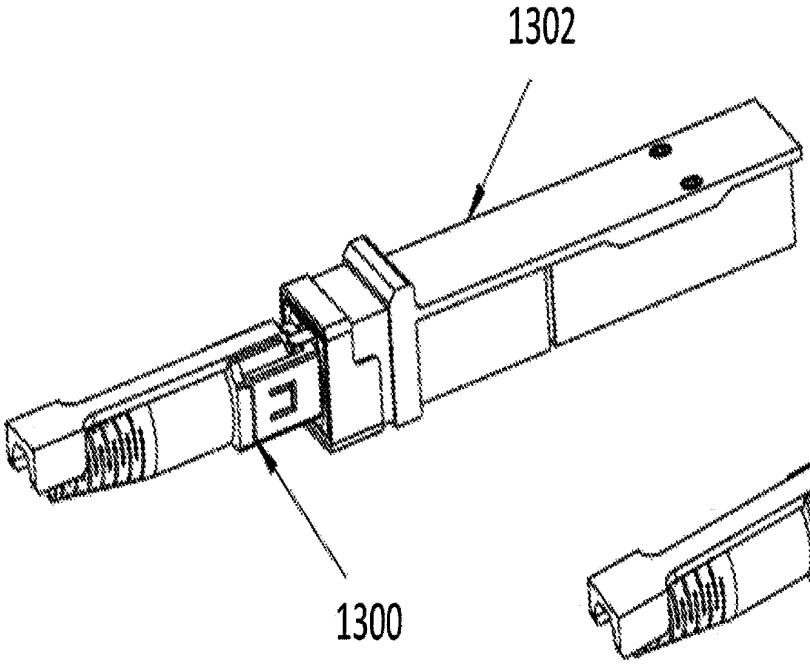

FIG. 13A

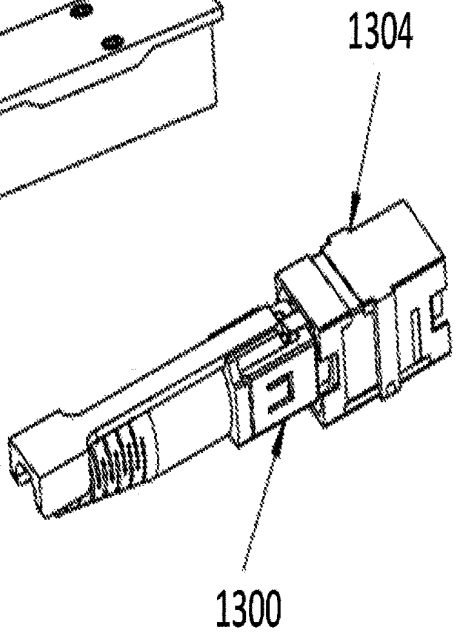

FIG. 13B

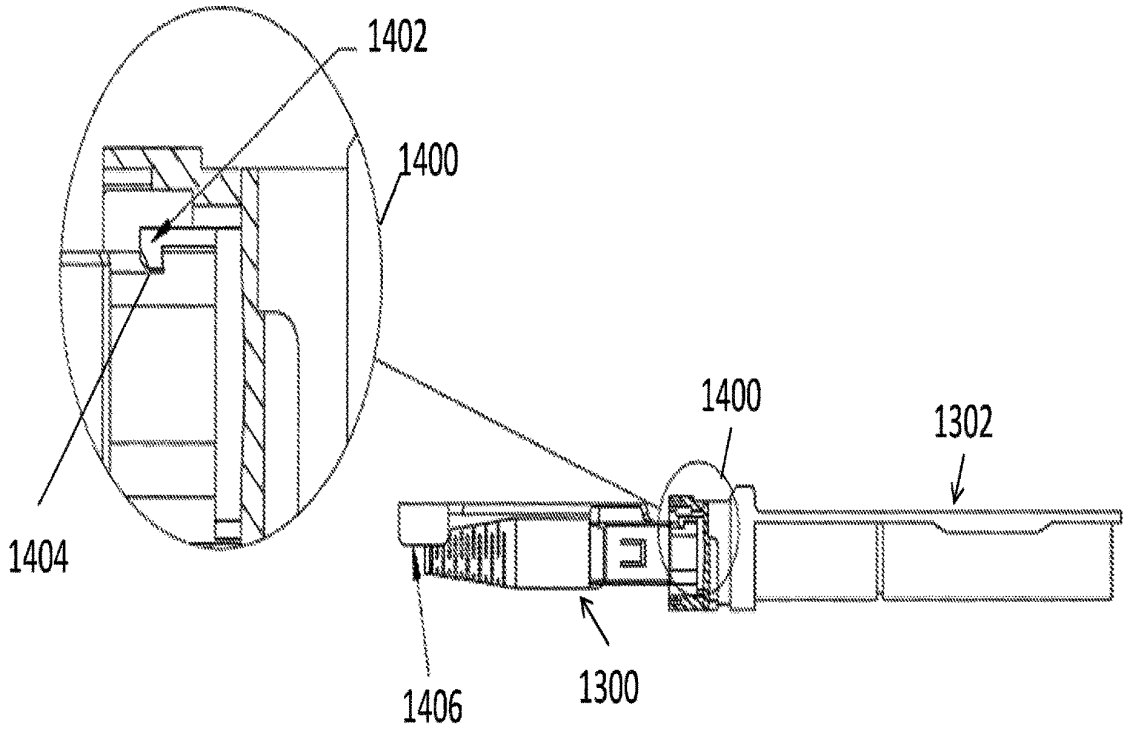

FIG. 14

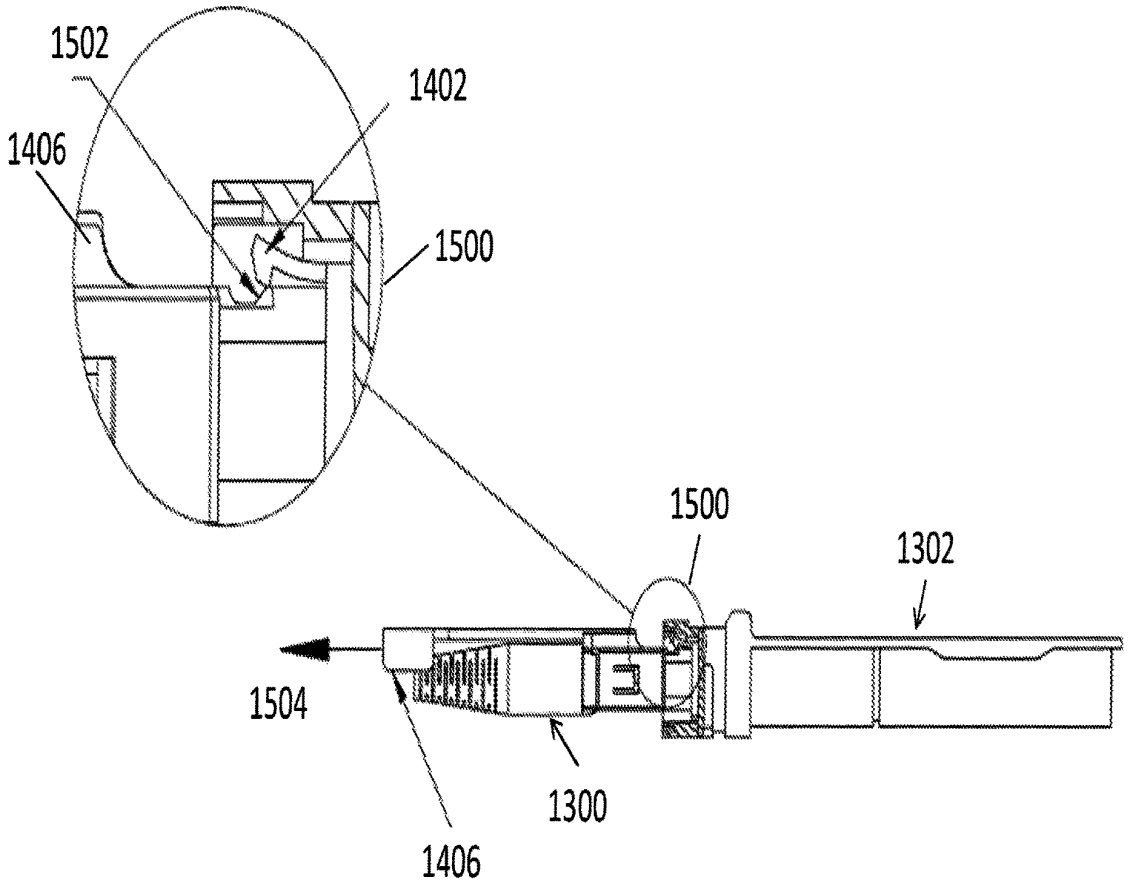

FIG. 15

NARROW WIDTH ADAPTERS AND CONNECTORS WITH PULL TAB RELEASE

CROSS-REFERENCE TO RELATED-APPLICATIONS

This application is a continuation of U.S. patent application Ser. No. 16/695,901 filed Nov. 26, 2019 which is a continuation of U.S. patent application Ser. No. 16/213,244 filed Dec. 7, 2018, which is a continuation of U.S. patent application Ser. No. 15/044,838 filed Feb. 16, 2016, now U.S. Pat. No. 10,158,194 granted on Dec. 18, 2018, which is a continuation-in-part of U.S. patent application Ser. No. 14/996,865 filed on Jan. 15, 2016, now U.S. Pat. No. 9,595,786 granted on Mar. 14, 2017, and application Ser. No. 15/044,838 claim priority to International Application No. PCT/US16/13629 filed on Jan. 15, 2016 and Taiwan Patent Application No. 105101374 filed on Jan. 18, 2016, each of which are incorporated herein by reference in their entirety.

BACKGROUND

The present disclosure relates generally to connectors having remote release, and more specifically to narrow width adapters and connectors, such as narrow pitch distance LC duplex adapters and connectors with spring loaded remote release, and narrow width multi-fiber connectors.

The prevalence of the Internet has led to unprecedented growth in communication networks. Consumer demand for service and increased competition has caused network providers to continuously find ways to improve quality of service while reducing cost.

Certain solutions have included deployment of high-density interconnect panels. High-density interconnect panels may be designed to consolidate the increasing volume of interconnections necessary to support the fast-growing networks into a compacted form factor, thereby increasing quality of service and decreasing costs such as floor space and support overhead. However, the deployment of high-density interconnect panels have not been fully realized.

In communication networks, such as data centers and switching networks, numerous interconnections between mating connectors may be compacted into high-density panels. Panel and connector producers may optimize for such high densities by shrinking the connector size and/or the spacing between adjacent connectors on the panel. While both approaches may be effective to increase the panel connector density, shrinking the connector size and/or spacing may also increase the support cost and diminish the quality of service.

In a high-density panel configuration, adjacent connectors and cable assemblies may obstruct access to the individual release mechanisms. Such physical obstructions may impede the ability of an operator to minimize the stresses applied to the cables and the connectors. For example, these stresses may be applied when the user reaches into a dense group of connectors and pushes aside surrounding optical fibers and connectors to access an individual connector release mechanism with his/her thumb and forefinger. Overstressing the cables and connectors may produce latent defects, compromise the integrity and/or reliability of the terminations, and potentially cause serious disruptions to network performance.

While an operator may attempt to use a tool, such as a screwdriver, to reach into the dense group of connectors and activate the release mechanism, the adjacent cables and

connectors may obstruct the operator's line of sight, making it difficult to guide the tool to the release mechanism without pushing aside the surrounding cables. Moreover, even when the operator has a clear line of sight, guiding the tool to the release mechanism may be a time-consuming process. Thus, using a tool may not be effective at reducing support time and increasing the quality of service.

Small Form Factor Pluggable Transceivers (SFP) are used presently in telecommunication infrastructures within rack mounted copper-to-fiber media converters, and are also known as Ethernet switches and/or patching hubs. These infrastructure Ethernet and fiber optic connections are evolving daily to increase connection density due to limited space for such equipment. Although fiber optic connectors have become smaller over the years, they have not been designed to be any smaller than necessary to plug into commonly sized and readily available SFPs. However, as transceiver technologies develop, smaller SFPs will be used to create higher density switches and/or patching hub equipment. Accordingly, there is a need for fiber optic connectors that will meet the needs of future developments in smaller SFPs.

SUMMARY

Aspects of the present disclosure are directed to providing adapters and fiber optic connectors for future developments in smaller SFPs, including for example narrow pitch SFPs for LC type duplex connectors, as well as narrow width SFPs for MPO connectors. Aspects of the present disclosure also provide spring loaded remote release mechanisms to facilitate access and usage of the narrow pitch connectors in high density arrays or panels.

According to one aspect, there is provided a narrow width fiber optic connector comprising a multi-fiber connector, wherein a width of said narrow width fiber optic connector is less than about 12.4 mm, a housing configured to hold the multi-fiber connector and further comprising a connector recess, and a pull tab having a ramp area configured to disengage a latch of one of an adapter and an SFP from said connector recess. The multi-fiber connector may include a multi-fiber MT ferrule. In some embodiments, the width of said narrow width fiber optic connector may be less than or equal to about 9.6 mm. The pull tab may include a spring configured to allow the latch of one of the adapter and the SFP to engage with the connector recess.

According to another aspect, there is provided a narrow pitch fiber optic connector comprising a plurality of LC connectors arranged such that a pitch of said narrow pitch connector is less than about 5.25 mm, a housing configured to hold the plurality of LC connectors and further comprising a connector recess, and a pull tab having a ramp area configured to disengage a latch of one of an adapter and an SFP from said connector recess. In some embodiments, the pitch may be less than or equal to about 4.8 mm. The pull tab may include a spring configured to allow the latch of one of the adapter and the SFP to engage with the connector recess. In some embodiments, the pull tab may include a distal end for remotely unlatching the narrow pitch connector. The narrow pitch connector may be a duplex connector. In some embodiments, the housing may include a bottom housing and a top housing coupled to the bottom housing. The bottom housing may include a side wall configured to open. The side wall may include a raised profile at a rear end thereof.

According to another aspect, there is provided a narrow pitch fiber optic connector comprising a plurality of LC connectors arranged such that a pitch of said narrow pitch

connector is less than about 5.25 mm, a plurality of latching arms coupled to the plurality of LC connectors, a housing configured to hold the plurality of LC connectors, and a pull tab coupled to the plurality of latching arms and configured to remotely unlatch the narrow pitch connector. In some embodiments, the pitch may be less than or equal to about 4.8 mm.

In some embodiments, the pull tab may include a spring configured to provide a force such that the latching arms return to an undisplaced position. The pull tab may include a distal end for remotely unlatching the narrow pitch connector and a proximal end configured to couple the pull tab to the plurality of latching arms. The proximal end may include a single prong configured to engage the plurality of latching arms. The proximal end may include a plurality of pins configured to slide along a semi-circular profile of the plurality of latching arms. In various embodiments, the narrow pitch connector is a duplex connector.

In various embodiments, the housing may include a bottom housing and a top housing coupled to the bottom housing. The bottom housing may include a side wall configured to open. The side wall may include a raised profile at a rear end thereof. The top housing may be configured to retain the pull tab. The pull tab may be further configured to be pushed down so as to unlatch the narrow pitch connector without resulting in any horizontal movement of the pull tab.

According to another aspect, there is disclosed a duplex fiber optic connector comprising two LC connectors arranged such that a pitch of said duplex LC connector is less than about 5.25 mm, and a pull tab coupled to said two LC connectors so as to remotely unlatch said duplex connector when pulled horizontally, wherein the pull tab is spring loaded. In one embodiment, the pitch may be less than or equal to about 4.8 mm.

In some embodiments, the pull tab may include a proximal end configured to couple to respective latching arms of the two LC connectors. The duplex fiber optic connector may further comprise a housing having side walls configured to open. The housing may further comprise a top housing configured to receive the pull tab. The pull tab may be further configured to be pushed down so as to unlatch the duplex connector without resulting in any horizontal movement of the pull tab.

According to another aspect, there is disclosed a narrow pitch adapter comprising a recess configured to receive a duplex fiber optic connector having a pitch less than about 5.25 mm. In some embodiments, the pitch may be less than or equal to about 4.8 mm.

According to another aspect, there is disclosed a narrow width fiber optic connector comprising a multi-fiber connector, wherein a width of said narrow width fiber optic connector is less than about 12.4 mm, at least one latching arm coupled to the multi-fiber connector, a housing configured to hold the multi-fiber connector, and a pull tab coupled to the at least one latching arms and configured to remotely unlatch the narrow width connector. The multi-fiber connector may include a multi-fiber MT ferrule. In some embodiments, the width may be less than or equal to about 9.6 mm. In some embodiments, the pull tab may include a spring configured to provide a force such that the at least one latching arm returns to an undisplaced position.

BRIEF DESCRIPTION OF THE DRAWINGS

FIG. **1**A is a perspective view of a prior art standard 6.25 mm pitch LC connector SFP;

FIG. **1**B is a perspective view of a prior art standard 6.25 mm pitch LC adapter;

FIG. **1**C is a top view of the prior art adapter of FIG. **1**B;

FIG. **1**D is a front view of the prior art adapter of FIG. **1**B, showing the 6.25 mm pitch;

FIG. **2**A is a perspective view of a prior art LC duplex connector;

FIG. **2**B is a perspective view of a prior art LC duplex connector with a remote release pull tab;

FIG. **2**C is a top view of a prior art LC connector used in the embodiments shown in FIGS. **2**A and **2**B;

FIG. **2**D is a side view of the prior art LC connector of FIG. **2**C;

FIG. **3** is a perspective view of a future narrow pitch LC SFP for receiving connectors disclosed herein according to aspects of the present disclosure;

FIG. **4**A is a perspective view of one embodiment of a narrow pitch LC adapter according to aspects of the present disclosure;

FIG. **4**B is a top view of the narrow pitch LC adapter of FIG. **4**A;

FIG. **4**C is a front view of the narrow pitch LC adapter of FIG. **4**A, showing a 4.8 mm pitch;

FIG. **5** is a perspective view of one embodiment of a narrow pitch LC duplex connector with remote release according to aspects of the present disclosure;

FIG. **6**A is a top view of an LC connector used in the embodiment of FIG. **5** according to aspects of the present disclosure;

FIG. **6**B is a side view of the LC connector of FIG. **6**A according to aspects of the present disclosure;

FIG. **7** is a perspective view of narrow pitch LC duplex connector of FIG. **5**, with the release mechanism being removed according to aspects of the present disclosure;

FIG. **8** is a perspective disassembled view of the narrow pitch LC duplex connector of FIG. **5** according to aspects of the present disclosure;

FIG. **9** is a perspective view of a prior art standard MPO SFP;

FIG. **10**A is a perspective view of a prior art standard MPO connector;

FIG. **10**B is a top view of the prior art MPO connector of FIG. **10**A, having a width of 12.4 mm;

FIG. **10**C is a front view of the prior art MPO connector of FIG. **10**A;

FIG. **11** is a perspective view of a future narrow width multi-fiber SFP for receiving connectors disclosed herein according to aspects of the present disclosure;

FIG. **12**A is a perspective view of one embodiment of a narrow width multi-fiber connector with remote release according to aspects of the present disclosure;

FIG. **12**B is a top view of the narrow width multi-fiber connector of FIG. **12**A, having a width of 9.6 mm according to aspects of the present disclosure;

FIG. **12**C is a front view of the narrow width multi-fiber connector of FIG. **12**A according to aspects of the present disclosure;

FIG. **13**A is a perspective view of a narrow width multi-fiber connector inserted into a narrow width SFP having an SFP latch according to aspects of the present disclosure;

FIG. **13**B is a perspective view of a narrow width multi-fiber connector inserted into a narrow width adapter having an adapter latch according to aspects of the present disclosure;

FIG. **14** is a side view of a narrow width multi-fiber connector of FIG. **13**A having a recess engaged with an SFP latch in a normal pull tab position according to aspects of the present disclosure; and

FIG. **15** is a side view of the narrow width multi-fiber connector of FIG. **13**A, being disengaged from the SFP latch by retracting the pull tab according to aspects of the present disclosure.

DETAILED DESCRIPTION

This disclosure is not limited to the particular systems, devices and methods described, as these may vary. The terminology used in the description is for the purpose of describing the particular versions or embodiments only, and is not intended to limit the scope.

As used in this document, the singular forms "a," "an," and "the" include plural references unless the context clearly dictates otherwise. Unless defined otherwise, all technical and scientific terms used herein have the same meanings as commonly understood by one of ordinary skill in the art. Nothing in this disclosure is to be construed as an admission that the embodiments described in this disclosure are not entitled to antedate such disclosure by virtue of prior invention. As used in this document, the term "comprising" means "including, but not limited to."

The following terms shall have, for the purposes of this application, the respective meanings set forth below.

A connector, as used herein, refers to a device and/or components thereof that connects a first module or cable to a second module or cable. The connector may be configured for fiber optic transmission or electrical signal transmission. The connector may be any suitable type now known or later developed, such as, for example, a ferrule connector (FC), a fiber distributed data interface (FDDI) connector, an LC connector, a mechanical transfer (MT) connector, an SC connector, an SC duplex connector, or a straight tip (ST) connector. The connector may generally be defined by a connector housing body. In some embodiments, the housing body may incorporate any or all of the components described herein.

A "fiber optic cable" or an "optical cable" refers to a cable containing one or more optical fibers for conducting optical signals in beams of light. The optical fibers can be constructed from any suitable transparent material, including glass, fiberglass, and plastic. The cable can include a jacket or sheathing material surrounding the optical fibers. In addition, the cable can be connected to a connector on one end or on both ends of the cable.

Various embodiments described herein generally provide a remote release mechanism such that a user can remove cable assembly connectors that are closely spaced together on a high density panel without damaging surrounding connectors, accidentally disconnecting surrounding connectors, disrupting transmissions through surrounding connectors, and/or the like. Various embodiments also provide narrow pitch LC duplex connectors and narrow width multi-fiber connectors, for use, for example, with future narrow pitch LC SFPs and future narrow width SFPs. The remote release mechanisms allow use of the narrow pitch LC duplex connectors and narrow width multi-fiber connectors in dense arrays of narrow pitch LC SFPs and narrow width multi-fiber SFPs.

FIG. **1**A shows a perspective view of a prior art standard 6.25 mm pitch LC connector SFP **100**. The SFP **100** is configured to receive a duplex connector, and provides two receptacles **102**, each for receiving a respective LC connector. The pitch **104** is defined as the axis-to-axis distance between the central longitudinal axes of each of the two receptacles **102**. FIG. **1**B shows a perspective view of a prior art standard 6.25 mm pitch LC adapter **106**. The adapter **106** is also configured to receive a duplex connector, and provides two receptacles **108**, each for receiving a respective LC connector. FIG. **1**C is a top view of the adapter **106** of FIG. **1**B. The pitch **110** of the adapter **106** is defined similarly to that of the SFP **100**, as the axis-to-axis distance between the central longitudinal axes of each of the two receptacles **108**, as illustrated in FIG. **1**D, which shows a front view of the adapter **106**.

FIG. **2**A shows a prior art LC duplex connector **200** that may be used with the conventional SFP **100** and the conventional adapter **106**. The LC duplex connector **200** includes two conventional LC connectors **202**. FIG. **2**B shows another prior art LC duplex connector **204** having a remote release pull tab **206**, and including two conventional LC connectors **208**. As shown, the remote release pull tab includes two prongs **210**, each configured to couple to the extending member **212** of a respective LC connector **208**. FIGS. **2**C and **2**D show top and side views, respectively, of the conventional LC connector **208**, having a width of 5.6 mm, and further showing the extending member **212**.

Various embodiments disclosed herein are configured for use with a future SFP, such as the narrow pitch LC SFP **300** shown in FIG. **3**, having a pitch less than that of conventional 6.25 mm and 5.25 mm pitches. Various embodiments utilize LC type fiber optic connectors in duplex arrangements (having transmitting and receiving fibers) but with a connector axis-to-axis distance that is less than the conventional 6.25 mm and 5.25 mm pitches, as described further below.

According to another aspect, there is disclosed embodiments of narrow pitch duplex LC adapters. FIGS. **4**A to **4**C show one embodiment of a narrow pitch adapter **400**. The narrow pitch adapter **400** has receptacles **402** on opposite ends thereof, configured for mating two narrow pitch LC duplex connectors according to aspects disclosed herein. FIG. **4**B shows a top view of the adapter **400**. FIG. **4**C shows a front view, further illustrating that the adapter **400** has a pitch of 4.8 mm. The adapter **400** is configured to receive a duplex LC connector, with a pitch of the adapter corresponding to the axis-to-axis distance between the LC connectors of the LC duplex connector. Although the adapter **400** has a pitch of 4.8 mm, various embodiments of narrow pitch adapters disclosed herein may have a different pitch that is less than that of the pitch of conventional adapters, for example less than 6.25 mm and less than about 5.25 mm. In some embodiments, the pitch may be about 4.8 mm or less.

In addition to the need for narrow connectors, there is a need for remote unlatching of the narrow connectors used in dense narrow SFP arrays. This is because finger access to connectors is nearly impossible without disruption to the service of adjacent optical fibers. Although there are current designs of remotely unlatching fiber optic connectors, as shown for example in FIG. **2**B, they have proven to be difficult to function as desired when plugged into the die cast construction that is typical of all SFP's. The die cast SFP is not one that is ever free of sharp edges and internal flashing (burrs) that can interfere with the normal flexing motion of the plastic latches of the fiber optic connectors. The interference between metal edges and burrs may prevent the fiber optic connector's plastic latch from either becoming fully engaged or easily disengaged, especially with latches that

are remotely triggered by pull tabs that project a distance behind the connector so as to keep fingers from disturbing adjacent optical fibers.

To make the latching/unlatching of the connectors from the SFP more reliable, various embodiments disclosed herein add a spring force to the remote latching component (pull tab), for example as shown and described in relation to FIGS. **5**, **7**, **8** and **12** below, to ensure that the connector latches are allowed to return to the undisplaced position and thereby become fully engaged inside the SFP's recess.

FIG. **5** shows one embodiment of a narrow pitch connector **500** according to aspects disclosed herein. The narrow pitch connector **500** is a duplex LC connector including two LC connectors **502**. Each of the LC connectors **502** includes a respective ferrule **503** and a respective extending member or latching arm **504**. The connector **500** has a pitch of 4.8 mm, defined as the axis-to-axis distance between the central axes of the LC connectors **502**. In other embodiments, the connector pitch may be less than that of the pitch of conventional connectors, for example less than 6.25 mm and less than about 5.25 mm. In some embodiments, the pitch may be about 4.8 mm or less.

The connector **500** further includes a housing **506** having a bottom housing **508** and a top housing **510**. The bottom housing **508** includes side walls **512**. In various embodiments, the housing of the connector may be a switchable housing. The side walls may be configured to open so as to facilitate opening of the housing, for example to change polarity of the connector. The side walls **512** may be raised towards the rear of the connector, as shown in FIG. **5**. One advantage of raising the side walls towards the rear of the connector is easier access. In other embodiments, the side walls may be raised at another location.

The connector **500** further includes a pull tab **514** having a distal end **516** and a proximal end **518**. The pull tab **514** further includes a spring **520** configured to provide a force such that the connector latching arms **504** return to the undisplaced position and thereby become fully engaged inside the SFP's recess. The distal end **516** of the pull tab **514** may be pulled to remotely release the connector **500** from an SFP or adapter. The proximal end **518** of the pull tab **514** is uniquely shaped so as to engage with the unique profile of the latching arms **504** of the narrow pitch LC connector **500**. The proximal end **518** engages both latching arms **504** of the duplex LC connector **500**. That is, the proximal end **518** includes a single prong configured to engage the latching arms of both connectors **502**. At the proximal end **518** of the pull tab **514** there are outwardly pointing pins **522** configured to rest directly above and slide along the semi-circular surface of latching arms **504** of the duplex LC connectors **502**. The horizontal and rearward path direction of the pins **522** causes the semi-circular profile of the connector latching arms **504** to flex downward. Because the pins **522** are not contained inside ramped grooves of the connector latching arms **504**, the pull tab **514** can also be pushed down at a location directly behind the LC connectors **502** rather than pulling the tab in a rearward motion from a remote distance behind the connectors, such as from the distal end **516**. The action of pushing down the connectors' integral levers or latching arms **504** unlatches the connector **500**. In some cases, the horizontal motion of the pull tab **514** may not be desirable. Thus, the connector latching arms **504** may be pushed down without resulting in a horizontal motion of the pull tab **514**.

FIGS. **6**A and **6**B show top and side views, respectively, of the LC connector **502** of the narrow pitch connector **500**. FIG. **6**A further shows that the LC connector **502** has a width of 4.6 mm. FIG. **6**B shows the semi-circular profile of the latching arm **504**.

FIG. **7** shows a partially disassembled view of the narrow pitch connector **500** of FIG. **5**. The top housing **510** is separated from the bottom housing **508**. The pull tab **514** is coupled to the top housing **510** and configured to slide longitudinally along the length of the connector. The top housing **510** also includes a restraint **524** configured to receive the pull tab **514**.

FIG. **8** shows a further disassembled view of the narrow pitch connector **500**. Specifically, the pull tab **514** is shown to be separated from the top housing **510**, and the spring **520** is removed from the pull tab. The pull tab **514** includes a longitudinal recess **526** configured to receive the spring **520**, and at least one restraint **528** configured to retain the spring. The top housing **510** also includes a recess **530** configured to accommodate at least a portion of the pull tab **514**, such as the spring **520** and the proximal end **518**. In various embodiments, the pull tab may be removably coupled to the connector via the top housing.

FIG. **9** shows a perspective view of a prior art standard MPO SFP **900**. The SFP **900** is configured to receive a standard MPO connector, and provides a receptacle **902** for receiving an MPO connector having a conventional width, as shown for example in FIGS. **10**A to **10**C.

FIG. **10**A shows a perspective view of a conventional MPO connector **1000**. As shown in FIG. **10**B, the conventional MPO connector **1000** has a width of 12.4 mm. FIG. **10**C shows a front view of the MPO connector **1000**.

FIG. **11** shows an embodiment of a future narrow width multi-fiber SFP **1100** according to aspects of the present disclosure. Various embodiments disclosed herein are configured for use with the narrow width multi-fiber SFP **1100**, having a width less than that of conventional MPO connectors, that is less than about 12.4 mm. The narrow width multi-fiber SFP has a receptacle **1102** configured to receive a narrow width multi-fiber connector, such as a narrow width connector having an MT ferrule.

FIG. **12**A shows one embodiment of a narrow width connector **1200** according to aspects disclosed herein. The narrow width connector **1200** is a multi-fiber connector including a multi-fiber MT/MPO ferrule **1202**. The connector **1200** includes two extending members or latching arms **1204**. In other embodiments, the connector may include at least one latching arm. The connector **1200** has a width of 9.6 mm, as shown in the top view of the connector **1200** in FIG. **12**B. In other embodiments, the connector width may be less than that of the width of conventional multi-fiber connectors, for example less than the 12.4 mm of the conventional MPO connector shown in FOG. **10**B. In some embodiments, the width may be about 9.6 mm or less.

The connector **1200** further includes a housing **1206** having a bottom housing **1208** and a top housing **1210**. The bottom housing **1208** includes side walls **1212**. In various embodiments, the housing of the connector may be a switchable housing. The side walls may be configured to open so as to facilitate opening of the housing, for example to change polarity of the connector. The side walls **1212** may be raised towards the rear of the connector. One advantage of raising the side walls towards the rear of the connector is easier access. The side walls may also be raised at another location.

The connector **1200** further includes a pull tab **1214** having a distal end **1216** and a proximal end **1218**. The pull tab **1214** further includes a spring **1220** configured to provide a force such that the connector latching arms **1204** return to the undisplaced position and thereby become fully

engaged inside the SFP's recess. The distal end **1216** of the pull tab **1214** may be pulled to remotely release the connector **1200** from an SFP or adapter. The proximal end **1218** of the pull tab **1214** is uniquely shaped so as to engage with the unique profile of the latching arms **1204** of the narrow width multi-fiber connector **1200**. The proximal end **1218** engages both latching arms **1204** of the multi-fiber connector **1200**. That is, the proximal end **1218** includes a single prong configured to engage the latching arms **1204**. At the proximal end **1218** of the pull tab **1214** there are outwardly pointing pins **1222** configured to rest directly above and slide along the semi-circular surface of latching arms **1204**. The horizontal and rearward path direction of the pins **1222** causes the semi-circular profile of the connector latching arms **1204** to flex downward. Because the pins **1222** are not contained inside ramped grooves of the connector latching arms **1204**, the pull tab **1214** can also be pushed down at a location directly behind the latching arms **1204** rather than pulling the tab in a rearward motion from a remote distance behind the connector, such as from the distal end **1216**. The action of pushing down the connector's integral levers or latching arms **1204** unlatches the connector **1200**. In some cases, the horizontal motion of the pull tab **1214** may not be desirable. Thus, the connector latching arms **1204** may be pushed down without resulting in a horizontal motion of the pull tab **1214**.

FIGS. **12**B and **12**C show top and front views, respectively, of the narrow width multi-fiber connector **1200**. FIG. **12**B further shows that the connector **1200** has a width of 9.6 mm.

In various embodiments described above, the narrow width connectors have latching arms configured to engage with a fixed or immovable recess within a narrow width SFP or a narrow width adapter. In these embodiments, the pull tab of the connector displaces the flexible latching arm of the connector so as to disengage the latching arm from the recess of the SFP or the adapter. For example, the latching arms bend down as the pull tab is pulled back, so as to disengage the connector from the SFP or the adapter.

In other embodiments, as further described for example in relation with FIGS. **13** to **15** below, the remote latch release pull tab may be configured to couple with a latch or a hook within the adapter or the SFP. In these embodiments, the flexible latching arm of the connector is moved into the main cavity of the SFP or the adapter, and the latch of the SFP or the adapter engages a recess of the connector when the pull tab is in a normal location that is pushed forward by a spring. The pull tab may be configured to have a ramp area such that when the pull tab is pulled back, the latch of the SFP or the adapter is lifted by the retracted pull tab, thereby disengaging the latch of the SFP or the adapter from the connector.

FIG. **13**A shows a narrow pitch multi-fiber connector **1300** inserted into a narrow pitch SFP **1302** such that a recess of the connector engages an SFP latch. FIG. **13**B shows the narrow pitch connector **1300** inserted into a narrow pitch adapter **1304** such that a recess of the connector engages a latch of the adapter.

FIG. **14** shows a side view of the narrow width connector **1300** of FIG. **13**A coupled to the narrow width SFP **1302**. Details of the coupling are shown within the circle **1400**. Specifically, the SFP **1302** includes an SFP latch **1402**. The connector **1300** includes a recess **1404**. For example, the connector housing may comprise a recess **1404**. The pull tab **1406** may be spring loaded as described in relation to various embodiments. This allows the pull tab **1406** to return to a position that will allow the SFP latch **1402** to engage with the connector recess **1404**. When the pull tab **1406** is in the normal pull tab location, that is pushed forward by a spring, as shown in FIG. **14**, the SFP latch **1402** is engaged with the connector recess **1404** as illustrated within the circle **1400**.

FIG. **15** shows a side view of the narrow width connector **1300** of FIG. **13**A as it is disengaged from the narrow width SFP **1302**. Details of the decoupling are shown within the circle **1500**. The pull tab **1406** includes a taper or a ramp area **1502**. As the pull tab **1406** is pulled back in the direction of the arrow **1504** as shown, the SFP latch **1402** is lifted by the ramp area of the retracted pull tab, thereby disengaging the SFP latch **1402** from the connector as illustrated within the circle **1500**. The same effect described herein in conjunction with FIG. **15** also occurs in other embodiments of connectors coupled to a narrow width adapter as shown for example in FIG. **13**A.

Although FIGS. **14** and **15** illustrate coupling of the connector to a narrow width SFP, in other embodiments of the connector may be coupled to a narrow width adapter having an adapter latch, similar to that of the SFP latch. Further, although the embodiments shown in FIGS. **13** to **15** include a narrow width multi-fiber connector, embodiments also work with narrow pitch LC connectors.

In the above detailed description, reference is made to the accompanying drawings, which form a part hereof. In the drawings, similar symbols typically identify similar components, unless context dictates otherwise. The illustrative embodiments described in the detailed description, drawings, and claims are not meant to be limiting. Other embodiments may be used, and other changes may be made, without departing from the spirit or scope of the subject matter presented herein. It will be readily understood that the aspects of the present disclosure, as generally described herein, and illustrated in the Figures, can be arranged, substituted, combined, separated, and designed in a wide variety of different configurations, all of which are explicitly contemplated herein.

The present disclosure is not to be limited in terms of the particular embodiments described in this application, which are intended as illustrations of various aspects. Many modifications and variations can be made without departing from its spirit and scope, as will be apparent to those skilled in the art. Functionally equivalent methods and apparatuses within the scope of the disclosure, in addition to those enumerated herein, will be apparent to those skilled in the art from the foregoing descriptions. Such modifications and variations are intended to fall within the scope of the appended claims. The present disclosure is to be limited only by the terms of the appended claims, along with the full scope of equivalents to which such claims are entitled. It is to be understood that this disclosure is not limited to particular methods, reagents, compounds, compositions or biological systems, which can, of course, vary. It is also to be understood that the terminology used herein is for the purpose of describing particular embodiments only, and is not intended to be limiting.

With respect to the use of substantially any plural and/or singular terms herein, those having skill in the art can translate from the plural to the singular and/or from the singular to the plural as is appropriate to the context and/or application. The various singular/plural permutations may be expressly set forth herein for sake of clarity.

It will be understood by those within the art that, in general, terms used herein, and especially in the appended claims (for example, bodies of the appended claims) are generally intended as "open" terms (for example, the term "including" should be interpreted as "including but not limited to," the term "having" should be interpreted as

"having at least," the term "includes" should be interpreted as "includes but is not limited to," et cetera). While various compositions, methods, and devices are described in terms of "comprising" various components or steps (interpreted as meaning "including, but not limited to"), the compositions, methods, and devices can also "consist essentially of" or "consist of" the various components and steps, and such terminology should be interpreted as defining essentially closed-member groups. It will be further understood by those within the art that if a specific number of an introduced claim recitation is intended, such an intent will be explicitly recited in the claim, and in the absence of such recitation no such intent is present. For example, as an aid to understanding, the following appended claims may contain usage of the introductory phrases "at least one" and "one or more" to introduce claim recitations. However, the use of such phrases should not be construed to imply that the introduction of a claim recitation by the indefinite articles "a" or "an" limits any particular claim containing such introduced claim recitation to embodiments containing only one such recitation, even when the same claim includes the introductory phrases "one or more" or "at least one" and indefinite articles such as "a" or "an" (for example, "a" and/or "an" should be interpreted to mean "at least one" or "one or more"); the same holds true for the use of definite articles used to introduce claim recitations. In addition, even if a specific number of an introduced claim recitation is explicitly recited, those skilled in the art will recognize that such recitation should be interpreted to mean at least the recited number (for example, the bare recitation of "two recitations," without other modifiers, means at least two recitations, or two or more recitations). Furthermore, in those instances where a convention analogous to "at least one of A, B, and C, et cetera" is used, in general such a construction is intended in the sense one having skill in the art would understand the convention (for example, "a system having at least one of A, B, and C" would include but not be limited to systems that have A alone, B alone, C alone, A and B together, A and C together, B and C together, and/or A, B, and C together, et cetera). In those instances where a convention analogous to "at least one of A, B, or C, et cetera" is used, in general such a construction is intended in the sense one having skill in the art would understand the convention (for example, "a system having at least one of A, B, or C" would include but not be limited to systems that have A alone, B alone, C alone, A and B together, A and C together, B and C together, and/or A, B, and C together, et cetera). It will be further understood by those within the art that virtually any disjunctive word and/or phrase presenting two or more alternative terms, whether in the description, claims, or drawings, should be understood to contemplate the possibilities of including one of the terms, either of the terms, or both terms. For example, the phrase "A or B" will be understood to include the possibilities of "A" or "B" or "A and B."

In addition, where features or aspects of the disclosure are described in terms of Markush groups, those skilled in the art will recognize that the disclosure is also thereby described in terms of any individual member or subgroup of members of the Markush group.

As will be understood by one skilled in the art, for any and all purposes, such as in terms of providing a written description, all ranges disclosed herein also encompass any and all possible subranges and combinations of subranges thereof. Any listed range can be easily recognized as sufficiently describing and enabling the same range being broken down into at least equal halves, thirds, quarters, fifths, tenths, et cetera As a non-limiting example, each range discussed herein can be readily broken down into a lower third, middle third and upper third, et cetera As will also be understood by one skilled in the art all language such as "up to," "at least," and the like include the number recited and refer to ranges which can be subsequently broken down into subranges as discussed above. Finally, as will be understood by one skilled in the art, a range includes each individual member. Thus, for example, a group having 1-3 cells refers to groups having 1, 2, or 3 cells. Similarly, a group having 1-5 cells refers to groups having 1, 2, 3, 4, or 5 cells, and so forth.

Various of the above-disclosed and other features and functions, or alternatives thereof, may be combined into many other different systems or applications. Various presently unforeseen or unanticipated alternatives, modifications, variations or improvements therein may be subsequently made by those skilled in the art, each of which is also intended to be encompassed by the disclosed embodiments.

The invention claimed is:

1. An optical fiber connector configured for mating with a receptacle, the optical fiber connector comprising:

an MT ferrule configured to hold a plurality of optical fibers;

a connector housing having a front end portion and a rear end portion spaced apart along a longitudinal axis, the connector housing configured to hold the MT ferrule such that the MT ferrule is exposed through the front end portion for making an optical connection;

a depressible latching arm connected to the connector housing for latching with the receptacle when the optical fiber connector is mated with the receptacle to releasably retain the optical fiber connector in the receptacle; and

a remote release connected to the connector housing for movement relative to the connector housing along the longitudinal axis, the remote release being configured to be pulled rearward along the longitudinal axis to depress the depressible latching arm for releasing the optical fiber connector from the receptacle;

wherein the connector housing has a generally rectangular perimeter including opposite first and second walls and opposite third and fourth walls, the depressible latching arm being located on an exterior of the first wall;

wherein the first wall of the connector housing defines a groove, the remote release being slidably received in the groove;

wherein the remote release comprises a lower portion and a narrower portion above the lower portion, the lower portion being wider than the narrower portion; and

wherein the groove includes an inner portion and an outer portion, the inner portion being wider than the outer portion, the inner portion of the groove being configured to slidably receive the lower portion of the latch release and the outer portion of the groove being configured to slidably receive the narrower portion of the latch release such that the first wall releasably retains the latch release in the groove.

2. The optical fiber connector as set forth in claim **1**, wherein the depressible latching arm has a front end portion and a rear end portion spaced apart along the longitudinal axis, the depressible latching arm extending transversely outward away from the first wall as the depressible latching arm extends longitudinally from the front end portion to the rear end portion.

3. The optical fiber connector as set forth in claim 2, wherein the optical fiber connector is free of depressible latching arms on an exterior of any of the second, third, and fourth walls.

4. The optical fiber connector as set forth in claim 1, wherein the optical fiber connector is configured so that upon release of the remote release after being pulled rearward along the longitudinal axis to depress the depressible latching arm, the depressible latching arm resiliently returns toward an un-depressed position.

5. The optical fiber connector as set forth in claim 1, wherein the depressible latching arm is a first depressible latching arm, the optical fiber connector further comprising a second depressible latching arm spaced apart from the first depressible latching arm.

6. The optical fiber connector as set forth in claim 5, wherein the remote release is further configured to depress the second depressible latching arm when the remote release is pulled rearward along the longitudinal axis.

7. The optical fiber connector as set forth in claim 5, wherein the remote release comprises a first edge for engaging the first depressible latching arm and a second edge for engaging the second depressible latching arm, the first and second edges being spaced apart from one another.

8. The optical fiber connector as set forth in claim 7, wherein the remote release further comprises an elongate section between the first edge and the second edge.

9. The optical fiber connector as set forth in claim 1, wherein the remote release comprises a front section and wherein the optical fiber connector is configured such that the front section is yieldably biased along the longitudinal axis toward the front end portion of the connector housing.

10. The optical fiber connector as set forth in claim 9, further comprising a resilient biasing member engaging the front section of the remote release to yieldably bias the remote release toward the front end portion of the connector housing.

11. The optical fiber connector as set forth in claim 10, wherein the depressible latching arm is configured to engage the front section of the remote release at a first point of contact and the resilient biasing member is configured to engage the front section of the remote release at a second point of contact, the second point of contact being spaced apart from the first point of contact along the longitudinal axis toward the rear end portion of the connector housing.

12. The optical fiber connector as set forth in claim 1, wherein the MT ferrule is configured to receive a plurality of fibers such that the fibers are spaced apart in a row that extends parallel to a fiber alignment axis, the MT ferrule comprising first and second guide pin openings spaced apart along the fiber alignment axis.

13. The optical fiber connector as set forth in claim 12, wherein the optical fiber connector has an outer cross-sectional dimension along the fiber alignment axis and wherein the outer cross-sectional dimension is less than an outer cross-sectional dimension of a standard MPO connector along a fiber alignment axis of the standard MPO connector.

14. The optical fiber connector as set forth in claim 1, wherein the connector housing is configured to enable a polarity of the optical fiber connector to be selectively reversed.

15. An optical connection system comprising the optical fiber connector as set forth in claim 1 and a receptacle for mating with the optical fiber connector.

16. The optical connection system as set forth in claim 15, wherein the receptacle comprises a rectangular perimeter wall.

17. The optical connection system as set forth in claim 16, wherein the receptacle includes a recess, the depressible latching arm being configured to latch with the recess when the optical fiber connector and the receptacle are mated.

* * * * *