kordz
Connectivity.Assured

Technical Data Sheet

ONE

ONE RJ45 CAT6 Field Termination Connector & Strain Relief

Kordz CAT6 RJ45 field termination connectors are designed and engineered for the installer to make installations easier. Even with something as small as an RJ45 plug, it must be engineered correctly and manufactured with precision processes to ensure that the connection is just going to work. These RJ45 connectors work with both solid and stranded cable 8 pins (gold plated) and 8 conductors.
Kordz CAT6 RJ45 field termination connectors make it easy to quickly and efficiently terminate CAT6 wires of any length. Large cable openings reduce the distance between the wires and contacts, creating optimal performance and reliable connections every time. The Kordz Pass Through CAT6 connectors are designed for fast RJ45 connector installations. Conductors easily pass through the RJ45 connector for fast and easy verification of wire sequence.

Connector Technical Specifications	
Part #: P1R45M-C6XU-CL	
Performance category	CAT6
Applications standard	TIA/EIA-568-2-D
Housing material	Polycarbonate
UL flammability rating	UL94V-2 [RoHS Compliant]
Contact type	Three prong pin for solid/stranded wires
Contact material	Copper
Contact plating	Gold Plating 50µ [1.27µm]
Housing colour	Clear
Shield type	Non-shielded
Operating temperature	-10º to 60ºC
Voltage/Current rating [UL applications]	125Volts AC/1.5Amps
Dielectric withstanding voltage	1500Volts DC / AC peak
Contact resistance	≤ 20mΩ
Insulation resistance	≥ 500MΩ
Insertion/Extraction cycles	≥ 1250 Cycles
Wire gauge min/max	min: 0.92mm Ø max: 1.02mm Ø
Conductor diameter min/max	min: 0.405mm Ø (26AWG) max: 0.511mm Ø (24AWG)
Maximum cable jacket diameter	6.5mm ODØ
Packaging	
Packaging type	Plastic re-usable jar
Items per jar	100 pcs / jar
Jar size	68mm[w] x 68mm[d] x 120mm[h]
Master carton box	32 Jars
Master carton size	265mm[w] x 341mm[d] x 330mm[h]
Recommended tool	
Model No.	Kordz ONE-RJ45TOOL1
Strain Relief Technical Specifications	
Part #: P1R45S-C6XU-CL	
Housing material	Polycarbonate
UL flammability rating	UL94V-2 [RoHS Compliant]
Inner Diameter Available	6.0mm ODØ
Colour Available	Clear
Packaging	
Packaging type	Plastic re-usable jar
Items per jar	100 pcs / jar
Jar size	68mm[w] x 68mm[d] x 120mm[h]
Master carton box	32 Jars
Master carton size	265mm[w] x 330mm[d] x 341mm[h]

Strain relief sold seperately
Available in jars of 100pcs

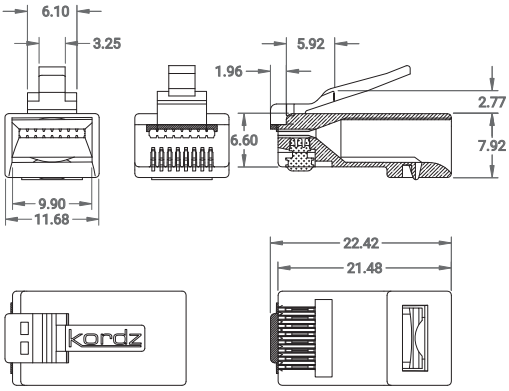

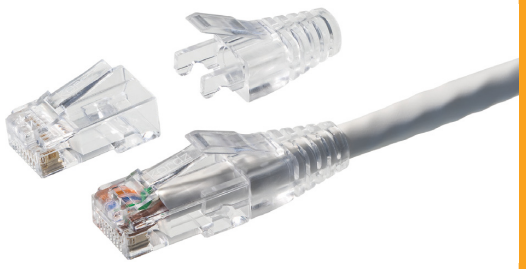

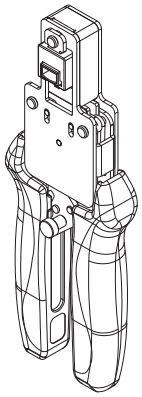

Kordz ONE-RJ45TOOL1

kordz.com

kordz.com

lead-free

RoHS 2002/95/EC

US Conec EX1012
IPR2024-00121
U.S. Patent No. 11,181,701

ONE RJ45 CAT6a Field Termination Connector

The Kordz Category 6a Shielded Field Termination RJ45 Connector offers easy, toolless termination and complies fully with ISO/IEC 11801 2.2 Edition Category 6a and ANSI/TIA-568-C.2 Category 6A standards for applications up to 10GBase-T Ethernet and frequencies up to 500Mhz. It offers a fully shielded brass nickel plated base, bronze nickel plated cover and gold plated phosphor bronze contact pins. Suitable for cable diameters between 6 and 8.5mm, whilst the strain relief is provided by the compression nut on the back of the connector. IDC termination accepts wire guages 22~26AWG. Two different wire managers are provided, one for 22~23AWG wires and the other for 24~26AWG wires. The connector is IP20 rated and 360º degrees shielding for greater tolerances to EMI/EMC. Designed and engineered for site termination and installation ease.

Technical Specifications	
Part #: P1R45M-C6AS-BK	
Performance category	CAT6a
Applications standard	ANSI/TIA-568-C.2 IEC 60603-7-51 ISO/IEC 11801 2.2 Edition CENELEC 50173-1:2011
Application support	10Base-T to 10GBase-T
Housing material	Polycarbonate(PC)
UL flammability rating	UL94V-0 [RoHS Compliant]
Contact type	Three prong for solid/stranded wires
Contact material	Gold over Nickel plating
Contact plating	Gold Plating 50µ [1.27µm]
Housing colour	White connector / Black outer case
Shield type	Shielded
Wire-Holder	PBT+10% GF
Plug-Contact	T=0.35mm Phosphor Bronze
Contact Area	Gold over Nickel Plating
IDC Contact	T=0.4mm Phospur Bronze, Sn over Nickel Plating
Shielded Base	T=0.5mm Brass, Nickel Plating
Shielded Cover	T=0.3mm Phosphor Bronz, Nickel Plating
Operating temperature	-40º to 70ºC
Current rating	1.5Amps
Dielectric withstanding voltage	1000Volts AC RMS 60Hz, 1 minute
Contact resistance	≤ 20mΩ @ 100mA max. 50mV max.
Insulation resistance	≥ 500MΩ @500V DC
Insertion/Extraction cycles	≥ 1000 mating cycles
Cable to Connector Tensile Strength	9kg (20lbs) (89N) min.
Wire gauge min/max	min: 0.92mm Ø max: 1.28mm Ø
Conductor diameter min/max	min: 0.405mm Ø (26AWG) max: 0.641mm Ø (22AWG)
Maximum cable jacket diameter	6.0 - 8.5mm ODØ
Packaging	
Packaging type for each conector	PE Bag
Items per box	10 pcs
Box size	150mm[w] x 110mm[d] x 70mm[h]
Master carton box	28 Inner boxes
Master carton size	485mm[w] x 365mm[d] x 230mm[h]
Recommended tool	
Model No.	NO TOOL REQUIRED

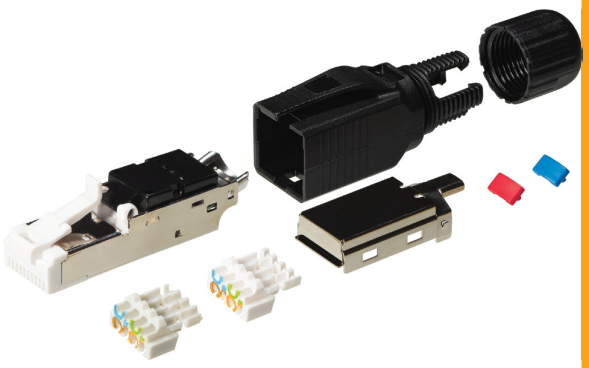

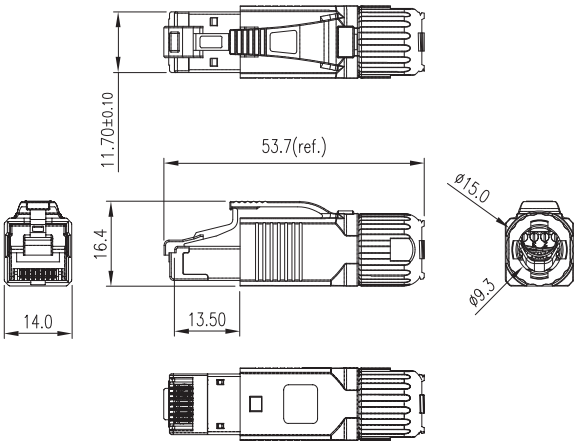

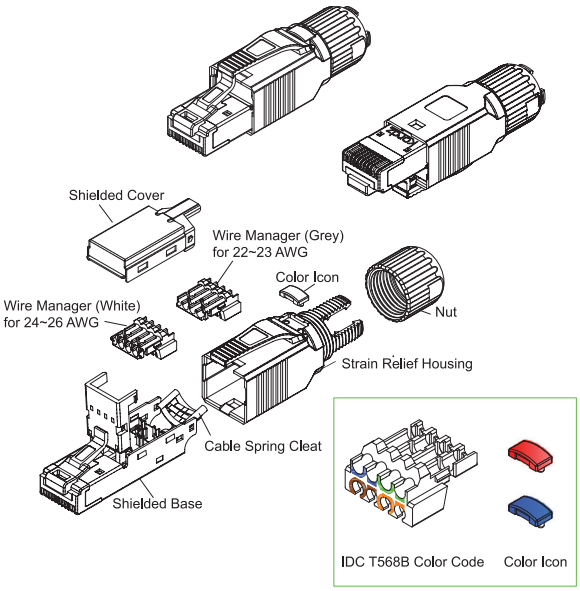

(E&OE) ©Kordz 2019