US011525965B2

(12) **United States Patent**
Childers et al.

(10) **Patent No.: US 11,525,965 B2**
(45) **Date of Patent: Dec. 13, 2022**

(54) **MINI DUPLEX CONNECTOR WITH PUSH-PULL POLARITY MECHANISM AND CARRIER WITH LATCH AND RAIL**

(71) Applicant: **US Conec, Ltd**, Hickory, NC (US)

(72) Inventors: **Darrell R. Childers**, Hickory, NC (US); **Jillcha F. Wakjira**, Hickory, NC (US); **Jason Higley**, Hickory, NC (US); **Michael E. Hughes**, Hickory, NC (US); **Mitchell Cloud**, Hickory, NC (US)

(73) Assignee: **US Conec Ltd.**, Hickory, NC (US)

(*) Notice: Subject to any disclaimer, the term of this patent is extended or adjusted under 35 U.S.C. 154(b) by 15 days.

(21) Appl. No.: **17/328,748**

(22) Filed: **May 24, 2021**

(65) **Prior Publication Data**

US 2021/0278609 A1 Sep. 9, 2021

Related U.S. Application Data

(63) Continuation of application No. 16/462,905, filed as application No. PCT/US2018/066523 on Dec. 19, 2018, now Pat. No. 11,016,251.

(60) Provisional application No. 62/634,271, filed on Feb. 23, 2018, provisional application No. 62/607,555, filed on Dec. 19, 2017.

(51) **Int. Cl.**
G02B 6/38 (2006.01)

(52) **U.S. Cl.**
CPC ***G02B 6/3898*** (2013.01); ***G02B 6/3812*** (2013.01); ***G02B 6/3825*** (2013.01); ***G02B 6/3857*** (2013.01); ***G02B 6/3893*** (2013.01)

(58) **Field of Classification Search**
None
See application file for complete search history.

(56) **References Cited**

U.S. PATENT DOCUMENTS

5,619,604	A	4/1997	Shiflett et al.
5,737,463	A	4/1998	Weiss et al.
6,019,521	A	2/2000	Manning et al.
6,352,373	B1	3/2002	Yamaguchi
6,513,989	B1	2/2003	Bleck et al.
6,572,276	B1	6/2003	Theis et al.
7,281,859	B2	10/2007	Mudd et al.
9,804,337	B2	10/2017	Anderson et al.

(Continued)

FOREIGN PATENT DOCUMENTS

DE	20116042	U1	1/2002
WO	2019126333	A1	6/2019

(Continued)

OTHER PUBLICATIONS

Extended European Search Report; dated Jul. 29, 2021; 8 pages.

(Continued)

Primary Examiner — Andrew Jordan
(74) *Attorney, Agent, or Firm* — Michael L. Leetzow PLLC; Shubhrangshu Sengupta

(57) **ABSTRACT**

A new fiber optic connector provides a smaller form factor by including two ferrule assemblies in a housing. The housing accepts a push-pull mechanism that allows for insertion and removal from a carrier as well as an adapter. The push-pull mechanism may also include a flexure member to return the push-pull mechanism. Polarity of the fiber optic connector may also be selected by use of the push-pull mechanism.

15 Claims, 37 Drawing Sheets

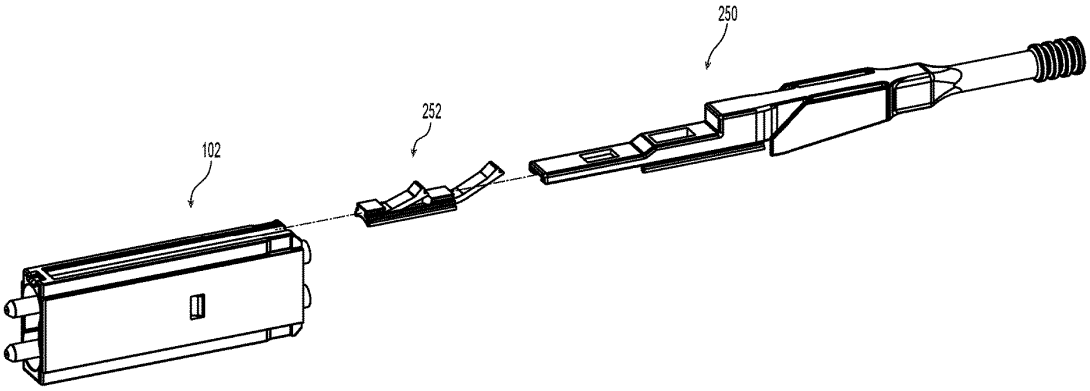

(56) **References Cited**

U.S. PATENT DOCUMENTS

9,857,538	B2	1/2018	Nguyen et al.
10,156,684	B2	12/2018	Nguyen et al.
10,191,230	B2	1/2019	Wong et al.
10,281,668	B2	5/2019	Takano et al.
10,527,802	B2	1/2020	Wong et al.
10,585,247	B2	3/2020	Takano et al.
10,677,996	B2	6/2020	Aoshima et al.
11,016,250	B2	5/2021	Higley et al.
11,016,251	B2	5/2021	Childers et al.
2010/0008635	A1	1/2010	Zimmel
2010/0220961	A1	9/2010	Jong et al.
2014/0133820	A1	5/2014	Zimmel
2014/0169727	A1	6/2014	Veatch et al.
2015/0030289	A1	1/2015	Jiang et al.
2015/0177463	A1	6/2015	Lee et al.
2015/0191024	A1	7/2015	Heath et al.
2016/0238796	A1	8/2016	Nguyen et al.
2016/0306125	A1	10/2016	Wu et al.
2016/0327757	A1	11/2016	Lee
2017/0139430	A1	5/2017	Gledhill, III et al.
2017/0299818	A1	10/2017	Chang et al.
2017/0343740	A1	11/2017	Nguyen
2018/0252872	A1	9/2018	Chen
2019/0018201	A1	1/2019	Takano et al.
2019/0278028	A1	9/2019	Higley
2020/0150357	A1	5/2020	Higley et al.
2020/0301077	A1	9/2020	Leigh et al.
2020/0371299	A1	11/2020	Gniadek et al.
2021/0278609	A1*	9/2021	Childers G02B 6/3878

FOREIGN PATENT DOCUMENTS

WO	2019195652	A1	10/2019
WO	2020160254	A1	8/2020

OTHER PUBLICATIONS

International Search Result/Written Opinion in PCT/US2020/160254, dated May 20, 2020.

FOCIS 10 Fiber Optic Connector Intermateability Standard—Type LC, Mar. 6, 2002.

* cited by examiner

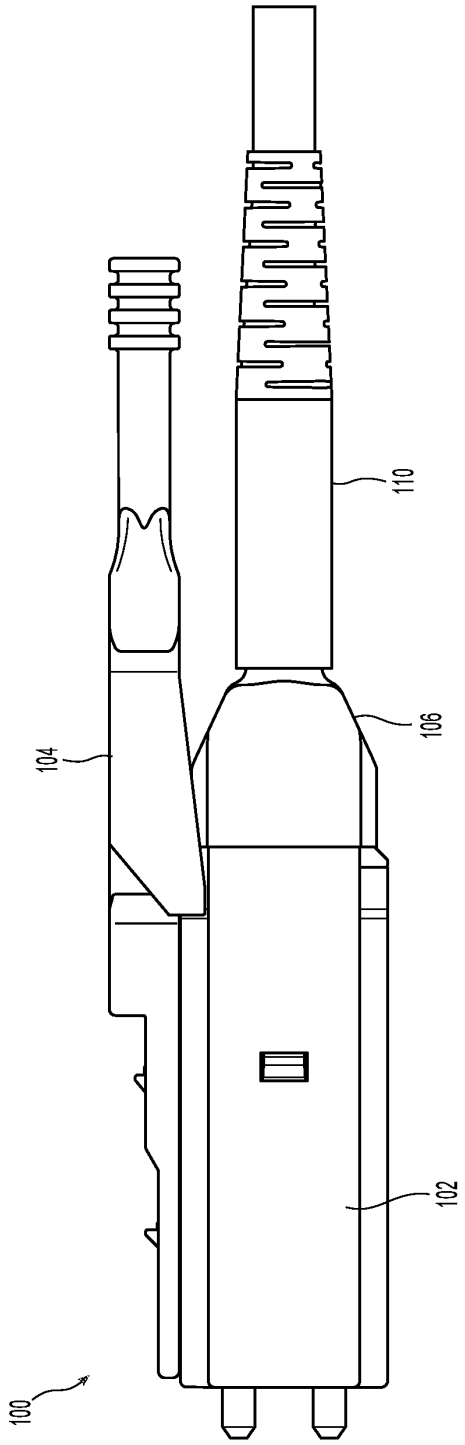

Fig. 1

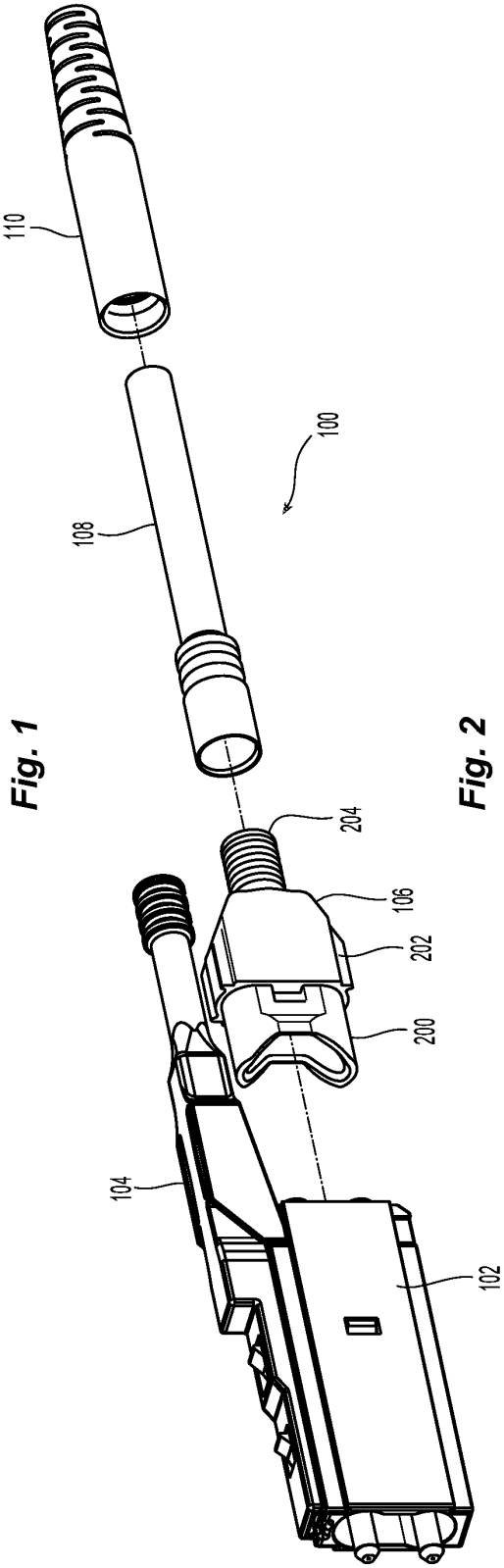

Fig. 2

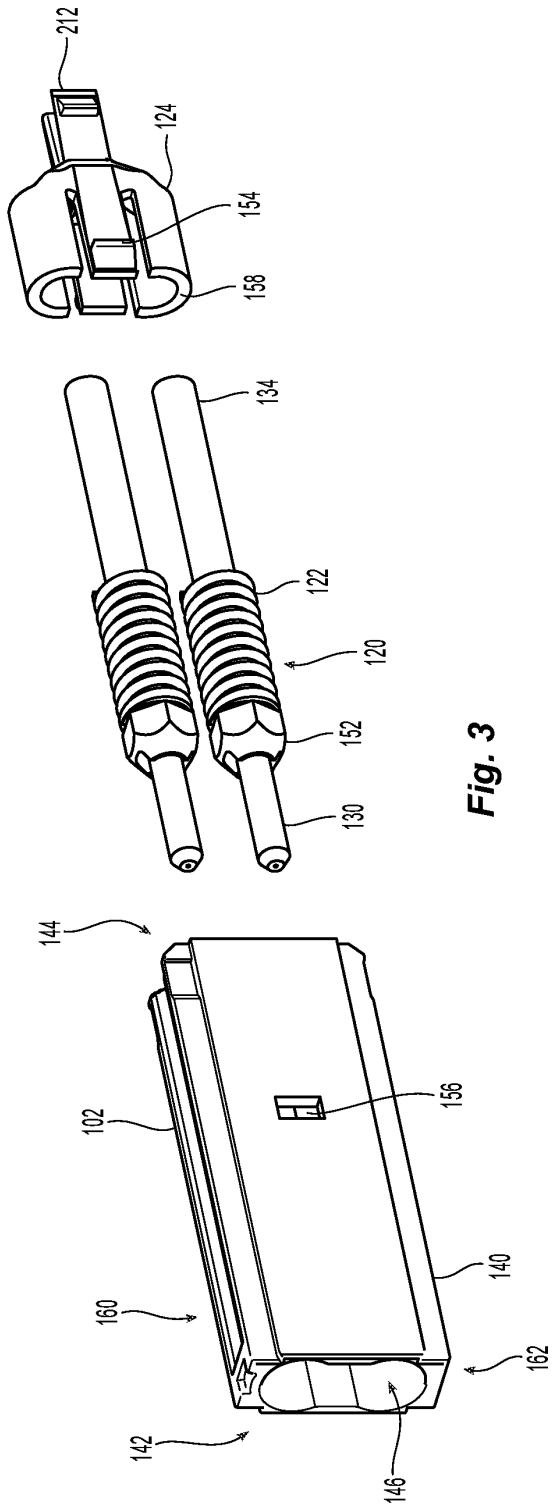
212
124
154
158
134
122
120
152
130
144
102
156
160
140
162
142
146

Fig. 3

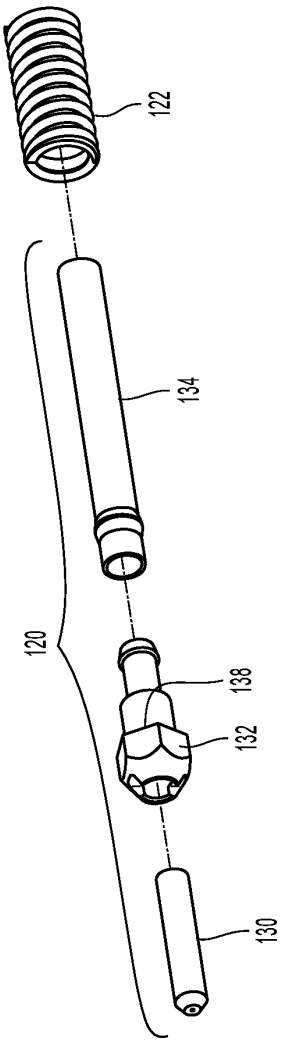
122
134
120
138
132
130

Fig. 3A

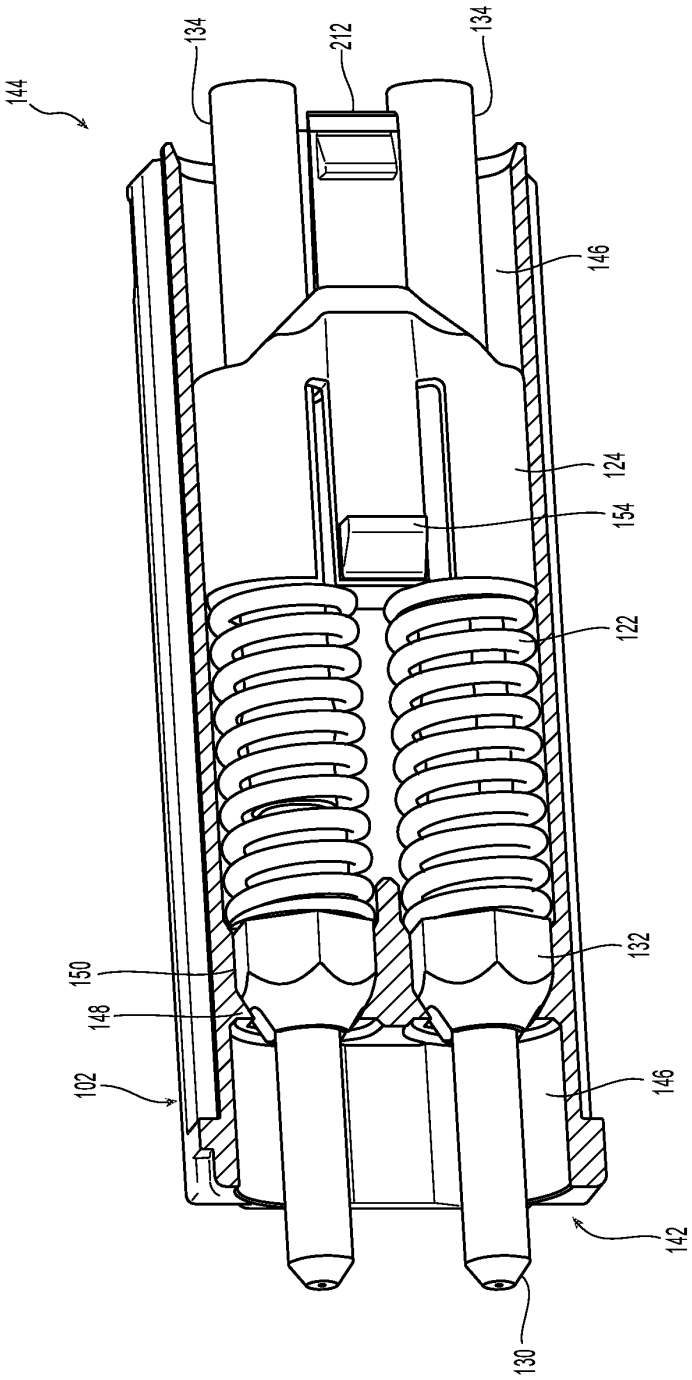

Fig. 4

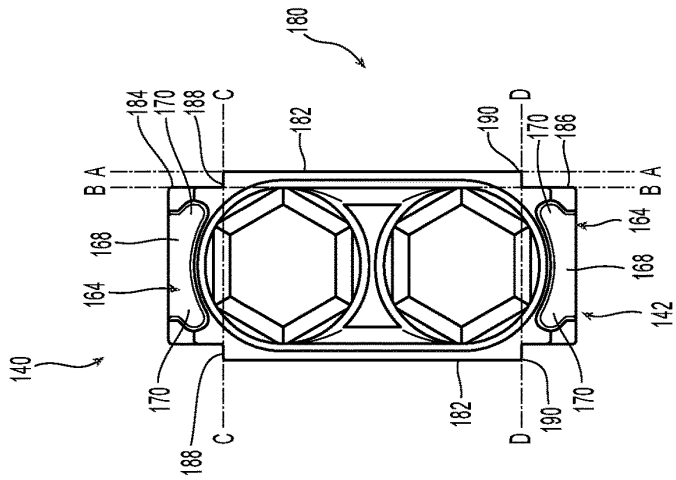
180
184
170
188
C
182
190
D
170
186
B A
B A
168
164
164
168
140
142
170
188
C
182
D
190
170

Fig. 6

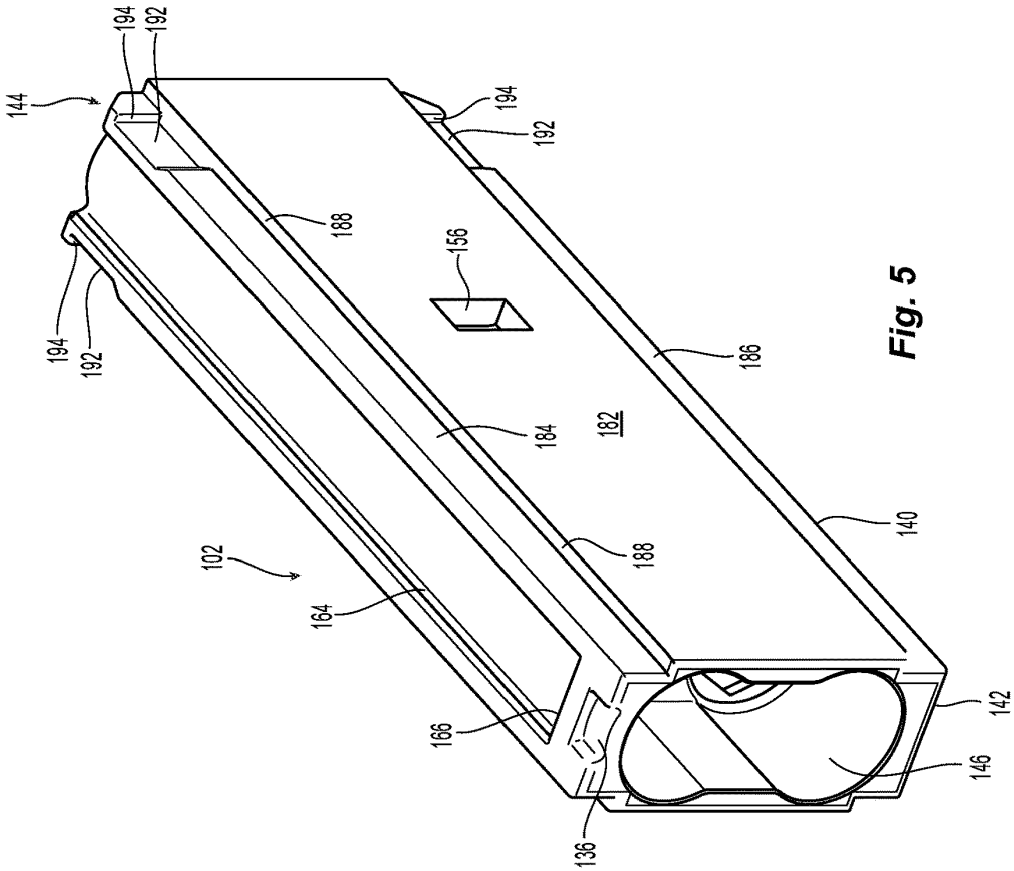
144
194
192
194
192
188
156
194
192
186
184
182
102
188
140
164
142
166
146
136

Fig. 5

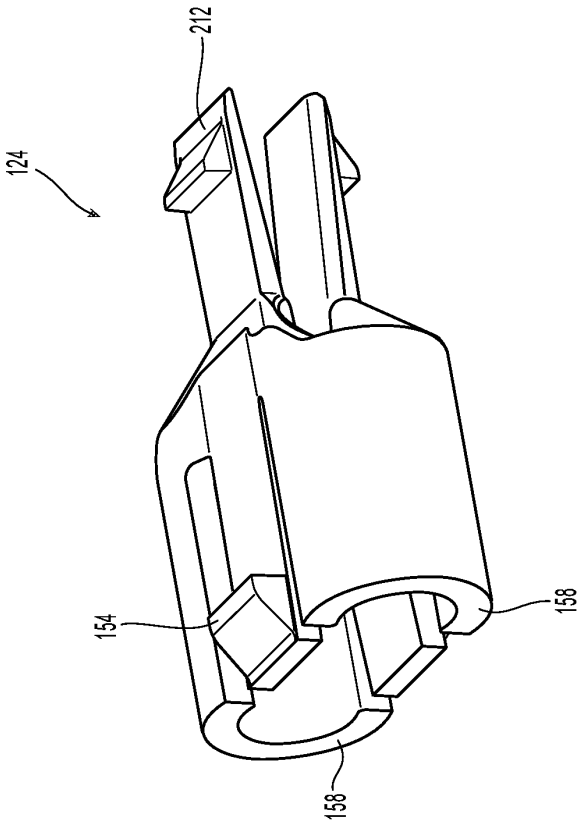

Fig. 7

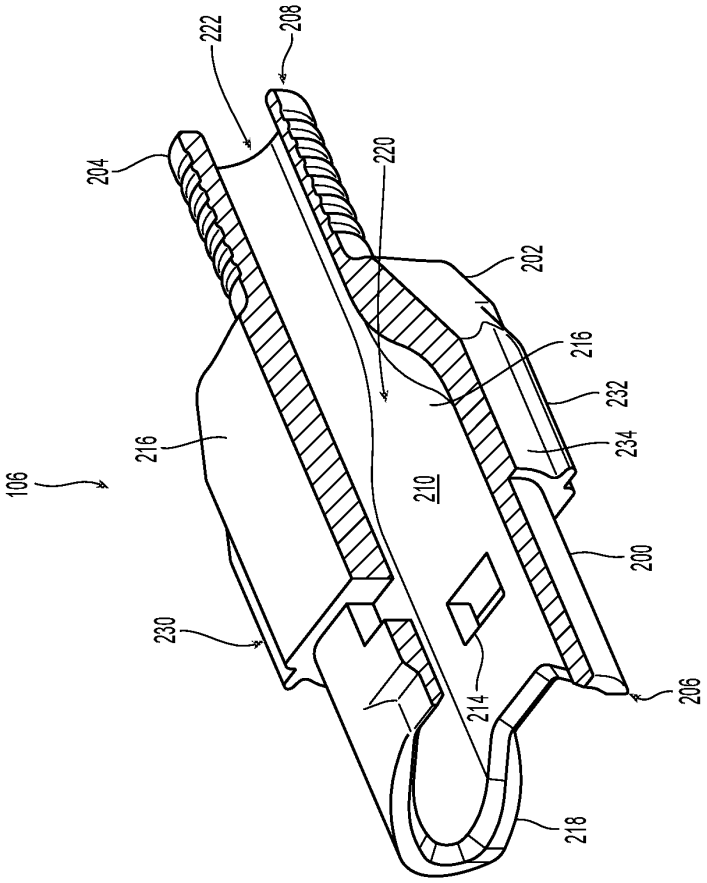
222
208
204
220
202
216
232
234
216
106
210
200
230
214
206
218

Fig. 9

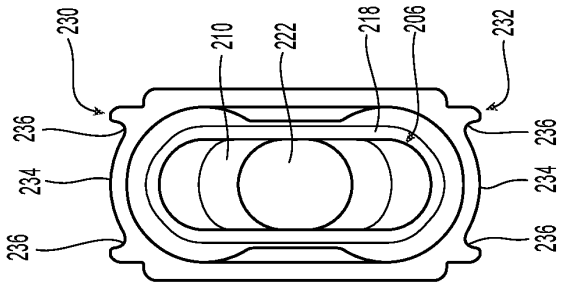
230
210
222
218
206
232
236
234
236
236
234
236

Fig. 8

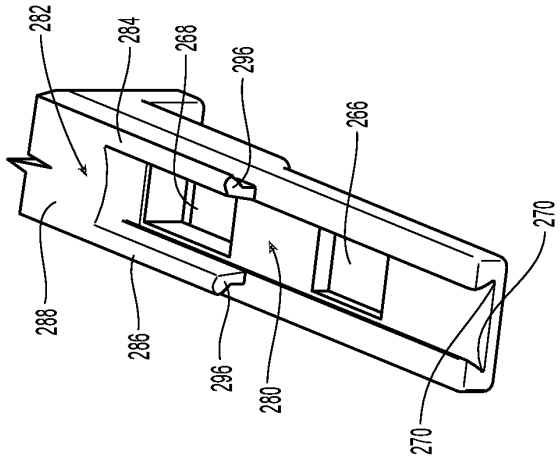

Fig. 10A

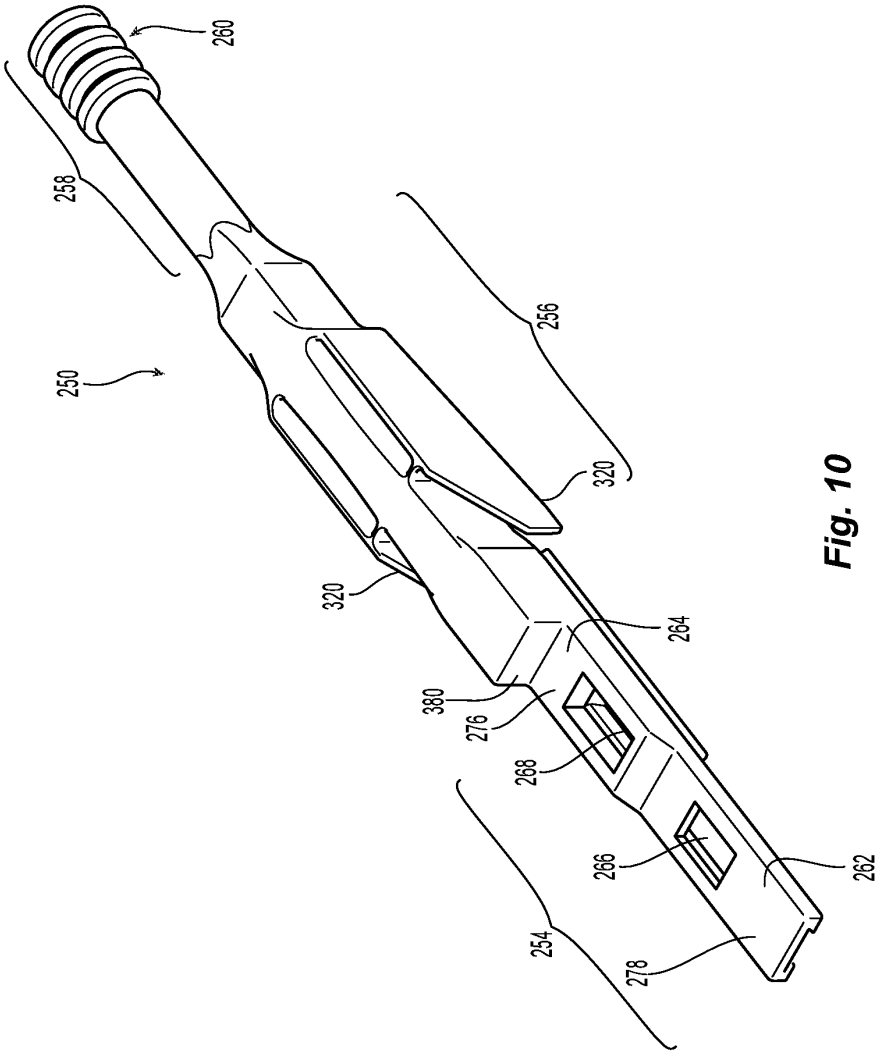

Fig. 10

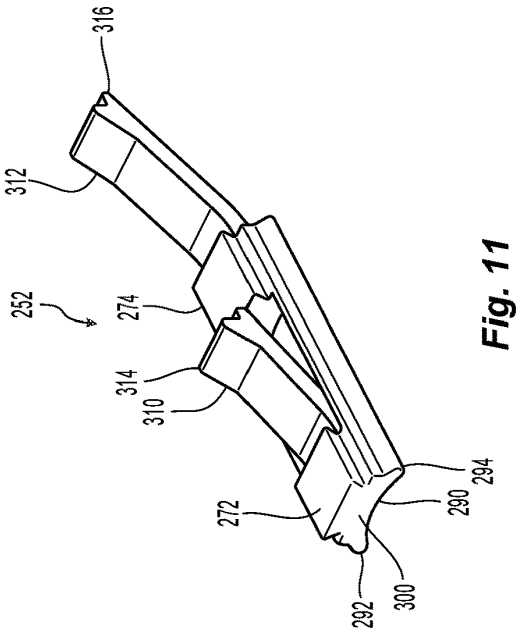

Fig. 11

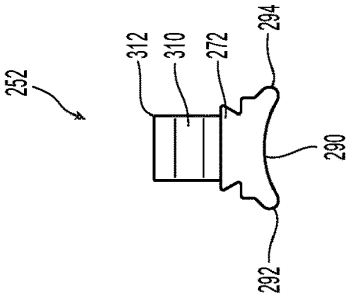

Fig. 12

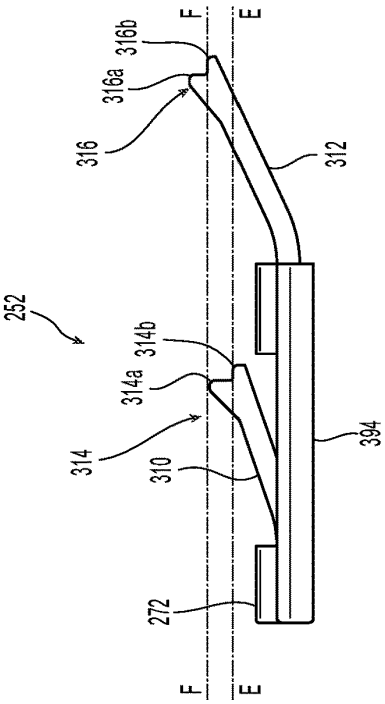

Fig. 13

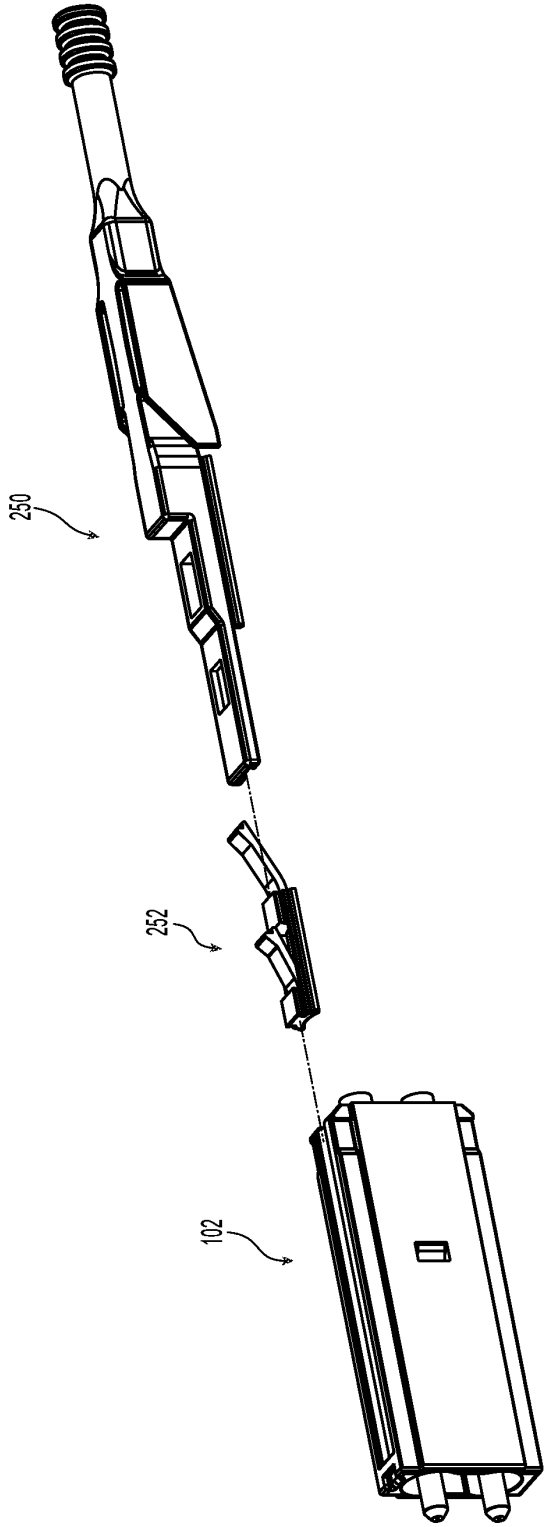

Fig. 14

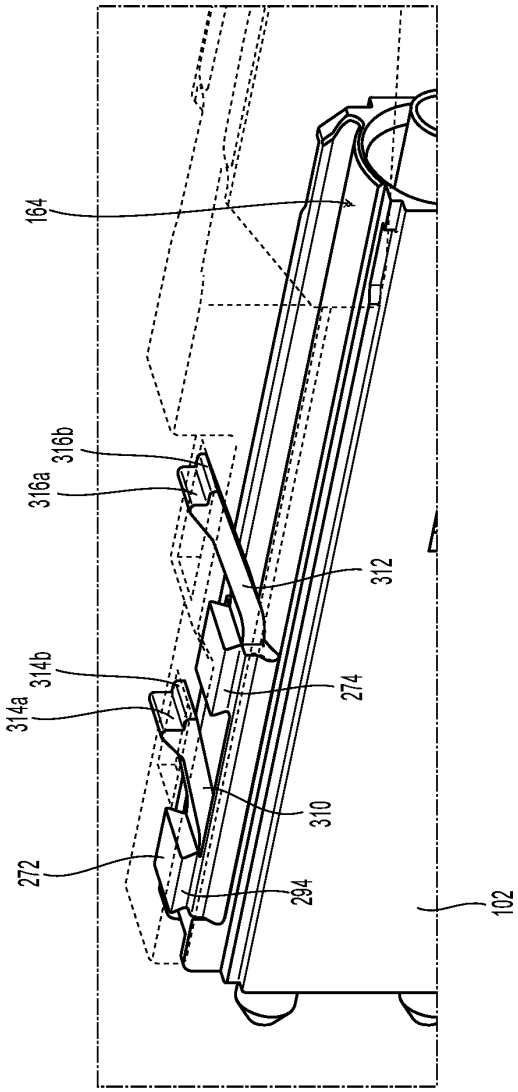

Fig. 15

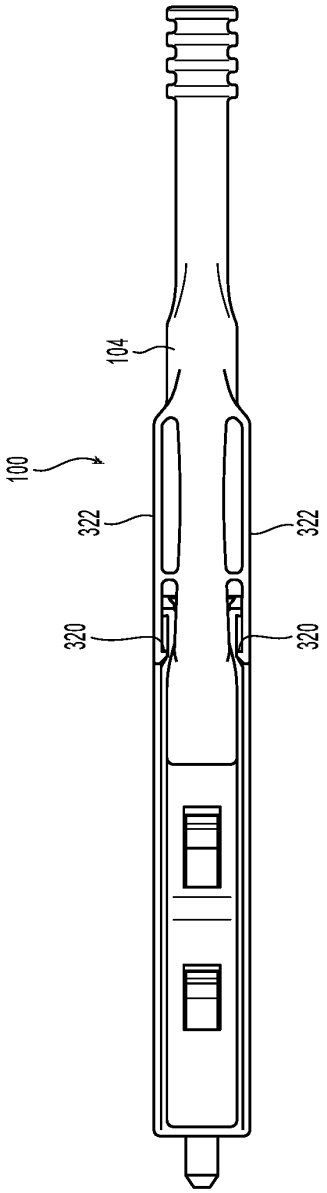

Fig. 16

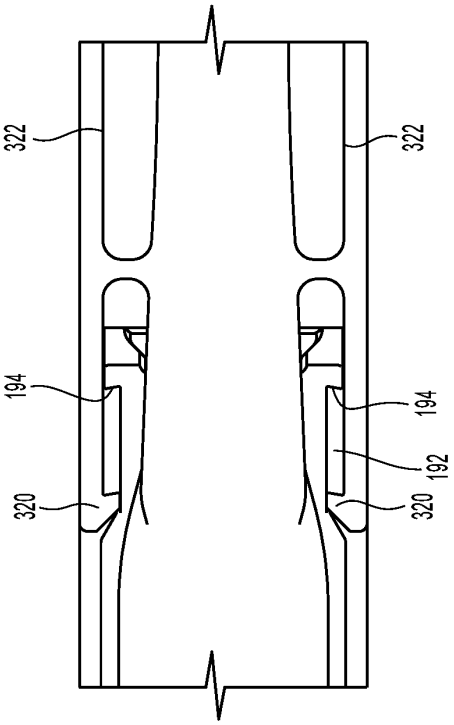

Fig. 17

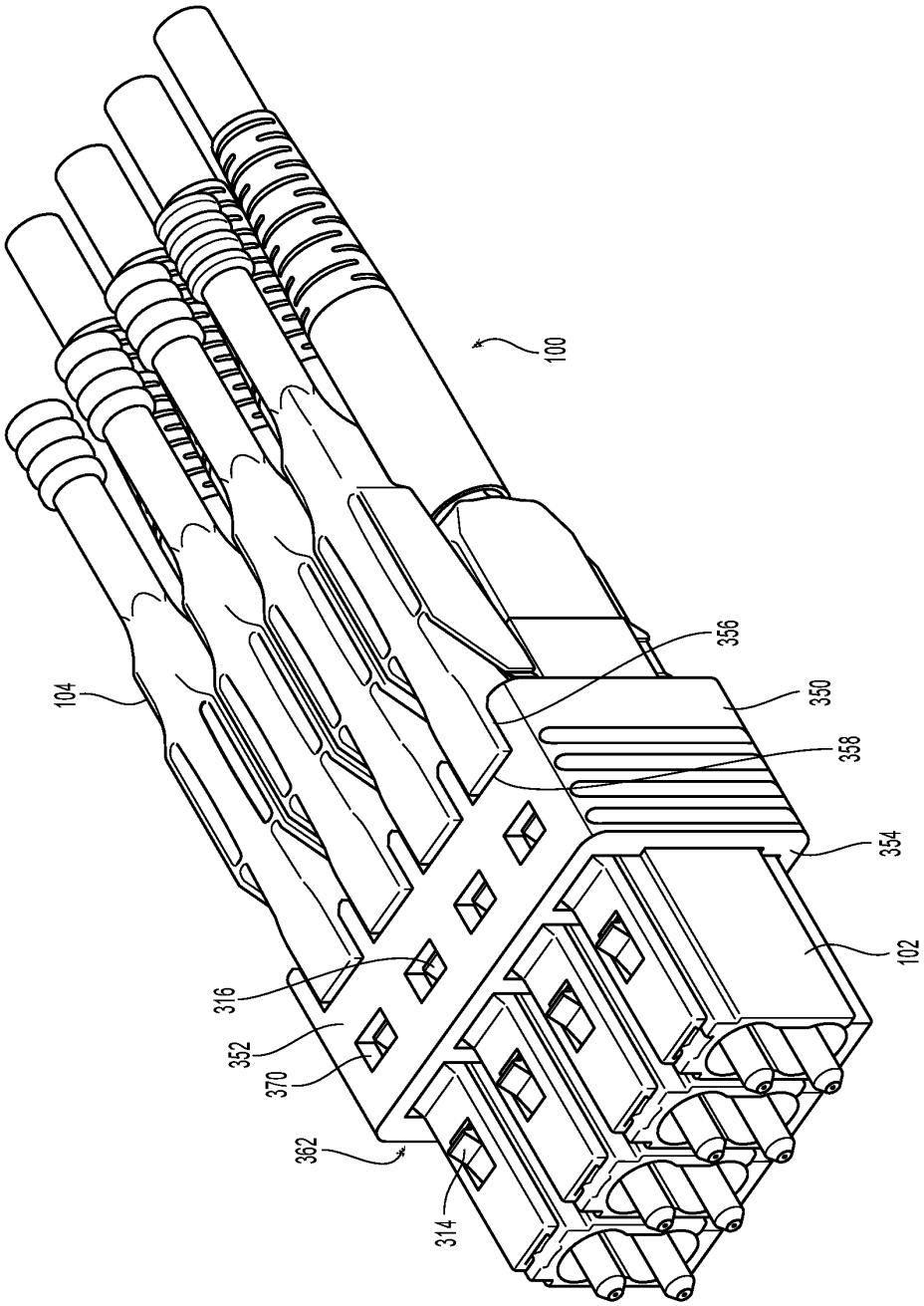

Fig. 18

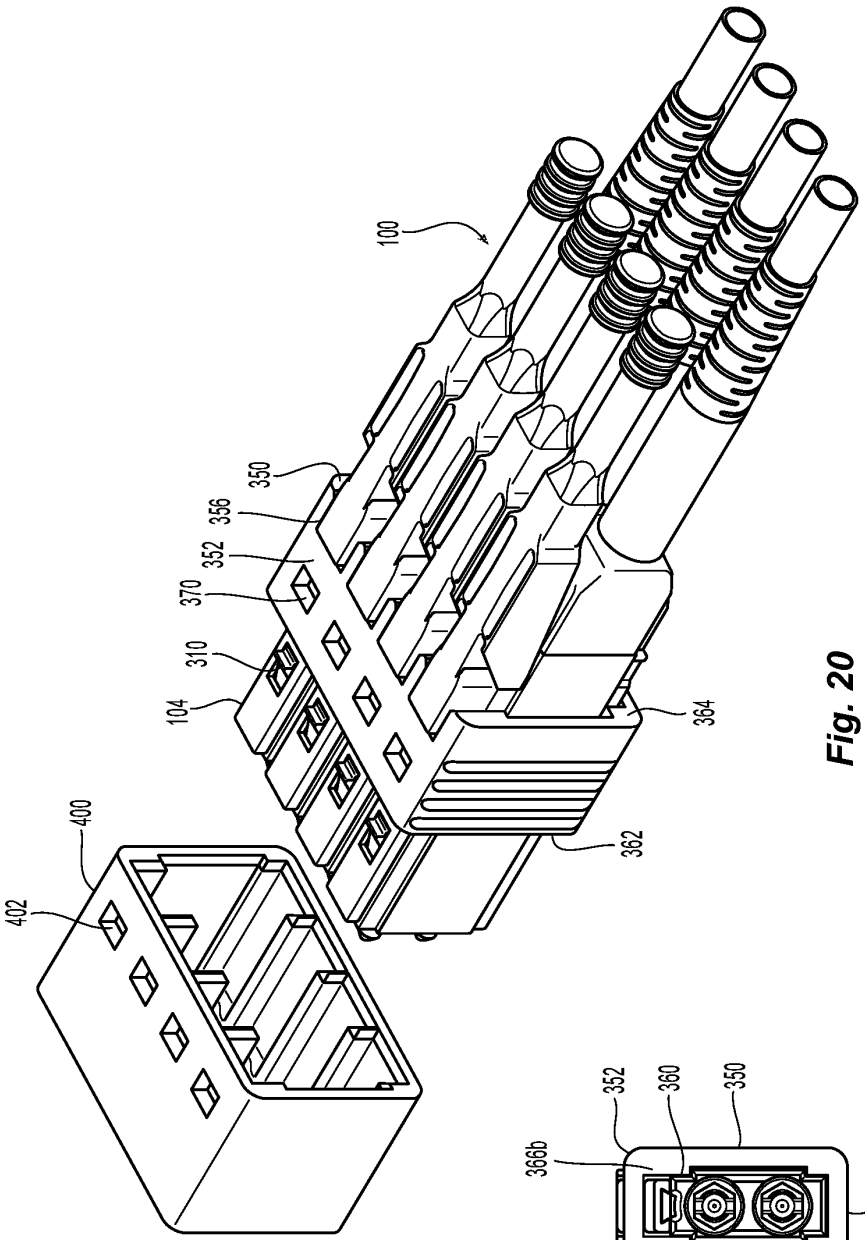
100
350
356
352
370
310
104
400
402
364
362

Fig. 20

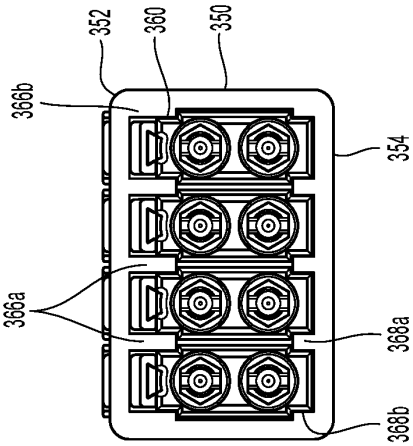
352
360
350
366b
354
366a
368a
368b

Fig. 19

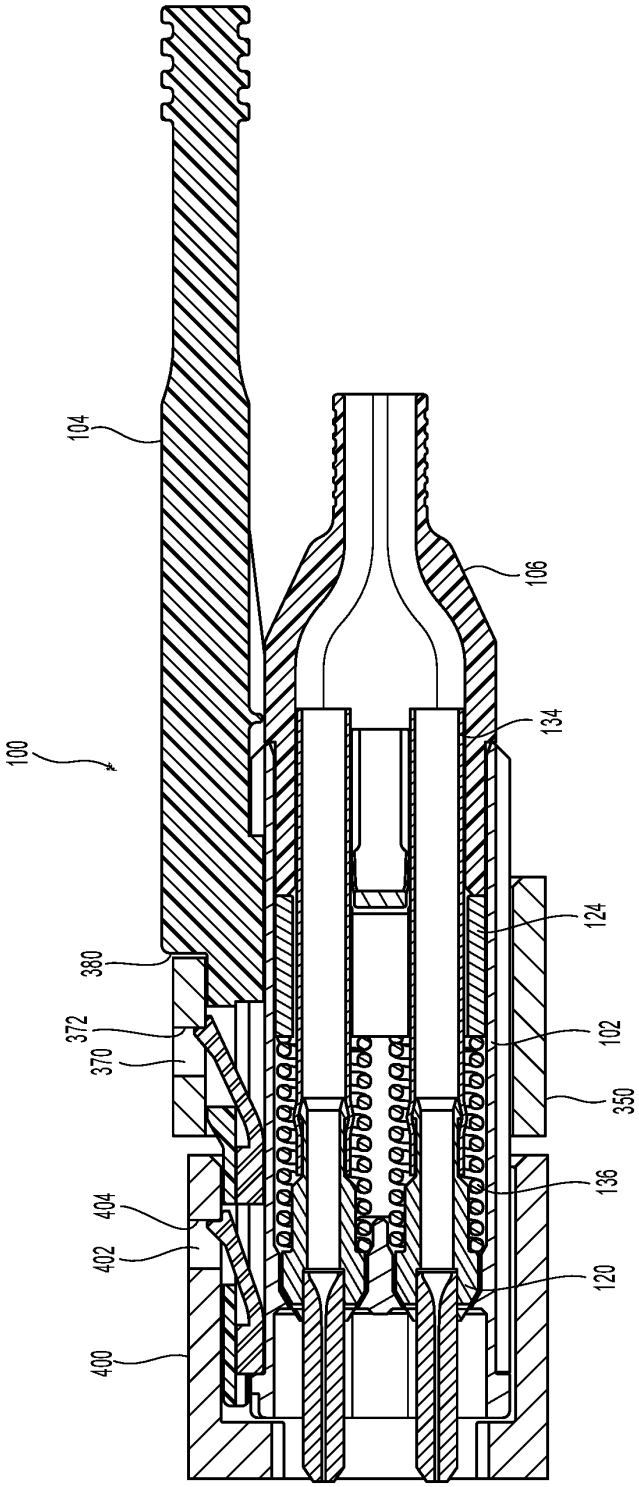

Fig. 21

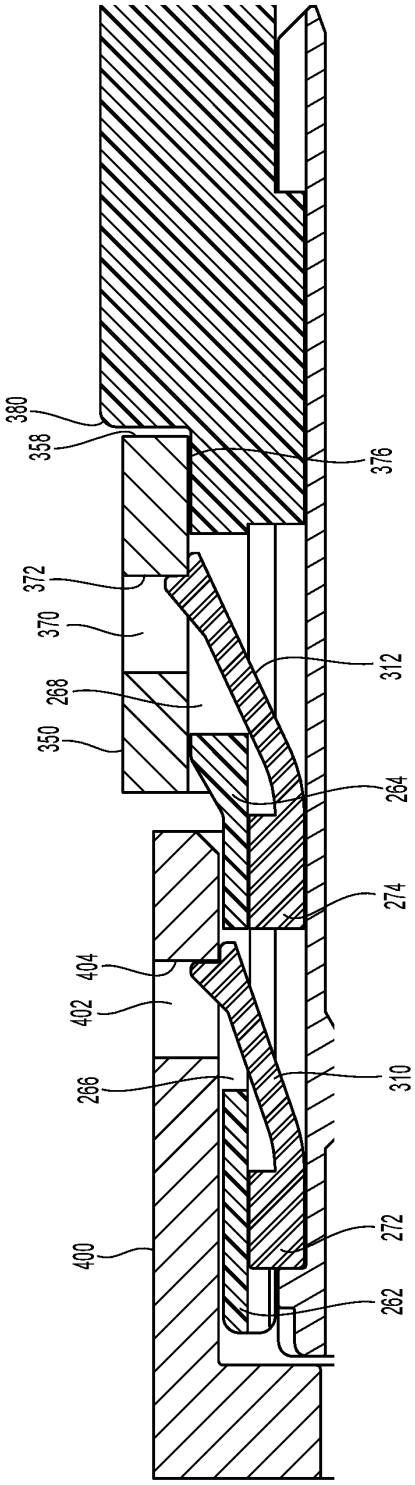
380
358
372
370
268
350
404
402
266
400
376
312
264
274
310
272
262

Fig. 22

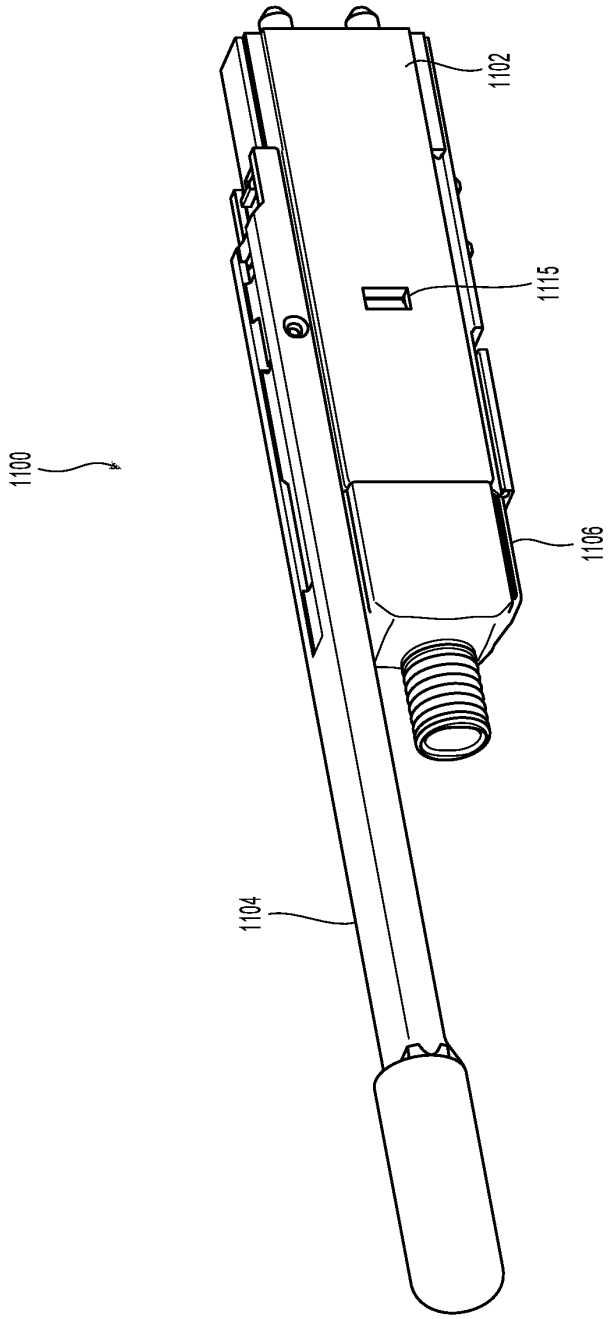

Fig. 23

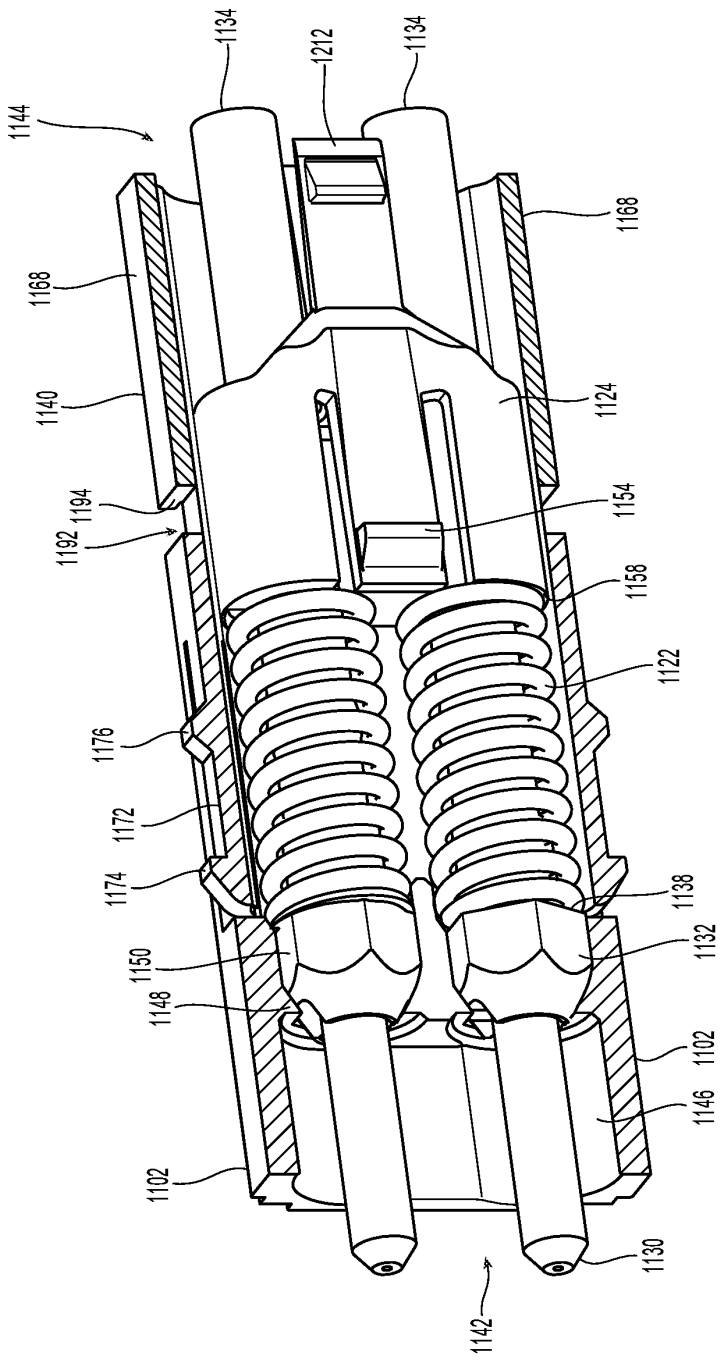
1144
1134
1212
1134
1168
1168
1140
1124
1194
1192
1154
1158
1122
1176
1172
1174
1138
1132
1150
1148
1102
1146
1102
1130
1142

Fig. 24

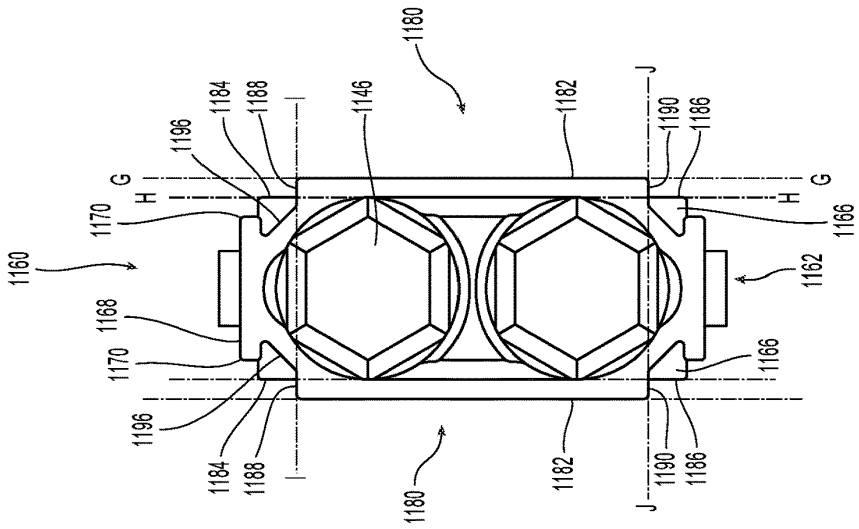
1180
1184
1188
1146
1182
1190
1186
1196
G
H
I
J
1170
1166
1160
1162
1168

Fig. 26

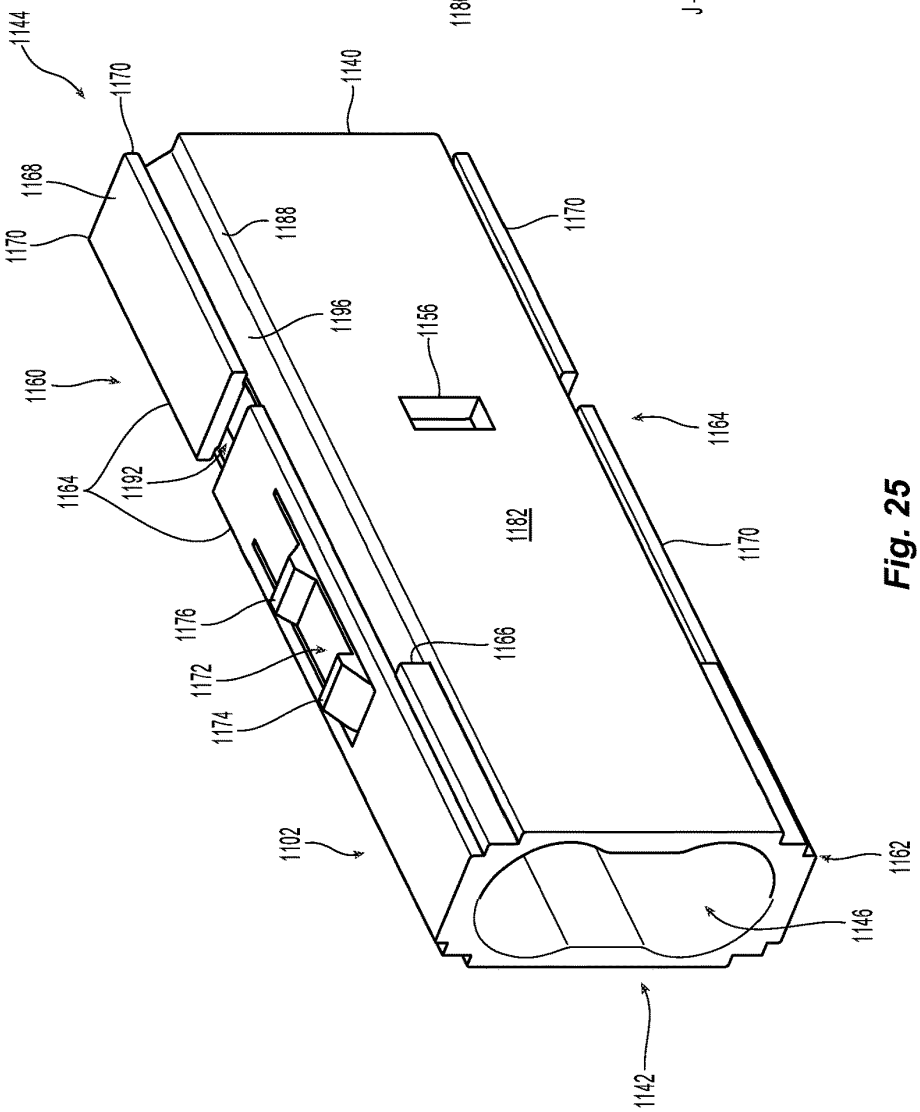
1144
1170
1140
1168
1188
1196
1156
1160
1164
1192
1182
1176
1172
1174
1166
1102
1162
1146
1142

Fig. 25

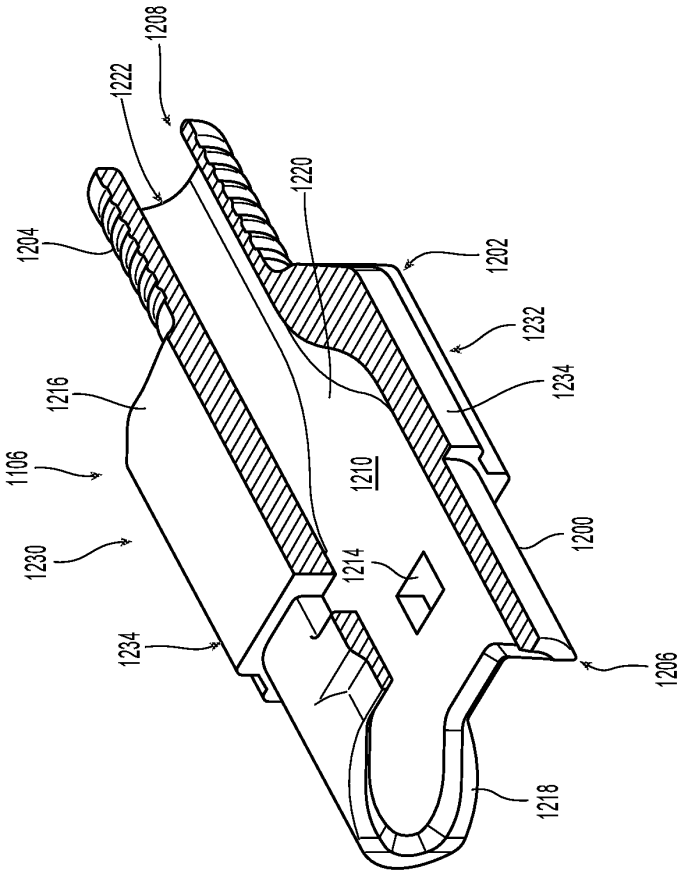
1208
1222
1204
1216
1106
1230
1234
1220
1210
1214
1202
1232
1234
1200
1206
1218

Fig. 27

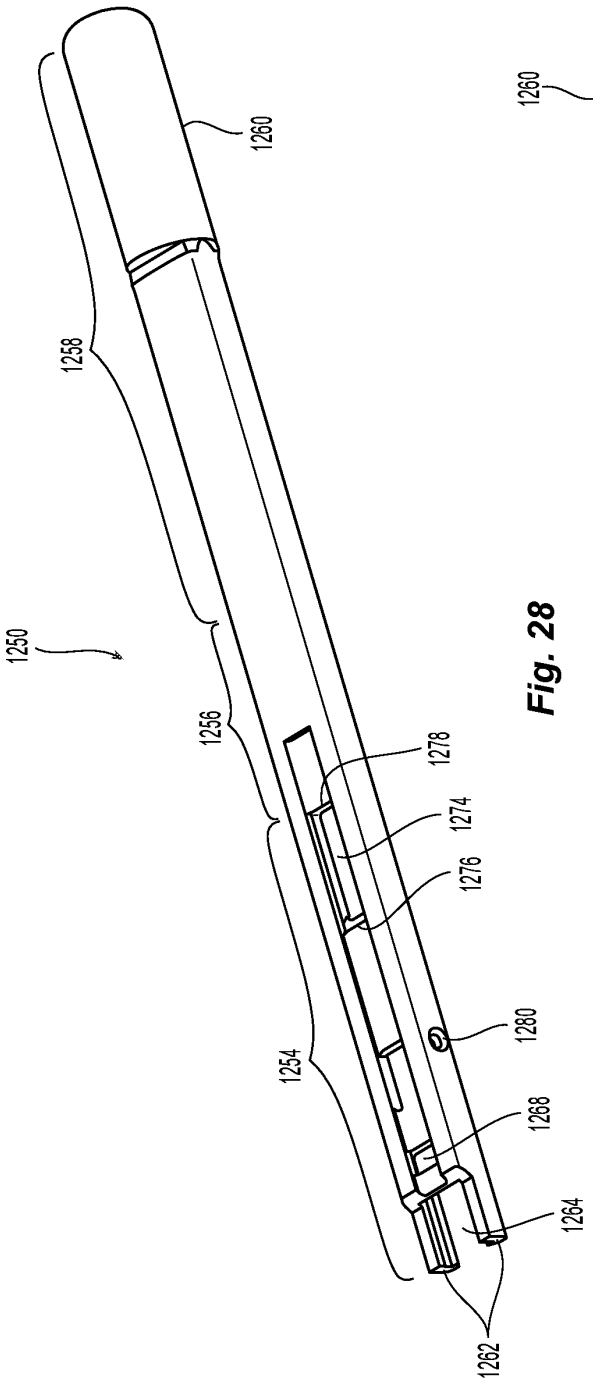
1250
1258
1260
1256
1254
1278
1274
1276
1280
1268
1264
1262

Fig. 28

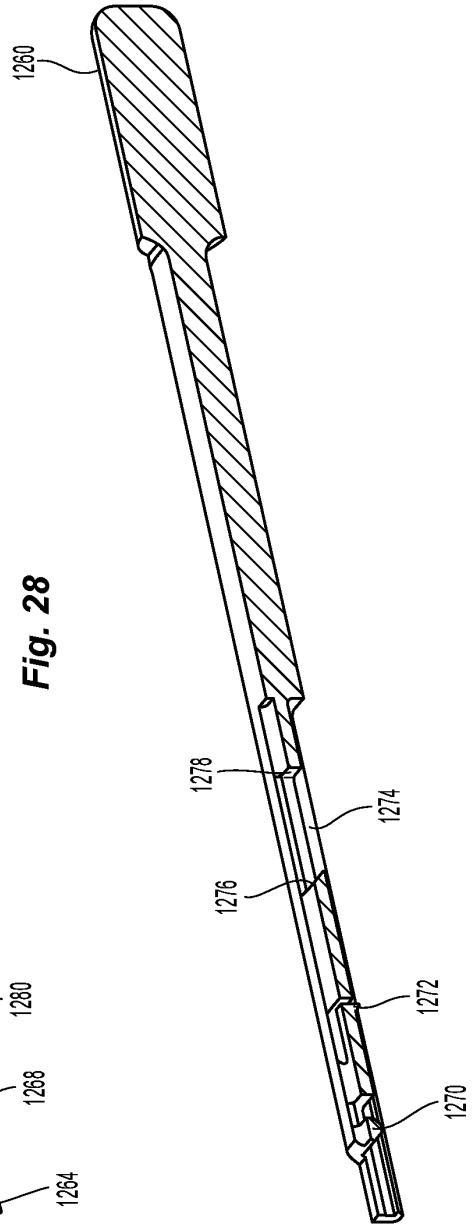
1260
1278
1274
1276
1272
1270

Fig. 29

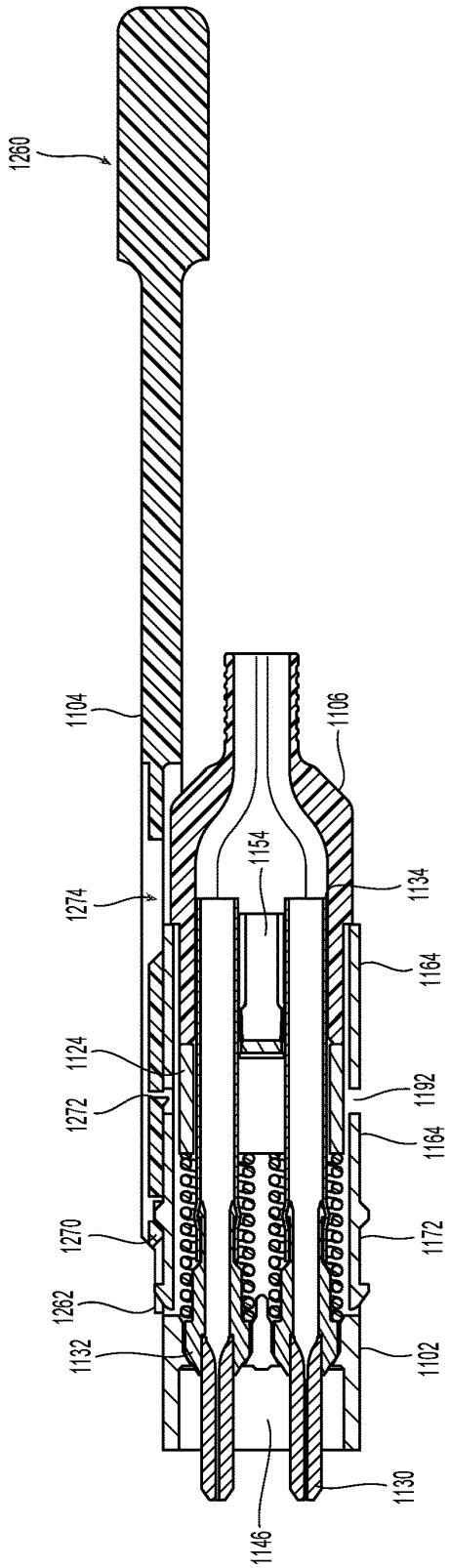
1260
1104
1274
1124
1272
1270
1262
1132
1146
1130
1102
1172
1164
1192
1164
1134
1154
1106

Fig. 30

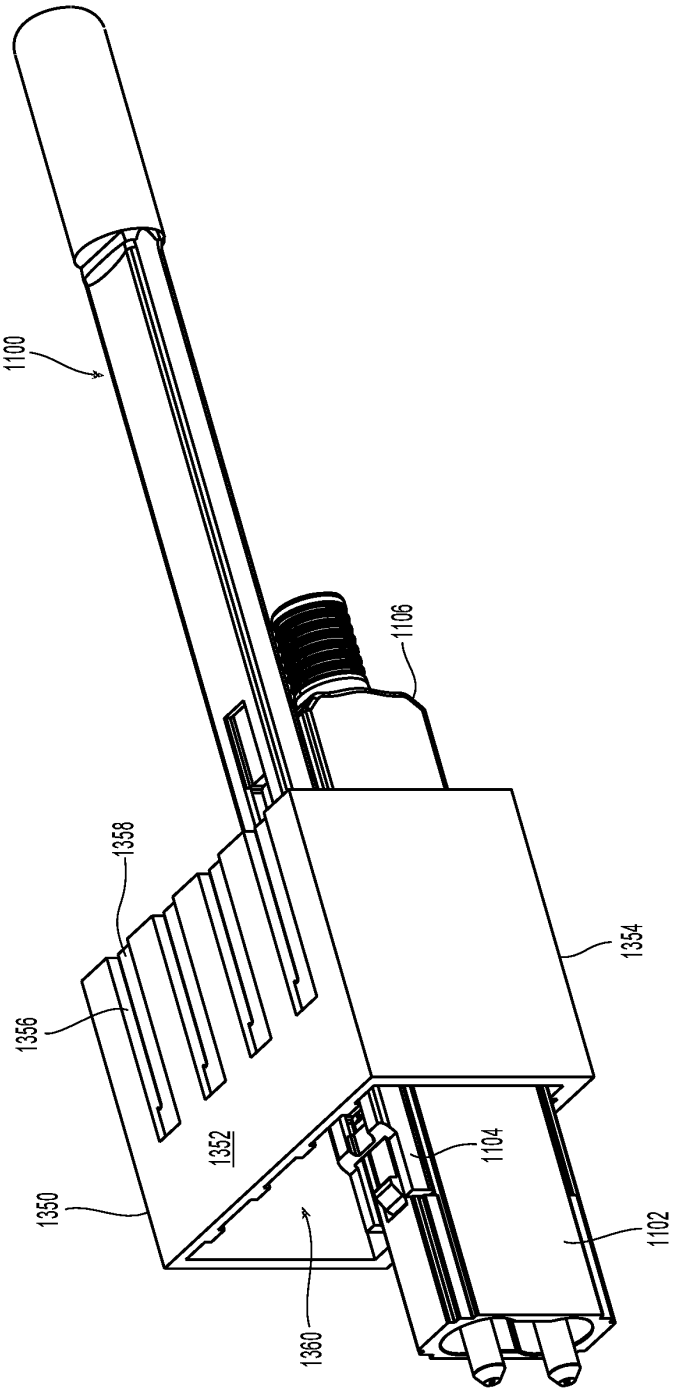

Fig. 31

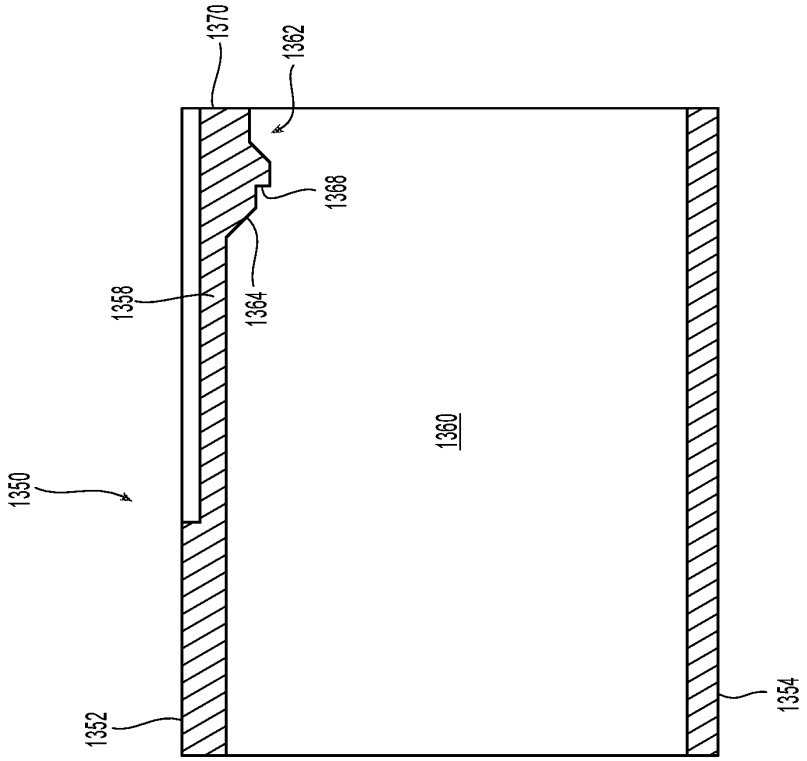

Fig. 32

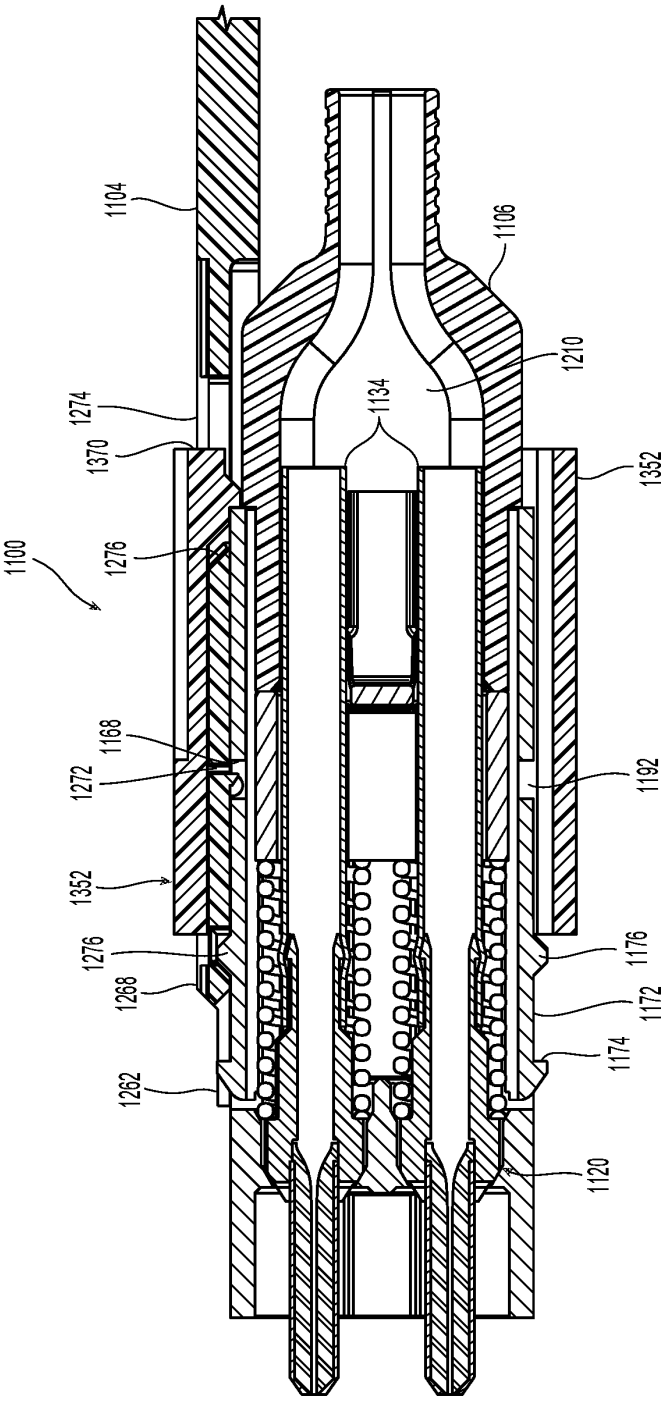
1104
1106
1210
1134
1274
1370
1352
1100
1276
1168
1272
1192
1352
1276
1176
1268
1172
1174
1262
1120

Fig. 33

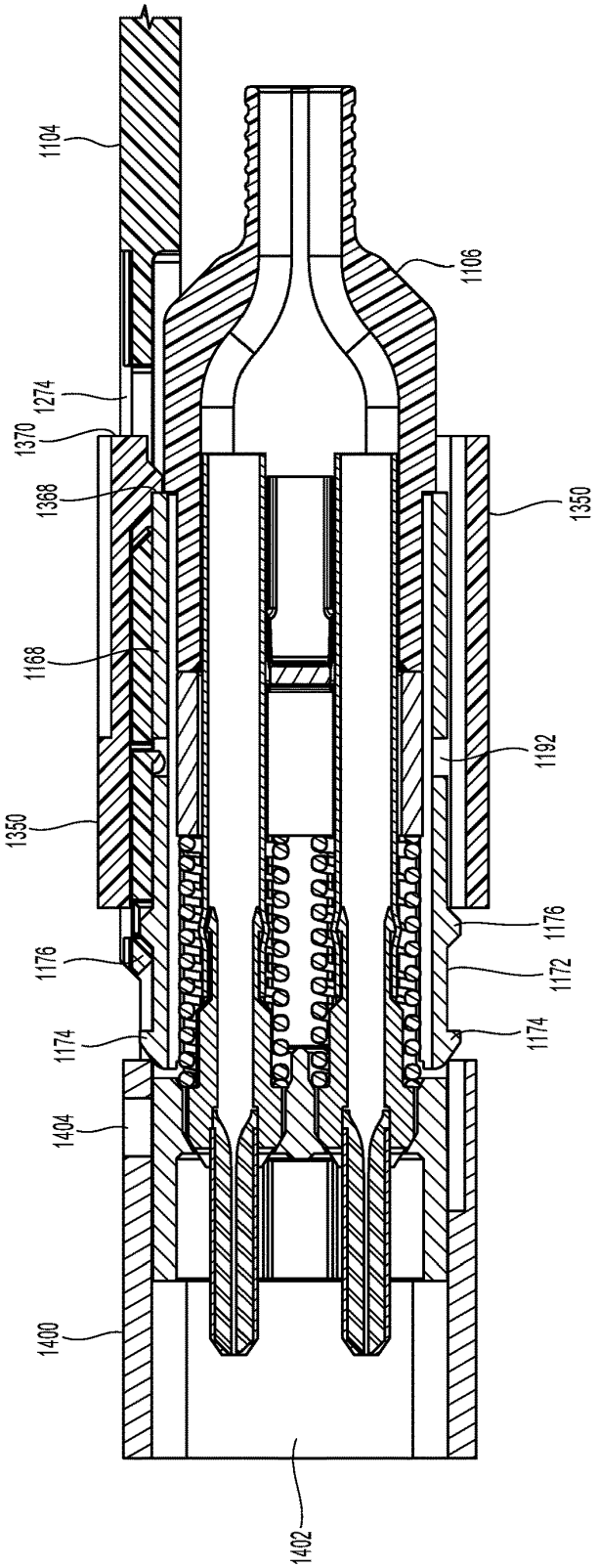
1104
1106
1274
1370
1368
1350
1168
1192
1350
1176
1176
1172
1174
1174
1404
1400
1402

Fig. 34

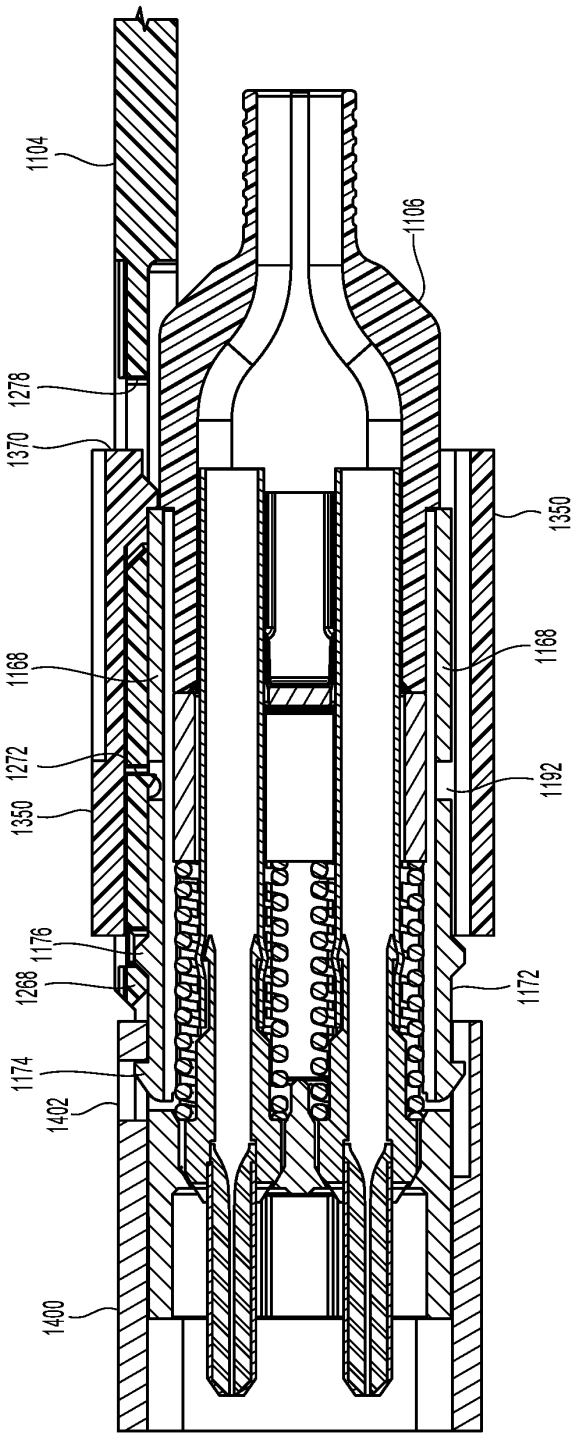
1104
1278
1370
1168
1272
1350
1176
1268
1174
1402
1400
1106
1350
1168
1192
1172

Fig. 35

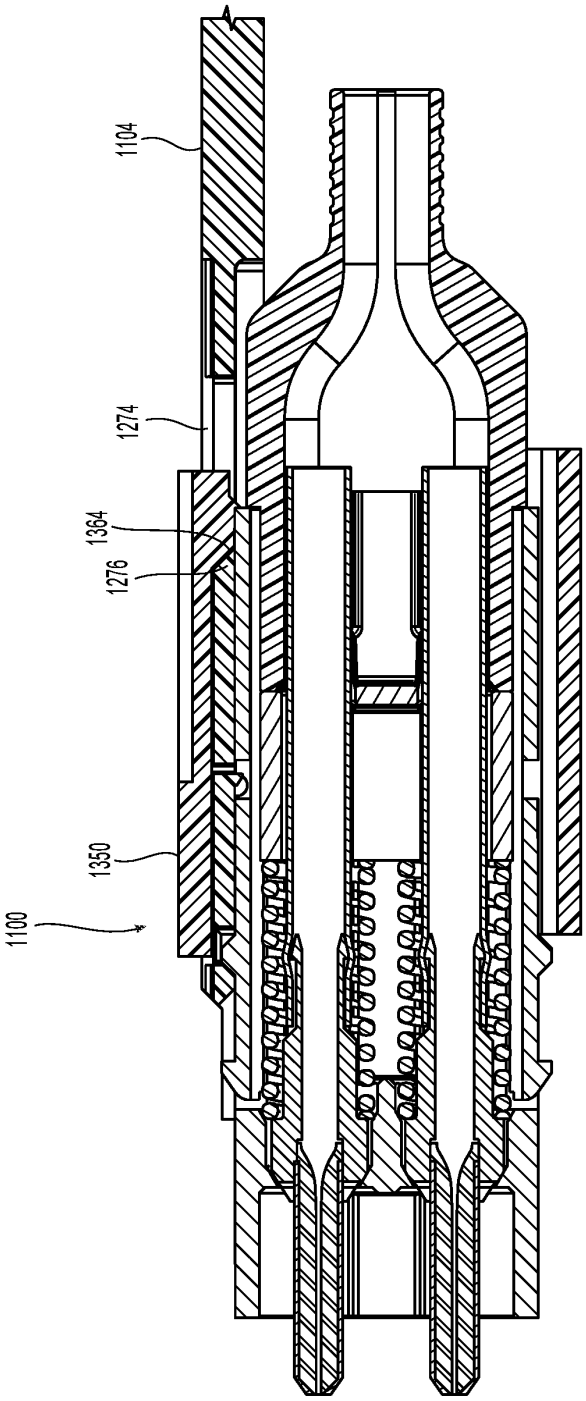

Fig. 36

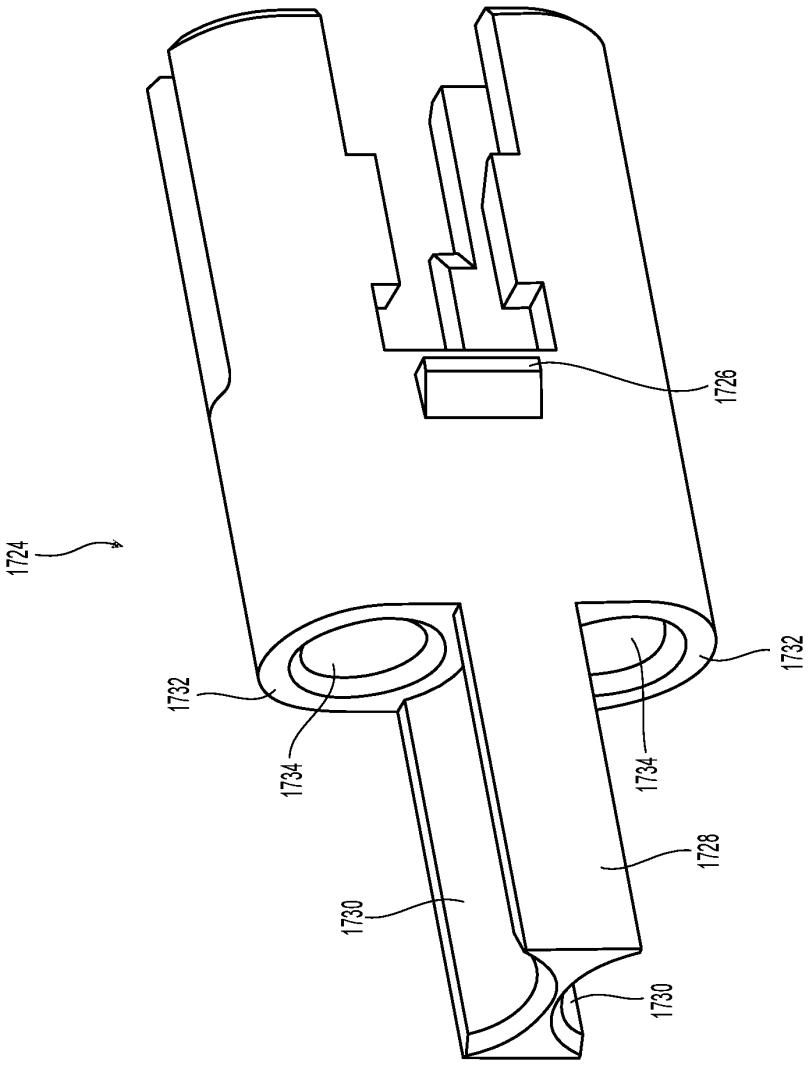

Fig. 37

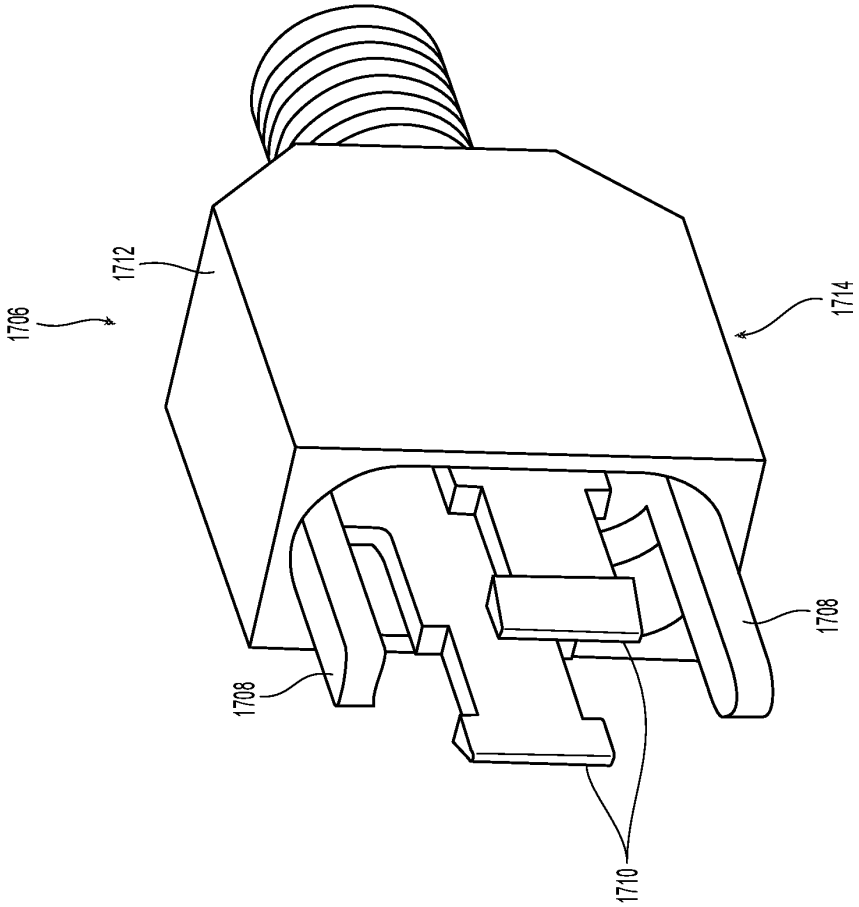

Fig. 38

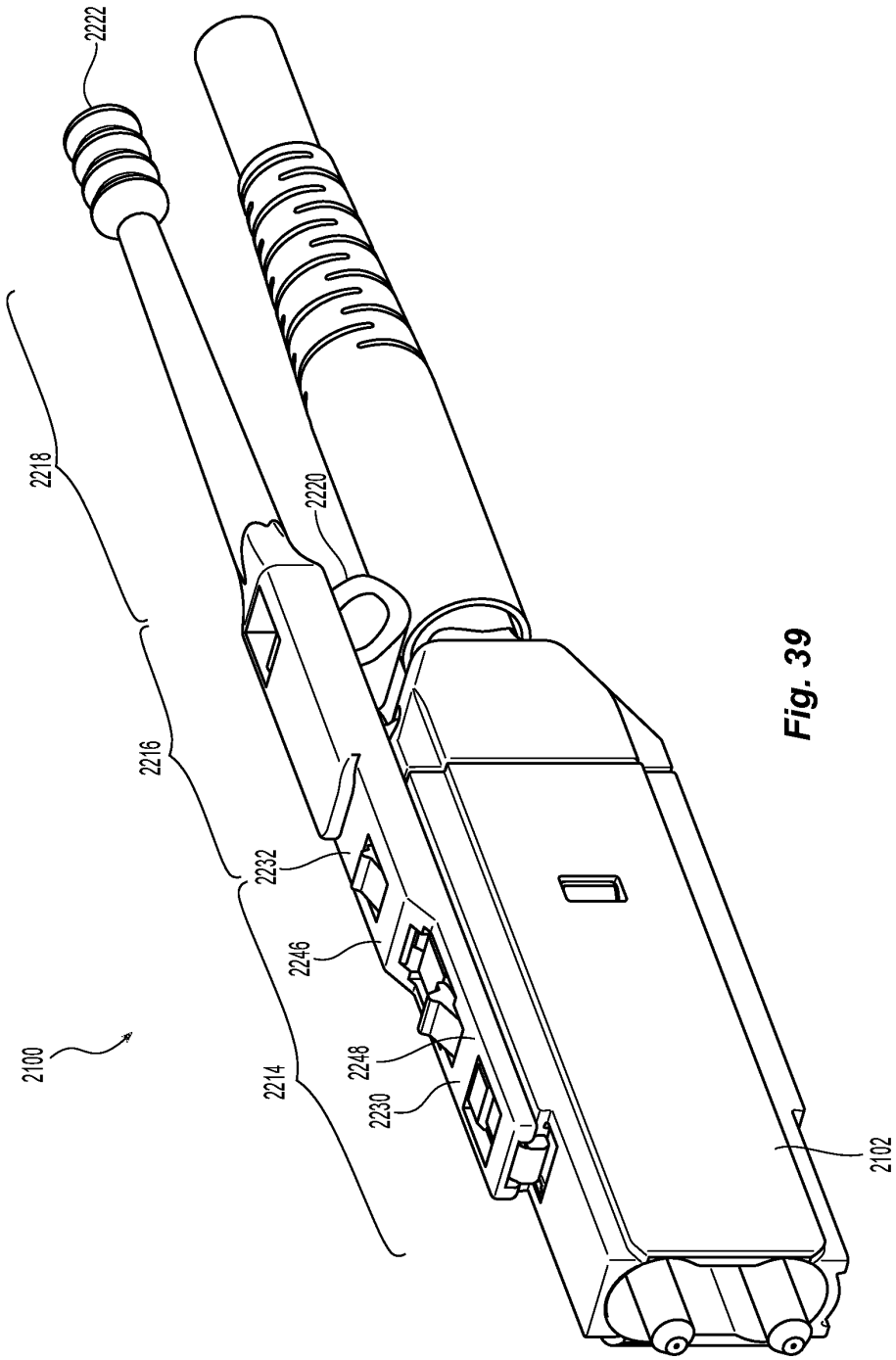

Fig. 39

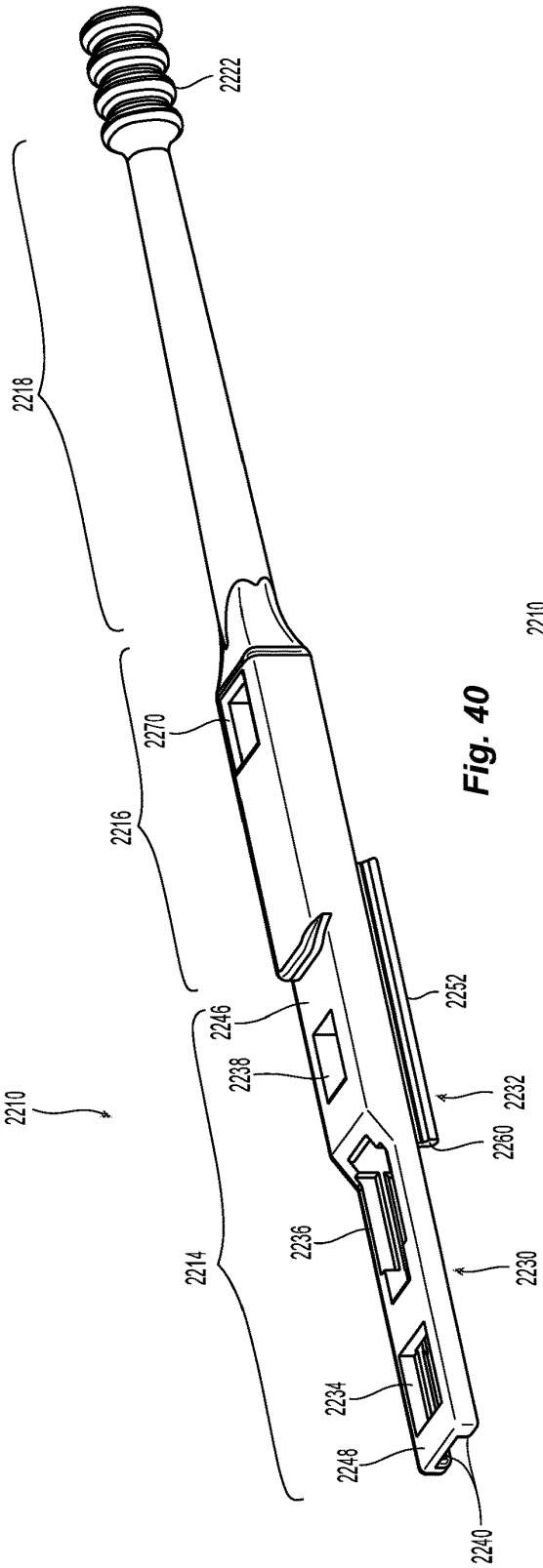
2222
2218
2210
2270
2216
2246
2238
2214
2236
2234
2248
2240
2252
2232
2260
2230

Fig. 40

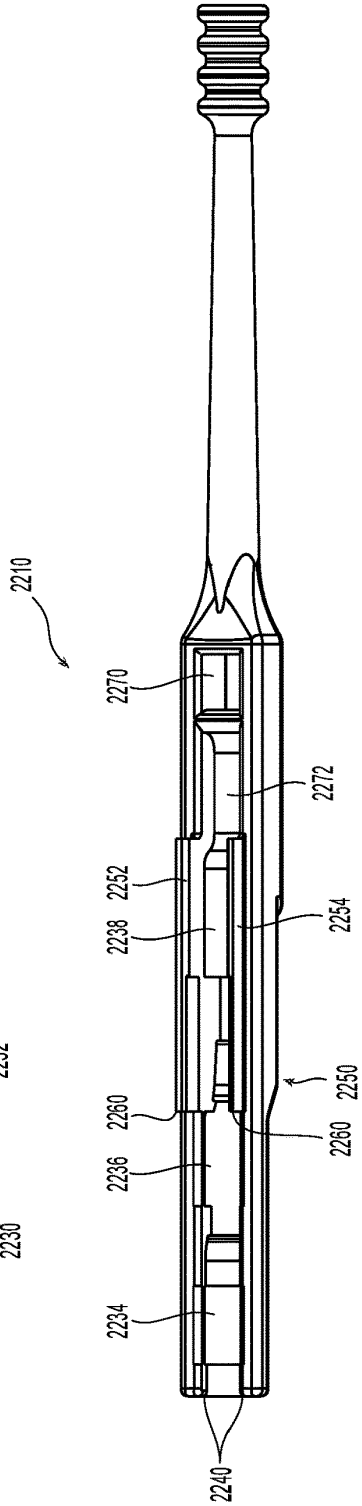
2210
2270
2272
2252
2238
2254
2260
2236
2234
2240
2250
2260

Fig. 41

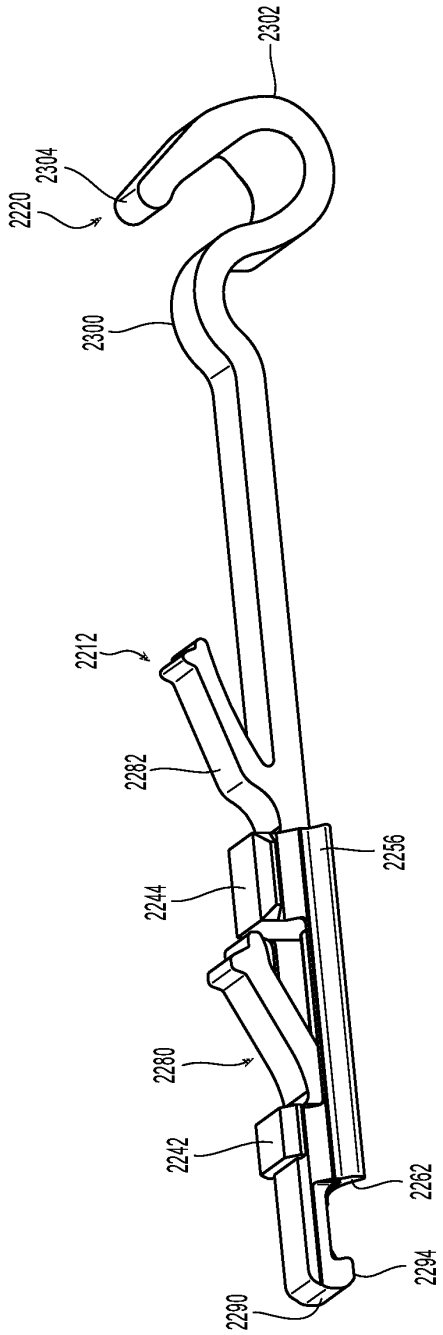
2302
2304
2220
2300
2212
2282
2244
2280
2242
2290
2256
2262
2294

Fig. 42

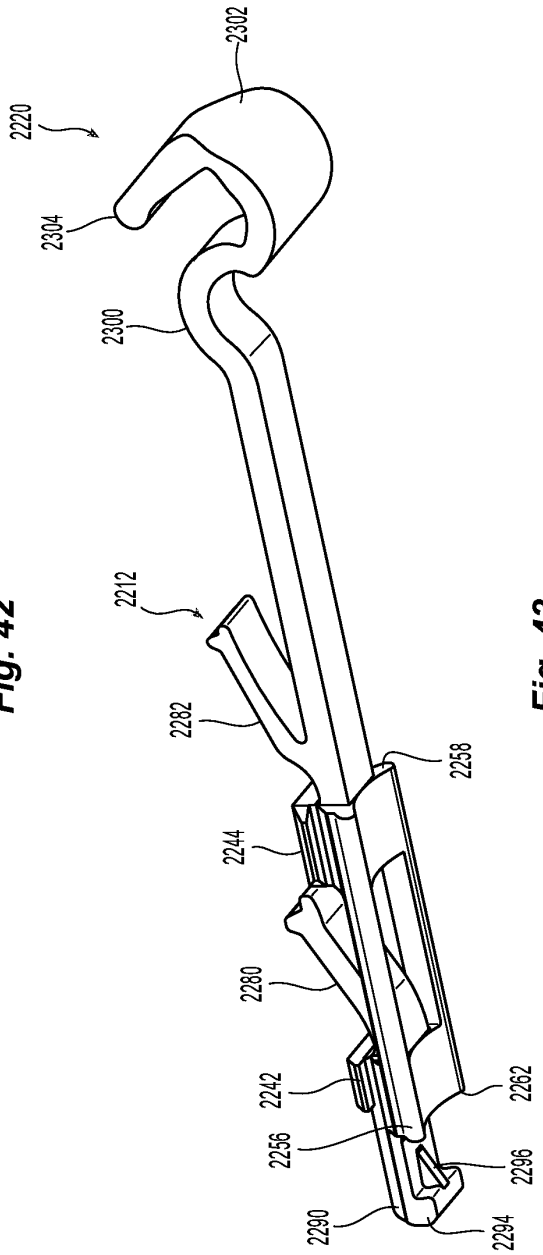
2302
2220
2304
2300
2212
2282
2244
2280
2242
2256
2290
2258
2262
2296
2294

Fig. 43

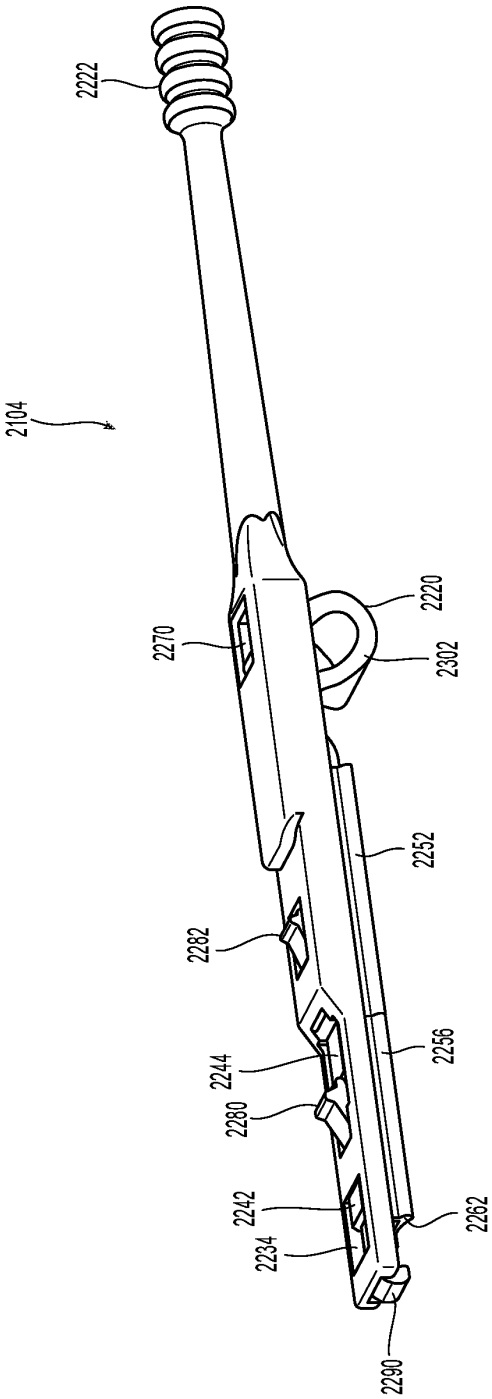
2222
2104
2270
2220
2302
2252
2282
2244
2280
2256
2242
2234
2262
2290

Fig. 44

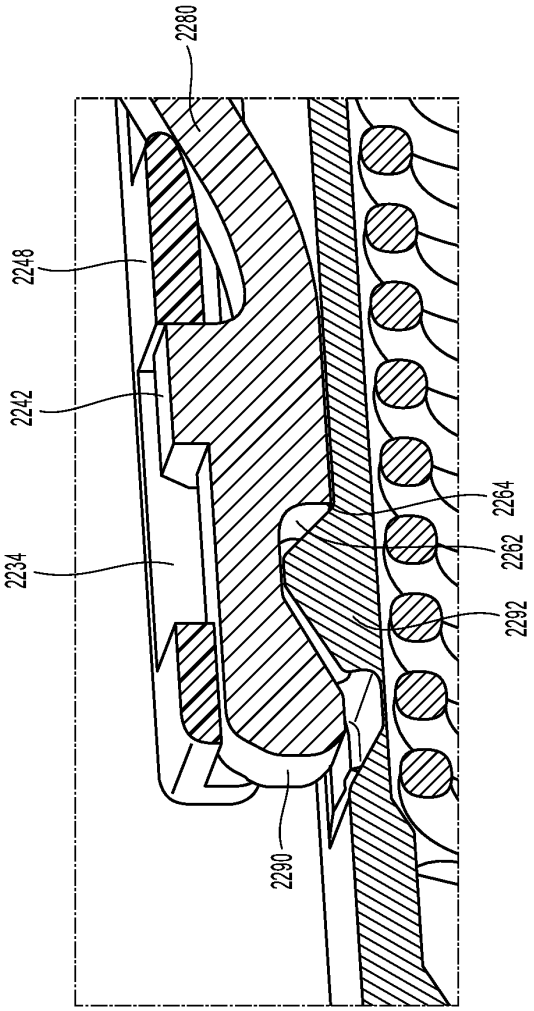

Fig. 45

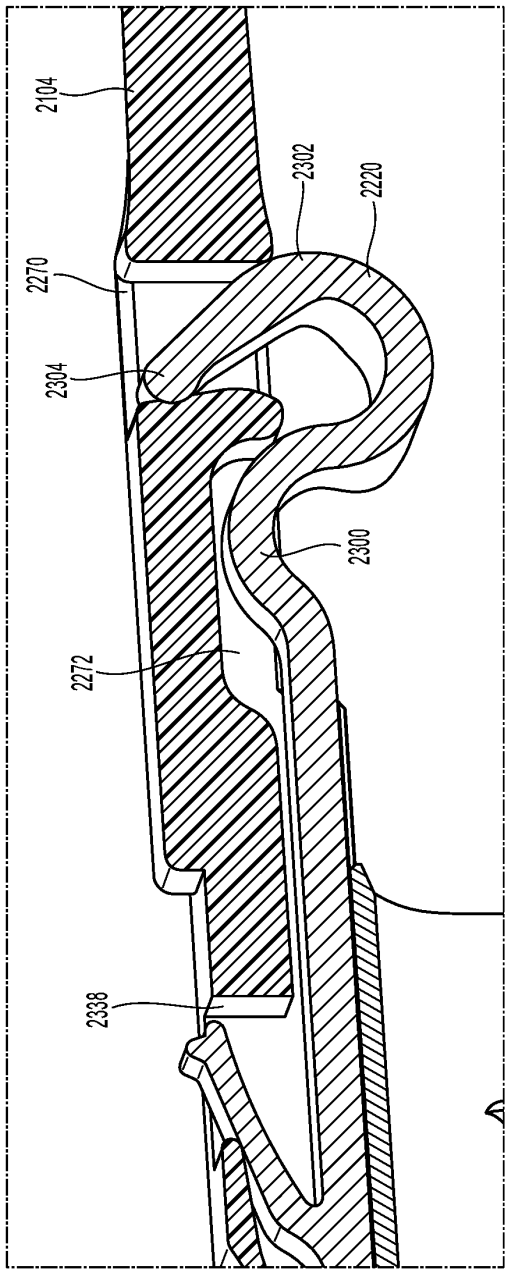

Fig. 46

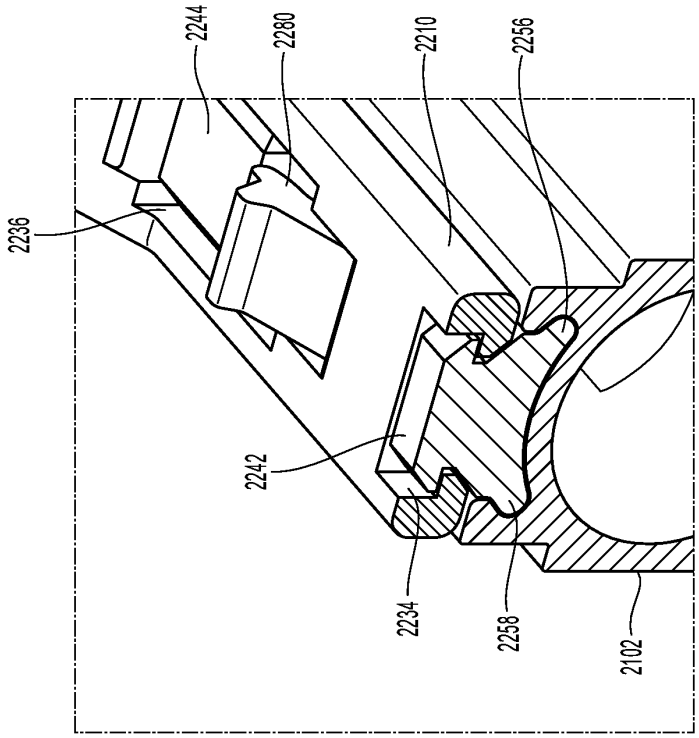

Fig. 47

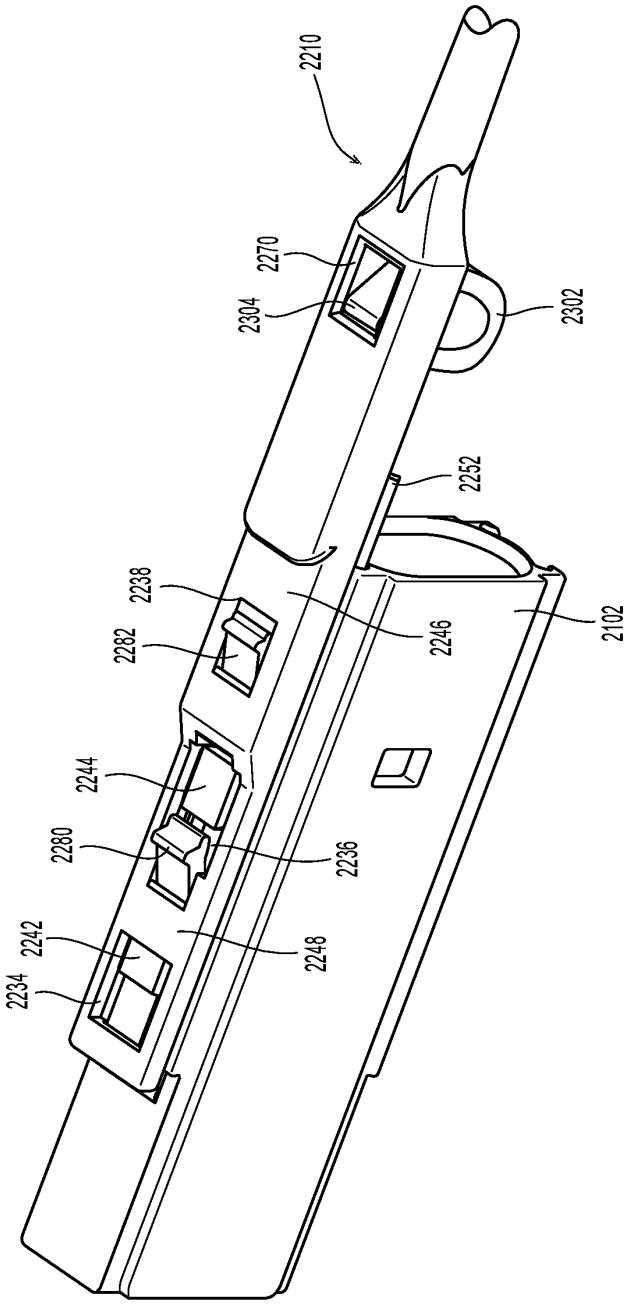
2210
2270
2304
2302
2252
2238
2282
2246
2102
2244
2280
2236
2242
2248
2234

Fig. 48

MINI DUPLEX CONNECTOR WITH PUSH-PULL POLARITY MECHANISM AND CARRIER WITH LATCH AND RAIL

This application claims priority of U.S. Provisional Patent Application Ser. No. 62/607,555, filed on Dec. 19, 2017 and Provisional Patent Application Ser. No. 62/634,271, filed on Feb. 23, 2018, and under 35 U.S.C. § 120 to U.S. Pat. No. 11,016,251, issued on Mar. 25, 2021, the contents of which are incorporated by reference.

BACKGROUND OF THE INVENTION

Field of the Invention

In the small form-factor pluggable (SFP and QSFP) industry, there are a number of different ferrules and designs that are used. In some applications, an MT ferrule is used, while in others it is the LC form that is used. The LC connector uses a single optical fiber and fiber optic ferrule per housing. In higher density applications, the LC connector may not be used because the space that each of the LC connectors use. Thus, it would beneficial to reduce the footprint of the LC connector by reducing the pitch between the fiber optic ferrules.

Applicant has a new design for a fiber optic connector using the LC fiber optic ferrule to reduce the overall footprint of the fiber optic connector. In addition, an insertion/removal tool has been included to allow for the reduced footprint, allowing a user to more easily insert and remove the new fiber optic connectors. The fiber optic connector and the insertion/removal tool may also provide a way to ensure the correct polarity of the fiber optic connector and to even change the polarity in the field.

Finally, the insertion/removal tool may include a way for it to be self-returning after a user inserts/removes the fiber optic connector.

SUMMARY OF THE INVENTION

The present invention is directed to a push-pull mechanism for use with a fiber optic connector having a housing with a top housing surface and a bottom housing surface that includes a main body having a front portion, a middle portion and a rear portion, a latch body connected to the front portion of the main body, the front portion having at least one window to receive at least one latch therethrough from the latch body, the at least one latch for engaging a fiber optic connector adapter, and a rail portion extending along side portions of the latch body and main body to slidably engage the fiber optic connector housing on one of the top housing surface and the bottom housing surface.

In some embodiments, the push-pull mechanism includes a flexure member connected to the latch body to bias the main body toward a front end of the fiber optic connector housing.

In some embodiments, the at least one window comprises two windows and the at least one latch comprises two latches, the second latch extending through the second window and to engage a carrier.

In some embodiments, wherein the location of the rail portion in the fiber optic connector housing thereby determines a polarity of the fiber optic connector.

In another aspect, the invention is directed to a push-pull mechanism for use with a fiber optic connector having a housing with a top housing surface and a bottom housing surface that includes a main body having a front portion, a middle portion and a rear portion, two latches extending outward from the front portion, the first latch for engaging a fiber optic connector adapter and the second latch for engaging a carrier, a rail portion extending along side portions of the main body to slidably engage the fiber optic connector housing on one of the top housing surface and a bottom housing surface, and a grasping portion on the rear portion to allow a user to push and pull the push-pull mechanism to engage and disengage the fiber optic connector from the carrier and the adapter.

In some embodiments, the push-pull mechanism further includes a flexure member connected to the latch body to bias the main body toward a front end of the fiber optic connector housing.

Additional features and advantages of the invention will be set forth in the detailed description which follows, and in part will be readily apparent to those skilled in the art from that description or recognized by practicing the invention as described herein, including the detailed description which follows, the claims, as well as the appended drawings.

It is to be understood that both the foregoing general description and the following detailed description of the present embodiments of the invention, and are intended to provide an overview or framework for understanding the nature and character of the invention as it is claimed. The accompanying drawings are included to provide a further understanding of the invention, and are incorporated into and constitute a part of this specification. The drawings illustrate various embodiments of the invention, and together with the description serve to explain the principles and operations of the invention.

BRIEF DESCRIPTION OF THE DRAWINGS

FIG. **1** is a side elevational view of one embodiment of a fiber optic connector with a push-pull mechanism, crimp body, and boot according to the present invention;

FIG. **2** is an exploded perspective view of the fiber optic connector in FIG. **1**;

FIG. **3** is a perspective view of a portion of the fiber optic connector in FIG. **1**, which includes the housing with two ferrule assemblies and a spring push;

FIG. **3**A is an exploded perspective view of the ferrule assembly and spring in FIG. **3**;

FIG. **4** is a partial cross section of the housing with two assembled ferrule assemblies and the spring push in FIG. **3**;

FIG. **5** is a perspective view of the housing of the fiber optic connector in FIG. **1** and FIG. **3**;

FIG. **6** is a rear elevational view of the housing in FIG. **5**;

FIG. **7** is a perspective view of spring push in FIG. **3**;

FIG. **8** is a front elevational view of the crimp body in FIG. **1**;

FIG. **9** is a partial cut away perspective view of the crimp body in FIG. **8**;

FIG. **10** is a perspective view of the push-pull mechanism of FIG. **1**;

FIG. **10**A is a perspective view of the underside of the push-pull mechanism of FIG. **10**;

FIG. **11** is a perspective view of a latch body used with the push-pull mechanism in FIG. **10**;

FIG. **12** is a front elevational view of the latch body in FIG. **11**;

FIG. **13** is a side elevational view of the latch body in FIG. **11**;

FIG. **14** is a perspective view of the push-pull mechanism and latch body illustrating how the latch body attaches to the push-pull mechanism;

FIG. **15** is a partial, perspective view of the push-pull mechanism and latch body in FIG. **14**;

FIG. **16** is a top view of the push-pull mechanism in FIG. **14** attached to the fiber optic connector in FIG. **1**;

FIG. **17** is an enlarged view of the connection of the push-pull mechanism and housing in FIG. **16**;

FIG. **18** is a front perspective view of a plurality of fiber optic connectors and push-pull mechanisms mounted in a carrier according to one embodiment of the present invention;

FIG. **19** is a front view of the plurality of fiber optic connectors and push-pull mechanisms mounted in the carrier in FIG. **18**;

FIG. **20** is a rear perspective view of the plurality of fiber optic connectors and push-pull mechanisms mounted in the carrier in FIG. **18** in preparation to be inserted into one embodiment of a fiber optic connector adapter according to the present invention;

FIG. **21** is a cross section of the assembly of the push-pull mechanism and latch body and the fiber optic connector, all mounted in the carrier and inserted into the adapter;

FIG. **22** is a cross section of a smaller portion of the assembly shown in FIG. **21** illustrating push-pull mechanism and latch body mounted in the carrier and the fiber optic connector adapter;

FIG. **23** is an elevational view of a second embodiment of a fiber optic connector with a push-pull mechanism, crimp body, and boot according to the present invention;

FIG. **24** is a partial cross sectional view of the housing with the wo ferrule assemblies and a spring push of the fiber optic connector in FIG. **23**;

FIG. **25** is a perspective view of the housing of the fiber optic connector in FIG. **23**;

FIG. **26** is a rear elevational view of the housing in FIG. **25**;

FIG. **27** is partial cross section of a second embodiment of a crimp body according to the present invention and shown in FIG. **23**;

FIG. **28** is a perspective view of the second embodiment of a push-pull mechanism according to the present invention and shown in FIG. **23**;

FIG. **29** is a cross section view of the push-pull mechanism in FIG. **27**;

FIG. **30** is cross section of the fiber optic connector with a push-pull mechanism and crimp body of FIG. **23**;

FIG. **31** is a perspective view of a fiber optic connector and push-pull mechanisms of FIG. **23** mounted in a carrier;

FIG. **32** is a cross section view of the carrier of FIG. **30** without the fiber optic connector;

FIG. **33** is a cross section view of the fiber optic connector with a push-pull mechanism and crimp body of FIG. **23** in an embodiment of a carrier;

FIG. **34** is a cross section view of fiber optic connector with a push-pull mechanism and crimp body in a carrier being inserted into an adapter;

FIG. **35** a cross section view of fiber optic connector with a push-pull mechanism and crimp body in a carrier being removed from the adapter;

FIG. **36** is a cross section view of fiber optic connector with a push-pull mechanism and crimp body being removed from a carrier;

FIG. **37** is a perspective view of a second embodiment of a spring push according to the present invention;

FIG. **38** is a perspective view of a second embodiment of a crimp body according to the present invention;

FIG. **39** is an elevational view of another embodiment of a fiber optic connector with a push-pull mechanism, crimp body, and boot according to the present invention;

FIG. **40** is a right top perspective view of the push-pull mechanism of FIG. **39**;

FIG. **41** is a bottom perspective view of the push-pull mechanism of FIG. **39**;

FIG. **42** is a right perspective view of the latch body with a flexure mechanism of FIG. **39**;

FIG. **43** is a right bottom perspective view of the latch body and flexure mechanism of FIG. **39**

FIG. **44** is a right perspective view of the push-pull mechanism with latch body and flexure mechanism;

FIG. **45** is an enlarged cross sectional view of a portion of the push-pull mechanism, latch body, and fiber optic connector of FIG. **39**;

FIG. **46** is enlarged cross sectional view of a portion of the push-pull mechanism, latch body, and fiber optic connector of FIG. **41** at a different location from FIG. **47**;

FIG. **47** is a cross sectional view of the push-pull mechanism, latch body, and housing; and

FIG. **48** is a top perspective view of the push-pull mechanism, latch body, and housing.

DETAILED DESCRIPTION OF THE PREFERRED EMBODIMENTS

Reference will now be made in detail to the present preferred embodiment(s) of the invention, examples of which are illustrated in the accompanying drawings. Whenever possible, the same reference numerals will be used throughout the drawings to refer to the same or like parts.

Applicant notes that the term "front" or "forward" means that direction where the fiber optic connector would meet with another fiber optic connector or device, while the term "rear" or "rearward" is used to mean the direction from which the optical fibers enter into the fiber-optic ferrule or fiber optic connector. Thus, "front" is that part of the housing **102** on the left side of FIG. **1** and "forward" is out and to the left. "Rear" is that part of the housing **102** that is on the right side of the page and "rearward" is toward the right.

One embodiment of a fiber optic connector **100** according to the present invention is illustrated in FIGS. **1-22**. The fiber optic connector **100**, in FIGS. **1** and **2**, may include a housing **102**, a latch component (push-pull mechanism) **104**, a crimp body **106**, a crimp ring and heat shrink tube **108**, and a strain relief boot **110**. As discussed in more detail below, the housing **102** and its components, the latch component **104**, and the crimp body **106** are the focus of this application. The crimp ring and heat shrink tube **108** and a strain relief boot **110** are generally known components.

Turning to FIGS. **3** and **3**A, inside the housing **102** are two ferrule assemblies **120**, two springs **122**, and a spring push **124**. The two ferrule assemblies **120** each include a fiber optic ferrule **130** (generally a 1.25 mm LC fiber optic ferrule), a ferrule holder **132**, and a lead-in tube **134**. The spring **122** is added later. The ferrule assemblies **120** are preferably preassembled and are inserted into the housing **102** without needing any further processing.

The housing **102** has a main body **140** extending between a front end **142** and a rear end **144**, and has an opening **146** extending therebetween. The opening **146** of the housing **102** may also have structures **148** that orient and retain the ferrule assemblies **120** in the housing **102**. In this case, there are flat surfaces **150** that engage corresponding flat surfaces **152** on the ferrule holder **132**, to keep the ferrule assemblies **120** from rotating within the housing **102**.

Once the ferrule assemblies **120** are disposed within the housing **102**, the springs **122** are placed around the lead-in tube **134** and against a back end **138** of the ferrule holder **132**. The spring push **124** is then inserted into the opening **146** of the housing **102**. The spring push **124** has a pair of latches **154** that engage corresponding openings **156** in the opposite sides of the main body **140** of the housing **102** to retain the spring push **124** in the opening **146**. The spring push **124** has a forward facing surface **158** to engage the rear ends of the springs **122**. The forward facing surface **158** generally corresponds to the two springs **122** to ensure that that the spring push **124** stays engaged with the springs **122**. This configuration biases the ferrule assemblies **120** toward the front end **142** of the housing **102**. While not shown, two optical fibers enter into the ferrule assemblies **120** through the spring push **124** and into the lead-in tubes **134**.

The lead-in tubes **134** are connected to and extend from the ferrule holder **132**. Preferably, the lead-in tubes **134** are secured to the ferrule holder **132**, e.g. by adhesives, press-fit. The lead-in tubes **134** also extend beyond the rear end of the ferrule holder **132**. See FIG. **4**. This allows for injection of epoxy or other adhesives into the ferrule assemblies **120** through the lead-in tubes **134** to secure the optical fibers therein. With the lead-in tubes **134** extending so far rearwardly, there is no concern that the epoxy or adhesives will interfere with the springs **134**, the spring push **124**, or other structures in the fiber optic connector **100**. Typically, the adhesive is cured with the lead-in tubes **134** exposed in prior to adding any additional components.

The housing **102** may also have an indicia **136** of the polarity of the fiber optic connector **100**. See FIG. **5**. Depending on the application, one of the ferrule assemblies **120** may be a receiving or a transmitting side with the other of the ferrule assemblies **120** being the other. It is important for the user or technician to know which of the ferrule assemblies **120** is which. The indicia **136**, an indentation in this case, makes the orientation or the polarity of the fiber optic connector **100** clearly visible. Other types of indicia may be used and still fall within the scope of the present invention.

The outside of the housing **102** has many features that are integral to its use. See FIGS. **5** and **6**. First are the top surface **160** and the bottom surface **162**. The top and bottom surfaces **160**,**162** are preferably the same, with the exception of the indicia **136**, as one of the two surfaces **160**,**162** would not have it. Extending from the rear end **144** towards the front **142** of the housing **140** on both the top surface **160** and the bottom surface **162** is a rail receiving portion **164**. As will be discussed in more detail below, the rail receiving portion **164** will stop just before the front end **142** as it will therefore create a stop surface **166**. The latch component (push-pull mechanism) **104** will make use of the stop surface **166** to insert the fiber optic connector **100** into various structures.

The rail receiving portion **164** has a central portion **168** and then two lobe sections **170**, one lobe on each side of the central portion **168**. As best seen in FIG. **6**, the rail receiving portion **164** looks like part of a profile of a dog bone. This configuration matches that of the bottom surface of the latch component (push-pull mechanism) **104** to form a sliding dove-tail configuration. Other configurations are possible, such as, for example, the second version illustrated below—a cap with undercuts (essentially an umbrella or a T-shape configuration). See FIG. **26**.

The next feature of the housing **102** and main body **140** are the two side surfaces **180**. The two side surfaces **180** are those opposite to one another and separated by the top surface **160** and the bottom surface **162**. Referring to FIG. **6** in particular, each of the sides **180** are divided into three portions. The first portion is a longitudinal central portion **182** extending in a first plane A. The second portion is a longitudinal top portion **184** extending in a second plane B, the first plane A is parallel to and offset from the second plane B. The third portion is a longitudinal bottom portion **186** extending in the second plane B. The longitudinal top portion **184** preferably is divided from the longitudinal central portion **182** by a shoulder **188**. The shoulder **188** preferably has a surface that is in plane C and is perpendicular to both planes A and B. Similarly, the longitudinal bottom portion **186** preferably is divided from the longitudinal central portion **182** by a shoulder **190**. The shoulder **190** preferably has a surface that is in plane D and is perpendicular to both planes A and B.

The two longitudinal top portions **184** and the two longitudinal bottom portions **186** function to align the fiber optic connector **100** in a horizontal direction in various structures, e.g., a carrier and an adapter. On the other hand, it is the shoulders **188**,**190** that align the fiber optic connector **100** in a vertical direction. These will be discussed in more detail below. See also FIGS. **19** and **20**.

Referring to FIG. **5**, there are also two indentations **192** in the longitudinal top portion **184** on both sides of the main body and adjacent the rear end **144**. The indentations **192** form a forward facing surfaces **194** that are used by two housing latches in the latch component (push-pull mechanism) **104**. As described more later, the latch component (push-pull mechanism) **104** engages the forward facing surfaces **194** when removing the fiber optic connector **100**.

Returning to the crimp body **106**, it is illustrated in FIG. **1** and also in FIGS. **8** and **9**. The crimp body **106** has a front portion **200** that is designed to interact and connect with the spring push **124** and also is disposed within the opening **146** of the housing **102** when installed. The crimp body **106** has a rear portion **202** that extends behind the housing **102** and provides an outer surface **204** to receive a crimp band (e.g., crimp ring and heat shrink tube **108**) therearound. Extending from a front end **206** to the rear end **208** is an opening **210**. The opening **210** at the front portion **200** receives at least a portion of each of the lead-in tubes **134**. The spring push **124** has two tabs **212** on opposites sides thereof and extend in a rear ward direction in the opening **210** to engage an opening **214** in side walls **216** of the crimp body **106**. The front end **206** also has a forward facing surface **218** that complements the rear of the spring push and, together with the tabs **212** keeps the crimp body **106** securely fixed to fiber optic connector **100**. Although the crimp body **106** is illustrated as being attached to the spring push **124**, alternatively the crimp body **106** could be attached to the housing **102**.

The opening **210** in the crimp body **106** rearwardly of the lead-in tubes provides a transition portion **220** for the optical fibers that are secured in the fiber optic ferrules **130**. Since the crimp body **106** has a singular opening **222** at the rear end thereof, the optical fibers need to be able to exit that singular opening **222** in a smooth fashion so they are not bent beyond their bend radius, thereby damaging or breaking the optical fibers. The transition portion **220** provides for this function.

The crimp body **106** also has a top surface **230** and the bottom surface **232**. The top surface **230** and the bottom surface **232** may be configured with a central portion **234** that is similar to the central portion **168** of the rail receiving portion **164** above. However, the crimp body **106** has two outer trough portions **236** that are open to the space above the crimp body **106**. The central portion **234** and the two outer trough portions **236** function as an alignment feature of

the rail receiving portion **164**. As discussed more below, the latch component (push-pull mechanism) **104** can be better aligned with the rail receiving portion **164** by using the central portion **234** and the two outer trough portions **236** on the crimp body **106**.

While the crimp body **106** is illustrated as a single, unitary body (i.e., molded at one time with one material), it could also be molded as two pieces and then later the two pieces secured to one another.

The latch component (push-pull mechanism) **104** is illustrated in more detail in FIGS. **10-17**. The latch component (push-pull mechanism) **104** has a main body **250** and a latch body **252** that attaches to the main body **250**. See FIGS. **10** and **11-13**. The main body **250** has a front portion **254**, a middle portion **256**, and a rear portion **258**. Generally, the front portion **254** is where the latch body **252** attaches to the main body **250** and provides for the latching of the fiber optic connector **100** to the adapter and carrier. The middle portion **256** provides for latching of latch component (push-pull mechanism) **104** to the housing **102**. The rear portion **258** has a grasping portion **260** to allow a user to push and pull the latch component (push-pull mechanism) **104** to engage and disengage the fiber optic connector **100** and the latch component (push-pull mechanism) **104** from the adapter and/or carrier.

The front portion **254** is divided into a first front portion **262** and a second front portion **264**. The first front portion **262** and the second front portion **264** both have a window **266**, **268**, respectively to receive a latch from the latch body **252** therethrough. An underside of the first portion **262** has a groove **270** on either side to receive attachment members **272**, **274** from the latch body **252** (see FIGS. **10**A and **11**) to secure the latch body **252** to the main body **250**. The attachment members **272**, **274** (and thus the latch body **252**) are able to slide within the grooves **270** to allow for the latching and unlatching the fiber optic connector **100**. The grooves **270** should extend the length of the first portion **254**.

The second front portion **264** has an upper surface **276** that is higher than an upper surface **278** of the first front portion **262**. This allows for the latching of a carrier and an adapter with the same device, as noted in more detail below. On the bottom side **280** of the second front portion **264** is a rail portion **282** that includes two extensions **284**, **286** that are joined by a central portion **288**, all having a complementary configuration of the rail receiving portion **164** of the housing **102**. See FIG. **10**A. The latch body **252** also has the same rail portion configuration (central portion **290** and two extensions **292**, **294**) on the bottom thereof. This allows the main body **250** and the latch body **252** to be slidingly attached to the rail receiving portion **164** of housing **102**. When the latch body **252** is inserted into the first front portion **262**, a front surface **296** of the rail portion **282** provides a pushing surface by which the main body **250** can push the latch body **252** in the rail receiving portion **164** of the housing **102**. See also FIG. **21**. The front surface **300** of the latch body **252** also provides a pushing surface to be used against the stop surface **166** of the housing **102**. This allows for the user to exert a force on the latch component (push-pull mechanism) **104** which is transferred through the main body **250** to the latch body **252** and to the housing **102** to insert the fiber optic connector **100** into a carrier and/or adapter.

Returning to FIGS. **11-13**, the latch body **252** has two latches, an adapter latch **310** and a carrier latch **312**. The latch body may only have one of the latches, depending upon its uses and the needs of the user. The adapter latch **310** extends from a forward portion of the latch body **252** and protrudes through window **266** of the main body **250**. The carrier latch **312** also extends from the latch body **252**, from a rear portion thereof, and protrudes through the window **268** of the main body **250**. As is recognized from FIG. **13**, the adapter latch **310** does not rise as high as the carrier latch **312** (plane E versus plane F) so that when the fiber optic connector **100** is inserted into or removed from a carrier, the adapter latch **310** will not engage the carrier.

Each of the latches, adapter latch **310** and a carrier latch **312**, each have a proximal end **314**, **316**, to engage an adapter and a carrier, respectively. Each of the proximal ends, **314**, **316**, have a rearward facing surface **314***a*, **316***a* and an upward facing surface, **314***b*,**316***b*. The proximal ends **314**, **316** will engage an opening in an adapter or a carrier. See, e.g., FIG. **21**.

The latch component (push-pull mechanism) **104** is removably connected to the rail receiving portion **164** of the housing **102** as described above. However, the connections so far described do not prevent the latch component (push-pull mechanism) **104** from being removed toward the rear of the housing **102** when, for example, the grasping portion **260** is pulled rearwardly. However, in the middle portion **256**, there are two latches **320** that extend from the latch component (push-pull mechanism) **104** inward and will move along rear portions of the longitudinal top portions **184** on each side of the housing **102**. See FIGS. **1**, **18**, and **20**. In particular, the housing **102** has indentations **192** for the latches **320** and will engage the forward facing surfaces **194** when the latch component (push-pull mechanism) **104** is pulled rearwardly. This will allow for the user to remove the fiber optic connector **100** from a carrier and/or adapter as will now be described. It should be noted that the latches **320** are cantilevered latches and thus pushing on area **322** (see FIGS. **16** and **17**) will cause the latches to move away from the housing **102**, and will release the housing **102** from the latch component (push-pull mechanism) **104**.

Turning to FIGS. **1**, **14**, **15**, and **18**, the latch component (push-pull mechanism) **104** is connected to the fiber optic connector **100**. The fiber optic connector **100** can be inserted into a carrier **350** (FIG. **18**) and/or an adapter **400** (FIG. **20**). The carrier **350** provides the user with a convenient way to insert into and remove **4** fiber optic connectors **100** (could also have more or fewer connectors, but usually in groups of two) from an adapter (or other telecommunications structure) rather than one at a time. It provides a cost savings time wise and also assists in preventing the stubbing of or breaking fiber optic connectors.

The carrier **350** has a few features that enable the use of the carrier **350** to correctly orient the fiber optic connectors **100** (polarity) and also to align the fiber optic connectors **100** to one another for insertion into the adapter. The carrier **350** has a top **352** and a bottom **354** and the top **352** has a cut out **356** for each of the fiber optic connectors **100**, or the latch component (push-pull mechanism) **104**. If the fiber optic connector **100** is inserted into the carrier **350** incorrectly (wrong polarity) then the fiber optic connector **100** will not seat in the carrier **350** correctly. The cut out **356** also has a rearward facing surface **358** that is used to remove all of the fiber optic connectors **100** from an adapter as discussed in more detail below.

The carrier **350** has an opening **360** extending between the front end **362** and the rear end **364**. Inside the opening **360** are projections to accurately orient the fiber optic connectors **100** in the carrier **350**. Extending from the top **352** into the opening **360** are the top extensions **366***a*. Along the corner of the top and the sides of the carrier **350** are partial top extensions **366***b*, which perform the same function as top

extensions **366***a*. Similarly, there are bottom extensions **368***a* and partial bottom extensions **368***b*. As best seen in FIG. **19**, the top extensions **366***a* are longer and extend down into the opening **360** farther than the bottom extensions **368***a* extend upward into the opening **360**. The distance between corresponding top and bottom extensions **366***a*, **368***a* provide the vertical alignment of the fiber optic connector **100** within the carrier **350**. Referring back to FIG. **6**, the shoulders **188** and **190** and, more particularly, the distance between them and their vertical location along the sides **180** of the housing **102** orients the fiber optic connectors **100** vertically within the carrier **350**. As can be gleamed from FIG. **19**, if one of the fiber optic connectors **100** is oriented incorrectly, the longitudinal top portions **184** and the two longitudinal bottom portions **186** will be in the incorrect location and the latch component (push-pull mechanism) **104** will hit the carrier and prevent the fiber optic connector **100** from being fully inserted.

The horizontal alignment of the fiber optic connectors **100** is also controlled by the top extensions **366***a* and the bottom extensions **370**. However, it is the longitudinal top portions **184** and the two longitudinal bottom portions **186** (the distance therebetween) engaging the top extensions **366***a* and the bottom extensions **370** that controls. FIG. **19** also shows that there is very limited space between the fiber optic connectors **100** and allows for a higher density of fiber optic connectors **100**.

Once the fiber optic connectors **100** with the latch component (push-pull mechanism) **104** are correctly inserted into the carrier **350**, a latch stop **380** on the latch component (push-pull mechanism) **104** will engage the rearward facing surface **358** of the carrier **350**. The carrier **350** is captured between the latch stop **380** and rearward facing surface **316***a* of carrier latch **312**. This will expose enough of the latch component (push-pull mechanism) **104** and, in particular, the first front portion **262**. At the same time, the top 352 of the carrier **350** has windows **370** to receive the carrier latch **312** from each latch body **252**, and in particular the proximal end **316**. See FIGS. **21** and **22**. However, as the fiber optic connector **100** passes into the and through carrier **350**, the adapter latch **310** is too short to engage the carrier **350**.

With the carrier latch **312** now in the window **370** and engaging surface **372** created by the window **370**, the carrier **350** or the latch component (push-pull mechanism) **104** can be used to insert the fiber optic connectors **100** into the adapter **400**. As clear from FIGS. **21** and **22**, if the carrier **350** is used to insert the ganged fiber optic connectors **100** (in the carrier **350** in FIG. **20**), then the carrier **350** will push on the carrier latch **312**, which is on the latch body **252** and has front surface **300** of the latch body **252**, which then pushes against the stop surface **166** of the housing **102** to secure the ganged fiber optic connectors **100**. Thus, all of the fiber optic connectors **100** will be pushed simultaneously into the adapter. On the other hand, one could also used the latch component (push-pull mechanism) **104** to insert them as well.

As the ganged fiber optic connectors **100** are inserted into the adapter **400**, each of the adapter latches **310** will pop up into a respective window **402**. With the adapter latch **310** now in the window **402** and engaging surface **404** created by the window **402**, the ganged fiber optic connectors **100** are secured within the adapter **400**. The adapter **400** has the same projections to accurately orient the fiber optic connectors **100** in the adapter **400**. Thus, applicant will not repeat the same structures here.

The fiber optic connectors **100** can be removed from the adapter **400** one at a time or all at the same time with the carrier **350**. To remove one fiber optic connector **100** from the adapter **400** (if only in the adapter) or the adapter **400** and the carrier **350**, one only need to pull on the grasping portion **260** of the latch component (push-pull mechanism) **104**. As the latch component (push-pull mechanism) **104** is pulled backward, it moves rearward relative to the latch body **252** (because the adapter latch **310** and the carrier latch **312** are against the engaging surfaces **372**, **404**, respectively) and the portions forward of the windows **266**, **268**, will move over the adapter latch **310** and a carrier latch **312**, pushing them down and out of the windows **370**, **402**. Continued pulling on the grasping portion **260** of the latch component (push-pull mechanism) **104** causes the latches **320** to engage the forward facing surfaces **194** of the housing **102** and the whole fiber optic connector can be removed.

If the ganged fiber optic connectors **100** are to be removed together and only from the adapter **400**, then the user will pull on the carrier **350** (while the adapter **400** remains fixed relative thereto). The carrier **350** and, in particular, the rearward facing surface **358** will engage latch stop **380** on the latch component (push-pull mechanism) **104** of each of the fiber optic connectors **100**. As noted above, the portions forward of the windows **266**, **268**, will move over the adapter latch **310** (and carrier latch **312**, but the carrier **350** will retain the fiber optic connectors **100**), pushing them down and out of the windows **370**, **402**. Continued pulling on the carrier causes the latches **320** to engage the forward facing surfaces **194** of the housing **102** and all of the ganged fiber optic connectors **100** can be removed from the adapter **400**. The fiber optic connector **100** can be inserted into and removed the same adapter **400** without a carrier **350** present. A partially populated carrier in the adapter can how a single fiber optic connectors removed for install, while the carrier will stay connected to the fiber optic connectors that remain in the adapter. When the last fiber-optic connector is removed is from the adapter, it will bring the carrier with it.

A second embodiment of a fiber optic connector **1100** according to the present invention is illustrated in FIGS. **23-36**. The fiber optic connector **1100**, in FIG. **23**, may include a housing **1102**, a latch component (push-pull mechanism) **1104**, and a crimp body **1106**. As discussed in more detail below, the housing **1102** and its components, the latch component **1104**, and the crimp body **1106** are the focus here. It is also preferred that there by a crimp ring and heat shrink tube and a strain relief boot as with the prior embodiment, but since the crimp ring and heat shrink tube and a strain relief boot are generally known components, they are omitted here for clarity.

Turning to FIG. **24**, inside the housing **1102** are two ferrule assemblies **1120** (which may be the same as ferrule assemblies **120**), two springs **1122**, and a spring push **1124**. The two ferrule assemblies **1120** each include a fiber optic ferrule **1130** (generally a 1.25 mm LC fiber optic ferrule), a ferrule holder **1132**, and a lead-in tube **1134**. The spring **1122** is added later. The ferrule assemblies **1120** are preferably preassembled and are inserted into the housing **1102** without needing any further processing.

The housing **1102** has a main body **1140** extending between a front end **1142** and a rear end **1144**, and has an opening **1146** extending therebetween. The opening **1146** of the housing **1102** may also have structures **1148** that orient and retain the ferrule assemblies **1120** in the housing **1102**. In this case, there are flat surfaces **1150** that engage corresponding flat surfaces **1152** on the ferrule holder **1132**, to keep the ferrule assemblies **1120** from rotating within the housing **1102**.

Once the ferrule assemblies **1120** are disposed within the housing **1102**, the springs **1122** are placed around the lead-in tube **1134** and against a back end **1138** of the ferrule holder **1132**. The spring push **1124** is then inserted into the opening **1146** of the housing **1102**. The spring push **1124** has a pair of latches **1154** that engage corresponding openings **1156** in the opposite sides of the main body **1140** of the housing **1102** to retain the spring push **1124** in the opening **1146**. The spring push **1124** has a forward facing surface **1158** to engage the rear ends of the springs **1122**. The forward facing surface **1158** generally corresponds to the two springs **1122** to ensure that that the spring push **1124** stays engaged with the springs **1122**. This configuration biases the ferrule assemblies **1120** toward the front end **1142** of the housing **1102**. While not shown, two optical fibers enter into the ferrule assemblies **1120** through the spring push **1124** and into the lead-in tubes **1124**.

The lead-in tubes **1134** are connected to and extend from the ferrule holder **1132**. Preferably, the lead-in tubes **1134** are secured to the ferrule holder **1132**, e.g. by adhesives, press-fit. The lead-in tubes **1134** also extend beyond the rear end of the ferrule holder **132** and the springs **1122** and the spring push **1124**. See FIG. **24**. This allows for injection of epoxy or other adhesives into the ferrule assemblies **1120** through the lead-in tubes **1134** to secure the optical fibers therein. With the lead-in tubes **1134** extending so far rearwardly, there is no concern that the epoxy or adhesives will interfere with the springs **1122**, the spring push **1124**, or other structures in the fiber optic connector **1100**.

The housing **1102** may also have an indicia of the polarity of the fiber optic connector **1100** as with the prior embodiment. Similarly, an indentation or other mark may be present on the housing **1102**.

The outside of the housing **1102** has many features that are integral to its use. See FIGS. **25** and **26**. First are the top surface **1160** and the bottom surface **1162**. The top and bottom surfaces **1160**,**1162** are preferably the same, but may have some differences and still fall within the scope of the present invention. Extending from the rear end **1144** towards the front **1142** of the housing **11020** on both the top surface **1160** and the bottom surface **1162** is a rail receiving portion **1164**. As will be discussed in more detail below, the rail receiving portion **1164** will stop before the front end **1142** as it will therefore create a stop surface **1166**. The latch component (push-pull mechanism) **1104** will make use of the stop surface **1166** to insert the fiber optic connector **1100** into various structures.

The rail receiving portion **1164** has a central portion **1168** and two lobe sections **1170**, one lobe on each side of the central portion **1168**. As best seen in FIG. **26**, the rail receiving portion **1164** has a T-shape configuration. This configuration matches that of the bottom surface of the latch component (push-pull mechanism) **1104** to form a sliding configuration. Other configurations are possible, as noted above.

The next feature of the housing **1102** and main body **1140** are the two side surfaces **1180**. The two side surfaces **1180** are those opposite to one another and separated by the top surface **1160** and the bottom surface **1162**. Referring to FIG. **26** in particular, each of the sides **1180** are divided into at least three portions. The first portion is a longitudinal central portion **1182** extending in a first plane G. The second portion is a longitudinal top portion **1184** extending in a second plane H, the first plane G is parallel to and offset from the second plane H. The third portion is a longitudinal bottom portion **1186** extending in the second plane H. The longitudinal top portion **1184** preferably is divided from the longitudinal central portion **1182** by a shoulder **1188**. The shoulder **1188** preferably has a surface that is in plane I and is perpendicular to both planes G and H. Similarly, the longitudinal bottom portion **1186** preferably is divided from the longitudinal central portion **1182** by a shoulder **1190**. The shoulder **1190** preferably has a surface that is in plane J and is perpendicular to both planes G and H. There is also an inclined wall **1196** between the bottom of the central portion **1168** and the shoulder **1188**. A portion of the latch component (push-pull mechanism) **1104** uses this inclined wall **1196** as a reference surface while moving along the housing **1102**. See FIG. **26**. The inclined wall **1196** ends at the stop surface **1166**, where the latch component (push-pull mechanism) **1104** engages the stop surface **1166** to move the fiber optic connector **1100** as discussed below.

The two longitudinal top portions **1184** and the two longitudinal bottom portions **1186** function to align the fiber optic connector **1100** in a horizontal direction in various structures, e.g., a carrier and an adapter. On the other hand, it is the shoulders **1188**,**1190** that align the fiber optic connector **1100** in a vertical direction as was discussed in detail above. As such, this discussion is not included here.

Also on the top surface **1160** and the bottom surface **1162** is a latch **1172** with an engagement surface **1174** and a release ramp **1176**. The latch **1172** is a cantilevered latch that works with the latch component (push-pull mechanism) **1104** to engage and disengage from an adapter. Finally, on the top surface **1160** and the bottom surface **1162** is an opening **1192** in the rail receiving portion **1164** for an extension from the latch component (push-pull mechanism) **1104**. As described in more detail below, the extension from the latch component (push-pull mechanism) **1104** engages a forward facing surface **1194** to remove the fiber optic connector **1100** from the adapter and or carrier. See FIG. **24**.

The crimp body **1106** has a front portion **1200** that is designed to interact and connect with the spring push **1124** and also is disposed within the opening **1146** of the housing **1102** when installed, which is usually after the epoxy used to secure the optical fibers in the ferrules **1130** has cured. The crimp body **1106** has a rear portion **1202** that extends behind the housing **1102** and provides an outer surface **1204** to receive a crimp band (e.g., crimp ring and heat shrink tube) therearound. Extending from a front end **1206** to the rear end **1208** is an opening **1210**. The opening **1210** at the front portion **1200** receives at least a portion of each of the lead-in tubes **1134**. The spring push **1124** has two tabs **1212** (FIG. **24**) on opposites sides thereof and extend in a rearward direction in the opening **1210** to engage an opening **1214** in side walls **1216** of the crimp body **1106**. The front end **1206** also has a forward facing surface **1218** that complements the rear of the spring push **1124** and, together with the tabs **1212**, keeps the crimp body **1106** securely fixed to fiber optic connector **1100**.

The opening **1210** in the crimp body **1106** rearwardly of the lead-in tubes provides a transition portion **1220** for the optical fibers that are secured in the fiber optic ferrules **1130**. Since the crimp body **1106** has a singular opening **1222** at the rear end thereof, the optical fibers need to be able to exit that singular opening **1222** in a smooth fashion so they are not bent beyond their bend radius, thereby damaging or breaking the optical fibers. The transition portion **1220** provides for this function.

The crimp body **1106** also has a top surface **1230** and the bottom surface **1232**. The top surface **1230** and the bottom surface **1232** may be configured with an area **1234** that complements the central portion **1168** and two lobe sections **1170** of the rail receiving portion **1164** above. The area **1234**

functions as an alignment feature of the rail receiving portion **1164**. As discussed more below, the latch component (push-pull mechanism) **1104** can be better aligned with the rail receiving portion **1164** by using the area **1234** on the crimp body **1106**.

While the crimp body **1106** is illustrated as a single, unitary body (i.e., molded at one time with one material), it could also be molded as two pieces and then later the two pieces secured to one another.

The latch component (push-pull mechanism) **1104** is illustrated in more detail in FIGS. **28-29**. The latch component (push-pull mechanism) **1104** has a main body **1250**, with a front portion **1254**, a middle portion **1256**, and a rear portion **1258**. Generally, the front portion **1254** is where the latch component **1104** engages the fiber optic connector **1100** and controls connections to an adapter and carrier. The middle portion **1256** generally provides for latching of latch component (push-pull mechanism) **1104** to a carrier. The rear portion **1258** has a grasping portion **1260** to allow a user to push and pull the latch component (push-pull mechanism) **1104** to engage and disengage the fiber optic connector **1100** (push-pull mechanism) **1104** from the adapter and/or carrier.

When the latch component (push-pull mechanism) **1104** is installed on the housing **1102**, the front portion **1254** has two rails **1262** to engage the stop surface **1166** to push the fiber optic connector **1100**. Pushing on the latch component (push-pull mechanism) **1104** causes the force to be transferred to the rails **1262**. There is a space **1264** between the rails **1262** to allow for the engagement surface **1174** of the latch **1172** to pass therebetween. The front portion **1254** then, moving rearwardly, has an opening **1268**. The opening **1268** receives the release ramp **1176**. A front portion of the opening **1268** has a chamfered surface **1270** to engage the chamfered surface of the release ramp **1176**. See also FIGS. **28** and **29**. Behind the opening **1268** is a downward extension **1272** to fit within the opening **1192** in the rail receiving portion **1164** and to engage the forward facing surface **1194** when removing the fiber optic connector **1100** as discussed below. See also FIG. **24**.

The next feature of the latch component (push-pull mechanism) **1104** is in the middle portion **1256** and is an opening **1274** that receives a part of a carrier for a number of fiber optic connectors **1100**. As noted above, sometimes it is beneficial for a number of fiber optic connectors **1100** to be linked to one another. This opening **1274** along with another embodiment of a carrier **1350** allows for the insertion/removal of the fiber optic connectors **1100** from an adapter **1400**. The opening **1274** is partially formed by a chamfered front surface **1276** and a generally flat rear surface **1278**.

The rear portion **1258** of the latch component (push-pull mechanism) **1104** has a grasping portion **1260**. Finally, a release **1280** is disposed on the side of the latch component (push-pull mechanism) **1104**. The release **1280** is an opening that provides access to the downward extension **1272** that fits within the opening **1192**. As noted above, the downward extension **1272** keeps the latch component (push-pull mechanism) **1104** positioned with the housing **1102**. To disengage the latch component (push-pull mechanism) **1104** from the housing **1102**, a pin or other small tool can be inserted into the release **1280** and deflect downward extension **1272** upward and out of the opening **1192**. The latch component (push-pull mechanism) **1104** can now be moved rearwardly from the housing **1102**.

FIG. **30** illustrates the fiber optic connector **1100** fully assembled and ready to be used. The major components of the fiber optic connector **1100** are labeled and the latch component (push-pull mechanism) **1104** in position to insert the fiber optic connector **1100** into a carrier **1350** and/or an adapter **1400**. As can be seen, the latch component (push-pull mechanism) **1104** is fully engaged and the two rails **1262** have engaged the stop surface **1166**.

Turning to FIGS. **30**, **31**, **33**, and **36**, the fiber optic connector can be inserted into a carrier **1350** (FIGS. **30** and **31**) and/or an adapter **1400** (FIG. **34**). The carrier **1350** provides the user with a convenient way to insert into and remove **4** fiber optic connectors **1100** (could also have more or fewer connectors, but usually in groups of two) from an adapter (or other telecommunications structure) rather than one at a time. It provides a cost savings time wise and also assists in preventing the stubbing of or breaking fiber optic connectors.

The carrier **1350** has a few features that enable the use of the carrier **1350** to correctly orient the fiber optic connectors **1100** (polarity) and also to align the fiber optic connectors to one another for insertion into the adapter. The carrier **1350** has a top **1352** and a bottom **1354** and the top **1352** has a cut out **1356** for each of the fiber optic connectors **1100**, or the latch component (push-pull mechanism) **1104**. Each of the cut outs **1356** has a cantilevered latch **1358** that protrudes into an opening **1360** of the carrier **1350**. If the fiber optic connector **1100** is inserted into the carrier **1350** incorrectly (wrong polarity) then the fiber optic connector **1100** will not seat in the carrier **1350** correctly. The combination of the latch **1358** and the bottom **1354** prevent the fiber optic connectors **1100** from being inserted incorrectly. The cantilevered latches **1358** have a projection **1362** that extends into the opening **1360** (FIG. **32**) and, when a fiber optic connector is inserted, rests in the opening **1274**. The first surface **1364** of projection **1362** is chamfered and is to engage the chamfered front surface **1276** of the latch component (push-pull mechanism) **1104** during removal of the fiber optic connector **1100**. The forward facing surface **1368** used to engage a rear surface of the housing **1102** when the carrier **1350** is used to insert the fiber optic connectors **1100** into the adapter **1400**. Finally, the rear facing surface **1370** used to engage the generally flat rear surface **1278** of opening **1274** when the carrier **1350** is used to remove the fiber optic connectors **1100** from the adapter **1400**.

Installation of the fiber optic connector **1100** into the carrier **1350** is illustrated in FIG. **33**. Using the latch component (push-pull mechanism) **1104**, the fiber optic connector **1100** is inserted into the carrier **1350** because the two rails **1262** to engage the stop surface **1166** thereby pushing the fiber-optic connector **1100** through the carrier **1350**. The release ramp **1176** is disclosed in the opening **1268** of the front portion **1254**. Similarly, the projection **1362** on the latch **1358** is disposed in the opening **1274** of the latch component (push-pull mechanism) **1104**. This method is repeated for each of the fiber optic connectors **1100** that are to be inserted into the carrier **1350**.

The fiber optic connectors **1100** can be inserted into the adapter **1400** is illustrated in FIG. **34**. As with the prior embodiment, fiber optic connectors **1100** can be inserted into the adapter **1400** one at a time, or in multiples using the carrier **1350**. Once the fiber of the connectors are aligned with the adapter **1400**, a user can grasp the carrier **1350** to push fiber optic connectors **1100** into the opening **1402** of the adapter **1400**. The forward facing surface **1368** on the projection **1362** engages the rear surface the housing **1102** and, more particularly, the rear surface of the central portion **1168** of the rail receiving portion **1164**. That causes the latch **1172** with an engagement surface **1174** to deflect downward

as it enters into the adapter **1400**, and once it reaches the window **1404**, latch **1172** will return and position itself in the window **1404**.

The removal of the fiber optic connectors **1100** be explained with reference to FIG. **35**. Fiber optic connectors **1100** can be removed from the adapter **1400** by using the carrier **1354** or the latch component (push-pull mechanism) **1104**. If the user is going to use the latch component (push-pull mechanism) **1104**, the user will pull on the grasping portion **1260**. This will cause the chamfered surface **1270** to engage the release ramp **1176**. This will cause the latch **1172** to be biased downward freeing the engagement surface **1174** from the adapter window **1402**. Further pulling on the latch component (push-pull mechanism) **1104** will pull the fiber optic connector **1100** from the adapter **1400** as the rearward facing surface **1272** engages surface **1194** in the opening **1192**.

If the carrier **1350** is to be used, the carrier **1350** is moved rearwardly relative to the latch component (push-pull mechanism) **1104**. The rear facing surface **1370** of the carrier **1350** engages the generally flat rear surface **1278** of opening **1274**, causing the chamfered surface **1270** to engage the release ramp **1176**. This releases all of the fiber optic connectors **1100** from the adapter **1400**.

Finally, with reference to FIG. **36**, the fiber optic connector **1100** can be removed from the carrier **1350**. While holding the carrier **1350** steady, the user can pull on the latch component (push-pull mechanism) **1104**, which causes the chamfered service **1276** in the opening **1274** to engage the first surface **1364** of projection **1362** of the carrier **1350**. This will cause the cantilevered latch **1358** to deflect upward and out-of-the-way so that the latch component (push-pull mechanism) **1104** can be removed from the fiber optic connector.

An alternative spring push **1724** is illustrated in FIG. **37**. The spring push **1724** has a pair of detents **1726** that frictionally engage an inside surface of the housing. This would eliminate the need for any openings in the housing as there are no latches to be secured. The spring push **1724** includes an extension **1728** with opposing sides **1730** that are semi-circular and provide more support to the springs **122**. The extension **1728** terminates at two circular surfaces **1732** that engages the end of the springs **122**. There are openings **1734** in the middle of the circular surfaces **1732** to receive lead-in tubes, that extend out the back of the spring push **1724**. The back end of the spring push **1724** may also have a different connection system for a crimp band.

An alternative crimp body **1706** is illustrated in FIG. **38**. The crimp body **1706** has two projections **1708** and two t-shaped extensions **1710** directed toward the front thereof. The crimp body **1706** provides the same function as the crimp bands in the two prior embodiments. While not shown, the top and bottom surfaces **1712** and **1714** may be configured to assist with the alignment of a push-pull mechanism. The crimp body **1706** also provides an internal space that allows for a smooth transition of the optical fibers through the openings **1734** and the lead-in tubes of any associated fiber optic connector.

A third embodiment of a fiber optic connector **2100** according to the present invention is illustrated in FIGS. **39-49**. The fiber optic connector **2100** is similar to the other embodiments in that the majority of the parts of the fiber optic connector **2100** are the same, except that the latch component (push-pull mechanism) **2104** is a self-returning latch component (push-pull mechanism) **2104**. That is, that if the user pulls rearwardly on the latch component (push-pull mechanism) **2104**, then the latch component (push-pull mechanism) **2104** will return to its original position (a forward position) without having to be returned manually. In the prior embodiments, if the latch component (push-pull mechanism) **104**, **1104** were to be pulled (to remove the fiber optic connectors from the adapter/carrier, then the latch component (push-pull mechanism) would remain in a rearward position. The present embodiment is biased such that the latch component (push-pull mechanism) **2104** will automatically return to the forward position.

Given the similarities between this embodiment of a fiber optic connector and those discussed above, particularly the first embodiment, only a discussion about the new components will be included. Thus, the discussion will be about the latch component (push-pull mechanism) **2104** and small changes to the housing **2102**.

The latch component (push-pull mechanism) **2104** is illustrated in more detail in FIGS. **40-48**. The latch component (push-pull mechanism) **2104** has a main body **2210** and a latch body **2212** that attaches to the main body **2210**. See FIGS. **40-43**. The main body **2210** has a front portion **2214**, a middle portion **2216**, and a rear portion **2218**. Generally, the front portion **2214** is where the latch body **2212** attaches to the main body **2210** and provides for the latching of the fiber optic connector **2100** to an adapter and carrier as discussed above. The middle portion **2216** provides an area for the flexure member **2220** and to engage the latch component (push-pull mechanism) **2104**. The rear portion **2218** has a grasping portion **2222** to allow a user to push and pull the latch component (push-pull mechanism) **2104** to engage and disengage the fiber optic connector **2100** from the adapter and/or carrier.

The front portion **2214** is divided into a first front portion **2230** and a second front portion **2232**. The first front portion **2230** has two windows **2234** and **2236** and the second front portion **2232** has a window **2238**. The second window **2236** of the first front portion **2230** and window **2238** are to receive a latch from the latch body **2212** therethrough. The first window **2234** (and the third window **2238** as well) is to receive a latch pad on the latch body **2212**. An underside of the first portion **2214** has a groove **2240** on either side to receive an extended portion of the latch pads **2242**,**2244** from the latch body **2212** (see FIGS. **43** and **47**) to secure the latch body **2212** to the main body **2210**. The extended portion of the latch pads **2242**,**2244** (and thus the latch body **2212**) are able to slide within the grooves **2240** to allow for the latching and unlatching the fiber optic connector **2100**. The grooves **2240** should extend the length of the first portion **2214**.

The second front portion **2232** has an upper surface **2246** that is higher than an upper surface **2248** of the first front portion **2214**. This allows for the latching of a carrier and an adapter with the same device, as described above for the other embodiments. On the bottom side **2250** of the second front portion **2232** are two extensions **2252**, **2254** that are a complementary configuration of a rail receiving portion of the housing **2102**. See FIG. **41**. The latch body **2212** also has the same rail portion configuration of two extensions **2256**, **2258** on the bottom thereof. This allows the main body **2210** and the latch body **2212** to be slidingly attached to the rail receiving portion of the housing **2102**. When the latch body **2212** is inserted into the first front portion **2230**, a front surface **2260** of the two extensions **2252**, **2254** provides a pushing surface by which the main body **2210** can push the latch body **2212** in the rail receiving portion. See also FIG. **44**. The front surface **2262** of the two extensions **2256**, **2258** also provides a pushing surface to be used against the stop surface **2264** of the housing **2102**. See FIGS. **45** and **48**. This

allows for the user to exert a force on the latch component (push-pull mechanism) **2104** which is transferred through the main body **2210** to the latch body **2212** and to the housing **2102** to insert the fiber optic connector **2100** into a carrier and/or adapter.

The middle portion **2216** also has a window **2270** to receive a portion of the flexure member **2220**, which extends from the latch body **2212**. The middle portion **2216** also has on the bottom side **2250** a cavity or space **2272** to receive any other portions of the flexure member **2220** that may be needed.

Turning to FIGS. **42** and **43**, the latch body **2212** has two latches, an adapter latch **2280** and a carrier latch **2282**. The latch body **2212** may only have one of the latches, depending upon its uses and the needs of the user. The adapter latch **2280** extends from a forward portion of the latch body **2212** and protrudes through window **2236** of the main body **2210**. The carrier latch **2282** also extends from the latch body **2212**, from a rear portion thereof, and protrudes through the window **2238** of the main body **2210**. As is recognized from FIG. **44**, the adapter latch **2280** does not rise as high as the carrier latch **2282** as in the other embodiments as well. The discussion from those embodiments with regard to the position and the composition of the ends of the latches is adopted for this embodiment as well.

The latch body **2212** has a connector latch **2290** as well. The connector latch **2290** extends forward beyond the front surface **2262** of the two extensions **2256**, **2258** to engage a latch stop **2292** at the stop surface **2264**. The connector latch **2290** has a downward curling portion **2294** that provides a surface to engage the latch stop **2292**. The connector latch **2290** may also have a latch rib **2296** that connects the curling portion **2294** to the remainder of the connector latch **2290**. The latch stop **2292** may also have a groove **2298** there-in to receive the latch rib **2296**. It is the connector latch **2290** that retains the latch body **2212** with the housing **2102**. As described below in more detail, when the latch component (push-pull mechanism) **2104** is pulled rearwardly, the connection of the connector latch **2290** with the housing **2102** allows the main body **2210** to move relative to the latch body **2212**.

The latch body **2212** also has two latch pads **2242**,**2244**. The latch pads **2242**,**2244** have two functions: first to help retain the latch body **2212** in the main body **2210**, and second to limit the movement of the latch component (push-pull mechanism) **2104** relative to the housing **2102**. As seen in FIGS. **39**, **45**, and **48**, the first latch pad **2242** is disposed within the first window **2234** of the main body **2210**. It is evident that as the main body **2210** is pulled relative to the latch body **2212**, the first latch pad **2242** will slide relative to the first window **2234** only for certain distance before it engages a portion of the main body **2210**. This is true with regard to the second latch pad **2244** as well. Second latch pad **2244** is disposed in the second window **2236** along with the carrier latch **2282**. As the main body **2210** is pulled relative to the latch body **2212**, the main body **2210** pushes on the adapter latch **2280** (and the carrier latch **2282**) in downward out of the window **2236**. As the main **2210** body continues in a rearward direction, it will engage the front end of the second pad **2244**, prohibiting any further movement of the main body **2210** to the latch body **2212**. See FIG. **48**.

Turning to FIGS. **42**, **43**, **46**, the flexure member **2220** will now be described. With particular reference to FIGS. **42** and **43**, the flexure member **2220** extends from the rear portion of the latch body **2212**. In the embodiment illustrated in the figures, the flexure member **2220** has a first curved portion **2300** and a second curved portion **2302**. Second curved portion **2302** terminates at terminal end **2304**. The terminal end **2304** is preferably disposed with in the third window **2270** and also preferably makes contact with at least one of the surfaces that define window **2270**. See FIG. **46**. The first curve portion **2300** also partially resides in the cavity or space **2272**. It is also possible that the flexure member **2220** only has one of the two curved portions **2300**,**2302**, depending upon the amount of force required to main body **2210** relative to the latch body **2212**.

As the main body **2210** is pulled rearwardly relative to the latch body **2212**, the latches **2280**, **2282** are moved downward (as also described above) releasing the fiber optic connector **2100** from any adapter and/or carrier. During this movement, the flexure member **2220** is put under tension (the curved portions begin to straighten out or alter from the shape in their state) as the terminal end **2304** presses against the wall of opening **2270**. Once the fiber optic connector **2100** is free from the adapter and/or carrier and the user releases the grasping portion **2222**, the main body **2210** will return to its original state as the flexure member pulls on the main body **2210**. See FIG. **39**. The flexure member **2220** acts as a self-return mechanism for the latch component (push-pull mechanism) **2104**. Accordingly, there are other self-returning mechanisms that may be used instead of the particular embodiment of the flexure member **2220**. For example, a spring could be used to bias the main body **2210** relative to the latch body **2212**.

It will be apparent to those skilled in the art that various modifications and variations can be made to the present invention without departing from the spirit and scope of the invention. Thus it is intended that the present invention cover the modifications and variations of this invention provided they come within the scope of the appended claims and their equivalents.

What is claimed:

1. A push-pull mechanism for use with a fiber optic connector having a housingcomprising:

a main body having a front portion, a middle portion and a rear portion;

a latch body connected to the front portion of the main body, the front portion having a window to receive a latch therethrough from the latch body, the latch for engaging a fiber optic connector adapter; and

a rail portion extending along side portions of the main body to slidably engage the housing on an external surface thereof.

2. The push-pull mechanism according to claim **1**, wherein the latch body is positioned underneath the main body.

3. The push-pull mechanism according to claim **1**, wherein the latch is an adapter latch at least partially positioned and moveable within the window, the adapter latch being engageable with the fiber optic adapter to retain or release the fiber optic connector therefrom.

4. The push-pull mechanism according to claim **1**, further comprising a grasping portion on the rear portion configured to allow a user to push and pull the push-pull mechanism to engage and disengage the fiber optic connector from the adapter.

5. The push-pull mechanism according to claim **1**, further comprising a flexure member connected to the latch body to bias the main body toward a front end of the fiber optic connector housing.

6. The push-pull mechanism according to claim **1**, further comprising a second window and a second latch, the second latch extending through the second window and to engage a carrier.

7. The push-pull mechanism according to claim **1**, wherein the location of the rail portion in housing thereby determines a polarity of the fiber optic connector.

8. A push-pull mechanism for use with a fiber optic connector having a housing comprising:

a main body having a front portion, a middle portion and a rear portion;

a latch body connected to the front portion of the main body, the front portion having a window to receive a latch therethrough from the latch body, the latch for engaging a fiber optic connector adapter; and

a rail portion extending along side portions of the main body to slidably engage the housing on an external surface thereof, the rail portion being positioned to indicate a polarity of the fiber optic connector.

9. The push-pull mechanism according to claim **8**, further comprising a flexure member connected to the latch body to bias the main body toward a front end of the fiber optic connector housing.

10. The push-pull mechanism according to claim **9**, wherein the flexure member engages a portion of the fiber optic connector housing in front of the front portion of the main body.

11. The push-pull mechanism according claim **10**, wherein the flexure member engages the main body in the front portion, the middle portion and the rear portion.

12. The push-pull mechanism according to claim **8**, further comprising a grasping portion on the rear portion configured to allow a user to push and pull the push-pull mechanism to engage and disengage the fiber optic connector from the adapter.

13. The push-pull mechanism according to claim **8**, further comprising a second window and a second latch, the second latch extending through the second window and to engage a carrier.

14. The push-pull mechanism according to claim **8**, wherein the location of the rail portion in housing thereby determines a polarity of the fiber optic connector.

15. A push-pull mechanism to engage and disengage a fiber optic connector to and from an adapter, respectively, comprising:

a main body having a window;

a latch body connected to a front portion of the main body, the latch body having a latch extending rearwardly from a forward portion of the latch body and having a proximal end, the latch being positioned at least partially within the window from underneath the main body; and

a rail portion extending along side portions of the main body to slidably engage the fiber optic connector housing on an external surface thereof,

wherein to engage the fiber optic connector to the adapter, the proximal end is engaged to an inner surface of the adapter until the latch is at least partially inside an adapter window in contact with an engaging surface of the adapter window, and

wherein to disengage the fiber optic connector from the adapter, an underside of the main body is engaged with the latch in a rearward motion of the main body to move the proximal end out of the adapter window, thereby disengaging the latch from the engaging surface of the adapter window.

* * * * *