UNITED STATES PATENT AND TRADEMARK OFFICE

CERTIFICATE OF CORRECTION

PATENT NO. : 9,731,202 B2
APPLICATION NO. : 11/768892
DATED : August 15, 2017
INVENTOR(S) : Joshua Hartwell et al.

It is certified that error appears in the above-identified patent and that said Letters Patent is hereby corrected as shown below:

On the Title Page

Inventor information in item (75) should read as follows:
Joshua Hartwell, Santa Monica, CA (US); **Paul Bolten**, Playa del Rey, CA (US)

Signed and Sealed this
Twentieth Day of June, 2023

Katherine Kelly Vidal

Katherine Kelly Vidal
Director of the United States Patent and Trademark Office

UNITED STATES PATENT AND TRADEMARK OFFICE

UNITED STATES DEPARTMENT OF COMMERCE
United States Patent and Trademark Office
Address: COMMISSIONER FOR PATENTS
P.O. Box 1450
Alexandria, Virginia 22313-1450
www.uspto.gov

APPLICATION NUMBER	FILING OR 371(C) DATE	FIRST NAMED APPLICANT	ATTY. DOCKET NO./TITLE
11/768,892	06/26/2007	Joshua Hartwell	09685.0045-00000

CONFIRMATION NO. 3817

POA ACCEPTANCE LETTER

OC000000057679312

22852
FINNEGAN, HENDERSON, FARABOW, GARRETT & DUNNER LLP
901 NEW YORK AVENUE, NW
WASHINGTON, DC 20001-4413

Date Mailed: 06/01/2023

NOTICE OF ACCEPTANCE OF POWER OF ATTORNEY

This is in response to the Power of Attorney filed 05/25/2023.

The Power of Attorney in this application is accepted. Correspondence in this application will be mailed to the above address as provided by 37 CFR 1.33.

Questions about the contents of this notice and the requirements it sets forth should be directed to the Office of Data Management, Application Assistance Unit, at **(571) 272-4000** or **(571) 272-4200** or **1-888-786-0101**.

/qmjackson/

IN THE UNITED STATES PATENT AND TRADEMARK OFFICE

In re U.S. Patent No.: 9,731,202	)	
	)	
Inventor: Joshua Hartwell et al.	)	Confirmation No.: 3817
	)	
Issued: August 15, 2017	)	
	)	***VIA PATENT CENTER***
For: METHODS AND SYSTEMS FOR UPDATING IN-GAME CONTENT	)	

Commissioner for Patents
Office of Data Management Attention: Certificate of Correction Branch
P.O. Box 1450
Alexandria, VA 22313-1450

Commissioner:

REQUEST FOR CERTIFICATE OF CORRECTION UNDER 37 C.F.R. § 1.324

Pursuant to 35 U.S.C. § 256 and 37 C.F.R. § 1.324, this is a request for a Certificate of Correction to correct inventorship. It is respectfully requested that the following inventor be added to the above-captioned patent: 9,731,202. Currently, this patent lists Joshua Hartwell as the inventive entity. The correct inventive entity of the above-captioned patent should be: **Joshua Hartwell and Paul Bolten**.

As required by 37 C.F.R. § 1.324(b), enclosed are statements from the current named inventors and from the person being added as inventor stating that they agree to the requested change of inventorship, and a statement from the assignee of record, Flip Phone Games, Inc., stating that it agrees to the change of inventorship in the patent. In addition, a declaration under 37 C.F.R. § 1.63 by the person being added as inventor are submitted herewith.

Patentee requests the Director to issue a Certificate of Correction naming the correct list of inventors. A Certificate of Correction of one page is filed with this paper.

The $160 fee set forth in 37 C.F.R. § 1.20(b) is enclosed.

If there are any additional fees due in connection with the filing of this request, please charge the fees to our Deposit Account No. 06-0916.

Respectfully submitted,

FINNEGAN, HENDERSON, FARABOW,
GARRETT & DUNNER, L.L.P.

Dated: May 25, 2023

By: /Matthew M. Karas/
Matthew M. Karas
Reg. No. 74,279
(571) 203-2745

IN THE UNITED STATES PATENT AND TRADEMARK OFFICE

In re U.S. Patent No.: 9,731,202	)	
	)	
Inventor: Joshua Hartwell et al.	)	Confirmation No.: 3817
	)	
Issued: August 15, 2017	)	
	)	***VIA PATENT CENTER***
For: METHODS AND SYSTEMS FOR	)	
UPDATING IN-GAME CONTENT	)	

Commissioner for Patents
Office of Data Management Attention: Certificate of Correction Branch
P.O. Box 1450
Alexandria, VA 22313-1450

Commissioner:

STATEMENT OF INVENTORS
IN SUPPORT OF REQUEST UNDER 37 C.F.R.§ 1.324

Pursuant to 37 C.F.R. § 1.324(b)(1), I, Joshua Hartwell, named inventor in the above-captioned patent, agree to the change of inventorship to add Paul Bolten as an inventor.

Date: 5-11-23 By: /Joshua Hartwell/
Joshua Hartwell

IN THE UNITED STATES PATENT AND TRADEMARK OFFICE

In re U.S. Patent No.: 9,731,202	)	
	)	
Inventor: Joshua Hartwell et al.	)	Confirmation No.: 3817
	)	
Issued: August 15, 2017	)	
	)	***VIA PATENT CENTER***
For: METHODS AND SYSTEMS FOR UPDATING IN-GAME CONTENT	)	

Commissioner for Patents
Office of Data Management Attention: Certificate of Correction Branch
P.O. Box 1450
Alexandria, VA 22313-1450

Commissioner:

STATEMENT IN SUPPORT OF REQUEST UNDER 37 C.F.R.§ 1.324

Pursuant to 37 C.F.R. § 1.324(b)(1), I, Paul Bolten, agree to be added as an inventor to the above-captioned patent.

Date: May 12, 2023 By: /Paul Bolten/
Paul Bolten

IN THE UNITED STATES PATENT AND TRADEMARK OFFICE

In re U.S. Patent No.: 9,731,202	)	
	)	
Inventor: Joshua Hartwell et al.	)	Confirmation No.: 3817
	)	
Issued: August 15, 2017	)	
	)	***VIA PATENT CENTER***
For: METHODS AND SYSTEMS FOR UPDATING IN-GAME CONTENT	)	

Commissioner for Patents
Office of Data Management Attention: Certificate of Correction Branch
P.O. Box 1450
Alexandria, VA 22313-1450
Commissioner:

STATEMENT BY ASSIGNEE
IN SUPPORT OF REQUEST UNDER 37 C.F.R. § 1.324

Pursuant to 37 C.F.R. § 1.324(b)(2), and in accordance with 37 C.F.R. § 3.73(c), Flip Phone Games, Inc., submits that it is the assignee of the entire right, title, and interest in the above-identified patent by virtue of the assignment(s) recorded herewith and at Reel/Frame: 031958/0110 and 057106/0814.

Flip Phone Games, Inc., agrees to change inventorship in U.S. Patent No. 9,731,202 by adding Paul Bolten as a named inventor.

I, the undersigned, have the authority to act on behalf of the assignee, Flip Phone Games, Inc.

Date: _5-11-23_____

By: /Joshua Hartwell/_____
Joshua Hartwell
President
Flip Phone Games, Inc.

UNITED STATES PATENT AND TRADEMARK OFFICE

CERTIFICATE OF CORRECTION

PATENT NO. 9,731,202 Page 1 of 1

APPLICATION NO.: 11/768,892

ISSUE DATE: August 15, 2017

INVENTOR(S): Joshua HARTWELL et al.

It is hereby certified that an error or errors appear in the above-identified patent and that said Letters Patent is hereby corrected as shown below:

On the Title Page of the patent, Inventor information in paragraph (75) should read as follows:

(75) Inventors: **Joshua Hartwell**, Santa Monica, CA (US); **Paul Bolten**, Playa del Rey, CA (US)

MAILING ADDRESS OF SENDER

Finnegan, Henderson, Farabow,
Garrett & Dunner, L.L.P.
901 New York Avenue, N.W.
Washington, D.C. 20001-4413

Under the Paperwork Reduction Act of 1995, no persons are required to respond to a collection of information unless it displays a valid OMB control number.

STATEMENT UNDER 37 CFR 3.73(c)

Applicant/Patent Owner: Flip Phone Games, Inc.

Application No./Patent No.: 9,731,202 Filed/Issue Date: August 15, 2017

Titled: Methods and Systems for Updating In-Game Content

Flip Phone Games, Inc., a Corporation

(Name of Assignee) (Type of Assignee, e.g., corporation, partnership, university, government agency, etc.)

states that, for the patent application/patent identified above, it is (choose **one** of options 1, 2, 3 or 4 below):

1. ☑ The assignee of the entire right, title, and interest.

2. ☐ An assignee of less than the entire right, title, and interest (check applicable box):

☐ The extent (by percentage) of its ownership interest is _____%. Additional Statement(s) by the owners holding the balance of the interest must be submitted to account for 100% of the ownership interest.

☐ There are unspecified percentages of ownership. The other parties, including inventors, who together own the entire right, title and interest are:

Additional Statement(s) by the owner(s) holding the balance of the interest must be submitted to account for the entire right, title, and interest.

3. ☐ The assignee of an undivided interest in the entirety (a complete assignment from one of the joint inventors was made). The other parties, including inventors, who together own the entire right, title, and interest are:

Additional Statement(s) by the owner(s) holding the balance of the interest must be submitted to account for the entire right, title, and interest.

4. ☐ The recipient, via a court proceeding or the like (*e.g.*, bankruptcy, probate), of an undivided interest in the entirety (a complete transfer of ownership interest was made). The certified document(s) showing the transfer is attached.

The interest identified in option 1, 2 or 3 above (not option 4) is evidenced by either (choose **one** of options A or B below):

A. ☐ An assignment from the inventor(s) of the patent application/patent identified above. The assignment was recorded in the United States Patent and Trademark Office at Reel _____, Frame _____, or for which a copy thereof is attached.

B. ☑ A chain of title from the inventor(s), of the patent application/patent identified above, to the current assignee as follows:

1. From: Joshua Hartwell To: GOSUB 60, INC.

The document was recorded in the United States Patent and Trademark Office at Reel 031958, Frame 0110, or for which a copy thereof is attached.

2. From: GOSUB 60, INC. To: FLIP PHONE GAMES, INC.

The document was recorded in the United States Patent and Trademark Office at Reel 057106, Frame 0814, or for which a copy thereof is attached.

This collection of information is required by 37 CFR 3.73(b). The information is required to obtain or retain a benefit by the public which is to file (and by the USPTO to process) an application. Confidentiality is governed by 35 U.S.C. 122 and 37 CFR 1.11 and 1.14. This collection is estimated to take 12 minutes to complete, including gathering, preparing, and submitting the completed application form to the USPTO. Time will vary depending upon the individual case. Any comments on the amount of time you require to complete this form and/or suggestions for reducing this burden, should be sent to the Chief Information Officer, U.S. Patent and Trademark Office, U.S. Department of Commerce, P.O. Box 1450, Alexandria, VA 22313-1450. DO NOT SEND FEES OR COMPLETED FORMS TO THIS ADDRESS. **SEND TO: Commissioner for Patents, P.O. Box 1450, Alexandria, VA 22313-1450.**

If you need assistance in completing the form, call 1-800-PTO-9199 and select option 2.

Under the Paperwork Reduction Act of 1995, no persons are required to respond to a collection of information unless it displays a valid OMB control number.

STATEMENT UNDER 37 CFR 3.73(c)

3. From: JOSHUA HARTWELL and PAUL BOLTEN To: FLIP PHONE GAMES, INC.

The document was recorded in the United States Patent and Trademark Office at

Reel _____, Frame _____, or for which a copy thereof is attached.

4. From: _____ To: _____

The document was recorded in the United States Patent and Trademark Office at

Reel _____, Frame _____, or for which a copy thereof is attached.

5. From: _____ To: _____

The document was recorded in the United States Patent and Trademark Office at

Reel _____, Frame _____, or for which a copy thereof is attached.

6. From: _____ To: _____

The document was recorded in the United States Patent and Trademark Office at

Reel _____, Frame _____, or for which a copy thereof is attached.

☐ Additional documents in the chain of title are listed on a supplemental sheet(s).

☑ As required by 37 CFR 3.73(c)(1)(i), the documentary evidence of the chain of title from the original owner to the assignee was, or concurrently is being, submitted for recordation pursuant to 37 CFR 3.11.

[NOTE: A separate copy (i.e., a true copy of the original assignment document(s)) must be submitted to Assignment Division in accordance with 37 CFR Part 3, to record the assignment in the records of the USPTO. See MPEP 302.08]

The undersigned (whose title is supplied below) is authorized to act on behalf of the assignee.

/Matthew M. Karas/	May 25, 2023
Signature	Date
Matthew M. Karas	74,279
Printed or Typed Name	Title or Registration Number

SOLE/JOINT INVENTION
(Worldwide Rights)
Attorney Docket No. 09685.0044-00000; 09685.0044-01000; 09685.0045-00000; 09685.0045-01000; 09685.0045-02000; 15919.0003-03000

ASSIGNMENT

WHEREAS I/We are the below-named inventors (hereinafter referred to as **Assignors**) of the inventions titled Methods and Systems for Providing In-Game Hot Spots and Methods and Systems for Updating In-Game Content, including as disclosed and claimed in the applications and patents identified below.

Patent Number	Issue Date	Application Number	Filing Date	Title	Country of Filing
8,688,089	April 1, 2014	11/768,890	June 26, 2007	Methods and Systems for Providing In-Game Hot Spots	US
9,427,662	August 30, 2016	14/180,890	February 14, 2014	Methods and Systems for Providing In-Game Hot Spots	US
9,731,202	August 15, 2017	11/768,892	June 26, 2007	METHODS AND SYSTEMS FOR UPDATING IN-GAME CONTENT	US
10,617,958	April 14, 2020	15/645,028	July 10, 2017	METHODS AND SYSTEMS FOR UPDATING IN-GAME CONTENT	US
11,117,056	September 14, 2021	16/844,256	April 9, 2020	METHODS AND SYSTEMS FOR UPDATING IN-GAME CONTENT	US
		17/411,181	August 25, 2021	SYSTEMS AND METHODS FOR UPDATING IN-GAME CONTENT	US

WHEREAS, **Flip Phone Games, Inc.**, a corporation of **Delaware** whose post office address is **841 23rd Street, Santa Monica, California 90403** (hereinafter referred to as **Assignee**), is desirous of securing the entire right, title, and interest in and to these inventions in all countries throughout the world, and in and to all applications for patents on these inventions in all countries throughout the world, including any PCT International Application and all national stage applications based thereon that may be filed, and all patents issued upon such applications in all countries throughout the world;

NOW THEREFORE, be it known that, for good and valuable consideration the receipt of which from Assignee is hereby acknowledged, I/We, as Assignors, have sold, assigned, transferred, and set over, and do hereby sell, assign, transfer, and set over unto the Assignee, its lawful successors and assigns, my/our entire right, title, and interest in and to these inventions, the above-referenced applications and patents that disclose and claim these inventions, any PCT International Applications and all national stage applications based thereon that may be filed, any other applications for patents filed anywhere in the world that claim these inventions, and all divisions, and continuations of any such application, and all patents which may be granted thereon, and all reissues thereof, and all rights to claim priority in any country on the basis of any such applications, and all extensions, renewals, and reissues thereof; and I/We hereby authorize and request that any official of any country whose duty it is to issue patents on applications as described above, to issue all Letters Patent for these inventions to Assignee, its successors and assigns, in accordance with the terms of this Assignment;

AND, I/WE covenant that I/We have the full right to convey the interest assigned by this Assignment, and I/We have not executed and will not execute any agreement in conflict with this Assignment;

AND, I/WE further covenant and agree that I/We will, without further consideration, communicate with Assignee, its successors and assigns, any facts known to me/us respecting these inventions, and testify in any legal proceeding, sign all lawful papers when called upon to do so, execute and deliver any and all papers that may be necessary or desirable to perfect the title to these inventions in said Assignee, its successors or assigns, execute all divisional, continuation, and reissue applications, make all rightful oaths and generally do everything possible to aid Assignee, its successors and assigns, to obtain and enforce proper patent protection for these inventions in the United States and any foreign country, it being understood that any expense incident to the execution of such papers shall be borne by the Assignee, its successors and assigns.

IN TESTIMONY WHEREOF, I/We have hereunto set our hands.

ASSIGNOR (Inventor 1)

Joshua Hartwell

Print Name

841 23rd Street

Santa Monica, CA 90403

Address

/Joshua Hartwell/

Signature

5-12-23

Execution Date

ASSIGNOR (Inventor 2)

Paul Bolten

Print Name

7709 W. 85th St

Playa del Rey, CA, 90293

Address

/Paul Bolten/

Signature

May 12, 2023

Execution Date

Assignee Name: Flip Phone Games, Inc.

Signature: /Joshua Hartwell/

Printed Name: Joshua K. Hartwell

Corporate Title: President

Date: 5-12-23

UNITED STATES
PATENT AND TRADEMARK OFFICE

P.O. Box 1450
Alexandria, VA 22313 - 1450
www.uspto.gov

ELECTRONIC PAYMENT RECEIPT

APPLICATION #	RECEIPT DATE / TIME	ATTORNEY DOCKET #
11/768,892	05/25/2023 01:57:54 PM ET	09685.0045-00000

Title of Invention

METHODS AND SYSTEMS FOR UPDATING IN-GAME CONTENT

Application Information

APPLICATION TYPE	Utility - Nonprovisional Application under 35 USC 111(a)	PATENT #	9731202
CONFIRMATION #	3817	FILED BY	Linda Clark
PATENT CENTER #	62155154	AUTHORIZED BY	Matthew Karas
CUSTOMER #	22852	FILING DATE	06/26/2007
CORRESPONDENCE ADDRESS	-	FIRST NAMED INVENTOR	Joshua Hartwell

Payment Information

PAYMENT METHOD	PAYMENT TRANSACTION ID	PAYMENT AUTHORIZED BY
CARD / 1005	E20235OE00479862	Linda Clark

FEE CODE	DESCRIPTION	ITEM PRICE($)	QUANTITY	ITEM TOTAL($)
1811	CERTIFICATE OF CORRECTION	160.00	1	160.00
			TOTAL AMOUNT:	$160.00

This Acknowledgement Receipt evidences receipt on the noted date by the USPTO of the indicated documents, characterized by the applicant, and including page counts, where applicable. It serves as evidence of receipt similar to a Post Card, as described in MPEP 503.

New Applications Under 35 U.S.C. 111

If a new application is being filed and the application includes the necessary components for filing date (see 37 CFR 1.53(b)-(d) and MPEP 506), a Filing Receipt (37 CFR 1.54) will be issued in due course and the date shown on this Acknowledgement Receipt will establish the filing date of the application

National Stage of an International Application under 35 U.S.C. 371

If a timely submission to enter the national stage of an international application is compliant with the conditions of 35 U.S.C. 371 and other applicable requirements a Form PCT/DO/EO/903 indicating acceptance of the application as a national stage submission under 35 U.S.C. 371 will be issued in addition to the Filing Receipt, in due course.

New International Application Filed with the USPTO as a Receiving Office

If a new international application is being filed and the international application includes the necessary components for an international filing date (see PCT Article 11 and MPEP 1810), a Notification of the International Application Number and of the International Filing Date (Form PCT/RO/105) will be issued in due course, subject to prescriptions concerning national security, and the date shown on this Acknowledgement Receipt will establish the international filing date of the application.

PTO/AIA/81A (02-15)
Approved for use through 03/31/2021. OMB 0651-0035
U.S. Patent and Trademark Office; U.S. DEPARTMENT OF COMMERCE
Under the Paperwork Reduction Act of 1995 no persons are required to respond to a collection of information unless it displays a valid OMB control number

PATENT - POWER OF ATTORNEY OR REVOCATION OF POWER OF ATTORNEY WITH A NEW POWER OF ATTORNEY AND CHANGE OF CORRESPONDENCE ADDRESS

Patent Number	9,731,202
Issue Date	August 15, 2017
First Named Inventor	Joshua Hartwell
Title	Methods and Systems for Updating In-Game Content
Attorney Docket No.	09685.0045-00000

I hereby revoke all previous powers of attorney given in the above-identified patent.

☐ A Power of Attorney is submitted herewith.

OR

☒ I hereby appoint Practitioner(s) associated with the Customer Number identified in the box at right as my/our attorney(s) or agent(s) with respect to the patent identified above, and to transact all business in the United States Patent and Trademark Office connected therewith: 22852

OR

☐ I hereby appoint Practitioner(s) named below as my/our attorney(s) or agent(s) with respect to the patent identified above, and to transact all business in the United States Patent and Trademark Office connected therewith:

Practitioner(s) Name	Registration Number

Please recognize or change the correspondence address for the above-identified patent to:

☒ The address associated with the above-identified Customer Number.

OR

☐ The address associated with the Customer Number identified in the box at right:

OR

☐ Firm or Individual Name					
Address					
City		State		Zip	
Country					
Telephone		Email			

I am the:

☐ Applicant.

OR

☒ Patent owner.

Statement under 37 CFR 3.73(c) (Form PTO/AIA/96) submitted herewith or filed on _____.

SIGNATURE of Applicant or Patent Owner

Signature	/Joshua Hartwell/	Date	5-11-23
Name	Josh Hartwell	Telephone	
Title and Company	President, Flip Phone Games, Inc.		

NOTE: Signatures of all the applicants or patent owners of the entire interest or their representative(s) are required. If more than one signature is required, submit multiple forms, check the box below, and identify the total number of forms submitted in the blank below.

☑ A total of 1 forms are submitted.

This collection of information is required by 37 CFR 1.31, 1.32, and 1.33. The information is required to obtain or retain a benefit by the public, which is to update (and by the USPTO to process) the file of a patent or reexamination proceeding. Confidentiality is governed by 35 U.S.C. 122 and 37 CFR 1.14. This collection is estimated to take 3 minutes to complete, including gathering, preparing, and submitting the completed application form to the USPTO. Time will vary depending upon the individual case. Any comments on the amount of time you require to complete this form and/or suggestions for reducing this burden, should be sent to the Chief Information Officer, U.S. Patent and Trademark Office, U.S. Department of Commerce, P.O. Box 1450, Alexandria, VA 22313-1450. DO NOT SEND FEES OR COMPLETED FORMS TO THIS ADDRESS. **SEND TO: Commissioner for Patents, P.O. Box 1450, Alexandria, VA 22313-1450.**

If you need assistance in completing the form, call 1-800-PTO-9199 and select option 2.

UNITED STATES
PATENT AND TRADEMARK OFFICE

P.O. Box 1450
Alexandria, VA 22313 - 1450
www.uspto.gov

ELECTRONIC ACKNOWLEDGEMENT RECEIPT

APPLICATION #	RECEIPT DATE / TIME	ATTORNEY DOCKET #
11/768,892	**05/25/2023 01:57:54 PM ET**	**09685.0045-00000**

Title of Invention

METHODS AND SYSTEMS FOR UPDATING IN-GAME CONTENT

Application Information

APPLICATION TYPE	Utility - Nonprovisional Application under 35 USC 111(a)	PATENT #	9731202
CONFIRMATION #	3817	FILED BY	Linda Clark
PATENT CENTER #	62155154	FILING DATE	06/26/2007
CUSTOMER #	22852	FIRST NAMED INVENTOR	Joshua Hartwell
CORRESPONDENCE ADDRESS	-	AUTHORIZED BY	Matthew Karas

Documents

TOTAL DOCUMENTS: 7

DOCUMENT	PAGES	DESCRIPTION	SIZE (KB)
09685_0045-00000_Statement_by_FlipPhone_in_Support_of_Request_Under_37_C_F_R__1_324-signed.pdf	1	Request for Certificate of Correction	137 KB
09685_0045-00000_Statement_of_Current_Inventor_in_Support_of_Request_Under_37_C_F_R__1_324-signe.pdf	1	Request for Certificate of Correction	135 KB
09685_0045-00000_Statement_by_New_Inventor_in_Support_of_Requ	1	Request for Certificate of Correction	148 KB

est_Under_37_C_F_R__1_324.pdf			
09685_0045-00000_POA81A-signed.pdf	1	Power of Attorney	160 KB
09685_0045-00000_3_73c_Statement.pdf	5	Assignee showing of ownership per 37 CFR 3.73	276 KB
09685_0045-00000_Request_Under_37_C_F_R__1_324.pdf	2	Request for Certificate of Correction	147 KB
09685_0045-00000_Certificate_of_Correction.pdf	1	Request for Certificate of Correction	100 KB

Digest

DOCUMENT	MESSAGE DIGEST(SHA-512)
09685_0045-00000_Statement_by_FlipPhone_in_Support_of_Request_Under_37_C_F_R__1_324-signed.pdf	4B87D9D848FE2AE9A31F709D0A7D786C594148C6011D061965389487AA349E7A6AC66AD55B57F7E12CA2DCD93425E0EF39BFD5F302D9FF6D8EF9A4589F795BAA
09685_0045-00000_Statement_of_Current_Inventor_in_Support_of_Request_Under_37_C_F_R__1_324-signe.pdf	D38994A1AC98B9639B157C013C820DEB09E192E6B18E03F5EFBC049EB46DD2721492FB83B11CBF30BF8CFED890E7566C7178DFFEAEF1239DB449960B07B7A94A
09685_0045-00000_Statement_by_New_Inventor_in_Support_of_Request_Under_37_C_F_R__1_324.pdf	34D6C489A9A247BE1DF96DBEB659343553189A670EF795A6DF2321B5655E718EDEE358EA6386FB03A54E05A81D2397A5674591E4A603B5DD746C5EDB92AFA503

09685_0045-00000_POA81A-signed.pdf	E1F84B9FBEF5EC346ED79DEAC531259B27A5360240B5A40709451EE2C775429C8EE320B70CB8D9E7B90B50DED2A8B4FAF798FFDFDD80FFC73E13E49367358623
09685_0045-00000_3_73c_Statement.pdf	EE3CF7EF5F7929666C3386D84CD767AF69C038DE4386AC220D7A8FB39BEEF9CA1D1D28DFC6B4D199138C381FEEBABDD3E34E71C74D02C4F63A35FD92E5093109
09685_0045-00000_Request_Under_37_C_F_R__1_324.pdf	7646E3E4AAC0C678663BF34C432826F3712071B63E18C3D01E4687AC8DFDE6795C5CC6CE2E24C113FB0C3BA8C52A463B8B0D220B946D15AD93DA651E72DFDCA1
09685_0045-00000_Certificate_of_Correction.pdf	F6663EC040569C35A11337C8A38D70698215A5BBADA67CC3619B1ECEC11B101AD3694A5F59B2097EA99BE5085C7D2BBA3751148222B87DF6418EA2F65301C540

This Acknowledgement Receipt evidences receipt on the noted date by the USPTO of the indicated documents, characterized by the applicant, and including page counts, where applicable. It serves as evidence of receipt similar to a Post Card, as described in MPEP 503.

New Applications Under 35 U.S.C. 111

If a new application is being filed and the application includes the necessary components for filing date (see 37 CFR 1.53(b)-(d) and MPEP 506), a Filing Receipt (37 CFR 1.54) will be issued in due course and the date shown on this Acknowledgement Receipt will establish the filing date of the application

National Stage of an International Application under 35 U.S.C. 371

If a timely submission to enter the national stage of an international application is compliant with the conditions of 35 U.S.C. 371 and other applicable requirements a Form PCT/DO/EO/903 indicating acceptance of the application as a national stage submission under 35 U.S.C. 371 will be issued in addition to the Filing Receipt, in due course.

New International Application Filed with the USPTO as a Receiving Office

If a new international application is being filed and the international application includes the necessary components for an international filing date (see PCT Article 11 and MPEP 1810), a Notification of the International Application Number and of the International Filing Date (Form PCT/RO/105) will be issued in due course, subject to prescriptions concerning national security, and the date shown on this Acknowledgement Receipt will establish the international filing date of the application.

UNITED STATES PATENT AND TRADEMARK OFFICE

UNITED STATES DEPARTMENT OF COMMERCE
United States Patent and Trademark Office
Address: COMMISSIONER FOR PATENTS
P.O. Box 1450
Alexandria, Virginia 22313-1450
www.uspto.gov

APPLICATION NO.	ISSUE DATE	PATENT NO.	ATTORNEY DOCKET NO.	CONFIRMATION NO.
11/768,892	08/15/2017	9731202	09685.0045-00000	3817

22852 7590 07/26/2017
FINNEGAN, HENDERSON, FARABOW, GARRETT & DUNNER LLP
901 NEW YORK AVENUE, NW
WASHINGTON, DC 20001-4413

ISSUE NOTIFICATION

The projected patent number and issue date are specified above.

Determination of Patent Term Adjustment under 35 U.S.C. 154 (b)
(application filed on or after May 29, 2000)

The Patent Term Adjustment is 3183 day(s). Any patent to issue from the above-identified application will include an indication of the adjustment on the front page.

If a Continued Prosecution Application (CPA) was filed in the above-identified application, the filing date that determines Patent Term Adjustment is the filing date of the most recent CPA.

Applicant will be able to obtain more detailed information by accessing the Patent Application Information Retrieval (PAIR) WEB site (http://pair.uspto.gov).

Any questions regarding the Patent Term Extension or Adjustment determination should be directed to the Office of Patent Legal Administration at (571)-272-7702. Questions relating to issue and publication fee payments should be directed to the Application Assistance Unit (AAU) of the Office of Data Management (ODM) at (571)-272-4200.

APPLICANT(s) (Please see PAIR WEB site http://pair.uspto.gov for additional applicants):

Joshua Hartwell, Santa Monica, CA;

The United States represents the largest, most dynamic marketplace in the world and is an unparalleled location for business investment, innovation, and commercialization of new technologies. The USA offers tremendous resources and advantages for those who invest and manufacture goods here. Through SelectUSA, our nation works to encourage and facilitate business investment. To learn more about why the USA is the best country in the world to develop technology, manufacture products, and grow your business, visit SelectUSA.gov.

PATENT
Customer No. 22,852
Attorney Docket No. 09685.0045-00000

IN THE UNITED STATES PATENT AND TRADEMARK OFFICE

In re Application of:	)
Joshua HARTWELL	) Group Art Unit: 2649
Application No.: 11/768,892	) Examiner: Hsinchun Liao
Filed: June 26, 2007	) Confirmation No.: 3817
For: METHODS AND SYSTEMS FOR UPDATING IN-GAME CONTENT	)

Commissioner for Patents
P.O. Box 1450
Alexandria, VA 22313-1450

VIA EFS-WEB

Commissioner:

FEE ADDRESS FOR MAINTENANCE FEE PURPOSES IN ACCORDANCE WITH 37 C.F.R. 1.363

In accordance with the provisions of 37 C.F.R. 1.363, the fee address set forth below is being supplied for purposes of receiving notices, receipts, and other correspondence relating to the payment of maintenance fees:

GOSUB 60, Inc.
1334 Third Street Promenade
Suite 300
Santa Monica, California 90401

Payor No.: 121879

Respectfully submitted,

FINNEGAN, HENDERSON, FARABOW,
GARRETT & DUNNER, L.L.P.

Dated: July 12, 2017

By: _____
Kevin D. Rodkey
Reg. No. 65,506

PART B - FEE(S) TRANSMITTAL

Complete and send this form, together with applicable fee(s), to: Mail Mail Stop ISSUE FEE
Commissioner for Patents
P.O. Box 1450
Alexandria, Virginia 22313-1450
or Fax (571)-273-2885

INSTRUCTIONS: This form should be used for transmitting the ISSUE FEE and PUBLICATION FEE (if required). Blocks 1 through 5 should be completed where appropriate. All further correspondence including the Patent, advance orders and notification of maintenance fees will be mailed to the current correspondence address as indicated unless corrected below or directed otherwise in Block 1, by (a) specifying a new correspondence address; and/or (b) indicating a separate "FEE ADDRESS" for maintenance fee notifications.

CURRENT CORRESPONDENCE ADDRESS (Note: Use Block 1 for any change of address)

22852 7590 04/27/2017
FINNEGAN, HENDERSON, FARABOW, GARRETT & DUNNER LLP
901 NEW YORK AVENUE, NW
WASHINGTON, DC 20001-4413

Note: A certificate of mailing can only be used for domestic mailings of the Fee(s) Transmittal. This certificate cannot be used for any other accompanying papers. Each additional paper, such as an assignment or formal drawing, must have its own certificate of mailing or transmission.

Certificate of Mailing or Transmission
I hereby certify that this Fee(s) Transmittal is being deposited with the United States Postal Service with sufficient postage for first class mail in an envelope addressed to the Mail Stop ISSUE FEE address above, or being facsimile transmitted to the USPTO (571) 273-2885, on the date indicated below.

(Depositor's name)
(Signature)
(Date)

APPLICATION NO.	FILING DATE	FIRST NAMED INVENTOR	ATTORNEY DOCKET NO.	CONFIRMATION NO.
11/768,892	06/26/2007	Joshua Hartwell	09685.0045-00000	3817

TITLE OF INVENTION: METHODS AND SYSTEMS FOR UPDATING IN-GAME CONTENT

APPLN. TYPE	ENTITY STATUS	ISSUE FEE DUE	PUBLICATION FEE DUE	PREV. PAID ISSUE FEE	TOTAL FEE(S) DUE	DATE DUE
nonprovisional	UNDISCOUNTED	$960	$0	$0	$960	07/27/2017

EXAMINER	ART UNIT	CLASS-SUBCLASS
LIAO, HSINCHUN	2649	455-066100

1. Change of correspondence address or indication of "Fee Address" (37 CFR 1.363).
☐ Change of correspondence address (or Change of Correspondence Address form PTO/SB/122) attached.
☒ "Fee Address" indication (or "Fee Address" Indication form PTO/SB/47; Rev 03-02 or more recent) attached. Use of a Customer Number is required.

2. For printing on the patent front page, list
(1) The names of up to 3 registered patent attorneys or agents OR, alternatively,
(2) The name of a single firm (having as a member a registered attorney or agent) and the names of up to 2 registered patent attorneys or agents. If no name is listed, no name will be printed.

1 FINNEGAN, HENDERSON,
2 FARABOW, GARRETT &
3 DUNNER, L.L.P.

3. ASSIGNEE NAME AND RESIDENCE DATA TO BE PRINTED ON THE PATENT (print or type)

PLEASE NOTE: Unless an assignee is identified below, no assignee data will appear on the patent. If an assignee is identified below, the document has been filed for recordation as set forth in 37 CFR 3.11. Completion of this form is NOT a substitute for filing an assignment.

(A) NAME OF ASSIGNEE: GOSUB 60, INC.

(B) RESIDENCE: (CITY and STATE OR COUNTRY): SANTA MONICA, CALIFORNIA

Please check the appropriate assignee category or categories (will not be printed on the patent): ☐ Individual ☒ Corporation or other private group entity ☐ Government

4a. The following fee(s) are submitted:
☒ Issue Fee
☐ Publication Fee (No small entity discount permitted)
☐ Advance Order - # of Copies .....

4b. Payment of Fee(s): **(Please first reapply any previously paid issue fee shown above)**
☐ A check is enclosed.
☒ Payment by credit card. Form PTO-2038 is attached.
☒ The director is hereby authorized to charge the 06-0916 (s), any deficiency, or credits any overpayment, to Deposit Account Number ..... (enclose an extra copy of this form).

5. **Change in Entity Status** (from status indicated above)
☐ Applicant certifying micro entity status. See 37 CFR 1.29 — NOTE: Absent a valid certification of Micro Entity Status (see forms PTO/SB/15A and 15B), issue fee payment in the micro entity amount will not be accepted at the risk of application abandonment.
☐ Applicant asserting small entity status. See 37 CFR 1.27 — NOTE: If the application was previously under micro entity status, checking this box will be taken to be a notification of loss of entitlement to micro entity status.
☐ Applicant changing to regular undiscounted fee status — NOTE: Checking this box will be taken to be a notification of loss of entitlement to small or micro entity status, as applicable.

NOTE: This form must be signed in accordance with 37 CFR 1.31 and 1.33. See 37 CFR 1.4 for signature requirements and certifications.

Authorized Signature ..... Date July 12, 2017
Kevin D. Rodkey
Typed or printed name ..... Registration No. 65,506

PTOL-85 Part B (10-13) Approved for use through 10/31/2013. OMB 0651-0033 U.S. Patent and Trademark Office; U.S. DEPARTMENT OF COMMERCE

Electronic Patent Application Fee Transmittal

Application Number:	11768892
Filing Date:	26-Jun-2007
Title of Invention:	METHODS AND SYSTEMS FOR UPDATING IN-GAME CONTENT
First Named Inventor/Applicant Name:	Joshua Hartwell
Filer:	Kevin Dale Rodkey/Sharon R. Horton
Attorney Docket Number:	09685.0045-00000

Filed as Large Entity

Filing Fees for Utility under 35 USC 111(a)

Description	Fee Code	Quantity	Amount	Sub-Total in USD($)
Basic Filing:				
Pages:				
Claims:				
Miscellaneous-Filing:				
Petition:				
Patent-Appeals-and-Interference:				
Post-Allowance-and-Post-Issuance:				
UTILITY APPL ISSUE FEE	1501	1	960	960

Description	Fee Code	Quantity	Amount	Sub-Total in USD($)
Extension-of-Time:				
Miscellaneous:				
			Total in USD ($)	**960**

Electronic Acknowledgement Receipt

EFS ID:	29758569
Application Number:	11768892
International Application Number:	
Confirmation Number:	3817
Title of Invention:	METHODS AND SYSTEMS FOR UPDATING IN-GAME CONTENT
First Named Inventor/Applicant Name:	Joshua Hartwell
Customer Number:	22852
Filer:	Kevin Dale Rodkey/Sharon R. Horton
Filer Authorized By:	Kevin Dale Rodkey
Attorney Docket Number:	09685.0045-00000
Receipt Date:	12-JUL-2017
Filing Date:	26-JUN-2007
Time Stamp:	12:51:51
Application Type:	Utility under 35 USC 111(a)

Payment information:

Submitted with Payment	yes
Payment Type	CARD
Payment was successfully received in RAM	$960
RAM confirmation Number	071217INTEFSW12524900
Deposit Account	
Authorized User	

The Director of the USPTO is hereby authorized to charge indicated fees and credit any overpayment as follows:

File Listing:

Document Number	Document Description	File Name	File Size(Bytes)/ Message Digest	Multi Part /.zip	Pages (if appl.)
1		09685_0045_-_Fee_Address_for_Maintenance_Fee_and_Issue_Fee_Transmittal_07_12_2017.pdf	164323 64c291bf4b97c77cb897940d9989fb09b53fe375	yes	2

Multipart Description/PDF files in .zip description		
Document Description	**Start**	**End**
Maintenance Fee Address Change	1	1
Issue Fee Payment (PTO-85B)	2	2

Warnings:

Information:

2	Fee Worksheet (SB06)	fee-info.pdf	30554 6d09916113dc6ba23a6a0ea9b33fbd5810383d1c	no	2

Warnings:

Information:

Total Files Size (in bytes):	194877

This Acknowledgement Receipt evidences receipt on the noted date by the USPTO of the indicated documents, characterized by the applicant, and including page counts, where applicable. It serves as evidence of receipt similar to a Post Card, as described in MPEP 503.

<u>New Applications Under 35 U.S.C. 111</u>
If a new application is being filed and the application includes the necessary components for a filing date (see 37 CFR 1.53(b)-(d) and MPEP 506), a Filing Receipt (37 CFR 1.54) will be issued in due course and the date shown on this Acknowledgement Receipt will establish the filing date of the application.
<u>National Stage of an International Application under 35 U.S.C. 371</u>
If a timely submission to enter the national stage of an international application is compliant with the conditions of 35 U.S.C. 371 and other applicable requirements a Form PCT/DO/EO/903 indicating acceptance of the application as a national stage submission under 35 U.S.C. 371 will be issued in addition to the Filing Receipt, in due course.
<u>New International Application Filed with the USPTO as a Receiving Office</u>
If a new international application is being filed and the international application includes the necessary components for an international filing date (see PCT Article 11 and MPEP 1810), a Notification of the International Application Number and of the International Filing Date (Form PCT/RO/105) will be issued in due course, subject to prescriptions concerning national security, and the date shown on this Acknowledgement Receipt will establish the international filing date of the application.

UNITED STATES PATENT AND TRADEMARK OFFICE

UNITED STATES DEPARTMENT OF COMMERCE
United States Patent and Trademark Office
Address: COMMISSIONER FOR PATENTS
P.O. Box 1450
Alexandria, Virginia 22313-1450
www.uspto.gov

NOTICE OF ALLOWANCE AND FEE(S) DUE

22852 7590 04/27/2017
FINNEGAN, HENDERSON, FARABOW, GARRETT & DUNNER LLP
901 NEW YORK AVENUE, NW
WASHINGTON, DC 20001-4413

EXAMINER
LIAO, HSINCHUN

ART UNIT	PAPER NUMBER
2649	

DATE MAILED: 04/27/2017

APPLICATION NO.	FILING DATE	FIRST NAMED INVENTOR	ATTORNEY DOCKET NO.	CONFIRMATION NO.
11/768,892	06/26/2007	Joshua Hartwell	09685.0045-00000	3817

TITLE OF INVENTION: METHODS AND SYSTEMS FOR UPDATING IN-GAME CONTENT

APPLN. TYPE	ENTITY STATUS	ISSUE FEE DUE	PUBLICATION FEE DUE	PREV. PAID ISSUE FEE	TOTAL FEE(S) DUE	DATE DUE
nonprovisional	UNDISCOUNTED	$960	$0	$0	$960	07/27/2017

THE APPLICATION IDENTIFIED ABOVE HAS BEEN EXAMINED AND IS ALLOWED FOR ISSUANCE AS A PATENT. PROSECUTION ON THE MERITS IS CLOSED. THIS NOTICE OF ALLOWANCE IS NOT A GRANT OF PATENT RIGHTS. THIS APPLICATION IS SUBJECT TO WITHDRAWAL FROM ISSUE AT THE INITIATIVE OF THE OFFICE OR UPON PETITION BY THE APPLICANT. SEE 37 CFR 1.313 AND MPEP 1308.

THE ISSUE FEE AND PUBLICATION FEE (IF REQUIRED) MUST BE PAID WITHIN THREE MONTHS FROM THE MAILING DATE OF THIS NOTICE OR THIS APPLICATION SHALL BE REGARDED AS ABANDONED. THIS STATUTORY PERIOD CANNOT BE EXTENDED. SEE 35 U.S.C. 151. THE ISSUE FEE DUE INDICATED ABOVE DOES NOT REFLECT A CREDIT FOR ANY PREVIOUSLY PAID ISSUE FEE IN THIS APPLICATION. IF AN ISSUE FEE HAS PREVIOUSLY BEEN PAID IN THIS APPLICATION (AS SHOWN ABOVE), THE RETURN OF PART B OF THIS FORM WILL BE CONSIDERED A REQUEST TO REAPPLY THE PREVIOUSLY PAID ISSUE FEE TOWARD THE ISSUE FEE NOW DUE.

HOW TO REPLY TO THIS NOTICE:

I. Review the ENTITY STATUS shown above. If the ENTITY STATUS is shown as SMALL or MICRO, verify whether entitlement to that entity status still applies.

If the ENTITY STATUS is the same as shown above, pay the TOTAL FEE(S) DUE shown above.

If the ENTITY STATUS is changed from that shown above, on PART B - FEE(S) TRANSMITTAL, complete section number 5 titled "Change in Entity Status (from status indicated above)".

For purposes of this notice, small entity fees are 1/2 the amount of undiscounted fees, and micro entity fees are 1/2 the amount of small entity fees.

II. PART B - FEE(S) TRANSMITTAL, or its equivalent, must be completed and returned to the United States Patent and Trademark Office (USPTO) with your ISSUE FEE and PUBLICATION FEE (if required). If you are charging the fee(s) to your deposit account, section "4b" of Part B - Fee(s) Transmittal should be completed and an extra copy of the form should be submitted. If an equivalent of Part B is filed, a request to reapply a previously paid issue fee must be clearly made, and delays in processing may occur due to the difficulty in recognizing the paper as an equivalent of Part B.

III. All communications regarding this application must give the application number. Please direct all communications prior to issuance to Mail Stop ISSUE FEE unless advised to the contrary.

IMPORTANT REMINDER: Utility patents issuing on applications filed on or after Dec. 12, 1980 may require payment of maintenance fees. It is patentee's responsibility to ensure timely payment of maintenance fees when due.

PTOL-85 (Rev. 02/11)

PART B - FEE(S) TRANSMITTAL

Complete and send this form, together with applicable fee(s), to: Mail **Mail Stop ISSUE FEE**
Commissioner for Patents
P.O. Box 1450
Alexandria, Virginia 22313-1450
or Fax (571)-273-2885

INSTRUCTIONS: This form should be used for transmitting the ISSUE FEE and PUBLICATION FEE (if required). Blocks 1 through 5 should be completed where appropriate. All further correspondence including the Patent, advance orders and notification of maintenance fees will be mailed to the current correspondence address as indicated unless corrected below or directed otherwise in Block 1, by (a) specifying a new correspondence address; and/or (b) indicating a separate "FEE ADDRESS" for maintenance fee notifications.

CURRENT CORRESPONDENCE ADDRESS (Note: Use Block 1 for any change of address)

22852 7590 04/27/2017
FINNEGAN, HENDERSON, FARABOW, GARRETT & DUNNER LLP
901 NEW YORK AVENUE, NW
WASHINGTON, DC 20001-4413

Note: A certificate of mailing can only be used for domestic mailings of the Fee(s) Transmittal. This certificate cannot be used for any other accompanying papers. Each additional paper, such as an assignment or formal drawing, must have its own certificate of mailing or transmission.

Certificate of Mailing or Transmission

I hereby certify that this Fee(s) Transmittal is being deposited with the United States Postal Service with sufficient postage for first class mail in an envelope addressed to the Mail Stop ISSUE FEE address above, or being facsimile transmitted to the USPTO (571) 273-2885, on the date indicated below.

(Depositor's name)
(Signature)
(Date)

APPLICATION NO.	FILING DATE	FIRST NAMED INVENTOR	ATTORNEY DOCKET NO.	CONFIRMATION NO.
11/768,892	06/26/2007	Joshua Hartwell	09685.0045-00000	3817

TITLE OF INVENTION: METHODS AND SYSTEMS FOR UPDATING IN-GAME CONTENT

APPLN. TYPE	ENTITY STATUS	ISSUE FEE DUE	PUBLICATION FEE DUE	PREV. PAID ISSUE FEE	TOTAL FEE(S) DUE	DATE DUE
nonprovisional	UNDISCOUNTED	$960	$0	$0	$960	07/27/2017

EXAMINER	ART UNIT	CLASS-SUBCLASS
LIAO, HSINCHUN	2649	455-066100

1. Change of correspondence address or indication of "Fee Address" (37 CFR 1.363).
- ❑ Change of correspondence address (or Change of Correspondence Address form PTO/SB/122) attached.
- ❑ "Fee Address" indication (or "Fee Address" Indication form PTO/SB/47; Rev 03-02 or more recent) attached. **Use of a Customer Number is required.**

2. For printing on the patent front page, list
(1) The names of up to 3 registered patent attorneys or agents OR, alternatively,
(2) The name of a single firm (having as a member a registered attorney or agent) and the names of up to 2 registered patent attorneys or agents. If no name is listed, no name will be printed.

1 _____
2 _____
3 _____

3. ASSIGNEE NAME AND RESIDENCE DATA TO BE PRINTED ON THE PATENT (print or type)

PLEASE NOTE: Unless an assignee is identified below, no assignee data will appear on the patent. If an assignee is identified below, the document has been filed for recordation as set forth in 37 CFR 3.11. Completion of this form is NOT a substitute for filing an assignment.

(A) NAME OF ASSIGNEE (B) RESIDENCE: (CITY and STATE OR COUNTRY)

Please check the appropriate assignee category or categories (will not be printed on the patent) : ❑ Individual ❑ Corporation or other private group entity ❑ Government

4a. The following fee(s) are submitted:
- ❑ Issue Fee
- ❑ Publication Fee (No small entity discount permitted)
- ❑ Advance Order - # of Copies _____

4b. Payment of Fee(s): (**Please first reapply any previously paid issue fee shown above**)
- ❑ A check is enclosed.
- ❑ Payment by credit card. Form PTO-2038 is attached.
- ❑ The director is hereby authorized to charge the required fee(s), any deficiency, or credits any overpayment, to Deposit Account Number _____ (enclose an extra copy of this form).

5. **Change in Entity Status** (from status indicated above)
- ❑ Applicant certifying micro entity status. See 37 CFR 1.29 — NOTE: Absent a valid certification of Micro Entity Status (see forms PTO/SB/15A and 15B), issue fee payment in the micro entity amount will not be accepted at the risk of application abandonment.
- ❑ Applicant asserting small entity status. See 37 CFR 1.27 — NOTE: If the application was previously under micro entity status, checking this box will be taken to be a notification of loss of entitlement to micro entity status.
- ❑ Applicant changing to regular undiscounted fee status. — NOTE: Checking this box will be taken to be a notification of loss of entitlement to small or micro entity status, as applicable.

NOTE: This form must be signed in accordance with 37 CFR 1.31 and 1.33. See 37 CFR 1.4 for signature requirements and certifications.

Authorized Signature _____ Date _____

Typed or printed name _____ Registration No. _____

Playrix Ex. 1002, Page 28 of 348

UNITED STATES DEPARTMENT OF COMMERCE
United States Patent and Trademark Office
Address: COMMISSIONER FOR PATENTS
P.O. Box 1450
Alexandria, Virginia 22313-1450
www.uspto.gov

APPLICATION NO.	FILING DATE	FIRST NAMED INVENTOR	ATTORNEY DOCKET NO.	CONFIRMATION NO.
11/768,892	06/26/2007	Joshua Hartwell	09685.0045-00000	3817

22852 7590 04/27/2017
FINNEGAN, HENDERSON, FARABOW, GARRETT & DUNNER LLP
901 NEW YORK AVENUE, NW
WASHINGTON, DC 20001-4413

EXAMINER
LIAO, HSINCHUN

ART UNIT	PAPER NUMBER
2649	

DATE MAILED: 04/27/2017

Determination of Patent Term Adjustment under 35 U.S.C. 154 (b)
(Applications filed on or after May 29, 2000)

The Office has discontinued providing a Patent Term Adjustment (PTA) calculation with the Notice of Allowance.

Section 1(h)(2) of the AIA Technical Corrections Act amended 35 U.S.C. 154(b)(3)(B)(i) to eliminate the requirement that the Office provide a patent term adjustment determination with the notice of allowance. See Revisions to Patent Term Adjustment, 78 Fed. Reg. 19416, 19417 (Apr. 1, 2013). Therefore, the Office is no longer providing an initial patent term adjustment determination with the notice of allowance. The Office will continue to provide a patent term adjustment determination with the Issue Notification Letter that is mailed to applicant approximately three weeks prior to the issue date of the patent, and will include the patent term adjustment on the patent. Any request for reconsideration of the patent term adjustment determination (or reinstatement of patent term adjustment) should follow the process outlined in 37 CFR 1.705.

Any questions regarding the Patent Term Extension or Adjustment determination should be directed to the Office of Patent Legal Administration at (571)-272-7702. Questions relating to issue and publication fee payments should be directed to the Customer Service Center of the Office of Patent Publication at 1-(888)-786-0101 or (571)-272-4200.

OMB Clearance and PRA Burden Statement for PTOL-85 Part B

The Paperwork Reduction Act (PRA) of 1995 requires Federal agencies to obtain Office of Management and Budget approval before requesting most types of information from the public. When OMB approves an agency request to collect information from the public, OMB (i) provides a valid OMB Control Number and expiration date for the agency to display on the instrument that will be used to collect the information and (ii) requires the agency to inform the public about the OMB Control Number's legal significance in accordance with 5 CFR 1320.5(b).

The information collected by PTOL-85 Part B is required by 37 CFR 1.311. The information is required to obtain or retain a benefit by the public which is to file (and by the USPTO to process) an application. Confidentiality is governed by 35 U.S.C. 122 and 37 CFR 1.14. This collection is estimated to take 12 minutes to complete, including gathering, preparing, and submitting the completed application form to the USPTO. Time will vary depending upon the individual case. Any comments on the amount of time you require to complete this form and/or suggestions for reducing this burden, should be sent to the Chief Information Officer, U.S. Patent and Trademark Office, U.S. Department of Commerce, P.O. Box 1450, Alexandria, Virginia 22313-1450. DO NOT SEND FEES OR COMPLETED FORMS TO THIS ADDRESS. SEND TO: Commissioner for Patents, P.O. Box 1450, Alexandria, Virginia 22313-1450. Under the Paperwork Reduction Act of 1995, no persons are required to respond to a collection of information unless it displays a valid OMB control number.

Privacy Act Statement

The Privacy Act of 1974 (P.L. 93-579) requires that you be given certain information in connection with your submission of the attached form related to a patent application or patent. Accordingly, pursuant to the requirements of the Act, please be advised that: (1) the general authority for the collection of this information is 35 U.S.C. 2(b)(2); (2) furnishing of the information solicited is voluntary; and (3) the principal purpose for which the information is used by the U.S. Patent and Trademark Office is to process and/or examine your submission related to a patent application or patent. If you do not furnish the requested information, the U.S. Patent and Trademark Office may not be able to process and/or examine your submission, which may result in termination of proceedings or abandonment of the application or expiration of the patent.

The information provided by you in this form will be subject to the following routine uses:

1. The information on this form will be treated confidentially to the extent allowed under the Freedom of Information Act (5 U.S.C. 552) and the Privacy Act (5 U.S.C 552a). Records from this system of records may be disclosed to the Department of Justice to determine whether disclosure of these records is required by the Freedom of Information Act.
2. A record from this system of records may be disclosed, as a routine use, in the course of presenting evidence to a court, magistrate, or administrative tribunal, including disclosures to opposing counsel in the course of settlement negotiations.
3. A record in this system of records may be disclosed, as a routine use, to a Member of Congress submitting a request involving an individual, to whom the record pertains, when the individual has requested assistance from the Member with respect to the subject matter of the record.
4. A record in this system of records may be disclosed, as a routine use, to a contractor of the Agency having need for the information in order to perform a contract. Recipients of information shall be required to comply with the requirements of the Privacy Act of 1974, as amended, pursuant to 5 U.S.C. 552a(m).
5. A record related to an International Application filed under the Patent Cooperation Treaty in this system of records may be disclosed, as a routine use, to the International Bureau of the World Intellectual Property Organization, pursuant to the Patent Cooperation Treaty.
6. A record in this system of records may be disclosed, as a routine use, to another federal agency for purposes of National Security review (35 U.S.C. 181) and for review pursuant to the Atomic Energy Act (42 U.S.C. 218(c)).
7. A record from this system of records may be disclosed, as a routine use, to the Administrator, General Services, or his/her designee, during an inspection of records conducted by GSA as part of that agency's responsibility to recommend improvements in records management practices and programs, under authority of 44 U.S.C. 2904 and 2906. Such disclosure shall be made in accordance with the GSA regulations governing inspection of records for this purpose, and any other relevant (i.e., GSA or Commerce) directive. Such disclosure shall not be used to make determinations about individuals.
8. A record from this system of records may be disclosed, as a routine use, to the public after either publication of the application pursuant to 35 U.S.C. 122(b) or issuance of a patent pursuant to 35 U.S.C. 151. Further, a record may be disclosed, subject to the limitations of 37 CFR 1.14, as a routine use, to the public if the record was filed in an application which became abandoned or in which the proceedings were terminated and which application is referenced by either a published application, an application open to public inspection or an issued patent.
9. A record from this system of records may be disclosed, as a routine use, to a Federal, State, or local law enforcement agency, if the USPTO becomes aware of a violation or potential violation of law or regulation.

Notice of Allowability	Application No.	Applicant(s)	
	11/768,892	HARTWELL, JOSHUA	
	Examiner	Art Unit	
	HSIN-CHUN LIAO	2649	

-- The MAILING DATE of this communication appears on the cover sheet with the correspondence address--

All claims being allowable, PROSECUTION ON THE MERITS IS (OR REMAINS) CLOSED in this application. If not included herewith (or previously mailed), a Notice of Allowance (PTOL-85) or other appropriate communication will be mailed in due course. **THIS NOTICE OF ALLOWABILITY IS NOT A GRANT OF PATENT RIGHTS.** This application is subject to withdrawal from issue at the initiative of the Office or upon petition by the applicant. See 37 CFR 1.313 and MPEP 1308.

1. ☒ This communication is responsive to *02/02/2017*.

2. ☒ The allowed claim(s) is/are *15-19 and 32-35*.

3. ☐ Acknowledgment is made of a claim for foreign priority under 35 U.S.C. § 119(a)-(d) or (f).
   a) ☐ All b) ☐ Some* c) ☐ None of the:
      1. ☐ Certified copies of the priority documents have been received.
      2. ☐ Certified copies of the priority documents have been received in Application No. _____ .
      3. ☐ Copies of the certified copies of the priority documents have been received in this national stage application from the International Bureau (PCT Rule 17.2(a)).

   * Certified copies not received: _____.

Applicant has THREE MONTHS FROM THE "MAILING DATE" of this communication to file a reply complying with the requirements noted below. Failure to timely comply will result in ABANDONMENT of this application.
THIS THREE-MONTH PERIOD IS NOT EXTENDABLE.

4. ☐ A SUBSTITUTE OATH OR DECLARATION must be submitted. Note the attached EXAMINER'S AMENDMENT or NOTICE OF INFORMAL PATENT APPLICATION (PTO-152) which gives reason(s) why the oath or declaration is deficient.

5. ☐ CORRECTED DRAWINGS (as "replacement sheets") must be submitted.
   (a) ☐ including changes required by the Notice of Draftsperson's Patent Drawing Review (PTO-948) attached
      1) ☐ hereto or 2) ☐ to Paper No./Mail Date _____.
   (b) ☐ including changes required by the attached Examiner's Amendment / Comment or in the Office action of Paper No./Mail Date _____.

   Identifying indicia such as the application number (see 37 CFR 1.84(c)) should be written on the drawings in the front (not the back) of each sheet. Replacement sheet(s) should be labeled as such in the header according to 37 CFR 1.121(d).

6. ☐ DEPOSIT OF and/or INFORMATION about the deposit of BIOLOGICAL MATERIAL must be submitted. Note the attached Examiner's comment regarding REQUIREMENT FOR THE DEPOSIT OF BIOLOGICAL MATERIAL.

Attachment(s)

1. ☐ Notice of References Cited (PTO-892)
2. ☐ Notice of Draftperson's Patent Drawing Review (PTO-948)
3. ☐ Information Disclosure Statements (PTO/SB/08), Paper No./Mail Date _____
4. ☐ Examiner's Comment Regarding Requirement for Deposit of Biological Material
5. ☐ Notice of Informal Patent Application
6. ☐ Interview Summary (PTO-413), Paper No./Mail Date _____ .
7. ☐ Examiner's Amendment/Comment
8. ☒ Examiner's Statement of Reasons for Allowance
9. ☐ Other _____.

/HSIN-CHUN LIAO/
Primary Examiner, Art Unit 2649

1. The present application is being examined under the pre-AIA first to invent provisions.

REASONS FOR ALLOWANCE

1. Please see the Appeal Brief (04/20/2015) and Appeal Board Decision (02/02/2017).

Any comments considered necessary by applicant must be submitted no later than the payment of the issue fee and, to avoid processing delays, should preferably accompany the issue fee. Such submissions should be clearly labeled "Comments on Statement of Reasons for Allowance."

Conclusion

Any inquiry concerning this communication or earlier communications from the examiner should be directed to HSIN-CHUN LIAO whose telephone number is (571)270-7701. The examiner can normally be reached on Monday - Thursday, 8:00AM-4:00PM.

Examiner interviews are available via telephone, in-person, and video conferencing using a USPTO supplied web-based collaboration tool. To schedule an interview, applicant is encouraged to use the USPTO Automated Interview Request (AIR) at http://www.uspto.gov/interviewpractice.

If attempts to reach the examiner by telephone are unsuccessful, the examiner's supervisor, Edward Urban can be reached on (571)272-7899. The fax phone number for the organization where this application or proceeding is assigned is 571-273-8300.

Information regarding the status of an application may be obtained from the Patent Application Information Retrieval (PAIR) system. Status information for published applications may be obtained from either Private PAIR or Public PAIR. Status information for unpublished applications is available through Private PAIR only. For more information about the PAIR system, see http://pair-direct.uspto.gov. Should you have questions on access to the Private PAIR system, contact the Electronic Business Center (EBC) at 866-217-9197 (toll-free). If you would like assistance from a USPTO Customer Service Representative or access to the automated information system, call 800-786-9199 (IN USA OR CANADA) or 571-272-1000.

/HSIN-CHUN LIAO/
Primary Examiner, Art Unit 2649

EAST Search History

EAST Search History (Interference)

Ref #	Hits	Search Query	DBs	Default Operator	Plurals	Time Stamp
L1	0	(mobile communication) and request and factor and (telecom service) and (video game content)	USPAT	ADJ	OFF	2017/04/21 17:18

4/21/2017 5:21:30 PM
C:\Users\hliao\Documents\EAST\Workspaces\11_cases\11768892\11768892.wsp

Issue Classification	Application/Control No.	Applicant(s)/Patent Under Reexamination
	11768892	HARTWELL, JOSHUA
	Examiner	**Art Unit**
	HSIN-CHUN LIAO	2649

CPC

Symbol					Type	Version
A63F		13	/	77	F	2014-09-02
A63F		13	/	332	I	2014-09-02
A63F		13	/	60	I	2014-09-02
A63F		13	/	12	I	2013-01-01
A63F		2300	/	406	A	2013-01-01
A63F		2300	/	552	A	2013-01-01
A63F		2300	/	6009	A	2013-01-01
			/			
			/			
			/			
			/			
			/			
			/			
			/			
			/			

CPC Combination Sets

Symbol					Type	Set	Ranking	Version
			/					
			/					

NONE (Assistant Examiner)	(Date)	**Total Claims Allowed:** 9	
/HSIN-CHUN LIAO/ Primary Examiner.Art Unit 2649 (Primary Examiner)	04/19/2017 (Date)	O.G. Print Claim(s) 15	O.G. Print Figure 1

Issue Classification	Application/Control No.	Applicant(s)/Patent Under Reexamination
	11768892	HARTWELL, JOSHUA
	Examiner	**Art Unit**
	HSIN-CHUN LIAO	2649

US ORIGINAL CLASSIFICATION		INTERNATIONAL CLASSIFICATION	
CLASS	SUBCLASS	CLAIMED	NON-CLAIMED
455	66.1	H 0 4 B 7 / 00 (2006.01.01)	

CROSS REFERENCE(S)					
CLASS	SUBCLASS (ONE SUBCLASS PER BLOCK)				
455	49.1				
725	62				

NONE		Total Claims Allowed:	
(Assistant Examiner)	(Date)	9	
/HSIN-CHUN LIAO/ Primary Examiner.Art Unit 2649	04/19/2017	O.G. Print Claim(s)	O.G. Print Figure
(Primary Examiner)	(Date)	15	1

Issue Classification	Application/Control No.	Applicant(s)/Patent Under Reexamination
	11768892	HARTWELL, JOSHUA
	Examiner	**Art Unit**
	HSIN-CHUN LIAO	2649

☐ Claims renumbered in the same order as presented by applicant ☐ CPA ☐ T.D. ☐ R.1.47

Final	Original	Final	Original	Final	Original	Final	Original	Final	Original	Final	Original	Final	Original	Final	Original
	1	3	17	7	33										
	2	4	18	8	34										
	3	5	19	9	35										
	4		20												
	5		21												
	6		22												
	7		23												
	8		24												
	9		25												
	10		26												
	11		27												
	12		28												
	13		29												
	14		30												
1	15		31												
2	16	6	32												

NONE (Assistant Examiner)	(Date)	**Total Claims Allowed:** 9	
/HSIN-CHUN LIAO/ Primary Examiner.Art Unit 2649 (Primary Examiner)	04/19/2017 (Date)	O.G. Print Claim(s) 15	O.G. Print Figure 1

Search Notes	Application/Control No.	Applicant(s)/Patent Under Reexamination
	11768892	HARTWELL, JOSHUA
	Examiner	**Art Unit**
	HSIN-CHUN LIAO	2618

CPC- SEARCHED

Symbol	Date	Examiner

CPC COMBINATION SETS - SEARCHED

Symbol	Date	Examiner

US CLASSIFICATION SEARCHED

Class	Subclass	Date	Examiner

SEARCH NOTES

Search Notes	Date	Examiner
Search updated.	4/21/2017	hl

INTERFERENCE SEARCH

US Class/ CPC Symbol	US Subclass / CPC Group	Date	Examiner
	Interference searched using EAST. See the attached EAST search notes.	4/21/2017	hl

UNITED STATES PATENT AND TRADEMARK OFFICE

UNITED STATES DEPARTMENT OF COMMERCE
United States Patent and Trademark Office
Address: COMMISSIONER FOR PATENTS
P.O. Box 1450
Alexandria, Virginia 22313-1450
www.uspto.gov

APPLICATION NO.	FILING DATE	FIRST NAMED INVENTOR	ATTORNEY DOCKET NO.	CONFIRMATION NO.
11/768,892	06/26/2007	Joshua Hartwell	09685.0045-00000	3817

22852 7590 02/02/2017
FINNEGAN, HENDERSON, FARABOW, GARRETT & DUNNER LLP
901 NEW YORK AVENUE, NW
WASHINGTON, DC 20001-4413

EXAMINER
LIAO, HSINCHUN

ART UNIT	PAPER NUMBER
2649	

NOTIFICATION DATE	DELIVERY MODE
02/02/2017	ELECTRONIC

Please find below and/or attached an Office communication concerning this application or proceeding.

The time period for reply, if any, is set in the attached communication.

Notice of the Office communication was sent electronically on above-indicated "Notification Date" to the following e-mail address(es):

regional-desk@finnegan.com

UNITED STATES PATENT AND TRADEMARK OFFICE

BEFORE THE PATENT TRIAL AND APPEAL BOARD

Ex parte JOSHUA HARTWELL

Appeal 2016-001779
Application 11/768,892[1]
Technology Center 2600

Before JOHNNY A. KUMAR, CATHERINE SHIANG, and
JOHN P. PINKERTON, *Administrative Patent Judges*.

PINKERTON, *Administrative Patent Judge*.

DECISION ON APPEAL

This is a decision on appeal under 35 U.S.C. § 134(a) of the Examiner's Final Rejection of claims 15–19 and 32–35, which constitute all the claims pending in this application. Claims 1–14 and 20–31 are canceled. We have jurisdiction under 35 U.S.C. § 6(b). We reverse.

We have reviewed Appellant's arguments in the Appeal Brief and Reply Brief, and the Examiner's response to Appellant's arguments. We concur with Appellant's argument that the Examiner erred in rejecting

---

[1] Appellant identifies GOSUB 60, Inc. as the real party in interest. App. Br. 3.

independent claim 15 under 35 U.S.C. § 102(b) as being anticipated by Willis[2] because Willis does not disclose, either expressly or inherently, the limitation "checking what updated video-game content to send based on one of the factors including a type of the mobile communication device, a telecom service associated with the mobile communication device, and a service provider of the telecom service," as recited in claim 15. App. Br. 7–10; Reply Br. 2–3.

In finding that Willis inherently discloses "checking what updated video-game content to send based on . . . a type of mobile communication device," the Examiner states the following:

> Willis discloses "***determine*** ad content to provide to the game console and an appropriate ADSP [advertisement service provider] for delivering of the ad content" (Willis Fig. 3 Item 304 paragraph 0034). Willis discloses "Examples of mobile video game platforms include N-Gage, from Nokia, SONY PSP, and Gizmondo. The geolocation of the mobile video game platform is optionally changed at any time including during game play" (Willis paragraph 0035). Therefore, Willis' arrangement provides advertising content to video games running in different mobile devices and different platforms. As explained in the office action, the content of software update is inherently adapted to/based on a type of mobile communication device/platform (e.g. i-phone or android mobile device). Otherwise, the mobile device would not be able to display the updated content properly.

Ans. 2–3.

We are persuaded by Appellant's arguments that the Examiner errs in finding Willis anticipates claim 15. "A claim is anticipated only if each and every element as set forth in the claim is found, either expressly or

[2] US 2006/0136297 A1; published June 22, 2006.

inherently described, in a single prior art reference." *Verdegaal Bros., Inc. v. Union Oil Co.*, 814 F.2d 628, 631 (Fed. Cir. 1987). "[A]nticipation by inherent disclosure is appropriate only when the reference discloses prior art that must necessarily include the unstated limitation . . . ." *Transclean Corp. v. Bridgewood Servs., Inc.*, 290 F.3d 1364, 1373 (Fed. Cir. 2002). "Inherency, however, may not be established by probabilities or possibilities. The mere fact that a certain thing may result from a given set of circumstances is not sufficient." *Cont'l Can Co. USA, Inc. v. Monsanto Co.*, 948 F.2d 1264, 1269 (Fed. Cir. 1991) (quoting *In re Oelrich*, 666 F.2d 578, 581 (CCPA 1981)).

Here, Appellant argues, and we agree, "Willis discloses that advertising content is sent based on the physical geographic location of the gamer." Reply Br. 2 (citing Willis ¶¶ 29–32). We also agree with Appellant's argument that the portion of Willis cited by the Examiner in the Answer makes clear that Willis' system "determin[es] advertising content to provide to the advertising enabled gaming platform, based on the determined location"—not based on the console type, as the Office appears to contend." *Id.* (citing Willis Fig. 3 (item 304)). Appellant also argues, and we agree, "[n]othing in Willis supports the [Examiner's finding] that the updated content is 'inherently adapted to/based on a type of mobile communication device/platform.'" *Id.* at 3. As Appellant further argues, "even if Willis' content were adapted prior to display on a mobile communication device, that content could be adapted by the mobile communication device, rather than by a separate device that provides or uploads the updated content to the mobile communication device, as required by Appellant's claims." *Id.* Thus, for the reasons argued by Appellant, we agree that "the claimed

subject matter not explicit in Willis also does not 'necessarily flow[] from the teachings of' that reference." *Id.* Accordingly, we do not sustain the rejection of claims 15–17 and 33–35 under 35 U.S.C. § 102(b), or the rejection of dependent claims 18, 19, and 32 under 35 U.S.C. § 103(a) because the Examiner relies on Willis in the same manner discussed above in the context of claim 15 and does not rely on the additional reference in any manner that remedies the deficiencies of the underlying anticipation rejection.

DECISION

We reverse the Examiner's decision rejecting claims 15–19 and 32–35.

REVERSED

UNITED STATES PATENT AND TRADEMARK OFFICE

UNITED STATES DEPARTMENT OF COMMERCE
United States Patent and Trademark Office
Address: COMMISSIONER FOR PATENTS
P.O. Box 1450
Alexandria, Virginia 22313-1450
www.uspto.gov

APPLICATION NO.	FILING DATE	FIRST NAMED INVENTOR	ATTORNEY DOCKET NO.	CONFIRMATION NO.
11/768,892	06/26/2007	Joshua Hartwell	09685.0045-00000	3817

22852 7590 12/14/2015
FINNEGAN, HENDERSON, FARABOW, GARRETT & DUNNER LLP
901 NEW YORK AVENUE, NW
WASHINGTON, DC 20001-4413

EXAMINER
LIAO, HSINCHUN

ART UNIT	PAPER NUMBER
2649	

NOTIFICATION DATE	DELIVERY MODE
12/14/2015	ELECTRONIC

Please find below and/or attached an Office communication concerning this application or proceeding.

The time period for reply, if any, is set in the attached communication.

Notice of the Office communication was sent electronically on above-indicated "Notification Date" to the following e-mail address(es):

regional-desk@finnegan.com

United States Patent and Trademark Office

Under Secretary of Commerce for Intellectual Property and
Director of the United States Patent and Trademark Office
P.O. Box 1450
Alexandria, Virginia 22313-1450
www.uspto.gov

FINNEGAN, HENDERSON, FARABOW,
GARRETT & DUNNER LLP
901 NEW YORK AVENUE, NW
WASHINGTON, DC 20001-4413

Appeal No: 2016-001779
Application: 11/768,892
Appellant: Joshua Hartwell

Patent Trial and Appeal Board Docketing Notice

Application 11/768,892 was received from the Technology Center at the Board on December 07, 2015 and has been assigned Appeal No: 2016-001779.

In all future communications regarding this appeal, please include both the application number and the appeal number.

The mailing address for the Board is:

PATENT TRIAL and APPEAL BOARD
UNITED STATES PATENT AND TRADEMARK OFFICE
P.O. BOX 1450
ALEXANDRIA, VIRGINIA 22313-1450

Telephone inquiries can be made by calling 571-272-9797 and referencing the appeal number listed above.

By order of the Patent Trial and Appeal Board.

AA

PATENT
Attorney Docket No. 09685.0045-00000

IN THE UNITED STATES PATENT AND TRADEMARK OFFICE

In re Application of:	)	
	)	
Joshua HARTWELL	)	Group Art Unit: 2649
	)	
Application No.: 11/768,892	)	Examiner: Hsinchun Liao
	)	
Filed: June 26, 2007	)	
	)	
For: METHODS AND SYSTEMS FOR UPDATING IN-GAME CONTENT	)	Confirmation No.: 3817

Attention: Mail Stop Appeal Brief-Patents
Commissioner for Patents
P.O. Box 1450
Alexandria, VA 22313-1450

Dear Commissioner:

REPLY BRIEF

In reply to the Examiner's Answer mailed October 1, 2015, Appellant submits the following reply in response to the Examiner's arguments. This Reply Brief is accompanied by a fee of $2,000 set forth in 37 C.F.R. § 41.20(b)(4) for forwarding the appeal to the Patent Trial and Appeal Board.

Appellant does not request an oral argument.

If any additional fees are required or if the enclosed payment is insufficient, Appellant requests that the required fees be charged to Deposit Account 06-0916.

REMARKS

Claims 15-17 and 33-35 are rejected under 35 U.S.C. § 102(b) (pre-AIA) as allegedly anticipated by U.S. Patent Publication No. 2006/0136297 ("*Willis*"). Further, claims 18, 19, and 32 are rejected under 35 U.S.C. § 103(a) as allegedly obvious over *Willis* in view of U.S. Patent Application Publication No. 2004/0127279 ("*Gatto*"). Contrary to the assertions in the Examiner's Answer, the asserted references fail to disclose or render obvious all elements of Appellant's claims.

I. Rejection of Claims 15-17 and 33-35 under 35 U.S.C. § 102(b)

Wills fails to disclose "checking what updated video-game content to send based on one of the factors including a type of the mobile communication device, a telecom service associated with the mobile communication device, and a service provider of the telecom service" for at least the reasons presented in Appellant's Appeal Brief. *See* Appeal Brief at 7-10. Rather, *Willis* discloses that advertising content is sent based on the physical geographic location of the gamer. *See id.*; *Willis* at ¶¶ [0029]-[0032].

In the Examiner's Answer, the Office asserts that "Willis discloses 'determine ad content to provide to the game console and an appropriate ADSP for delivering of the ad content.'" Examiner's Answer at 2 (citing *Willis* at ¶ [0034]; Fig. 3 (304)). The portion of *Willis* cited in the Examiner's Answer makes clear that *Willis*' system "determin[es] advertising content to provide to the advertising enabled gaming platform, **based on the determined location**"—not based on the console type, as the Office appears to contend. *Willis* at Fig. 3 (304) (emphasis added). As the Office notes, *Willis* lists exemplary video game platforms, such as N-Gage® from Nokia®, SONY PSP®, and

Gizmondo™. *Willis* at ¶ [0035]. But *Willis* does not disclose "checking what updated video-game content to send" based on the console type.

Recognizing this deficiency, the Office suggests that the above-discussed subject matter of Appellant's claims is inherently disclosed by *Willis*, stating:

> [T]he content of software update is inherently adapted to/based on a type of mobile communication device/platform (e.g. i-phone or android mobile device). Otherwise, the mobile device would not be able to display the updated content properly. Since Willis discloses determining advertising content to provide to the game console, providing updated advertising content to different types of mobile communication devices/platforms and the advertising is inherently based on a type of mobile communication device/platform . . . .

Examiner's Answer at 3. Nothing in *Willis* supports the Office's assertion that the updated content is "inherently adapted to/based on a type of mobile communication device/platform." One of ordinary skill in the art would readily understand that, even if *Willis*' content were adapted prior to display on a mobile communication device, that content could be adapted by the mobile communication device, rather than by a separate device that provides or uploads the updated content to the mobile communication device, as required by Appellant's claims. Accordingly, the claimed subject matter not explicit in *Willis* also does not "necessarily flow[] from the teachings of" that reference. M.P.E.P. § 2112 (IV) (quoting *Ex parte Levy*, 17 U.S.P.Q.3d 1461, 1464 (Bd. Pat. App. & Inter. 1990)).

II. Rejection of Claim 33 under 35 U.S.C. § 102(b)

Claim 33 recites "[t]he method of claim 15, wherein the video-game content is displayed in the video game for a predetermined period of time." As discussed in

Appellant's Appeal Brief, *Willis* fails to disclose this subject matter. *See* Appeal Brief at 11-12.

The Examiner's Answer asserts:

> Willis discloses 'game instance 311 then schedules impressions of each advertising spot within the video game' (Willis paragraph 0032). Since a video game is played within a period of time and Willis' impressions of each advertising spot are scheduled within the video game, contrary to appellant's argument, it necessarily results in display of the advertisements for a 'predetermined period of time.['] Additionally if there were no 'predetermined' time limit to the display of advertisements, a search company such as google would not be able to charge its customers monthly fee or annual fee for placing advertisements in its search results.

Examiner's Answer at 3-4. But nothing in *Willis* discloses that the amount of time an advertising impression is played is "predetermined," merely that the impression of each advertising spot is "schedule[d]," without elaborating or explaining what that may mean. Moreover, the Office's contention that the lack of a predetermined time limit to the display of advertisements would prevent a search company from charging a fee for placing advertisements in its search results is unsupported. Claim 33 recites that "the video-game content is displayed in the **video game** for a predetermined period of time." (Emphasis added.) A search company's alleged practices for displaying advertisements in **search results** are irrelevant to the subject matter of Appellant's claims. As such, regardless of what *Willis* may disclose about the scheduling of advertisement impressions, one of ordinary skill in the art would not understand the reference to necessarily disclose the additional subject matter of claim 33. *See* M.P.E.P. § 2112 (IV).

III. Rejection of Claim 18 Under 35 U.S.C. § 103(a)

Claim 18 recites ""[t]he method of claim 15, further comprising the step of sending information to the mobile communication device as part of the updated content, the information providing an in-game placement location associated with the updated video-game content." As in the Final Office Action, the Office again contends in the Examiner's Answer that the asserted combination of *Willis* and *Gatto* renders obvious this subject matter because "Willis discloses 'advertising spot within the video game' and *Gatto* discloses an email ticket that includes advertising images, which the Office contends "inherently requires placement location information . . . of pixels in order for a screen to display the image properly." Examiner's Answer at 4; *see also* Final Office Action at 7. As discussed in Appellant's Appeal Brief, regardless of whether an image includes information on the location of pixels within the image, the asserted combination of references fails to disclose or suggest that any information is sent with the image that provides a "placement location" for the image itself. *See* Appeal Brief at 12-14.

In the Appeal Brief, Appellant also explained that the mobile device could determine how to display information on its screen (e.g., the location at which to display an image) based on information previously stored on the mobile communication device or sent separately from the "updated content." Appeal Brief at 13-14. In response, the Examiner's Answer asserts that *Willis* discloses that displayed advertising content is determined based on the current geographical location of the mobile video game platform; thus, "the display information is not based on information previously stored on the mobile communication device or sent separately from the 'updated content.'" Examiner's Answer at 5. This is incorrect. *Willis* discloses only that the content of the

advertisement is determined based on the geographical location of a mobile device—not that the "in-game placement location" of the advertisement is determined based on the geographical location. *See Willis* at ¶¶ [0029]-[0032]. Accordingly, neither *Willis* nor *Gatto* teaches or suggests the claimed subject matter, such that one of ordinary skill in the art would not have found claim 18 obvious in light of those references.

IV. Rejection of Claim 19 Under 35 U.S.C. § 103(a)

Claim 19 recites "[t]he method of claim 15, further comprising the step of tracking what has been uploaded to the mobile communication device." In an exemplary embodiment, this may allow a content provider to determine "whether the communications device should receive the updated content before uploading the updated content to the communications device." *See, e.g.*, Appellant's Specification at ¶ [017]. As discussed in Appellant's Brief, the asserted combination of *Willis* and *Gatto* fails to disclose or render obvious this subject matter. *See* Appeal Brief at 14-15.

In the Examiner's Answer, the Office contends that "[s]ince the gaming instance 311 [of Willis] communicates all reported impressions to AB 140 for subsequent reporting, the content of Willis arrangement is tracked." Examiner's Answer at 5. Contrary to the Office's assertions, *Willis* does not disclose "tracking what has been uploaded to the mobile communication device." Rather, *Willis* discloses reporting whether an advertisement sent to a mobile device has been displayed in a gaming instance, thus resulting in an impression (*see Willis* at ¶ [0033]), which is different from tracking which advertisements have been sent to the mobile device.

The Examiner's Answer also asserts that *Gatto*'s disclosure of "'progressively' revealing audio/visual messages" renders obvious this subject matter. This is incorrect

for at least the reasons presented in Appellant's Appeal Brief. *See* Appeal Brief at 14-15. Neither reference, therefore, teaches or suggests the subject matter of claim 19.

CONCLUSION

For the reasons given above, and those presented earlier in Appellant's Appeal Brief, the pending claims are allowable and the final rejections should be reversed by the Board.

If there are any fees due under 37 C.F.R. §§ 1.16 or 1.17 which are not enclosed herewith, including any fees required for an extension of time under 37 C.F.R. § 1.136, please charge such fees to Deposit Account 06-0916.

Respectfully submitted,

FINNEGAN, HENDERSON, FARABOW,
GARRETT & DUNNER, L.L.P.

/Jeff T. Watson/

Dated: December 1, 2015 By:_____

Jeff T. Watson
Reg. No. 70,587

Electronic Patent Application Fee Transmittal

Application Number:	11768892
Filing Date:	26-Jun-2007
Title of Invention:	Methods and Systems for Updating In-Game Content
First Named Inventor/Applicant Name:	Joshua Hartwell
Filer:	Jeff Taylor Watson
Attorney Docket Number:	09685.0045-00000

Filed as Large Entity

Filing Fees for Utility under 35 USC 111(a)

Description	Fee Code	Quantity	Amount	Sub-Total in USD($)
Basic Filing:				
Pages:				
Claims:				
Miscellaneous-Filing:				
Petition:				
Patent-Appeals-and-Interference:				
Appeal Forwarding Fee	1413	1	2000	2000
Post-Allowance-and-Post-Issuance:				

Description	Fee Code	Quantity	Amount	Sub-Total in USD($)
Extension-of-Time:				
Miscellaneous:				
			Total in USD ($)	**2000**

Electronic Acknowledgement Receipt

EFS ID:	24230487
Application Number:	11768892
International Application Number:	
Confirmation Number:	3817
Title of Invention:	Methods and Systems for Updating In-Game Content
First Named Inventor/Applicant Name:	Joshua Hartwell
Customer Number:	22852
Filer:	Jeff Taylor Watson
Filer Authorized By:	
Attorney Docket Number:	09685.0045-00000
Receipt Date:	01-DEC-2015
Filing Date:	26-JUN-2007
Time Stamp:	16:18:23
Application Type:	Utility under 35 USC 111(a)

Payment information:

Submitted with Payment	yes
Payment Type	Credit Card
Payment was successfully received in RAM	$2000
RAM confirmation Number	4144
Deposit Account	
Authorized User	

The Director of the USPTO is hereby authorized to charge indicated fees and credit any overpayment as follows:

File Listing:

Document Number	Document Description	File Name	File Size(Bytes)/ Message Digest	Multi Part /.zip	Pages (if appl.)
1	Reply Brief Filed	45reply.pdf	100116 fc3e395413876 5b2d04dea6d045f95838d7d39fb	no	7
Warnings:					
Information:					
2	Fee Worksheet (SB06)	fee-info.pdf	30174 3128f9904045c9236d2415b099c9689f29e1d649	no	2
Warnings:					
Information:					
		Total Files Size (in bytes):	130290		

This Acknowledgement Receipt evidences receipt on the noted date by the USPTO of the indicated documents, characterized by the applicant, and including page counts, where applicable. It serves as evidence of receipt similar to a Post Card, as described in MPEP 503.

New Applications Under 35 U.S.C. 111
If a new application is being filed and the application includes the necessary components for a filing date (see 37 CFR 1.53(b)-(d) and MPEP 506), a Filing Receipt (37 CFR 1.54) will be issued in due course and the date shown on this Acknowledgement Receipt will establish the filing date of the application.

National Stage of an International Application under 35 U.S.C. 371
If a timely submission to enter the national stage of an international application is compliant with the conditions of 35 U.S.C. 371 and other applicable requirements a Form PCT/DO/EO/903 indicating acceptance of the application as a national stage submission under 35 U.S.C. 371 will be issued in addition to the Filing Receipt, in due course.

New International Application Filed with the USPTO as a Receiving Office
If a new international application is being filed and the international application includes the necessary components for an international filing date (see PCT Article 11 and MPEP 1810), a Notification of the International Application Number and of the International Filing Date (Form PCT/RO/105) will be issued in due course, subject to prescriptions concerning national security, and the date shown on this Acknowledgement Receipt will establish the international filing date of the application.

UNITED STATES PATENT AND TRADEMARK OFFICE

UNITED STATES DEPARTMENT OF COMMERCE
United States Patent and Trademark Office
Address: COMMISSIONER FOR PATENTS
P.O. Box 1450
Alexandria, Virginia 22313-1450
www.uspto.gov

APPLICATION NO.	FILING DATE	FIRST NAMED INVENTOR	ATTORNEY DOCKET NO.	CONFIRMATION NO.
11/768,892	06/26/2007	Joshua Hartwell	09685.0045-00000	3817

22852 7590 10/01/2015
FINNEGAN, HENDERSON, FARABOW, GARRETT & DUNNER LLP
901 NEW YORK AVENUE, NW
WASHINGTON, DC 20001-4413

EXAMINER
LIAO, HSINCHUN

ART UNIT	PAPER NUMBER
2649	

NOTIFICATION DATE	DELIVERY MODE
10/01/2015	ELECTRONIC

Please find below and/or attached an Office communication concerning this application or proceeding.

The time period for reply, if any, is set in the attached communication.

Notice of the Office communication was sent electronically on above-indicated "Notification Date" to the following e-mail address(es):

regional-desk@finnegan.com

UNITED STATES PATENT AND TRADEMARK OFFICE

Commissioner for Patents
United States Patent and Trademark Office
P.O. Box 1450
Alexandria, VA 22313-1450
www.uspto.gov

BEFORE THE PATENT TRIAL AND APPEAL BOARD

Application Number: 11/768,892
Filing Date: June 26, 2007
Appellant(s): HARTWELL, JOSHUA

Jeff T. Watson
For Appellant

EXAMINER'S ANSWER

This is in response to the appeal brief filed 20 April 2015.

(1) Grounds of Rejection to be Reviewed on Appeal

Every ground of rejection set forth in the Office action dated 08/18/2014 from which the appeal is taken is being maintained by the examiner except for the grounds of rejection (if any) listed under the subheading "WITHDRAWN REJECTIONS." New grounds of rejection (if any) are provided under the subheading "NEW GROUNDS OF REJECTION."

(2) Response to Argument

A. Rejection of Claims 15-17 and 33-35 under 35 U.S.C. § 102(b)

In pages 7-10 of the appeal brief, appellant argues that nothing in Willis discloses that its system "check[s] what updated video-game content to send based on... a type of mobile communication device" . Appellant also argues that nothing in Willis discloses that "different software content may be sent to different types of mobile devices as a result of different locations obtained by different location determination technologies implemented inside different types of devices" because Willis merely discloses that advertising content is delivered to a gaming platform based on the physical location of the gaming platform. The examiner respectfully disagrees with the appellant's assertions. Willis discloses "***determine*** ad content to provide to the game console and an appropriate ADSP for delivering of the ad content" (Willis Fig. 3 Item 304 paragraph 0034). Willis discloses "Examples of mobile video game platforms include N-Gage, from Nokia, SONY PSP, and Gizmondo. The geolocation of the mobile video game platform is optionally changed at any time including during game play" (Willis paragraph 0035). Therefore, Willis' arrangement provides advertising content to video games running in

different mobile devices and different platforms. As explained in the office action, the content of software update is inherently adapted to/based on a type of mobile communication device/platform (e.g. i-phone or android mobile device). Otherwise, the mobile device would not be able to display the updated content properly. Since Willis discloses ***determining*** advertising content to provide to the game console, providing updated advertising content to different types of mobile communication devices/platforms and the advertising content is inherently based on a type of mobile communication device/platform, contrary to appellant's argument, Willis discloses "check[s] what updated video-game content to send based on... a type of mobile communication device" as recited in the claims.

B. Rejection of Claim 33 under 35 U.S.C. § 102(b)

In pages 11 and 12 of the appeal brief, appellant argues that Willis fails to disclose, expressly or inherently, that "the video-game content is displayed in the video game for a predetermined period of time," as recited in claim 33. Appellant also argues that Willis fails to disclose that scheduling the impressions necessarily results in display of the advertisements for a "predetermined period of time." The examiner respectfully disagrees with the appellant's assertions. Willis discloses “game instance 311 then schedules impressions of each advertising spot within the video game” (Willis paragraph 0032). Since a video game is played within a period of time and Willis’ impressions of each advertising spot are scheduled within the video game, contrary to appellant's argument, it necessarily results in display of the advertisements for a "predetermined period of time. Additionally, if there were no “predetermined” time limit to

the display of advertisements, a search company such as google would not be able to charge its customers monthly fee or annual fee for placing advertisements in its search results.

C. Rejection of Claim 18 under 35 U.S.C. § 103(a)

In pages 12 and 14 of the appeal brief, appellant argues “Gatto fails to disclose that any information is sent with the image that provides a "placement location" for the image itself. This is further reflected in part because Gatto is not concerned with a dynamic "video game," but instead a static email ticket, and in any event does not contemplate one or more placement locations within a video game that may be capable of displaying updated content, thus facilitating the provision of a particular location for particular content”. The examiner respectfully disagrees with the appellant's assertions. As mentioned above, Willis discloses “advertising spot within the video game” (Willis paragraph 0032). Gatto’s email ticket includes advertising images (Gatto Fig. 1-12). Regardless if Gatto’s advertising image is “static” or “dynamic”, an image inherently requires placement location information (e.g. x, y location of a pixel note: a pixel is a dot in a screen that can be turned on or off) of pixels in order for a screen to display the image properly. Since Willis discloses “advertising spot within the video game”, a video game includes images and images require placement location information of pixels, Willis in view of Gatto discloses "information providing an in-game placement location associated with the updated video-game content" as recited in claim 18.

Appellant also argues that the mobile device could determine how to display information on its screen based on information previously stored on the mobile communication device or sent separately from the "updated content." The examiner respectfully disagrees with the appellant's assertions. Willis discloses “receiving advertising content data from the server, the advertising content server being relevant to at least one of the HOME playing location and the ***current geographical location*** of the mobile video game platform” (Willis paragraph 0014). Since the advertising content is relevant to ***current geographical location*** of the mobile video game platform, the display information is not based on information previously stored on the mobile communication device or sent separately from the "updated content."

D. Rejection of Claim 19 under 35 U.S.C. § 103(a)

In pages 14 and 15 of the appeal brief, appellant argues Gatto does not teach or suggest "tracking" any content that has been uploaded to a mobile device, such as to keep a record of the content that has been uploaded as may be needed or desired, for example, to verify the upload or to generate a list of uploaded content. The examiner respectfully disagrees with the appellant's assertions. Willis discloses “When the game instance 311 terminates, or a new gaming session is initialized, the gaming instance 311 communicates all unreported impressions to AB 140 for subsequent reporting and billing to ADSP 105 and ADSP 106” (Willis paragraph 0032). Since the gaming instance 311 communicates all unreported impressions to AB 140 for subsequent reporting, the content of Willis arrangement is tracked. As mentioned in the office action, Gatto discloses “progressively" revealing audio/visual messages (Gatto paragraph 0016,

0019). If the content of Gatto's audio/visual message were not tracked, the email ticket would not be able to "progressively" revealing audio/visual messages. Therefore, both Willis and Gatto disclose the limitation of tracking content that has been uploaded to a mobile device.

E. Rejection of Claim 32 under 35 U.S.C. § 103(a)

In page15 of the appeal brief, appellant argues that Gatto fails to disclose "checking what updated video-game content to send based on one of the factors including a type of the mobile communication device, a telecom service associated with the mobile communication device, and a service provider of the telecom service," as recited in independent claim 15. Please see the above reference for argument for claim 15 in A.

For the above reasons, it is believed that the rejections should be sustained.

Respectfully submitted,

/HSIN-CHUN LIAO/

Primary Examiner, Art Unit 2649

Conferees:

/Edward Urban/

Supervisory Patent Examiner, Art Unit 2649

/WESLEY KIM/

Supervisory Patent Examiner, Art Unit 2648

Requirement to pay appeal forwarding fee. In order to avoid dismissal of the instant appeal in any application or ex parte reexamination proceeding, 37 CFR 41.45 requires payment of an appeal forwarding fee within the time permitted by 37 CFR 41.45(a), unless appellant had timely paid the fee for filing a brief required by 37 CFR 41.20(b) in effect on March 18, 2013.

PATENT
Attorney Docket No. 09685.0045-00000

IN THE UNITED STATES PATENT AND TRADEMARK OFFICE

In re Application of:	)	
	)	
Joshua HARTWELL	)	Group Art Unit: 2649
	)	
Application No.: 11/768,892	)	Examiner: Hsinchun Liao
	)	
Filed: June 26, 2007	)	
	)	
For: METHODS AND SYSTEMS FOR UPDATING IN-GAME CONTENT	)	Confirmation No.: 3817

Attention: Mail Stop Appeal Brief-Patents
Commissioner for Patents
P.O. Box 1450
Alexandria, VA 22313-1450

Dear Commissioner:

APPEAL BRIEF UNDER BOARD RULE § 41.37

In support of the Notice of Appeal filed January 20, 2015, and further to Board Rule 41.37 and the request for a one-month extension of time and fee payment filed concurrently herewith, Appellant presents this brief.

This Appeal Brief responds to the Final Office Action mailed August 18, 2014, which finally rejected claims 15-19 and 32-35. The pending claims are set forth in the attached Claims Appendix.

If any additional fees are required or if the enclosed payment is insufficient, Appellant requests that the required fees be charged to Deposit Account No. 06-0916.

Table of Contents

I. Real Party in Interest 3

II. Related Appeals and Interferences 4

III. Summary of Claimed Subject Matter 5

IV. Argument 7

V. Claims Appendix 17

VI. Evidence Appendix 19

VII. Related Proceedings Appendix 20

I. Real Party In Interest

GOSUB 60, Inc. is the real party in interest.

II. Related Appeals and Interferences

There are currently no other prior or pending appeals, interferences, or judicial proceedings of which Appellant, Appellant's legal representative, or Assignee are aware that may be related to, directly affect, be directly affected by, or have a bearing on the Board's decision in the pending appeal.

III. Summary of Claimed Subject Matter

Of the appealed claims, claim 15 is the sole independent claim. A concise explanation of the subject matter of claim 15, referring to the specification by paragraph number, and to the drawings by reference characters, is set forth below. Claims 16-19 and 32-35 are the dependent claims involved in this appeal.

Independent claim 15 recites a method for "providing updated video-game content to a mobile communication device for use in a mobile video game." *See*, *e.g.*, Specification ¶¶ [0001], [0015], Fig. 4A, Fig. 4B. The method includes "receiving a request for the updated video-game content from the mobile communication device, the updated video-game content being usable in the video game that already exists on the mobile communication device." *See*, *e.g.*, Specification ¶¶ [0015], [0031], [0089], [0092], Fig. 4A (430), Fig. 4B (420, 430).

The method of claim 15 also includes "checking what updated video-game content to send based on one of the factors including a type of the mobile communication device, a telecom service associated with the mobile communication device, and a service provider of the telecom service." *See*, *e.g.*, Specification ¶¶ [0078], [0089], [0090], [0096], Fig. 4A (430, 450), Fig. 4B (440). Further, claim 15 recites "uploading updated video-game content to the communications device." *See*, *e.g.*, Specification ¶¶ [0090], [0099], Fig. 4A (450), Fig. 4B (450). According to claim 15, "the video-game content [is] usable when the video game operates on the communications device." *See*, *e.g.*, Specification ¶¶ [0015], [0031], [0053], [0086], Fig. 3A (340), Fig. 3B (340).

The foregoing summary of the presently claimed subject matter indicates portions of the specification (including the drawings) that provide examples of embodiments of elements of the claimed subject matter. It is to be understood that other portions of the specification not cited herein may also provide examples of embodiments of elements of the claimed subject matter. It is also to be understood that the indicated examples are merely examples, and the scope of the claimed subject matter includes alternative embodiments and equivalents thereof. References herein to the specification are thus intended to be exemplary and not limiting.

IV. Argument

In the Final Office Action, claims 15-17 and 33-35 are rejected under 35 U.S.C. § 102(b) as allegedly anticipated by U.S. Patent Publication No. 2006/0136297 ("*Willis*"). Further, claims 18, 19, and 32 are rejected under 35 U.S.C. § 103(a) as allegedly obvious over *Willis* in view of U.S. Patent Publication No. 2004/0127279 ("*Gatto*").

Appellant submits that the pending claims are allowable over the cited references and requests that the Board reverse the final rejections.

A. Rejection of Claims 15-17 and 33-35 under 35 U.S.C. § 102(b)

Appellant respectfully traverses the rejection of claims 15-17 and 33-35 under 35 U.S.C. § 102(b). To establish that a single reference anticipates Appellant's claims under 35 U.S.C. § 102, the Examiner must show that it discloses the "identical invention . . . in as complete detail as is contained in the . . . claim." *See* M.P.E.P. § 2131 (quoting *Richardson v. Suzuki Motor Co.*, 868 F.2d 1126, 1236, 9 U.S.P.Q.2d 1913, 1920 (Fed. Cir. 1989)). Additionally, the "elements must be arranged as required by the claim." *See* M.P.E.P. § 2131 (citing *In re Bond*, 910 F.2d 831, 15 U.S.P.Q.2d 1566 (Fed. Cir. 1990)). Here, *Willis* does not disclose or teach all of the elements of Appellant's independent claim 15, and thus cannot anticipate.

For example, independent claim 15 recites a method for providing updated video-game content to a mobile communication device for use in a mobile video game, comprising, among other things, "checking what updated video-game content to send based on one of the factors including a type of the mobile communication device, a telecom service associated with the mobile communication device, and a service

provider of the telecom service." Contrary to the assertions in the Final Office Action, *Willis* does not disclose at least the above subject matter of claim 15.

Willis relates to a system and method of "delivering dynamic content that is dependent on the geographic location (geolocation) of the recipient." *Willis* at ¶ [0002]. More specifically, *Willis* is directed to techniques for delivering advertising content to a gaming platform based on the location of the gaming platform. *Id*. at Abstract. According to *Willis*, a game instance communicates with a geolocation server to determine a physical playing location of a gamer and then provides this location information to an advertising broker. *Id*. at ¶¶ [0029]-[0031]. *Willis* discloses that the advertising broker determines both the appropriate content and the identities of advertisement service providers for serving the content to the platform. *Id*. at ¶ [0031]. The game instance then retrieves that content from an appropriate advertisement service provider. *Id*. at ¶ [0032].

In the Final Office Action, the Examiner asserts that *Willis* discloses "checking what updated video-game content to send based on one of the factors including a type of the mobile communication device, a telecom service associated with the mobile communication device, and a service provider of the telecom service" because *Willis* discloses that video games may be played on a variety of types of devices, such as a PDA or mobile phone, and a mobile phone "inherently requires a telecom service" and is associated with a service provider. Final Office Action at 5. Nothing in *Willis*, however, discloses that "updated video-game content" is sent or uploaded "**based on** one of the factors" listed in the pending claims. Rather, *Willis* discloses that advertising content is sent merely based on the physical geographic location of the gamer. *Willis* at

¶¶ [0029]-[0032]. Regardless of whether the video game devices disclosed in *Willis* may be associated with a "type" of device, "telecom service," and/or "service provider," nothing in Willis discloses that one of those characteristics, as claimed here, determines the updated video-game content sent to the claimed device or advertising information sent to the device according to *Willis*'s method.

In response to Appellant's previous arguments regarding *Willis*'s deficiencies with respect to this subject matter, the Final Office Action states:

> Different mobile platforms have different capabilities. For example, it does not make sense to send a video-game content to a mobile device that can only display text. Therefore, Willis' video-game content is sent or uploaded "based on a type of the mobile communication device" as recited in claim 15. Furthermore, Willis also discloses different mobile devices have different location determination technologies (Willis paragraph 0029). Since Willis' "updated video-game content" is location dependent, different software content may be sent to different types of mobile devices as a result of different locations obtained by different location determination technologies implemented inside different types of devices.

Final Office Action, pp. 2-3. Regardless of whether it "make[s] sense" to the Examiner "to send a video-game content to a mobile device that can only display text" (*see id.*, p. 2), nothing in *Willis* discloses that its system "check[s] what updated video-game content to send based on . . . a type of mobile communication device." Similarly, nothing in *Willis* discloses that "different software content may be sent to different types of mobile devices as a result of different locations obtained by different location determination technologies implemented inside different types of devices." *See id.* *Willis* merely discloses that advertising content is delivered to a gaming platform based on the physical location of the gaming platform. *See, e.g.*, *Willis* at Abstract. To the

extent the Final Office Action asserts that *Willis* discloses the subject matter of Appellant's claims based on information that is not disclosed within the four corners of *Willis* (e.g., what "make[s] sense" to the Examiner), such assertions are improper bases for a rejection under 35 U.S.C. § 102. M.P.E.P. § 2131.

The Examiner has not indicated any formal reliance on the doctrine of inherent anticipation in support of this rejection. To this end, Applicant notes, however, that whether "different software content **may be sent** to different types of mobile devices," as the Examiner alleges is disclosed by *Willis*, *see* Final Office Action at 2-3 (emphasis added), appears inconsistent with and does not meet the high standard required to prove and substantiate an inherent anticipation rejection, s*ee* M.P.E.P. § 2112 (IV) ("The fact that a certain result or characteristic **may occur** or be present in the prior art is not sufficient to establish the inherency of that result or characteristic." (emphasis added)). Applicant disagrees that *Willis* discloses, expressly or inherently, providing updated video content based on any of the factors listed in claim 15.

Accordingly, in view of at least the above differences between Appellant's claims and *Willis*, independent claim 15 is allowable over the prior art of record and the rejection of claim 15 should be reversed by the Board.

Claims 16, 17, and 33-35 depend directly or indirectly from allowable independent claim 15. Therefore, these claims are allowable for at least the reasons indicated above. Claims 16, 17, and 33-35 are also allowable in view of the additional distinguishing features recited by these claims. Therefore, the rejections of claims 16, 17, and 33-35 under 35 U.S.C. § 102(b) should also be reversed by the Board.

B. Rejection of Claim 33 under 35 U.S.C. § 102(b)

In the Final Office Action, dependent claim 33 was rejected under 35 U.S.C. § 102(b) as being anticipated by *Willis*. Final Office Action at 6. Claim 33 recites "[t]he method of claim 15, wherein the video-game content is displayed in the video game for a predetermined period of time." Because claim 33 depends from independent claim 15, it is patentable over *Willis* for at least the reasons outlined above. Further, nothing in *Willis* discloses or teaches the additional subject matter recited by claim 33.

For example, *Willis* fails to disclose, expressly or inherently, that "the video-game content is displayed in the video game for a predetermined period of time," as recited in claim 33. In the Final Office Action, the Examiner contends that this subject matter is anticipated by *Willis*'s disclosure that the game instance "schedules impressions of each advertising spot within the video game . . . ." Final Office Action at 6 (citing *Willis* at ¶¶ [0032], [0035], [0037]). Yet, *Willis* fails to disclose that scheduling the impressions necessarily results in display of the advertisements for a "predetermined period of time."

The Final Office Action also asserts:

> Willis discloses "The geolocation of the mobile video game platform is optionally changed at any time including during game play" (Willis paragraph 0035, 0037). Since Willis' "updated video-game content" is location dependent, if the location is updated for a predetermined period of time, the corresponding video-game content is also updated for a predetermined period of time. Therefore, Willis teaches the limitation of "the video-game content is displayed in the video game for a predetermined period of time."

Final Office Action, p. 3. But nothing in *Willis* discloses that "the location is updated for a predetermined period of time" or that "the corresponding video-game content is also updated for a predetermined period of time." *Id*. Rather, the Final Office Action

appears to base the rejection of this subject matter on a hypothetical scenario that is neither disclosed nor contemplated by *Willis*. Moreover, even if *Willis* disclosed that "video-game content is . . . **updated** for a predetermined period of time," which it does not, claim 33 requires that "the video-game content is **displayed** in the video game for a predetermined period of time." (Emphases added.) The duration of an update is different from the period of time that content is displayed.

Therefore, for at least the above reasons, the rejection of claim 33 under 35 U.S.C. § 102(b) should be reversed by the Board.

C. Rejection of Claim 18 under 35 U.S.C. § 103(a)

In the Final Office Action, dependent claim 18 was rejected under 35 U.S.C. § 103(a) as being allegedly unpatentable over *Willis* in view of *Gatto*. Final Office Action at 7. Claim 18 recites "[t]he method of claim 15, further comprising the step of sending information to the mobile communication device as part of the updated content, the information providing an in-game placement location associated with the updated video-game content." Because claim 18 depends from independent claim 15, it is patentable over *Willis* for at least the reasons outlined above. Moreover, *Gatto* fails to overcome the deficiencies of *Willis* with respect to claim 15, and the Final Office Action does not assert otherwise. Further, neither *Willis* nor *Gatto* discloses or teaches the additional subject matter recited by claim 18.

The Final Office Action acknowledges that *Willis* "fails to teach the step of sending information to the mobile communication device as part of the updated content, the information providing an in-game placement location associated with the updated video-game content." Final Office Action at 7. *Gatto* fails to disclose or render obvious

at least sending "information providing an in-game placement location associated with the updated video-game content," as recited in claim 18. The Final Office Action contends that this subject matter is disclosed by *Gatto* at paragraph [0051], which states that "the player is invited to virtually 'twist' the bottle cap off to download some file, image or software program, such as a screensaver, for example." Final Office Action at 7; *Gatto* at ¶ [0051]. In particular, the Office states that "an image requires pixel e.g. x, y locations," thus implying that *Gatto*'s disclosure of downloading an image necessarily discloses "providing an in-game placement location." *See* Final Office Action at 7. Nothing in *Gatto* supports this assertion. Regardless of whether the downloaded image includes information on the locations of pixels within the image, which *Gatto* does not disclose, *Gatto* fails to disclose that any information is sent with the image that provides a "placement location" for the image itself. This is further reflected in part because *Gatto* is not concerned with a dynamic "video game," but instead a static email ticket, and in any event does not contemplate one or more placement locations within a video game that may be capable of displaying updated content, thus facilitating the provision of a particular location for particular content.

The Final Office Action also asserts: "Without the 'location information' (where to display e.g. bottle cap in a screen), a mobile device will not be able to display the 'non-rectangular promotional layer 108' correctly on a screen." Final Office Action, p. 3. Appellant disagrees. For example, the mobile device could determine how to display information on its screen based on information previously stored on the mobile communication device or sent separately from the "updated content." Thus, contrary to the Examiner's assertion, an "in-game placement location associated with the updated

video-game content" would not necessarily be sent "to the mobile communication device as part of the updated content." Nothing in *Gatto* suggests otherwise.

For at least the above reasons, the rejection of claim 18 under 35 U.S.C. § 103(a) should be reversed by the Board.

D. Rejection of Claim 19 under 35 U.S.C. § 103(a)

In the Final Office Action, dependent claim 19 was rejected under 35 U.S.C. § 103(a) as being allegedly unpatentable over *Willis* in view of *Gatto*. Final Office Action at 7. Claim 19 recites "[t]he method of claim 15, further comprising the step of tracking what has been uploaded to the mobile communication device." Because claim 19 depends from independent claim 15, it is patentable over *Willis* for at least the reasons outlined above. Moreover, *Gatto* fails to overcome the deficiencies of *Willis* with respect to claim 15, and the Final Office Action does not assert otherwise. Further, neither *Willis* nor *Gatto* discloses or teaches the additional subject matter recited by claim 19.

The Final Office Action acknowledges that *Willis* "fails to teach the step of tracking what has been uploaded to the mobile communication device." Final Office Action at 7. Although *Willis* discloses tracking geolocation information, it fails to disclose tracking "what has been uploaded to the mobile communication device," as recited in claim 19. *See Willis* ¶ [0038]. *Gatto* fails to disclose or render obvious "tracking what has been uploaded to the mobile communication device," as recited in claim 19. The Final Office Action alleges that *Gatto*'s disclosure of "progressively replac[ing]" a scrambled audio message or "progressively reveal[ing]" a portion of a secret layer discloses this subject matter (*see* Final Office Action, p. 7), but *Gatto* does

not disclose "tracking" what information has been progressively replaced or revealed (*see Gatto* at ¶¶ [0016], [0019]). In any event, *Gatto* does not teach or suggest "tracking" any content that has been uploaded to a mobile device, such as to keep a record of the content that has been uploaded as may be needed or desired, for example, to verify the upload or to generate a list of uploaded content.

For at least the above reasons, the rejection of claim 19 under 35 U.S.C. § 103(a) should be reversed by the Board.

E. Rejection of Claim 32 under 35 U.S.C. § 103(a)

Claim 32 is rejected under 35 U.S.C. § 103(a) as being unpatentable over *Willis* in view of *Gatto*. Applicant traverses the rejection. A *prima facie* case of obviousness has not been established.

Claim 32 depends from independent claim 15. Thus, claim 32 is patentably distinguishable from *Willis* for at least the reasons outlined above for claim 15. Further, *Gatto* fails to overcome the deficiencies of *Willis* with respect to claim 15, and the Office Action does not assert otherwise. For example, *Gatto* fails to disclose "checking what updated video-game content to send based on one of the factors including a type of the mobile communication device, a telecom service associated with the mobile communication device, and a service provider of the telecom service," as recited in independent claim 15.

For at least the above reasons, the rejection of claim 32 under 35 U.S.C. § 103(a) should be reversed by the Board.

F. Conclusion

For at least the foregoing reasons, pending claims 15-19 and 32-35 are allowable over the cited art of record and reversal of the final rejections is respectfully requested.

As Appellant's remarks with respect to the final rejections are sufficient to overcome these rejections, Appellant's silence as to assertions in the Final Office Action or certain requirements that may be applicable to such rejections (e.g., whether a reference constitutes prior art, or assertions as to patentability of dependent claims) is not a concession by Appellant that such assertions are accurate or such requirements have been met, and Appellant reserves the right to analyze and dispute such in the future.

To the extent any extension of time under 37 C.F.R. § 1.136 is required to obtain entry of this Appeal Brief, such extension is hereby respectfully requested. If there are any fees due under 37 C.F.R. §§ 1.16 or 1.17 which are not enclosed herewith, including any fees required for an extension of time under 37 C.F.R. § 1.136, please charge such fees to our Deposit Account No. 06-0916.

Respectfully submitted,

FINNEGAN, HENDERSON, FARABOW,
GARRETT & DUNNER, L.L.P.

Dated: April 20, 2015

By: /Jeff T. Watson/
Jeff T. Watson
Reg. No. 70,587

V. Claims Appendix

1-14. (Canceled)

15. (Previously Presented) A method for providing updated video-game content to a mobile communication device for use in a mobile video game, the method comprising the steps of:

receiving a request for the updated video-game content from the mobile communication device, the updated video-game content being usable in the video game that already exists on the mobile communication device;

checking what updated video-game content to send based on one of the factors including a type of the mobile communication device, a telecom service associated with the mobile communication device, and a service provider of the telecom service; and

uploading updated video-game content to the communications device, the video-game content being usable when the video game operates on the communications device.

16. (Previously Presented) The method of claim 15, wherein the updated video-game content is promotional content.

17. (Previously Presented) The method of claim 15, further comprising the step of checking whether the communications device should receive the updated video-game content before uploading the updated video-game content to the communications device.

18. (Previously Presented) The method of claim 15, further comprising the step of sending information to the mobile communication device as part of the updated content, the information providing an in-game placement location associated with the updated video-game content.

19. (Original) The method of claim 15, further comprising the step of tracking what has been uploaded to the mobile communication device.

20-31. (Canceled)

32. (Previously Presented) The method of claim 15, wherein uploading updated video-game content to the mobile communication device further comprises displaying the video-game content within the game at a location based on user interaction.

33. (Previously Presented) The method of claim 15, wherein the video-game content is displayed in the video game for a predetermined period of time.

34. (Previously Presented) The method of claim 15, wherein the video-game content is selected based on the location of the mobile communication device.

35. (Previously Presented) The method of claim 15, wherein the video-game content is selected based on user information specific to a user of the mobile communication device.

VI. Evidence Appendix

No additional evidence is cited herein.

VII. Related Proceedings Appendix

No related proceeding decisions are cited herein.

Electronic Patent Application Fee Transmittal

Application Number:	11768892
Filing Date:	26-Jun-2007
Title of Invention:	Methods and Systems for Updating In-Game Content
First Named Inventor/Applicant Name:	Joshua Hartwell
Filer:	Jeff Taylor Watson/Gwendolyn Ramsey
Attorney Docket Number:	09685.0045-00000

Filed as Large Entity

Filing Fees for Utility under 35 USC 111(a)

Description	Fee Code	Quantity	Amount	Sub-Total in USD($)
Basic Filing:				
Pages:				
Claims:				
Miscellaneous-Filing:				
Petition:				
Patent-Appeals-and-Interference:				
Post-Allowance-and-Post-Issuance:				
Extension-of-Time:				

Description	Fee Code	Quantity	Amount	Sub-Total in USD($)
Extension - 1 month with $0 paid	1251	1	200	200
Miscellaneous:				
			Total in USD ($)	**200**

Electronic Acknowledgement Receipt

EFS ID:	22104093
Application Number:	11768892
International Application Number:	
Confirmation Number:	3817
Title of Invention:	Methods and Systems for Updating In-Game Content
First Named Inventor/Applicant Name:	Joshua Hartwell
Customer Number:	22852
Filer:	Jeff Taylor Watson/Gwendolyn Ramsey
Filer Authorized By:	Jeff Taylor Watson
Attorney Docket Number:	09685.0045-00000
Receipt Date:	20-APR-2015
Filing Date:	26-JUN-2007
Time Stamp:	10:54:58
Application Type:	Utility under 35 USC 111(a)

Payment information:

Submitted with Payment	yes
Payment Type	Credit Card
Payment was successfully received in RAM	$200
RAM confirmation Number	8603
Deposit Account	
Authorized User	

The Director of the USPTO is hereby authorized to charge indicated fees and credit any overpayment as follows:

File Listing:

Document Number	Document Description	File Name	File Size(Bytes)/ Message Digest	Multi Part /.zip	Pages (if appl.)
1	Extension of Time	09685_0045_EOT1.pdf	50650 7407301c672e90b4fad10983269a44d2da2886d7	no	1
Warnings:					
Information:					
2	Appeal Brief Filed	09685_0045_AppealBrief.pdf	132030 3b7d59e5cca20a9b47512251fa0f83f4d1051139	no	20
Warnings:					
Information:					
3	Fee Worksheet (SB06)	fee-info.pdf	30415 df6b842b6ea2d0456739ab65c3686b2a9c9152b1	no	2
Warnings:					
Information:					
		Total Files Size (in bytes):	213095		

This Acknowledgement Receipt evidences receipt on the noted date by the USPTO of the indicated documents, characterized by the applicant, and including page counts, where applicable. It serves as evidence of receipt similar to a Post Card, as described in MPEP 503.

<u>New Applications Under 35 U.S.C. 111</u>
If a new application is being filed and the application includes the necessary components for a filing date (see 37 CFR 1.53(b)-(d) and MPEP 506), a Filing Receipt (37 CFR 1.54) will be issued in due course and the date shown on this Acknowledgement Receipt will establish the filing date of the application.

<u>National Stage of an International Application under 35 U.S.C. 371</u>
If a timely submission to enter the national stage of an international application is compliant with the conditions of 35 U.S.C. 371 and other applicable requirements a Form PCT/DO/EO/903 indicating acceptance of the application as a national stage submission under 35 U.S.C. 371 will be issued in addition to the Filing Receipt, in due course.

<u>New International Application Filed with the USPTO as a Receiving Office</u>
If a new international application is being filed and the international application includes the necessary components for an international filing date (see PCT Article 11 and MPEP 1810), a Notification of the International Application Number and of the International Filing Date (Form PCT/RO/105) will be issued in due course, subject to prescriptions concerning national security, and the date shown on this Acknowledgement Receipt will establish the international filing date of the application.

PATENT
Attorney Docket No. 09685.0045-00000

IN THE UNITED STATES PATENT AND TRADEMARK OFFICE

In re Application of:	)	
	)	
Joshua HARTWELL	)	Group Art Unit: 2649
	)	
Application No.: 11/768,892	)	Examiner: Hsinchun Liao
	)	
Filed: June 26, 2007	)	
	)	
For: METHODS AND SYSTEMS FOR UPDATING IN-GAME CONTENT	)	Confirmation No.: 3817

Commissioner for Patents
P.O. Box 1450
Alexandria, VA 22313-1450

Dear Commissioner:

PETITION FOR EXTENSION OF TIME

Applicant petitions for a one-month extension of time to file an Appeal Brief in support of the Notice of Appeal filed on January 20, 2015. A fee of $200.00 is enclosed.

Please grant any additional extensions of time required to enter the attached reply and charge any additional required fees to deposit account 06-0916.

Respectfully submitted,

FINNEGAN, HENDERSON, FARABOW,
GARRETT & DUNNER, L.L.P.

/Jeff T. Watson/

Dated: April 20, 2015 By:_____

Jeff T. Watson
Reg. No. 70,587

PATENT
Customer No. 22,852
Attorney Docket No. 09685.0045-00000

BEFORE THE PATENT TRIAL AND APPEAL BOARD

In re Application of:	)
	)
Joshua HARTWELL	) Group Art Unit: 2649
	)
Application No.: 11/768,892	) Examiner: Hsinchun Liao
	)
Filed: June 26, 2007	) Confirmation No.: 3817
	)
For: METHODS AND SYSTEMS FOR UPDATING IN-GAME CONTENT	) **Mail Stop AF**)

Commissioner for Patents
P.O. Box 1450
Alexandria, VA 22313-1450

NOTICE OF APPEAL UNDER 37 C.F.R. § 41.31

Dear Commissioner:

Applicant appeals to the Patent Trial and Appeal Board from the Examiner's decision mailed August 18, 2014.

The items below are appropriate:

1. Applicant petitions for a two-month extension of time, based on the mailing date of the outstanding Office action. The petition fee of $600.00 is enclosed.

2. The Notice of Appeal Fee was previously paid in this application on September 5, 2013, but a final Board decision was not made on the prior appeal. Accordingly, no Appeal Fee is due at this time.

Please grant any extensions of time required to enter this response and charge any additional required fees to deposit account 06-0916.

Respectfully submitted,

FINNEGAN, HENDERSON, FARABOW,
GARRETT & DUNNER, L.L.P.

/Jeff T. Watson/

Dated: January 20, 2015 By:_____

Jeff T. Watson
Reg. No. 70,587

Electronic Patent Application Fee Transmittal

Application Number:	11768892
Filing Date:	26-Jun-2007
Title of Invention:	Methods and Systems for Updating In-Game Content
First Named Inventor/Applicant Name:	Joshua Hartwell
Filer:	Jeff Taylor Watson/Gwendolyn Ramsey
Attorney Docket Number:	09685.0045-00000

Filed as Large Entity

Filing Fees for Utility under 35 USC 111(a)

Description	Fee Code	Quantity	Amount	Sub-Total in USD($)
Basic Filing:				
Pages:				
Claims:				
Miscellaneous-Filing:				
Petition:				
Patent-Appeals-and-Interference:				
Notice of Appeal	1401	1	800	800
Post-Allowance-and-Post-Issuance:				

Description	Fee Code	Quantity	Amount	Sub-Total in USD($)
Extension-of-Time:				
Extension - 2 months with $0 paid	1252	1	600	600
Miscellaneous:				
		Total in USD ($)		**1400**

Electronic Acknowledgement Receipt

EFS ID:	21250636
Application Number:	11768892
International Application Number:	
Confirmation Number:	3817
Title of Invention:	Methods and Systems for Updating In-Game Content
First Named Inventor/Applicant Name:	Joshua Hartwell
Customer Number:	22852
Filer:	Jeff Taylor Watson/Gwendolyn Ramsey
Filer Authorized By:	Jeff Taylor Watson
Attorney Docket Number:	09685.0045-00000
Receipt Date:	20-JAN-2015
Filing Date:	26-JUN-2007
Time Stamp:	14:14:37
Application Type:	Utility under 35 USC 111(a)

Payment information:

Submitted with Payment	yes
Payment Type	Credit Card
Payment was successfully received in RAM	$1400
RAM confirmation Number	446
Deposit Account	
Authorized User	
The Director of the USPTO is hereby authorized to charge indicated fees and credit any overpayment as follows:	

File Listing:

Document Number	Document Description	File Name	File Size(Bytes)/ Message Digest	Multi Part /.zip	Pages (if appl.)
1		09685_0045_EOT_NOA.pdf	60463 ab96ae3ab19544d132ef17ef4e7c41664201750b	yes	2

Multipart Description/PDF files in .zip description

Document Description	Start	End
Extension of Time	1	1
Notice of Appeal Filed	2	2

Warnings:

Information:

2	Fee Worksheet (SB06)	fee-info.pdf	32168 2b3b344c89e3e6572361995a0b3bac0d7c1fb7e5	no	2

Warnings:

Information:

Total Files Size (in bytes):	92631

This Acknowledgement Receipt evidences receipt on the noted date by the USPTO of the indicated documents, characterized by the applicant, and including page counts, where applicable. It serves as evidence of receipt similar to a Post Card, as described in MPEP 503.

<u>New Applications Under 35 U.S.C. 111</u>
If a new application is being filed and the application includes the necessary components for a filing date (see 37 CFR 1.53(b)-(d) and MPEP 506), a Filing Receipt (37 CFR 1.54) will be issued in due course and the date shown on this Acknowledgement Receipt will establish the filing date of the application.

<u>National Stage of an International Application under 35 U.S.C. 371</u>
If a timely submission to enter the national stage of an international application is compliant with the conditions of 35 U.S.C. 371 and other applicable requirements a Form PCT/DO/EO/903 indicating acceptance of the application as a national stage submission under 35 U.S.C. 371 will be issued in addition to the Filing Receipt, in due course.

<u>New International Application Filed with the USPTO as a Receiving Office</u>
If a new international application is being filed and the international application includes the necessary components for an international filing date (see PCT Article 11 and MPEP 1810), a Notification of the International Application Number and of the International Filing Date (Form PCT/RO/105) will be issued in due course, subject to prescriptions concerning national security, and the date shown on this Acknowledgement Receipt will establish the international filing date of the application.

PATENT
Customer No. 22,852
Attorney Docket No. 09685.0045-00000

IN THE UNITED STATES PATENT AND TRADEMARK OFFICE

In re Application of:	)
	)
Joshua HARTWELL	) Group Art Unit: 2649
	)
Application No.: 11/768,892	) Examiner: Hsinchun Liao
	)
Filed: June 26, 2007	)
	)
For: METHODS AND SYSTEMS FOR UPDATING IN-GAME CONTENT	) Confirmation No.: 3817
	)

Commissioner for Patents
P.O. Box 1450
Alexandria, VA 22313-1450

Dear Commissioner:

PETITION FOR EXTENSION OF TIME

Applicant petitions for a two-month extension of time to file a reply to the Office Action of August 18, 2014. A fee of $600.00 is enclosed.

Please grant any additional extensions of time required to enter the attached reply and charge any additional required fees to deposit account 06-0916.

Respectfully submitted,

FINNEGAN, HENDERSON, FARABOW,
GARRETT & DUNNER, L.L.P.

/Jeff T. Watson/

Dated: January 20, 2015 By:_____
Jeff T. Watson
Reg. No. 70,587

UNITED STATES PATENT AND TRADEMARK OFFICE

UNITED STATES DEPARTMENT OF COMMERCE
United States Patent and Trademark Office
Address: COMMISSIONER FOR PATENTS
P.O. Box 1450
Alexandria, Virginia 22313-1450
www.uspto.gov

APPLICATION NO.	FILING DATE	FIRST NAMED INVENTOR	ATTORNEY DOCKET NO.	CONFIRMATION NO.
11/768,892	06/26/2007	Joshua Hartwell	09685.0045-00000	3817

22852 7590 08/18/2014
FINNEGAN, HENDERSON, FARABOW, GARRETT & DUNNER LLP
901 NEW YORK AVENUE, NW
WASHINGTON, DC 20001-4413

EXAMINER
LIAO, HSINCHUN

ART UNIT	PAPER NUMBER
2649	

MAIL DATE	DELIVERY MODE
08/18/2014	PAPER

Please find below and/or attached an Office communication concerning this application or proceeding.

The time period for reply, if any, is set in the attached communication.

Office Action Summary	Application No.	Applicant(s)	
	11/768,892	HARTWELL, JOSHUA	
	Examiner	Art Unit	
	HSIN-CHUN LIAO	2649	

-- The MAILING DATE of this communication appears on the cover sheet with the correspondence address --

Period for Reply

A SHORTENED STATUTORY PERIOD FOR REPLY IS SET TO EXPIRE 3 MONTH(S) OR THIRTY (30) DAYS, WHICHEVER IS LONGER, FROM THE MAILING DATE OF THIS COMMUNICATION.

- Extensions of time may be available under the provisions of 37 CFR 1.136(a). In no event, however, may a reply be timely filed after SIX (6) MONTHS from the mailing date of this communication.
- If NO period for reply is specified above, the maximum statutory period will apply and will expire SIX (6) MONTHS from the mailing date of this communication.
- Failure to reply within the set or extended period for reply will, by statute, cause the application to become ABANDONED (35 U.S.C. § 133). Any reply received by the Office later than three months after the mailing date of this communication, even if timely filed, may reduce any earned patent term adjustment. See 37 CFR 1.704(b).

Status

1)☒ Responsive to communication(s) filed on *25 June 2014*.

2a)☒ This action is **FINAL**. 2b)☐ This action is non-final.

3)☐ Since this application is in condition for allowance except for formal matters, prosecution as to the merits is closed in accordance with the practice under *Ex parte Quayle*, 1935 C.D. 11, 453 O.G. 213.

Disposition of Claims

4)☒ Claim(s) *15-19 and 32-35* is/are pending in the application.

4a) Of the above claim(s) _____ is/are withdrawn from consideration.

5)☐ Claim(s) _____ is/are allowed.

6)☒ Claim(s) *15-19 and 32-35* is/are rejected.

7)☐ Claim(s) _____ is/are objected to.

8)☐ Claim(s) _____ are subject to restriction and/or election requirement.

Application Papers

9)☐ The specification is objected to by the Examiner.

10)☐ The drawing(s) filed on _____ is/are: a)☐ accepted or b)☐ objected to by the Examiner.

Applicant may not request that any objection to the drawing(s) be held in abeyance. See 37 CFR 1.85(a).

Replacement drawing sheet(s) including the correction is required if the drawing(s) is objected to. See 37 CFR 1.121(d).

11)☐ The oath or declaration is objected to by the Examiner. Note the attached Office Action or form PTO-152.

Priority under 35 U.S.C. § 119

12)☐ Acknowledgment is made of a claim for foreign priority under 35 U.S.C. § 119(a)-(d) or (f).

a)☐ All b)☐ Some * c)☐ None of:

1.☐ Certified copies of the priority documents have been received.

2.☐ Certified copies of the priority documents have been received in Application No. _____.

3.☐ Copies of the certified copies of the priority documents have been received in this National Stage application from the International Bureau (PCT Rule 17.2(a)).

* See the attached detailed Office action for a list of the certified copies not received.

Attachment(s)

1) ☐ Notice of References Cited (PTO-892)

2) ☐ Notice of Draftsperson's Patent Drawing Review (PTO-948)

3) ☐ Information Disclosure Statement(s) (PTO/SB/08) Paper No(s)/Mail Date _____.

4) ☐ Interview Summary (PTO-413) Paper No(s)/Mail Date. _____ .

5) ☐ Notice of Informal Patent Application

6) ☐ Other: _____.

1. The present application is being examined under the pre-AIA first to invent provisions.

DETAILED ACTION

Response to Arguments

2. Applicant's arguments filed 06/25/2014 have been fully considered but they are not persuasive.

In pages 4-6 of the remarks, applicant argues that nothing in Willis, however, discloses that "updated video-game content" is sent or uploaded "based on one of the factors including a type of the mobile communication device, a telecom service associated with the mobile communication device, and a service provider of the telecom service." because Willis discloses that advertising content is sent merely based on the geographic location of the gamer. The examiner respectfully disagrees. Willis discloses delivering advertising content to different types of mobile platforms (Willis paragraph 0023 e.g. laptop computer, personal digital assistant (PDA), mobile personal entertainment device, or mobile phone). Different mobile platforms have different capabilities. For example, it does not make sense to send a video-game content to a mobile device that can only display text. Therefore, Willis' video-game content" is sent or uploaded "based on a type of the mobile communication device" as recited in claim 15. Furthermore, Willis also discloses different mobile devices have different location determination technologies (Willis paragraph 0029). Since Willis' "updated video-game content" is location dependent, different software content may be sent to different types

of mobile devices as a result of different locations obtained by different location determination technologies implemented inside different types of devices.

In pages 6-7 of the remarks, applicant argues that Willis fails to disclose or render obvious "the video-game content is displayed in the video game for a predetermined period of time," as recited in claim 33. The examiner respectfully disagrees. Willis discloses “The geolocation of the mobile video game platform is optionally changed at any time including during game play” (Willis paragraph 0035, 0037). Since Willis’ “updated video-game content” is location dependent, if the location is updated for a predetermined period of time, the corresponding video-game content is also updated for a predetermined period of time. Therefore, Willis teaches the limitation of "the video-game content is displayed in the video game for a predetermined period of time".

In pages 7-9 of the remarks, applicant argues that Gatto fails to disclose or render obvious sending "information providing an in-game placement location associated with the updated video-game content," as recited in claim 18. The examiner respectfully disagrees. Gatto discloses “a diagram of a non-rectangular promotional layer 108 of an email ticket according to still another embodiment of the present invention. In FIG. 10, the player is invited to click on and twirl” (Gatto Fig. 10 paragraph 0051). Without the “location information” (where to display e.g. bottle cap in a screen), a mobile device will not be able to display the “non-rectangular promotional layer 108” correctly on a screen.

In pages 9-10 of the remarks, applicant argues that neither Willis nor Gatto discloses or teaches "tracking what has been uploaded to the mobile communication device," as recited in claim 19. The examiner respectfully disagrees. Willis discloses maintaining tracking data (Willis paragraph 0038). As mentioned in the Office Action, Gatto discloses the step of tracking (Gatto paragraph 0016, 0019 note: this reads on progressively reveal/replace i.e. "secret layer" is tracked) what has been uploaded to the mobile communication device. Therefore, contrary to applicant's argument, Willis alone or in combination with Gatto discloses "tracking what has been uploaded to the mobile communication device," as recited in claim 19.

Based on foregoing reasons, the previous rejection is still deemed proper.

Claim Rejections - 35 USC § 102

1. The following is a quotation of the appropriate paragraphs of 35 U.S.C. 102 that form the basis for the rejections under this section made in this Office action:

> A person shall be entitled to a patent unless –
>
> (b) the invention was patented or described in a printed publication in this or a foreign country or in public use or on sale in this country, more than one year prior to the date of application for patent in the United States.

2. Claims 15-17 and 33-35 are rejected under 35 U.S.C. 102(b) as being anticipated Willis (US 20060136297).

In regards to claim 15, Willis discloses a method for providing updated video-game content to a mobile communication device (Willis paragraph 0023) for use in a mobile video game (Willis paragraph 0014 note: this reads on “mobile video game”), the method comprising the steps of:

receiving a request (Willis Fig. 2 Item 200, paragraph 0029 note: the geolocation server receive a request from the mobile platform 310) for the updated video-game content from the mobile communication device, the updated video-game content (Willis paragraph 0014 note: this reads on “advertising content”) being usable in the video-game that already exists on the mobile communication device (Willis Fig. 1 Item 311, paragraph 0029);

checking what updated video-game content to send based on one of the factors including a type of the mobile communication device (Willis paragraph 0023 note: this reads on PDA, mobile phone…), a telecom service associated with the mobile communication device (Willis paragraph 0023 note: a mobile phone inherently requires a telecom service), and a service provider of the telecom service (Willis paragraph 0023 note: this reads service provider of the mobile phone); and

uploading updated video-game content to the communications device (Willis Fig. 2 Item 210 paragraph 0014, 0031), the video-game content being usable when the video game operates on the communications device.

In regards to claim 16, Willis discloses a method for providing updated content to a mobile communication device as described above. Willis further discloses the updated video-game content is promotional content (Willis paragraph 0014 note: this reads on “advertising content”).

In regards to claim 17, Willis discloses a method for providing updated content to a mobile communication device as described above. Willis further discloses the step of checking (Willis Fig. 2 step 200-208) whether the communications device should

receive the updated video-game content before uploading (Willis Fig. 2 step 210) the updated video-game content to the communications device.

In regards to claim 33, Willis discloses a method for providing updated content to a mobile communication device as described above. Willis further discloses the video-game content is displayed in the video game for a predetermined period of time (Willis paragraph 0032, 0035 and 0037 note: this reads on "schedules impressions of each advertising spot within the video game").

In regards to claim 34, Willis discloses a method for providing updated content to a mobile communication device as described above. Willis further discloses the video-game content is selected based on the location (Willis paragraph 0014) of the mobile communication device.

In regards to claim 35, Willis discloses a method for providing updated content to a mobile communication device as described above. Willis further discloses the video-game content is selected based on user information specific to a user of the mobile communication device (Willis paragraph 0030 note: home location is specific to a user).

Claim Rejections - 35 USC § 103

1. The following is a quotation of pre-AIA 35 U.S.C. 103(a) which forms the basis for all obviousness rejections set forth in this Office action:

> (a) A patent may not be obtained though the invention is not identically disclosed or described as set forth in section 102 of this title, if the differences between the subject matter sought to be patented and the prior art are such that the subject matter as a whole would have been obvious at the time the invention was made to a person having ordinary skill in the art to which said subject matter pertains. Patentability shall not be negatived by the manner in which the invention was made.

2. Claims 18, 19 and 32 are rejected under pre-AIA 35 U.S.C. 103(a) as being unpatentable over Willis in view of Gatto (US 20040127279).

In regards to claim 18, Willis discloses a method for providing updated content to a mobile communication device as described above. Willis fails to teach the step of sending information to the mobile communication device as part of the updated content, the information providing an in-game placement location associated with the updated video-game content. However, Gatto discloses the step of sending information to the mobile communication device as part of the updated content, the information providing an in-game placement location (Gatto paragraph 0051 note: this reads on “image”. an image requires pixel e.g. x, y locations) associated with the updated video-game content. It would have been obvious to a person of ordinary skill in the art at the time of invention to use Gatto’s image in Willis' video game for offering another dimension in gaming (Gatto paragraph 0008).

In regards to claim 19, Willis discloses a method for providing updated content to a mobile communication device as described above. Willis fails to teach the step of tracking what has been uploaded to the mobile communication device. However, Gatto discloses the step of tracking (Gatto paragraph 0016, 0019 note: this reads on progressively reveal/replace i.e. “secret layer” is tracked) what has been uploaded to the mobile communication device. It would have been obvious to a person of ordinary skill in the art at the time of invention to use Gatto’s tracking in Willis' video game for progressively transform the scrambled audio message into a clear intelligible audio message (Gatto paragraph 0016).

In regards to claim 32, Willis discloses a method for providing updated content to a mobile communication device as described above. Willis fails to teach displaying the video- game content within the game at a location based on user interaction. However, Gatto discloses displaying the video- game content within the game at a location (Gatto paragraph 0010 note: this reads on "displayed at a predetermined location") based on user interaction. It would have been obvious to a person of ordinary skill in the art at the time of invention to use Gatto's video game content in Willis' video game for offering another dimension in gaming (Gatto paragraph 0008).

Conclusion

3. **THIS ACTION IS MADE FINAL.** Applicant is reminded of the extension of time policy as set forth in 37 CFR 1.136(a).

A shortened statutory period for reply to this final action is set to expire THREE MONTHS from the mailing date of this action. In the event a first reply is filed within TWO MONTHS of the mailing date of this final action and the advisory action is not mailed until after the end of the THREE-MONTH shortened statutory period, then the shortened statutory period will expire on the date the advisory action is mailed, and any extension fee pursuant to 37 CFR 1.136(a) will be calculated from the mailing date of the advisory action. In no event, however, will the statutory period for reply expire later than SIX MONTHS from the mailing date of this final action.

Any inquiry concerning this communication or earlier communications from the examiner should be directed to HSIN-CHUN LIAO whose telephone number is

(571)270-7701. The examiner can normally be reached on Monday - Thursday, 8:00AM-4:00PM.

If attempts to reach the examiner by telephone are unsuccessful, the examiner's supervisor, Edward Urban can be reached on (571)272-7899. The fax phone number for the organization where this application or proceeding is assigned is 571-273-8300.

Information regarding the status of an application may be obtained from the Patent Application Information Retrieval (PAIR) system. Status information for published applications may be obtained from either Private PAIR or Public PAIR. Status information for unpublished applications is available through Private PAIR only. For more information about the PAIR system, see http://pair-direct.uspto.gov. Should you have questions on access to the Private PAIR system, contact the Electronic Business Center (EBC) at 866-217-9197 (toll-free). If you would like assistance from a USPTO Customer Service Representative or access to the automated information system, call 800-786-9199 (IN USA OR CANADA) or 571-272-1000.

/HSIN-CHUN LIAO/
Primary Examiner, Art Unit 2649

Index of Claims	Application/Control No.	Applicant(s)/Patent Under Reexamination
	11768892	HARTWELL, JOSHUA
	Examiner	**Art Unit**
	HSIN-CHUN LIAO	2618

✓	Rejected	-	Cancelled	N	Non-Elected	A	Appeal
=	Allowed	÷	Restricted	I	Interference	O	Objected

☐ Claims renumbered in the same order as presented by applicant ☐ CPA ☐ T.D. ☐ R.1.47

CLAIM		DATE								
Final	Original	05/02/2012	09/03/2012	12/31/2012	05/30/2013	03/11/2014	08/13/2014			
	1	÷	✓	-	-	-	-			
	2	÷	✓	-	-	-	-			
	3	÷	✓	-	-	-	-			
	4	÷	✓	-	-	-	-			
	5	÷	✓	-	-	-	-			
	6	÷	✓	-	-	-	-			
	7	÷	✓	-	-	-	-			
	8	÷	✓	-	-	-	-			
	9	÷	✓	-	-	-	-			
	10	÷	✓	-	-	-	-			
	11	÷	✓	-	-	-	-			
	12	÷	✓	-	-	-	-			
	13	÷	✓	-	-	-	-			
	14	÷	✓	-	-	-	-			
	15	÷	-	✓	✓	✓	✓			
	16	÷	-	✓	✓	✓	✓			
	17	÷	-	✓	✓	✓	✓			
	18	÷	-	✓	✓	✓	✓			
	19	÷	-	✓	✓	✓	✓			
	20	÷	-	-	-	-	-			
	21	÷	-	-	-	-	-			
	22	÷	-	-	-	-	-			
	23	÷	-	-	-	-	-			
	24	÷	-	-	-	-	-			
	25	÷	-	-	-	-	-			
	26	÷	-	-	-	-	-			
	27	÷	-	-	-	-	-			
	28	÷	-	-	-	-	-			
	29	÷	-	-	-	-	-			
	30	÷	-	-	-	-	-			
	31	÷	-	-	-	-	-			
	32				✓	✓	✓			
	33				✓	✓	✓			
	34				✓	✓	✓			
	35				✓	✓	✓			

PATENT
Customer No. 22,852
Attorney Docket No. 09685.0045-00000

IN THE UNITED STATES PATENT AND TRADEMARK OFFICE

In re Application of:	)	
	)	
Joshua HARTWELL	)	Group Art Unit: 2649
	)	
Application No.: 11/768,892	)	Examiner: Hsinchun Liao
	)	
Filed: June 26, 2007	)	
	)	
For: METHODS AND SYSTEMS FOR UPDATING IN-GAME CONTENT	)	Confirmation No.: 3817

Commissioner for Patents
P.O. Box 1450
Alexandria, Virginia 22313-1450

VIA EFS-Web

Dear Commissioner:

REPLY TO OFFICE ACTION

In reply to the Office Action mailed March 25, 2014, the period for response to which extends to June 25, 2014, please reconsider the above-identified application:

A **Listing of the Claims** begins on page 2 of this paper.

Remarks follow the Listing of the Claims in this paper.

LISTING OF THE CLAIMS

For the Examiner's convenience, a complete listing of the pending claims in this application is provided below. No claim amendments are presented with this response.

1-14. (Canceled)

15. (Previously Presented) A method for providing updated video-game content to a mobile communication device for use in a mobile video game, the method comprising the steps of:

receiving a request for the updated video-game content from the mobile communication device, the updated video-game content being usable in the video game that already exists on the mobile communication device;

checking what updated video-game content to send based on one of the factors including a type of the mobile communication device, a telecom service associated with the mobile communication device, and a service provider of the telecom service; and

uploading updated video-game content to the communications device, the video-game content being usable when the video game operates on the communications device.

16. (Previously Presented) The method of claim 15, wherein the updated video-game content is promotional content.

17. (Previously Presented) The method of claim 15, further comprising the step of checking whether the communications device should receive the updated video-game content before uploading the updated video-game content to the communications device.

18. (Previously Presented) The method of claim 15, further comprising the step of sending information to the mobile communication device as part of the updated content, the information providing an in-game placement location associated with the updated video-game content.

19. (Original) The method of claim 15, further comprising the step of tracking what has been uploaded to the mobile communication device.

20-31. (Canceled)

32. (Previously Presented) The method of claim 15, wherein uploading updated video-game content to the mobile communication device further comprises displaying the video-game content within the game at a location based on user interaction.

33. (Previously Presented) The method of claim 15, wherein the video-game content is displayed in the video game for a predetermined period of time.

34. (Previously Presented) The method of claim 15, wherein the video-game content is selected based on the location of the mobile communication device.

35. (Previously Presented) The method of claim 15, wherein the video-game content is selected based on user information specific to a user of the mobile communication device.

REMARKS

Applicant submits these Remarks in reply to the non-final Office Action mailed March 25, 2014. In the Office Action, Applicant understands that the Office has rejected claims 15-17 and 33-35 under 35 U.S.C. § 102(b) as being allegedly anticipated by U.S. Patent Application Publication No. 2006/0136297 ("*Willis*"). Applicant further understands that the Office has rejected claims 18, 19, and 32 under 35 U.S.C. § 103(a) as being allegedly unpatentable over *Willis* in view of U.S. Patent Application Publication No. 2004/0127279 ("*Gatto*").

Claims 15-19 and 32-35 are currently pending in this application, including independent claim 15. No amendments are presented with this reply. Applicant respectfully traverses all pending rejections for at least the reasons discussed below.

I. Claim Rejections Under 35 U.S.C. § 102(b) Based on *Willis*

Applicant respectfully traverses the rejection of claims 15-17 and 33-35 under 35 U.S.C. § 102(b). *Willis* does not disclose or teach each and every element of Applicant's claims.

To establish that a single reference anticipates Applicant's claims under 35 U.S.C. § 102, the Examiner must show that it discloses the "identical invention . . . in as complete detail as is contained in the . . . claim." *See* M.P.E.P. § 2131, quoting *Richardson v. Suzuki Motor Co.*, 868 F.2d 1126, 1236, 9 U.S.P.Q.2d 1913, 1920 (Fed. Cir. 1989). Additionally, the "elements must be arranged as required by the claim." *See* M.P.E.P. § 2131, citing *In re Bond*, 910 F.2d 831, 15 U.S.P.Q.2d 1566 (Fed. Cir. 1990). In this case, *Willis* does not disclose or teach all of the features of Applicant's claims.

For example, independent claim 15 recites a method for providing updated video-game content to a mobile communication device for use in a mobile video game, comprising, among other things, "checking what updated video-game content to send based on one of the factors including a type of the mobile communication device, a telecom service associated with the mobile communication device, and a service provider of the telecom service." Contrary to the assertions in the Office Action, *Willis* does not disclose at least the above subject matter of claim 15.

Willis relates to a system and method of "delivering dynamic content that is dependent on the geographic location (geolocation) of the recipient." *Willis* at ¶ [0002]. More specifically, *Willis* is directed to techniques for delivering advertising content to a gaming platform based on the location of the gaming platform. *Id.* at Abstract. According to *Willis*, a game instance communicates with a geolocation server to determine a playing location of a gamer and then provides this location information to an advertising broker. *Id.* at ¶¶ [0029]-[0031]. *Willis* discloses that the advertising broker determines both the appropriate content and the identities of advertisement service providers for serving the content to the platform. *Id.* at ¶ [0031]. The game instance then retrieves that content from an appropriate advertisement service provider. *Id.* at ¶ [0032].

In the Office Action, the Examiner asserts that *Willis* discloses "checking what updated video-game content to send based on one of the factors including a type of the mobile communication device, a telecom service associated with the mobile communication device, and a service provider of the telecom service" because *Willis* discloses that video games may be played on a variety of types of devices, such as a

PDA or mobile phone, and a mobile phone "inherently requires a telecom service" and is associated with a service provider. Office Action at 4. Nothing in *Willis*, however, discloses that "updated video-game content" is sent or uploaded "**based on** one of the factors including a type of the mobile communication device, a telecom service associated with the mobile communication device, and a service provider of the telecom service." Rather, *Willis* discloses that advertising content is sent merely based on the geographic location of the gamer. *Willis* at ¶¶ [0029]-[0032]. Regardless of whether the video game devices disclosed in *Willis* may be associated with a "type," "telecom service," and/or "service provider," nothing in *Willis* discloses that one of those characteristics, as claimed here, determines the advertising information sent to those devices according to *Willis*'s method.

Accordingly, for at least the above reasons, the Office Action has not established that *Willis* independently discloses or teaches all of the features of claim 15. Therefore, independent claim 15 is allowable over the prior art of record and the rejection of claim 15 should be withdrawn.

Claims 16, 17, and 33-35 depend from independent claim 15. Therefore, claims 16, 17, and 33-35 are allowable at least due to their dependence on an allowable base claim, and further in view of the additional features recited by these claims. Therefore, the rejections of claims 16, 17, and 33-35 under 35 U.S.C. § 102(b) should also be withdrawn.

II. Rejection of Claim 33 under 35 U.S.C. § 102(b)

In the Office Action, dependent claim 33 was rejected under 35 U.S.C. § 102(b) as being anticipated by *Willis*. Office Action at 5. Claim 33 recites "[t]he

method of claim 15, wherein the video-game content is displayed in the video game for a predetermined period of time." Because claim 33 depends from independent claim 15, it is patentable over *Willis* for at least the reasons outlined above. Further, nothing in *Willis* discloses or teaches the additional subject matter recited by claim 33.

For example, *Willis* fails to disclose or render obvious "the video-game content is displayed in the video game for a predetermined period of time," as recited in claim 33. In the Office Action, the Examiner contends that this subject matter is anticipated by *Willis*'s disclosure that the game instance "schedules impressions of each advertising spot within the video game . . . ." Office Action at 5 (citing *Willis* at ¶ [0032]). Yet, *Willis* fails to disclose that scheduling the impressions necessarily results in display of the advertisements for a "predetermined period of time."

Therefore, for at least the above reasons, Applicant respectfully requests withdrawal of the rejection under 35 U.S.C. § 102(b) of claim 33 based on *Willis*.

III. Rejection of Claim 18 under 35 U.S.C. § 103(a)

In the Office Action, dependent claim 18 was rejected under 35 U.S.C. § 103(a) as being allegedly unpatentable over *Willis* in view of *Gatto*. Office Action at 6. Claim 18 recites "[t]he method of claim 15, further comprising the step of sending information to the mobile communication device as part of the updated content, the information providing an in-game placement location associated with the updated video-game content." Because claim 18 depends from independent claim 15, it is patentable over *Willis* for at least the reasons outlined above. Moreover, *Gatto* fails to overcome the deficiencies of *Willis* with respect to claim 15, and the Office Action does not assert

otherwise. Further, neither *Willis* nor *Gatto* discloses or teaches the additional subject matter recited by claim 18.

For example, *Gatto* fails to disclose or render obvious sending "information providing an in-game placement location associated with the updated video-game content," as recited in claim 18. The Office Action contends that this subject matter is disclosed by *Gatto* at paragraph [0051], which states that "the player is invited to virtually 'twist' the bottle cap off to download some file, image or software program, such as a screensaver, for example." Office Action at 6; *Gatto* at ¶ [0051]. In particular, the Office states that "an image requires pixel e.g. x, y locations," thus implying that *Gatto*'s disclosure of downloading an image necessarily discloses "providing an in-game placement location." *See* Office Action at 6. Nothing in *Gatto* supports this assertion. Regardless of whether the downloaded image includes information on the locations of pixels within the image, which *Gatto* does not disclose, *Gatto* fails to disclose that any information is sent with the image that provides a "placement location" for the image itself. This is further reflected in part because *Gatto* is not concerned with a dynamic "video game," but instead a static email ticket, and in any event does not contemplate one or more placement locations within a video game that may be capable of displaying updated content, thus facilitating the provision of a particular location for particular content.

Moreover, the Office Action acknowledges that *Willis* "fails to teach the step of sending information to the mobile communication device as part of the updated content, the information providing an in-game placement location associated with the updated video-game content." Office Action at 6. Therefore, for at least the above reasons,

Applicant respectfully requests withdrawal of the rejection under 35 U.S.C. § 103(a) of claim 18 based on *Willis* and *Gatto*.

IV. Rejection of Claim 19 under 35 U.S.C. § 103(a)

In the Office Action, dependent claim 19 was rejected under 35 U.S.C. § 103(a) as being allegedly unpatentable over *Willis* in view of *Gatto*. Office Action at 6. Claim 19 recites "[t]he method of claim 15, further comprising the step of tracking what has been uploaded to the mobile communication device." Because claim 19 depends from independent claim 15, it is patentable over *Willis* for at least the reasons outlined above. Moreover, *Gatto* fails to overcome the deficiencies of *Willis* with respect to claim 15, and the Office Action does not assert otherwise. Further, neither *Willis* nor *Gatto* discloses or teaches the additional subject matter recited by claim 19.

For example, *Gatto* fails to disclose or render obvious "tracking what has been uploaded to the mobile communication device," as recited in claim 19. The Office Action alleges that *Gatto*'s disclosure of "progressively replac[ing]" a scrambled audio message or "progressively reveal[ing]" a portion of a secret layer discloses this subject matter (*see* Office Action at 6), but *Gatto* does not disclose "tracking" what information has been progressively replaced or revealed (*see Gatto* at ¶¶ [0016], [0019]). In any event, *Gatto* does not teach or suggest "tracking" any content that has been uploaded to a mobile device, such as to keep a record of the content that has been uploaded as may be needed or desired, for example, to verify the upload or to generate a list of uploaded content.

Moreover, the Office Action acknowledges that *Willis* "fails to teach the step of tracking what has been uploaded to the mobile communication device." Office Action at

6. Therefore, for at least the above reasons, Applicant respectfully requests withdrawal of the rejection under 35 U.S.C. § 103(a) of claim 19 based on *Willis* and *Gatto*.

V. Rejection of Claim 32 under 35 U.S.C. § 103(a)

Claim 32 is rejected under 35 U.S.C. § 103(a) as being unpatentable over *Willis* in view of *Gatto*. Applicant traverses the rejection. A *prima facie* case of obviousness has not been established.

Claim 32 depends from independent claim 15. Thus, claim 32 is patentably distinguishable from *Willis* for at least the reasons outlined above for claim 15. Further, *Gatto* fails to overcome the deficiencies of *Willis* with respect to claim 15, and the Office Action does not assert otherwise. For example, *Gatto* fails to disclose "checking what updated video-game content to send based on one of the factors including a type of the mobile communication device, a telecom service associated with the mobile communication device, and a service provider of the telecom service," as recited in independent claim 15.

Therefore, for at least the above reasons, Applicant respectfully requests withdrawal of the rejection under 35 U.S.C. § 103(a) of claim 32 based on *Willis* and *Gatto*.

VI. Conclusion

In view of the foregoing, Applicant submits that the pending claims are neither anticipated nor rendered obvious in view of the cited art. Applicant, therefore, respectfully requests the Examiner's reconsideration and continued examination of the application and the timely allowance of the pending claims.

Please grant any extensions of time required to enter this response and charge any additional required fees to Deposit Account 06-0916.

Respectfully submitted,

FINNEGAN, HENDERSON, FARABOW,
GARRETT & DUNNER, L.L.P.

Dated: June 25, 2014

By: /Jeff T. Watson/

Jeff T. Watson
Reg. No. 70,587
(404) 653-6551

Electronic Acknowledgement Receipt

EFS ID:	19409067
Application Number:	11768892
International Application Number:	
Confirmation Number:	3817
Title of Invention:	Methods and Systems for Updating In-Game Content
First Named Inventor/Applicant Name:	Joshua Hartwell
Customer Number:	22852
Filer:	Jeff Taylor Watson/Gwendolyn Ramsey
Filer Authorized By:	Jeff Taylor Watson
Attorney Docket Number:	09685.0045-00000
Receipt Date:	25-JUN-2014
Filing Date:	26-JUN-2007
Time Stamp:	15:14:31
Application Type:	Utility under 35 USC 111(a)

Payment information:

Submitted with Payment	no

File Listing:

Document Number	Document Description	File Name	File Size(Bytes)/ Message Digest	Multi Part /.zip	Pages (if appl.)
1		09685_0045_Reply.pdf	125314 d38e98d870ee4dfdd919a35de800d4e8717318f4	yes	11

	Multipart Description/PDF files in .zip description		
	Document Description	**Start**	**End**
	Amendment/Req. Reconsideration-After Non-Final Reject	1	1
	Claims	2	3
	Applicant Arguments/Remarks Made in an Amendment	4	11

Warnings:	
Information:	
Total Files Size (in bytes):	125314

This Acknowledgement Receipt evidences receipt on the noted date by the USPTO of the indicated documents, characterized by the applicant, and including page counts, where applicable. It serves as evidence of receipt similar to a Post Card, as described in MPEP 503.

New Applications Under 35 U.S.C. 111
If a new application is being filed and the application includes the necessary components for a filing date (see 37 CFR 1.53(b)-(d) and MPEP 506), a Filing Receipt (37 CFR 1.54) will be issued in due course and the date shown on this Acknowledgement Receipt will establish the filing date of the application.

National Stage of an International Application under 35 U.S.C. 371
If a timely submission to enter the national stage of an international application is compliant with the conditions of 35 U.S.C. 371 and other applicable requirements a Form PCT/DO/EO/903 indicating acceptance of the application as a national stage submission under 35 U.S.C. 371 will be issued in addition to the Filing Receipt, in due course.

New International Application Filed with the USPTO as a Receiving Office
If a new international application is being filed and the international application includes the necessary components for an international filing date (see PCT Article 11 and MPEP 1810), a Notification of the International Application Number and of the International Filing Date (Form PCT/RO/105) will be issued in due course, subject to prescriptions concerning national security, and the date shown on this Acknowledgement Receipt will establish the international filing date of the application.

PTO/SB/06 (09-11)
Approved for use through 1/31/2014. OMB 0651-0032
U.S. Patent and Trademark Office; U.S. DEPARTMENT OF COMMERCE
Under the Paperwork Reduction Act of 1995, no persons are required to respond to a collection of information unless it displays a valid OMB control number.

PATENT APPLICATION FEE DETERMINATION RECORD

Substitute for Form PTO-875

Application or Docket Number	Filing Date	
11/768,892	06/26/2007	☐ To be Mailed

ENTITY: ☒ LARGE ☐ SMALL ☐ MICRO

APPLICATION AS FILED – PART I

FOR	(Column 1) NUMBER FILED	(Column 2) NUMBER EXTRA	RATE ($)	FEE ($)
☐ BASIC FEE (37 CFR 1.16(a), (b), or (c))	N/A	N/A	N/A	
☐ SEARCH FEE (37 CFR 1.16(k), (i), or (m))	N/A	N/A	N/A	
☐ EXAMINATION FEE (37 CFR 1.16(o), (p), or (q))	N/A	N/A	N/A	
TOTAL CLAIMS (37 CFR 1.16(i))	minus 20 =	*	x $ =	
INDEPENDENT CLAIMS (37 CFR 1.16(h))	minus 3 =	*	x $ =	
☐ APPLICATION SIZE FEE (37 CFR 1.16(s))	If the specification and drawings exceed 100 sheets of paper, the application size fee due is $310 ($155 for small entity) for each additional 50 sheets or fraction thereof. See 35 U.S.C. 41(a)(1)(G) and 37 CFR 1.16(s).			
☐ MULTIPLE DEPENDENT CLAIM PRESENT (37 CFR 1.16(j))				
* If the difference in column 1 is less than zero, enter "0" in column 2.			TOTAL	

APPLICATION AS AMENDED – PART II

AMENDMENT

06/25/2014	(Column 1) CLAIMS REMAINING AFTER AMENDMENT		(Column 2) HIGHEST NUMBER PREVIOUSLY PAID FOR	(Column 3) PRESENT EXTRA	RATE ($)	ADDITIONAL FEE ($)
Total (37 CFR 1.16(i))	* 9	Minus	** 20	= 0	x $80 =	0
Independent (37 CFR 1.16(h))	* 1	Minus	***3	= 0	x $420 =	0
☐ Application Size Fee (37 CFR 1.16(s))						
☐ FIRST PRESENTATION OF MULTIPLE DEPENDENT CLAIM (37 CFR 1.16(j))						
					TOTAL ADD'L FEE	0

AMENDMENT

	(Column 1) CLAIMS REMAINING AFTER AMENDMENT		(Column 2) HIGHEST NUMBER PREVIOUSLY PAID FOR	(Column 3) PRESENT EXTRA	RATE ($)	ADDITIONAL FEE ($)
Total (37 CFR 1.16(i))	*	Minus	**	=	x $ =	
Independent (37 CFR 1.16(h))	*	Minus	***	=	x $ =	
☐ Application Size Fee (37 CFR 1.16(s))						
☐ FIRST PRESENTATION OF MULTIPLE DEPENDENT CLAIM (37 CFR 1.16(j))						
					TOTAL ADD'L FEE	

* If the entry in column 1 is less than the entry in column 2, write "0" in column 3.
** If the "Highest Number Previously Paid For" IN THIS SPACE is less than 20, enter "20".
*** If the "Highest Number Previously Paid For" IN THIS SPACE is less than 3, enter "3".
The "Highest Number Previously Paid For" (Total or Independent) is the highest number found in the appropriate box in column 1.

LIE
/Tina J. Barden/

This collection of information is required by 37 CFR 1.16. The information is required to obtain or retain a benefit by the public which is to file (and by the USPTO to process) an application. Confidentiality is governed by 35 U.S.C. 122 and 37 CFR 1.14. This collection is estimated to take 12 minutes to complete, including gathering, preparing, and submitting the completed application form to the USPTO. Time will vary depending upon the individual case. Any comments on the amount of time you require to complete this form and/or suggestions for reducing this burden, should be sent to the Chief Information Officer, U.S. Patent and Trademark Office, U.S. Department of Commerce, P.O. Box 1450, Alexandria, VA 22313-1450. DO NOT SEND FEES OR COMPLETED FORMS TO THIS ADDRESS. **SEND TO: Commissioner for Patents, P.O. Box 1450, Alexandria, VA 22313-1450.**
If you need assistance in completing the form, call 1-800-PTO-9199 and select option 2.

UNITED STATES PATENT AND TRADEMARK OFFICE

UNITED STATES DEPARTMENT OF COMMERCE
United States Patent and Trademark Office
Address: COMMISSIONER FOR PATENTS
P.O. Box 1450
Alexandria, Virginia 22313-1450
www.uspto.gov

APPLICATION NO.	FILING DATE	FIRST NAMED INVENTOR	ATTORNEY DOCKET NO.	CONFIRMATION NO.
11/768,892	06/26/2007	Joshua Hartwell	09685.0045-00000	3817

22852 7590 03/25/2014
FINNEGAN, HENDERSON, FARABOW, GARRETT & DUNNER LLP
901 NEW YORK AVENUE, NW
WASHINGTON, DC 20001-4413

EXAMINER
LIAO, HSINCHUN

ART UNIT	PAPER NUMBER
2649	

MAIL DATE	DELIVERY MODE
03/25/2014	PAPER

Please find below and/or attached an Office communication concerning this application or proceeding.

The time period for reply, if any, is set in the attached communication.

Office Action Summary	Application No.	Applicant(s)	
	11/768,892	HARTWELL, JOSHUA	
	Examiner	Art Unit	
	HSIN-CHUN LIAO	2649	

-- The MAILING DATE of this communication appears on the cover sheet with the correspondence address --

Period for Reply

A SHORTENED STATUTORY PERIOD FOR REPLY IS SET TO EXPIRE 3 MONTH(S) OR THIRTY (30) DAYS, WHICHEVER IS LONGER, FROM THE MAILING DATE OF THIS COMMUNICATION.

- Extensions of time may be available under the provisions of 37 CFR 1.136(a). In no event, however, may a reply be timely filed after SIX (6) MONTHS from the mailing date of this communication.
- If NO period for reply is specified above, the maximum statutory period will apply and will expire SIX (6) MONTHS from the mailing date of this communication.
- Failure to reply within the set or extended period for reply will, by statute, cause the application to become ABANDONED (35 U.S.C. § 133). Any reply received by the Office later than three months after the mailing date of this communication, even if timely filed, may reduce any earned patent term adjustment. See 37 CFR 1.704(b).

Status

1)☒ Responsive to communication(s) filed on *23 December 2013*.

2a)☐ This action is **FINAL**. 2b)☒ This action is non-final.

3)☐ Since this application is in condition for allowance except for formal matters, prosecution as to the merits is closed in accordance with the practice under *Ex parte Quayle*, 1935 C.D. 11, 453 O.G. 213.

Disposition of Claims

4)☒ Claim(s) *15-19 and 32-35* is/are pending in the application.

4a) Of the above claim(s) _____ is/are withdrawn from consideration.

5)☐ Claim(s) _____ is/are allowed.

6)☒ Claim(s) *15-19 and 32-35* is/are rejected.

7)☐ Claim(s) _____ is/are objected to.

8)☐ Claim(s) _____ are subject to restriction and/or election requirement.

Application Papers

9)☐ The specification is objected to by the Examiner.

10)☐ The drawing(s) filed on _____ is/are: a)☐ accepted or b)☐ objected to by the Examiner.

Applicant may not request that any objection to the drawing(s) be held in abeyance. See 37 CFR 1.85(a).

Replacement drawing sheet(s) including the correction is required if the drawing(s) is objected to. See 37 CFR 1.121(d).

11)☐ The oath or declaration is objected to by the Examiner. Note the attached Office Action or form PTO-152.

Priority under 35 U.S.C. § 119

12)☐ Acknowledgment is made of a claim for foreign priority under 35 U.S.C. § 119(a)-(d) or (f).

a)☐ All b)☐ Some * c)☐ None of:

1.☐ Certified copies of the priority documents have been received.

2.☐ Certified copies of the priority documents have been received in Application No. _____.

3.☐ Copies of the certified copies of the priority documents have been received in this National Stage application from the International Bureau (PCT Rule 17.2(a)).

* See the attached detailed Office action for a list of the certified copies not received.

Attachment(s)

1) ☐ Notice of References Cited (PTO-892)

2) ☐ Notice of Draftsperson's Patent Drawing Review (PTO-948)

3) ☐ Information Disclosure Statement(s) (PTO/SB/08) Paper No(s)/Mail Date _____.

4) ☐ Interview Summary (PTO-413) Paper No(s)/Mail Date. _____ .

5) ☐ Notice of Informal Patent Application

6) ☐ Other: _____.

1. In view of the appeal brief filed on 12/23/2013, PROSECUTION IS HEREBY REOPENED. A new ground of rejection is set forth below.

To avoid abandonment of the application, appellant must exercise one of the following two options:

(1) file a reply under 37 CFR 1.111 (if this Office action is non-final) or a reply under 37 CFR 1.113 (if this Office action is final); or,

(2) initiate a new appeal by filing a notice of appeal under 37 CFR 41.31 followed by an appeal brief under 37 CFR 41.37. The previously paid notice of appeal fee and appeal brief fee can be applied to the new appeal. If, however, the appeal fees set forth in 37 CFR 41.20 have been increased since they were previously paid, then appellant must pay the difference between the increased fees and the amount previously paid.

A Supervisory Patent Examiner (SPE) has approved of reopening prosecution by signing below:

/Edward Urban/

Supervisory Patent Examiner, Art Unit 2649

2. The present application is being examined under the pre-AIA first to invent provisions.

DETAILED ACTION

Response to Arguments

3. Applicant's arguments with respect to claims 15-19 and 32-35 have been considered but are moot because the arguments do not apply to any of the references being used in the current rejection.

Willis (US 20060136297) replaces Gatto (US 20040127279) to teach the limitations recited in the independent claim.

Claim Rejections - 35 USC § 102

1. The following is a quotation of the appropriate paragraphs of 35 U.S.C. 102 that form the basis for the rejections under this section made in this Office action:

> A person shall be entitled to a patent unless –
>
> (b) the invention was patented or described in a printed publication in this or a foreign country or in public use or on sale in this country, more than one year prior to the date of application for patent in the United States.

2. Claims 15-17 and 33-35 are rejected under 35 U.S.C. 102(b) as being anticipated Willis (US 20060136297).

In regards to claim 15, Willis discloses a method for providing updated video-game content to a mobile communication device (Willis paragraph 0023) for use in a mobile video game (Willis paragraph 0014 note: this reads on "mobile video game"), the method comprising the steps of:

receiving a request (Willis Fig. 2 Item 200, paragraph 0029 note: the geolocation server receive a request from the mobile platform 310) for the updated video-game

content from the mobile communication device, the updated video-game content (Willis paragraph 0014 note: this reads on “advertising content”) being usable in the video-game that already exists on the mobile communication device (Willis Fig. 1 Item 311, paragraph 0029);

checking what updated video-game content to send based on one of the factors including a type of the mobile communication device (Willis paragraph 0023 note: this reads on PDA, mobile phone…), a telecom service associated with the mobile communication device (Willis paragraph 0023 note: a mobile phone inherently requires a telecom service), and a service provider of the telecom service (Willis paragraph 0023 note: this reads service provider of the mobile phone); and

uploading updated video-game content to the communications device (Willis Fig. 2 Item 210 paragraph 0014, 0031), the video-game content being usable when the video game operates on the communications device.

In regards to claim 16, Willis discloses a method for providing updated content to a mobile communication device as described above. Willis further discloses the updated video-game content is promotional content (Willis paragraph 0014 note: this reads on “advertising content”).

In regards to claim 17, Willis discloses a method for providing updated content to a mobile communication device as described above. Willis further discloses the step of checking (Willis Fig. 2 step 200-208) whether the communications device should receive the updated video-game content before uploading (Willis Fig. 2 step 210) the updated video-game content to the communications device.

In regards to claim 33, Willis discloses a method for providing updated content to a mobile communication device as described above. Willis further discloses the video-game content is displayed in the video game for a predetermined period of time (Willis paragraph 0032 note: this reads on "schedules impressions of each advertising spot within the video game").

In regards to claim 34, Willis discloses a method for providing updated content to a mobile communication device as described above. Willis further discloses the video-game content is selected based on the location (Willis paragraph 0014) of the mobile communication device.

In regards to claim 35, Willis discloses a method for providing updated content to a mobile communication device as described above. Willis further discloses the video-game content is selected based on user information specific to a user of the mobile communication device (Willis paragraph 0030 note: home location is specific to a user).

Claim Rejections - 35 USC § 103

4. The following is a quotation of pre-AIA 35 U.S.C. 103(a) which forms the basis for all obviousness rejections set forth in this Office action:

> (a) A patent may not be obtained though the invention is not identically disclosed or described as set forth in section 102 of this title, if the differences between the subject matter sought to be patented and the prior art are such that the subject matter as a whole would have been obvious at the time the invention was made to a person having ordinary skill in the art to which said subject matter pertains. Patentability shall not be negatived by the manner in which the invention was made.

5. Claims 18, 19 and 32 are rejected under pre-AIA 35 U.S.C. 103(a) as being unpatentable over Willis in view of Gatto (US 20040127279).

In regards to claim 18, Willis discloses a method for providing updated content to a mobile communication device as described above. Willis fails to teach the step of sending information to the mobile communication device as part of the updated content, the information providing an in-game placement location associated with the updated video-game content. However, Gatto discloses the step of sending information to the mobile communication device as part of the updated content, the information providing an in-game placement location (Gatto paragraph 0051 note: this reads on “image”. an image requires pixel e.g. x, y locations) associated with the updated video-game content. It would have been obvious to a person of ordinary skill in the art at the time of invention to use Gatto’s image in Willis' video game for offering another dimension in gaming (Gatto paragraph 0008).

In regards to claim 19, Willis discloses a method for providing updated content to a mobile communication device as described above. Willis fails to teach the step of tracking what has been uploaded to the mobile communication device. However, Gatto discloses the step of tracking (Gatto paragraph 0016, 0019 note: this reads on progressively reveal/replace i.e. “secret layer” is tracked) what has been uploaded to the mobile communication device. It would have been obvious to a person of ordinary skill in the art at the time of invention to use Gatto’s tracking in Willis' video game for progressively transform the scrambled audio message into a clear intelligible audio message (Gatto paragraph 0016).

In regards to claim 32, Willis discloses a method for providing updated content to a mobile communication device as described above. Willis fails to teach displaying the

video- game content within the game at a location based on user interaction. However, Gatto discloses displaying the video- game content within the game at a location (Gatto paragraph 0010 note: this reads on “displayed at a predetermined location”) based on user interaction. It would have been obvious to a person of ordinary skill in the art at the time of invention to use Gatto’s video game content in Willis' video game for offering another dimension in gaming (Gatto paragraph 0008).

Conclusion

Any inquiry concerning this communication or earlier communications from the examiner should be directed to HSIN-CHUN LIAO whose telephone number is (571)270-7701. The examiner can normally be reached on Monday - Thursday, 8:00AM-4:00PM.

If attempts to reach the examiner by telephone are unsuccessful, the examiner’s supervisor, Edward Urban can be reached on (571)272-7899. The fax phone number for the organization where this application or proceeding is assigned is 571-273-8300.

Information regarding the status of an application may be obtained from the Patent Application Information Retrieval (PAIR) system. Status information for published applications may be obtained from either Private PAIR or Public PAIR. Status information for unpublished applications is available through Private PAIR only. For more information about the PAIR system, see http://pair-direct.uspto.gov. Should you have questions on access to the Private PAIR system, contact the Electronic Business Center (EBC) at 866-217-9197 (toll-free). If you would like assistance from a USPTO Customer Service Representative or access to the automated information system, call 800-786-9199 (IN USA OR CANADA) or 571-272-1000.

/HSIN-CHUN LIAO/
Examiner, Art Unit 2649

/Edward Urban/

Supervisory Patent Examiner, Art Unit 2649

Index of Claims	Application/Control No.	Applicant(s)/Patent Under Reexamination
	11768892	HARTWELL, JOSHUA
	Examiner	**Art Unit**
	HSIN-CHUN LIAO	2618

✓	Rejected	-	Cancelled	N	Non-Elected	A	Appeal
=	Allowed	÷	Restricted	I	Interference	O	Objected

☐ Claims renumbered in the same order as presented by applicant ☐ CPA ☐ T.D. ☐ R.1.47

CLAIM		DATE								
Final	Original	05/02/2012	09/03/2012	12/31/2012	05/30/2013	03/11/2014				
	1	÷	✓	-	-	-				
	2	÷	✓	-	-	-				
	3	÷	✓	-	-	-				
	4	÷	✓	-	-	-				
	5	÷	✓	-	-	-				
	6	÷	✓	-	-	-				
	7	÷	✓	-	-	-				
	8	÷	✓	-	-	-				
	9	÷	✓	-	-	-				
	10	÷	✓	-	-	-				
	11	÷	✓	-	-	-				
	12	÷	✓	-	-	-				
	13	÷	✓	-	-	-				
	14	÷	✓	-	-	-				
	15	÷	-	✓	✓	✓				
	16	÷	-	✓	✓	✓				
	17	÷	-	✓	✓	✓				
	18	÷	-	✓	✓	✓				
	19	÷	-	✓	✓	✓				
	20	÷	-	-	-	-				
	21	÷	-	-	-	-				
	22	÷	-	-	-	-				
	23	÷	-	-	-	-				
	24	÷	-	-	-	-				
	25	÷	-	-	-	-				
	26	÷	-	-	-	-				
	27	÷	-	-	-	-				
	28	÷	-	-	-	-				
	29	÷	-	-	-	-				
	30	÷	-	-	-	-				
	31	÷	-	-	-	-				
	32				✓	✓				
	33				✓	✓				
	34				✓	✓				
	35				✓	✓				

PATENT
Attorney Docket No. 09685.0045-00000

IN THE UNITED STATES PATENT AND TRADEMARK OFFICE

In re Application of:	)	
	)	
Joshua HARTWELL	)	Group Art Unit: 2649
	)	
Application No.: 11/768,892	)	Examiner: Hsinchun Liao
	)	
Filed: June 26, 2007	)	
	)	
For: METHODS AND SYSTEMS FOR UPDATING IN-GAME CONTENT	)	Confirmation No.: 3817

Attention: Mail Stop Appeal Brief-Patents
Commissioner for Patents
P.O. Box 1450
Alexandria, VA 22313-1450

Dear Commissioner:

APPEAL BRIEF UNDER BOARD RULE § 41.37

In support of the Notice of Appeal filed September 5, 2013, and further to Board Rule 41.37, Appellant presents this brief.

This Appeal responds to the Final Office Action mailed June 5, 2013, which finally rejected claims 15-19 and 32-35, and the Notice of Panel Decision from Pre-Appeal Brief Review mailed October 22, 2013. The pending claims are set forth in the attached Claims Appendix.

If any additional fees are required or if the enclosed payment is insufficient, Appellant requests that the required fees be charged to Deposit Account No. 06-0916.

Table of Contents

I. Real Party in Interest 3

II. Related Appeals and Interferences 4

III. Summary of Claimed Subject Matter 5

IV. Argument 7

V. Claims Appendix 21

VI. Evidence Appendix 23

VII. Related Proceedings Appendix 24

I. Real Party In Interest

GOSUB 60, Inc. is the real party in interest.

II. Related Appeals and Interferences

There are currently no other prior or pending appeals, interferences, or judicial proceedings of which Appellant, Appellant's legal representative, or Assignee are aware, that may be related to, directly affect, be directly affected by, or have a bearing on the Board's decision in the pending appeal.

III. Summary of Claimed Subject Matter

Of the appealed claims, claim 15 is the sole independent claim. A concise explanation of the subject matter of claim 15, referring to the specification by paragraph number, and to the drawings by reference characters, is set forth below. Claims 16-19 and 32-35 are the dependent claims involved in this appeal.

Independent claim 15 recites a method for "providing updated video-game content to a mobile communication device for use in a mobile video game." *See*, *e.g.*, Specification ¶¶ [0001], [0015], Fig. 4A, Fig. 4B. The method includes "receiving a request for the updated video-game content from the mobile communication device, the updated video-game content being usable in the video game that already exists on the mobile communication device." *See*, *e.g.*, Specification ¶¶ [0015], [0031], [0089], [0092], Fig. 4A (430), Fig. 4B (420, 430).

The method of claim 15 also includes "checking what updated video-game content to send based on one of the factors including a type of the mobile communication device, a telecom service associated with the mobile communication device, and a service provider of the telecom service." *See*, *e.g.*, Specification ¶¶ [0078], [0089], [0090], [0096], Fig. 4A (430, 450), Fig. 4B (440). Further, claim 15 recites "uploading updated video-game content to the communications device." *See*, *e.g.*, Specification ¶¶ [0090], [0099], Fig. 4A (450), Fig. 4B (450). According to claim 15, "the video-game content [is] usable when the video game operates on the communications device." *See*, *e.g.*, Specification ¶¶ [0015], [0031], [0053], [0086], Fig. 3A (340), Fig. 3B (340).

The foregoing summary of the presently claimed subject matter indicates portions of the specification (including the drawings) that provide examples of embodiments of elements of the claimed subject matter. It is to be understood that other portions of the specification not cited herein may also provide examples of embodiments of elements of the claimed subject matter. It is also to be understood that the indicated examples are merely examples, and the scope of the claimed subject matter includes alternative embodiments and equivalents thereof. References herein to the specification are thus intended to be exemplary and not limiting.

IV. Argument

In the Final Office Action, claims 15-19, 32, 33, and 35 are rejected under 35 U.S.C. § 102(b) as allegedly anticipated by U.S. Patent Publication No. 2004/0127279 ("*Gatto*").[1] Further, claim 34 is rejected under 35 U.S.C. § 103(a) as allegedly obvious over *Gatto* in view of U.S. Patent Publication No. 2006/0136297 ("*Willis*").

Appellant submits that the pending claims are allowable over the cited references and requests the Board reverse the final rejections.

A. Rejection of Claims 15-19, 32, 33, and 35 under 35 U.S.C. § 102(b)

Appellant respectfully traverses the rejection of claims 15-19, 32, 33, and 35 under 35 U.S.C. § 102(b). To establish that a single reference anticipates Appellant's claims under 35 U.S.C. § 102, the Examiner must show that it discloses the "identical invention . . . in as complete detail as is contained in the . . . claim." *See* M.P.E.P. § 2131 (quoting *Richardson v. Suzuki Motor Co.*, 868 F.2d 1126, 1236, 9 U.S.P.Q.2d 1913, 1920 (Fed. Cir. 1989)). Additionally, the "elements must be arranged as required by the claim." *See* M.P.E.P. § 2131 (citing *In re Bond*, 910 F.2d 831, 15 U.S.P.Q.2d 1566 (Fed. Cir. 1990)). Here, *Gatto* does not disclose or teach all of the elements of Appellant's independent claim 15, and thus cannot anticipate.

[1] The Final Office Action states only that claims 15-19 have been rejected on this basis (*see* Final Office Action at 3, § 2), but also provides explanations of rejections for claims 32, 33, and 35 (*see* Final Office Action at 5). Accordingly, for purposes of this Brief, Appellant has treated claims 32, 33, and 35 as rejected on this basis. If the Office intended a different rejection or status for these claims, the Office is respectfully requested to withdraw the Final Office Action and issue a new Office Action to which Appellant may properly respond or appeal.

1. The General Disclosure of *Gatto*

Gatto relates generally to "an email ticket that provides an email ticket recipient an opportunity to win a prize . . . ." *Gatto* at ¶ [0010]. According to *Gatto*, the email ticket comprises a secret layer and a promotional layer. *Id*. The secret layer may be configured to be "initially hidden from view and gradually revealed following a predetermined action by the email recipient," such as a "twirling action of a pointing device." *See id*. at ¶¶ [0010], [0015]. The promotional layer may be configured to "initially obscure the secret layer and to progressively reveal at least a portion of the secret layer following the predetermined action by the email recipient." *Id*. at ¶ [0010]. Moreover, the promotional layer may include hyperlinks, which "may be an Internet hyperlink configured to enable the email recipient to download and install software." *Id.* at ¶ [0013]. *Gatto* also discloses that the hyperlinks may be used "to download promotional items, or to learn about the company, obtain news or shop at an online store, for example." *Id*. at ¶ [0051].

2. *Gatto* does not disclose a "video game."

The Final Office Action appears to assert that *Gatto*'s disclosure of "hyperlinks to download promotional items" corresponds to "a request for the updated video-game content," as recited in independent claim 15. The Office also appears to assert that the promotional items returned in response to a user clicking on a hyperlink in an email are "updated video-game content." *See* Final Office Action at 3. But the email ticket described in *Gatto* is not a "video game," as required by Appellant's claims.

An exemplary video game—a darts game—is described in paragraphs [0045] to [0049] and shown in Figs. 2A-2B of the present application, and is substantively

different from *Gatto*'s "email ticket" in functionality, usability, and basic premise. Video games, even the somewhat basic darts game detailed in the application, involve more detailed game play and/or strategy. *Gatto*'s "email ticket" is clearly for single use in an effort for the user to determine simply whether or not a prize has been won. *See, e.g.*, *Gatto* at ¶ [0065]. There is but one action possible for the "email ticket"—to "scratch" it to determine if a prize has been won. That is not a video game, as would be understood by one of ordinary skill in the art. Tellingly, *Gatto* never states that its alleged inventions relate to a "video game," or even uses those words.

The video games disclosed and claimed here are not single use and have inherent complexity beyond *Gatto*'s single purpose, single action disclosure. The present specification discusses, for example, that updated content for the claimed video games may include "a new level" and the ability "to keep game elements fresh and prolong user enjoyment of the game." Specification at ¶ [0031]. As another example, "a particular scene within the game may be rearranged so that the user has something new to look at and explore." *Id.* These exemplary elements clearly distinguish the claimed video game from *Gatto*'s "email ticket."

The Final Office Action cites to paragraph [0008] of *Gatto* in apparent support for the Examiner's assertion that an "email ticket" is a "video game." *See* Final Office Action at 3. But that paragraph merely characterizes the "present invention" of *Gatto* as offering "another dimension in the Internet gaming." *See Gatto* at ¶ [0008]. Internet gaming in that context is not a "video game." Rather, internet gaming refers to gambling in order to win prizes or money. *See id.* at Abstract; Fig. 1. *Gatto* also uses the "internet gaming" in reference to "numerous sites on the Web offering casino and lottery

games." *Gatto* at ¶ [0005]. For this reason, *Gatto* discusses the virtual "scratching" of a prize ticket. *See Gatto* at ¶ [0050]. A person of ordinary skill would not understand *Gatto*'s "internet gaming" disclosure to refer to the claimed video game, for example, because video games do not involve winning money or a physical prize. Nowhere in the present disclosure does Applicant indicate that the claimed "video game" would result in the user winning money or a physical prize. As "internet gaming" is not a "video game," *Gatto* does not disclose an element of the present claims and therefore cannot anticipate.

3. *Gatto* does not disclose updating a video game, or the use of updated content in a video game.

Independent claim 15 recites "updated video-game content . . . usable in the video game that already exists on the mobile communication device" and "usable when the video game operates on the communications device." As discussed above, the Final Office Action appears to contend that an email ticket, which may include hyperlinks for promotional items, is the "video game" recited in Appellant's claim 15. *See* Final Office Action at 2-4. *Gatto* does not disclose "updating" a "video game," or content that is "useable" in a video game or when the video game operates, as recited in the pending claims.

As to "updating," *Gatto* teaches only that "promotional items" are downloaded in response to a user clicking on a hyperlink included in its email ticket. *See Gatto* at ¶ [0051]. But nothing in *Gatto* discloses that these promotional items "update" the email ticket when they are downloaded. In the context of the pending claims, "update" refers to exchanging or supplementing in-game content with new or different content. *See, e.g.*, Specification at ¶¶ [0031] & [0035]. As an example, existing elements within the

game may change, such as labels on beer bottles that are changed to display a new or different corporate logo or brand. As another example, wholly new elements may be added to the game, such as a new playing level. In *Gatto*, however, the email ticket itself is static and **not** updated once it is sent to a user to "play." The ticket itself is always the same. Thus, even if *Gatto*'s email ticket is taken to be a "video game" (which it is not), there is no "content" in that ticket that is "update[d]," as required by the pending claims here. *Gatto* cannot anticipate.

Gatto also does not teach or suggest any updated content that is "useable in" a video game. The available hyperlink is not updated content within the email ticket itself, but instead causes the download of an entirely separate program or Internet page. *See Gatto* at ¶ [0011]. For example, Fig. 10 of *Gatto* depicts a diagram of a promotional layer of an email ticket. *See Gatto* at ¶ [0051], Fig. 10 (108). According to *Gatto*, the email ticket may feature "hyperlinks 1004, 1006 to download promotional items, or to learn about the company, obtain news or shop at an online store, for example." *See Gatto* at ¶ [0051]. Hyperlink 1004 is a hyperlink to a "Sensation Screen Saver" and hyperlink 1006 includes hyperlinks that read "About the Company," "News at Coke," and "Coca-Cola Store." *See Gatto* at Fig. 10 (1004, 1006). Thus, the "hyperlinks to download promotional items" to which the Examiner cites for this subject matter refers to the "Sensation Screen Saver," which would appear to function to download a screen saver to the user's device. *See* Final Office Action at 3; *Gatto* at ¶ [0051], Fig. 10 (1004). Nothing in *Gatto* discloses that the screen saver would be usable inside and as part of the email ticket itself (i.e., the alleged "video game"). Rather, based on the typical operation of screen savers, a person of ordinary skill would readily understand

that the screen saver would be activated separately from and outside of the email ticket based on a period of inactivity at the user's device. Similarly, nothing in *Gatto* discloses that any information downloaded in response to selecting the "About the Company," "News at Coke," or "Coca-Cola Store" hyperlinks would even be presented inside or as part of the email ticket itself, as opposed to within a separate application (e.g., a web browser). Therefore, *Gatto* also fails to disclose any updated "promotional items" or content that would be "**usable in"** the email ticket or a "video game" itself, as opposed to a separate application program. As *Gatto* does not disclose these claim elements, it cannot anticipate.

4. *Gatto* does not disclose checking what content to send based upon a listed factor.

Independent claim 15 also recites "checking what updated video-game content to send based on one of the factors including a type of the mobile communication device, a telecom service associated with the mobile communication device, and a service provider of the telecom service." *Gatto* does not teach or suggest this claim clement.

As cited by the Examiner, *Gatto* states that the scratching effects included in the original email ticket sent to a user may be "based on multidimensional objects that can be rendered on the email recipient's computer and/or other computing device." *See Gatto* at ¶ [0050]. This relates merely to providing a method of activating the email ticket that is capable of being performed on the user's device. The scratching or other effects, as well as the "secret symbols" revealed in response to a user scratching the email ticket, were already present as part of the original email ticket received by the user. *See id.* Thus, there would be no need to "check[] what updated video-game content to send" to the user in response to the user scratching the email ticket, because

all of the content (e.g., the secret symbols) are provided as part of the original email ticket. *See id.*

Moreover, nothing else in *Gatto* discloses checking what content to send the user's device "based on one of the factors including a type of the mobile communication device, a telecom service associated with the mobile communication device, and a service provider of the telecom service," as recited in claim 15. Indeed, *Gatto* does not have any discussion or suggestion of updating in-game content based upon the type of device, the telecom service, and/or the service provider. *Gatto* does not describe the elements, and the Examiner has not pointed to any disclosure within *Gatto* that allegedly describes them. *Gatto* is wholly deficient in any teaching or suggestion of this claim element, and therefore cannot anticipate under § 102(b).

5. The Section 102(b) rejection cannot properly rely upon multiple references.

In response to Appellant's previous arguments regarding the deficiencies of *Gatto* with respect to the subject matter of the pending claims, the Final Office Action states: "Additionally, Willis (US 20060136297) also discloses updating promotional content in a video game (Willis paragraph 0014)." Final Office Action at 2. Appellant submits that it is improper for a rejection under 35 U.S.C. § 102(b) to rely on more than one reference. *See* M.P.E.P. § 2131. To the extent the anticipation rejection relies upon *Gatto* in conjunction with *Willis*, it is per se improper and should be reversed.

B. Rejection of Claim 17 under 35 U.S.C. § 102(b)

In the Final Office Action, dependent claim 17 was rejected under 35 U.S.C. § 102(b) as being anticipated by *Gatto*. Final Office Action at 4. Claim 17 recites "[t]he method of claim 15, further comprising the step of checking whether the

communications device should receive the updated video-game content before uploading the updated video-game content to the communications device." Because claim 17 depends from independent claim 15, it is patentable over *Gatto* for at least the reasons outlined above. Further, nothing in *Gatto* discloses or teaches the additional subject matter recited by claim 17.

For example, *Gatto* fails to disclose or render obvious "checking whether the communications device should receive the updated video-game content before uploading the updated video-game content to the communications device," as recited in claim 17. For this subject matter, the Final Office Action cites to a portion of *Gatto* pertaining to a "secure distribution process" and "secure validation and claiming process" for email tickets. Final Office Action at 4 (citing *Gatto* at ¶ [0009]). The cited distribution and validation processes relate only to the manner in which email tickets are distributed and validated (e.g., "securely") —not to "checking whether the communications device should receive the updated video-game content." *See Gatto* at ¶ [0009]. The Final Office Action also cites to *Gatto*'s paragraph [0050] for this subject matter (*see* Final Office Action at 4), but that paragraph merely describes advanced display graphics rendering capabilities that may be provided by plug-in software. *See Gatto* at ¶ [0050]. Nothing in paragraph [0050], or any other portion of *Gatto*, discloses or teaches "checking whether the communications device should receive the updated video-game content before uploading the updated video-game content to the communications device." Therefore, the rejection of claim 17 under 35 U.S.C. § 102(b) should be reversed by the Board.

C. Rejection of Claim 18 under 35 U.S.C. § 102(b)

In the Final Office Action, dependent claim 18 was rejected under 35 U.S.C. § 102(b) as being anticipated by *Gatto*. Final Office Action at 4. Claim 18 recites "[t]he method of claim 15, further comprising the step of sending information to the mobile communication device as part of the updated content, the information providing an in-game placement location associated with the updated video-game content." Because claim 18 depends from independent claim 15, it is patentable over *Gatto* for at least the reasons outlined above. Further, nothing in *Gatto* discloses or teaches the additional subject matter recited by claim 18.

For example, *Gatto* fails to disclose or render obvious sending "information providing an in-game placement location associated with the updated video-game content," as recited in claim 18. The Final Office Action contends that this subject matter is disclosed by *Gatto* at paragraph [0051], which states that "the player is invited to virtually 'twist' the bottle cap off to download some file, image or software program, such as a screensaver, for example." Final Office Action at 4; *Gatto* at ¶ [0051]. In particular, the Office states that "an image requires pixel e.g. x, y locations," thus implying that *Gatto*'s disclosure of downloading an image necessarily discloses "providing an in-game placement location." *See* Final Office Action at 4. Nothing in *Gatto* supports this assertion. Regardless of whether the downloaded image includes information on the locations of pixels within the image, which *Gatto* does not disclose, *Gatto* fails to disclose that any information is sent with the image that provides a "placement location" for the image itself. This is further reflected in part because *Gatto* is not concerned with a "video game," but instead a static email ticket, and in any event does not contemplate one or more placement locations within a video game that may be

capable of displaying updated content, thus facilitating the provision of a particular location for particular content. Therefore, the rejection of claim 18 under 35 U.S.C. § 102(b) should be reversed by the Board.

D. Rejection of Claim 19 under 35 U.S.C. § 102(b)

In the Final Office Action, dependent claim 19 was rejected under 35 U.S.C. § 102(b) as being anticipated by *Gatto*. Final Office Action at 4-5. Claim 19 recites "[t]he method of claim 15, further comprising the step of tracking what has been uploaded to the mobile communication device." Because claim 19 depends from independent claim 15, it is patentable over *Gatto* for at least the reasons outlined above. Further, nothing in *Gatto* discloses or teaches the additional subject matter recited by claim 19.

For example, *Gatto* fails to disclose or render obvious "tracking what has been uploaded to the mobile communication device," as recited in claim 19. The Final Office Action alleges that *Gatto*'s disclosure of "progressively replac[ing]" a scrambled audio message or "progressively reveal[ing]" a portion of a secret layer discloses this subject matter (*see* Final Office Action at 4-5), but *Gatto* does not disclose "tracking" what information has been progressively replaced or revealed (*see Gatto* at ¶¶ [0016], [0019]). In any event, *Gatto* does not teach or suggest "tracking" any content that has been uploaded to a mobile device, such as to keep a record of the content that has been uploaded as may be needed or desired, for example, to verify the upload or to generate a list of uploaded content. Therefore, the rejection of claim 19 under 35 U.S.C. § 102(b) should be reversed by the Board.

E. Rejection of Claim 33 under 35 U.S.C. § 102(b)

In the Final Office Action, dependent claim 33 was rejected under 35 U.S.C. § 102(b) as being anticipated by *Gatto*. Final Office Action at 5. Claim 33 recites "[t]he method of claim 15, wherein the video-game content is displayed in the video game for a predetermined period of time." Because claim 33 depends from independent claim 15, it is patentable over *Gatto* for at least the reasons outlined above. Further, nothing in *Gatto* discloses or teaches the additional subject matter recited by claim 33.

For example, *Gatto* fails to disclose or render obvious "the video-game content is displayed in the video game for a predetermined period of time," as recited in claim 33. In the Office Action, the Examiner contends that this subject matter is anticipated by *Gatto*'s disclosure of revealing secret symbols after "a predetermined time-out." Final Office Action at 5 (citing *Gatto* at ¶ [0008]). Although *Gatto* discloses that "a predetermined time-out" will cause certain information to be displayed to a user (*see Gatto* at ¶ [0008]), nothing in *Gatto* discloses **how long** that information will be displayed. Thus, *Gatto* fails to disclose that the information is displayed in its email ticket "for a predetermined period of time." Moreover, *Gatto* says nothing about the period of time during which content may be displayed, and in particular video-game content to be displayed in a video game. Therefore, the rejection of claim 33 under 35 U.S.C. § 102(b) should be reversed by the Board.

F. Rejection of Claim 35 under 35 U.S.C. § 102(b)

In the Final Office Action, dependent claim 35 was rejected under 35 U.S.C. § 102(b) as being anticipated by *Gatto*. Final Office Action at 5. Claim 35 recites "[t]he method of claim 15, wherein the video-game content is selected based on user information specific to a user of the mobile communication device." Because claim 35

depends from independent claim 15, it is patentable over *Gatto* for at least the reasons outlined above. Further, nothing in *Gatto* discloses or teaches the additional subject matter recited by claim 35.

For example, *Gatto* fails to disclose or render obvious "the video-game content is selected based on user information specific to a user of the mobile communication device," as recited in claim 35. The Final Office Action contends that this subject matter is disclosed by *Gatto* because "email is specific to a user" (*see* Final Office Action at 5 (citing *Gatto* at ¶ [0008])), but nothing in *Gatto* discloses that "video-game content is selected based on" a user's email address. Moreover, while many emails may generally be addressed to a particular user or email account, the email itself is not necessarily specific to a user, as commonly reflected by mass email messages or "spam." *Gatto* does not teach or suggest anything about selecting content (for display within a video game) based upon user information specific to a user of a mobile communication device (such as, for example, a user's playing habits, skill level, usage history, or other installed games or applications). Indeed, *Gatto*'s email ticket does not appear to have selected or displayed any particular content based upon the user information specific to a particular user. Therefore, the rejection of claim 35 under 35 U.S.C. § 102(b) should be reversed by the Board.

G. Rejection of Claim 34 under 35 U.S.C. § 103(a)

In the Final Office Action, dependent claim 34 was rejected under 35 U.S.C. § 103(a) as being obvious over *Gatto* and *Willis*. Final Office Action at 5. Claim 34 recites "[t]he method of claim 15, wherein the video-game content is selected based on the location of the mobile communication device." Because claim 34 depends from independent claim 15, it is patentable over *Gatto* for at least the reasons outlined above.

Further, *Willis* fails to cure the deficiencies of *Gatto* that are discussed above. Indeed, the Final Office Action does not contend otherwise.

For example, *Willis* fails to disclose that its advertising content may be specifically "based on one of the factors including a type of the mobile communication device, a telecom service associated with the mobile communication device, and a service provider of the telecom service," as recited in Appellant's independent claim 15. Neither of the cited references teach or suggest this claim limitation, and thus the Office has no evidence of record to support a rejection that the claimed subject matter would not have been obvious to one of ordinary skill in the art at the time of the claimed inventions. Therefore, the rejection of claim 34 under 35 U.S.C. § 103(a) should be reversed by the Board.

H. Conclusion

For at least the foregoing reasons, pending claims 15-19 and 32-35 are allowable over the cited art of record and reversal of the final rejections is respectfully requested.

As Appellant's remarks with respect to the final rejections are sufficient to overcome these rejections, Appellant's silence as to assertions in the Final Office Action or certain requirements that may be applicable to such rejections (e.g., whether a reference constitutes prior art, or assertions as to patentability of dependent claims) is not a concession by Appellant that such assertions are accurate or such requirements have been met, and Appellant reserves the right to analyze and dispute such in the future.

To the extent any extension of time under 37 C.F.R. § 1.136 is required to obtain entry of this Appeal Brief, such extension is hereby respectfully requested. If there are

any fees due under 37 C.F.R. §§ 1.16 or 1.17 which are not enclosed herewith, including any fees required for an extension of time under 37 C.F.R. § 1.136, please charge such fees to our Deposit Account No. 06-0916.

Respectfully submitted,

FINNEGAN, HENDERSON, FARABOW,
GARRETT & DUNNER, L.L.P.

/Jeff T. Watson/

Dated: December 23, 2013 By:_____

Jeff T. Watson
Reg. No. 70,587

V. Claims Appendix

1-14. (Canceled)

15. (Previously Presented) A method for providing updated video-game content to a mobile communication device for use in a mobile video game, the method comprising the steps of:

receiving a request for the updated video-game content from the mobile communication device, the updated video-game content being usable in the video game that already exists on the mobile communication device;

checking what updated video-game content to send based on one of the factors including a type of the mobile communication device, a telecom service associated with the mobile communication device, and a service provider of the telecom service; and

uploading updated video-game content to the communications device, the video-game content being usable when the video game operates on the communications device.

16. (Previously Presented) The method of claim 15, wherein the updated video-game content is promotional content.

17. (Previously Presented) The method of claim 15, further comprising the step of checking whether the communications device should receive the updated video-game content before uploading the updated video-game content to the communications device.

18. (Previously Presented) The method of claim 15, further comprising the step of sending information to the mobile communication device as part of the updated content, the information providing an in-game placement location associated with the updated video-game content.

19. (Original) The method of claim 15, further comprising the step of tracking what has been uploaded to the mobile communication device.

20-31. (Canceled)

32. (Previously Presented) The method of claim 15, wherein uploading updated video-game content to the mobile communication device further comprises displaying the video-game content within the game at a location based on user interaction.

33. (Previously Presented) The method of claim 15, wherein the video-game content is displayed in the video game for a predetermined period of time.

34. (Previously Presented) The method of claim 15, wherein the video-game content is selected based on the location of the mobile communication device.

35. (Previously Presented) The method of claim 15, wherein the video-game content is selected based on user information specific to a user of the mobile communication device.

VI. Evidence Appendix

No additional evidence is cited herein.

VII. Related Proceedings Appendix

No related proceeding decisions are cited herein.

PATENT
Attorney Docket No. 09685.0045-00000

IN THE UNITED STATES PATENT AND TRADEMARK OFFICE

In re Application of:	)	
	)	
Joshua HARTWELL	)	Group Art Unit: 2649
	)	
Application No.: 11/768,892	)	Examiner: Hsinchun Liao
	)	
Filed: June 26, 2007	)	
	)	
For: METHODS AND SYSTEMS FOR UPDATING IN-GAME CONTENT	)	Confirmation No.: 3817

Commissioner for Patents
P.O. Box 1450
Alexandria, Virginia 22313-1450

Dear Commissioner:

PETITION FOR EXTENSION OF TIME

Applicant petitions for a one-month extension of time to file an Appeal Brief in response to the Notice of Panel Decision from Pre-Appeal Brief Review mailed October 22, 2013. A fee of $200.00 is enclosed.

Please grant any additional extensions of time required to enter the attached Appeal Brief and charge any additional required fees to deposit account 06-0916.

Respectfully submitted,

FINNEGAN, HENDERSON, FARABOW,
GARRETT & DUNNER, L.L.P.

Dated: December 23, 2013

By: /Jeff T. Watson/
Jeff T. Watson
Reg. No. 70,587

Electronic Patent Application Fee Transmittal

Application Number:	11768892
Filing Date:	26-Jun-2007
Title of Invention:	Methods and Systems for Updating In-Game Content
First Named Inventor/Applicant Name:	Joshua Hartwell
Filer:	Jeff Taylor Watson
Attorney Docket Number:	09685.0045-00000

Filed as Large Entity

Utility under 35 USC 111(a) Filing Fees

Description	Fee Code	Quantity	Amount	Sub-Total in USD($)
Basic Filing:				
Pages:				
Claims:				
Miscellaneous-Filing:				
Petition:				
Patent-Appeals-and-Interference:				
Post-Allowance-and-Post-Issuance:				
Extension-of-Time:				
Extension - 1 month with $0 paid	1251	1	200	200

Description	Fee Code	Quantity	Amount	Sub-Total in USD($)
Miscellaneous:				
			Total in USD ($)	**200**

Electronic Acknowledgement Receipt

EFS ID:	17750182
Application Number:	11768892
International Application Number:	
Confirmation Number:	3817
Title of Invention:	Methods and Systems for Updating In-Game Content
First Named Inventor/Applicant Name:	Joshua Hartwell
Customer Number:	22852
Filer:	Jeff Taylor Watson
Filer Authorized By:	
Attorney Docket Number:	09685.0045-00000
Receipt Date:	23-DEC-2013
Filing Date:	26-JUN-2007
Time Stamp:	22:41:02
Application Type:	Utility under 35 USC 111(a)

Payment information:

Submitted with Payment	yes
Payment Type	Credit Card
Payment was successfully received in RAM	$200
RAM confirmation Number	9715
Deposit Account	
Authorized User	

File Listing:

Document Number	Document Description	File Name	File Size(Bytes)/ Message Digest	Multi Part /.zip	Pages (if appl.)

1	Appeal Brief Filed	Appeal.pdf	145778 e2f13d40f2343830bbeb6c93f43f69939ce9561d	no	24
Warnings:					
Information:					
2	Extension of Time	EOT.pdf	52923 e71d8fd0b1f4ea5e389d54be044cd96df10c6308	no	1
Warnings:					
Information:					
3	Fee Worksheet (SB06)	fee-info.pdf	29951 1417ee6f977e0918e68390dd1ab6b9dd1cf50677	no	2
Warnings:					
Information:					
		Total Files Size (in bytes):	228652		

This Acknowledgement Receipt evidences receipt on the noted date by the USPTO of the indicated documents, characterized by the applicant, and including page counts, where applicable. It serves as evidence of receipt similar to a Post Card, as described in MPEP 503.

New Applications Under 35 U.S.C. 111
If a new application is being filed and the application includes the necessary components for a filing date (see 37 CFR 1.53(b)-(d) and MPEP 506), a Filing Receipt (37 CFR 1.54) will be issued in due course and the date shown on this Acknowledgement Receipt will establish the filing date of the application.

National Stage of an International Application under 35 U.S.C. 371
If a timely submission to enter the national stage of an international application is compliant with the conditions of 35 U.S.C. 371 and other applicable requirements a Form PCT/DO/EO/903 indicating acceptance of the application as a national stage submission under 35 U.S.C. 371 will be issued in addition to the Filing Receipt, in due course.

New International Application Filed with the USPTO as a Receiving Office
If a new international application is being filed and the international application includes the necessary components for an international filing date (see PCT Article 11 and MPEP 1810), a Notification of the International Application Number and of the International Filing Date (Form PCT/RO/105) will be issued in due course, subject to prescriptions concerning national security, and the date shown on this Acknowledgement Receipt will establish the international filing date of the application.

UNITED STATES PATENT AND TRADEMARK OFFICE

UNITED STATES DEPARTMENT OF COMMERCE
United States Patent and Trademark Office
Address: COMMISSIONER FOR PATENTS
P.O. Box 1450
Alexandria, Virginia 22313-1450
www.uspto.gov

APPLICATION NO.	FILING DATE	FIRST NAMED INVENTOR	ATTORNEY DOCKET NO.	CONFIRMATION NO.
11/768,892	06/26/2007	Joshua Hartwell	09685.0045-00000	3817

22852 7590 10/22/2013
FINNEGAN, HENDERSON, FARABOW, GARRETT & DUNNER LLP
901 NEW YORK AVENUE, NW
WASHINGTON, DC 20001-4413

EXAMINER
LIAO, HSINCHUN

ART UNIT	PAPER NUMBER
2649	

MAIL DATE	DELIVERY MODE
10/22/2013	PAPER

Please find below and/or attached an Office communication concerning this application or proceeding.

The time period for reply, if any, is set in the attached communication.

Notice of Panel Decision from Pre-Appeal Brief Review	Application No. 11/768,892	Applicant(s) HARTWELL, JOSHUA
	Examiner EDWARD URBAN	Art Unit 2649

This is in response to the Pre-Appeal Brief Request for Review filed 05 September, 2013.

1. ☐ **Improper Request** – The Request is improper and a conference will not be held for the following reason(s):

☐ The Notice of Appeal has not been filed concurrent with the Pre-Appeal Brief Request.
☐ The request does not include reasons why a review is appropriate.
☐ A proposed amendment is included with the Pre-Appeal Brief request.
☐ Other: .

The time period for filing a response continues to run from the receipt date of the Notice of Appeal or from the mail date of the last Office communication, if no Notice of Appeal has been received.

2. ☒ **Proceed to Board of Patent Appeals and Interferences** – A Pre-Appeal Brief conference has been held. The application remains under appeal because there is at least one actual issue for appeal. Applicant is required to submit an appeal brief in accordance with 37 CFR 41.37. The time period for filing an appeal brief will be reset to be one month from mailing this decision, or the balance of the two-month time period running from the receipt of the notice of appeal, whichever is greater. Further, the time period for filing of the appeal brief is extendible under 37 CFR 1.136 based upon the mail date of this decision or the receipt date of the notice of appeal, as applicable.

☒ The panel has determined the status of the claim(s) is as follows:
Claim(s) allowed: _____.
Claim(s) objected to: _____.
Claim(s) rejected: *15-19 and 32-35*.
Claim(s) withdrawn from consideration: _____.

3. ☐ **Allowable application** – A conference has been held. The rejection is withdrawn and a Notice of Allowance will be mailed. Prosecution on the merits remains closed. No further action is required by applicant at this time.

4. ☐ **Reopen Prosecution** – A conference has been held. The rejection is withdrawn and a new Office action will be mailed. No further action is required by applicant at this time.

All participants:

(1) *EDWARD URBAN*.	(3) *Temesghen Ghebretinsae*.
(2) *Hsinchun Liao*.	(4)_____.

/Edward Urban/ Supervisory Patent Examiner, Art Unit 2649		/TEMESGHEN GHEBRETINSAE/ Supervisory Patent Examiner, Art Unit 2648

PATENT
Customer No. 22,852
Attorney Docket No. 09685.0045-00000

IN THE UNITED STATES PATENT AND TRADEMARK OFFICE

In re Application of:	)	
	)	
Joshua HARTWELL	)	Group Art Unit: 2649
	)	
Application No.: 11/768,892	)	Examiner: Hsinchun LIAO
	)	
Filed: June 26, 2007	)	
	)	
For: METHODS AND SYSTEMS FOR UPDATING IN-GAME CONTENT	)	Confirmation No.: 3817
	)	

Mail Stop AF
Commissioner for Patents
P.O. Box 1450
Alexandria, VA 22313-1450

Dear Commissioner:

PRE-APPEAL BRIEF REQUEST FOR REVIEW

Further to the Notice of Appeal and corresponding fee payment filed concurrently herewith, Applicant requests review, before the filing of an Appeal Brief, of the Final Office Action dated June 5, 2013, in the above-identified application. No amendments are being filed with this request. Review is requested for the reasons stated in the five-page attachment to this paper, entitled "Arguments for Consideration." The undersigned is an attorney of record.

Respectfully submitted,

FINNEGAN, HENDERSON, FARABOW,
GARRETT & DUNNER, L.L.P.

Dated: September 5, 2013

By: _____
Jeff T. Watson
Reg. No. 70,587

ARGUMENTS FOR CONSIDERATION

Applicant respectfully traverses the rejections in the Final Office Action of June 5, 2013 (the "Final Office Action"), and submits that the pending claims are allowable over the prior art of record for at least the following reasons.

I. The Section 102(b) rejection of claims 15-19, 32, 33, and 35 based on *Gatto* is improper and should be withdrawn.

Claims 15-19, 32, 33, and 35 are rejected under 35 U.S.C. § 102(b) as being anticipated by U.S. Patent Publication No. 2004/0127279 ("*Gatto*"). Applicant submits that *Gatto* does not anticipate any of the pending claims.

For example, independent claim 15 (the only pending independent claim) recites a method for providing updated video-game content to a mobile communication device for use in a mobile video game, comprising, among other things:

> receiving a request for the updated video-game content from the mobile communication device, the updated video-game content being usable in the video game that already exists on the mobile communication device;
>
> checking what updated video-game content to send based on one of the factors including a type of the mobile communication device, a telecom service associated with the mobile communication device, and a service provider of the telecom service; and
>
> uploading updated video-game content to the communications device, the video-game content being usable when the video game operates on the communications device.

Gatto fails to disclose at least the above subject matter of Applicant's claims, and therefore cannot anticipate the claims under § 102(b).

Gatto relates to "an email ticket that provides an email ticket recipient an opportunity to win a prize . . . ." *Gatto* at ¶ [0010]. According to *Gatto*, the email ticket comprises a secret layer and a promotional layer. *Id.* The secret layer may be configured to be "initially hidden from view and gradually revealed following a predetermined action by the email recipient," such as a "twirling action of a pointing device." *See id.* at ¶¶ [0010], [0015]. The promotional layer

may be configured to "initially obscure the secret layer and to progressively reveal at least a portion of the secret layer following the predetermined action by the email recipient." *Id.* at ¶ [0010]. Moreover, the promotional layer may include a hyperlink, which "may be an Internet hyperlink configured to enable the email recipient to download and install software." *Id.* at ¶ [0013]. *Gatto* also discloses that the hyperlink may be used "to download promotional items, or to learn about the company, obtain news or shop at an online store, for example." *Id.* at ¶ [0051].

A. *Gatto* does not disclose a "video game."

The Final Office Action appears to assert that *Gatto*'s disclosure of "hyperlinks to download promotional items" corresponds to "a request for the updated video-game content," and that the promotional items returned in response to a user clicking on a hyperlink in an email are "updated video-game content." *See* Final Office Action at 3. But the email ticket described in *Gatto* is not a "video game," as required by Applicant's claims. The Final Office Action cites to paragraph [0008] of *Gatto* in apparent support for the Examiner's assertion that an "email ticket" is a "video game." *See* Final Office Action at 3. But that paragraph merely characterizes the "present invention" of *Gatto* as offering "another dimension in the Internet gaming." *See Gatto* at ¶ [0008]. Internet gaming does not necessarily mean a "video game." Internet gaming, like gambling or the lottery, involves a simple game of chance in order to win prizes or money. *See id.* at Abstract; Fig. 1. A person of ordinary skill would not understand *Gatto*'s "gaming" disclosure to refer to the claimed **video game**. An exemplary video game—a darts game—is described in paragraphs [0045] to [0049] and shown in Figs. 2A-2B of the present application, and is substantively different from *Gatto*'s "email ticket" in functionality, usability, and basic premise. Video games involve more detailed game play and strategy—and, importantly, do not involve winning money or a physical prize. As "Internet gaming" is not a "video game," *Gatto* is not at all related to the core intended use of the present claims and therefore cannot anticipate.

B. *Gatto* does not disclose updating a video game, or the use of updated content in a video game.

Moreover, *Gatto* fails to disclose that the "promotional items" downloaded in response to a user clicking on a hyperlink included in an email ticket are "updated video-game content . . . usable in the video game that already exists on the mobile communication device" or "usable when the video game operates on the communications device," as recited in Applicant's independent claim 15. As discussed above, the Final Office Action appears to contend that an email ticket, which may include hyperlinks for promotional items, is the "video game" recited in Applicant's claim 15. *See* Final Office Action at 2-4. Nothing in *Gatto* discloses that these "promotional items" "**update**" the email ticket when downloaded; in fact, it appears that the email ticket is not updated once it is sent to a user to "play." A "hyperlink" is not updated content for the email ticket, but instead causes the download of an entirely separate program or Internet page. *See Gatto* at ¶ [0011]. Thus, *Gatto* also fails to disclose that any updated "promotional items" or content that would be "**usable in"** the email ticket or a "video game" itself, as opposed to a separate application program. As *Gatto* does not teach these claim elements, it cannot anticipate.

C. *Gatto* does not disclose checking what content to send based upon a listed factor.

Independent claim 15 also recites "checking what updated video-game content to send based on one of the factors including a type of the mobile communication device, a telecom service associated with the mobile communication device, and a service provider of the telecom service." As cited by the Examiner, *Gatto* states that the scratching effects included in the original email ticket sent to a user may be "based on multidimensional objects that can be rendered on the email recipient's computer and/or other computing device." *See Gatto* at ¶ [0050]. This relates merely to providing a method of activating the email ticket that is capable of being performed on the user's device. Nothing in *Gatto* discloses checking what content to

send the user's device "based on one of the factors including a type of the mobile communication device, a telecom service associated with the mobile communication device, and a service provider of the telecom service," as recited in claim 15.

D. The Section 102(b) rejection cannot properly rely upon multiple references.

In response to Applicant's previous arguments regarding the deficiencies of *Gatto* with respect to the subject matter of Applicant's claims, the Final Office Action states: "Additionally, Willis (US 20060136297) also discloses updating promotional content in a video game (Willis paragraph 0014)." Final Office Action at 2. Applicant submits that it is improper for a rejection under 35 U.S.C. § 102(b) to rely on more than one reference. *See* M.P.E.P. § 2131. Therefore, to the extent the anticipation rejection relies upon *Gatto* in conjunction with *Willis*, it is per se improper and must be withdrawn.

II. The Section 103(a) rejection of dependent claim 34 based on *Gatto* and *Willis* is improper and should be withdrawn.

In the Final Office Action, dependent claim 34 was rejected under 35 U.S.C. § 103(a) as being obvious over *Gatto* and *Willis*. Final Office Action at 5. Claim 34 depends from independent claim 15. Thus, claim 34 is patently distinguishable from *Gatto* for at least the reasons outlined above. Further, *Willis* fails to cure the deficiencies of *Gatto* that are discussed above. For example, *Willis* discloses receiving advertising content from an advertising content server relevant to "the current geographical location of the mobile video game platform" (*see Willis* at ¶ [0014]), but fails to disclose that this advertising content may be specifically "based on one of the factors including a type of the mobile communication device, a telecom service associated with the mobile communication device, and a service provider of the telecom service," as recited in Applicant's independent claim 15. Therefore, Applicant respectfully requests withdrawal of the rejection under 35 U.S.C. § 103(a) of dependent claim 34 based on *Gatto* and *Willis*.

III. Conclusion

Accordingly, for at least the above reasons, the Final Office Action has not established that *Gatto* independently discloses or teaches all of the features of independent claim 15, nor has the Final Office Action articulated why claim 34 would have been obvious to one of ordinary skill in the art. Accordingly, Applicant respectfully submits that the rejections of claims 15-19 and 32-35 should be withdrawn and these claims passed to immediate allowance.

If the Panel is not inclined to allow the application at this time, at a minimum prosecution should be reopened such that Applicant should not need to proceed to the Board with an improper, multiple reference anticipation rejection in which the cited art plainly does not disclose each of the claimed elements.

Please grant any extensions of time required to enter this response and charge any additional required fees to Deposit Account 06-0916.

Electronic Patent Application Fee Transmittal

Application Number:	11768892
Filing Date:	26-Jun-2007
Title of Invention:	Methods and Systems for Updating In-Game Content
First Named Inventor/Applicant Name:	Joshua Hartwell
Filer:	Jeff Taylor Watson/Gwendolyn Ramsey
Attorney Docket Number:	09685.0045-00000

Filed as Large Entity

Utility under 35 USC 111(a) Filing Fees

Description	Fee Code	Quantity	Amount	Sub-Total in USD($)
Basic Filing:				
Pages:				
Claims:				
Miscellaneous-Filing:				
Petition:				
Patent-Appeals-and-Interference:				
Notice of Appeal	1401	1	800	800
Post-Allowance-and-Post-Issuance:				
Extension-of-Time:				

Description	Fee Code	Quantity	Amount	Sub-Total in USD($)
Miscellaneous:				
			Total in USD ($)	**800**

Electronic Acknowledgement Receipt

EFS ID:	16776189
Application Number:	11768892
International Application Number:	
Confirmation Number:	3817
Title of Invention:	Methods and Systems for Updating In-Game Content
First Named Inventor/Applicant Name:	Joshua Hartwell
Customer Number:	22852
Filer:	Jeff Taylor Watson/Gwendolyn Ramsey
Filer Authorized By:	Jeff Taylor Watson
Attorney Docket Number:	09685.0045-00000
Receipt Date:	05-SEP-2013
Filing Date:	26-JUN-2007
Time Stamp:	17:24:50
Application Type:	Utility under 35 USC 111(a)

Payment information:

Submitted with Payment	yes
Payment Type	Credit Card
Payment was successfully received in RAM	$800
RAM confirmation Number	4801
Deposit Account	
Authorized User	

File Listing:

Document Number	Document Description	File Name	File Size(Bytes)/ Message Digest	Multi Part /.zip	Pages (if appl.)

1		09685_0045_NOA_PABR.pdf	372450 a983e7165b343c9e0e20c29a9eb635c655a0544b	yes	7
	Multipart Description/PDF files in .zip description				
	Document Description		**Start**	**End**	
	Notice of Appeal Filed		1	1	
	Pre-Brief Conference request		2	7	
Warnings:					
Information:					
2	Fee Worksheet (SB06)	fee-info.pdf	30190 ca1813cb6e469d59081af295df6914774a03df22	no	2
Warnings:					
Information:					
		Total Files Size (in bytes):	402640		

This Acknowledgement Receipt evidences receipt on the noted date by the USPTO of the indicated documents, characterized by the applicant, and including page counts, where applicable. It serves as evidence of receipt similar to a Post Card, as described in MPEP 503.

<u>New Applications Under 35 U.S.C. 111</u>
If a new application is being filed and the application includes the necessary components for a filing date (see 37 CFR 1.53(b)-(d) and MPEP 506), a Filing Receipt (37 CFR 1.54) will be issued in due course and the date shown on this Acknowledgement Receipt will establish the filing date of the application.

<u>National Stage of an International Application under 35 U.S.C. 371</u>
If a timely submission to enter the national stage of an international application is compliant with the conditions of 35 U.S.C. 371 and other applicable requirements a Form PCT/DO/EO/903 indicating acceptance of the application as a national stage submission under 35 U.S.C. 371 will be issued in addition to the Filing Receipt, in due course.

<u>New International Application Filed with the USPTO as a Receiving Office</u>
If a new international application is being filed and the international application includes the necessary components for an international filing date (see PCT Article 11 and MPEP 1810), a Notification of the International Application Number and of the International Filing Date (Form PCT/RO/105) will be issued in due course, subject to prescriptions concerning national security, and the date shown on this Acknowledgement Receipt will establish the international filing date of the application.

PATENT
Customer No. 22,852
Attorney Docket No. 09685.0045-00000

IN THE UNITED STATES PATENT AND TRADEMARK OFFICE

In re Application of:	)	
	)	
Joshua HARTWELL	)	Group Art Unit: 2649
	)	
Application No.: 11/768,892	)	Examiner: Hsinchun LIAO
	)	
Filed: June 26, 2007	)	
	)	
For: METHODS AND SYSTEMS FOR UPDATING IN-GAME CONTENT	)	Confirmation No.: 3817

Mail Stop AF
Commissioner for Patents
P.O. Box 1450
Alexandria, VA 22313-1450

NOTICE OF APPEAL UNDER 37 C.F.R. § 41.31

Dear Commissioner:

Applicant appeals to the Patent Trial and Appeal Board from the Examiner's Final Office Action mailed June 5, 2013.

The items below are appropriate:

1. The Notice of Appeal Fee of $800.00 is enclosed.

2. A pre-appeal brief conference is requested. The request and supporting documentation are attached.

Please grant any extensions of time required to enter this response and charge any additional required fees to Deposit Account 06-0916.

Respectfully submitted,

FINNEGAN, HENDERSON, FARABOW,
GARRETT & DUNNER, L.L.P.

Dated: September 5, 2013

By: _____
Jeff T. Watson
Reg. No. 70,587

UNITED STATES PATENT AND TRADEMARK OFFICE

UNITED STATES DEPARTMENT OF COMMERCE
United States Patent and Trademark Office
Address: COMMISSIONER FOR PATENTS
P.O. Box 1450
Alexandria, Virginia 22313-1450
www.uspto.gov

APPLICATION NO.	FILING DATE	FIRST NAMED INVENTOR	ATTORNEY DOCKET NO.	CONFIRMATION NO.
11/768,892	06/26/2007	Joshua Hartwell	09685.0045-00000	3817

22852 7590 06/05/2013
FINNEGAN, HENDERSON, FARABOW, GARRETT & DUNNER LLP
901 NEW YORK AVENUE, NW
WASHINGTON, DC 20001-4413

EXAMINER
LIAO, HSINCHUN

ART UNIT	PAPER NUMBER
2649	

MAIL DATE	DELIVERY MODE
06/05/2013	PAPER

Please find below and/or attached an Office communication concerning this application or proceeding.

The time period for reply, if any, is set in the attached communication.

Office Action Summary	Application No.	Applicant(s)	
	11/768,892	HARTWELL, JOSHUA	
	Examiner	Art Unit	
	HSIN-CHUN LIAO	2649	

-- The MAILING DATE of this communication appears on the cover sheet with the correspondence address --

Period for Reply

A SHORTENED STATUTORY PERIOD FOR REPLY IS SET TO EXPIRE 3 MONTH(S) OR THIRTY (30) DAYS, WHICHEVER IS LONGER, FROM THE MAILING DATE OF THIS COMMUNICATION.

- Extensions of time may be available under the provisions of 37 CFR 1.136(a). In no event, however, may a reply be timely filed after SIX (6) MONTHS from the mailing date of this communication.
- If NO period for reply is specified above, the maximum statutory period will apply and will expire SIX (6) MONTHS from the mailing date of this communication.
- Failure to reply within the set or extended period for reply will, by statute, cause the application to become ABANDONED (35 U.S.C. § 133). Any reply received by the Office later than three months after the mailing date of this communication, even if timely filed, may reduce any earned patent term adjustment. See 37 CFR 1.704(b).

Status

1)☒ Responsive to communication(s) filed on *04 April 2013*.

2a)☒ This action is **FINAL**. 2b)☒ This action is non-final.

3)☐ Since this application is in condition for allowance except for formal matters, prosecution as to the merits is closed in accordance with the practice under *Ex parte Quayle*, 1935 C.D. 11, 453 O.G. 213.

Disposition of Claims

4)☒ Claim(s) *15-19 and 32-35* is/are pending in the application.

4a) Of the above claim(s) _____ is/are withdrawn from consideration.

5)☐ Claim(s) _____ is/are allowed.

6)☒ Claim(s) *15-19 and 32-35* is/are rejected.

7)☐ Claim(s) _____ is/are objected to.

8)☐ Claim(s) _____ are subject to restriction and/or election requirement.

Application Papers

9)☐ The specification is objected to by the Examiner.

10)☐ The drawing(s) filed on _____ is/are: a)☐ accepted or b)☐ objected to by the Examiner.

Applicant may not request that any objection to the drawing(s) be held in abeyance. See 37 CFR 1.85(a).

Replacement drawing sheet(s) including the correction is required if the drawing(s) is objected to. See 37 CFR 1.121(d).

11)☐ The oath or declaration is objected to by the Examiner. Note the attached Office Action or form PTO-152.

Priority under 35 U.S.C. § 119

12)☐ Acknowledgment is made of a claim for foreign priority under 35 U.S.C. § 119(a)-(d) or (f).

a)☐ All b)☐ Some * c)☐ None of:

1.☐ Certified copies of the priority documents have been received.

2.☐ Certified copies of the priority documents have been received in Application No. _____.

3.☐ Copies of the certified copies of the priority documents have been received in this National Stage application from the International Bureau (PCT Rule 17.2(a)).

* See the attached detailed Office action for a list of the certified copies not received.

Attachment(s)

1) ☐ Notice of References Cited (PTO-892)

2) ☐ Notice of Draftsperson's Patent Drawing Review (PTO-948)

3) ☐ Information Disclosure Statement(s) (PTO/SB/08) Paper No(s)/Mail Date _____.

4) ☐ Interview Summary (PTO-413) Paper No(s)/Mail Date. _____ .

5) ☐ Notice of Informal Patent Application

6) ☐ Other: _____.

DETAILED ACTION

Response to Arguments

1. Applicant's arguments with respect to claim 34 have been considered but are moot because the arguments do not apply to any of the references being used in the current rejection.

Willis (US 20060136297) is added to teach the limitation of "the video-game content is selected based on the location of the mobile communication device."

1. Applicant's arguments filed 04/04/2013 have been fully considered but they are not persuasive.

In pages 4-6 of the remarks, applicant argues that Gatto's "hyperlinks to download promotional items" are, in fact, not usable in the so-called video game. The examiner respectfully disagrees. Gatto discloses hyperlinks to **download** promotional items, or to learn about the company, obtain news or shop at online (Gatto paragraph 0051). Therefore Gatto's promotional items are **useable** in a video game (Gatto paragraph 0008 see "internet gaming" and "player"). Applicant also admits in the specification that applicant's video game also updates **promotional** content by **downloading** from a server (Specification paragraph 0008, 0009 and 0016. see also Fig. 2B Item 225 and paragraph 0032 about third party advertisers). Therefore, applicant's "**video-game content**" reads on Gatto's promotional items. Additionally, Willis (US 20060136297) also discloses updating promotional content in a video game (Willis paragraph 0014).

Claim Rejections - 35 USC § 102

1. The following is a quotation of the appropriate paragraphs of 35 U.S.C. 102 that form the basis for the rejections under this section made in this Office action:

> A person shall be entitled to a patent unless –
>
> (b) the invention was patented or described in a printed publication in this or a foreign country or in public use or on sale in this country, more than one year prior to the date of application for patent in the United States.

2. Claims 15-19 are rejected under 35 U.S.C. 102(b) as being anticipated by Gatto (US 20040127279).

In regards to claim 15, Gatto discloses a method for providing updated video-game content to a mobile communication device (Gatto paragraph 0048) for use in a mobile video game (Gatto paragraph 0008 “internet gaming”), the method comprising the steps of:

receiving a request for the updated video-game content from the mobile communication device, the updated video-game content (Gatto paragraph 0051 note: this reads on “hyperlinks to download promotional items”) being usable in the video-game that already exists on the mobile communication device;

checking what updated video-game content to send based on one of the factors including a type of the mobile communication device (Gatto paragraph 0050 note: graphics is based on types of "mobile devices” e.g. phone or laptop computer), a telecom service associated with the mobile communication device, and a service provider of the telecom service; and

uploading updated video-game content to the communications device (Gatto Fig. 16 paragraph 0051 note: players download content. therefore, the server 1604 upload

content to the players 1606), the video-game content being usable (Gatto paragraph 0051) when the video game operates on the communications device.

In regards to claim 16, Gatto discloses a method for providing updated content to a mobile communication device as described above. Gatto further discloses the updated video-game content is promotional content (Gatto paragraph 0051 note: this reads on “promotional items”).

In regards to claim 17, Gatto discloses a method for providing updated content to a mobile communication device as described above. Gatto further discloses comprising the step of checking (Gatto paragraph 0009, 0050 note: this reads on “a secure distribution...a secure validation”) whether the communications device should receive the updated video-game content before uploading the updated video-game content to the communications device.

In regards to claim 18, Gatto discloses a method for providing updated content to a mobile communication device as described above. Gatto further discloses the step of sending information to the mobile communication device as part of the updated content, the information providing an in-game placement location (Gatto paragraph 0051 note: this reads on “image”. an image requires pixel e.g. x, y locations) associated with the updated video-game content.

In regards to claim 19, Gatto discloses a method for providing updated content to a mobile communication device as described above. Gatto further discloses the step of tracking (Gatto paragraph 0016, 0019 note: this reads on progressively reveal/replace

i.e. “secret layer” is tracked) what has been uploaded to the mobile communication device.

In regards to claim 32, Gatto discloses a method for providing updated content to a mobile communication device as described above. Gatto further discloses uploading updated video-game content to the mobile communication device further comprises displaying the video- game content within the game at a location (Gatto paragraph 0010 note: this reads on “displayed at a predetermined location”) based on user interaction.

In regards to claim 33, Gatto discloses a method for providing updated content to a mobile communication device as described above. Gatto further discloses the video-game content is displayed in the video game for a predetermined period of time (Gatto paragraph 0008 note: this reads on “predetermined time-out).

In regards to claim 35, Gatto discloses a method for providing updated content to a mobile communication device as described above. Gatto further discloses the video-game content is selected based on user information specific to a user of the mobile communication device (Gatto paragraph 0008 note: email is specific to a user).

Claim Rejections - 35 USC § 103

2. The following is a quotation of 35 U.S.C. 103(a) which forms the basis for all obviousness rejections set forth in this Office action:

> (a) A patent may not be obtained though the invention is not identically disclosed or described as set forth in section 102 of this title, if the differences between the subject matter sought to be patented and the prior art are such that the subject matter as a whole would have been obvious at the time the invention was made to a person having ordinary skill in the art to which said subject matter pertains. Patentability shall not be negatived by the manner in which the invention was made.

3. Claim 34 is rejected under 35 U.S.C. 103(a) as being unpatentable over Gatto is view of Willis (US 20060136297).

In regards to claim 34, Gatto discloses a method for providing updated content to a mobile communication device as described above. Gatto fails to teach the video-game content is selected based on the location of the mobile communication device. However, Willis discloses video-game content is selected based on the location of the mobile communication device (Willis paragraph 0014). It would have been obvious to a person of ordinary skill in the art at the time of invention to use Willis' content in Gatto's method for providing geographic location based services to video gamers (Willis paragraph 0010).

Conclusion

4. Applicant's amendment necessitated the new ground(s) of rejection presented in this Office action. Accordingly, **THIS ACTION IS MADE FINAL**. See MPEP § 706.07(a). Applicant is reminded of the extension of time policy as set forth in 37 CFR 1.136(a).

A shortened statutory period for reply to this final action is set to expire THREE MONTHS from the mailing date of this action. In the event a first reply is filed within TWO MONTHS of the mailing date of this final action and the advisory action is not mailed until after the end of the THREE-MONTH shortened statutory period, then the shortened statutory period will expire on the date the advisory action is mailed, and any extension fee pursuant to 37 CFR 1.136(a) will be calculated from the mailing date of the advisory action. In no event, however, will the statutory period for reply expire later than SIX MONTHS from the date of this final action.

Any inquiry concerning this communication or earlier communications from the examiner should be directed to HSIN-CHUN LIAO whose telephone number is (571)270-7701. The examiner can normally be reached on Monday - Thursday, 8:00AM-4:00PM.

If attempts to reach the examiner by telephone are unsuccessful, the examiner's supervisor, Edward Urban can be reached on (571)272-7899. The fax phone number for the organization where this application or proceeding is assigned is 571-273-8300.

Information regarding the status of an application may be obtained from the Patent Application Information Retrieval (PAIR) system. Status information for published applications may be obtained from either Private PAIR or Public PAIR. Status information for unpublished applications is available through Private PAIR only. For more information about the PAIR system, see http://pair-direct.uspto.gov. Should you have questions on access to the Private PAIR system, contact the Electronic Business Center (EBC) at 866-217-9197 (toll-free). If you would like assistance from a USPTO Customer Service Representative or access to the automated information system, call 800-786-9199 (IN USA OR CANADA) or 571-272-1000.

/HSIN-CHUN LIAO/
Examiner, Art Unit 2649

/Edward Urban/

Supervisory Patent Examiner, Art Unit 2649

Index of Claims	Application/Control No.	Applicant(s)/Patent Under Reexamination
	11768892	HARTWELL, JOSHUA
	Examiner	**Art Unit**
	HSIN-CHUN LIAO	2618

✓	Rejected	-	Cancelled	N	Non-Elected	A	Appeal
=	Allowed	÷	Restricted	I	Interference	O	Objected

☐ Claims renumbered in the same order as presented by applicant ☐ CPA ☐ T.D. ☐ R.1.47

CLAIM		DATE								
Final	Original	05/02/2012	09/03/2012	12/31/2012	05/30/2013					
	1	÷	✓	-	-					
	2	÷	✓	-	-					
	3	÷	✓	-	-					
	4	÷	✓	-	-					
	5	÷	✓	-	-					
	6	÷	✓	-	-					
	7	÷	✓	-	-					
	8	÷	✓	-	-					
	9	÷	✓	-	-					
	10	÷	✓	-	-					
	11	÷	✓	-	-					
	12	÷	✓	-	-					
	13	÷	✓	-	-					
	14	÷	✓	-	-					
	15	÷	-	✓	✓					
	16	÷	-	✓	✓					
	17	÷	-	✓	✓					
	18	÷	-	✓	✓					
	19	÷	-	✓	✓					
	20	÷	-	-	-					
	21	÷	-	-	-					
	22	÷	-	-	-					
	23	÷	-	-	-					
	24	÷	-	-	-					
	25	÷	-	-	-					
	26	÷	-	-	-					
	27	÷	-	-	-					
	28	÷	-	-	-					
	29	÷	-	-	-					
	30	÷	-	-	-					
	31	÷	-	-	-					
	32				✓					
	33				✓					
	34				✓					
	35				✓					

PATENT
Attorney Docket No. 09685.0045-00000

IN THE UNITED STATES PATENT AND TRADEMARK OFFICE

In re Application of:	)	
	)	
Joshua HARTWELL	)	Group Art Unit: 2649
	)	
Application No.: 11/768,892	)	Examiner: Hsinchun Liao
	)	
Filed: June 26, 2007	)	
	)	
For: METHODS AND SYSTEMS FOR UPDATING IN-GAME CONTENT	)	Confirmation No.: 3817

Commissioner for Patents
P.O. Box 1450
Alexandria, VA 22313-1450

Commissioner:

REPLY TO OFFICE ACTION

In reply to the Office Action mailed January 4, 2013, please amend the above-identified application as follows:

Amendments to the Claims are reflected in the listing of claims in this paper.

Remarks follow the amendments section of this paper.

PATENT
Attorney Docket No. 09685.0045-00000

IN THE UNITED STATES PATENT AND TRADEMARK OFFICE

In re Application of:	)	
	)	
Joshua HARTWELL	)	Group Art Unit: 2649
	)	
Application No.: 11/768,892	)	Examiner: Hsinchun Liao
	)	
Filed: June 26, 2007	)	
	)	
For: METHODS AND SYSTEMS FOR UPDATING IN-GAME CONTENT	)	Confirmation No.: 3817

Commissioner for Patents
P.O. Box 1450
Alexandria, VA 22313-1450

Commissioner:

REPLY TO OFFICE ACTION

In reply to the Office Action mailed January 4, 2013, please amend the above-identified application as follows:

Amendments to the Claims are reflected in the listing of claims in this paper.

Remarks follow the amendments section of this paper.

AMENDMENTS TO THE CLAIMS:

This listing of claims will replace all prior versions and listings of claims in the application:

1-14. (Canceled).

15. (Currently Amended) A method for providing updated video-game content to a mobile communication device for use in a mobile video game, the method comprising the steps of:

receiving a request for the updated video-game content from the mobile communication device, the updated video-game content being usable in the video**[[-]]** game that already exists on the mobile communication device;

checking what updated video-game content to send based on one of the factors including a type of the mobile communication device, a telecom service associated with the mobile communication device, and a service provider of the telecom service; and

uploading updated video-game content to the communications device, the video-game content being usable when the video game operates on the communications device.

16. (Currently Amended) The method of claim 15, wherein the updated video-game content is promotional content.

17. (Currently Amended) The method of claim 15, further comprising the step of checking whether the communications device should receive the updated video-game content before uploading the updated video-game content to the communications device.

18. (Currently Amended) The method of claim 15, further comprising the step of sending information to the mobile communication device as part of the updated content, the information providing an in-game placement location associated with the updated video-game content.

19. (Original) The method of claim 15, further comprising the step of tracking what has been uploaded to the mobile communication device.

20-31. (Canceled).

32. (New) The method of claim 15, wherein uploading updated video-game content to the mobile communication device further comprises displaying the video-game content within the game at a location based on user interaction.

33. (New) The method of claim 15, wherein the video-game content is displayed in the video game for a predetermined period of time.

34. (New) The method of claim 15, wherein the video-game content is selected based on the location of the mobile communication device.

35. (New) The method of claim 15, wherein the video-game content is selected based on user information specific to a user of the mobile communication device.

REMARKS

Claims 1-31 are pending in this application, of which claims 15-19 are presented for prosecution, claim 15 being independent. In the Office Action dated January 4, 2013 ("Office Action"), the Examiner rejected claims 15-19 under 35 U.S.C. § 102(b) as being anticipated by U.S. Patent Publication No. 2004/0127279 ("*Gatto*").

Applicant thanks the Examiner for the telephone call of March 26, 2013, where Applicant reiterated that *Gatto* does not disclose the elements of the claims relating to "content," and that *Gatto* is not relevant video-game content at all. The Examiner maintained his position as set forth in the Office Action. With this response, Applicant amends claims 15-18 and traverses the pending rejection. Claims 15-19 remain under prosecution.

Applicant respectfully submits that the Examiner continues to maintain an overly broad interpretation of the word "content" and stretches the disclosure of *Gatto* to support the Section 102 rejection of the claims. For example, the Examiner relies heavily on paragraph [0051] of *Gatto*, which discloses an "embodiment of an email ticket." *See* Office Action at 3-4; *Gatto* ¶ [0051]. In the disclosed email ticket, the player is "invited to virtually 'twist' the bottle cap off to download some file." *Gatto* ¶ [0051]. In another embodiment, the player is "invited to click on and twirl" the promotional layer, "with accompanying animation and sound effects." *Id.* The email may also contain "hyperlinks" that allow the user to "download promotional items, or to learn about the company, obtain news or shop at an online store, for example." *Id.*

As confirmed via telephone, the Examiner asserts that the email of *Gatto* is a video game. The Examiner also asserts that the "promotional items" available for

download via email hyperlink is "content" that is "usable in the video game." *See* Office Action at 3. Finally, the Examiner clarified via telephone that he considers the "animations" of the email to be content usable in the video game.

As an initial matter, Applicant disagrees that the email disclosed by *Gatto* is a video game. In addition, Applicant notes that the "promotional items" identified by the Examiner are merely items available for download via hyperlink in the email. There is no indication that these promotional items are "usable in the video game." Indeed, it would not make sense for an email to provide hyperlinks for content that is usable in the email itself.

Regarding the "animations" relied on by the Examiner, even if those animations were considered "content," *Gatto* would still fall short of disclosing the claimed subject matter. For example, *Gatto* does not disclose that this so-called content is "updated," or that the program "check[s] what updated content to send based on one of the factors including a type of the mobile communication device, a telecom service associated with the mobile communication device, and a service provider of the telecom service." Rather, *Gatto* merely discloses an email that has a "promotional layer" with "accompanying animation" and "sound effects." The Examiner's assertion that *Gatto* discloses choosing a graphic type based on the type of mobile device is insufficient—independent claim 15 recites "checking what updated content to send," rather than which display program a graphical animation should use.

Applicant respectfully submits that the Examiner has not carefully considered all of the language presented in the claims, instead choosing to focus on a few phrases in the claims and then compare those phrases to an unrelated disclosure in *Gatto*. For

example, the Examiner asserts that *Gatto* discloses "receiving a request for the updated content from the mobile communication device," pointing to the "hyperlinks to download promotional items." Office Action at 3. But the Examiner fails to address the remaining claim language of this element—namely, whether this content is "usable in the video game that already exists on the mobile communication device." A close reading of *Gatto* reveals that the "hyperlinks to download promotional items" are, in fact, not usable in the so-called video game. The Examiner cannot support a Section 102 rejection while entirely skipping over particular elements of the claims.

CONCLUSION

In view of the foregoing amendments and remarks, Applicant respectfully requests reconsideration and reexamination of this application and the timely allowance of claims 15-19.

Because Applicant's remarks with respect to the Examiner's rejections are sufficient to overcome these rejections, Applicant's silence as to assertions by the Examiner in the Office Action or certain requirements that may be applicable to such rejections (e.g., whether a reference constitutes prior art, ability to combine references, assertions as to patentability of dependent claims) is not a concession by Applicant that such assertions are accurate or such requirements have been met, and Applicant reserves the right to analyze and dispute such in the future.

Please grant any extensions of time required to enter this response and charge any additional required fees to Deposit Account 06-0916.

Respectfully submitted,

FINNEGAN, HENDERSON, FARABOW,
GARRETT & DUNNER, L.L.P.

Dated: April 4, 2013

By:_____

Armon Shahdadi
Reg. No. 70,728
(404) 653-6455

AMENDMENTS TO THE CLAIMS:

This listing of claims will replace all prior versions and listings of claims in the application:

1-14. (Canceled).

15. (Currently Amended) A method for providing updated video-game content to a mobile communication device for use in a mobile video game, the method comprising the steps of:

receiving a request for the updated video-game content from the mobile communication device, the updated video-game content being usable in the video**[[-]]** game that already exists on the mobile communication device;

checking what updated video-game content to send based on one of the factors including a type of the mobile communication device, a telecom service associated with the mobile communication device, and a service provider of the telecom service; and

uploading updated video-game content to the communications device, the video-game content being usable when the video game operates on the communications device.

16. (Currently Amended) The method of claim 15, wherein the updated video-game content is promotional content.

17. (Currently Amended) The method of claim 15, further comprising the step of checking whether the communications device should receive the updated video-game content before uploading the updated video-game content to the communications device.

18. (Currently Amended) The method of claim 15, further comprising the step of sending information to the mobile communication device as part of the updated content, the information providing an in-game placement location associated with the updated video-game content.

19. (Original) The method of claim 15, further comprising the step of tracking what has been uploaded to the mobile communication device.

20-31. (Canceled).

32. (New) The method of claim 15, wherein uploading updated video-game content to the mobile communication device further comprises displaying the video-game content within the game at a location based on user interaction.

33. (New) The method of claim 15, wherein the video-game content is displayed in the video game for a predetermined period of time.

34. (New) The method of claim 15, wherein the video-game content is selected based on the location of the mobile communication device.

35. (New) The method of claim 15, wherein the video-game content is selected based on user information specific to a user of the mobile communication device.

REMARKS

Claims 1-31 are pending in this application, of which claims 15-19 are presented for prosecution, claim 15 being independent. In the Office Action dated January 4, 2013 ("Office Action"), the Examiner rejected claims 15-19 under 35 U.S.C. § 102(b) as being anticipated by U.S. Patent Publication No. 2004/0127279 ("*Gatto*").

Applicant thanks the Examiner for the telephone call of March 26, 2013, where Applicant reiterated that *Gatto* does not disclose the elements of the claims relating to "content," and that *Gatto* is not relevant video-game content at all. The Examiner maintained his position as set forth in the Office Action. With this response, Applicant amends claims 15-18 and traverses the pending rejection. Claims 15-19 remain under prosecution.

Applicant respectfully submits that the Examiner continues to maintain an overly broad interpretation of the word "content" and stretches the disclosure of *Gatto* to support the Section 102 rejection of the claims. For example, the Examiner relies heavily on paragraph [0051] of *Gatto*, which discloses an "embodiment of an email ticket." *See* Office Action at 3-4; *Gatto* ¶ [0051]. In the disclosed email ticket, the player is "invited to virtually 'twist' the bottle cap off to download some file." *Gatto* ¶ [0051]. In another embodiment, the player is "invited to click on and twirl" the promotional layer, "with accompanying animation and sound effects." *Id.* The email may also contain "hyperlinks" that allow the user to "download promotional items, or to learn about the company, obtain news or shop at an online store, for example." *Id.*

As confirmed via telephone, the Examiner asserts that the email of *Gatto* is a video game. The Examiner also asserts that the "promotional items" available for

download via email hyperlink is "content" that is "usable in the video game." *See* Office Action at 3. Finally, the Examiner clarified via telephone that he considers the "animations" of the email to be content usable in the video game.

As an initial matter, Applicant disagrees that the email disclosed by *Gatto* is a video game. In addition, Applicant notes that the "promotional items" identified by the Examiner are merely items available for download via hyperlink in the email. There is no indication that these promotional items are "usable in the video game." Indeed, it would not make sense for an email to provide hyperlinks for content that is usable in the email itself.

Regarding the "animations" relied on by the Examiner, even if those animations were considered "content," *Gatto* would still fall short of disclosing the claimed subject matter. For example, *Gatto* does not disclose that this so-called content is "updated," or that the program "check[s] what updated content to send based on one of the factors including a type of the mobile communication device, a telecom service associated with the mobile communication device, and a service provider of the telecom service." Rather, *Gatto* merely discloses an email that has a "promotional layer" with "accompanying animation" and "sound effects." The Examiner's assertion that *Gatto* discloses choosing a graphic type based on the type of mobile device is insufficient—independent claim 15 recites "checking what updated content to send," rather than which display program a graphical animation should use.

Applicant respectfully submits that the Examiner has not carefully considered all of the language presented in the claims, instead choosing to focus on a few phrases in the claims and then compare those phrases to an unrelated disclosure in *Gatto*. For

example, the Examiner asserts that *Gatto* discloses "receiving a request for the updated content from the mobile communication device," pointing to the "hyperlinks to download promotional items." Office Action at 3. But the Examiner fails to address the remaining claim language of this element—namely, whether this content is "usable in the video game that already exists on the mobile communication device." A close reading of *Gatto* reveals that the "hyperlinks to download promotional items" are, in fact, not usable in the so-called video game. The Examiner cannot support a Section 102 rejection while entirely skipping over particular elements of the claims.

CONCLUSION

In view of the foregoing amendments and remarks, Applicant respectfully requests reconsideration and reexamination of this application and the timely allowance of claims 15-19.

Because Applicant's remarks with respect to the Examiner's rejections are sufficient to overcome these rejections, Applicant's silence as to assertions by the Examiner in the Office Action or certain requirements that may be applicable to such rejections (e.g., whether a reference constitutes prior art, ability to combine references, assertions as to patentability of dependent claims) is not a concession by Applicant that such assertions are accurate or such requirements have been met, and Applicant reserves the right to analyze and dispute such in the future.

Please grant any extensions of time required to enter this response and charge any additional required fees to Deposit Account 06-0916.

Respectfully submitted,

FINNEGAN, HENDERSON, FARABOW,
GARRETT & DUNNER, L.L.P.

Dated: April 4, 2013

By:_____

Armon Shahdadi
Reg. No. 70,728
(404) 653-6455

Electronic Acknowledgement Receipt

EFS ID:	15435581
Application Number:	11768892
International Application Number:	
Confirmation Number:	3817
Title of Invention:	Methods and Systems for Updating In-Game Content
First Named Inventor/Applicant Name:	Joshua Hartwell
Customer Number:	22852
Filer:	Brannon Charles McKay/Cecelia Dickerson
Filer Authorized By:	Brannon Charles McKay
Attorney Docket Number:	09685.0045-00000
Receipt Date:	04-APR-2013
Filing Date:	26-JUN-2007
Time Stamp:	15:55:21
Application Type:	Utility under 35 USC 111(a)

Payment information:

Submitted with Payment	no

File Listing:

Document Number	Document Description	File Name	File Size(Bytes)/ Message Digest	Multi Part /.zip	Pages (if appl.)
1	Amendment/Req. Reconsideration-After Non-Final Reject	Reply_09685.pdf	1898989 7edfb2563dd20461c5cf959bac98e45910113820	no	7

Warnings:

Information:

Total Files Size (in bytes):	1898989

This Acknowledgement Receipt evidences receipt on the noted date by the USPTO of the indicated documents, characterized by the applicant, and including page counts, where applicable. It serves as evidence of receipt similar to a Post Card, as described in MPEP 503.

New Applications Under 35 U.S.C. 111
If a new application is being filed and the application includes the necessary components for a filing date (see 37 CFR 1.53(b)-(d) and MPEP 506), a Filing Receipt (37 CFR 1.54) will be issued in due course and the date shown on this Acknowledgement Receipt will establish the filing date of the application.

National Stage of an International Application under 35 U.S.C. 371
If a timely submission to enter the national stage of an international application is compliant with the conditions of 35 U.S.C. 371 and other applicable requirements a Form PCT/DO/EO/903 indicating acceptance of the application as a national stage submission under 35 U.S.C. 371 will be issued in addition to the Filing Receipt, in due course.

New International Application Filed with the USPTO as a Receiving Office
If a new international application is being filed and the international application includes the necessary components for an international filing date (see PCT Article 11 and MPEP 1810), a Notification of the International Application Number and of the International Filing Date (Form PCT/RO/105) will be issued in due course, subject to prescriptions concerning national security, and the date shown on this Acknowledgement Receipt will establish the international filing date of the application.

PTO/SB/06 (09-11)
Approved for use through 1/31/2014. OMB 0651-0032
U.S. Patent and Trademark Office; U.S. DEPARTMENT OF COMMERCE
Under the Paperwork Reduction Act of 1995, no persons are required to respond to a collection of information unless it displays a valid OMB control number.

PATENT APPLICATION FEE DETERMINATION RECORD

Substitute for Form PTO-875

Application or Docket Number	Filing Date	
11/768,892	06/26/2007	☐ To be Mailed

ENTITY: ☒ LARGE ☐ SMALL ☐ MICRO

APPLICATION AS FILED – PART I

FOR	(Column 1) NUMBER FILED	(Column 2) NUMBER EXTRA	RATE ($)	FEE ($)
☒ BASIC FEE (37 CFR 1.16(a), (b), or (c))	N/A	N/A	N/A	**300**
☐ SEARCH FEE (37 CFR 1.16(k), (i), or (m))	N/A	N/A	N/A	
☐ EXAMINATION FEE (37 CFR 1.16(o), (p), or (q))	N/A	N/A	N/A	
TOTAL CLAIMS (37 CFR 1.16(i))	minus 20 =	*	x $ =	
INDEPENDENT CLAIMS (37 CFR 1.16(h))	minus 3 =	*	x $ =	
☐ APPLICATION SIZE FEE (37 CFR 1.16(s))	If the specification and drawings exceed 100 sheets of paper, the application size fee due is $310 ($155 for small entity) for each additional 50 sheets or fraction thereof. See 35 U.S.C. 41(a)(1)(G) and 37 CFR 1.16(s).			
☐ MULTIPLE DEPENDENT CLAIM PRESENT (37 CFR 1.16(j))				
* If the difference in column 1 is less than zero, enter "0" in column 2.			TOTAL	**300**

APPLICATION AS AMENDED – PART II

AMENDMENT **04/04/2013**

	(Column 1) CLAIMS REMAINING AFTER AMENDMENT		(Column 2) HIGHEST NUMBER PREVIOUSLY PAID FOR	(Column 3) PRESENT EXTRA	RATE ($)	ADDITIONAL FEE ($)
Total (37 CFR 1.16(i))	* 9	Minus	** 31	= 0	x $80 =	0
Independent (37 CFR 1.16(h))	* 1	Minus	***5	= 0	x $420 =	0
☐ Application Size Fee (37 CFR 1.16(s))						
☐ FIRST PRESENTATION OF MULTIPLE DEPENDENT CLAIM (37 CFR 1.16(j))						
					TOTAL ADD'L FEE	**0**

AMENDMENT

	(Column 1) CLAIMS REMAINING AFTER AMENDMENT		(Column 2) HIGHEST NUMBER PREVIOUSLY PAID FOR	(Column 3) PRESENT EXTRA	RATE ($)	ADDITIONAL FEE ($)
Total (37 CFR 1.16(i))	*	Minus	**	=	x $ =	
Independent (37 CFR 1.16(h))	*	Minus	***	=	x $ =	
☐ Application Size Fee (37 CFR 1.16(s))						
☐ FIRST PRESENTATION OF MULTIPLE DEPENDENT CLAIM (37 CFR 1.16(j))						
					TOTAL ADD'L FEE	

* If the entry in column 1 is less than the entry in column 2, write "0" in column 3.
** If the "Highest Number Previously Paid For" IN THIS SPACE is less than 20, enter "20".
*** If the "Highest Number Previously Paid For" IN THIS SPACE is less than 3, enter "3".
The "Highest Number Previously Paid For" (Total or Independent) is the highest number found in the appropriate box in column 1.

LIE
/GWENDOLYN MYERS/

This collection of information is required by 37 CFR 1.16. The information is required to obtain or retain a benefit by the public which is to file (and by the USPTO to process) an application. Confidentiality is governed by 35 U.S.C. 122 and 37 CFR 1.14. This collection is estimated to take 12 minutes to complete, including gathering, preparing, and submitting the completed application form to the USPTO. Time will vary depending upon the individual case. Any comments on the amount of time you require to complete this form and/or suggestions for reducing this burden, should be sent to the Chief Information Officer, U.S. Patent and Trademark Office, U.S. Department of Commerce, P.O. Box 1450, Alexandria, VA 22313-1450. DO NOT SEND FEES OR COMPLETED FORMS TO THIS ADDRESS. **SEND TO: Commissioner for Patents, P.O. Box 1450, Alexandria, VA 22313-1450.**
If you need assistance in completing the form, call 1-800-PTO-9199 and select option 2.

UNITED STATES PATENT AND TRADEMARK OFFICE

UNITED STATES DEPARTMENT OF COMMERCE
United States Patent and Trademark Office
Address: COMMISSIONER FOR PATENTS
P.O. Box 1450
Alexandria, Virginia 22313-1450
www.uspto.gov

APPLICATION NO.	FILING DATE	FIRST NAMED INVENTOR	ATTORNEY DOCKET NO.	CONFIRMATION NO.
11/768,892	06/26/2007	Joshua Hartwell	09685.0045-00000	3817

22852 7590 01/04/2013
FINNEGAN, HENDERSON, FARABOW, GARRETT & DUNNER LLP
901 NEW YORK AVENUE, NW
WASHINGTON, DC 20001-4413

EXAMINER
LIAO, HSINCHUN

ART UNIT	PAPER NUMBER
2649	

MAIL DATE	DELIVERY MODE
01/04/2013	PAPER

Please find below and/or attached an Office communication concerning this application or proceeding.

The time period for reply, if any, is set in the attached communication.

Office Action Summary	Application No.	Applicant(s)	
	11/768,892	HARTWELL, JOSHUA	
	Examiner	Art Unit	
	HSIN-CHUN LIAO	2649	

-- The MAILING DATE of this communication appears on the cover sheet with the correspondence address --

Period for Reply

A SHORTENED STATUTORY PERIOD FOR REPLY IS SET TO EXPIRE 3 MONTH(S) OR THIRTY (30) DAYS, WHICHEVER IS LONGER, FROM THE MAILING DATE OF THIS COMMUNICATION.

- Extensions of time may be available under the provisions of 37 CFR 1.136(a). In no event, however, may a reply be timely filed after SIX (6) MONTHS from the mailing date of this communication.
- If NO period for reply is specified above, the maximum statutory period will apply and will expire SIX (6) MONTHS from the mailing date of this communication.
- Failure to reply within the set or extended period for reply will, by statute, cause the application to become ABANDONED (35 U.S.C. § 133). Any reply received by the Office later than three months after the mailing date of this communication, even if timely filed, may reduce any earned patent term adjustment. See 37 CFR 1.704(b).

Status

1)☒ Responsive to communication(s) filed on *29 October 2012*.

2a)☐ This action is **FINAL**. 2b)☒ This action is non-final.

3)☐ Since this application is in condition for allowance except for formal matters, prosecution as to the merits is closed in accordance with the practice under *Ex parte Quayle*, 1935 C.D. 11, 453 O.G. 213.

Disposition of Claims

4)☒ Claim(s) *1-31* is/are pending in the application.

4a) Of the above claim(s) *1-14 and 20-31* is/are withdrawn from consideration.

5)☐ Claim(s) _____ is/are allowed.

6)☒ Claim(s) *15-19* is/are rejected.

7)☐ Claim(s) _____ is/are objected to.

8)☐ Claim(s) _____ are subject to restriction and/or election requirement.

Application Papers

9)☐ The specification is objected to by the Examiner.

10)☐ The drawing(s) filed on _____ is/are: a)☐ accepted or b)☐ objected to by the Examiner.

Applicant may not request that any objection to the drawing(s) be held in abeyance. See 37 CFR 1.85(a).

Replacement drawing sheet(s) including the correction is required if the drawing(s) is objected to. See 37 CFR 1.121(d).

11)☐ The oath or declaration is objected to by the Examiner. Note the attached Office Action or form PTO-152.

Priority under 35 U.S.C. § 119

12)☐ Acknowledgment is made of a claim for foreign priority under 35 U.S.C. § 119(a)-(d) or (f).

a)☐ All b)☐ Some * c)☐ None of:

1.☐ Certified copies of the priority documents have been received.

2.☐ Certified copies of the priority documents have been received in Application No. _____.

3.☐ Copies of the certified copies of the priority documents have been received in this National Stage application from the International Bureau (PCT Rule 17.2(a)).

* See the attached detailed Office action for a list of the certified copies not received.

Attachment(s)

1) ☐ Notice of References Cited (PTO-892)

2) ☐ Notice of Draftsperson's Patent Drawing Review (PTO-948)

3) ☐ Information Disclosure Statement(s) (PTO/SB/08) Paper No(s)/Mail Date _____.

4) ☐ Interview Summary (PTO-413) Paper No(s)/Mail Date. _____ .

5) ☐ Notice of Informal Patent Application

6) ☐ Other: _____.

DETAILED ACTION

Election/Restrictions

1. Applicant's election of claims 15-19 in the reply filed on 10/29/2012 is acknowledged. Claims 1-14 and 20-31 are withdrawn from consideration as being directed to non-elected subject matter.

Response to Arguments

2. Applicant's arguments filed 10/29/2012 have been fully considered but they are not persuasive. In pages 10 and 11 of the remarks, applicant argues that Gatto does not anticipate claims 15-19 because the graphics rendering software itself is not content, but instead just displays existing content. The examiner respectfully disagrees. Claim 15 recites "the updated content being usable in the video-game that already exists on the mobile communication device". Gatto discloses "the updated content (Gatto paragraph 0050, 0051, Fig. 9 note: updated content reads on "additional software", downloaded file, images.) being usable in the video-game (Gatto paragraph 0008 "internet gaming") that already exists on the mobile communication device".

Based on foregoing reasons, Claim 15 still reads on Gatto's arrangement.

Claim Rejections - 35 USC § 102

1. The following is a quotation of the appropriate paragraphs of 35 U.S.C. 102 that form the basis for the rejections under this section made in this Office action:

> A person shall be entitled to a patent unless –
>
> (b) the invention was patented or described in a printed publication in this or a foreign country or in public use or on sale in this country, more than one year prior to the date of application for patent in the United States.

2. Claims 15-19 are rejected under 35 U.S.C. 102(b) as being anticipated by Gatto (US 20040127279).

In regards to claim 15, Gatto discloses a method for providing updated content to a mobile communication device (Gatto paragraph 0048) for use in a mobile video game (Gatto paragraph 0008 “internet gaming”), the method comprising the steps of:

receiving a request for the updated content from the mobile communication device, the updated content (Gatto paragraph 0051 note: this reads on “hyperlinks to download promotional items”) being usable in the video-game that already exists on the mobile communication device;

checking what updated content to send based on one of the factors including a type of the mobile communication device (Gatto paragraph 0050 note: graphics is based on types of "mobile devices” e.g. phone or laptop computer), a telecom service associated with the mobile communication device, and a service provider of the telecom service; and

uploading updated content to the communications device (Gatto Fig. 16 paragraph 0051 note: players download content. therefore, the server 1604 upload content to the players 1606), the content being usable when the video game operates on the communications device.

In regards to claim 16, Gatto discloses a method for providing updated content to a mobile communication device as described above. Gatto further discloses the updated content is promotional content (Gatto paragraph 0051 note: this reads on “promotional items”).

In regards to claim 17, Gatto discloses a method for providing updated content to a mobile communication device as described above. Gatto further discloses comprising the step of checking (Gatto paragraph 0009, 0050 note: this reads on “a secure distribution...a secure validation”) whether the communications device should receive the updated content before uploading the updated content to the communications device.

In regards to claim 18, Gatto discloses a method for providing updated content to a mobile communication device as described above. Gatto further discloses the step of sending information to the mobile communication device as part of the updated content, the information providing an in-game placement location (Gatto paragraph 0051 note: this reads on “image”. an image requires pixel e.g. x, y locations) associated with the updated content.

In regards to claim 19, Gatto discloses a method for providing updated content to a mobile communication device as described above. Gatto further discloses the step of tracking (Gatto paragraph 0016, 0019 note: this reads on progressively reveal/replace i.e. “secret layer” is tracked) what has been uploaded to the mobile communication device.

Conclusion

Any inquiry concerning this communication or earlier communications from the examiner should be directed to HSIN-CHUN LIAO whose telephone number is (571)270-7701. The examiner can normally be reached on Monday - Thursday, 8:00AM-4:00PM.

If attempts to reach the examiner by telephone are unsuccessful, the examiner's supervisor, Edward Urban can be reached on (571)272-7899. The fax phone number for the organization where this application or proceeding is assigned is 571-273-8300.

Information regarding the status of an application may be obtained from the Patent Application Information Retrieval (PAIR) system. Status information for published applications may be obtained from either Private PAIR or Public PAIR. Status information for unpublished applications is available through Private PAIR only. For more information about the PAIR system, see http://pair-direct.uspto.gov. Should you have questions on access to the Private PAIR system, contact the Electronic Business Center (EBC) at 866-217-9197 (toll-free). If you would like assistance from a USPTO Customer Service Representative or access to the automated information system, call 800-786-9199 (IN USA OR CANADA) or 571-272-1000.

/HSIN-CHUN LIAO/
Examiner, Art Unit 2649

Index of Claims	Application/Control No.	Applicant(s)/Patent Under Reexamination
	11768892	HARTWELL, JOSHUA
	Examiner	**Art Unit**
	HSIN-CHUN LIAO	2618

✓	Rejected	-	Cancelled	N	Non-Elected	A	Appeal
=	Allowed	÷	Restricted	I	Interference	O	Objected

☐ Claims renumbered in the same order as presented by applicant ☐ CPA ☐ T.D. ☐ R.1.47

CLAIM		DATE								
Final	Original	05/02/2012	09/03/2012	12/31/2012						
	1	÷	✓	-						
	2	÷	✓	-						
	3	÷	✓	-						
	4	÷	✓	-						
	5	÷	✓	-						
	6	÷	✓	-						
	7	÷	✓	-						
	8	÷	✓	-						
	9	÷	✓	-						
	10	÷	✓	-						
	11	÷	✓	-						
	12	÷	✓	-						
	13	÷	✓	-						
	14	÷	✓	-						
	15	÷	-	✓						
	16	÷	-	✓						
	17	÷	-	✓						
	18	÷	-	✓						
	19	÷	-	✓						
	20	÷	-	-						
	21	÷	-	-						
	22	÷	-	-						
	23	÷	-	-						
	24	÷	-	-						
	25	÷	-	-						
	26	÷	-	-						
	27	÷	-	-						
	28	÷	-	-						
	29	÷	-	-						
	30	÷	-	-						
	31	÷	-	-						

PATENT
Attorney Docket No. 09685.0045-00000

IN THE UNITED STATES PATENT AND TRADEMARK OFFICE

In re Application of:	)	
	)	
Joshua HARTWELL	)	Group Art Unit: 2618
	)	
Application No.: 11/768,892	)	Examiner: Hsinchun Liao
	)	
Filed: June 26, 2007	)	
	)	
For: METHODS AND SYSTEMS FOR UPDATING IN-GAME CONTENT	)	Confirmation No.: 3817

Commissioner for Patents
P.O. Box 1450
Alexandria, VA 22313-1450

Commissioner:

REPLY TO OFFICE ACTION

In reply to the Office Action mailed September 10, 2012, please amend the above-identified application as follows:

Amendments to the Claims are reflected in the listing of claims in this paper.

Remarks/Arguments follow the amendment sections of this paper.

AMENDMENTS TO THE CLAIMS:

This listing of claims will replace all prior versions and listings of claims in the application:

1. (Withdrawn) A mobile communication device that provides updated content associated with a mobile video game, comprising:

a screen for viewing by the user;

a processor; and

a memory containing instructions that, when executed by the processor, cause the communications device to:

contact a server;

check for updated content for use in the mobile video game;

download the updated content to the mobile communication device from the server; and

display the updated content within the video game, the video game being presented on the screen.

2. (Withdrawn) The mobile communication device of claim 1, wherein the updated content is promotional content.

3. (Withdrawn) The mobile communication device of claim 2, wherein the promotional content is pre-selected for the mobile communication device based upon at least one of the factors including a type of mobile communication device, a telecom

service associated with the mobile communication device, and a service provider of the telecom service.

4. (Withdrawn) The mobile communication device of claim 1, wherein the content is displayed within the mobile video game at a location on the screen based on user interaction with the mobile communication device.

5. (Withdrawn) The mobile communication device of claim 1, wherein checking for updated content is performed upon a request by a user of the mobile communication device.

6. (Withdrawn) The mobile communication device of clam 1, wherein checking for updated content is performed periodically.

7. (Withdrawn) The mobile communication device of claim 1, wherein the instructions further allow the mobile communication device to receive an initial message from the server prior to downloading the updated content.

8. (Withdrawn) The mobile communication device of claim 7, wherein the initial message contains information that is displayed to the user on the screen.

9. (Withdrawn) The mobile communication device of claim 7, wherein the initial message is pre-selected based upon at least one of the factors including a type of the

mobile communication device, a telecommunication service, subscription associated with the mobile communication device, and a service provider of the telecommunication service.

10. (Withdrawn) The mobile communication device of claim 7, wherein the communications device sends a follow-up request to the server indicating that the user wishes to download the updated content from the server; and

the communications device downloads the updated content after sending the follow-up request.

11. (Withdrawn) The mobile communication device of claim 1, wherein the instructions further cause the mobile communication device to check whether the updated content should be downloaded before downloading the updated content from the server.

12. (Withdrawn) A computer-readable medium containing instructions for execution by a mobile communication device, the instructions causing the mobile communication device to perform a method that provides updated content associated with a mobile video game, the method comprising the steps of:

contacting a server;

checking for updated content for use in the video game;

downloading the updated content to the communications device; and

displaying the updated content within the video game, the video game being presented within a screen controlled by the mobile communication device.

13. (Withdrawn) The computer-readable medium of claim 12, wherein the updated content is promotional content.

14. (Withdrawn) The computer-readable medium of claim 13, wherein the promotional is pre-selected for the mobile communication device based upon at least one of the factors including a type of the mobile communication device, a telecom service associated with the mobile communication device, and a service provider of the telecom service.

15. (Original) A method for providing updated content to a mobile communication device for use in a mobile video game, the method comprising the steps of:

receiving a request for the updated content from the mobile communication device, the updated content being usable in the video-game that already exists on the mobile communication device;

checking what updated content to send based on one of the factors including a type of the mobile communication device, a telecom service associated with the mobile communication device, and a service provider of the telecom service; and

uploading updated content to the communications device, the content being usable when the video game operates on the communications device.

16. (Original) The method of claim 15, wherein the updated content is promotional content.

17. (Original) The method of claim 15, further comprising the step of checking whether the communications device should receive the updated content before uploading the updated content to the communications device.

18. (Original) The method of claim 15, further comprising the step of sending information to the mobile communication device as part of the updated content, the information providing an in-game placement location associated with the updated content.

19. (Original) The method of claim 15, further comprising the step of tracking what has been uploaded to the mobile communication device.

20. (Withdrawn) A system for providing updated content associated with of a mobile video game to a mobile communication device, the system comprising:

a storage medium for storing pre-selected content for use in a video game;

a server in communication with the storage medium; and

an interface coupled to the server and a network, wherein the interface receives a request for updated content from the mobile communication device over the network;

wherein the server is operative to receive the request through the interface and utilize the request to:

check what pre-selected content to send; and

send the pre-selected content stored on the storage medium to the mobile communication device as the updated content for the mobile video game.

21. (Withdrawn) The system of claim 20, wherein the updated content is promotional content.

22. (Withdrawn) The system of claim 20, wherein the server sends information to the mobile communication device regarding the in-game placement location of the content, the information being part of the updated content.

23. (Withdrawn) The system of claim 20, wherein the server sends a message to the mobile communication device in response to receiving the request, the message relating to the content.

24. (Withdrawn) The system of claim 23, wherein the message is pre-selected by the server based on a model type associated with the communications device, a service subscription associated with the communications device, or a service provider for the service subscription associated with the communications device.

25. (Withdrawn) The system of claim 20, wherein the server checks whether the mobile communication device should receive the updated content before sending the updated content to the communications device.

26. (Withdrawn) The system of claim 20, wherein the server tracks the distribution of updated content.

27. (Withdrawn) A method for selling promotional content in a mobile video game for use on a mobile communications device, comprising the steps of:

associating updated content with a third party in exchange for payment from the third party;

receiving a request for updated content from the mobile communication device; and

uploading the updated content to the mobile communication device, the updated content being displayable within the mobile video game.

28. (Withdrawn) The method of claim 27, wherein the payment is based on the number of times that the updated content is uploaded.

29. (Withdrawn) The method of claim 27, wherein the updated content is pre-selected based on the proximity of the mobile communications device to a physical location associated with the third party.

30. (Withdrawn) The method of claim 29, wherein the request is received in response to a change in the proximity of the mobile communications device to the location associated with the third party.

31. (Withdrawn) The method of claim 27, wherein payment is based on the length of time the updated content is available for download.

REMARKS

Claims 1-31 are pending in this application, of which claims 15-19 are presented for prosecution, claim 15 being independent. These claims were elected in the Supplemental Response to Restriction Requirement filed July 11, 2012.

In the Office Action dated September 10, 2012 ("Office Action"), the Examiner rejected claims 1-14 under 35 U.S.C. § 102(b) as being anticipated by U.S. Pat. Publication No. 2004/0127279 ("*Gatto*"). However, as discussed with the Examiner, Applicant previously elected to prosecute claims 15-19 of Group II, whereas the Office Action is directed to Group I. (*See* Supplemental Response to Restriction Requirement, dated June 7, 2012.)

Applicant thanks the Examiner for the telephone call in which the Examiner indicated he would withdraw the rejection and issue a new non-final Office Action directed to claims 15-19 upon receipt of this Reply. As indicated on the phone, Applicant has formally withdrawn claims 1-14 and 20-31, leaving claims 15-19 presented for prosecution, which reflects Applicant's election of Group II made on June 7, 2012. Accordingly, Applicant requests that the Examiner withdraw the rejection and issue a new non-final Office Action directed to claims 15-19, as agreed.

Applicant additionally notes that *Gatto* does not anticipate claims 15-19. At the very least, *Gatto* does not disclose "receiving a request for the updated content from the mobile communication device, the updated content being usable in the video-game," "checking what updated content to send based on one of the factors including a type of the mobile communication device, a telecom service associated with the mobile communication device, and a service provider of the telecom service; and uploading

updated content to the communications device," as claimed. This is at least because paragraph [0050] of *Gatto*, which the Examiner has cited with respect to claims 1-14, discloses downloading "graphics rendering" software rather than updated content. Office Action, p. 3. The graphics rendering software itself is not content, but instead just displays existing content.

CONCLUSION

In view of the foregoing amendments and remarks, Applicant respectfully requests reconsideration and reexamination of this application and the timely allowance of the claims 15-19 (or at the very least, the issuance of a new non-final Office Action directed to those claims, as agreed).

As Applicant's remarks with respect to the Examiner's rejections are sufficient to overcome these rejections, Applicant's silence as to assertions by the Examiner in the Office Action or certain requirements that may be applicable to such rejections (e.g., whether a reference constitutes prior art, ability to combine references, assertions as to patentability of dependent claims) is not a concession by Applicant that such assertions are accurate or such requirements have been met, and Applicant reserves the right to analyze and dispute such in the future.

Please grant any extensions of time required to enter this response and charge any additional required fees to Deposit Account 06-0916.

Respectfully submitted,

FINNEGAN, HENDERSON, FARABOW,
GARRETT & DUNNER, L.L.P.

Dated: October 29, 2012

By: / Brannon McKay /

Brannon C. McKay
Reg. No. 57,491
(404) 653-6410

Electronic Acknowledgement Receipt

EFS ID:	14097899
Application Number:	11768892
International Application Number:	
Confirmation Number:	3817
Title of Invention:	Methods and Systems for Updating In-Game Content
First Named Inventor/Applicant Name:	Joshua Hartwell
Customer Number:	22852
Filer:	Brannon Charles McKay/Cecelia Dickerson
Filer Authorized By:	Brannon Charles McKay
Attorney Docket Number:	09685.0045-00000
Receipt Date:	29-OCT-2012
Filing Date:	26-JUN-2007
Time Stamp:	16:22:11
Application Type:	Utility under 35 USC 111(a)

Payment information:

Submitted with Payment	no

File Listing:

Document Number	Document Description	File Name	File Size(Bytes)/ Message Digest	Multi Part /.zip	Pages (if appl.)
1	Amendment/Req. Reconsideration-After Non-Final Reject	Reply.pdf	399520 5ad9d63ff469108fd6cb35c6e24e469200509495	no	12

Warnings:

Information:

Total Files Size (in bytes):	399520

This Acknowledgement Receipt evidences receipt on the noted date by the USPTO of the indicated documents, characterized by the applicant, and including page counts, where applicable. It serves as evidence of receipt similar to a Post Card, as described in MPEP 503.

New Applications Under 35 U.S.C. 111
If a new application is being filed and the application includes the necessary components for a filing date (see 37 CFR 1.53(b)-(d) and MPEP 506), a Filing Receipt (37 CFR 1.54) will be issued in due course and the date shown on this Acknowledgement Receipt will establish the filing date of the application.

National Stage of an International Application under 35 U.S.C. 371
If a timely submission to enter the national stage of an international application is compliant with the conditions of 35 U.S.C. 371 and other applicable requirements a Form PCT/DO/EO/903 indicating acceptance of the application as a national stage submission under 35 U.S.C. 371 will be issued in addition to the Filing Receipt, in due course.

New International Application Filed with the USPTO as a Receiving Office
If a new international application is being filed and the international application includes the necessary components for an international filing date (see PCT Article 11 and MPEP 1810), a Notification of the International Application Number and of the International Filing Date (Form PCT/RO/105) will be issued in due course, subject to prescriptions concerning national security, and the date shown on this Acknowledgement Receipt will establish the international filing date of the application.

PTO/SB/06 (07-06)
Approved for use through 1/31/2007. OMB 0651-0032
U.S. Patent and Trademark Office; U.S. DEPARTMENT OF COMMERCE
Under the Paperwork Reduction Act of 1995, no persons are required to respond to a collection of information unless it displays a valid OMB control number.

PATENT APPLICATION FEE DETERMINATION RECORD

Substitute for Form PTO-875

Application or Docket Number	Filing Date	
11/768,892	06/26/2007	☐ To be Mailed

APPLICATION AS FILED – PART I

FOR	(Column 1) NUMBER FILED	(Column 2) NUMBER EXTRA	SMALL ENTITY ☐ RATE ($)	SMALL ENTITY FEE ($)	OR	OTHER THAN SMALL ENTITY RATE ($)	OTHER THAN SMALL ENTITY FEE ($)
☐ BASIC FEE (37 CFR 1.16(a), (b), or (c))	N/A	N/A	N/A			N/A	
☐ SEARCH FEE (37 CFR 1.16(k), (i), or (m))	N/A	N/A	N/A			N/A	
☐ EXAMINATION FEE (37 CFR 1.16(o), (p), or (q))	N/A	N/A	N/A			N/A	
TOTAL CLAIMS (37 CFR 1.16(i))	minus 20 =	*	X $ =		OR	X $ =	
INDEPENDENT CLAIMS (37 CFR 1.16(h))	minus 3 =	*	X $ =			X $ =	
☐ APPLICATION SIZE FEE (37 CFR 1.16(s))	If the specification and drawings exceed 100 sheets of paper, the application size fee due is $250 ($125 for small entity) for each additional 50 sheets or fraction thereof. See 35 U.S.C. 41(a)(1)(G) and 37 CFR 1.16(s).						
☐ MULTIPLE DEPENDENT CLAIM PRESENT (37 CFR 1.16(j))							
* If the difference in column 1 is less than zero, enter "0" in column 2.			TOTAL			TOTAL	

APPLICATION AS AMENDED – PART II

AMENDMENT 10/29/2012

	(Column 1) CLAIMS REMAINING AFTER AMENDMENT		(Column 2) HIGHEST NUMBER PREVIOUSLY PAID FOR	(Column 3) PRESENT EXTRA	SMALL ENTITY RATE ($)	SMALL ENTITY ADDITIONAL FEE ($)	OR	OTHER THAN SMALL ENTITY RATE ($)	OTHER THAN SMALL ENTITY ADDITIONAL FEE ($)
Total (37 CFR 1.16(i))	* 31	Minus	** 31	= 0	X $ =		OR	X $62=	0
Independent (37 CFR 1.16(h))	* 5	Minus	***5	= 0	X $ =		OR	X $250=	0
☐ Application Size Fee (37 CFR 1.16(s))									
☐ FIRST PRESENTATION OF MULTIPLE DEPENDENT CLAIM (37 CFR 1.16(j))							OR		
					TOTAL ADD'L FEE		OR	TOTAL ADD'L FEE	0

AMENDMENT

	(Column 1) CLAIMS REMAINING AFTER AMENDMENT		(Column 2) HIGHEST NUMBER PREVIOUSLY PAID FOR	(Column 3) PRESENT EXTRA	RATE ($)	ADDITIONAL FEE ($)		RATE ($)	ADDITIONAL FEE ($)
Total (37 CFR 1.16(i))	*	Minus	**	=	X $ =		OR	X $ =	
Independent (37 CFR 1.16(h))	*	Minus	***	=	X $ =		OR	X $ =	
☐ Application Size Fee (37 CFR 1.16(s))									
☐ FIRST PRESENTATION OF MULTIPLE DEPENDENT CLAIM (37 CFR 1.16(j))							OR		
					TOTAL ADD'L FEE		OR	TOTAL ADD'L FEE	

* If the entry in column 1 is less than the entry in column 2, write "0" in column 3.
** If the "Highest Number Previously Paid For" IN THIS SPACE is less than 20, enter "20".
*** If the "Highest Number Previously Paid For" IN THIS SPACE is less than 3, enter "3".
The "Highest Number Previously Paid For" (Total or Independent) is the highest number found in the appropriate box in column 1.

Legal Instrument Examiner:
/ANDREA FREEMAN/

This collection of information is required by 37 CFR 1.16. The information is required to obtain or retain a benefit by the public which is to file (and by the USPTO to process) an application. Confidentiality is governed by 35 U.S.C. 122 and 37 CFR 1.14. This collection is estimated to take 12 minutes to complete, including gathering, preparing, and submitting the completed application form to the USPTO. Time will vary depending upon the individual case. Any comments on the amount of time you require to complete this form and/or suggestions for reducing this burden, should be sent to the Chief Information Officer, U.S. Patent and Trademark Office, U.S. Department of Commerce, P.O. Box 1450, Alexandria, VA 22313-1450. DO NOT SEND FEES OR COMPLETED FORMS TO THIS ADDRESS. **SEND TO: Commissioner for Patents, P.O. Box 1450, Alexandria, VA 22313-1450.**
If you need assistance in completing the form, call 1-800-PTO-9199 and select option 2.

UNITED STATES PATENT AND TRADEMARK OFFICE

UNITED STATES DEPARTMENT OF COMMERCE
United States Patent and Trademark Office
Address: COMMISSIONER FOR PATENTS
P.O. Box 1450
Alexandria, Virginia 22313-1450
www.uspto.gov

APPLICATION NO.	FILING DATE	FIRST NAMED INVENTOR	ATTORNEY DOCKET NO.	CONFIRMATION NO.
11/768,892	06/26/2007	Joshua Hartwell	09685.0045-00000	3817

22852 7590 09/10/2012
FINNEGAN, HENDERSON, FARABOW, GARRETT & DUNNER LLP
901 NEW YORK AVENUE, NW
WASHINGTON, DC 20001-4413

EXAMINER
LIAO, HSINCHUN

ART UNIT	PAPER NUMBER
2618	

MAIL DATE	DELIVERY MODE
09/10/2012	PAPER

Please find below and/or attached an Office communication concerning this application or proceeding.

The time period for reply, if any, is set in the attached communication.

Office Action Summary	Application No.	Applicant(s)	
	11/768,892	HARTWELL, JOSHUA	
	Examiner	Art Unit	
	HSIN-CHUN LIAO	2618	

-- The MAILING DATE of this communication appears on the cover sheet with the correspondence address --

Period for Reply

A SHORTENED STATUTORY PERIOD FOR REPLY IS SET TO EXPIRE 3 MONTH(S) OR THIRTY (30) DAYS, WHICHEVER IS LONGER, FROM THE MAILING DATE OF THIS COMMUNICATION.

- Extensions of time may be available under the provisions of 37 CFR 1.136(a). In no event, however, may a reply be timely filed after SIX (6) MONTHS from the mailing date of this communication.
- If NO period for reply is specified above, the maximum statutory period will apply and will expire SIX (6) MONTHS from the mailing date of this communication.
- Failure to reply within the set or extended period for reply will, by statute, cause the application to become ABANDONED (35 U.S.C. § 133). Any reply received by the Office later than three months after the mailing date of this communication, even if timely filed, may reduce any earned patent term adjustment. See 37 CFR 1.704(b).

Status

1)☒ Responsive to communication(s) filed on *11 June 2012*.

2a)☐ This action is **FINAL**. 2b)☒ This action is non-final.

3)☐ Since this application is in condition for allowance except for formal matters, prosecution as to the merits is closed in accordance with the practice under *Ex parte Quayle*, 1935 C.D. 11, 453 O.G. 213.

Disposition of Claims

4)☒ Claim(s) *1-31* is/are pending in the application.

4a) Of the above claim(s) *15-31* is/are withdrawn from consideration.

5)☐ Claim(s) _____ is/are allowed.

6)☒ Claim(s) *1-14* is/are rejected.

7)☐ Claim(s) _____ is/are objected to.

8)☐ Claim(s) _____ are subject to restriction and/or election requirement.

Application Papers

9)☐ The specification is objected to by the Examiner.

10)☒ The drawing(s) filed on *26 June 2007* is/are: a)☒ accepted or b)☐ objected to by the Examiner.

Applicant may not request that any objection to the drawing(s) be held in abeyance. See 37 CFR 1.85(a).

Replacement drawing sheet(s) including the correction is required if the drawing(s) is objected to. See 37 CFR 1.121(d).

11)☐ The oath or declaration is objected to by the Examiner. Note the attached Office Action or form PTO-152.

Priority under 35 U.S.C. § 119

12)☐ Acknowledgment is made of a claim for foreign priority under 35 U.S.C. § 119(a)-(d) or (f).

a)☐ All b)☐ Some * c)☐ None of:

1.☐ Certified copies of the priority documents have been received.

2.☐ Certified copies of the priority documents have been received in Application No. _____.

3.☐ Copies of the certified copies of the priority documents have been received in this National Stage application from the International Bureau (PCT Rule 17.2(a)).

* See the attached detailed Office action for a list of the certified copies not received.

Attachment(s)

1) ☒ Notice of References Cited (PTO-892)

2) ☐ Notice of Draftsperson's Patent Drawing Review (PTO-948)

3) ☒ Information Disclosure Statement(s) (PTO/SB/08) Paper No(s)/Mail Date _____.

4) ☐ Interview Summary (PTO-413) Paper No(s)/Mail Date. _____ .

5) ☐ Notice of Informal Patent Application

6) ☐ Other: _____.

DETAILED ACTION

Election/Restrictions

1. Applicant's election with traverse of claims 1-14 drawn to a mobile communication device in the reply filed on 6/11/2012 is acknowledged. The traversal is on the ground(s) that claims contain overlapping subject matter and there would not be a serious search and/or examination burden absent restriction, as alleged by the Examiner. This is not found persuasive because the inventions require *at least* a different field of search (for example, searching different electronic resources, or employing different search queries):

a. Invention I requires a search associated with a mobile communication device that downloads updated content.

b. Invention II requires a search associated with a method for uploading updated content.

c. Invention III requires a search associated with a system for providing updated content comprising a storage medium, a server and an interface.

d. Invention IV requires a search associated with selling and payment of promotional content.

The requirement is still deemed proper and is therefore made FINAL. Claims 15-31 are withdrawn from consideration as being directed to non-elected subject matter.

Claim Rejections - 35 USC § 102

1. The following is a quotation of the appropriate paragraphs of 35 U.S.C. 102 that form the basis for the rejections under this section made in this Office action:

> A person shall be entitled to a patent unless –
>
> (b) the invention was patented or described in a printed publication in this or a foreign country or in public use or on sale in this country, more than one year prior to the date of application for patent in the United States.

2. Claims 1-14 are rejected under 35 U.S.C. 102(b) as being anticipated by Gatto (US 20040127279).

In regards to claims 1 and 12, Gatto discloses a mobile communication device that provides updated content associated with a mobile video game (Gatto paragraph 0048, 0050), comprising:

a screen for viewing by the user (Gatto Fig. 1);

a processor (Gatto paragraph 0048 a mobile device inherently has a processor); and

a memory containing instructions (Gatto paragraph 0048 a mobile device inherently has a memory) that, when executed by the processor, cause the communications device to:

contact a server (Gatto Fig. 16 Item 1604);

check for updated content for use in the mobile video game (Gatto paragraph 0050 “special software”);

download the updated content to the mobile communication device from the server (Gatto paragraph 0050 “download” special software); and display the updated

content within the video game, the video game being presented on the screen (Gatto paragraph 0050 “advanced display graphics”).

In regards to claims 2 and 13, Gatto discloses a mobile communication device as described above. Gatto further discloses the updated content is promotional content (Gatto Abstract “promotional layer”).

In regards to claims 3 and 14, Gatto discloses a mobile communication device as described above. Gatto further discloses the promotional content is pre-selected for the mobile communication device based upon at least one of the factors including a type of mobile communication device (Gatto paragraph 0050 note: graphics is based on types of "mobile devices” e.g. phone or laptop computer).

In regards to claim 4, Gatto discloses a mobile communication device as described above. Gatto further discloses the content is displayed within the mobile video game at a location on the screen based on user interaction with the mobile communication device (Gatto paragraph 0049 “player interaction”).

In regards to claim 5, Gatto discloses a mobile communication device as described above. Gatto further discloses checking for updated content is performed upon a request by a user of the mobile communication device (Gatto paragraph 0049, 0050).

In regards to claim 6, Gatto discloses a mobile communication device as described above. Gatto further discloses checking for updated content is performed periodically (Gatto paragraph 0049, 0060 “predetermine time period”).

In regards to claim 7, Gatto discloses a mobile communication device as described above. Gatto further discloses the instructions further allow the mobile communication device to receive an initial message (Gatto paragraph 0008 “email ticket”) from the server prior to downloading the updated content.

In regards to claim 8, Gatto discloses a mobile communication device as described above. Gatto further discloses the initial message contains information that is displayed to the user on the screen (Gatto Fig. 1).

In regards to claim 9, Gatto discloses a mobile communication device as described above. Gatto further discloses the initial message is pre-selected based upon at least one of the factors including a type of the mobile communication device (Gatto paragraph 0050 note: graphics is based on types of "mobile devices” e.g. phone or laptop computer).

In regards to claim 10, Gatto discloses a mobile communication device as described above. Gatto further discloses the communications device sends a follow-up request to the server indicating that the user wishes to download the updated content from the server; and the communications device downloads the updated content after sending the follow-up request (Gatto paragraph 0049, 0050).

In regards to claim 11, Gatto discloses a mobile communication device as described above. Gatto further discloses the instructions further cause the mobile communication device to check whether the updated content should be downloaded before downloading the updated content from the server (Gatto paragraph 0050 note: a

mobile communication device such as a laptop can check whether a newer version of graphics such as “Flash” should be downloaded).

Conclusion

Any inquiry concerning this communication or earlier communications from the examiner should be directed to HSIN-CHUN LIAO whose telephone number is (571)270-7701. The examiner can normally be reached on Monday - Thursday, 8:00AM-4:00PM.

If attempts to reach the examiner by telephone are unsuccessful, the examiner’s supervisor, Edward Urban can be reached on (571)272-7899. The fax phone number for the organization where this application or proceeding is assigned is 571-273-8300.

Information regarding the status of an application may be obtained from the Patent Application Information Retrieval (PAIR) system. Status information for published applications may be obtained from either Private PAIR or Public PAIR. Status information for unpublished applications is available through Private PAIR only. For more information about the PAIR system, see http://pair-direct.uspto.gov. Should you have questions on access to the Private PAIR system, contact the Electronic Business Center (EBC) at 866-217-9197 (toll-free). If you would like assistance from a USPTO Customer Service Representative or access to the automated information system, call 800-786-9199 (IN USA OR CANADA) or 571-272-1000.

/HL/
Examiner, AU 2618

/LANA N. LE/
Primary Examiner, Art Unit 2614

Notice of References Cited	Application/Control No. 11/768,892	Applicant(s)/Patent Under Reexamination HARTWELL, JOSHUA	
	Examiner HSIN-CHUN LIAO	Art Unit 2618	Page 1 of 1

U.S. PATENT DOCUMENTS

*		Document Number Country Code-Number-Kind Code	Date MM-YYYY	Name	Classification
*	A	US-2004/0127279	07-2004	Gatto et al.	463/017
	B	US-			
	C	US-			
	D	US-			
	E	US-			
	F	US-			
	G	US-			
	H	US-			
	I	US-			
	J	US-			
	K	US-			
	L	US-			
	M	US-			

FOREIGN PATENT DOCUMENTS

*		Document Number Country Code-Number-Kind Code	Date MM-YYYY	Country	Name	Classification
	N					
	O					
	P					
	Q					
	R					
	S					
	T					

NON-PATENT DOCUMENTS

*		Include as applicable: Author, Title Date, Publisher, Edition or Volume, Pertinent Pages)
	U	
	V	
	W	
	X	

*A copy of this reference is not being furnished with this Office action. (See MPEP § 707.05(a).)
Dates in MM-YYYY format are publication dates. Classifications may be US or foreign.

IDS Form PTO/SB/08: Substitute for form 1449A/PTO

INFORMATION DISCLOSURE STATEMENT BY APPLICANT

(Use as many sheets as necessary)

Sheet	1	of	1

Complete if Known	
Application Number	11/768,892
Filing Date	June 26, 2007
First Named Inventor	Joshua HARTWELL
Art Unit	2618
Examiner Name	Not Yet Assigned
Attorney Docket Number	09685.0045-00000

U.S. PATENTS AND PUBLISHED U.S. PATENT APPLICATIONS

Examiner Initials*	Cite No.[1]	Document Number Number-Kind Code[2] *(if known)*	Issue or Publication Date MM-DD-YYYY	Name of Patentee or Applicant of Cited Document	Pages, Columns, Lines, Where Relevant Passages or Relevant Figures Appear
		US-			
		US-			
		US-			
		US-			
		US-			
		US-			
		US-			
		US-			
		US-			
		US-			
		US-			

Note: Submission of copies of U.S. Patents and published U.S. Patent Applications is not required.

FOREIGN PATENT DOCUMENTS

Examiner Initials*	Cite No.[1]	Foreign Patent Document Country Code[3] Number[4] Kind Code[5] *(if known)*	Publication Date MM-DD-YYYY	Name of Patentee or Applicant of Cited Document	Pages, Columns, Lines, Where Relevant Passages or Relevant Figures Appear	Translation[6]

NONPATENT LITERATURE DOCUMENTS

Examiner Initials*	Cite No.[1]	Include name of the author (in CAPITAL LETTERS), title of the article (when appropriate), title of the item (book, magazine, journal, serial, symposium, catalog, etc.), date, page(s), volume-issue number(s), publisher, city and/or country where published.	Translation[6]
		PCT Notification Concerning Transmittal of Copy of International Preliminary Report on Patentability; International Application No. PCT/US/2008/068250; dated January 14, 2010; 7 pgs.	
/H.L./		PCT Notification Concerning Transmittal of Copy of International Preliminary Report on Patentability; International Application No. PCT/US/2008/068249; dated January 14, 2010; 6 pgs.	
/H.L./			

Examiner Signature	/Hsinchun Liao/	Date Considered	09/02/2012

EXAMINER: Initial if reference considered, whether or not citation is in conformance with MPEP 609. Draw line through citation if not in conformance and not considered. Include copy of this form with next communication to applicant.

IDS Form PTO/SB/08: Substitute for form 1449A/PTO

INFORMATION DISCLOSURE STATEMENT BY APPLICANT

(Use as many sheets as necessary)

Sheet	1	of	1

Complete if Known	
Application Number	11/768,892
Filing Date	June 26, 2007
First Named Inventor	Joshua Hartwell
Art Unit	2617
Examiner Name	N/A
Attorney Docket Number	09685.0045-00000

U.S. PATENTS AND PUBLISHED U.S. PATENT APPLICATIONS

Examiner Initials*	Cite No.[1]	Document Number Number-Kind Code[2] *(if known)*	Issue or Publication Date MM-DD-YYYY	Name of Patentee or Applicant of Cited Document	Pages, Columns, Lines, Where Relevant Passages or Relevant Figures Appear
/H.L./		US-2007/0022442 A1	01-25-2007	Gil et al.	p. 1, para. [0009]; p. 9, para. [0078].
		US-			
		US-			
		US-			
		US-			
		US-			
		US-			
		US-			
		US-			
		US-			
		US-			

Note: Submission of copies of U.S. Patents and published U.S. Patent Applications is not required.

FOREIGN PATENT DOCUMENTS

Examiner Initials*	Cite No.[1]	Foreign Patent Document Country Code[3] Number[4] Kind Code[5] *(if known)*	Publication Date MM-DD-YYYY	Name of Patentee or Applicant of Cited Document	Pages, Columns, Lines, Where Relevant Passages or Relevant Figures Appear	Translation[6]

NONPATENT LITERATURE DOCUMENTS

Examiner Initials*	Cite No.[1]	Include name of the author (in CAPITAL LETTERS), title of the article (when appropriate), title of the item (book, magazine, journal, serial, symposium, catalog, etc.), date, page(s), volume-issue number(s), publisher, city and/or country where published.	Translation[6]

Examiner Signature	/Hsinchun Liao/	Date Considered	09/02/2012

EXAMINER: Initial if reference considered, whether or not citation is in conformance with MPEP 609. Draw line through citation if not in conformance and not considered. Include copy of this form with next communication to applicant.

Index of Claims	Application/Control No.	Applicant(s)/Patent Under Reexamination
	11768892	HARTWELL, JOSHUA
	Examiner	**Art Unit**
	HSIN-CHUN LIAO	2618

✓	Rejected	-	Cancelled	N	Non-Elected	A	Appeal
=	Allowed	÷	Restricted	I	Interference	O	Objected

☐ Claims renumbered in the same order as presented by applicant ☐ CPA ☐ T.D. ☐ R.1.47

CLAIM		DATE								
Final	Original	05/02/2012	09/03/2012							
	1	÷	✓							
	2	÷	✓							
	3	÷	✓							
	4	÷	✓							
	5	÷	✓							
	6	÷	✓							
	7	÷	✓							
	8	÷	✓							
	9	÷	✓							
	10	÷	✓							
	11	÷	✓							
	12	÷	✓							
	13	÷	✓							
	14	÷	✓							
	15	÷	-							
	16	÷	-							
	17	÷	-							
	18	÷	-							
	19	÷	-							
	20	÷	-							
	21	÷	-							
	22	÷	-							
	23	÷	-							
	24	÷	-							
	25	÷	-							
	26	÷	-							
	27	÷	-							
	28	÷	-							
	29	÷	-							
	30	÷	-							
	31	÷	-							

UNITED STATES PATENT AND TRADEMARK OFFICE

UNITED STATES DEPARTMENT OF COMMERCE
United States Patent and Trademark Office
Address: COMMISSIONER FOR PATENTS
P.O. Box 1450
Alexandria, Virginia 22313-1450
www.uspto.gov

BIB DATA SHEET

CONFIRMATION NO. 3817

SERIAL NUMBER	FILING or 371(c) DATE	CLASS	GROUP ART UNIT	ATTORNEY DOCKET NO.
11/768,892	06/26/2007 **RULE**	455	2618	09685.0045-00000

APPLICANTS
Joshua Hartwell, Santa Monica, CA;

**** CONTINUING DATA ***************************

**** FOREIGN APPLICATIONS ***************************

**** IF REQUIRED, FOREIGN FILING LICENSE GRANTED ****
07/17/2007

Foreign Priority claimed ☐ Yes ☑ No 35 USC 119(a-d) conditions met ☐ Yes ☑ No Verified and Acknowledged /HSIN-CHUN LIAO/ Examiner's Signature	☐ Met after Allowance Initials	STATE OR COUNTRY	SHEETS DRAWINGS	TOTAL CLAIMS	INDEPENDENT CLAIMS
		CA	7	31	5

ADDRESS

FINNEGAN, HENDERSON, FARABOW, GARRETT & DUNNER LLP
901 NEW YORK AVENUE, NW
WASHINGTON, DC 20001-4413
UNITED STATES

TITLE

Methods and Systems for Updating In-Game Content

FILING FEE RECEIVED		
1950	FEES: Authority has been given in Paper No._____ to charge/credit DEPOSIT ACCOUNT No._____ for following:	☐ All Fees ☐ 1.16 Fees (Filing) ☐ 1.17 Fees (Processing Ext. of time) ☐ 1.18 Fees (Issue) ☐ Other _____ ☐ Credit

Search Notes	Application/Control No.	Applicant(s)/Patent Under Reexamination
	11768892	HARTWELL, JOSHUA
	Examiner	**Art Unit**
	HSIN-CHUN LIAO	2618

SEARCHED

Class	Subclass	Date	Examiner
455	66.1	9/3/2012	hl
725	62	9/3/2012	hl

SEARCH NOTES

Search Notes	Date	Examiner
See East search note.	9/3/2012	hl
Inventor names searched using PALM and EAST. See the attached PDF file.	9/3/2012	hl

INTERFERENCE SEARCH

Class	Subclass	Date	Examiner

IDS Form PTO/SB/08: Substitute for form 1449A/PTO

INFORMATION DISCLOSURE STATEMENT BY APPLICANT

(Use as many sheets as necessary)

Sheet	1	of	2

Complete if Known	
Application Number	11/768,892
Filing Date	June 26, 2007
First Named Inventor	Joshua Hartwell
Art Unit	2617
Examiner Name	N/A
Attorney Docket Number	09685.0045-00000

DEC 05 2008 PATENT & TRADEMARK OFFICE

U.S. PATENTS AND PUBLISHED U.S. PATENT APPLICATIONS

Examiner Initials*	Cite No.[1]	Document Number Number-Kind Code[2] *(if known)*	Issue or Publication Date MM-DD-YYYY	Name of Patentee or Applicant of Cited Document	Pages, Columns, Lines, Where Relevant Passages or Relevant Figures Appear
/H.L./		US-2002/0166119 A1	11-07-2002	Cristofalo	
/H.L./		US-2003/0224855 A1	12-04-2003	Cunningham	
/H.L./		US-2006/0136297 A1	06-22-2006	Willis et al.	
/H.L./		US-2006/0128469 A1	06-15-2006	Willis et al.	
/H.L./		US-2004/0049419 A1	03-11-2004	Knight	
/H.L./		US-2003/0105669 A1	06-05-2003	Tsuchiya	
/H.L./		US-6,219,696 B1	04/17/2001	Wynblatt et al.	
/H.L./		US-2006/0130046 A1	06/15/2006	O'Neill	
/H.L./		US-2005/0240476 A1	10-27-2005	Bigott	
		US-			
		US-			
		US-			

Note: Submission of copies of U.S. Patents and published U.S. Patent Applications is not required.

FOREIGN PATENT DOCUMENTS

Examiner Initials*	Cite No.[1]	Foreign Patent Document Country Code[3] Number[4] Kind Code[5] *(if known)*	Publication Date MM-DD-YYYY	Name of Patentee or Applicant of Cited Document	Pages, Columns, Lines, Where Relevant Passages or Relevant Figures Appear	Translation[6]

NONPATENT LITERATURE DOCUMENTS

Examiner Initials*	Cite No.[1]	Include name of the author (in CAPITAL LETTERS), title of the article (when appropriate), title of the item (book, magazine, journal, serial, symposium, catalog, etc.), date, page(s), volume-issue number(s), publisher, city and/or country where published.	Translation[6]
/H.L./		International Search Report and The Written Opinion of the International Searching Authority, or the Declaration; International Application No. PCT/US 08/68249; International Filing Date June 25, 2008; 8 pgs.	
/H.L./		International Search Report and The Written Opinion of the International Searching Authority, or the Declaration; International Application No. PCT/US 08/68250 International Filing Date June 25, 2008; 8 pgs.	

Examiner Signature	/Hsinchun Liao/	Date Considered	09/02/2012

EXAMINER: Initial if reference considered, whether or not citation is in conformance with MPEP 609. Draw line through citation if not in conformance and not considered. Include copy of this form with next communication to applicant.

EAST Search History

EAST Search History (Prior Art)

Ref #	Hits	Search Query	DBs	Default Operator	Plurals	Time Stamp
L4	0	phone same game same advertise$5 and 455/66.1.ccls.	US-PGPUB; USPAT; USOCR	ADJ	OFF	2012/09/02 15:27
L5	1	phone same game same advertise$5 and 725/62.ccls.	US-PGPUB; USPAT; USOCR	ADJ	OFF	2012/09/02 15:28
L6	0	(mobile phone) same game same advertise$5 and 455/66.1.ccls.	US-PGPUB; USPAT; USOCR	ADJ	OFF	2012/09/02 15:29
L7	0	(mobile device) same advertis$5 same game and 455/66.1/ccls.	US-PGPUB; USPAT; USOCR	ADJ	OFF	2012/09/02 15:29
L8	1	(mobile device) same advertis$5 same game and 455/66.1.ccls.	US-PGPUB; USPAT; USOCR	ADJ	OFF	2012/09/02 15:29
L9	0	(mobile device) same advertis$5 same game and 725/62.ccls.	US-PGPUB; USPAT; USOCR	ADJ	OFF	2012/09/02 15:29
S2	487	phone same game same advertise$5	US-PGPUB; USPAT; USOCR	ADJ	OFF	2012/05/01 14:11
S3	144	(mobile phone) same game same advertise$5	US-PGPUB; USPAT; USOCR	ADJ	OFF	2012/05/01 14:11
S15	178	(mobile device) same advertis$5 same game	US-PGPUB; USPAT; USOCR	ADJ	OFF	2012/09/01 11:42

9/ 2/ 2012 3:31:02 PM
C:\ Users\ hliao\ Documents\ EAST\ Workspaces\ 11_cases\ 11768892\ 11768892.wsp

PATENT
Attorney Docket No. 09685.0045-00000

IN THE UNITED STATES PATENT AND TRADEMARK OFFICE

In re Application of:	)	
	)	
Joshua HARTWELL	)	Group Art Unit: 2618
	)	
Application No.: 11/768,892	)	Examiner: Hsinchun Liao
	)	
Filed: June 26, 2007	)	
	)	
For: SYSTEMS AND METHODS FOR UPDATING IN-GAME CONTENT	)	Confirmation No.: 3817

Commissioner for Patents
P.O. Box 1450
Alexandria, VA 22313-1450

Commissioner:

SUPPLEMENTAL RESPONSE TO RESTRICTION REQUIREMENT

Applicant submits this Supplemental Response to supplement Applicant's June 11, 2012, Response to Restriction Requirement, which previously responded to a Restriction Requirement dated May 9, 2012. In that Restriction Requirement, the Examiner required restriction under 37 U.S.C. § 121 between:

Group I - Claims 1-14, allegedly drawn to a mobile communication device that downloads updated content, classified in class 455, subclass 407;

Group II - Claims 15-19, allegedly drawn to a method for uploading updated content, classified in class 455, subclass 408;

Group III - Claims 20-26, allegedly drawn to a system for providing updated content comprising a storage medium, a server and an interface, classified in class 455, subclass 403; and

Group IV - Claims 27-31, allegedly drawn to selling and payment of promotional content, classified in class 455, subclass 406.

As discussed on the telephone with the Examiner on Monday, June 25, 2012, Applicant wishes to change the provisional election of the prior Response. In particular, as stated on the telephone, **Applicant provisionally elects Group II, claims 15-19**, allegedly drawn to a method for uploading updated content, classified in class 455, subclass 408 (rather than Group I, Claims 1-14, as stated in the prior Response.) The traversal contained in the prior Response of June 11, 2012, still stands.

Please grant any additional extensions of time required to enter this response and charge any additional required fees to our Deposit Account No. 06-0916.

Respectfully submitted,

FINNEGAN, HENDERSON, FARABOW,
GARRETT & DUNNER, L.L.P.

Dated: July 11, 2012

By: /Brannon C. McKay/
Brannon C. McKay
Reg. No. 57,491

Electronic Acknowledgement Receipt

EFS ID:	13227186
Application Number:	11768892
International Application Number:	
Confirmation Number:	3817
Title of Invention:	Methods and Systems for Updating In-Game Content
First Named Inventor/Applicant Name:	Joshua Hartwell
Customer Number:	22852
Filer:	Brannon Charles McKay/Cecelia Dickerson
Filer Authorized By:	Brannon Charles McKay
Attorney Docket Number:	09685.0045-00000
Receipt Date:	11-JUL-2012
Filing Date:	26-JUN-2007
Time Stamp:	16:06:11
Application Type:	Utility under 35 USC 111(a)

Payment information:

Submitted with Payment	no

File Listing:

Document Number	Document Description	File Name	File Size(Bytes)/ Message Digest	Multi Part /.zip	Pages (if appl.)
1	Response to Election / Restriction Filed	Supplemental_Response.pdf	70886 51d5f6111bc6a960b7e1471c1eeccae053ac4f70	no	2

Warnings:

Information:

Total Files Size (in bytes):	70886

This Acknowledgement Receipt evidences receipt on the noted date by the USPTO of the indicated documents, characterized by the applicant, and including page counts, where applicable. It serves as evidence of receipt similar to a Post Card, as described in MPEP 503.

New Applications Under 35 U.S.C. 111
If a new application is being filed and the application includes the necessary components for a filing date (see 37 CFR 1.53(b)-(d) and MPEP 506), a Filing Receipt (37 CFR 1.54) will be issued in due course and the date shown on this Acknowledgement Receipt will establish the filing date of the application.

National Stage of an International Application under 35 U.S.C. 371
If a timely submission to enter the national stage of an international application is compliant with the conditions of 35 U.S.C. 371 and other applicable requirements a Form PCT/DO/EO/903 indicating acceptance of the application as a national stage submission under 35 U.S.C. 371 will be issued in addition to the Filing Receipt, in due course.

New International Application Filed with the USPTO as a Receiving Office
If a new international application is being filed and the international application includes the necessary components for an international filing date (see PCT Article 11 and MPEP 1810), a Notification of the International Application Number and of the International Filing Date (Form PCT/RO/105) will be issued in due course, subject to prescriptions concerning national security, and the date shown on this Acknowledgement Receipt will establish the international filing date of the application.

PATENT
Attorney Docket No. 09685.0045-00000

IN THE UNITED STATES PATENT AND TRADEMARK OFFICE

In re Application of:	)	
	)	
Joshua HARTWELL	)	Group Art Unit: 2618
	)	
Application No.: 11/768,892	)	Examiner: Hsinchun Liao
	)	
Filed: June 26, 2007	)	
	)	
For: SYSTEMS AND METHODS FOR UPDATING IN-GAME CONTENT	)	Confirmation No.: 3817

Commissioner for Patents
P.O. Box 1450
Alexandria, VA 22313-1450

Commissioner:

RESPONSE TO RESTRICTION REQUIREMENT

In a restriction requirement dated May 9, 2012, the period of response extending to June 11, 2012 (due to June 9 falling on a Saturday), the Examiner required restriction under 35 U.S.C. § 121 between:

Group I - Claims 1-14, allegedly drawn to a mobile communication device that downloads updated content, classified in class 455, subclass 407;

Group II - Claims 15-19, allegedly drawn to a method for uploading updated content, classified in class 455, subclass 408;

Group III - Claims 20-26, allegedly drawn to a system for providing updated content comprising a storage medium, a server and an interface, classified in class 455, subclass 403; and

Group IV - Claims 27-31, allegedly drawn to selling and payment of promotional content, classified in class 455, subclass 406.

Applicant traverses the restriction requirement but provisionally elects Group I, Claims 1-14, allegedly drawn to a mobile communication device that downloads updated content, classified in class 455, subclass 407.

In restricting the claims, the Examiner alleges that the claims of Groups I-IV are distinct subcombinations because they do not overlap in scope. Office Action, p. 3. Applicant respectfully disagrees. Although the claims do contain distinct features from one another, they also recite some similar and overlapping features. For example, claim 1 (of Group I) recites "download[ing] the updated content to the mobile communication device from the server; and display[ing] the updated content within the video game," which overlaps with "uploading updated content to the communications device, the content being usable when the video game operates on the communications device," as recited in claim 15 (of Group II). Claim 20 (of Group III) similarly recites "send the pre-selected content stored on the storage medium to the mobile communication device as the updated content for the mobile video game," and claim 27 (of Group IV) recites "uploading the updated content to the mobile communication device, the updated content being displayable within the mobile video game." Therefore, the claims clearly contain overlapping subject matter.

Additionally, there would not be a serious search and/or examination burden absent restriction, as alleged by the Examiner. Office Action, p. 4. Even if the search spans multiple subclasses, as alleged, the features of the claims between Groups I-IV are related (e.g., as shown above) such that similar prior art would likely apply to each

group, meaning that the search would not be a "serious" burden. This lack of serious burden is highlighted by the fact that the Examiner classified the allegedly distinct subcombinations in adjacent subclasses (403, 406, 407, and 408) within class 455.

For these reasons, Applicant traverses with election.

Please grant any additional extensions of time required to enter this response and charge any additional required fees to our Deposit Account No. 06-0916.

Respectfully submitted,

FINNEGAN, HENDERSON, FARABOW,
GARRETT & DUNNER, L.L.P.

/Brannon C. McKay/

Dated: June 11, 2012

By:_____
Brannon C. McKay
Reg. No. 57,491

Electronic Acknowledgement Receipt

EFS ID:	12987439
Application Number:	11768892
International Application Number:	
Confirmation Number:	3817
Title of Invention:	Methods and Systems for Updating In-Game Content
First Named Inventor/Applicant Name:	Joshua Hartwell
Customer Number:	22852
Filer:	Brannon Charles McKay
Filer Authorized By:	
Attorney Docket Number:	09685.0045-00000
Receipt Date:	11-JUN-2012
Filing Date:	26-JUN-2007
Time Stamp:	23:05:47
Application Type:	Utility under 35 USC 111(a)

Payment information:

Submitted with Payment	no

File Listing:

Document Number	Document Description	File Name	File Size(Bytes)/ Message Digest	Multi Part /.zip	Pages (if appl.)
1	Response to Election / Restriction Filed	Election.pdf	110538 f79d26d78a1ac8d3614de900c371e75ebf825437	no	3

Warnings:

Information:

Total Files Size (in bytes):	110538

This Acknowledgement Receipt evidences receipt on the noted date by the USPTO of the indicated documents, characterized by the applicant, and including page counts, where applicable. It serves as evidence of receipt similar to a Post Card, as described in MPEP 503.

New Applications Under 35 U.S.C. 111
If a new application is being filed and the application includes the necessary components for a filing date (see 37 CFR 1.53(b)-(d) and MPEP 506), a Filing Receipt (37 CFR 1.54) will be issued in due course and the date shown on this Acknowledgement Receipt will establish the filing date of the application.

National Stage of an International Application under 35 U.S.C. 371
If a timely submission to enter the national stage of an international application is compliant with the conditions of 35 U.S.C. 371 and other applicable requirements a Form PCT/DO/EO/903 indicating acceptance of the application as a national stage submission under 35 U.S.C. 371 will be issued in addition to the Filing Receipt, in due course.

New International Application Filed with the USPTO as a Receiving Office
If a new international application is being filed and the international application includes the necessary components for an international filing date (see PCT Article 11 and MPEP 1810), a Notification of the International Application Number and of the International Filing Date (Form PCT/RO/105) will be issued in due course, subject to prescriptions concerning national security, and the date shown on this Acknowledgement Receipt will establish the international filing date of the application.

UNITED STATES PATENT AND TRADEMARK OFFICE

UNITED STATES DEPARTMENT OF COMMERCE
United States Patent and Trademark Office
Address: COMMISSIONER FOR PATENTS
P.O. Box 1450
Alexandria, Virginia 22313-1450
www.uspto.gov

APPLICATION NO.	FILING DATE	FIRST NAMED INVENTOR	ATTORNEY DOCKET NO.	CONFIRMATION NO.
11/768,892	06/26/2007	Joshua Hartwell	09685.0045-00000	3817

22852 7590 05/09/2012
FINNEGAN, HENDERSON, FARABOW, GARRETT & DUNNER LLP
901 NEW YORK AVENUE, NW
WASHINGTON, DC 20001-4413

EXAMINER
LIAO, HSINCHUN

ART UNIT	PAPER NUMBER
2618	

MAIL DATE	DELIVERY MODE
05/09/2012	PAPER

Please find below and/or attached an Office communication concerning this application or proceeding.

The time period for reply, if any, is set in the attached communication.

Office Action Summary	Application No.	Applicant(s)	
	11/768,892	HARTWELL, JOSHUA	
	Examiner	Art Unit	
	HSIN-CHUN LIAO	2618	

-- The MAILING DATE of this communication appears on the cover sheet with the correspondence address --

Period for Reply

A SHORTENED STATUTORY PERIOD FOR REPLY IS SET TO EXPIRE 1 MONTH(S) OR THIRTY (30) DAYS, WHICHEVER IS LONGER, FROM THE MAILING DATE OF THIS COMMUNICATION.

- Extensions of time may be available under the provisions of 37 CFR 1.136(a). In no event, however, may a reply be timely filed after SIX (6) MONTHS from the mailing date of this communication.
- If NO period for reply is specified above, the maximum statutory period will apply and will expire SIX (6) MONTHS from the mailing date of this communication.
- Failure to reply within the set or extended period for reply will, by statute, cause the application to become ABANDONED (35 U.S.C. § 133). Any reply received by the Office later than three months after the mailing date of this communication, even if timely filed, may reduce any earned patent term adjustment. See 37 CFR 1.704(b).

Status

1)☒ Responsive to communication(s) filed on *26 June 2007*.

2a)☐ This action is **FINAL**. 2b)☐ This action is non-final.

3)☐ An election was made by the applicant in response to a restriction requirement set forth during the interview on _____; the restriction requirement and election have been incorporated into this action.

4)☐ Since this application is in condition for allowance except for formal matters, prosecution as to the merits is closed in accordance with the practice under *Ex parte Quayle*, 1935 C.D. 11, 453 O.G. 213.

Disposition of Claims

5)☒ Claim(s) *1-31* is/are pending in the application.

5a) Of the above claim(s) _____ is/are withdrawn from consideration.

6)☐ Claim(s) _____ is/are allowed.

7)☐ Claim(s) _____ is/are rejected.

8)☐ Claim(s) _____ is/are objected to.

9)☒ Claim(s) *1-31* are subject to restriction and/or election requirement.

Application Papers

10)☐ The specification is objected to by the Examiner.

11)☐ The drawing(s) filed on _____ is/are: a)☐ accepted or b)☐ objected to by the Examiner.

Applicant may not request that any objection to the drawing(s) be held in abeyance. See 37 CFR 1.85(a).

Replacement drawing sheet(s) including the correction is required if the drawing(s) is objected to. See 37 CFR 1.121(d).

12)☐ The oath or declaration is objected to by the Examiner. Note the attached Office Action or form PTO-152.

Priority under 35 U.S.C. § 119

13)☐ Acknowledgment is made of a claim for foreign priority under 35 U.S.C. § 119(a)-(d) or (f).

a)☐ All b)☐ Some * c)☐ None of:

1.☐ Certified copies of the priority documents have been received.

2.☐ Certified copies of the priority documents have been received in Application No. _____.

3.☐ Copies of the certified copies of the priority documents have been received in this National Stage application from the International Bureau (PCT Rule 17.2(a)).

* See the attached detailed Office action for a list of the certified copies not received.

Attachment(s)

1) ☐ Notice of References Cited (PTO-892)

2) ☐ Notice of Draftsperson's Patent Drawing Review (PTO-948)

3) ☐ Information Disclosure Statement(s) (PTO/SB/08) Paper No(s)/Mail Date _____.

4) ☐ Interview Summary (PTO-413) Paper No(s)/Mail Date. _____ .

5) ☐ Notice of Informal Patent Application

6) ☐ Other: _____.

DETAILED ACTION

Election/Restrictions

1. Restriction to one of the following inventions is required under 35 U.S.C. 121:

   I. Claims 1-14, drawn to a mobile communication device that downloads updated content, classified in class 455, subclass 407.

   II. Claims 15-19, drawn to a method for uploading updated content, classified in class 455, subclass 408.

   III. Claims 20-26, drawn to a system for providing updated content comprising a storage medium, a server and an interface, classified in class 455, subclass 403.

   IV. Claims 27-31, drawn to selling and payment of promotional content, classified in class 455, subclass 406.

The inventions are distinct, each from the other because of the following reasons:

2. Inventions I, II, III and IV are related as combination and subcombination. Inventions in this relationship are distinct if it can be shown that (1) the combination as claimed does not require the particulars of the subcombination as claimed for patentability, and (2) that the subcombination has utility by itself or in other combinations (MPEP § 806.05(c)). In the instant case, the combination as claimed does not require the particulars of the subcombination as claimed because the presence of the claim to invention II is evidenced that the details of invention I are not

required for patentability (and vice versa). The subcombination has separate utility such as uploading content.

3. Inventions I, II, III and IV are related as subcombinations disclosed as usable together in a single combination. The subcombinations are distinct if they do not overlap in scope and are not obvious variants, and if it is shown that at least one subcombination is separately usable. In the instant case, subcombination I has separate utility such as downloading content. Subcombination II has separate utility such as uploading content. Subcombination III has separate utility such as storage medium and interface. Subcombination IV has separate utility such as selling and payment. See MPEP § 806.05(d).

The examiner has required restriction between subcombinations usable together. Where applicant elects a subcombination and claims thereto are subsequently found allowable, any claim(s) depending from or otherwise requiring all the limitations of the allowable subcombination will be examined for patentability in accordance with 37 CFR 1.104. See MPEP § 821.04(a). Applicant is advised that if any claim presented in a continuation or divisional application is anticipated by, or includes all the limitations of, a claim that is allowable in the present application, such claim may be subject to provisional statutory and/or nonstatutory double patenting rejections over the claims of the instant application.

The examiner has required restriction between combination and subcombination inventions. Where applicant elects a subcombination, and claims thereto are subsequently found allowable, any claim(s) depending from or otherwise requiring all

the limitations of the allowable subcombination will be examined for patentability in accordance with 37 CFR 1.104. See MPEP § 821.04(a). Applicant is advised that if any claim presented in a continuation or divisional application is anticipated by, or includes all the limitations of, a claim that is allowable in the present application, such claim may be subject to provisional statutory and/or nonstatutory double patenting rejections over the claims of the instant application.

4. Restriction for examination purposes as indicated is proper because all these inventions listed in this action are independent or distinct for the reasons given above and there would be a serious search and/or examination burden if restriction were not required because at least the following reason(s) apply:

(a) the inventions have acquired a separate status in the art in view of their different classification;

(b) the inventions have acquired a separate status in the art due to their recognized divergent subject matter;

(c) the inventions require a different field of search (for example, searching different classes/subclasses or electronic resources, or employing different search queries);

(d) the prior art applicable to one invention would not likely be applicable to another invention;

(e) the inventions are likely to raise different non-prior art issues under 35 U.S.C. 101 and/or 35 U.S.C. 112, first paragraph. .

Applicant is advised that the reply to this requirement to be complete <u>must</u> include (i) an election of a invention to be examined even though the requirement may be traversed (37 CFR 1.143) **and (ii) identification of the claims encompassing the elected invention**.

The election of an invention may be made with or without traverse. To reserve a right to petition, the election must be made with traverse. If the reply does not distinctly and specifically point out supposed errors in the restriction requirement, the election shall be treated as an election without traverse. Traversal must be presented at the time of election in order to be considered timely. Failure to timely traverse the requirement will result in the loss of right to petition under 37 CFR 1.144. If claims are added after the election, applicant must indicate which of these claims are readable upon the elected invention.

Should applicant traverse on the ground that the inventions are not patentably distinct, applicant should submit evidence or identify such evidence now of record showing the inventions to be obvious variants or clearly admit on the record that this is the case. In either instance, if the examiner finds one of the inventions unpatentable over the prior art, the evidence or admission may be used in a rejection under 35 U.S.C. 103(a) of the other invention.

Any inquiry concerning this communication or earlier communications from the examiner should be directed to HSIN-CHUN LIAO whose telephone number is (571)270-7701. The examiner can normally be reached on Monday - Thursday, 8:00AM-4:00PM.

If attempts to reach the examiner by telephone are unsuccessful, the examiner's supervisor, Edward Urban can be reached on (571)272-7899. The fax phone number for the organization where this application or proceeding is assigned is 571-273-8300.

Information regarding the status of an application may be obtained from the Patent Application Information Retrieval (PAIR) system. Status information for published applications may be obtained from either Private PAIR or Public PAIR. Status information for unpublished applications is available through Private PAIR only. For more information about the PAIR system, see http://pair-direct.uspto.gov. Should you have questions on access to the Private PAIR system, contact the Electronic Business Center (EBC) at 866-217-9197 (toll-free). If you would like assistance from a USPTO Customer Service Representative or access to the automated information system, call 800-786-9199 (IN USA OR CANADA) or 571-272-1000.

/HL/
Examiner, AU 2618

/LANA N. LE/
Primary Examiner, Art Unit 2614

Index of Claims	Application/Control No.	Applicant(s)/Patent Under Reexamination
	11768892	HARTWELL, JOSHUA
	Examiner	**Art Unit**
	HSIN-CHUN LIAO	2618

✓	Rejected	-	Cancelled	N	Non-Elected	A	Appeal
=	Allowed	÷	Restricted	I	Interference	O	Objected

☐ Claims renumbered in the same order as presented by applicant ☐ CPA ☐ T.D. ☐ R.1.47

CLAIM		DATE								
Final	Original	05/02/2012								
	1	÷								
	2	÷								
	3	÷								
	4	÷								
	5	÷								
	6	÷								
	7	÷								
	8	÷								
	9	÷								
	10	÷								
	11	÷								
	12	÷								
	13	÷								
	14	÷								
	15	÷								
	16	÷								
	17	÷								
	18	÷								
	19	÷								
	20	÷								
	21	÷								
	22	÷								
	23	÷								
	24	÷								
	25	÷								
	26	÷								
	27	÷								
	28	÷								
	29	÷								
	30	÷								
	31	÷								

IDS Form PTO/SB/08: Substitute for form 1449A/PTO				Complete if Known	
INFORMATION DISCLOSURE STATEMENT BY APPLICANT				*Application Number*	11/768,892
				Filing Date	June 26, 2007
				First Named Inventor	Joshua HARTWELL
				Art Unit	2618
(Use as many sheets as necessary)				*Examiner Name*	Not Yet Assigned
Sheet	1	of	1	*Attorney Docket Number*	09685.0045-00000

U.S. PATENTS AND PUBLISHED U.S. PATENT APPLICATIONS

Examiner Initials*	Cite No.[1]	Document Number Number-Kind Code[2] *(if known)*	Issue or Publication Date MM-DD-YYYY	Name of Patentee or Applicant of Cited Document	Pages, Columns, Lines, Where Relevant Passages or Relevant Figures Appear
		US-			
		US-			
		US-			
		US-			
		US-			
		US-			
		US-			
		US-			
		US-			
		US-			
		US-			

Note: Submission of copies of U.S. Patents and published U.S. Patent Applications is not required.

FOREIGN PATENT DOCUMENTS

Examiner Initials*	Cite No.[1]	Foreign Patent Document Country Code[3] Number[4] Kind Code[5] *(if known)*	Publication Date MM-DD-YYYY	Name of Patentee or Applicant of Cited Document	Pages, Columns, Lines, Where Relevant Passages or Relevant Figures Appear	Translation[6]

NONPATENT LITERATURE DOCUMENTS

Examiner Initials*	Cite No.[1]	Include name of the author (in CAPITAL LETTERS), title of the article (when appropriate), title of the item (book, magazine, journal, serial, symposium, catalog, etc.), date, page(s), volume-issue number(s), publisher, city and/or country where published.	Translation[6]
		PCT Notification Concerning Transmittal of Copy of International Preliminary Report on Patentability; International Application No. PCT/US/2008/068250; dated January 14, 2010; 7 pgs.	
		PCT Notification Concerning Transmittal of Copy of International Preliminary Report on Patentability; International Application No. PCT/US/2008/068249; dated January 14, 2010; 6 pgs.	

Examiner Signature		Date Considered	

EXAMINER: Initial if reference considered, whether or not citation is in conformance with MPEP 609. Draw line through citation if not in conformance and not considered. Include copy of this form with next communication to applicant.

PATENT COOPERATION TREATY

From the INTERNATIONAL BUREAU

PCT

NOTIFICATION CONCERNING TRANSMITTAL OF COPY OF INTERNATIONAL PRELIMINARY REPORT ON PATENTABILITY (CHAPTER I OF THE PATENT COOPERATION TREATY)
(PCT Rule 44bis.1(c))

To: CBH|FLB|RCS|BZM

STANLEY, Robert, C.
Finnegan, Henderson, Farabow
Garrett & Dunner L.l.p.
901 New York Avenue, N.w.
Washington, DC 20001
ETATS-UNIS D'AMERIQUE

Date of mailing *(day/month/year)* 14 January 2010 (14.01.2010)		
Applicant's or agent's file reference 9685.45-304	IMPORTANT NOTICE	
International application No. PCT/US2008/068250	International filing date *(day/month/year)* 25 June 2008 (25.06.2008)	Priority date *(day/month/year)* 26 June 2007 (26.06.2007)
Applicant GOSUB 60, INC. et al		

The International Bureau transmits herewith a copy of the international preliminary report on patentability (Chapter I of the Patent Cooperation Treaty)

ABANDON PER CLT.

The International Bureau of WIPO 34, chemin des Colombettes 1211 Geneva 20, Switzerland Facsimile No. +41 22 338 82 70	Authorized officer Yoshiko Kuwahara 2/2/10 e-mail: pt07.pct@wipo.int A. Thompson

Form PCT/IB/326 (January 2004)

PATENT COOPERATION TREATY

PCT

INTERNATIONAL PRELIMINARY REPORT ON PATENTABILITY

(Chapter I of the Patent Cooperation Treaty)

(PCT Rule 44*bis*)

Applicant's or agent's file reference 9685.45-304	**FOR FURTHER ACTION**	See item 4 below
International application No. PCT/US2008/068250	International filing date *(day/month/year)* 25 June 2008 (25.06.2008)	Priority date *(day/month/year)* 26 June 2007 (26.06.2007)
International Patent Classification (8th edition unless older edition indicated) See relevant information in Form PCT/ISA/237		
Applicant GOSUB 60, INC.		

1. This international preliminary report on patentability (Chapter I) is issued by the International Bureau on behalf of the International Searching Authority under Rule 44 *bis*.1(a).

2. This REPORT consists of a total of 6 sheets, including this cover sheet.

   In the attached sheets, any reference to the written opinion of the International Searching Authority should be read as a reference to the international preliminary report on patentability (Chapter I) instead.

3. This report contains indications relating to the following items:

☒	Box No. I	Basis of the report
☐	Box No. II	Priority
☐	Box No. III	Non-establishment of opinion with regard to novelty, inventive step and industrial applicability
☐	Box No. IV	Lack of unity of invention
☒	Box No. V	Reasoned statement under Article 35(2) with regard to novelty, inventive step or industrial applicability; citations and explanations supporting such statement
☐	Box No. VI	Certain documents cited
☐	Box No. VII	Certain defects in the international application
☐	Box No. VIII	Certain observations on the international application

4. The International Bureau will communicate this report to designated Offices in accordance with Rules 44*bis*.3(c) and 93*bis*.1 but not, except where the applicant makes an express request under Article 23(2), before the expiration of 30 months from the priority date (Rule 44*bis* .2).

	Date of issuance of this report 05 January 2010 (05.01.2010)
The International Bureau of WIPO 34, chemin des Colombettes 1211 Geneva 20, Switzerland Facsimile No. +41 22 338 82 70	Authorized officer Yoshiko Kuwahara e-mail: pt07.pct@wipo.int

Form PCT/IB/373 (January 2004)

PATENT COOPERATION TREATY

From the
INTERNATIONAL SEARCHING AUTHORITY

To:
ROBERT C. STANLEY
FINNEGAN, HENDERSON, FARABOW,
901 NEW YORK AVENUE, N.W.
WASHINGTON, DC 20001

PCT

WRITTEN OPINION OF THE
INTERNATIONAL SEARCHING AUTHORITY

(PCT Rule 43*bis*.1)

Date of mailing *(day/month/year)*	09 OCT 2008
Applicant's or agent's file reference 9685.45-304	FOR FURTHER ACTION See paragraph 2 below

International application No.	International filing date *(day/month/year)*	Priority date *(day/month/year)*
PCT/US 08/68250	25 June 2008 (25.06.2008)	26 June 2007 (26.06.2007)

International Patent Classification (IPC) or both national classification and IPC
IPC(8) - G06Q 30/00 (2008.04)
USPC - 705/14

Applicant GOSUB 60, INC.

1. This opinion contains indications relating to the following items:

- [x] Box No. I Basis of the opinion
- [ ] Box No. II Priority
- [ ] Box No. III Non-establishment of opinion with regard to novelty, inventive step and industrial applicability
- [ ] Box No. IV Lack of unity of invention
- [x] Box No. V Reasoned statement under Rule 43*bis*.1(a)(i) with regard to novelty, inventive step or industrial applicability; citations and explanations supporting such statement
- [ ] Box No. VI Certain documents cited
- [ ] Box No. VII Certain defects in the international application
- [ ] Box No. VIII Certain observations on the international application

2. **FURTHER ACTION**

If a demand for international preliminary examination is made, this opinion will be considered to be a written opinion of the International Preliminary Examining Authority ("IPEA") except that this does not apply where the applicant chooses an Authority other than this one to be the IPEA and the chosen IPEA has notified the International Bureau under Rule 66.1*bis*(b) that written opinions of this International Searching Authority will not be so considered.

If this opinion is, as provided above, considered to be a written opinion of the IPEA, the applicant is invited to submit to the IPEA a written reply together, where appropriate, with amendments, before the expiration of 3 months from the date of mailing of Form PCT/ISA/220 or before the expiration of 22 months from the priority date, whichever expires later.

For further options, see Form PCT/ISA/220.

3. For further details, see notes to Form PCT/ISA/220.

Name and mailing address of the ISA/US	Date of completion of this opinion	Authorized officer:
Mail Stop PCT, Attn: ISA/US Commissioner for Patents P.O. Box 1450, Alexandria, Virginia 22313-1450 Facsimile No. 571-273-3201	30 September 2008 (30.09.2008)	Lee W. Young PCT Helpdesk: 571-272-4300 PCT OSP: 571-272-7774

Form PCT/ISA/237 (cover sheet) (April 2007)

WRITTEN OPINION OF THE INTERNATIONAL SEARCHING AUTHORITY

International application No.
PCT/US 08/68250

Box No. I Basis of this opinion

1. With regard to the **language**, this opinion has been established on the basis of:
   - [X] the international application in the language in which it was filed.
   - [ ] a translation of the international application into _____ which is the language of a translation furnished for the purposes of international search (Rules 12.3(a) and 23.1(b)).

2. [ ] This opinion has been established taking into account the **rectification of an obvious mistake** authorized by or notified to this Authority under Rule 91 (Rule 43*bis*.1(a))

3. With regard to any **nucleotide and/or amino acid sequence** disclosed in the international application, this opinion has been established on the basis of:
   a. type of material
      - [ ] a sequence listing
      - [ ] table(s) related to the sequence listing

   b. format of material
      - [ ] on paper
      - [ ] in electronic form

   c. time of filing/furnishing
      - [ ] contained in the international application as filed
      - [ ] filed together with the international application in electronic form
      - [ ] furnished subsequently to this Authority for the purposes of search

4. [ ] In addition, in the case that more than one version or copy of a sequence listing and/or table(s) relating thereto has been filed or furnished, the required statements that the information in the subsequent or additional copies is identical to that in the application as filed or does not go beyond the application as filed, as appropriate, were furnished.

5. Additional comments:

WRITTEN OPINION OF THE INTERNATIONAL SEARCHING AUTHORITY

International application No.
PCT/US 08/68250

Box No. V **Reasoned statement under Rule 43*bis*.1(a)(i) with regard to novelty, inventive step or industrial applicability; citations and explanations supporting such statement**

1. Statement

Novelty (N)	Claims	27-31	YES
	Claims	1-26	NO
Inventive step (IS)	Claims	None.	YES
	Claims	1-31	NO
Industrial applicability (IA)	Claims	1-31	YES
	Claims	None.	NO

2. Citations and explanations:

Claims 1-26 lack novelty under PCT Article 33(2) as being anticipated by US 2004/0049419 A1 (Knight).

As per claim 1, Knight discloses mobile communication device that provides updated content associated with a mobile video game (abstract, fig 1), comprising: a screen for viewing by the user (fig 1, para [0026]); a processor (fig 1, para [0026]); and a memory containing instructions that, when executed by the processor (fig 1, para [0026]), cause the communications device to: contact a server (para [0026]); check for updated content for use in the mobile video game (fig 4, para [0029]); download the updated content to the mobile communication device from the server (fig 1, para [0022], [0023]); and display the updated content within the video game, the video game being presented on the screen (fig 1, para [0017], [0045]).

As per claim 2, Knight discloses the updated content is promotional content (abstract).

As per claim 3, Knight discloses the promotional content is pre-selected for the mobile communication device based upon a telecom service associated with the mobile communication device (para [0018]).

As per claim 4, Knight discloses the content is displayed within the mobile video game at a location on the screen based on user interaction with the mobile communication device (para [0019], [0022]).

As per claim 5, Knight discloses checking for updated content is performed upon a request by a user of the mobile communication device (para [0027]).

As per claim 6, Knight discloses checking for updated content is performed periodically (fig 4, para [0029], [0043]).

As per claim 7, Knight discloses the instructions further allow the mobile communication device to receive an initial message from the server prior to downloading the updated content (fig 4, para [0029]).

As per claim 8, Knight discloses the initial message contains information that is displayed to the user on the screen (fig 4, para [0029], [0043]).

As per claim 9, Knight discloses the promotional content is pre-selected for the mobile communication device based upon a telecom service associated with the mobile communication device (para [0018]).

As per claim 10, Knight discloses the communications device sends a follow-up request to the server indicating that the user wishes to download the updated content from the server (fig 4, para [0029], [0043]); and the communications device downloads the updated content after sending the follow-up request (fig 4, para [0029], [0043]).

As per claim 11, Knight discloses the instructions further cause the mobile communication device to check whether the updated content should be downloaded before downloading the updated content from the server (para [0031]).

As per claim 12, Knight discloses a computer-readable medium containing instructions for execution by a mobile communication device, the instructions causing the mobile communication device to perform a method that provides updated content associated with a mobile video game (abstract), the method comprising the steps of: contacting a server (para [0007]); checking for updated content for use in the video game (fig 4, para [0029]); downloading the updated content to the communications device (fig 1, para [0022], [0023]); and displaying the updated content within the video game, the video game being presented within a screen controlled by the mobile communication device (fig 1, para [0017]).

As per claim 13, Knight discloses the updated content is promotional content (abstract).

As per claim 14, Knight discloses the promotional content is pre-selected for the mobile communication device based upon a telecom service associated with the mobile communication device (para [0018]).

----Please See Continuation Sheet----

WRITTEN OPINION OF THE INTERNATIONAL SEARCHING AUTHORITY

International application No.
PCT/US 08/68250

Supplemental Box

In case the space in any of the preceding boxes is not sufficient.
Continuation of:
Box V. 2. Citations and explanations

As per claim 15, Knight discloses a method for providing updated content to a mobile communication device for use in a mobile video game (abstract), the method comprising the steps of: receiving a request for the updated content from the mobile communication device (fig 1 para [0017], [0045]), the updated content being usable in the video-game that already exists on the mobile communication device (fig 1, para [0017], [0045]); checking what updated content to send based on one of the factors including a type of the mobile communication device (fig 4, para [0029]), a telecom service associated with the mobile communication device, and a service provider of the telecom service (para [0002], [0003]); and uploading updated content to the communications device, the content being usable when the video game operates on the communications device (fig 1, para [0022], [0023]).

As per claim 16, Knight discloses the updated content is promotional content (abstract).

As per claim 17, Knight discloses the step of checking whether the communications device should receive the updated content before uploading the updated content to the communications device (para [0031]).

As per claim 18, Knight discloses the step of sending information to the mobile communication device as part of the updated content, the information providing an in-game placement location associated with the updated content (para [0029], [0045]).

As per claim 19, Knight discloses the step of tracking what has been uploaded to the mobile communication device (para [0029], [0031]).

As per claim 20, Knight discloses a system for providing updated content associated with of a mobile video game to a mobile communication device (abstract, fig 1), the system comprising: a storage medium for storing pre-selected content for use in a video game (fig 1); a server in communication with the storage medium (fig 1); and an interface coupled to the server and a network, wherein the interface receives a request for updated content from the mobile communication device over the network (para [0004], [0027], [0029]); wherein the server is operative to receive the request through the interface and utilize the request to (para [0027], [0029]): check what pre-selected content to send (para [0031]); and send the pre-selected content stored on the storage medium to the mobile communication device as the updated content for the mobile video game (para [0018]).

As per claim 21, Knight discloses the updated content is promotional content (abstract).

As per claim 22, Knight discloses the server sends information to the mobile communication device regarding the in-game placement location of the content, the information being part of the updated content (para [0029], [0045]).

As per claim 23, Knight discloses the server sends a message to the mobile communication device in response to receiving the request, the message relating to the content (para [0027], [0031]).

As per claim 24, Knight discloses the message is pre-selected by the server based on a model type associated with the communications device, a service subscription associated with the communications device, or a service provider for the service subscription associated with the communications device (para [0018]).

As per claim 25, Knight discloses the server checks whether the mobile communication device should receive the updated content before sending the updated content to the communications device (para [0031]).

As per claim 26, Knight discloses the server tracks the distribution of updated content (para [0036]).

Claims 27-29, and 31 lack an inventive step under PCT Article 33(3) as being obvious over Knight in view of US 2003/0105669 A1 Tsuchiya.

As per claim 27, Knight teaches receiving a request for updated content from the mobile communication device (para [0031], [0027]); and uploading the updated content to the mobile communication device, the updated content being displayable within the mobile video game (para [0029], [0031]).
Knight fails to teach a method for selling promotional content in a mobile video game for use on a mobile communications device, comprising the steps of: associating updated content with a third party in exchange for payment from the third party.
Tsuchiya teaches a method for selling promotional content in a mobile video game for use on a mobile communications device (abstract, para [0248]), comprising the steps of: associating updated content with a third party in exchange for payment from the third party (para [0019]-[0022]).
It would have been obvious to one of ordinary skill in the art to have combined Knight advertising on an interact screensaver with Tsuchiya contents distributing system, device for processing charge with the motivation that this would provide a method for increasing revenue by targeting advertisement to targeted customers, and by allowing customers to write rating reviews.

As per claim 28, Tsuchiya teaches the payment is based on the number of times that the updated content is uploaded (para [0019]-[0022]).

As per claim 31, Tsuchiya teaches payment is based on the length of time the updated content is available for download (para [0156]).

---Please See Continuation Sheet---

WRITTEN OPINION OF THE
INTERNATIONAL SEARCHING AUTHORITY

International application No.
PCT/US 08/68250

Supplemental Box

In case the space in any of the preceding boxes is not sufficient.
Continuation of:
Box V. 2. Citations and explanations

Claims 29, and 30 lack an inventive step under PCT Article 33(3) as being obvious over Knight as modified by Tsuchiya in view of US 6,219,696 B1 Wynblatt et al. (hereafter Wynblatt).

As per claim 29, Knight as modified by Tsuchiya fail to teach the updated content is pre-selected based on the proximity of the mobile communications device to a physical location associated with the third party.
Wynblatt teaches the updated content is pre-selected based on the proximity of the mobile communications device to a physical location associated with the third party (col 5 ln 60-67, col 6 ln 1-10).
It would have been obvious to one of ordinary skill in the art to have combined Knight advertising on an interact screensaver as modified by Tsuchiya contents distributing system, device for processing charge with Slaughter system for providing targeted internet information to mobile agents the motivation that this system will generate greater revenue since customers can learn of promotions at a store they may pass by or enter and be motivated to purchase a promoted item.

As per claim 30, Wynblatt teaches the request is received in response to a change in the proximity of the mobile communications device to the location associated with the third party (col 5 ln 60-67, col 6 ln 1-10).

Claim 1-31 have industrial applicability as defined by PCT Article 33(4), because the subject matter can be made or used in industry.

PATENT COOPERATION TREATY

From the INTERNATIONAL BUREAU

PCT

NOTIFICATION CONCERNING TRANSMITTAL OF COPY OF INTERNATIONAL PRELIMINARY REPORT ON PATENTABILITY (CHAPTER I OF THE PATENT COOPERATION TREATY)
(PCT Rule 44bis.1(c))

To: CBH|FLB|RCS|BZM

STANLEY, Robert, C.
Finnegan, Henderson, Farabow
Garrett & Dunner, L.L.P.
901 New York Avenue, N.W.
Washington, DC 20001
ETATS-UNIS D'AMERIQUE

Date of mailing *(day/month/year)* 14 January 2010 (14.01.2010)		
Applicant's or agent's file reference 9685.44-304	IMPORTANT NOTICE	
International application No. PCT/US2008/068249	International filing date *(day/month/year)* 25 June 2008 (25.06.2008)	Priority date *(day/month/year)* 26 June 2007 (26.06.2007)
Applicant GOSUB 60, INC et al		

The International Bureau transmits herewith a copy of the international preliminary report on patentability (Chapter I of the Patent Cooperation Treaty)

ABANDON PER CL.

The International Bureau of WIPO 34, chemin des Colombettes 1211 Geneva 20, Switzerland Facsimile No. +41 22 338 82 70	Authorized officer Athina Nickitas-Etienne 2/2/10 e-mail: pt04.pct@wipo.int

Form PCT/IB/326 (January 2004)

A. Thompson

PATENT COOPERATION TREA'.

PCT

INTERNATIONAL PRELIMINARY REPORT ON PATENTABILITY

(Chapter I of the Patent Cooperation Treaty)

(PCT Rule 44*bis*)

Applicant's or agent's file reference 9685.44-304	**FOR FURTHER ACTION**	See item 4 below
International application No. PCT/US2008/068249	International filing date *(day/month/year)* 25 June 2008 (25.06.2008)	Priority date *(day/month/year)* 26 June 2007 (26.06.2007)
International Patent Classification (8th edition unless older edition indicated) See relevant information in Form PCT/ISA/237		
Applicant GOSUB 60, INC		

1. This international preliminary report on patentability (Chapter I) is issued by the International Bureau on behalf of the International Searching Authority under Rule 44 *bis*.1(a).

2. This REPORT consists of a total of 5 sheets, including this cover sheet.

   In the attached sheets, any reference to the written opinion of the International Searching Authority should be read as a reference to the international preliminary report on patentability (Chapter I) instead.

3. This report contains indications relating to the following items:

☒	Box No. I	Basis of the report
☐	Box No. II	Priority
☐	Box No. III	Non-establishment of opinion with regard to novelty, inventive step and industrial applicability
☐	Box No. IV	Lack of unity of invention
☒	Box No. V	Reasoned statement under Article 35(2) with regard to novelty, inventive step or industrial applicability; citations and explanations supporting such statement
☐	Box No. VI	Certain documents cited
☐	Box No. VII	Certain defects in the international application
☐	Box No. VIII	Certain observations on the international application

4. The International Bureau will communicate this report to designated Offices in accordance with Rules 44*bis*.3(c) and 93*bis*.1 but not, except where the applicant makes an express request under Article 23(2), before the expiration of 30 months from the priority date (Rule 44*bis* .2).

	Date of issuance of this report 05 January 2010 (05.01.2010)
The International Bureau of WIPO 34, chemin des Colombettes 1211 Geneva 20, Switzerland Facsimile No. +41 22 338 82 70	Authorized officer Athina Nickitas-Etienne e-mail: pt04.pct@wipo.int

Form PCT/IB/373 (January 2004)

PATENT COOPERATION TREATY

From the
INTERNATIONAL SEARCHING AUTHORITY

To:
ROBERT C. STANLEY
FINNEGAN, HENDERSON, FARABOW,
GARRETT & DUNNER, LLP
901 NEW YORK AVENUE, N.W.
WASHINGTON, DC 20001

PCT

WRITTEN OPINION OF THE
INTERNATIONAL SEARCHING AUTHORITY

(PCT Rule 43*bis*.1)

Date of mailing *(day/month/year)*	29 AUG 2008
Applicant's or agent's file reference 9685.44-304	**FOR FURTHER ACTION** See paragraph 2 below

International application No.	International filing date *(day/month/year)*	Priority date *(day/month/year)*
PCT/US 08/68249	25 June 2008 (25.06.2008)	26 June 2007 (26.06.2007)

International Patent Classification (IPC) or both national classification and IPC
IPC(8) - A63F 9/24 (2008.04)
USPC - 463/42

Applicant GOSUB 60, INC

1. This opinion contains indications relating to the following items:

- [x] Box No. I Basis of the opinion
- [ ] Box No. II Priority
- [ ] Box No. III Non-establishment of opinion with regard to novelty, inventive step and industrial applicability
- [ ] Box No. IV Lack of unity of invention
- [x] Box No. V Reasoned statement under Rule 43*bis*.1(a)(i) with regard to novelty, inventive step or industrial applicability; citations and explanations supporting such statement
- [ ] Box No. VI Certain documents cited
- [ ] Box No. VII Certain defects in the international application
- [ ] Box No. VIII Certain observations on the international application

2. **FURTHER ACTION**

If a demand for international preliminary examination is made, this opinion will be considered to be a written opinion of the International Preliminary Examining Authority ("IPEA") except that this does not apply where the applicant chooses an Authority other than this one to be the IPEA and the chosen IPEA has notified the International Bureau under Rule 66.1*bis*(b) that written opinions of this International Searching Authority will not be so considered.

If this opinion is, as provided above, considered to be a written opinion of the IPEA, the applicant is invited to submit to the IPEA a written reply together, where appropriate, with amendments, before the expiration of 3 months from the date of mailing of Form PCT/ISA/220 or before the expiration of 22 months from the priority date, whichever expires later.

For further options, see Form PCT/ISA/220.

3. For further details, see notes to Form PCT/ISA/220.

Name and mailing address of the ISA/US	Date of completion of this opinion	Authorized officer:
Mail Stop PCT, Attn: ISA/US Commissioner for Patents P.O. Box 1450, Alexandria, Virginia 22313-1450 Facsimile No. 571-273-3201	25 August 2008 (25.08.2008)	Lee W. Young PCT Helpdesk: 571-272-4300 PCT OSP: 571-272-7774

Form PCT/ISA/237 (cover sheet) (April 2007)

WRITTEN OPINION OF THE INTERNATIONAL SEARCHING AUTHORITY

International application No.
PCT/US 08/68249

Box No. I **Basis of this opinion**

1. With regard to the **language**, this opinion has been established on the basis of:
   - [X] the international application in the language in which it was filed.
   - [ ] a translation of the international application into _____ which is the language of a translation furnished for the purposes of international search (Rules 12.3(a) and 23.1(b)).

2. [ ] This opinion has been established taking into account the **rectification of an obvious mistake** authorized by or notified to this Authority under Rule 91 (Rule 43*bis*.1(a))

3. With regard to any **nucleotide and/or amino acid sequence** disclosed in the international application, this opinion has been established on the basis of:
   a. type of material
      - [ ] a sequence listing
      - [ ] table(s) related to the sequence listing

   b. format of material
      - [ ] on paper
      - [ ] in electronic form

   c. time of filing/furnishing
      - [ ] contained in the international application as filed
      - [ ] filed together with the international application in electronic form
      - [ ] furnished subsequently to this Authority for the purposes of search

4. [ ] In addition, in the case that more than one version or copy of a sequence listing and/or table(s) relating thereto has been filed or furnished, the required statements that the information in the subsequent or additional copies is identical to that in the application as filed or does not go beyond the application as filed, as appropriate, were furnished.

5. Additional comments:

WRITTEN OPINION OF THE INTERNATIONAL SEARCHING AUTHORITY

International application No.
PCT/US 08/68249

Box No. V **Reasoned statement under Rule 43*bis*.1(a)(i) with regard to novelty, inventive step or industrial applicability; citations and explanations supporting such statement**

1. Statement

Novelty (N)	Claims	None.	YES
	Claims	1 - 27	NO
Inventive step (IS)	Claims	None.	YES
	Claims	1 - 27	NO
Industrial applicability (IA)	Claims	1 - 27	YES
	Claims	None.	NO

2. Citations and explanations:

Claims 1 - 27 lack novelty under PCT Article 33(2) as being anticipated by US 2003/0224855 A1 (Cunningham).

Regarding claim 1, Cunningham discloses a mobile communication device that provides a hot spot associated with a mobile video game, comprising: a screen (liquid-crystal display (LCD) 405, para [0050], Fig. 4) for viewing by a user; a processor (microprocessor 525, para [0055], Fig. 5) in communication with the screen; an input device (user input interface 520, para [0055], Fig. 5) in communication with the processor; and a memory (storage, para [0034]) containing instructions that, when executed by the processor, cause the mobile communication device to: designate a location (point in virtual space, para [0060]) in-game for activating the hot spot; detect activation (interactive virtual space, para [0007]) of the hot spot during operation of the mobile video game; and display content on the screen (liquid-crystal display (LCD) 405, para [0050], Fig. 4) when the user activates the hot spot, the content being promotional or game-enhancing in nature (advertising and promotion, para [0041]).

Regarding claim 2, Cunningham discloses the mobile communication device of claim 1, wherein the instructions further cause the mobile communication device to: contact a server (game server 70, para [0039], Fig. 1) to check for hot spot information; and download the hot spot information to the communications device from the server (database 75, para [0039], Fig. 1).

Regarding claim 3, Cunningham discloses the mobile communication device of claim 1, wherein the hot spot information includes coordinate information used to designate the location for activating the hot spot (GPS (Global Positioning System), para [0044]) .

Regarding claim 4, Cunningham discloses the mobile communication device of claim 1, wherein the designated location is an item that is displayed on the screen as part of a gaming environment of the mobile video game (Game-board portion 412, para [0054], Fig. 4) .

Regarding claim 5, Cunningham discloses the mobile communication device of claim 1, wherein the content is a message (the message being delivered through video, audio, text, a picture, or a combination thereof graphic images and pictures, para [0050]).

Regarding claim 6, Cunningham discloses the mobile communication device of claim 5, wherein the message includes a hint related to the mobile video game (hidden object, para [0008]) .

Regarding claim 7, Cunningham discloses the mobile communication device of claim 1, wherein the instructions further cause the mobile communication device to update the hot spot information periodically by contacting the server again (periodic updates, para [0060]).

Regarding claim 8, Cunningham discloses the mobile communication device of claim 1, wherein activation occurs when the user manipulates the hot spot location (interactive virtual space, para [0007]).

Regarding claim 9, Cunningham discloses a computer-readable medium (memory, Fig. 5) containing instructions for execution by a mobile communication device, the instructions causing the mobile communication device to perform a method for providing a hot spot associated with a mobile video game comprising the steps of: designating a location in-game for activating the hot spot (point in virtual space, para [0060]); detecting activation of the hot spot during operation of the mobile video game; and displaying content on the screen (liquid-crystal display (LCD) 405, para [0050], Fig. 4) when a user activates the hot spot, the content being promotional in nature (advertising and promotion, para [0041]).

Regarding claim 10, Cunningham discloses the computer-readable medium (memory, Fig. 5) of claim 9, wherein the instructions further cause the mobile communication device to: contact a server to check for hot spot information; and download the hot spot information to the communications device from the server (game server 70, para [0039], Fig. 1).

Regarding claim 11, Cunningham discloses the computer-readable medium (memory, Fig. 5) of claim 9, wherein the designated location for activating the hot spot is an item that is displayed in-game on a screen of the mobile communication device (liquid-crystal display (LCD) 405, para [0050], Fig. 4).

Regarding claim 12, Cunningham discloses the computer-readable medium (memory, Fig. 5) of claim 9, wherein the content includes a hint related to the mobile video game (hidden object, para [0008]) .

See continuation sheet.

WRITTEN OPINION OF THE INTERNATIONAL SEARCHING AUTHORITY

International application No.
PCT/US 08/68249

Supplemental Box

In case the space in any of the preceding boxes is not sufficient.
Continuation of:

Box V.2. Citations and explanations:

Regarding claim 13, Cunningham discloses the computer-readable medium (memory, Fig. 5) of claim 9, wherein the instructions further cause the mobile communication device to update the hot spot information periodically by contacting the server again (periodic updates, para [0060]).

Regarding claim 14, Cunningham discloses the computer-readable medium (memory, Fig. 5) of claim 9, wherein activation occurs when the user manipulates the hot spot location (interactive virtual space, para [0007]).

Regarding claim 15, Cunningham discloses a method for providing a hot spot associated with a mobile video game, the mobile video game being operable on a mobile communication device, the method comprising the steps of: storing hot spot information (Game server 70 uses game database, para [0039], Fig. 1) on a computer-readable medium (memory, Fig. 5); receiving a communication (communicate with an MGS and with a game server, para [0056], Fig. 6) from a mobile communication device; determining the hot spot information to provide to the mobile device based upon the request, the hot spot information including hidden content for presenting to the user when the hot spot is activated; and uploading the hot spot information to the mobile communication device (hidden object, para [0008]).

Regarding claim 16, Cunningham discloses the method of claim 15, wherein the hot spot information designates a location for activating the hot spot within a gaming environment of the mobile video game (location-based positioning services, para [0053]).

Regarding claim 17, Cunningham discloses the method of claim 16, wherein the designated location is an item that is displayed within a gaming environment of the mobile video game (artificially-created set of elements, para [0003]).

Regarding claim 18, Cunningham discloses the method of claim 15, wherein the content is promotional in nature (advertising and promotion, para [0041]).

Regarding claim 19, Cunningham discloses the method of claim 18, wherein the content that is promotional in nature (advertising and promotion, para [0041]) is pre-selected based on the proximity of the mobile communication device to a physical location related to the promotional content (shopping mall 60 or similar environments, para [0041], Fig. 1).

Regarding claim 20, Cunningham discloses the method of claim 15, further comprising the step of tracking what hot spot information has been downloaded to the mobile communication device (track consumer traffic, para [0041]).

Regarding claim 21, Cunningham discloses the method of claim 20, wherein the tracked hot spot information is used for billing a third party associated with the hot spot information (additional revenue, para [0026]) .

Regarding claim 22, Cunningham discloses a system for providing a hot spot associated with a mobile video game, the system comprising: a storage medium for storing hot spot information (Game server 70 uses game database, para [0039], Fig. 1) for use in the mobile video game; a server in communication with the storage medium; an interface coupled to the server and a network, wherein the interface receives a request for hot spot information from the mobile communication device over the network; wherein the server is operative to receive the request through the interface and utilize the request to determine the hot spot information for the mobile video game, and send the hot spot information to the mobile communication device (game server 70, para [0039], Fig. 1), the hot spot information designating a location in-game as associated with activating the hot spot within a gaming environment of the mobile video game (point in virtual space, para [0060]).

Regarding claim 23, Cunningham discloses the system of claim 22, wherein the hot spot includes hidden content that is promotional in nature (hidden object, para [0008]).

Regarding claim 24, Cunningham discloses the method of claim 22, wherein the content that is promotional in nature (advertising and promotion, para [0041]) is pre-selected based on the proximity of the mobile communication device to a physical location related to the promotional content (shopping mall 60 or similar environments, para [0041], Fig. 1).

Regarding claim 25, Cunningham discloses the system of claim 22, wherein the hot spot information is pre-selected by the server based on a model type associated with the communications device, a service subscription associated with the communications device, or a service provider for the service subscription associated with the communications device (various communicating electronic devices, para [0005]).

Regarding claim 26, Cunningham discloses the system of claim 22, wherein the server tracks what hot spot information has been downloaded (track consumer traffic, para [0041]).

Regarding claim 27, Cunningham discloses the method of claim 26, wherein the tracked hot spot information is used for billing a third party associated with the hot spot information (additional revenue, para [0026]) .

Claims 1 - 27 have industrial applicability as defined by PCT Article 33(4) because the subject matter can be made or used in industry.

Electronic Acknowledgement Receipt

EFS ID:	7183418
Application Number:	11768892
International Application Number:	
Confirmation Number:	3817
Title of Invention:	Methods and Systems for Updating In-Game Content
First Named Inventor/Applicant Name:	Joshua Hartwell
Customer Number:	22852
Filer:	Brannon Charles McKay/Cecelia Dickerson
Filer Authorized By:	Brannon Charles McKay
Attorney Docket Number:	09685.0045-00000
Receipt Date:	10-MAR-2010
Filing Date:	26-JUN-2007
Time Stamp:	17:36:38
Application Type:	Utility under 35 USC 111(a)

Payment information:

Submitted with Payment	no

File Listing:

Document Number	Document Description	File Name	File Size(Bytes)/ Message Digest	Multi Part /.zip	Pages (if appl.)
1	Transmittal Letter	SUPPIDS45.PDF	52715 202e644d67eb1e0adcbca42404ca465dbe060ae6	no	2

Warnings:

Information:

2	Information Disclosure Statement (IDS) Filed (SB/08)	IDSFORM45.PDF	41145 df2163ab084e53e1a857068cd271ea66cad33ada	no	1
Warnings:					
Information:					
This is not an USPTO supplied IDS fillable form					
3	NPL Documents	PCT45.PDF	283365 3f9f8f5a2fdb50ff587117d906accb193693c9d9	no	7
Warnings:					
Information:					
4	NPL Documents	PCT44.PDF	268470 3c51534534d127b7d752c57833ceace7ce96464e	no	6
Warnings:					
Information:					
		Total Files Size (in bytes):	645695		

This Acknowledgement Receipt evidences receipt on the noted date by the USPTO of the indicated documents, characterized by the applicant, and including page counts, where applicable. It serves as evidence of receipt similar to a Post Card, as described in MPEP 503.

<u>New Applications Under 35 U.S.C. 111</u>
If a new application is being filed and the application includes the necessary components for a filing date (see 37 CFR 1.53(b)-(d) and MPEP 506), a Filing Receipt (37 CFR 1.54) will be issued in due course and the date shown on this Acknowledgement Receipt will establish the filing date of the application.

<u>National Stage of an International Application under 35 U.S.C. 371</u>
If a timely submission to enter the national stage of an international application is compliant with the conditions of 35 U.S.C. 371 and other applicable requirements a Form PCT/DO/EO/903 indicating acceptance of the application as a national stage submission under 35 U.S.C. 371 will be issued in addition to the Filing Receipt, in due course.

<u>New International Application Filed with the USPTO as a Receiving Office</u>
If a new international application is being filed and the international application includes the necessary components for an international filing date (see PCT Article 11 and MPEP 1810), a Notification of the International Application Number and of the International Filing Date (Form PCT/RO/105) will be issued in due course, subject to prescriptions concerning national security, and the date shown on this Acknowledgement Receipt will establish the international filing date of the application.

PATENT
Attorney Docket No. 09685.0045-00000

IN THE UNITED STATES PATENT AND TRADEMARK OFFICE

In re Application of:	)
	)
Joshua HARTWELL	) Group Art Unit: 2618
	)
Application No.: 11/768,892	) Examiner: Not Yet Assigned
	)
Filed: June 26, 2007	)
	)
For: METHODS AND SYSTEMS FOR UPDATING IN-GAME CONTENT	) Confirmation No.: 3817
	)

Commissioner for Patents
P.O. Box 1450
Alexandria, VA 22313-1450

Sir:

SUPPLEMENTAL INFORMATION DISCLOSURE STATEMENT

UNDER 37 C.F.R. § 1.97(b)

Pursuant to 37 C.F.R. §§ 1.56 and 1.97(b), Applicant brings to the attention of the Examiner the listed documents on the attached PTO SB/08 Form. This Information Disclosure Statement is being filed before the mailing date of a first Office Action on the merits for the above-referenced application.

Copies of the listed foreign and non-patent literature documents are attached.

Applicant respectfully requests that the Examiner consider the listed documents and indicate that they were considered by making appropriate notations on the attached form.

This submission does not represent that a search has been made or that no better art exists and does not constitute an admission that each or all of the listed documents are material or constitute "prior art." If the Examiner applies any of the

documents as prior art against any claim in the application and Applicant determines that the cited document does not constitute "prior art" under United States law, Applicant reserves the right to present to the U.S. Patent and Trademark Office the relevant facts and law regarding the appropriate status of such documents.

Applicant further reserves the right to take appropriate action to establish the patentability of the disclosed invention over the listed documents, should one or more of the documents be applied against the claims of the present application.

If there is any fee due in connection with the filing of this Statement, please charge the fee to Deposit Account 06-0916.

Respectfully submitted,

FINNEGAN, HENDERSON, FARABOW,
GARRETT & DUNNER, L.L.P.

Dated: March 10, 2010

By: /Brannon C. McKay/

Brannon C. McKay
Reg. No. 57,491
(404) 653-6410

UNITED STATES PATENT AND TRADEMARK OFFICE

UNITED STATES DEPARTMENT OF COMMERCE
United States Patent and Trademark Office
Address: COMMISSIONER FOR PATENTS
P.O. Box 1450
Alexandria, Virginia 22313-1450
www.uspto.gov

APPLICATION NUMBER	FILING OR 371(C) DATE	FIRST NAMED APPLICANT	ATTY. DOCKET NO./TITLE
11/768,892	06/26/2007	Joshua Hartwell	09685.0045-00000

CONFIRMATION NO. 3817

PUBLICATION NOTICE

OC000000033880250

22852
FINNEGAN, HENDERSON, FARABOW, GARRETT & DUNNER LLP
901 NEW YORK AVENUE, NW
WASHINGTON, DC 20001-4413

Title: Methods and Systems for Updating In-Game Content

Publication No.US-2009-0007186-A1
Publication Date:01/01/2009

NOTICE OF PUBLICATION OF APPLICATION

The above-identified application will be electronically published as a patent application publication pursuant to 37 CFR 1.211, et seq. The patent application publication number and publication date are set forth above.

The publication may be accessed through the USPTO's publically available Searchable Databases via the Internet at www.uspto.gov. The direct link to access the publication is currently http://www.uspto.gov/patft/.

The publication process established by the Office does not provide for mailing a copy of the publication to applicant. A copy of the publication may be obtained from the Office upon payment of the appropriate fee set forth in 37 CFR 1.19(a)(1). Orders for copies of patent application publications are handled by the USPTO's Office of Public Records. The Office of Public Records can be reached by telephone at (703) 308-9726 or (800) 972-6382, by facsimile at (703) 305-8759, by mail addressed to the United States Patent and Trademark Office, Office of Public Records, Alexandria, VA 22313-1450 or via the Internet.

In addition, information on the status of the application, including the mailing date of Office actions and the dates of receipt of correspondence filed in the Office, may also be accessed via the Internet through the Patent Electronic Business Center at www.uspto.gov using the public side of the Patent Application Information and Retrieval (PAIR) system. The direct link to access this status information is currently http://pair.uspto.gov/. Prior to publication, such status information is confidential and may only be obtained by applicant using the private side of PAIR.

Further assistance in electronically accessing the publication, or about PAIR, is available by calling the Patent Electronic Business Center at 1-866-217-9197.

Office of Data Managment, Application Assistance Unit (571) 272-4000, or (571) 272-4200, or 1-888-786-0101

DEC 05 2008
PATENT & TRADEMARK OFFICE

PATENT
Attorney Docket No. 09685.0045-00000

IN THE UNITED STATES PATENT AND TRADEMARK OFFICE

In re Application of:	
Joshua Hartwell	Group Art Unit: 2617
Application No.: 11/768,892	Examiner: N/A
Filed: June 26, 2007	
For: METHODS AND SYSTEMS FOR UPDATING IN-GAME CONTENT	Confirmation No.: 3817

Commissioner for Patents
P.O. Box 1450
Alexandria, VA 22313-1450

Sir:

INFORMATION DISCLOSURE STATEMENT UNDER 37 C.F.R. § 1.97(b)

Pursuant to 37 C.F.R. §§ 1.56 and 1.97(b), Applicant brings to the attention of the Examiner the listed document on the attached PTO SB/08 Form. This Information Disclosure Statement is being filed before the mailing date of a first Office Action on the merits for the above-referenced application.

Copies of the listed foreign and non-patent literature documents are attached. Copies of the U.S. patent publications are not enclosed.

Applicant respectfully requests that the Examiner consider the listed document and indicate that it was considered by making appropriate notations on the attached form.

This submission does not represent that a search has been made or that no better art exists and does not constitute an admission that the listed document is

material or constitutes "prior art." If the Examiner applies the document as prior art against any claim in the application and Applicant determines that the document does not constitute "prior art" under United States law, Applicant reserves the right to present to the U.S. Patent and Trademark Office the relevant facts and law regarding the appropriate status of the document.

Applicant further reserves the right to take appropriate action to establish the patentability of the disclosed invention over the listed document, should one or more of the documents be applied against the claims of the present application.

If there is any fee due in connection with the filing of this Statement, please charge the fee to Deposit Account 06-0916.

Respectfully submitted,

FINNEGAN, HENDERSON, FARABOW,
GARRETT & DUNNER, L.L.P.

Dated: December 5, 2008

By: _____
Brannon C. McKay
Reg. No. 57,491
(404) 653-6410

IDS Form PTO/SB/08: Substitute for form 1449A/PTO	Complete if Known	
INFORMATION DISCLOSURE STATEMENT BY APPLICANT	*Application Number*	11/768,892
	Filing Date	June 26, 2007
	First Named Inventor	Joshua Hartwell
	Art Unit	2617
(Use as many sheets as necessary)	*Examiner Name*	N/A
Sheet 1 of 2	*Attorney Docket Number*	09685.0045-00000

DEC 05 2008 PATENT & TRADEMARK OFFICE

U.S. PATENTS AND PUBLISHED U.S. PATENT APPLICATIONS

Examiner Initials*	Cite No.[1]	Document Number Number-Kind Code[2] *(if known)*	Issue or Publication Date MM-DD-YYYY	Name of Patentee or Applicant of Cited Document	Pages, Columns, Lines, Where Relevant Passages or Relevant Figures Appear
		US-2002/0166119 A1	11-07-2002	Cristofalo	
		US-2003/0224855 A1	12-04-2003	Cunningham	
		US-2006/0136297 A1	06-22-2006	Willis et al.	
		US-2006/0128469 A1	06-15-2006	Willis et al.	
		US-2004/0049419 A1	03-11-2004	Knight	
		US-2003/0105669 A1	06-05-2003	Tsuchiya	
		US-6,219,696 B1	04/17/2001	Wynblatt et al.	
		US-2006/0130046 A1	06/15/2006	O'Neill	
		US-2005/0240476 A1	10-27-2005	Bigott	
		US-			
		US-			
		US-			

Note: Submission of copies of U.S. Patents and published U.S. Patent Applications is not required.

FOREIGN PATENT DOCUMENTS

Examiner Initials*	Cite No.[1]	Foreign Patent Document Country Code[3] Number[4] Kind Code[5] *(if known)*	Publication Date MM-DD-YYYY	Name of Patentee or Applicant of Cited Document	Pages, Columns, Lines, Where Relevant Passages or Relevant Figures Appear	Translation[6]

NONPATENT LITERATURE DOCUMENTS

Examiner Initials*	Cite No.[1]	Include name of the author (in CAPITAL LETTERS), title of the article (when appropriate), title of the item (book, magazine, journal, serial, symposium, catalog, etc.), date, page(s), volume-issue number(s), publisher, city and/or country where published.	Translation[6]
		International Search Report and The Written Opinion of the International Searching Authority, or the Declaration; International Application No. PCT/US 08/68249; International Filing Date June 25, 2008; 8 pgs.	
		International Search Report and The Written Opinion of the International Searching Authority, or the Declaration; International Application No. PCT/US 08/68250 International Filing Date June 25, 2008; 8 pgs.	

Examiner Signature		Date Considered	

EXAMINER: Initial if reference considered, whether or not citation is in conformance with MPEP 609. Draw line through citation if not in conformance and not considered. Include copy of this form with next communication to applicant.

PATENT
Attorney Docket No. 09685.0045-00000

IN THE UNITED STATES PATENT AND TRADEMARK OFFICE

In re Application of:	
Joshua Hartwell	Group Art Unit: 2617
Application No.: 11/768,892	Examiner: N/A
Filed: June 26, 2007	
For: METHODS AND SYSTEMS FOR UPDATING IN-GAME CONTENT	Confirmation No.: 3817

Commissioner for Patents
P.O. Box 1450
Alexandria, VA 22313-1450

Sir:

INFORMATION DISCLOSURE STATEMENT UNDER 37 C.F.R. § 1.97(b)

Pursuant to 37 C.F.R. §§ 1.56 and 1.97(b), Applicant brings to the attention of the Examiner the listed document on the attached PTO SB/08 Form. This Information Disclosure Statement is being filed within three months of the filing date of the above-referenced application.

Applicant respectfully requests that the Examiner consider the listed document and indicate that it was considered by making appropriate notations on the attached form.

This submission does not represent that a search has been made or that no better art exists and does not constitute an admission that the listed document is material or constitutes "prior art." If the Examiner applies the document as prior art against any claim in the application and Applicant determines that the document does

not constitute "prior art" under United States law, Applicant reserves the right to present to the U.S. Patent and Trademark Office the relevant facts and law regarding the appropriate status of the document.

Applicant further reserves the right to take appropriate action to establish the patentability of the disclosed invention over the listed document, should one or more of the documents be applied against the claims of the present application.

If there is any fee due in connection with the filing of this Statement, please charge the fee to Deposit Account 06-0916.

Respectfully submitted,

FINNEGAN, HENDERSON, FARABOW,
GARRETT & DUNNER, L.L.P.

Dated: September 25, 2007

By: _____
Brannon C. McKay
Reg. No. 57,491
(404) 653-6410

IDS Form PTO/SB/08: Substitute for form 1449A/PTO

INFORMATION DISCLOSURE STATEMENT BY APPLICANT

(Use as many sheets as necessary)

Sheet	1	of	1

Complete if Known	
Application Number	11/768,892
Filing Date	June 26, 2007
First Named Inventor	Joshua Hartwell
Art Unit	2617
Examiner Name	N/A
Attorney Docket Number	09685.0045-00000

U.S. PATENTS AND PUBLISHED U.S. PATENT APPLICATIONS

Examiner Initials*	Cite No.[1]	Document Number Number-Kind Code[2] *(if known)*	Issue or Publication Date MM-DD-YYYY	Name of Patentee or Applicant of Cited Document	Pages, Columns, Lines, Where Relevant Passages or Relevant Figures Appear
		US-2007/0022442 A1	01-25-2007	Gil et al.	p. 1, para. [0009]; p. 9, para. [0078].
		US-			
		US-			
		US-			
		US-			
		US-			
		US-			
		US-			
		US-			
		US-			
		US-			

Note: Submission of copies of U.S. Patents and published U.S. Patent Applications is not required.

FOREIGN PATENT DOCUMENTS

Examiner Initials*	Cite No.[1]	Foreign Patent Document Country Code[3] Number[4] Kind Code[5] *(if known)*	Publication Date MM-DD-YYYY	Name of Patentee or Applicant of Cited Document	Pages, Columns, Lines, Where Relevant Passages or Relevant Figures Appear	Translation[6]

NONPATENT LITERATURE DOCUMENTS

Examiner Initials*	Cite No.[1]	Include name of the author (in CAPITAL LETTERS), title of the article (when appropriate), title of the item (book, magazine, journal, serial, symposium, catalog, etc.), date, page(s), volume-issue number(s), publisher, city and/or country where published.	Translation[6]

Examiner Signature		Date Considered	

EXAMINER: Initial if reference considered, whether or not citation is in conformance with MPEP 609. Draw line through citation if not in conformance and not considered. Include copy of this form with next communication to applicant.

PTO Notes regarding this form:

[1] Applicant's unique citation designation number (optional).
[2] See Kinds Codes of USPTO Patent Documents at www.uspto.gov or MPEP 901.04.
[3] Enter Office that issued the document, by the two-letter code (WIPO Standard ST.3).
[4] For Japanese patent documents, the indication of the year of the reign of the Emperor must precede the serial number of the patent document.
[5] Kind of document by the appropriate symbols as indicated on the document under WIPO Standard ST.16 if possible.
[6] Applicant is to place a check mark here if English language Translation is attached.
This collection of information is required by 37 CFR 1.97 and 1.98. The information is required to obtain or retain a benefit by the public which is to file (and by the USPTO to process) an application. Confidentiality is governed by 35 U.S.C. 122 and CFR 1.14. This collection is estimated to take 2 hours to complete, including gathering, preparing, and submitting the completed application form to the USPTO. Time will vary depending upon the individual case. Any comments on the amount of time you require to complete this form and/or suggestions for reducing this burden, should be sent to the Chief Information Officer, U.S. Patent and Trademark Office, U.S. Department of Commerce, P.O. Box 1450, Alexandria, VA 22313-1450. DO NOT SEND FEES OR COMPLETED FORMS TO THIS ADDRESS. **SEND TO: Commissioner for Patents, P.O. Box 1450, Alexandria, VA 22313-1450.**

Electronic Acknowledgement Receipt

EFS ID:	2239839
Application Number:	11768892
International Application Number:	
Confirmation Number:	3817
Title of Invention:	Methods and Systems for Updating In-Game Content
First Named Inventor/Applicant Name:	Joshua Hartwell
Customer Number:	22852
Filer:	Brannon Charles McKay
Filer Authorized By:	
Attorney Docket Number:	09685.0045-00000
Receipt Date:	25-SEP-2007
Filing Date:	26-JUN-2007
Time Stamp:	17:13:56
Application Type:	Utility under 35 USC 111(a)

Payment information:

Submitted with Payment	no

File Listing:

Document Number	Document Description	File Name	File Size(Bytes) /Message Digest	Multi Part /.zip	Pages (if appl.)
1		IDS.PDF	124107 60fc36b0a1fc84f172bcae8508b44554b2aca416	yes	4

	Multipart Description/PDF files in .zip description		
	Document Description	**Start**	**End**
	Information Disclosure Statement Letter	1	2
	Information Disclosure Statement (IDS) Filed	3	4
Warnings:			
Information:			
	Total Files Size (in bytes):	124107	

This Acknowledgement Receipt evidences receipt on the noted date by the USPTO of the indicated documents, characterized by the applicant, and including page counts, where applicable. It serves as evidence of receipt similar to a Post Card, as described in MPEP 503.

New Applications Under 35 U.S.C. 111
If a new application is being filed and the application includes the necessary components for a filing date (see 37 CFR 1.53(b)-(d) and MPEP 506), a Filing Receipt (37 CFR 1.54) will be issued in due course and the date shown on this Acknowledgement Receipt will establish the filing date of the application.

National Stage of an International Application under 35 U.S.C. 371
If a timely submission to enter the national stage of an international application is compliant with the conditions of 35 U.S.C. 371 and other applicable requirements a Form PCT/DO/EO/903 indicating acceptance of the application as a national stage submission under 35 U.S.C. 371 will be issued in addition to the Filing Receipt, in due course.

New International Application Filed with the USPTO as a Receiving Office
If a new international application is being filed and the international application includes the necessary components for an international filing date (see PCT Article 11 and MPEP 1810), a Notification of the International Application Number and of the International Filing Date (Form PCT/RO/105) will be issued in due course, subject to prescriptions concerning national security, and the date shown on this Acknowledgement Receipt will establish the international filing date of the application.

UNITED STATES PATENT AND TRADEMARK OFFICE

UNITED STATES DEPARTMENT OF COMMERCE
United States Patent and Trademark Office
Address: COMMISSIONER FOR PATENTS
P.O. Box 1450
Alexandria, Virginia 22313-1450
www.uspto.gov

APPLICATION NUMBER	FILING or 371(c) DATE	GRP ART UNIT	FIL FEE REC'D	ATTY.DOCKET.NO
11/768,892	06/26/2007	2617	1950	09685.0045-00000

CONFIRMATION NO. 3817

FILING RECEIPT

22852
FINNEGAN, HENDERSON, FARABOW, GARRETT & DUNNER LLP
901 NEW YORK AVENUE, NW
WASHINGTON, DC20001-4413

Date Mailed: 07/18/2007

Receipt is acknowledged of this non-provisional patent application. The application will be taken up for examination in due course. Applicant will be notified as to the results of the examination. Any correspondence concerning the application must include the following identification information: the U.S. APPLICATION NUMBER, FILING DATE, NAME OF APPLICANT, and TITLE OF INVENTION. Fees transmitted by check or draft are subject to collection. Please verify the accuracy of the data presented on this receipt. **If an error is noted on this Filing Receipt, please write to the Office of Initial Patent Examination's Filing Receipt Corrections. Please provide a copy of this Filing Receipt with the changes noted thereon. If you received a "Notice to File Missing Parts" for this application, please submit any corrections to this Filing Receipt with your reply to the Notice. When the USPTO processes the reply to the Notice, the USPTO will generate another Filing Receipt incorporating the requested corrections**

Applicant(s)

Joshua Hartwell, Santa Monica, CA;

Assignment For Published Patent Application

GOSUB 60, Inc., Santa Monica, CA

Power of Attorney: The patent practitioners associated with Customer Number 22852

Domestic Priority data as claimed by applicant

Foreign Applications

If Required, Foreign Filing License Granted: 07/17/2007

The country code and number of your priority application, to be used for filing abroad under the Paris Convention, is **US11/768,892**

Projected Publication Date: 01/01/2009

Non-Publication Request: No

Early Publication Request: No

Title

Methods and Systems for Updating In-Game Content

Preliminary Class

PROTECTING YOUR INVENTION OUTSIDE THE UNITED STATES

Since the rights granted by a U.S. patent extend only throughout the territory of the United States and have no effect in a foreign country, an inventor who wishes patent protection in another country must apply for a patent in a specific country or in regional patent offices. Applicants may wish to consider the filing of an international application under the Patent Cooperation Treaty (PCT). An international (PCT) application generally has the same effect as a regular national patent application in each PCT-member country. The PCT process **simplifies** the filing of patent applications on the same invention in member countries, but **does not result** in a grant of "an international patent" and does not eliminate the need of applicants to file additional documents and fees in countries where patent protection is desired.

Almost every country has its own patent law, and a person desiring a patent in a particular country must make an application for patent in that country in accordance with its particular laws. Since the laws of many countries differ in various respects from the patent law of the United States, applicants are advised to seek guidance from specific foreign countries to ensure that patent rights are not lost prematurely.

Applicants also are advised that in the case of inventions made in the United States, the Director of the USPTO must issue a license before applicants can apply for a patent in a foreign country. The filing of a U.S. patent application serves as a request for a foreign filing license. The application's filing receipt contains further information and guidance as to the status of applicant's license for foreign filing.

Applicants may wish to consult the USPTO booklet, "General Information Concerning Patents" (specifically, the section entitled "Treaties and Foreign Patents") for more information on timeframes and deadlines for filing foreign patent applications. The guide is available either by contacting the USPTO Contact Center at 800-786-9199, or it can be viewed on the USPTO website at http://www.uspto.gov/web/offices/pac/doc/general/index.html.

For information on preventing theft of your intellectual property (patents, trademarks and copyrights), you may wish to consult the U.S. Government website, http://www.stopfakes.gov. Part of a Department of Commerce initiative, this website includes self-help "toolkits" giving innovators guidance on how to protect intellectual property in specific countries such as China, Korea and Mexico. For questions regarding patent enforcement issues, applicants may call the U.S. Government hotline at 1-866-999-HALT (1-866-999-4158).

LICENSE FOR FOREIGN FILING UNDER

Title 35, United States Code, Section 184

Title 37, Code of Federal Regulations, 5.11 & 5.15

GRANTED

The applicant has been granted a license under 35 U.S.C. 184, if the phrase "IF REQUIRED, FOREIGN FILING LICENSE GRANTED" followed by a date appears on this form. Such licenses are issued in all applications where the conditions for issuance of a license have been met, regardless of whether or not a license may be required as set forth in 37 CFR 5.15. The scope and limitations of this license are set forth in 37 CFR 5.15(a) unless an earlier license has been issued under 37 CFR 5.15(b). The license is subject to revocation upon written notification. The date indicated is the effective date of the license, unless an earlier license of similar scope has been granted under 37 CFR 5.13 or 5.14.

This license is to be retained by the licensee and may be used at any time on or after the effective date thereof unless it is revoked. This license is automatically transferred to any related applications(s) filed under 37 CFR 1.53(d). This license is not retroactive.

The grant of a license does not in any way lessen the responsibility of a licensee for the security of the subject matter as imposed by any Government contract or the provisions of existing laws relating to

espionage and the national security or the export of technical data. Licensees should apprise themselves of current regulations especially with respect to certain countries, of other agencies, particularly the Office of Defense Trade Controls, Department of State (with respect to Arms, Munitions and Implements of War (22 CFR 121-128)); the Bureau of Industry and Security, Department of Commerce (15 CFR parts 730-774); the Office of Foreign AssetsControl, Department of Treasury (31 CFR Parts 500+) and the Department of Energy.

NOT GRANTED

No license under 35 U.S.C. 184 has been granted at this time, if the phrase "IF REQUIRED, FOREIGN FILING LICENSE GRANTED" DOES NOT appear on this form. Applicant may still petition for a license under 37 CFR 5.12, if a license is desired before the expiration of 6 months from the filing date of the application. If 6 months has lapsed from the filing date of this application and the licensee has not received any indication of a secrecy order under 35 U.S.C. 181, the licensee may foreign file the application pursuant to 37 CFR 5.15(b).

UNITED STATES PATENT AND TRADEMARK OFFICE

UNITED STATES DEPARTMENT OF COMMERCE
United States Patent and Trademark Office
Address: COMMISSIONER FOR PATENTS
P.O. Box 1450
Alexandria, Virginia 22313-1450
www.uspto.gov

APPLICATION NUMBER	FILING or 371(c) DATE	GRP ART UNIT	FIL FEE REC'D	ATTY.DOCKET.NO
11/768,892	06/26/2007	2617	1950	09685.0045-00000

CONFIRMATION NO. 3817

FILING RECEIPT

22852
FINNEGAN, HENDERSON, FARABOW, GARRETT & DUNNER LLP
901 NEW YORK AVENUE, NW
WASHINGTON, DC20001-4413

Date Mailed: 07/17/2007

Receipt is acknowledged of this non-provisional patent application. The application will be taken up for examination in due course. Applicant will be notified as to the results of the examination. Any correspondence concerning the application must include the following identification information: the U.S. APPLICATION NUMBER, FILING DATE, NAME OF APPLICANT, and TITLE OF INVENTION. Fees transmitted by check or draft are subject to collection. Please verify the accuracy of the data presented on this receipt. **If an error is noted on this Filing Receipt, please write to the Office of Initial Patent Examination's Filing Receipt Corrections. Please provide a copy of this Filing Receipt with the changes noted thereon. If you received a "Notice to File Missing Parts" for this application, please submit any corrections to this Filing Receipt with your reply to the Notice. When the USPTO processes the reply to the Notice, the USPTO will generate another Filing Receipt incorporating the requested corrections**

Applicant(s)

Joshua Hartwell, Santa Monica, CA;

Assignment For Published Patent Application

GOSUB 60, Inc., Santa Monica, CA

Power of Attorney: The patent practitioners associated with Customer Number 22852

Domestic Priority data as claimed by applicant

Foreign Applications

If Required, Foreign Filing License Granted: 07/17/2007

The country code and number of your priority application, to be used for filing abroad under the Paris Convention, is **US11/768,892**

Projected Publication Date: 01/01/2009

Non-Publication Request: No

Early Publication Request: No

Title

Systems and Methods for Updating In-Game Content

Preliminary Class

PROTECTING YOUR INVENTION OUTSIDE THE UNITED STATES

Since the rights granted by a U.S. patent extend only throughout the territory of the United States and have no effect in a foreign country, an inventor who wishes patent protection in another country must apply for a patent in a specific country or in regional patent offices. Applicants may wish to consider the filing of an international application under the Patent Cooperation Treaty (PCT). An international (PCT) application generally has the same effect as a regular national patent application in each PCT-member country. The PCT process **simplifies** the filing of patent applications on the same invention in member countries, but **does not result** in a grant of "an international patent" and does not eliminate the need of applicants to file additional documents and fees in countries where patent protection is desired.

Almost every country has its own patent law, and a person desiring a patent in a particular country must make an application for patent in that country in accordance with its particular laws. Since the laws of many countries differ in various respects from the patent law of the United States, applicants are advised to seek guidance from specific foreign countries to ensure that patent rights are not lost prematurely.

Applicants also are advised that in the case of inventions made in the United States, the Director of the USPTO must issue a license before applicants can apply for a patent in a foreign country. The filing of a U.S. patent application serves as a request for a foreign filing license. The application's filing receipt contains further information and guidance as to the status of applicant's license for foreign filing.

Applicants may wish to consult the USPTO booklet, "General Information Concerning Patents" (specifically, the section entitled "Treaties and Foreign Patents") for more information on timeframes and deadlines for filing foreign patent applications. The guide is available either by contacting the USPTO Contact Center at 800-786-9199, or it can be viewed on the USPTO website at http://www.uspto.gov/web/offices/pac/doc/general/index.html.

For information on preventing theft of your intellectual property (patents, trademarks and copyrights), you may wish to consult the U.S. Government website, http://www.stopfakes.gov. Part of a Department of Commerce initiative, this website includes self-help "toolkits" giving innovators guidance on how to protect intellectual property in specific countries such as China, Korea and Mexico. For questions regarding patent enforcement issues, applicants may call the U.S. Government hotline at 1-866-999-HALT (1-866-999-4158).

LICENSE FOR FOREIGN FILING UNDER

Title 35, United States Code, Section 184

Title 37, Code of Federal Regulations, 5.11 & 5.15

GRANTED

The applicant has been granted a license under 35 U.S.C. 184, if the phrase "IF REQUIRED, FOREIGN FILING LICENSE GRANTED" followed by a date appears on this form. Such licenses are issued in all applications where the conditions for issuance of a license have been met, regardless of whether or not a license may be required as set forth in 37 CFR 5.15. The scope and limitations of this license are set forth in 37 CFR 5.15(a) unless an earlier license has been issued under 37 CFR 5.15(b). The license is subject to revocation upon written notification. The date indicated is the effective date of the license, unless an earlier license of similar scope has been granted under 37 CFR 5.13 or 5.14.

This license is to be retained by the licensee and may be used at any time on or after the effective date thereof unless it is revoked. This license is automatically transferred to any related applications(s) filed under 37 CFR 1.53(d). This license is not retroactive.

The grant of a license does not in any way lessen the responsibility of a licensee for the security of the subject matter as imposed by any Government contract or the provisions of existing laws relating to

espionage and the national security or the export of technical data. Licensees should apprise themselves of current regulations especially with respect to certain countries, of other agencies, particularly the Office of Defense Trade Controls, Department of State (with respect to Arms, Munitions and Implements of War (22 CFR 121-128)); the Bureau of Industry and Security, Department of Commerce (15 CFR parts 730-774); the Office of Foreign AssetsControl, Department of Treasury (31 CFR Parts 500+) and the Department of Energy.

NOT GRANTED

No license under 35 U.S.C. 184 has been granted at this time, if the phrase "IF REQUIRED, FOREIGN FILING LICENSE GRANTED" DOES NOT appear on this form. Applicant may still petition for a license under 37 CFR 5.12, if a license is desired before the expiration of 6 months from the filing date of the application. If 6 months has lapsed from the filing date of this application and the licensee has not received any indication of a secrecy order under 35 U.S.C. 181, the licensee may foreign file the application pursuant to 37 CFR 5.15(b).

PTO/SB/05 (06-07)
Approved for use through 06/30/2007. OMB 0651-0032
U.S. Patent and Trademark Office. U.S. DEPARTMENT OF COMMERCE
Under the Paperwork Reduction Act of 1995, no persons are required to respond to a collection of information unless it displays a valid OMB control number.

UTILITY PATENT APPLICATION TRANSMITTAL

(Only for new nonprovisional applications under 37 CFR 1.53(b))

Attorney Docket No.	09685.0045-00000
First Inventor	Joshua HARTWELL
Title	Systems and Methods for...
Express Mail Label No.	Filed by EFS-Web

APPLICATION ELEMENTS

See MPEP chapter 600 concerning utility patent application contents.

ADDRESS TO: **Commissioner for Patents**
P.O. Box 1450
Alexandria VA 22313-1450

1. ☑ **Fee Transmittal Form** (e.g., PTO/SB/17)
   (Submit an original and a duplicate for fee processing)
2. ☐ **Applicant claims small entity status**. See 37 CFR 1.27.
3. ☑ **Specification** [*Total Pages* 38]
   Both the claims and abstract must start on a new page
   (For information on the preferred arrangement, see MPEP 608.01(a))
4. ☑ **Drawing(s)** (*35 U.S.C. 113*) [*Total Sheets* 7]
5. **Oath or Declaration** [*Total Sheets* 1]
   a. ☑ Newly executed (original or copy)
   b. ☐ A copy from a prior application (37 CFR 1.63(d))
   (for continuation/divisional with Box 18 completed)
   i. ☐ DELETION OF INVENTOR(S)
   Signed statement attached deleting inventor(s) name in the prior application, see 37 CFR 1.63(d)(2) and 1.33(b).
6. ☑ **Application Data Sheet.** See 37 CFR 1.76
7. ☐ **CD-ROM or CD-R** in duplicate, large table or Computer Program *(Appendix)*
   ☐ Landscape Table on CD
8. **Nucleotide and/or Amino Acid Sequence Submission**
   (if applicable, items a. – c. are required)
   a. ☐ Computer Readable Form (CRF)
   b. Specification Sequence Listing on:
      i. ☐ CD-ROM or CD-R (2 copies); or
      ii. ☐ Paper
   c. ☐ Statements verifying identity of above copies

ACCOMPANYING APPLICATION PARTS

9. ☐ **Assignment Papers** (cover sheet & document(s))
   Name of Assignee_____
10. ☐ **37 CFR 3.73(b) Statement** *(when there is an assignee)* ☐ **Power of Attorney**
11. ☐ **English Translation Document** *(if applicable)*
12. ☐ **Information Disclosure Statement** (PTO/SB/08 or PTO-1449)
    ☐ Copies of citations attached
13. ☐ **Preliminary Amendment**
14. ☐ **Return Receipt Postcard** (MPEP 503)
    (*Should be specifically itemized)*
15. ☐ **Certified Copy of Priority Document(s)**
    (if foreign priority is claimed)
16. ☐ **Nonpublication Request** under 35 U.S.C. 122(b)(2)(B)(i). Applicant must attach form PTO/SB/35 or equivalent.
17. ☐ Other:_____

18. If a CONTINUING APPLICATION, *check appropriate box, and supply the requisite information below and in the first sentence of the specification following the title, or in an Application Data Sheet under 37 CFR 1.76:*

☐ Continuation ☐ Divisional ☐ Continuation-in-part (CIP) of prior application No.: .....

Prior application information: *Examiner* _____ *Art Unit:* _____

19. CORRESPONDENCE ADDRESS

☑ The address associated with Customer Number: 22,852 ***OR*** ☐ Correspondence address below

Name					
Address					
City		State		Zip Code	
Country		Telephone		Email	

Signature	/Robert C. Stanley/	Date	2007 June 26
Name (Print/Type)	Robert C. Stanley	Registration No. (Attorney/Agent)	55,830

This collection of information is required by 37 CFR 1.53(b). The information is required to obtain or retain a benefit by the public which is to file (and by the USPTO to process) an application. Confidentiality is governed by 35 U.S.C. 122 and 37 CFR 1.11 and 1.14. This collection is estimated to take 12 minutes to complete, including gathering, preparing, and submitting the completed application form to the USPTO. Time will vary depending upon the individual case. Any comments on the amount of time you require to complete this form and/or suggestions for reducing this burden, should be sent to the Chief Information Officer, U.S. Patent and Trademark Office, U.S. Department of Commerce, P.O. Box 1450, Alexandria, VA 22313-1450. DO NOT SEND FEES OR COMPLETED FORMS TO THIS ADDRESS. **SEND TO: Commissioner for Patents, P.O. Box 1450, Alexandria, VA 22313-1450.**
If you need assistance in completing the form, call 1-800-PTO-9199 and select option 2.

APPLICATION DATA SHEET

Application Information

Application Type::	Regular
Subject Matter::	Utility
Title::	METHODS AND SYSTEMS FOR UPDATING IN-GAME CONTENT
Attorney Docket Number::	09685.0045-00000
Request for Early Publication?::	No
Request for Non-Publication?::	No
Suggested Drawing Figure::	2A
Total Drawing Sheets::	7
Small Entity::	No
Petition included?::	No
Secrecy Order in Parent Appl.?::	No

Applicant Information

Applicant Authority Type::	Inventor
Primary Citizenship Country::	UNITED STATES OF AMERICA
Status::	Full Capacity
Given Name::	Joshua
Family Name::	Hartwell
City of Residence::	Santa Monica
State of Province of Residence::	CA
Country of Residence::	US
Street of mailing address::	838 Twenty-Sixth Street
City of mailing address::	Santa Monica
State or Province of mailing address::	CA
Postal or Zip Code of mailing address::	90403

Correspondence Information

Correspondence Customer Number:: 22852

Representative Information

Representative Customer Number:: 22852

Domestic Priority Information

<<NONE>>

Foreign Priority Information

<<NONE>>

Assignee Information

Assignee Name::	GOSUB 60, Inc.
Street of mailing address::	1334 Third Street Promenade
City of mailing address::	Santa Monica
State or Province of mailing address::	CA
Country of mailing address::	US
Postal or Zip Code of mailing address::	90401

DECLARATION AND POWER OF ATTORNEY

As a below named inventor, I hereby declare that: my residence, post office address, and citizenship are as stated below next to my name; I believe I am the original, first, and sole inventor of the subject matter which is claimed and for which a patent is sought on the invention entitled:

SYSTEMS AND METHODS FOR PROVIDING IN-GAME CONTENT

the specification of which is submitted herewith.

I hereby state that I have reviewed and understand the contents of the above-identified specification, including the claims. I acknowledge the duty to disclose information that is material to patentability as defined in 37 C.F.R. § 1.56.

I hereby appoint the patent practitioners associated with:

FINNEGAN, HENDERSON, FARABOW, GARRETT & DUNNER, L.L.P.
CUSTOMER NUMBER 22,852

to prosecute this application and transact all business in the Patent and Trademark Office connected therewith.

I hereby declare that all statements made herein of my own knowledge are true and that all statements made on information and belief are believed to be true; and further that these statements were made with the knowledge that willful false statements and the like so made are punishable by fine or imprisonment, or both, under section 1001 of Title 18 of the United States Code, and that such willful false statements may jeopardize the validity of the application or any patent issuing thereon.

Full Name of First Inventor Joshua Hartwell	Inventor's Signature	Date 6-25-07
Residence 838 Twenty-Sixth Street Santa Monica, California 90403		Citizenship U.S.A.
Post Office Address --Same As Residence--		

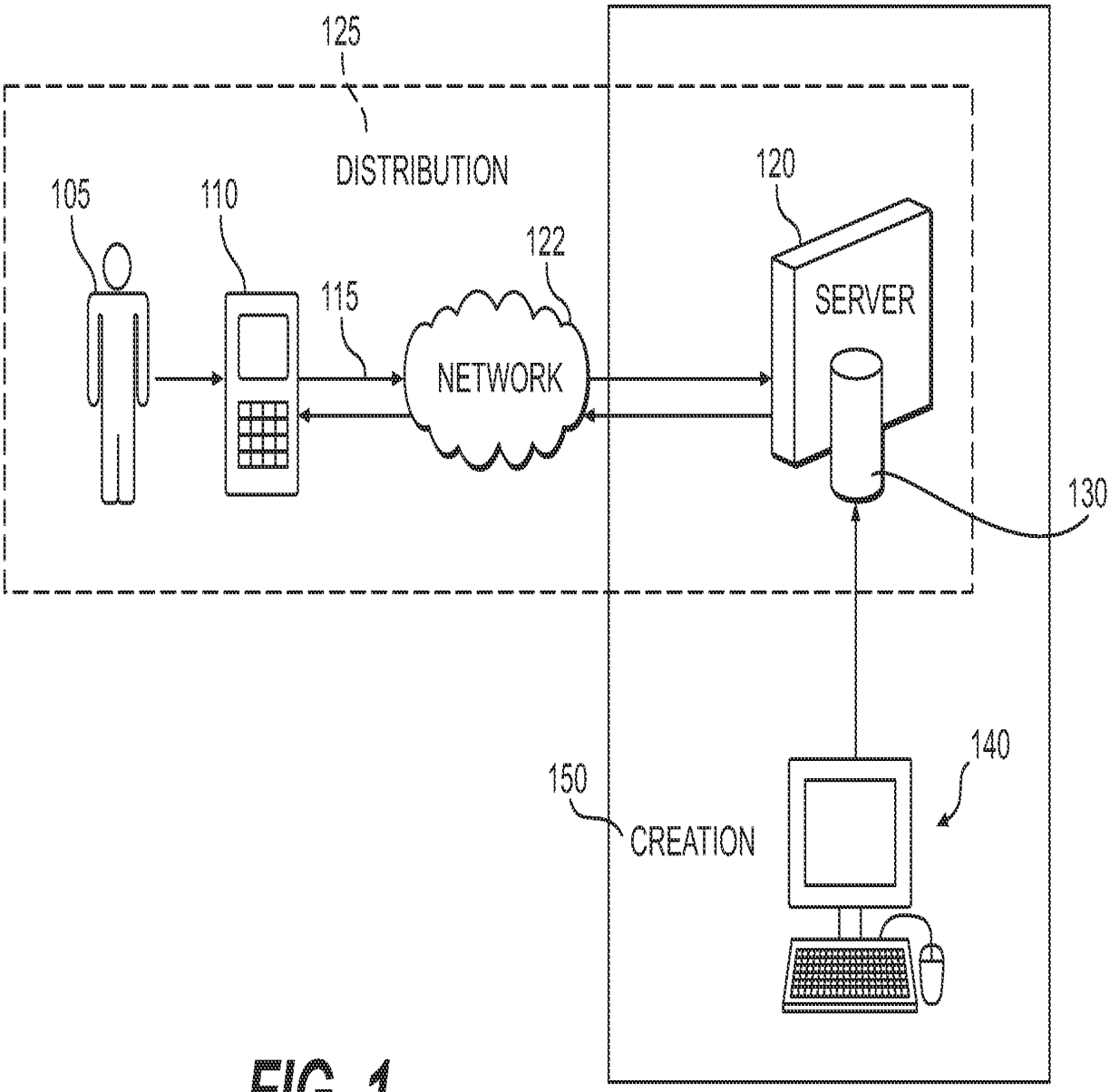
125
DISTRIBUTION
105
110
115
122
NETWORK
120
SERVER
130
140
150
CREATION

FIG. 1

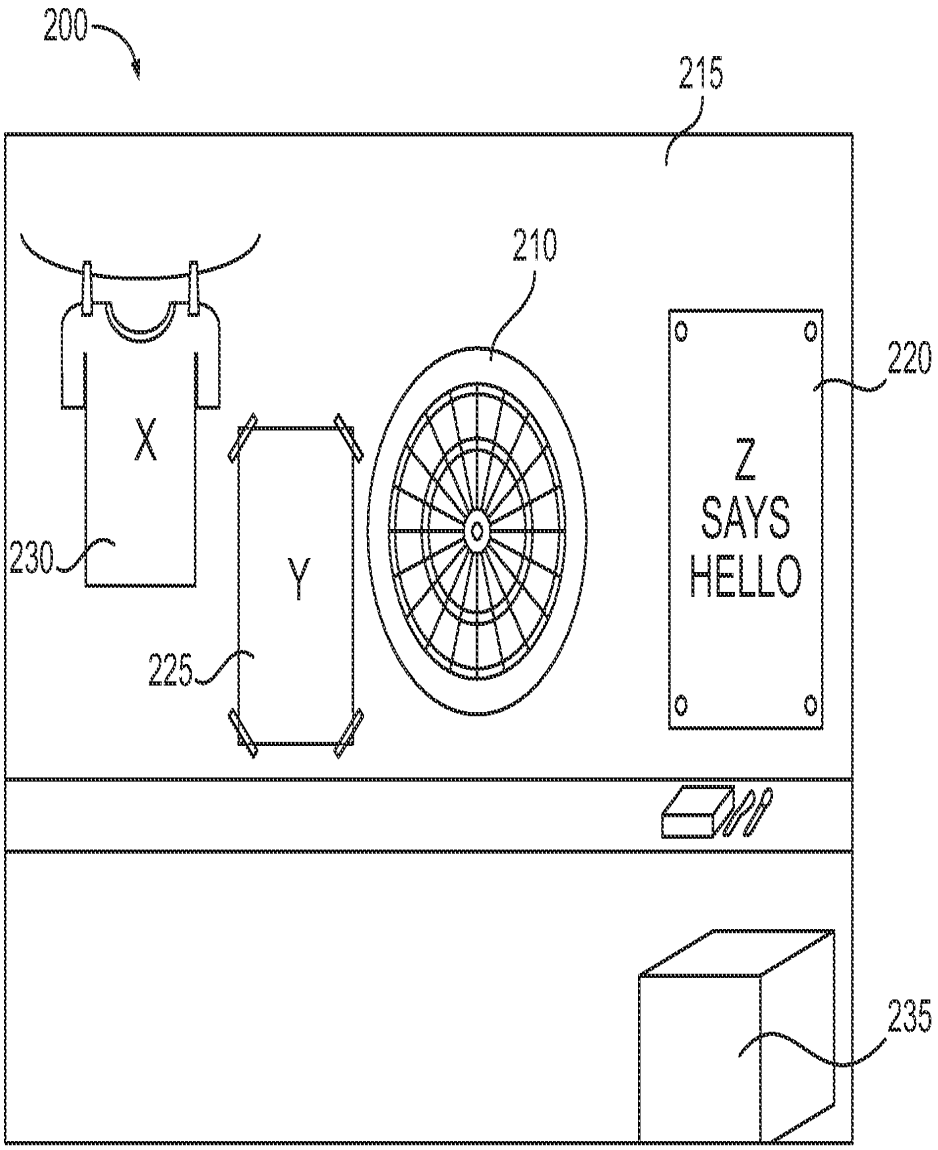

FIG. 2A

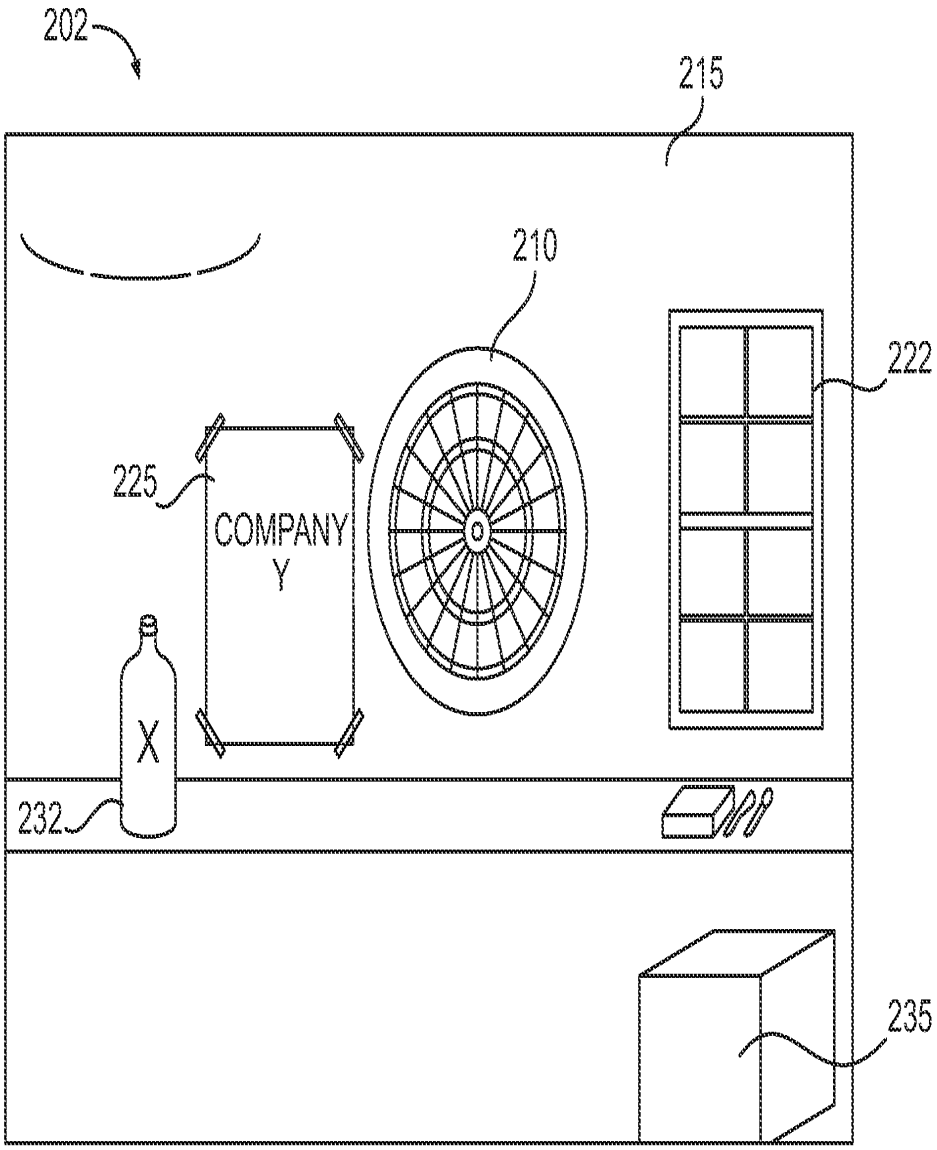

FIG. 2B

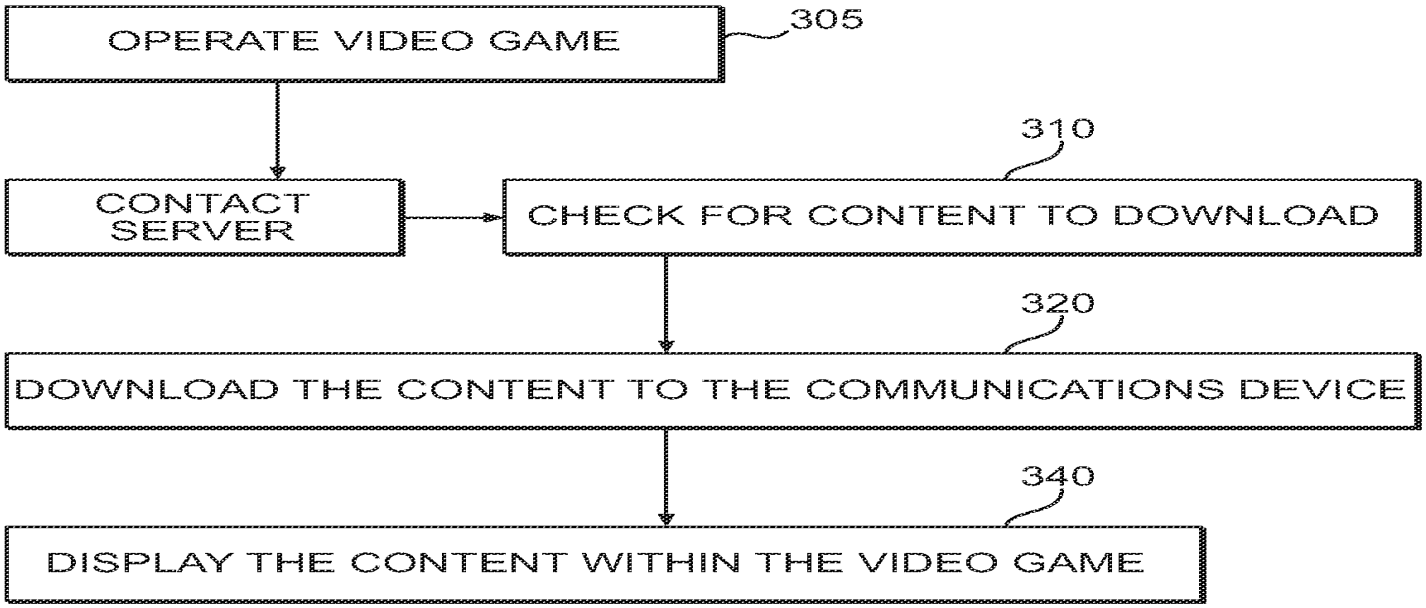
OPERATE VIDEO GAME
305
CONTACT SERVER
CHECK FOR CONTENT TO DOWNLOAD
310
DOWNLOAD THE CONTENT TO THE COMMUNICATIONS DEVICE
320
DISPLAY THE CONTENT WITHIN THE VIDEO GAME
340

FIG. 3A

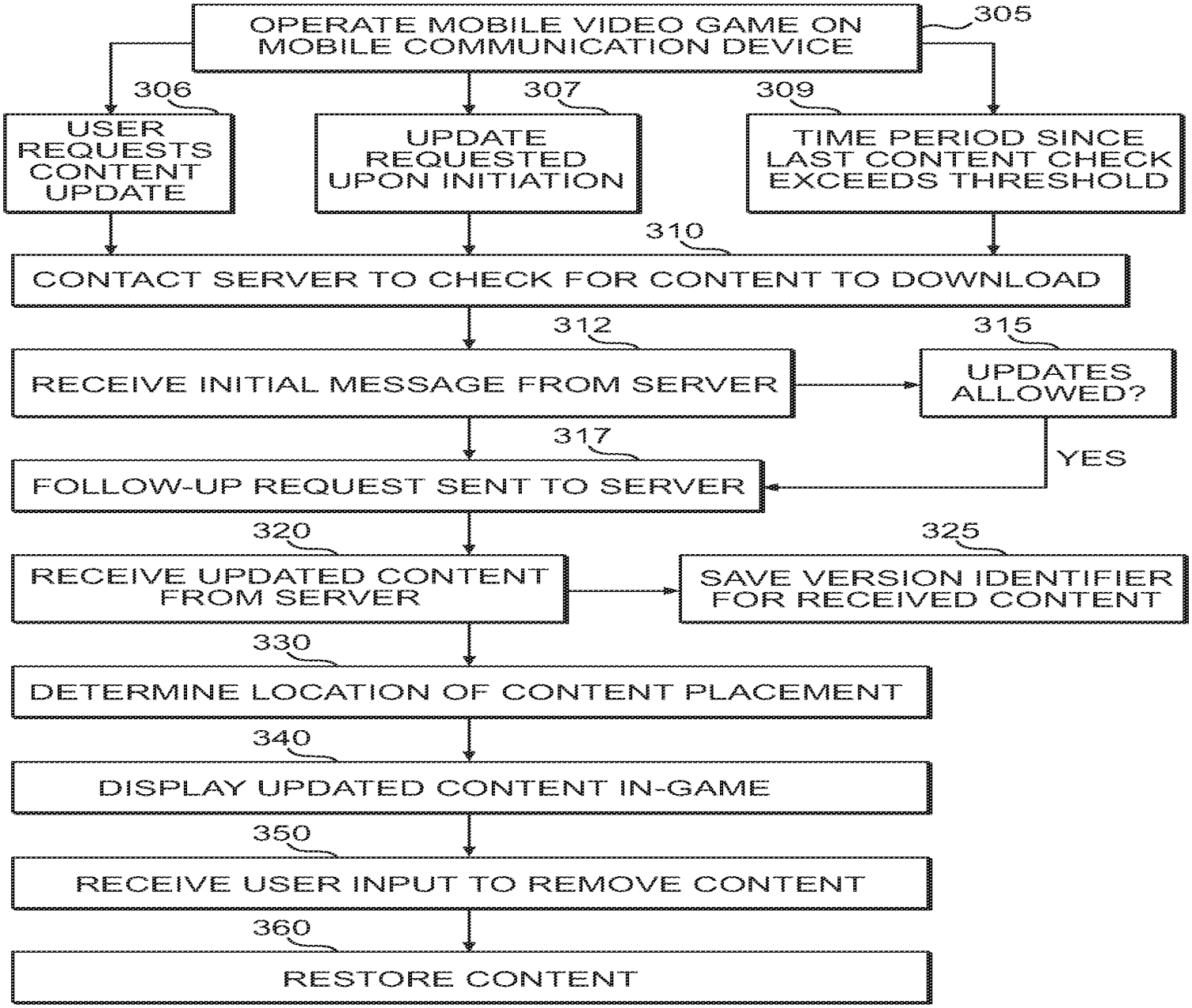
OPERATE MOBILE VIDEO GAME ON MOBILE COMMUNICATION DEVICE
305
306
USER REQUESTS CONTENT UPDATE
307
UPDATE REQUESTED UPON INITIATION
309
TIME PERIOD SINCE LAST CONTENT CHECK EXCEEDS THRESHOLD
310
CONTACT SERVER TO CHECK FOR CONTENT TO DOWNLOAD
312
RECEIVE INITIAL MESSAGE FROM SERVER
315
UPDATES ALLOWED?
YES
317
FOLLOW-UP REQUEST SENT TO SERVER
320
RECEIVE UPDATED CONTENT FROM SERVER
325
SAVE VERSION IDENTIFIER FOR RECEIVED CONTENT
330
DETERMINE LOCATION OF CONTENT PLACEMENT
340
DISPLAY UPDATED CONTENT IN-GAME
350
RECEIVE USER INPUT TO REMOVE CONTENT
360
RESTORE CONTENT

FIG. 3B

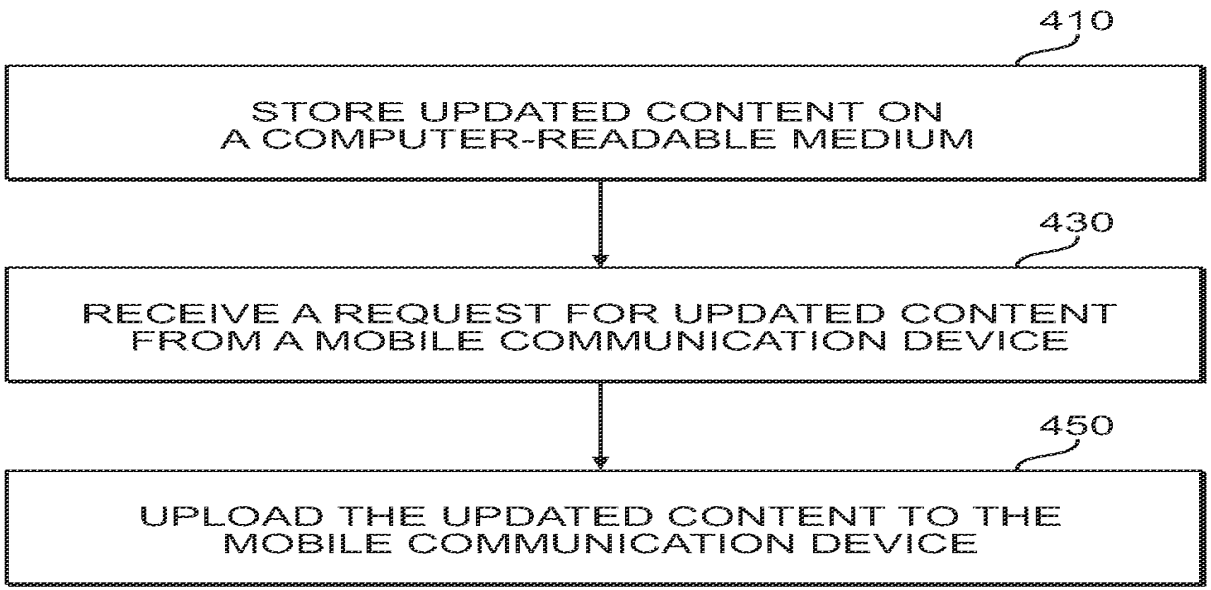
410
STORE UPDATED CONTENT ON A COMPUTER-READABLE MEDIUM
430
RECEIVE A REQUEST FOR UPDATED CONTENT FROM A MOBILE COMMUNICATION DEVICE
450
UPLOAD THE UPDATED CONTENT TO THE MOBILE COMMUNICATION DEVICE

FIG. 4A

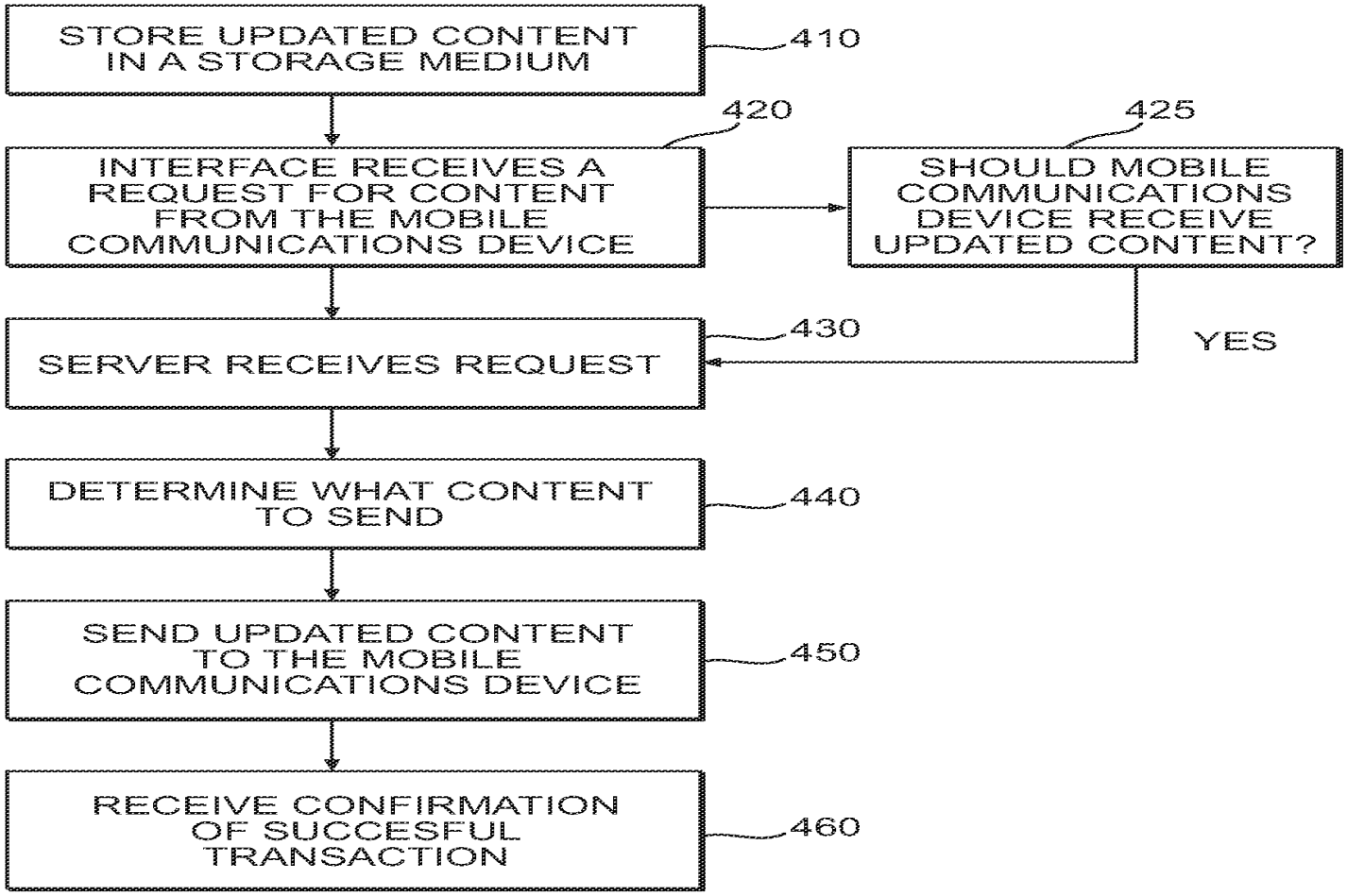
STORE UPDATED CONTENT IN A STORAGE MEDIUM
410
INTERFACE RECEIVES A REQUEST FOR CONTENT FROM THE MOBILE COMMUNICATIONS DEVICE
420
SHOULD MOBILE COMMUNICATIONS DEVICE RECEIVE UPDATED CONTENT?
425
YES
SERVER RECEIVES REQUEST
430
DETERMINE WHAT CONTENT TO SEND
440
SEND UPDATED CONTENT TO THE MOBILE COMMUNICATIONS DEVICE
450
RECEIVE CONFIRMATION OF SUCCESFUL TRANSACTION
460

FIG. 4B

UNITED STATES PATENT APPLICATION

FOR

SYSTEMS AND METHODS FOR UPDATING IN-GAME CONTENT

BY

JOSHUA HARTWELL

DESCRIPTION OF THE INVENTION

Field of the Invention

[001] The invention relates generally to systems and methods for providing updated video game content to a mobile communication device.

Background of the Invention

[002] Many mobile communication devices (including cellular phones, PDAs, and other handheld devices capable of communicating with a server) are capable of operating video games. Most current mobile communication devices come equipped with one or more games at the time of purchase, and most modern mobile communication devices also allow users to download and/or purchase new games. As mobile communication device technology has advanced, the games available for these devices have become more robust. For example, most current mobile communication devices include color screens that can support games with detailed color graphics, and more content may generally fit onto these screens than on screens of older mobile devices. As a result, gaming on mobile communication devices has become a popular mode of entertainment in a mobile environment.

[003] However, all video games tend to have a popularity life span. As game elements become increasingly familiar to players, the game may hold less surprises and/or no longer present a challenge to the user, at which point the user may stop playing that particular game in favor of others. Because mobile communication devices are generally less powerful than personal computers and stand-alone video game consoles, some games for mobile communication devices may be relatively simple or repetitive by comparison. Typically, games that hold user interest for longer periods of

time are more valuable than games that users leave behind quickly. As a result, game creators are always looking for ways to make games that hold the user's interest for a longer period of time.

[004] The recent surge in technical capabilities of mobile communication devices has also spawned attractive new promotional possibilities. Because an extremely large number of people worldwide own mobile communication devices, many third parties may wish to advertise within the screen of a mobile communication device. In particular, when a user plays a game on the mobile communication device, the user's full attention may be directed to the screen of the mobile communication device. Therefore, providing in-game advertising space in the palm of the user's hand is an attractive proposition for both buyers and sellers of the space.

[005] Permanent advertisements within a video game that is played on a mobile communication device may be presented in various ways. For example, the background of the video game might contain a permanent advertisement for a third party. In most cases, this advertisement would generate revenue for the maker of the game, while also serving as a valuable promotional opportunity for the third party.

[006] However, the potential popularity of a mobile communication device game may be unknown until after the game is released to the public. Even then, it may be difficult to gauge how long the game will keep its popularity. This creates uncertainty in the process of buying and selling promotional space within a video game. Specifically, because long term popularity is difficult to determine, both the game company and the third-party advertiser may find valuation of the permanent in-game advertisement space difficult. The third party may not want to pay for a permanent ad

that spans the lifetime of the game, when the success of the game is relatively uncertain.

[007] It is accordingly an object of the invention to provide systems and methods for updating in-game content on a mobile communication device. Some embodiments may prolong user interest in a game for a mobile communication device, and make promotional opportunities more predictable and/or desirable, as follows.

SUMMARY OF THE INVENTION

[008] In accordance with embodiments of the invention, systems and methods for updating in-game content on a mobile communication device are provided.

[009] In an embodiment, a mobile communication device may comprise a screen for viewing by the user, a processor, and a memory. The memory may contain instructions that, when executed by the processor, cause the communications device to operate a video game, contact a server to check for updated content to use in the video game, download the updated content to the communications device from a server, and display the updated content within the video game. The video game itself may be presented on the screen.

[010] The displayed content may be, for example, promotional content. The content may be displayed within the game at a location based on user interaction.

[011] In addition, various steps may exist for checking updated content on the server. For example, checking for updated content on the server may be performed upon launch of the video game, in some embodiments. The check may also be performed upon request by a user of the mobile communication device. In addition, checking for updated content may also be performed periodically.

[012] In some embodiments, the mobile communication device may receive and utilize a message from the server in response to checking for updated content. For example, the message may contain information that is displayed to the user. Alternatively or in addition, the message may describe updated content available at the server.

[013] The communications device may, in some embodiments, check whether the updated content should be downloaded before downloading the updated content from the server. If downloading is appropriate, the communications device may send a follow-up request to the server indicating that the user wishes to download the updated content from the server. Subsequently, the communications device may download the updated content.

[014] Another embodiment disclosed herein includes a computer-readable medium containing instructions for execution by a mobile communication device. The instructions may cause the mobile communication device to operate a video game, contact a server to check for updated content for use in the video game, download the updated content to the communications device, and display the updated content within the video game. The video game may be presented within a screen controlled by the mobile communication device.

[015] A method for distributing updated content to a communications device for use in a video game that runs on the communications device is disclosed herein. In an embodiment, the method may comprise the steps of storing updated content on a computer-readable medium, receiving a request for updated content from a mobile communication device, the updated content being usable in a video-game that already

exists on the communications device, and uploading content to the communications device from the server, the content being usable when the video game operates on the communications device.

[016] For example, the content may be promotional content. Information may be sent to the communications device regarding the in-game placement location of the content. In addition, the content may include a helpful tip or suggestion to the user of the video game.

[017] Some embodiments may include the additional step of checking whether the communications device should receive the updated content before uploading the updated content to the communications device. In addition, the method may call for tracking what updated content has been uploaded.

[018] Further, some embodiments may include a system for distributing updated video game content to a communications device. The system may comprise a storage medium for storing updated content for use in a video game, a server in communication with the storage medium, and an interface coupled to the server and a network, wherein the interface receives a request for updated content from the communications device over the network. In some systems, the server may be operative to receive a request through the interface and utilize the request to send the updated content from the storage medium to the communications device, the content being displayable in a video game on the communications device.

[019] The content may be promotional content. In addition, the server may send information to the communications device regarding the in-game placement location of the content. The server may send a message to the mobile communication

device in response to receiving the request, the message relating to the content. In some embodiments, the message is pre-selected by the server based on a model type associated with the communications device, a service subscription associated with the communications device, or a service provider for the service subscription associated with the communications device.

[020] Further, the server may store an indicator of whether the mobile communication device should receive the updated content. In these embodiments, the server may check the indicator before uploading the updated content to the communications device. The server may also track the distribution of updated content.

[021] It is to be understood that both the foregoing general description and the following detailed description are exemplary and explanatory only and are not restrictive of the invention, as claimed.

[022] The accompanying drawings, which are incorporated in and constitute a part of this specification, illustrate several embodiments of the invention and together with the description, serve to explain the principles of the invention.

BRIEF DESCRIPTION OF THE DRAWINGS

[023] Figure 1 is an overview diagram of exemplary components used to update in-game content on a mobile communication device in accordance with some embodiments of the present invention.

[024] Figures 2A-B are diagrams of an exemplary scene in a video game played on a mobile communication device in accordance with some embodiments of the present invention.

[025] Figures 3A-B are exemplary flow charts that include steps taken by a mobile communication device to update in-game content in accordance with an embodiment of the present invention.

[026] Figures 4A-B are exemplary flow charts that include steps taken by a server to update in-game content on a mobile communication device in accordance with an embodiment of the present invention.

DESCRIPTION OF THE EMBODIMENTS

[027] Reference will now be made in detail to the present exemplary embodiments of the invention, examples of which are illustrated in the accompanying drawings. Wherever possible, the same reference numbers will be used throughout the drawings to refer to the same or like parts.

[028] It is to be understood that both the foregoing background description and the following detailed description are exemplary and explanatory only and are not restrictive of the invention as claimed.

[029] This application incorporates by reference in its entirety the U.S. Patent Application entitled "Systems and Methods for Providing In-Game Hot Spots," filed concurrently with this application.

[030] As used herein, a server includes any remote system capable of receiving communication from a handheld device over a network, such as the Internet, intranet, local area network, telecommunications network, and/or Ethernet.

[031] An embodiment of the invention described below allows a game company and/or provider to provide updated content to a mobile communication device for use in a mobile video game that operates on the mobile communication device. The

ability to update in-game content may allow game companies to keep game elements fresh and prolong user enjoyment of the game. For example, a particular scene within the game may be rearranged so that the user has something new to look at or explore. In one embodiment, the updated content may comprise a new level within the game. In addition, the game company may charge third-party advertisers a fee per downloaded promotional update. Consequently, the game may sustain its popularity and be more profitable for the game creator than existing mobile communication device games.

[032] The game may be more attractive to third-party advertisers and provide promotional revenue for the game provider. An embodiment may provide an avenue for selling time blocks of in-game advertising. Third parties may now have the option to advertise for a period of time, rather than permanently, within a video game for a mobile communication device. This flexibility may allow the negotiation of promotional contracts that involve less guess-work with respect to the placing advertisements or virtual products within a video game on a mobile communication device. Further, an embodiment herein also provides promotional opportunities for third parties that could not previously afford to place advertisements within a game for a mobile communication device. For example, while purchasing a promotional spot that lasts the lifetime of the game may not be feasible, it may be much cheaper to purchase a smaller block of time.

[033] In some embodiments, advertisements may be tracked on a per-view or per-download basis. In these embodiments, it may be possible for the game company and/or distributor to profit based upon when promotional content is downloaded and/or viewed.

[034] In addition, local third party advertisers may be able to place promotional content on mobile communication devices located within a proximity to the locality.

[035] The ability to place updated content within the game may also provide an avenue for signing additional promotional contracts after the game has already been publicly released. For example, in a previously-released game, a bar scene might be filled with updated bottles that show a company logo not present at the time of the game's launch. The ongoing promotional aspects of such a system could be very attractive to both buyers and sellers of promotional space.

[036] Figure 1 is an overview diagram of exemplary components used to update in-game content on a mobile communication device in accordance with several embodiments of the present invention. Turning to Figure 1, both a distribution block 125 and a creation block 140 are shown. In the distribution block 125, the user 105 plays a mobile video game on mobile communication device 110. In some embodiments, the game includes instructions to check 115 for updated content at server 120. The mobile communication device may perform this check 115 by connecting to server 120 through network 122.

[037] In some embodiments, the mobile communication device 110 may contain a processor and a memory. The program instructions for the mobile video game may be located in the memory and executed by the processor, causing the game to operate on the mobile communication device. The mobile communication device may also contain a screen for displaying the mobile video game to the user 105.

[038] The network 122 may include, for example, the global internet. Alternatively or in addition, the network 122 may include a phone or data network. In an

embodiment, the mobile communication device 110 may connect to an interface (not shown) that may, in turn, pass a request for updated content to server 120. The interface may be part of server 120 or a separate device, depending on the embodiment. For example, the interface may receive communications from the network, validate the communications as coming from a known or compatible source, and then relay the communications to the server 120. In addition, server 120 may actually be implemented as one or more servers.

[039] In the example of Figure 1, updated content for a particular mobile communications device is stored on a data storage medium 130 as part of a group of pre-selected content for the mobile communications device. In this example, the data storage medium 130 is computer-readable. Potential data storage mediums include a hard drive, memory (such as RAM), and other storage devices (e.g., flash memory, a USB drive, compact disk, DVD, tape, or other media). The data storage medium may be implemented by one or more distinct storage mediums. In some embodiments, the updated content may be organized or indexed by a database of pre-selected content. The storage medium 130 may be a part of server 120 in some embodiments.

[040] After server 120 receives a communication request from mobile communication device 110, server 120 may check whether updated content is available for one or more mobile video games. If updated content is available, server 120 may send or provide (i.e., upload) the updated content to mobile communication device 110. Other steps, such as performing a check of whether the user wishes to receive the updated content, are possible in some embodiments. For example, the server 120 may store an indicator of whether updated content should be sent to the particular mobile

communication device 110. Additionally, before the updated content is downloaded, the user 105 may be prompted by mobile communication device 110 to make sure the user 105 wishes to add the updated content to the mobile video game.

[041] Other user information may also be utilized to determine which updated content to download, such as the sex, age, or interests of the user. Other checks are also possible, such as the geographic location of the user. In one embodiment, the user may be queried for this information. In another embodiment, the mobile communications device automatically transmits the information to the server and/or the server stores the information for later use.

[042] Once the updated content has been downloaded by mobile communication device 110, the content may be placed in-game (i.e., within the video game environment). The updated content may replace or supplement previously existing content within the game. For example, the updated content may be a new background, or it may include a new item that the user interacts with in-game.

[043] The updated content may be loaded into the server 120 and/or storage medium 130 from any number of external sources (although typical server access restrictions may apply). In Figure 1, computer 140 may upload the updated content to the server 120. In other embodiments, the updated content may be created on server 120. In still other embodiments, a user 105 may have the option create the updated content. For example, some embodiments may allow the user 110 to upload a picture to server 120, either via the mobile communication device 110 or some other device, such as a personal computer. An embodiment may also allow for the picture to be used as part of the updated content.

[044] The server 120 may be in communication with the storage medium 130 that contains the updated content so that the updated content may be retrieved and sent to the mobile communication device 110.

[045] Figures 2A-B are diagrams of an exemplary scene in a mobile video game played on a mobile communication device in accordance with several embodiments. The exemplary screen is from a darts game, which includes dart board 210. However, embodiments disclosed herein may benefit all types of mobile video games, and are not limited to darts games or any other particular type of mobile video game that is available for mobile communication devices.

[046] Turning now to Fig. 2A, several items 210, 220, 225, 230, and 235 are shown within scene 200. In this example, virtually any of these items may be changed by receiving updated content on the mobile communication device. For instance, the shirt 230 might be updated to include a logo associated with third party X (as shown). The poster 225 might advertise an upcoming movie for third party Y, and chalk board 220 may contain a handwritten advertisement for third party Z (as shown).

[047] The timing of updated content becoming available may be driven by promotional contract terms, such as with third parties X, Y, and Z. In this example, when the promotional contract with third party X ends, the logo on shirt 230 may be removed. In addition, the mobile communication device may thereafter download updated content reflecting a new graphic, shirt, or entirely new object, to place at 230. The updated shirt 230 may not even be promotional item, or it may advertise the in-game availability of a promotional spot. As an example, the shirt may be replaced with a sign that states “space available.” Localized promotional content may removed and/or

replaced in a shorter time frame if the mobile communication device enters a new local area with different localized promotional content in some embodiments.

[048] Turning to Fig. 2B, if third party X is a beverage company, a beverage 232 resembling those made by third party X could be placed within scene 200. In the example in Fig. 2B, the blackboard may be replaced with updated content, such as window 232. This may be done, for example, if the promotional contract with third party Z ends. Alternatively, the text on blackboard 220 of Fig. 2A may be erased and/or replaced with new text.

[049] Other content of the mobile video game, such as the shape, design, coloring of dartboard 210 or the texture or coloring of background 215 may be updated. In other games, new weapons, interactive characters, levels, hot spots, and other items may be provided as part of the update. In short, any content element used in the mobile video game may be updated, depending on the embodiment.

[050] Figures 3A-B are exemplary flow charts that include steps taken by a mobile communication device to update in-game content in accordance with an embodiment of the present invention. Turning to Figure 3A, the mobile communication device operates a mobile video game at step 305. The mobile video game may be any type of game operable on a mobile communication device.

[051] At step 310, the mobile communication device may contact a server. As will be explained in more detail with reference to Figure 3B, contacting the server may be triggered by many different events and occur at many different times, depending on the embodiment. The mobile video game may be concurrently operating in some embodiments, or not operating in other embodiments.

[052] After the server has been contacted, at step 310, the mobile communications device checks for an available update for the mobile video game. If updated content for the mobile video game is available, the mobile communication device may begin downloading the content at step 320. The length of time that passes between contacting the server at 310 and downloading the updated content varies between embodiments and depends on many factors, some of which are discussed in more detail with reference to Figure 3B. For example, other communications, such as an authorization to download files, may occur before downloading begins in some embodiments. Alternatively or in addition, downloading may be delayed in an embodiment until a time when more bandwidth is available or when downloading will not disrupt game play.

[053] At step 340, the mobile communication device may display the updated content within the mobile video game (i.e., in-game). For example, the shirt 230 from Fig. 2A may be removed and replaced with the bottle 232 from Fig. 2B. The exact timing of when the updated content is displayed in-game varies depending on the embodiment.

[054] Additionally, user interaction within the game may determine the location of content placement. For example, motion sensing devices within the mobile communication device may be used to determine where the updated content is displayed within the gaming environment. In one such embodiment, the user may make a throwing motion while holding the mobile communication device, which detects the motion and displays a thrown dart on dartboard 210 along with a message based upon the updated content. The mobile communication device may detect the motion via a

camera component of the mobile communication device. In another embodiment, motion is detected by one or more gyroscopes within the mobile communication device.

[055] Some embodiments may require the user to agree to display the content before the updated content is displayed. An embodiment might also include presenting the user with a message explaining the updated content. For example, before the updated content is displayed, the user might be presented with a message that states "X would like to redecorate this room". In some of those embodiments, the user may have the option of accepting or declining the display of the updated content.

[056] The updated content may also be displayed in a pop-up window. Pop-up windows that are spawned from the operation of the game are considered to be in-game for the purpose of this disclosure.

[057] Turning now to Figure 3B, a more elaborate set of exemplary steps followed by a mobile communication device in some embodiments is presented. At step 305, the mobile communication device may operate a mobile video game.

[058] Unlike in Figure 3A, Figure 3B includes intervening steps 306, 307, and 309 for triggering checks for updated content. Requests (i.e., checks) for updated content may or may not specify particular content, depending on the embodiment. For example, the mobile communication device may not know what updated content, if any, is available when the mobile communication device contacts the server at step 310. In some embodiments, the mobile communication device may identify a particular game, scene, and/or element within the game when it contacts the server. In other embodiments, the mobile communication device may request updated content for several games during contact with the server at step 310.

[059] Some of the methods for triggering a content update will now be discussed. In some embodiments, the user may manually request updated content at step 306. For example, the video game operating on the mobile communication device may include a selectable option to retrieve updated content. Selecting this option may cause the mobile communication device to immediately contact the server and check for content to download at step 310 in some embodiments. Alternatively, there may be further options, including retrieving updated content when the game ends or at some other time.

[060] In one embodiment, the mobile communication device may request updated content upon initialization of the video game. For example, when the game is selected or otherwise initialized by the user, the mobile communication device may automatically contact the server to check for content to download at step 310. In some of embodiments, the check may not be performed automatically on every startup. For example, upon initializing the game, the mobile communication device may check how much time has passed since the previous updated content download before automatically contacting to the server at 310. In those embodiments, the mobile communication device may track the dates of one or more previous content updates.

[061] In some embodiments, at step 309, the mobile communication device may connect to the server to check for updated content when the time period since the last request for updated content exceeds a threshold. As previously stated, in some embodiments step 309 is combined with step 307. In other embodiments, the time period since the last update is checked at times other than upon initializing the game. For example, upon reaching a certain level or scene in the game, the mobile

communication device may examine the last time the game, level, and/or scene was updated. If the time period exceeds a threshold, then the mobile device may contact the server at 310. The threshold time period between updates may vary depending upon the game and the embodiment. In some embodiments, the user may be able to increase or reduce the frequency of content updates by lowering or raising the threshold period. Those skilled in the art will appreciate that a user with lower bandwidth limits may not want to check for updates as often as a user who has higher limits in their service plan.

[062] In other embodiments, the mobile communication device may utilize a separate scheduler program to schedule a request for updated content. When the scheduled time for checking for updated content arrives, the mobile communication device may contact the server. The video game may not be operating while the request is sent in some of those embodiments. Alternatively, at the scheduled time, the mobile communication device may launch a component of the game to request updated content from the server.

[063] At step 310, the mobile communication device may contact the server to check for updated content to download. Contacting the server may be accomplished by using the network accessible by the mobile communication device in an embodiment. Some embodiments may contact the server over the Internet, while other embodiments may require traversing other types of networks to contact the server. In some embodiments, the server is contacted by first connecting to an interface. The interface may validate the mobile communication device as belonging to a particular service

and/or confirm that the mobile communication device is configured and/or allowed to receive updated content.

[064] Other embodiments may not contact the server unless the user has selected a game option that allows content updates. In some of those embodiments, if the user requests a content update at step 306, the request may override current settings concerning whether content updates are allowed.

[065] In some embodiments, when the mobile communication device contacts the server, the mobile communication device may send the server one or more version identification numbers for content currently on the mobile communication device. The server may use these version identification numbers to determine if the mobile communication device already has downloaded some or all of the updated content available for download. In those embodiments, sending the version identification number may help eliminate downloads of duplicative updated content. In one embodiment, the mobile communication device may execute a checksum algorithm on the version identifier (and/or compare the identifier to locally-stored data) to determine whether the updated hot spot associated with the version identifier has already been downloaded.Any known algorithm for checking whether content has previously been downloaded, thus reducing download redundancy, may be used in an embodiment.

[066] Before reaching step 312, the server in some embodiments may verify whether the mobile communication device should receive content updates before sending the updated content. To make this verification, the server may track whether the mobile communication device should receive updated content.

[067] At step 312, the mobile communication device may receive an initial message from the server. In some embodiments, this message may alert the user of available updated content and/or ask the user whether they wish to receive the updated content. For example, an embodiment may require the user to allow the updated content at step 315 in order for the content updating process to continue. The initial message, presented at step 312, may be influenced by whether the server data suggests that the mobile communication device should receive updates. For example, the initial message received at step 312 could be a message specifying that the mobile communication device is not configured to receive updated content. The initial message may also describe the features of the updated content to aid the user in deciding whether to download the content. In addition, the initial message may also specify details about the available updated content, such as file size, number of files, and/or estimated download time. In some embodiments, parameters may be set so that this presentation and/or authorization is bypassed.

[068] The initial message may also include information for use by the mobile communication device that is not displayed to the user. For example, the initial message may provide information that helps the mobile communication device to internally check what available updated content is already present on the mobile communication device. In some embodiments, this may allow the mobile communication device to present the user with only those new content features that the mobile communication device has not already implemented. In one embodiment, the mobile communication device may execute a checksum algorithm on at least a portion of the received message (and/or compare the message to locally-stored data) to

determine whether the updated content associated with the message has already been downloaded.

[069] In addition, the initial message at step 312 may be promotional in nature. For example, the message may state "X would like to redecorate this scene." Therefore, even if the user declines the update, an embodiment may still promote the third party (e.g., X) in a certain way without requiring the download. Sending a promotional initial message at step 312 may also provide the game company with a means of tracking the number of times users view promotional content. This embodiment also may allow a game company to charge the advertising third party on a per-view basis. In other words, the game company may profit for each time the promotional initial message is presented to a user at step 312.

[070] The initial message may be pre-selected based upon at least one of the factors including a type of the mobile communication device, a telecommunication service, a subscription associated with the mobile communication device, and a service provider of the telecommunication service. For example, a particular service provider may wish to provide an initial message that thanks the user of the mobile communication device for using their services. In another example, newer mobile communication devices may be able to display a more elaborate initial message, so distinguishing among types of mobile communication devices may allow a game provider to maximize the experience on each type of mobile communication device.

[071] Continuing at step 317, the mobile communication device may send a follow-up request to the server. The request may include whether or not the mobile communication device should receive the updated content. For example, if the mobile

device determines, at step 315, that it should not receive updated content, the follow-up request may alert the server to take no further action. In some embodiments, the mobile communication device may not send a follow-up request if receiving updated content is disallowed. Conversely, if receiving updated content is allowed, the follow-up request sent to the server at step 317 may include an indication that the updated content should be sent to mobile device from the server.

[072] In some embodiments, the follow-up request may specify which updated content the user wishes to download. For example, the initial message at step 312 may allow the user to select less than all of the available updated content for download. Additionally, the mobile communication device may already have some of the updated content that is available on the server, in which case the mobile communication device may not need to download that content again.

[073] In yet another embodiment, the user may specify when to download the updated content. For example, the user may wish to delay the download until some later time when the user is not placing calls, playing a game, or otherwise using the mobile communication device. The follow-up request may alert the server that the download may occur at some other time.

[074] The follow-up request may also allow the server to track the success of promotional messages. For instance, if a high percentage of users reject downloading of updated content after being presented with a particular message, the message may be ineffective.

[075] At step 320, the mobile communication device may receive updated content from the server. In some embodiments, this may occur while the game is

operating on the mobile communication device. In other embodiments, the mobile communication device may receive the updated content at some other time. As stated previously, the user may specify when the download will occur in some embodiments.

[076] In some embodiments, the mobile communication device may recognize certain files (of updated content) as already downloaded to the mobile communication device. In these embodiments, the mobile communication device may automatically bypass the repeated download of this updated content.

[077] The server may track the number of mobile communication devices that have downloaded promotional content. For example, the game company may use this information to profit from each download of a third-party advertisement.

[078] The pre-selected content may be stored on a storage medium accessible by the server. Updated content may be chosen from pre-selected content based on at least one of the factors including a type of the mobile communication device, a telecommunication service, a subscription associated with the mobile communication device, and a service provider of the telecommunication service. For example, a particular service provider may wish to provide content that includes the service provider's logo. In another example, newer mobile communication devices may be able to display a elaborate content, so distinguishing among types of mobile communication devices may allow a game provider to maximize the experience on each type of mobile communication device.

[079] At step 325, a version identifier for the received content may be saved. This identifier may be saved on the mobile communication device, the server, both, or neither, depending on the embodiment. Saving the identifier may help prevent against

downloading duplicative content updates in some embodiments. In embodiments where the server stores the version identifier, the version identifier may be stored in a database table in relation to a mobile communication device identification value. This may allow the server to verify which updated contents the mobile communication device has already received the next time the mobile device requests updated content. The identifier data may be stored on a storage medium such as described with reference to Figure 1 (e.g., storage medium 130).

[080] Similarly, in some embodiments, if the mobile device saves the version identifier locally, the mobile device may use the saved version identifier to request only different content versions. This may be achieved, as previously mentioned, by sending one or more version identifiers to the server at either step 310 or step 317, depending on the embodiment. Alternatively, the mobile communication device may compare available content identifiers received from the server with version identifiers on the mobile communication device, when analyzing which files to receive.

[081] At step 330, the mobile communication device may determine the location of the content placement. In some embodiments, the downloaded updated content includes coordinates. For example, the coordinates may specify a location along the horizontal axis of the screen and the vertical axis of the screen for placing an image. In these embodiments, the actual positioning of the updated content within the viewable screen of the mobile communication device depends on the current view of the scene in which the updated content is situated. In some embodiments, such as games with three-dimensional views, the coordinates may additionally specify a location along

a depth axis. In other embodiments, the coordinates may specify a fixed location on the screen of the mobile communication device.

[082] In some embodiments, the coordinates may also include scene, level, or time information for displaying the updated content. For example, in the darts game illustrated in Figures 2A-B, different messages may be written on chalk board 220 when the user has been playing the game for a certain amount of time or has achieved a certain score.

[083] In still more embodiments, the coordinates comprise a selection of one or more predefined in-game locations. For example, turning back to Figure 2A, a first location may be where the shirt 230 is hanging, a second location may be where poster 225 is positioned, a third location may be where the dart board 210 is placed, and so on. In that embodiment, the coordinates need only identify the pre-defined location (rather than positions along the axes) and the mobile communication device may display the updated content at that location.

[084] In other embodiments, the updated content may not include coordinates. For example, the mobile communication device may have a predefined location for placing updated content and not require further guidance from the server.

[085] In some embodiments, the placement location of updated content is determined based on user interaction. For example, in the darts game shown in Figures 2A-B, content may be placed on dart board 210 after the user throws an object at the dartboard. User interaction may be detected by motion sensing devices within the mobile communication device to determine where the updated content is displayed within the gaming environment. For example, the user may make a throwing motion

while holding the mobile communication device, which detects the motion and displays a thrown dart on dartboard 210 along with a message based upon the updated content.

[086] At step 340, the mobile communication device may place the updated content in-game. As previously stated, this may not occur until a particular scene is displayed or a particular user interaction occurs. The content may include a message, graphics, animation, and/or sound, depending on the embodiment.

[087] Some embodiments include an option for the user to remove in-game updated content, at step 350. Similarly, at step 360, the mobile communication device may restore original content to the game. For example, the user may be able to restore the scene 202 of Figure 2B to the scene 200 of Figure 2A by selecting an option within the game in some embodiments. In some embodiments, this is achieved by archiving original content on the mobile communication device. In other embodiments, original content may be archived on the server for download by the mobile communication device.

[088] Figures 4A-B are exemplary flow charts that include steps taken by a server to update in-game content on a mobile communication device in accordance with an embodiment of the present invention. Turning now to Figure 4A, the server may store updated content on a computer-readable medium in some embodiments. The computer-readable medium may be the storage medium discussed with respect to Figure 1 (i.e., storage medium 130) in some embodiments.

[089] At step 430, the server may receive a request for updated content from the mobile communication device. This request may be an inquiry regarding a particular game, scene, and/or element within the game. In some embodiments, the

request is an inquiry for updated content for multiple mobile video games. The request may also contain a version identifier that may help the server determine what updated content the mobile communication device has already downloaded. In addition, the request may allow the server to determine the type of mobile communication device, the service subscription associated with the mobile communications device, or the service provider from which the request is received.

[090] At step 450, the server may upload the content to the mobile communication device. In one embodiment, the updated content may be provided from pre-selected content based on the type of mobile communication device, the service subscription associated with the mobile communications device, or the service provider from which the request is received.

[091] Turning now to Figure 4B, a more elaborate set of steps followed by a server in some embodiments is presented. At step 410, the server may store updated content in a storage medium. In some embodiments, the updated content is indexed in a database, such as a relational database. The storage medium may be any number of types of memory or devices, such as described above with reference to Fig. 3B.

[092] At step 420, an interface may receive a request for updated content from a mobile communications device. The interface may be configured differently depending on the embodiment, and as previously discussed with respect to Figure 1.

[093] In some embodiments, the request may include one or more version identification numbers. These version identification numbers may be used by the server to determine if the mobile communication device already has some or all of the updated content available for download. In those embodiments, sending the version

identification number may help eliminate downloads of duplicative updated content. In other embodiments, no version identification is included in the request.

[094] At step 425, the interface in some embodiments may verify whether the mobile communication device should receive content updates before sending the updated content. In an embodiment, the interface verifies that the mobile communication device belongs to a particular service subscription. In another embodiment, the interface may query stored data to determine whether the mobile communication device is configured to receive updated content. If the mobile communication device is configured to receive updated content, the interface may pass the request to the server. In some embodiments, the server will receive the request without (or regardless of) any querying by the interface. In other embodiments, the verification is handled after the server receives the request.

[095] The server may receive the request at step 430. In some embodiments step 420 and 430 are combined.

[096] At step 440, the server may attempt to determine what content should be sent to the mobile communication device. For example, the determination may be based on the model type of the mobile communication device, the service plan or subscription to which the mobile device belongs, the service provider that provides the plan to the mobile device, the base location of the mobile device, the current location of the mobile device, which updates the mobile device has already received, and/or other criteria associated with the user or the mobile communications device.

[097] In an embodiment, the server uses the base location of the mobile communication device to provide localized promotional content. For example, the

server may query a database of content using the area code of the mobile communication device to promote businesses that are in or near the area code. Similarly, the mobile communication device may report its current location to the server. In some of those embodiments, the server may determine updated content to send to the mobile communication device includes promotional content for businesses near the mobile communication device's current location. The promotion content, for example, may be organized into geographical zones. Therefore, in one aspect, choosing the updated content to upload to the mobile communications device may involve determining which geographical zone the mobile communication device currently or previously belonged to.

[098] The server may also add an element of randomness to the selection of updated content in some embodiments. In these embodiments, more than one promotional item may be eligible for placement in an in-game scene or location, and the server may choose what updated content to send based at least partially on chance. In another similar embodiment, the server may send content to one or more mobile communication devices on a rotational basis. For example, if content A was previously sent to a mobile communication device, content B may be sent to the next mobile communication device to contact the server. In this way, the server may take turns selecting which content to send to a mobile communication device that requests updated content.

[099] At step 450, the updated content may be sent to the mobile communication device. The updated content may be sent immediately in some embodiments, or it may be sent at some other time. In addition, some updated content

may be sent in different download blocks. In this way, the mobile communication device may be able to display some updated content before all of the updated content is received.

[0100] The server may also track the number of times promotional content is sent, as previously mentioned.

[0101] In some embodiments, at step 460, the mobile communication device may send a confirmation to the server indicating a successful transaction. In embodiments comprising a server that tracks what updated content the mobile communication device has already received, the server may not count the updated content as received until the confirmation is returned. In some embodiments, the server receives confirmation when the last of the updated content data is transferred to the mobile communication device. In yet another embodiment, the mobile communication device chooses which content to display from a pool of content already downloaded.

[0102] Other embodiments of the invention will be apparent to those skilled in the art from consideration of the specification and practice of the invention disclosed herein. It is intended that the specification and examples be considered as exemplary only, with a true scope and spirit of the invention being indicated by the following claims.

WHAT IS CLAIMED IS:

1. A mobile communication device that provides updated content associated with a mobile video game, comprising:

a screen for viewing by the user;

a processor; and

a memory containing instructions that, when executed by the processor, cause the communications device to:

contact a server;

check for updated content for use in the mobile video game;

download the updated content to the mobile communication device from the server; and

display the updated content within the video game, the video game being presented on the screen.

2. The mobile communication device of claim 1, wherein the updated content is promotional content.

3. The mobile communication device of claim 2, wherein the promotional content is pre-selected for the mobile communication device based upon at least one of the factors including a type of mobile communication device, a telecom service associated with the mobile communication device, and a service provider of the telecom service.

4. The mobile communication device of claim 1, wherein the content is displayed within the mobile video game at a location on the screen based on user interaction with the mobile communication device.

5. The mobile communication device of claim 1, wherein checking for updated content is performed upon a request by a user of the mobile communication device.

6. The mobile communication device of clam 1, wherein checking for updated content is performed periodically.

7. The mobile communication device of claim 1, wherein the instructions further allow the mobile communication device to receive an initial message from the server prior to downloading the updated content.

8. The mobile communication device of claim 7, wherein the initial message contains information that is displayed to the user on the screen.

9. The mobile communication device of claim 7, wherein the initial message is pre-selected based upon at least one of the factors including a type of the mobile communication device, a telecommunication service, subscription associated with the mobile communication device, and a service provider of the telecommunication service.

10. The mobile communication device of claim 7, wherein the communications device sends a follow-up request to the server indicating that the user wishes to download the updated content from the server; and

the communications device downloads the updated content after sending the follow-up request.

11. The mobile communication device of claim 1, wherein the instructions further cause the mobile communication device to check whether the updated content should be downloaded before downloading the updated content from the server.

12. A computer-readable medium containing instructions for execution by a mobile communication device, the instructions causing the mobile communication device to perform a method that provides updated content associated with a mobile video game, the method comprising the steps of:

contacting a server;

checking for updated content for use in the video game;

downloading the updated content to the communications device; and

displaying the updated content within the video game, the video game being presented within a screen controlled by the mobile communication device.

13. The computer-readable medium of claim 12, wherein the updated content is promotional content.

14. The computer-readable medium of claim 13, wherein the promotional is pre-selected for the mobile communication device based upon at least one of the factors including a type of the mobile communication device, a telecom service associated with the mobile communication device, and a service provider of the telecom service.

15. A method for providing updated content to a mobile communication device for use in a mobile video game, the method comprising the steps of:

receiving a request for the updated content from the mobile communication device, the updated content being usable in the video-game that already exists on the mobile communication device;

checking what updated content to send based on one of the factors including a type of the mobile communication device, a telecom service associated with the mobile communication device, and a service provider of the telecom service; and

uploading updated content to the communications device, the content being usable when the video game operates on the communications device.

16. The method of claim 15, wherein the updated content is promotional content.

17. The method of claim 15, further comprising the step of checking whether the communications device should receive the updated content before uploading the updated content to the communications device.

18. The method of claim 15, further comprising the step of sending information to the mobile communication device as part of the updated content, the information providing an in-game placement location associated with the updated content.

19. The method of claim 15, further comprising the step of tracking what has been uploaded to the mobile communication device.

20. A system for providing updated content associated with of a mobile video game to a mobile communication device, the system comprising:

a storage medium for storing pre-selected content for use in a video game;

a server in communication with the storage medium; and

an interface coupled to the server and a network, wherein the interface receives a request for updated content from the mobile communication device over the network;

wherein the server is operative to receive the request through the interface and utilize the request to:

check what pre-selected content to send; and

send the pre-selected content stored on the storage medium to the mobile communication device as the updated content for the mobile video game.

21. The system of claim 20, wherein the updated content is promotional content.

22. The system of claim 20, wherein the server sends information to the mobile communication device regarding the in-game placement location of the content, the information being part of the updated content.

23. The system of claim 20, wherein the server sends a message to the mobile communication device in response to receiving the request, the message relating to the content.

24. The system of claim 23, wherein the message is pre-selected by the server based on a model type associated with the communications device, a service subscription associated with the communications device, or a service provider for the service subscription associated with the communications device.

25. The system of claim 20, wherein the server checks whether the mobile communication device should receive the updated content before sending the updated content to the communications device.

26. The system of claim 20, wherein the server tracks the distribution of updated content.

27. A method for selling promotional content in a mobile video game for use on a mobile communications device, comprising the steps of:

associating updated content with a third party in exchange for payment from the third party;

receiving a request for updated content from the mobile communication device; and

uploading the updated content to the mobile communication device, the updated content being displayable within the mobile video game.

28. The method of claim 27, wherein the payment is based on the number of times that the updated content is uploaded.

29. The method of claim 27, wherein the updated content is pre-selected based on the proximity of the mobile communications device to a physical location associated with the third party.

30. The method of claim 29, wherein the request is received in response to a change in the proximity of the mobile communications device to the location associated with the third party.

31. The method of claim 27, wherein payment is based on the length of time the updated content is available for download.

ABSTRACT OF THE DISCLOSURE

Systems and methods for updating content of a mobile video game allow for mobile communication devices to receive updated content for video games that operate on the devices. The updates may be promotional in nature, and may be pre-selected based on the device type, service, or service provider. The game may contain instructions that cause the mobile communication device to contact an interface and/or server to receive updated content. After the updated content is received by the mobile communication device, the content may be displayed in-game. The user of the mobile communication device may be provided with one or more options that affect the frequency or ability to receive or display updated content. In addition, the server may track what content has already been received by the mobile communication device.

PTO/SB/17 (06-07)
Approved for use through 06/30/2007. OMB 0651-0032
U.S. Patent and Trademark Office; U.S. DEPARTMENT OF COMMERCE
Under the Paperwork Reduction Act of 1995 no persons are required to respond to a collection of information unless it displays a valid OMB control number

Effective on 12/08/2004.
Fees pursuant to the Consolidated Appropriations Act, 2005 (H.R. 4818).

FEE TRANSMITTAL
For FY 2007

☐ Applicant claims small entity status. See 37 CFR 1.27

TOTAL AMOUNT OF PAYMENT ($) 1550.00

Complete if Known	
Application Number	Not Yet Assigned
Filing Date	2007 June 26
First Named Inventor	Joshua HARTWELL
Examiner Name	Not Yet Assigned
Art Unit	Not Yet Assigned
Attorney Docket No.	09685.0044-00000

METHOD OF PAYMENT (check all that apply)

☐ Check ☑ Credit Card ☐ Money Order ☐ None ☐ Other (please identify): _____

☑ Deposit Account Deposit Account Number: 06-0916 Deposit Account Name: Finnegan Henderson LLP

For the above-identified deposit account, the Director is hereby authorized to: (check all that apply)

☐ Charge fee(s) indicated below ☐ Charge fee(s) indicated below, **except for the filing fee**

☑ Charge any additional fee(s) or underpayments of fee(s) under 37 CFR 1.16 and 1.17 ☑ Credit any overpayments

WARNING: Information on this form may become public. Credit card information should not be included on this form. Provide credit card information and authorization on PTO-2038.

FEE CALCULATION

1. BASIC FILING, SEARCH, AND EXAMINATION FEES

	FILING FEES		SEARCH FEES		EXAMINATION FEES		
Application Type	**Fee ($)**	**Small Entity Fee ($)**	**Fee ($)**	**Small Entity Fee ($)**	**Fee ($)**	**Small Entity Fee ($)**	**Fees Paid ($)**
Utility	300	150	500	250	200	100	1000.00
Design	200	100	100	50	130	65	
Plant	200	100	300	150	160	80	
Reissue	300	150	500	250	600	300	
Provisional	200	100	0	0	0	0	

2. EXCESS CLAIM FEES

Fee Description	**Fee ($)**	**Small Entity Fee ($)**
Each claim over 20 (including Reissues)	50	25
Each independent claim over 3 (including Reissues)	200	100
Multiple dependent claims	360	180

Multiple Dependent Claims	
Fee ($)	**Fee Paid ($)**
$360	$0.00

Total Claims		**Extra Claims**		**Fee ($)**		**Fee Paid ($)**
27	- 20 or HP =	7	x	$50	=	$350

HP = highest number of total claims paid for, if greater than 20.

Indep. Claims		**Extra Claims**		**Fee ($)**		**Fee Paid ($)**
4	- 3 or HP =	1	x	$200	=	$200

HP = highest number of independent claims paid for, if greater than 3.

3. APPLICATION SIZE FEE

If the specification and drawings exceed 100 sheets of paper (excluding electronically filed sequence or computer listings under 37 CFR 1.52(e)), the application size fee due is $250 ($125 for small entity) for each additional 50 sheets or fraction thereof. See 35 U.S.C. 41(a)(1)(G) and 37 CFR 1.16(s).

Total Sheets		**Extra Sheets**		**Number of each additional 50 or fraction thereof**		**Fee ($)**		**Fee Paid ($)**
45	- 100 =	0	/ 50 =	0	(round **up** to a whole number) x	250.00	=	0.00

4. OTHER FEE(S)

	Fees Paid ($)
Non-English Specification, $130 fee (no small entity discount)	0.00
Other (e.g., late filing surcharge): _____	0.00

SUBMITTED BY

Signature	/Robert C. Stanley/	Registration No. (Attorney/Agent) 55,830	Telephone 404-653-6400
Name (Print/Type)	Robert C. Stanley		Date 2007 June 26

This collection of information is required by 37 CFR 1.136. The information is required to obtain or retain a benefit by the public which is to file (and by the USPTO to process) an application. Confidentiality is governed by 35 U.S.C. 122 and 37 CFR 1.14. This collection is estimated to take 30 minutes to complete, including gathering, preparing, and submitting the completed application form to the USPTO. Time will vary depending upon the individual case. Any comments on the amount of time you require to complete this form and/or suggestions for reducing this burden, should be sent to the Chief Information Officer, U.S. Patent and Trademark Office, U.S. Department of Commerce, P.O. Box 1450, Alexandria, VA 22313-1450. DO NOT SEND FEES OR COMPLETED FORMS TO THIS ADDRESS. **SEND TO: Commissioner for Patents, P.O. Box 1450, Alexandria, VA 22313-1450.**

If you need assistance in completing the form, call 1-800-PTO-9199 and select option 2.

PTO/SB/17 (06-07)
Approved for use through 06/30/2007. OMB 0651-0032
U.S. Patent and Trademark Office; U.S. DEPARTMENT OF COMMERCE
Under the Paperwork Reduction Act of 1995 no persons are required to respond to a collection of information unless it displays a valid OMB control number

Effective on 12/08/2004.
Fees pursuant to the Consolidated Appropriations Act, 2005 (H.R. 4818).

FEE TRANSMITTAL
For FY 2007

☐ Applicant claims small entity status. See 37 CFR 1.27

TOTAL AMOUNT OF PAYMENT ($) 1550.00

Complete if Known	
Application Number	Not Yet Assigned
Filing Date	2007 June 26
First Named Inventor	Joshua HARTWELL
Examiner Name	Not Yet Assigned
Art Unit	Not Yet Assigned
Attorney Docket No.	09685.0044-00000

METHOD OF PAYMENT (check all that apply)

☐ Check ☑ Credit Card ☐ Money Order ☐ None ☐ Other (please identify): _____

☑ Deposit Account Deposit Account Number: 06-0916 Deposit Account Name: Finnegan Henderson LLP

For the above-identified deposit account, the Director is hereby authorized to: (check all that apply)

☐ Charge fee(s) indicated below ☐ Charge fee(s) indicated below, **except for the filing fee**

☑ Charge any additional fee(s) or underpayments of fee(s) under 37 CFR 1.16 and 1.17 ☑ Credit any overpayments

WARNING: Information on this form may become public. Credit card information should not be included on this form. Provide credit card information and authorization on PTO-2038.

FEE CALCULATION

1. BASIC FILING, SEARCH, AND EXAMINATION FEES

	FILING FEES		SEARCH FEES		EXAMINATION FEES		
Application Type	**Fee ($)**	**Small Entity Fee ($)**	**Fee ($)**	**Small Entity Fee ($)**	**Fee ($)**	**Small Entity Fee ($)**	**Fees Paid ($)**
Utility	300	150	500	250	200	100	1000.00
Design	200	100	100	50	130	65	
Plant	200	100	300	150	160	80	
Reissue	300	150	500	250	600	300	
Provisional	200	100	0	0	0	0	

2. EXCESS CLAIM FEES

Fee Description	**Fee ($)**	**Small Entity Fee ($)**
Each claim over 20 (including Reissues)	50	25
Each independent claim over 3 (including Reissues)	200	100
Multiple dependent claims	360	180

Total Claims		**Extra Claims**		**Fee ($)**		**Fee Paid ($)**
27	- 20 or HP =	7	x	$50	=	$350

HP = highest number of total claims paid for, if greater than 20.

Indep. Claims		**Extra Claims**		**Fee ($)**		**Fee Paid ($)**
4	- 3 or HP =	1	x	$200	=	$200

HP = highest number of independent claims paid for, if greater than 3.

Multiple Dependent Claims	
Fee ($)	**Fee Paid ($)**
$360	$0.00

3. APPLICATION SIZE FEE

If the specification and drawings exceed 100 sheets of paper (excluding electronically filed sequence or computer listings under 37 CFR 1.52(e)), the application size fee due is $250 ($125 for small entity) for each additional 50 sheets or fraction thereof. See 35 U.S.C. 41(a)(1)(G) and 37 CFR 1.16(s).

Total Sheets		**Extra Sheets**		**Number of each additional 50 or fraction thereof**		**Fee ($)**		**Fee Paid ($)**
45	- 100 =	0	/ 50 =	0	(round **up** to a whole number) x	250.00	=	0.00

4. OTHER FEE(S)

	Fees Paid ($)
Non-English Specification, $130 fee (no small entity discount)	0.00
Other (e.g., late filing surcharge): _____	0.00

SUBMITTED BY

Signature	/Robert C. Stanley/	Registration No. (Attorney/Agent) 55,830	Telephone 404-653-6400
Name (Print/Type)	Robert C. Stanley		Date 2007 June 26

This collection of information is required by 37 CFR 1.136. The information is required to obtain or retain a benefit by the public which is to file (and by the USPTO to process) an application. Confidentiality is governed by 35 U.S.C. 122 and 37 CFR 1.14. This collection is estimated to take 30 minutes to complete, including gathering, preparing, and submitting the completed application form to the USPTO. Time will vary depending upon the individual case. Any comments on the amount of time you require to complete this form and/or suggestions for reducing this burden, should be sent to the Chief Information Officer, U.S. Patent and Trademark Office, U.S. Department of Commerce, P.O. Box 1450, Alexandria, VA 22313-1450. DO NOT SEND FEES OR COMPLETED FORMS TO THIS ADDRESS. **SEND TO: Commissioner for Patents, P.O. Box 1450, Alexandria, VA 22313-1450.**

If you need assistance in completing the form, call 1-800-PTO-9199 and select option 2.

Electronic Patent Application Fee Transmittal

Application Number:	
Filing Date:	
Title of Invention:	Systems and Methods for Updating In-Game Content
First Named Inventor/Applicant Name:	Joshua Hartwell
Filer:	Robert Carroll Stanley
Attorney Docket Number:	09685.0045-00000

Filed as Large Entity

Utility Filing Fees

Description	Fee Code	Quantity	Amount	Sub-Total in USD($)
Basic Filing:				
Utility application filing	1011	1	300	300
Utility Search Fee	1111	1	500	500
Utility Examination Fee	1311	1	200	200
Pages:				
Claims:				
Claims in excess of 20	1202	11	50	550
Independent claims in excess of 3	1201	2	200	400
Miscellaneous-Filing:				

Description	Fee Code	Quantity	Amount	Sub-Total in USD($)
Petition:				
Patent-Appeals-and-Interference:				
Post-Allowance-and-Post-Issuance:				
Extension-of-Time:				
Miscellaneous:				
			Total in USD ($)	**1950**

Electronic Acknowledgement Receipt

EFS ID:	1913750
Application Number:	11768892
International Application Number:	
Confirmation Number:	3817
Title of Invention:	Systems and Methods for Updating In-Game Content
First Named Inventor/Applicant Name:	Joshua Hartwell
Customer Number:	22852
Filer:	Robert Carroll Stanley
Filer Authorized By:	
Attorney Docket Number:	09685.0045-00000
Receipt Date:	26-JUN-2007
Filing Date:	
Time Stamp:	21:50:38
Application Type:	Utility

Payment information:

Submitted with Payment	yes
Payment was successfully received in RAM	$ 1950
RAM confirmation Number	3737
Deposit Account	

File Listing:

Document Number	Document Description	File Name	File Size(Bytes)	Multi Part /.zip	Pages (if appl.)

1	Transmittal of New Application	Transmittal.pdf	55008	no	1
Warnings:					
Information:					
2	Application Data Sheet	ADS.pdf	207120	no	2
Warnings:					
Information:					
This is not an USPTO supplied ADS fillable form					
3	Oath or Declaration filed	Declaration.pdf	24060	no	1
Warnings:					
Information:					
4	Drawings	0045FinalDrawings.pdf	33131	no	7
Warnings:					
Information:					
5		0045FinalApp.pdf	169373	yes	38

Multipart Description/PDF files in .zip description

Document Description	Start	End
Specification	1	30
Claims	31	37
Abstract	38	38

Warnings:					
Information:					
6	Transmittal of New Application	FeeTransmittal.pdf	58169	no	1
Warnings:					
Information:					
7	Fee Worksheet (PTO-06)	fee-info.pdf	8539	no	2
Warnings:					
Information:					

Total Files Size (in bytes):	555400

This Acknowledgement Receipt evidences receipt on the noted date by the USPTO of the indicated documents, characterized by the applicant, and including page counts, where applicable. It serves as evidence of receipt similar to a Post Card, as described in MPEP 503.

New Applications Under 35 U.S.C. 111
If a new application is being filed and the application includes the necessary components for a filing date (see 37 CFR 1.53(b)-(d) and MPEP 506), a Filing Receipt (37 CFR 1.54) will be issued in due course and the date shown on this Acknowledgement Receipt will establish the filing date of the application.

National Stage of an International Application under 35 U.S.C. 371
If a timely submission to enter the national stage of an international application is compliant with the conditions of 35 U.S.C. 371 and other applicable requirements a Form PCT/DO/EO/903 indicating acceptance of the application as a national stage submission under 35 U.S.C. 371 will be issued in addition to the Filing Receipt, in due course.

New International Application Filed with the USPTO as a Receiving Office
If a new international application is being filed and the international application includes the necessary components for an international filing date (see PCT Article 11 and MPEP 1810), a Notification of the International Application Number and of the International Filing Date (Form PCT/RO/105) will be issued in due course, subject to prescriptions concerning national security, and the date shown on this Acknowledgement Receipt will establish the international filing date of the application.

C O R R E C T E D

PTO/SB/17 (06-07)
Approved for use through 06/30/2007. OMB 0651-0032
U.S. Patent and Trademark Office; U.S. DEPARTMENT OF COMMERCE
Under the Paperwork Reduction Act of 1995 no persons are required to respond to a collection of information unless it displays a valid OMB control number

Effective on 12/08/2004.
Fees pursuant to the Consolidated Appropriations Act, 2005 (H.R. 4818).

FEE TRANSMITTAL
For FY 2007

☐ Applicant claims small entity status. See 37 CFR 1.27

TOTAL AMOUNT OF PAYMENT ($) 1950.00

Complete if Known	
Application Number	Not Yet Assigned
Filing Date	2007 June 26
First Named Inventor	Joshua HARTWELL
Examiner Name	Not Yet Assigned
Art Unit	Not Yet Assigned
Attorney Docket No.	09685.0045-00000

METHOD OF PAYMENT (check all that apply)

☐ Check ☑ Credit Card ☐ Money Order ☐ None ☐ Other (please identify): _____

☑ Deposit Account Deposit Account Number: 06-0916 Deposit Account Name: Finnegan Henderson LLP

For the above-identified deposit account, the Director is hereby authorized to: (check all that apply)

☐ Charge fee(s) indicated below ☐ Charge fee(s) indicated below, **except for the filing fee**

☑ Charge any additional fee(s) or underpayments of fee(s) under 37 CFR 1.16 and 1.17 ☑ Credit any overpayments

WARNING: Information on this form may become public. Credit card information should not be included on this form. Provide credit card information and authorization on PTO-2038.

FEE CALCULATION

1. BASIC FILING, SEARCH, AND EXAMINATION FEES

	FILING FEES		SEARCH FEES		EXAMINATION FEES		
Application Type	**Fee ($)**	**Small Entity Fee ($)**	**Fee ($)**	**Small Entity Fee ($)**	**Fee ($)**	**Small Entity Fee ($)**	**Fees Paid ($)**
Utility	300	150	500	250	200	100	1000.00
Design	200	100	100	50	130	65	
Plant	200	100	300	150	160	80	
Reissue	300	150	500	250	600	300	
Provisional	200	100	0	0	0	0	

2. EXCESS CLAIM FEES

Fee Description	**Fee ($)**	**Small Entity Fee ($)**
Each claim over 20 (including Reissues)	50	25
Each independent claim over 3 (including Reissues)	200	100
Multiple dependent claims	360	180

Total Claims		**Extra Claims**		**Fee ($)**		**Fee Paid ($)**
31	- 20 or HP =	11	x	$50	=	$550

HP = highest number of total claims paid for, if greater than 20.

Indep. Claims		**Extra Claims**		**Fee ($)**		**Fee Paid ($)**
5	- 3 or HP =	2	x	$200	=	$400

HP = highest number of independent claims paid for, if greater than 3.

Multiple Dependent Claims	
Fee ($)	**Fee Paid ($)**
$360	$0.00

3. APPLICATION SIZE FEE

If the specification and drawings exceed 100 sheets of paper (excluding electronically filed sequence or computer listings under 37 CFR 1.52(e)), the application size fee due is $250 ($125 for small entity) for each additional 50 sheets or fraction thereof. See 35 U.S.C. 41(a)(1)(G) and 37 CFR 1.16(s).

Total Sheets		**Extra Sheets**		**Number of each additional 50 or fraction thereof**		**Fee ($)**		**Fee Paid ($)**
45	- 100 =	0	/ 50 =	0	(round **up** to a whole number) x	250.00	=	0.00

4. OTHER FEE(S)

	Fees Paid ($)
Non-English Specification, $130 fee (no small entity discount)	0.00
Other (e.g., late filing surcharge): _____	0.00

SUBMITTED BY

Signature	/Robert C. Stanley/	Registration No. (Attorney/Agent) 55,830	Telephone 404-653-6400
Name (Print/Type)	Robert C. Stanley		Date 2007 June 26

This collection of information is required by 37 CFR 1.136. The information is required to obtain or retain a benefit by the public which is to file (and by the USPTO to process) an application. Confidentiality is governed by 35 U.S.C. 122 and 37 CFR 1.14. This collection is estimated to take 30 minutes to complete, including gathering, preparing, and submitting the completed application form to the USPTO. Time will vary depending upon the individual case. Any comments on the amount of time you require to complete this form and/or suggestions for reducing this burden, should be sent to the Chief Information Officer, U.S. Patent and Trademark Office, U.S. Department of Commerce, P.O. Box 1450, Alexandria, VA 22313-1450. DO NOT SEND FEES OR COMPLETED FORMS TO THIS ADDRESS. **SEND TO: Commissioner for Patents, P.O. Box 1450, Alexandria, VA 22313-1450.**

If you need assistance in completing the form, call 1-800-PTO-9199 and select option 2.

Electronic Acknowledgement Receipt

EFS ID:	1913792
Application Number:	11768892
International Application Number:	
Confirmation Number:	3817
Title of Invention:	Systems and Methods for Updating In-Game Content
First Named Inventor/Applicant Name:	Joshua Hartwell
Customer Number:	22852
Filer:	Robert Carroll Stanley
Filer Authorized By:	
Attorney Docket Number:	09685.0045-00000
Receipt Date:	26-JUN-2007
Filing Date:	
Time Stamp:	22:32:46
Application Type:	Utility

Payment information:

Submitted with Payment	no

File Listing:

Document Number	Document Description	File Name	File Size(Bytes)	Multi Part /.zip	Pages (if appl.)
1	Transmittal of New Application	CorrectedFeeTransmittal.pdf	60241	no	1
Warnings:					

Information:	
Total Files Size (in bytes):	60241

This Acknowledgement Receipt evidences receipt on the noted date by the USPTO of the indicated documents, characterized by the applicant, and including page counts, where applicable. It serves as evidence of receipt similar to a Post Card, as described in MPEP 503.

New Applications Under 35 U.S.C. 111
If a new application is being filed and the application includes the necessary components for a filing date (see 37 CFR 1.53(b)-(d) and MPEP 506), a Filing Receipt (37 CFR 1.54) will be issued in due course and the date shown on this Acknowledgement Receipt will establish the filing date of the application.

National Stage of an International Application under 35 U.S.C. 371
If a timely submission to enter the national stage of an international application is compliant with the conditions of 35 U.S.C. 371 and other applicable requirements a Form PCT/DO/EO/903 indicating acceptance of the application as a national stage submission under 35 U.S.C. 371 will be issued in addition to the Filing Receipt, in due course.

New International Application Filed with the USPTO as a Receiving Office
If a new international application is being filed and the international application includes the necessary components for an international filing date (see PCT Article 11 and MPEP 1810), a Notification of the International Application Number and of the International Filing Date (Form PCT/RO/105) will be issued in due course, subject to prescriptions concerning national security, and the date shown on this Acknowledgement Receipt will establish the international filing date of the application.

6/26/07

PTO/SB/06 (12-04)
Approved for use through 7/31/2006. OMB 0651-0032
U.S. Patent and Trademark Office; U.S. DEPARTMENT OF COMMERCE

Under the Paperwork Reduction Act of 1995, no persons are required to respond to a collection of information unless it displays a valid OMB control number.

PATENT APPLICATION FEE DETERMINATION RECORD

Substitute for Form PTO-875

11/768,892

APPLICATION AS FILED – PART I

FOR	(Column 1) NUMBER FILED	(Column 2) NUMBER EXTRA	SMALL ENTITY RATE ($)	SMALL ENTITY FEE ($)	OR	OTHER THAN SMALL ENTITY RATE ($)	OTHER THAN SMALL ENTITY FEE ($)
BASIC FEE (37 CFR 1.16(a), (b), or (c))							300
SEARCH FEE (37 CFR 1.16(k), (i), or (m))							500
EXAMINATION FEE (37 CFR 1.16(o), (p), or (q))							200
TOTAL CLAIMS (37 CFR 1.16(i))	31 minus 20 =	11	X 25=		OR	X 50=	550
INDEPENDENT CLAIMS (37 CFR 1.16(h))	5 minus 3 =	2	X 100=			X 200=	400
APPLICATION SIZE FEE (37 CFR 1.16(s))	If the specification and drawings exceed 100 sheets of paper, the application size fee due is $250 ($125 for small entity) for each additional 50 sheets or fraction thereof. See 35 U.S.C. 41(a)(1)(G) and 37 CFR 1.16(s).						
MULTIPLE DEPENDENT CLAIM PRESENT (37 CFR 1.16(j))			N/A			N/A	
* If the difference in column 1 is less than zero, enter "0" in column 2.			TOTAL			TOTAL	1950

APPLICATION AS AMENDED – PART II

AMENDMENT A

	(Column 1) CLAIMS REMAINING AFTER AMENDMENT		(Column 2) HIGHEST NUMBER PREVIOUSLY PAID FOR	(Column 3) PRESENT EXTRA	SMALL ENTITY RATE ($)	SMALL ENTITY ADDI-TIONAL FEE ($)	OR	OTHER THAN SMALL ENTITY RATE ($)	OTHER THAN SMALL ENTITY ADDI-TIONAL FEE ($)
Total (37 CFR 1.16(i))	*	Minus	**	=	x =		OR	x =	
Independent (37 CFR 1.16(h))	*	Minus	***	=	x =		OR	x =	
Application Size Fee (37 CFR 1.16(s))									
FIRST PRESENTATION OF MULTIPLE DEPENDENT CLAIM (37 CFR 1.16(j))					N/A		OR	N/A	
					TOTAL ADD'T FEE		OR	TOTAL ADD'T FEE	

AMENDMENT B

	(Column 1) CLAIMS REMAINING AFTER AMENDMENT		(Column 2) HIGHEST NUMBER PREVIOUSLY PAID FOR	(Column 3) PRESENT EXTRA	SMALL ENTITY RATE ($)	SMALL ENTITY ADDI-TIONAL FEE ($)	OR	OTHER THAN SMALL ENTITY RATE ($)	OTHER THAN SMALL ENTITY ADDI-TIONAL FEE ($)
Total (37 CFR 1.16(i))	*	Minus	**	=	x =		OR	x =	
Independent (37 CFR 1.16(h))	*	Minus	***	=	x =		OR	x =	
Application Size Fee (37 CFR 1.16(s))									
FIRST PRESENTATION OF MULTIPLE DEPENDENT CLAIM (37 CFR 1.16(j))					N/A		OR	N/A	
					TOTAL ADD'T FEE		OR	TOTAL ADD'T FEE	

* If the entry in column 1 is less than the entry in column 2, write "0" in column 3.
** If the "Highest Number Previously Paid For" IN THIS SPACE is less than 20, enter "20".
*** If the "Highest Number Previously Paid For" IN THIS SPACE is less than 3, enter "3".
The "Highest Number Previously Paid For" (Total or Independent) is the highest number found in the appropriate box in column 1.

This collection of information is required by 37 CFR 1.16. The information is required to obtain or retain a benefit by the public which is to file (and by the USPTO to process) an application. Confidentiality is governed by 35 U.S.C. 122 and 37 CFR 1.14. This collection is estimated to take 12 minutes to complete, including gathering, preparing, and submitting the completed application form to the USPTO. Time will vary depending upon the individual case. Any comments on the amount of time you require to complete this form and/or suggestions for reducing this burden, should be sent to the Chief Information Officer, U.S. Patent and Trademark Office, U.S. Department of Commerce, P.O. Box 1450, Alexandria, VA 22313-1450. DO NOT SEND FEES OR COMPLETED FORMS TO THIS ADDRESS. **SEND TO: Commissioner for Patents, P.O. Box 1450, Alexandria, VA 22313-1450.**

If you need assistance in completing the form, call 1-800-PTO-9199 and select option 2.