EXHIBIT 1002

PTO-1390 (09-11)
Approved for use through 4/30/2013. OMB 0651-0021
U.S. Patent and Trademark Office; U.S. DEPARTMENT OF COMMERCE
Under the Paperwork Reduction Act of 1995, no persons are required to respond to a collection of information unless it displays a valid OMB control number.

TRANSMITTAL LETTER TO THE UNITED STATES DESIGNATED/ELECTED OFFICE (DO/EO/US) CONCERNING A SUBMISSION UNDER 35 U.S.C. 371

ATTORNEY'S DOCKET NUMBER
006.P090

U.S. APPLICATION NO. (If known, see 37 CFR 1.5)

INTERNATIONAL APPLICATION NO.	INTERNATIONAL FILING DATE	PRIORITY DATE CLAIMED
PCT/US2011/049003	8/24/2011	8/24/2011

TITLE OF INVENTION
NETWORK COVERAGE BY CYCLING THROUGH BEAM SHAPE COVERAGE CONFIGURATIONS

APPLICANT(S) FOR DO/EO/US
Ezekiel Kruglick

Applicant herewith submits to the United States Designated/Elected Office (DO/EO/US) the following items and other information:

1. ☑ This is a **FIRST** submission of items concerning a submission under 35 U.S.C. 371.
2. ☐ This is a **SECOND** or **SUBSEQUENT** submission of items concerning a submission under 35 U.S.C. 371.
3. ☑ This is an express request to begin national examination procedures (35 U.S.C. 371(f)). The submission must include items (5), (6), (9) and (21) indicated below.
4. ☑ The US has been elected (Article 31).
5. ☑ A copy of the International Application as filed (35 U.S.C. 371(c)(2))
   a. ☐ is attached hereto (required only if not communicated by the International Bureau).
   b. ☐ has been communicated by the International Bureau.
   c. ☑ is not required, as the application was filed in the United States Receiving Office (RO/US).
6. ☐ An English language translation of the International Application as filed (35 U.S.C. 371(c)(2)).
   a. ☐ is attached hereto.
   b. ☐ has been previously submitted under 35 U.S.C. 154(d)(4).
7. ☑ Amendments to the claims of the International Application under PCT Article 19 (35 U.S.C. 371(c)(3))
   a. ☐ are attached hereto (required only if not communicated by the International Bureau).
   b. ☐ have been communicated by the International Bureau.
   c. ☑ have not been made; however, the time limit for making such amendments has NOT expired.
   d. ☐ have not been made and will not be made.
8. ☐ An English language translation of the amendments to the claims under PCT Article 19 (35 U.S.C. 371(c)(3)).
9. ☑ An oath or declaration of the inventor(s) (35 U.S.C. 371(c)(4)).
10. ☐ An English language translation of the annexes of the International Preliminary Examination Report under PCT Article 36 (35 U.S.C. 371(c)(5)).

Items 11 to 20 below concern document(s) or information included:

11. ☑ An Information Disclosure Statement under 37 CFR 1.97 and 1.98.
12. ☐ An assignment document for recording. A separate cover sheet in compliance with 37 CFR 3.28 and 3.31 is included.
13. ☐ A preliminary amendment.
14. ☑ An Application Data Sheet under 37 CFR 1.76.
15. ☐ A substitute specification.
16. ☑ A power of attorney and/or change of address letter.
17. ☐ A computer-readable form of the sequence listing in accordance with PCT Rule 13*ter*.3 and 37 CFR 1.821- 1.825.
18. ☐ A second copy of the published International Application under 35 U.S.C. 154(d)(4).
19. ☐ A second copy of the English language translation of the international application under 35 U.S.C. 154(d)(4).

This collection of information is required by 37 CFR 1.414 and 1.491-1 .492. The information is required to obtain or retain a b enefit by the public, w hich is to file (and by the USPTO to pro cess) an application . Confidentiality is governed by 35 U.S.C. 122 and 37 CFR 1.11 and 1.14. This collection is estimated to take 15 minutes to complete, including gathering information, preparing, and submitting the completed form to the USPTO. Time will vary depending upon the individual case. Any comments on the amount of time you require to complete this form and/or suggestions for reducing this burden, should be sent to the Chief Information Officer, U.S. Patent and Trademark Office, U.S. Department of Commerce, P.O. Box 1450, Alexandria, VA 22313-1450. DO NOT SEND FEE S OR COMPLE TED FORMS TO THIS ADDRESS. **SEND TO: Mail Stop PCT, Commissioner for Patents, P.O. Box 1450, Alexandria, VA 22313-1450.**

IPR2024-00135
Petitioners' Ex. 1002
Ex.1002.00001

Under the Paperwork Reduction Act of 1995, no persons are required to respond to a collection of information unless it displays a valid OMB control number.

U.S. APPLICATION NO. (if known, see 37 CFR 1.5)	INTERNATIONAL APPLICATION NO.	ATTORNEY'S DOCKET NUMBER
	PCT/US2011/049003	006.P090

20. Other items or information:

Request for Participation in the Patent Cooperation Treaty - Patent Prosecution Highway Pilot Program (3 sheets)

The following fees have been submitted	CALCULATIONS	PTO USE ONLY
21. ☑ Basic national fee (37 CFR 1.492(a))…….…….. **$380**	$ 380.00	
22. ☑ Examination fee (37 CFR 1.492(c)) If the written opinion prepared by ISA/US or the international preliminary examination report prepared by IPEA/US indicates all claims satisfy provisions of PCT Article 33(1)-(4)…….. **$0** All other situations…….**$250**	$250.00	
23. ☑ Search fee (37 CFR 1.492(b)) If the written opinion of the ISA/US or the International preliminary examination report prepared by IPEA/US indicates all claims satisfy provisions of PCT Article 33(1)-(4)…….. **$0** Search fee (37 CFR 1.445(a)(2)) has been paid on the international application to the USPTO as an International Searching Authority…….**$120** International Search Report prepared by an ISA other than the US and provided to the Office or previously communicated to the US by the IB…….. **$490** All other situations……**$620**	$ 490.00	
TOTAL OF 21, 22 and 23 =	$1,120.00	
☐ Additional fee for specification and drawings filed in paper over 100 sheets (excluding sequence listing in compliance with 37 CFR 1.821(c) or (e) in an electronic medium or computer program listing in an electronic medium) (37 CFR 1.492(j)). The fee is **$310** for each additional 50 sheets of paper or fraction thereof.		

Total Sheets	Extra Sheets	Number of each additional 50 or fraction thereof (round **up** to a whole number)	RATE	
- 100 =	/50 =		x $**310**	$

Surcharge of **$130.00** for furnishing any of the search fee, examination fee, or the oath or declaration after the date of commencement of the national stage (37 CFR 1.492(h)).	$	

CLAIMS	NUMBER FILED	NUMBER EXTRA	RATE	$	
Total claims	27 - 20 =	7	x $ **60**	$420.00	
Independent claims	5 - 3 =	2	x **$250**	$500.00	
MULTIPLE DEPENDENT CLAIM(S) (if applicable)			+ **$450**	$	
			TOTAL OF ABOVE CALCULATIONS =	$920.00	
☐ Applicant claims small entity status. See 37 CFR 1.27. Fees above are reduced by ½.					
			SUBTOTAL =	$ 920.00	
Processing fee of **$130.00** for furnishing the English translation later than 30 months from the earliest claimed priority date (37 CFR 1.492(i)). +				$	
			TOTAL NATIONAL FEE =	$ 2,040.00	
Fee for recording the enclosed assignment (37 CFR 1.21(h)). The assignment must be accompanied by an appropriate cover sheet (37 CFR 3.28, 3.31). **$40.00** per property +				$	
			TOTAL FEES ENCLOSED =	$ 2,040.00	
				Amount to be refunded:	$
				Amount to be charged	$

IPR2024-00135
Petitioners' Ex. 1002
Ex.1002.00002

Under the Paperwork Reduction Act of 1995, no persons are required to respond to a collection of information unless it displays a valid OMB control number.

a. ☐ A check in the amount of $ _____ to cover the above fees is enclosed.

b. ☐ Please charge my Deposit Account No. _____ in the amount of $ _____ to cover the above fees.

c. ☐ The Commissioner is hereby authorized to charge any additional fees which may be required, or credit any overpayment to Deposit Account No. _____.

d. ☑ Fees are to be charged to a credit card. **WARNING:** Information on this form may become public. **Credit card information should not be included on this form.** Provide credit card information and authorization on PTO-2038. The PTO-2038 should only be mailed or faxed to the USPTO. However, when paying the basic national fee, the PTO-2038 may NOT be faxed to the USPTO.

ADVISORY: If filing by EFS-Web, do **NOT** attach the PTO-2038 form as a PDF along with your EFS-Web submission. Please be advised that this is **not** recommended and by doing so your **credit card information may be displayed via PAIR**. To protect your information, it is recommended paying fees online by using the electronic payment method.

NOTE: Where an appropriate time limit under 37 CFR 1.495 has not been met, a petition to revive (37 CFR 1.137(a) or (b)) must be filed and granted to restore the International Application to pending status.

SEND ALL CORRESPONDENCE TO:

Omikron IP Law Group
Attn: Blayne D. Green
16325 Boones Ferry Road Suite 204
Lake Oswego, Oregon 97035
US

/Blayne D. Green/
SIGNATURE

Blayne D. Green
NAME

56,198
REGISTRATION NUMBER

Privacy Act Statement

The **Privacy Act of 1974 (P.L. 93-579)** requires that you be given certain information in connection with your submission of the attached form related to a patent application or patent. Accordingly, pursuant to the requirements of the Act, please be advised that: (1) the general authority for the collection of this information is 35 U.S.C. 2(b)(2); (2) furnishing of the information solicited is voluntary; and (3) the principal purpose for which the information is used by the U.S. Patent and Trademark Office is to process and/or examine your submission related to a patent application or patent. If you do not furnish the requested information, the U.S. Patent and Trademark Office may not be able to process and/or examine your submission, which may result in termination of proceedings or abandonment of the application or expiration of the patent.

The information provided by you in this form will be subject to the following routine uses:

1. The information on this form will be treated confidentially to the extent allowed under the Freedom of Information Act (5 U.S.C. 552) and the Privacy Act (5 U.S.C 552a). Records from this system of records may be disclosed to the Department of Justice to determine whether disclosure of these records is required by the Freedom of Information Act.
2. A record from this system of records may be disclosed, as a routine use, in the course of presenting evidence to a court, magistrate, or administrative tribunal, including disclosures to opposing counsel in the course of settlement negotiations.
3. A record in this system of records may be disclosed, as a routine use, to a Member of Congress submitting a request involving an individual, to whom the record pertains, when the individual has requested assistance from the Member with respect to the subject matter of the record.
4. A record in this system of records may be disclosed, as a routine use, to a contractor of the Agency having need for the information in order to perform a contract. Recipients of information shall be required to comply with the requirements of the Privacy Act of 1974, as amended, pursuant to 5 U.S.C. 552a(m).
5. A record related to an International Application filed under the Patent Cooperation Treaty in this system of records may be disclosed, as a routine use, to the International Bureau of the World Intellectual Property Organization, pursuant to the Patent Cooperation Treaty.
6. A record in this system of records may be disclosed, as a routine use, to another federal agency for purposes of National Security review (35 U.S.C. 181) and for review pursuant to the Atomic Energy Act (42 U.S.C. 218(c)).
7. A record from this system of records may be disclosed, as a routine use, to the Administrator, General Services, or his/her designee, during an inspection of records conducted by GSA as part of that agency's responsibility to recommend improvements in records management practices and programs, under authority of 44 U.S.C. 2904 and 2906. Such disclosure shall be made in accordance with the GSA regulations governing inspection of records for this purpose, and any other relevant (*i.e.*, GSA or Commerce) directive. Such disclosure shall not be used to make determinations about individuals.
8. A record from this system of records may be disclosed, as a routine use, to the public after either publication of the application pursuant to 35 U.S.C. 122(b) or issuance of a patent pursuant to 35 U.S.C. 151. Further, a record may be disclosed, subject to the limitations of 37 CFR 1.14, as a routine use, to the public if the record was filed in an application which became abandoned or in which the proceedings were terminated and which application is referenced by either a published application, an application open to public inspection or an issued patent.
9. A record from this system of records may be disclosed, as a routine use, to a Federal, State, or local law enforcement agency, if the USPTO becomes aware of a violation or potential violation of law or regulation.

PTO/SB/80 (11-08)
Approved for use through 11/30/2011. OMB 0651-0035
U.S. Patent and Trademark Office; U.S. DEPARTMENT OF COMMERCE
Under the Paperwork Reduction Act of 1995, no persons are required to respond to a collection of information unless it displays a valid OMB control number.

POWER OF ATTORNEY TO PROSECUTE APPLICATIONS BEFORE THE USPTO

I hereby revoke all previous powers of attorney given in the application identified in the attached statement under 37 CFR 3.73(b).

I hereby appoint:

☑ Practitioners associated with the Customer Number: 65638

OR

☐ Practitioner(s) named below (if more than ten patent practitioners are to be named, then a customer number must be used):

Name	Registration Number	Name	Registration Number

as attorney(s) or agent(s) to represent the undersigned before the United States Patent and Trademark Office (USPTO) in connection with any and all patent applications assigned only to the undersigned according to the USPTO assignment records or assignment documents attached to this form in accordance with 37 CFR 3.73(b).

Please change the correspondence address for the application identified in the attached statement under 37 CFR 3.73(b) to:

☑ The address associated with Customer Number: 65638

OR

☐ Firm or Individual Name			
Address			
City		State	Zip
Country			
Telephone		Email	

Assignee Name and Address:

Empire Technology Development LLC
2711 Centerville Road, Suite 400
Wilmington, Delaware 19808

A copy of this form, together with a statement under 37 CFR 3.73(b) (Form PTO/SB/96 or equivalent) is required to be filed in each application in which this form is used. The statement under 37 CFR 3.73(b) may be completed by one of the practitioners appointed in this form if the appointed practitioner is authorized to act on behalf of the assignee, and must identify the application in which this Power of Attorney is to be filed.

SIGNATURE of Assignee of Record

The individual whose signature and title is supplied below is authorized to act on behalf of the assignee

Signature		Date	6 April 2011
Name	JEROME HEWLETT	Telephone	
Title	Authorized Person		

This collection of information is required by 37 CFR 1.31, 1.32 and 1.33. The information is required to obtain or retain a benefit by the public which is to file (and by the USPTO to process) an application. Confidentiality is governed by 35 U.S.C. 122 and 37 CFR 1.11 and 1.14. This collection is estimated to take 3 minutes to complete, including gathering, preparing, and submitting the completed application form to the USPTO. Time will vary depending upon the individual case. Any comments on the amount of time you require to complete this form and/or suggestions for reducing this burden, should be sent to the Chief Information Officer, U.S. Patent and Trademark Office, U.S. Department of Commerce, P.O. Box 1450, Alexandria, VA 22313-1450. DO NOT SEND FEES OR COMPLETED FORMS TO THIS ADDRESS. **SEND TO: Commissioner for Patents, P.O. Box 1450, Alexandria, VA 22313-1450.**

If you need assistance in completing the form, call 1-800-PTO-9199 and select option 2.

Privacy Act Statement

The **Privacy Act of 1974 (P.L. 93-579)** requires that you be given certain information in connection with your submission of the attached form related to a patent application or patent. Accordingly, pursuant to the requirements of the Act, please be advised that: (1) the general authority for the collection of this information is 35 U.S.C. 2(b)(2); (2) furnishing of the information solicited is voluntary; and (3) the principal purpose for which the information is used by the U.S. Patent and Trademark Office is to process and/or examine your submission related to a patent application or patent. If you do not furnish the requested information, the U.S. Patent and Trademark Office may not be able to process and/or examine your submission, which may result in termination of proceedings or abandonment of the application or expiration of the patent.

The information provided by you in this form will be subject to the following routine uses:

1. The information on this form will be treated confidentially to the extent allowed under the Freedom of Information Act (5 U.S.C. 552) and the Privacy Act (5 U.S.C 552a). Records from this system of records may be disclosed to the Department of Justice to determine whether disclosure of these records is required by the Freedom of Information Act.
2. A record from this system of records may be disclosed, as a routine use, in the course of presenting evidence to a court, magistrate, or administrative tribunal, including disclosures to opposing counsel in the course of settlement negotiations.
3. A record in this system of records may be disclosed, as a routine use, to a Member of Congress submitting a request involving an individual, to whom the record pertains, when the individual has requested assistance from the Member with respect to the subject matter of the record.
4. A record in this system of records may be disclosed, as a routine use, to a contractor of the Agency having need for the information in order to perform a contract. Recipients of information shall be required to comply with the requirements of the Privacy Act of 1974, as amended, pursuant to 5 U.S.C. 552a(m).
5. A record related to an International Application filed under the Patent Cooperation Treaty in this system of records may be disclosed, as a routine use, to the International Bureau of the World Intellectual Property Organization, pursuant to the Patent Cooperation Treaty.
6. A record in this system of records may be disclosed, as a routine use, to another federal agency for purposes of National Security review (35 U.S.C. 181) and for review pursuant to the Atomic Energy Act (42 U.S.C. 218(c)).
7. A record from this system of records may be disclosed, as a routine use, to the Administrator, General Services, or his/her designee, during an inspection of records conducted by GSA as part of that agency's responsibility to recommend improvements in records management practices and programs, under authority of 44 U.S.C. 2904 and 2906. Such disclosure shall be made in accordance with the GSA regulations governing inspection of records for this purpose, and any other relevant (*i.e.*, GSA or Commerce) directive. Such disclosure shall not be used to make determinations about individuals.
8. A record from this system of records may be disclosed, as a routine use, to the public after either publication of the application pursuant to 35 U.S.C. 122(b) or issuance of a patent pursuant to 35 U.S.C. 151. Further, a record may be disclosed, subject to the limitations of 37 CFR 1.14, as a routine use, to the public if the record was filed in an application which became abandoned or in which the proceedings were terminated and which application is referenced by either a published application, an application open to public inspection or an issued patent.
9. A record from this system of records may be disclosed, as a routine use, to a Federal, State, or local law enforcement agency, if the USPTO becomes aware of a violation or potential violation of law or regulation.

PTO/SB/96 (07-09)
Approved for use through 07/31/2012. OMB 0651-0031
U.S. Patent and Trademark Office; U.S. DEPARTMENT OF COMMERCE
Under the Paperwork Reduction Act of 1995, no persons are required to respond to a collection of information unless it displays a valid OMB control number.

STATEMENT UNDER 37 CFR 3.73(b)

Applicant/Patent Owner: EMPIRE TECHNOLOGY DEVELOPMENT LLC

Application No./Patent No.: _____ Filed/Issue Date: November 21, 2011

Titled: NETWORK COVERAGE BY CYCLING THROUGH BEAM SHAPE COVERAGE CONFIGURATIONS

Empire Technology Development LLC, a corporation
(Name of Assignee) (Type of Assignee, e.g., corporation, partnership, university, government agency, etc.

states that it is:

1. ☒ the assignee of the entire right, title, and interest in;

2. ☐ an assignee of less than the entire right, title, and interest in
(The extent (by percentage) of its ownership interest is _____ %); or

3. ☐ the assignee of an undivided interest in the entirety of (a complete assignment from one of the joint inventors was made)

the patent application/patent identified above, by virtue of either:

A. ☐ An assignment from the inventor(s) of the patent application/patent identified above. The assignment was recorded in the United States Patent and Trademark Office at Reel _____, Frame _____, or for which a copy therefore is attached.

OR

B. ☒ A chain of title from the inventor(s), of the patent application/patent identified above, to the current assignee as follows:

1. From: Ezekiel Kruglick To: Ardent Research Corporation
The document was recorded in the United States Patent and Trademark Office at
Reel 026802, Frame 0664, or for which a copy thereof is attached.

2. From: Ardent Research Corporation To: Empire Technology Development LLC
The document was recorded in the United States Patent and Trademark Office at
Reel 026802, Frame 0672, or for which a copy thereof is attached.

3. From: _____ To: _____
The document was recorded in the United States Patent and Trademark Office at
Reel _____, Frame _____, or for which a copy thereof is attached.

☐ Additional documents in the chain of title are listed on a supplemental sheet(s).

☒ As required by 37 CFR 3.73(b)(1)(i), the documentary evidence of the chain of title from the original owner to the assignee was, or concurrently is being, submitted for recordation pursuant to 37 CFR 3.11.

[NOTE: A separate copy (*i.e.*, a true copy of the original assignment document(s)) must be submitted to Assignment Division in accordance with 37 CFR Part 3, to record the assignment in the records of the USPTO. See MPEP 302.08]

The undersigned (whose title is supplied below) is authorized to act on behalf of the assignee.

/Blayne D. Green/	11/21/2011
Signature	Date
Blayne D. Green	Attorney of Record
Printed or Typed Name	Title

This collection of information is required by 37 CFR 3.73(b). The information is required to obtain or retain a benefit by the public which is to file (and by the USPTO to process) an application. Confidentiality is governed by 35 U.S.C. 122 and 37 CFR 1.11 and 1.14. This collection is estimated to take 12 minutes to complete, including gathering, preparing, and submitting the completed application form to the USPTO. Time will vary depending upon the individual case. Any comments on the amount of time you require to complete this form and/or suggestions for reducing this burden, should be sent to the Chief Information Officer, U.S. Patent and Trademark Office, U.S. Department of Commerce, P.O. Box 1450, Alexandria, VA 22313-1450. DO NOT SEND FEES OR COMPLETED FORMS TO THIS ADDRESS. **SEND TO: Commissioner for Patents, P.O. Box 1450, Alexandria, VA 22313-1450.**

If you need assistance in completing the form, call 1-800-PTO-9199 and select option 2.

Privacy Act Statement

The **Privacy Act of 1974 (P.L. 93-579)** requires that you be given certain information in connection with your submission of the attached form related to a patent application or patent. Accordingly, pursuant to the requirements of the Act, please be advised that: (1) the general authority for the collection of this information is 35 U.S.C. 2(b)(2); (2) furnishing of the information solicited is voluntary; and (3) the principal purpose for which the information is used by the U.S. Patent and Trademark Office is to process and/or examine your submission related to a patent application or patent. If you do not furnish the requested information, the U.S. Patent and Trademark Office may not be able to process and/or examine your submission, which may result in termination of proceedings or abandonment of the application or expiration of the patent.

The information provided by you in this form will be subject to the following routine uses:

1. The information on this form will be treated confidentially to the extent allowed under the Freedom of Information Act (5 U.S.C. 552) and the Privacy Act (5 U.S.C 552a). Records from this system of records may be disclosed to the Department of Justice to determine whether disclosure of these records is required by the Freedom of Information Act.
2. A record from this system of records may be disclosed, as a routine use, in the course of presenting evidence to a court, magistrate, or administrative tribunal, including disclosures to opposing counsel in the course of settlement negotiations.
3. A record in this system of records may be disclosed, as a routine use, to a Member of Congress submitting a request involving an individual, to whom the record pertains, when the individual has requested assistance from the Member with respect to the subject matter of the record.
4. A record in this system of records may be disclosed, as a routine use, to a contractor of the Agency having need for the information in order to perform a contract. Recipients of information shall be required to comply with the requirements of the Privacy Act of 1974, as amended, pursuant to 5 U.S.C. 552a(m).
5. A record related to an International Application filed under the Patent Cooperation Treaty in this system of records may be disclosed, as a routine use, to the International Bureau of the World Intellectual Property Organization, pursuant to the Patent Cooperation Treaty.
6. A record in this system of records may be disclosed, as a routine use, to another federal agency for purposes of National Security review (35 U.S.C. 181) and for review pursuant to the Atomic Energy Act (42 U.S.C. 218(c)).
7. A record from this system of records may be disclosed, as a routine use, to the Administrator, General Services, or his/her designee, during an inspection of records conducted by GSA as part of that agency's responsibility to recommend improvements in records management practices and programs, under authority of 44 U.S.C. 2904 and 2906. Such disclosure shall be made in accordance with the GSA regulations governing inspection of records for this purpose, and any other relevant (*i.e.*, GSA or Commerce) directive. Such disclosure shall not be used to make determinations about individuals.
8. A record from this system of records may be disclosed, as a routine use, to the public after either publication of the application pursuant to 35 U.S.C. 122(b) or issuance of a patent pursuant to 35 U.S.C. 151. Further, a record may be disclosed, subject to the limitations of 37 CFR 1.14, as a routine use, to the public if the record was filed in an application which became abandoned or in which the proceedings were terminated and which application is referenced by either a published application, an application open to public inspection or an issued patent.
9. A record from this system of records may be disclosed, as a routine use, to a Federal, State, or local law enforcement agency, if the USPTO becomes aware of a violation or potential violation of law or regulation.

PTO/SB/08a (01-10)
Approved for use through 07/31/2012. OMB 0651-0031
U.S. Patent and Trademark Office; U.S. DEPARTMENT OF COMMERCE

Under the Paperwork Reduction Act of 1995, no persons are required to respond to a collection of information unless it contains a valid OMB control number.

INFORMATION DISCLOSURE STATEMENT BY APPLICANT

(Not for submission under 37 CFR 1.99)

Application Number	
Filing Date	2011-11-21
First Named Inventor	Ezekiel Kruglick
Art Unit	
Examiner Name	
Attorney Docket Number	006.P090

U.S.PATENTS Remove

Examiner Initial*	Cite No	Patent Number	Kind Code[1]	Issue Date	Name of Patentee or Applicant of cited Document	Pages,Columns,Lines where Relevant Passages or Relevant Figures Appear
	1					

If you wish to add additional U.S. Patent citation information please click the Add button. Add

U.S.PATENT APPLICATION PUBLICATIONS Remove

Examiner Initial*	Cite No	Publication Number	Kind Code[1]	Publication Date	Name of Patentee or Applicant of cited Document	Pages,Columns,Lines where Relevant Passages or Relevant Figures Appear
	1	20060223573	A1	2006-10-05	JALALI	
	2	20020137538	A1	2002-09-26	CHEN et al.	
	3	20090296663	A1	2009-12-03	WILD	
	4	20070142045	A1	2007-06-21	SENARATH, et al.	

If you wish to add additional U.S. Published Application citation information please click the Add button. Add

FOREIGN PATENT DOCUMENTS Remove

Examiner Initial*	Cite No	Foreign Document Number[3]	Country Code[2] ¡	Kind Code[4]	Publication Date	Name of Patentee or Applicant of cited Document	Pages,Columns,Lines where Relevant Passages or Relevant Figures Appear	T[5]

INFORMATION DISCLOSURE STATEMENT BY APPLICANT (Not for submission under 37 CFR 1.99)	Application Number	
	Filing Date	2011-11-21
	First Named Inventor	Ezekiel Kruglick
	Art Unit	
	Examiner Name	
	Attorney Docket Number	006.P090

	1							☐
If you wish to add additional Foreign Patent Document citation information please click the Add button							Add	
NON-PATENT LITERATURE DOCUMENTS							Remove	
Examiner Initials*	Cite No	Include name of the author (in CAPITAL LETTERS), title of the article (when appropriate), title of the item (book, magazine, journal, serial, symposium, catalog, etc), date, pages(s), volume-issue number(s), publisher, city and/or country where published.						T[5]
	1	AUSTRALIA PATENT OFFICE, International Search Report & Written Opinion of the International Searching Authority, prepared on October 31, 2011 and mailed on November 4, 2011, Australia.						☐
	2	WORTHAM, Jenna, Cellphones now used more for data than for calls, The New York Times, May 13, 2010, accessed on November 21, 2011 via http://www.nytimes.com/2010/05/14/technology/personaltech/14talk.html						☐
If you wish to add additional non-patent literature document citation information please click the Add button							Add	

EXAMINER SIGNATURE			
Examiner Signature		Date Considered	

*EXAMINER: Initial if reference considered, whether or not citation is in conformance with MPEP 609. Draw line through a citation if not in conformance and not considered. Include copy of this form with next communication to applicant.

[1] See Kind Codes of USPTO Patent Documents at www.USPTO.GOV or MPEP 901.04. [2] Enter office that issued the document, by the two-letter code (WIPO Standard ST.3). [3] For Japanese patent documents, the indication of the year of the reign of the Emperor must precede the serial number of the patent document. [4] Kind of document by the appropriate symbols as indicated on the document under WIPO Standard ST.16 if possible. [5] Applicant is to place a check mark here if English language translation is attached.

INFORMATION DISCLOSURE STATEMENT BY APPLICANT (Not for submission under 37 CFR 1.99)	Application Number	
	Filing Date	2011-11-21
	First Named Inventor	Ezekiel Kruglick
	Art Unit	
	Examiner Name	
	Attorney Docket Number	006.P090

CERTIFICATION STATEMENT

Please see 37 CFR 1.97 and 1.98 to make the appropriate selection(s):

☐ That each item of information contained in the information disclosure statement was first cited in any communication from a foreign patent office in a counterpart foreign application not more than three months prior to the filing of the information disclosure statement. See 37 CFR 1.97(e)(1).

OR

☐ That no item of information contained in the information disclosure statement was cited in a communication from a foreign patent office in a counterpart foreign application, and, to the knowledge of the person signing the certification after making reasonable inquiry, no item of information contained in the information disclosure statement was known to any individual designated in 37 CFR 1.56(c) more than three months prior to the filing of the information disclosure statement. See 37 CFR 1.97(e)(2).

☐ See attached certification statement.

☐ The fee set forth in 37 CFR 1.17 (p) has been submitted herewith.

☒ A certification statement is not submitted herewith.

SIGNATURE

A signature of the applicant or representative is required in accordance with CFR 1.33, 10.18. Please see CFR 1.4(d) for the form of the signature.

Signature	/Blayne D. Green/	Date (YYYY-MM-DD)	2011-11-21
Name/Print	Blayne D. Green	Registration Number	56198

This collection of information is required by 37 CFR 1.97 and 1.98. The information is required to obtain or retain a benefit by the public which is to file (and by the USPTO to process) an application. Confidentiality is governed by 35 U.S.C. 122 and 37 CFR 1.14. This collection is estimated to take 1 hour to complete, including gathering, preparing and submitting the completed application form to the USPTO. Time will vary depending upon the individual case. Any comments on the amount of time you require to complete this form and/or suggestions for reducing this burden, should be sent to the Chief Information Officer, U.S. Patent and Trademark Office, U.S. Department of Commerce, P.O. Box 1450, Alexandria, VA 22313-1450. DO NOT SEND FEES OR COMPLETED FORMS TO THIS ADDRESS. **SEND TO: Commissioner for Patents, P.O. Box 1450, Alexandria, VA 22313-1450.**

IPR2024-00135
Petitioners' Ex. 1002
Ex.1002.00011

Privacy Act Statement

The Privacy Act of 1974 (P.L. 93-579) requires that you be given certain information in connection with your submission of the attached form related to a patent application or patent. Accordingly, pursuant to the requirements of the Act, please be advised that: (1) the general authority for the collection of this information is 35 U.S.C. 2(b)(2); (2) furnishing of the information solicited is voluntary; and (3) the principal purpose for which the information is used by the U.S. Patent and Trademark Office is to process and/or examine your submission related to a patent application or patent. If you do not furnish the requested information, the U.S. Patent and Trademark Office may not be able to process and/or examine your submission, which may result in termination of proceedings or abandonment of the application or expiration of the patent.

The information provided by you in this form will be subject to the following routine uses:

1. The information on this form will be treated confidentially to the extent allowed under the Freedom of Information Act (5 U.S.C. 552) and the Privacy Act (5 U.S.C. 552a). Records from this system of records may be disclosed to the Department of Justice to determine whether the Freedom of Information Act requires disclosure of these record s.

2. A record from this system of records may be disclosed, as a routine use, in the course of presenting evidence to a court, magistrate, or administrative tribunal, including disclosures to opposing counsel in the course of settlement negotiations.

3. A record in this system of records may be disclosed, as a routine use, to a Member of Congress submitting a request involving an individual, to whom the record pertains, when the individual has requested assistance from the Member with respect to the subject matter of the record.

4. A record in this system of records may be disclosed, as a routine use, to a contractor of the Agency having need for the information in order to perform a contract. Recipients of information shall be required to comply with the requirements of the Privacy Act of 1974, as amended, pursuant to 5 U.S.C. 552a(m).

5. A record related to an International Application filed under the Patent Cooperation Treaty in this system of records may be disclosed, as a routine use, to the International Bureau of the World Intellectual Property Organization, pursuant to the Patent Cooperation Treaty.

6. A record in this system of records may be disclosed, as a routine use, to another federal agency for purposes of National Security review (35 U.S.C. 181) and for review pursuant to the Atomic Energy Act (42 U.S.C. 218(c)).

7. A record from this system of records may be disclosed, as a routine use, to the Administrator, General Services, or his/her designee, during an inspection of records conducted by GSA as part of that agency's responsibility to recommend improvements in records management practices and programs, under authority of 44 U.S.C. 2904 and 2906. Such disclosure shall be made in accordance with the GSA regulations governing inspection of records for this purpose, and any other relevant (i.e., GSA or Commerce) directive. Such disclosure shall not be used to make determinations about individuals.

8. A record from this system of records may be disclosed, as a routine use, to the public after either publication of the application pursuant to 35 U.S.C. 122(b) or issuance of a patent pursuant to 35 U.S.C. 151. Further, a record may be disclosed, subject to the limitations of 37 CFR 1.14, as a routine use, to the public if the record was filed in an application which became abandoned or in which the proceedings were terminated and which application is referenced by either a published application, an application open to public inspections or an issued patent.

9. A record from this system of records may be disclosed, as a routine use, to a Federal, State, or local law enforcement agency, if the USPTO becomes aware of a violation or potential violation of law or regulation.

PATENT COOPERATION TREATY

From the INTERNATIONAL SEARCHING AUTHORITY

CONFIRMATION

To:

Blayne D. Green
Omikron IP Law Group
16325 Boones Ferry Rd Suite 204
Lake Oswego, Oregon, 97035
United States of America

PCT

NOTIFICATION OF TRANSMITTAL OF THE INTERNATIONAL SEARCH REPORT AND THE WRITTEN OPINION OF THE INTERNATIONAL SEARCHING AUTHORITY, OR THE DECLARATION

(PCT Rule 44.1)

	Date of mailing *(day/month/year)* 4 NOVEMBER 2011
Applicant's or agent's file reference 006.PCT090	**FOR FURTHER ACTION** See paragraphs 1 and 4 below
International application No. **PCT/US2011/049003**	International filing date *(day/month/year)* 24 August 2011
Applicant EMPIRE TECHNOLOGY DEVELOPMENT LLC et al.	

1. [X] The applicant is hereby notified that the international search report and the written opinion of the International Searching Authority have been established and are transmitted herewith.
Filing of amendments and statement under Article 19:
The applicant is entitled, if he so wishes, to amend the claims of the international application (see Rule 46):
When? The time limit for filing such amendments is normally two months from the date of transmittal of the international search report.
Where? Directly to the International Bureau of WIPO, 34 chemin des Colombettes 1211 Geneva 20, Switzerland, Facsimile No.: +41 22 338 82 70
For more detailed instructions, see *PCT Applicant's Guide*, International Phase, paragraphs 9.004 – 9.011 .

2. [ ] The applicant is hereby notified that no international search report will be established and that the declaration under Article 17(2)(a) to that effect and the written opinion of the International Searching Authority are transmitted herewith.

3. [ ] **With regard to any protest** against payment of (an) additional fee(s) under Rule 40.2, the applicant is notified that:
   - [ ] the protest together with the decision thereon has been transmitted to the International Bureau together with the applicant's request to forward the texts of both the protest and the decision thereon to the designated Offices.
   - [ ] no decision has been made yet on the protest; the applicant will be notified as soon as a decision is made.

4. **Reminders**

The applicant may submit comments on an informal basis on the written opinion of the International Searching Authority to the International Bureau. The International Bureau will send a copy of such comments to all designated Offices unless an international preliminary examination report has been or is to be established. Following the expiration of 30 months from the priority date, these comments will also be made available to the public.

Shortly after the expiration of **18 months** from the priority date, the international application will be published by the International Bureau. If the applicant wishes to avoid or postpone publication, a notice of withdrawal of the international application, or of the priority claim, must reach the International Bureau before the completion of the technical preparations for international publication (Rules 90*bis*.1 and 90*bis*.3).

Within **19 months** from the priority date, but only in respect of some designated Offices, a demand for international preliminary examination must be filed if the applicant wishes to postpone the entry into the national phase **until 30 months** from the priority date (in some Offices even later); otherwise, the applicant must, **within 20 months** from the priority date, perform the prescribed acts for entry into the national phase before those designated Offices.

In respect of other designated Offices, the time limit of **30 months** (or later) will apply even if no demand is filed within 19 months.

For details about the applicable time limits, Office by Office, see www.wipo.int/pct/en/texts/time_limits.html and the *PCT Applicant's Guide*, National Chapters.

Name and mailing address of the ISA/AU AUSTRALIAN PATENT OFFICE PO BOX 200, WODEN ACT 2606, AUSTRALIA E-mail address: pct@ipaustralia.gov.au Facsimile No. +61 2 6283 7999	Authorized officer **PRADNYA SATARKAR** AUSTRALIAN PATENT OFFICE (ISO 9001 Quality Certified Service) Telephone No. +61 2 6283 2751

RECEIVED NOV 17 2011

By _____

Form PCT/ISA/220 (July 2010)

(See notes on accompanying sheet)

PATENT COOPERATION TREATY

PCT

INTERNATIONAL SEARCH REPORT

(PCT Article 18 and Rules 43 and 44)

Applicant's or agent's file reference 006.PCT090	**FOR FURTHER ACTION**	see Form PCT/ISA/220 as well as, where applicable, item 5 below.
International application No. **PCT/US2011/049003**	International filing date *(day/month/year)* 24 August 2011	(Earliest) Priority Date *(day/month/year)* 24 August 2011
Applicant EMPIRE TECHNOLOGY DEVELOPMENT LLC et al.		

This international search report has been prepared by this International Searching Authority and is transmitted to the applicant according to Article 18. A copy is being transmitted to the International Bureau.

This international search report consists of a total of 4 sheets.

☐ It is also accompanied by a copy of each prior art document cited in this report.

1. **Basis of the report**

a. With regard to the **language,** the international search was carried out on the basis of:

☒ The international application in the language in which it was filed.

☐ A translation of the international application into , which is the language of a translation furnished for the purposes of international search (Rules 12.3(a) and 23.1(b)).

b. ☐ This international search report has been established taking into account the **rectification of an obvious mistake** authorized by or notified to this Authority under Rule 91 (Rule 43.6*bis*(a)).

c. ☐ With regard to any **nucleotide and/or amino acid sequence** disclosed in the international application, see Box No. I.

2. ☐ **Certain claims were found unsearchable** (See Box No. II).

3. ☐ **Unity of invention is lacking** (See Box No. III).

4. With regard to the **title,**

☒ the text is approved as submitted by the applicant.

☐ the text has been established by this Authority to read as follows:

5. With regard to the **abstract,**

☐ the text is approved as submitted by the applicant.

☒ the text has been established, according to Rule 38.2, by this Authority as it appears in Box No. IV. The applicant may, within one month from the date of mailing of this international search report, submit comments to this Authority.

6. With regard to the **drawings,**

a. the figure of the **drawings** to be published with the abstract is Figure No. **1B**

☐ as suggested by the applicant.

☒ as selected by this Authority, because the applicant failed to suggest a figure.

☐ as selected by this Authority, because this figure better characterizes the invention.

b. ☐ none of the figures is to be published with the abstract.

RECEIVED
NOV 17 2011
By

IPR2024-00135
Petitioners' Ex. 1002
Ex.1002.00014

INTERNATIONAL SEARCH REPORT

International application No.
PCT/US2011/049003

Box No. IV Text of the Abstract (Continuation of item 5 of the first sheet)

The methods for providing network coverage for a group of devices may include cycling over time through a coverage sequence that includes providing a first coverage configuration and providing a second coverage configuration. Providing the first coverage configuration may include transmitting a first beam of a first network that may be configured to provide coverage for the group of devices. Providing the second coverage configuration may include transmitting a second beam of the first network that may be narrower than the first beam and configured to provide coverage to at least one continuous use device of the group of devices, and providing coverage by a second network to a plurality of interval use devices of the group of devices.

INTERNATIONAL SEARCH REPORT

International application No.
PCT/US2011/049003

A. CLASSIFICATION OF SUBJECT MATTER

Int. Cl.

H04W 28/16 (2009.01) ***H04W 16/24*** (2009.01)

According to International Patent Classification (IPC) or to both national classification and IPC

B. FIELDS SEARCHED

Minimum documentation searched (classification system followed by classification symbols)

Documentation searched other than minimum documentation to the extent that such documents are included in the fields searched

Electronic data base consulted during the international search (name of data base and, where practicable, search terms used)
EPOQUE, WPI, Google Patents: Keywords (Wireless, network, coverage, cycling, continuous use, narrow, wide, beam, power, saving, improve, battery life) and similar terms

C. DOCUMENTS CONSIDERED TO BE RELEVANT

Category*	Citation of document, with indication, where appropriate, of the relevant passages	Relevant to claim No.
A	US 2006/0223573 A1 (JALALI) 05 October 2006 (Paragraphs [0051-0052], figure 4)	
A	US 2002/0137538 A1 (CHEN et al.) 26 September 2002 (Abstract)	

☐ Further documents are listed in the continuation of Box C ☒ See patent family annex

* Special categories of cited documents:

"A" document defining the general state of the art which is not considered to be of particular relevance

"E" earlier application or patent but published on or after the international filing date

"L" document which may throw doubts on priority claim(s) or which is cited to establish the publication date of another citation or other special reason (as specified)

"O" document referring to an oral disclosure, use, exhibition or other means

"P" document published prior to the international filing date but later than the priority date claimed

"T" later document published after the international filing date or priority date and not in conflict with the application but cited to understand the principle or theory underlying the invention

"X" document of particular relevance; the claimed invention cannot be considered novel or cannot be considered to involve an inventive step when the document is taken alone

"Y" document of particular relevance; the claimed invention cannot be considered to involve an inventive step when the document is combined with one or more other such documents, such combination being obvious to a person skilled in the art

"&" document member of the same patent family

Date of the actual completion of the international search	Date of mailing of the international search report
31 October 2011	4 NOVEMBER 2011
Name and mailing address of the ISA/AU	Authorized officer
AUSTRALIAN PATENT OFFICE PO BOX 200, WODEN ACT 2606, AUSTRALIA E-mail address: pct@ipaustralia.gov.au Facsimile No. +61 2 6283 7999	**PRADNYA SATARKAR** AUSTRALIAN PATENT OFFICE (ISO 9001 Quality Certified Service) Telephone No : +61 2 6283 2751

Form PCT/ISA/210 (second sheet) (July 2009)

INTERNATIONAL SEARCH REPORT

Information on patent family members

International application No.
PCT/US2011/049003

This Annex lists the known "A" publication level patent family members relating to the patent documents cited in the above-mentioned international search report. The Australian Patent Office is in no way liable for these particulars which are merely given for the purpose of information.

Patent Document Cited in Search Report		Patent Family Member					
US	2006223573	CN	101341771	EP	1869943	JP	2008535404
		KR	20070116161	US	7379750	US	2008220808
		US	7684802	WO	2006105300		
US	2002137538	AU	2002309505	BR	0208311	CN	1593020
		EP	1382132	HK	1073021	JP	2005509309
		US	7340279	WO	02078372		

Due to data integration issues this family listing may not include 10 digit Australian applications filed since May 2001.

END OF ANNEX

PATENT COOPERATION TREATY

From the:
INTERNATIONAL SEARCHING AUTHORITY

To:

Blayne D. Green
Omikron IP Law Group
16325 Boones Ferry Rd Suite 204
Lake Oswego, Oregon, 97035
United States of America

PCT

WRITTEN OPINION OF THE
INTERNATIONAL SEARCHING AUTHORITY

(PCT Rule 43*bis*.1)

Date of mailing
(day/month/year) 4 NOVEMBER 2011

FOR FURTHER ACTION
See paragraph 2 below

Applicant's or agent's file reference
006.PCT090

International application No.	International filing date *(day/month/year)*	Priority date *(day/month/year)*
PCT/US2011/049003	24 August 2011	24 August 2011

International Patent Classification (IPC) or both national classification and IPC
Int. Cl.

H04W 28/16 (2009.01) ***H04W 16/24*** (2009.01)

Applicant
EMPIRE TECHNOLOGY DEVELOPMENT LLC et al.

1. This opinion contains indications relating to the following items:

- [X] Box No. I — Basis of the opinion
- [ ] Box No. II — Priority
- [ ] Box No. III — Non-establishment of opinion with regard to novelty, inventive step and industrial applicability
- [ ] Box No. IV — Lack of unity of invention
- [X] Box No. V — Reasoned statement under Rule 43*bis*.1(a)(i) with regard to novelty, inventive step and industrial applicability; citations and explanations supporting such statement
- [ ] Box No. VI — Certain documents cited
- [ ] Box No. VII — Certain defects in the international application
- [ ] Box No. VIII — Certain observations on the international application

2. **FURTHER ACTION**

If a demand for international preliminary examination is made, this opinion will be considered to be a written opinion of the International Preliminary Examining Authority ("IPEA") except that this does not apply where the applicant chooses an Authority other than this one to be the IPEA and the chosen IPEA has notified the International Bureau under Rule 66.1*bis*(b) that written opinions of this International Searching Authority will not be so considered.

If this opinion is, as provided above, considered to be a written opinion of the IPEA, the applicant is invited to submit to the IPEA a written reply together, where appropriate, with amendments, before the expiration of 3 months from the date of mailing of Form PCT/ISA/220 or before the expiration of 22 months from the priority date, whichever expires later.

For further options, see Form PCT/ISA/220.

Name and mailing address of the ISA	Date of completion of this opinion	Authorized Officer
AUSTRALIAN PATENT OFFICE PO BOX 200, WODEN ACT 2606, AUSTRALIA E-mail address: pct@ipaustralia.gov.au Facsimile No. +61 2 6283 7999	31 October 2011	**PRADNYA SATARKAR** AUSTRALIAN PATENT OFFICE (ISO 9001 Quality Certified Service) Telephone No. +61 2 6283 2751

RECEIVED
NOV 17 2011
By

Form PCT/ISA/237 (Cover sheet) (July 2011)

WRITTEN OPINION OF THE INTERNATIONAL SEARCHING AUTHORITY

International application No.

PCT/US2011/049003

Box No. I **Basis of this opinion**

1. With regard to the **language,** this opinion has been established on the basis of:

   [X] The international application in the language in which it was filed

   [ ] A translation of the international application into, , which is the language of a translation furnished for the purposes of international search (under Rules 12.3(a) and 23.1(b)).

2. [ ] This opinion has been established taking into account **the rectification of an obvious mistake** authorized by or notified to this Authority under Rule 91 (Rule 43*bis*.1(a))

3. With regard to any **nucleotide and/or amino acid sequence** disclosed in the international application, this opinion has been established on the basis of a sequence listing filed or furnished:

   a. (means)

   [ ] on paper

   [ ] in electronic form

   b. (time)

   [ ] in the international application as filed

   [ ] together with the international application in electronic form

   [ ] subsequently to this Authority for the purposes of search

4. [ ] In addition, in the case that more than one version or copy of a sequence listing has been filed or furnished, the required statements that the information in the subsequent or additional copies is identical to that in the application as filed or does not go beyond the application as filed, as appropriate, were furnished.

5. Additional comments:

IPR2024-00135
Petitioners' Ex. 1002
Ex.1002.00019

WRITTEN OPINION OF THE INTERNATIONAL SEARCHING AUTHORITY

International application No.

PCT/US2011/049003

Box No. V **Reasoned statement under Rule 43*bis*.1(a)(i) with regard to novelty, inventive step or industrial applicability; citations and explanations supporting such statement**

1. Statement

Novelty (N)	Claims **1-27**	**YES**
	Claims **NONE**	**NO**
Inventive step (IS)	Claims **1-27**	**YES**
	Claims **NONE**	**NO**
Industrial applicability (IA)	Claims **1-27**	**YES**
	Claims **NONE**	**NO**

2. Citations and explanations:

The following documents identified in the International Search Report have been considered for the purposes of this report:

(D1): US 2006/0223573 A1 (JALALI) 05 October 2006
(D2): US 2002/0137538 A1 (CHEN et al.) 26 September 2002

NOVELTY (N)

D1, the closest prior art document discloses network coverage for a group of devices in an area (Figure 4) comprising providing a first coverage configuration and providing a second coverage configuration (Paragraph [0051]), wherein: providing the first coverage configuration includes transmitting a first beam of a first network that is configured to provide coverage for the group of devices; and providing the second coverage configuration includes transmitting a second beam of the first network that is narrower than the first beam (Paragraph [0052]). However, D1 fails to disclose that the network coverage cycles over time through a coverage sequence and also that the second coverage provides coverage to at least one continuous use device of the group of devices, and providing coverage by a second network to a plurality of interval use devices of the group of devices.
Therefore the subject matter of all the claims **1-27** is new and meets the requirements of Article 33(2) of the PCT with regard to novelty.

INVENTIVE STEP (IS)

The invention defined in claims 1-27 is not obvious in the light of any of the cited documents nor is it disclosed in any obvious combination of them especially the features of 'the network coverage cycling over time through a coverage sequence and also that the second coverage providing coverage to at least one continuous use device of the group of devices, and providing coverage by a second network to a plurality of interval use devices of the group of devices' are not disclosed.
It is also considered that these features would not be obvious to a person skilled in the art in the light of common general knowledge either by itself or in combination with any of these documents.
Therefore the subject matter of claims **1-27** is not obvious and meets the requirements of Article 33(3) of the PCT with regard to inventive step.

INDUSTRIAL APPLICABILITY (IA)

The invention defined in claims **1-27** is considered to meet the requirements of Industrial Applicability under Article 33(4) of the PCT because it can be made by, or used in, industry.

IPR2024-00135
Petitioners' Ex. 1002
Ex.1002.00020

Electronic Patent Application Fee Transmittal

Application Number:	
Filing Date:	
Title of Invention:	NETWORK COVERAGE BY CYCLING THROUGH BEAM SHAPE COVERAGE CONFIGURATIONS
First Named Inventor/Applicant Name:	Ezekiel Kruglick
Filer:	Blayne Donnis Green/Lindsey Hunt
Attorney Docket Number:	006.P090

Filed as Large Entity

U.S. National Stage under 35 USC 371 Filing Fees

Description	Fee Code	Quantity	Amount	Sub-Total in USD($)
Basic Filing:				
National Stage Fee	1631	1	380	380
Natl Stage Search Fee - Report provided	1642	1	490	490
National Stage Exam - all other cases	1633	1	250	250
Pages:				
Claims:				
Claims in excess of 20	1615	7	60	420
Independent claims in excess of 3	1614	2	250	500
Miscellaneous-Filing:				

Description	Fee Code	Quantity	Amount	Sub-Total in USD($)
Petition:				
Patent-Appeals-and-Interference:				
Post-Allowance-and-Post-Issuance:				
Extension-of-Time:				
Miscellaneous:				
			Total in USD ($)	**2040**

Electronic Acknowledgement Receipt

EFS ID:	11457621
Application Number:	13321792
International Application Number:	PCT/US11/49003
Confirmation Number:	5874
Title of Invention:	NETWORK COVERAGE BY CYCLING THROUGH BEAM SHAPE COVERAGE CONFIGURATIONS
First Named Inventor/Applicant Name:	Ezekiel Kruglick
Customer Number:	65638
Filer:	Blayne Donnis Green/Lindsey Hunt
Filer Authorized By:	Blayne Donnis Green
Attorney Docket Number:	006.P090
Receipt Date:	21-NOV-2011
Filing Date:	
Time Stamp:	18:09:55
Application Type:	U.S. National Stage under 35 USC 371

Payment information:

Submitted with Payment	yes
Payment Type	Credit Card
Payment was successfully received in RAM	$2040
RAM confirmation Number	5996
Deposit Account	
Authorized User	

File Listing:

Document Number	Document Description	File Name	File Size(Bytes)/ Message Digest	Multi Part /.zip	Pages (if appl.)

1	Application Data Sheet	ADS_006_P090.pdf	1031217 043f4be8c0a608412abfe5b4e91cee690d4babd2	no	4
Warnings:					
Information:					
2	Documents submitted with 371 Applications	Copy_ISR_WO_006_P090.pdf	941358 7eef34d7b379c783210f98626075dac4d0f5a344	no	8
Warnings:					
Information:					
3	Oath or Declaration filed	Declaration_006_P090.pdf	334953 ce2f4f6f65ea7d4dc2de2289265467a6bfe3b7e8	no	4
Warnings:					
Information:					
4	Petition to make Special under PCT-Patent Pros Hwy	PCT_PPH_006_P090.pdf	665180 eb863505e4ae8849d3f1d485d5087e8e658ea0c2	no	3
Warnings:					
Information:					
5	Power of Attorney	POA_Empire_Tech_Dev_LLC.pdf	915749 487fef034378eb2a061ecf459bfe21854fe489a1	no	2
Warnings:					
Information:					
6	Assignee showing of ownership per 37 CFR 3.73(b).	Statement_373b_006_P090.pdf	426925 21c9c4208523c64bf05430e5eb48f4620524bb69	no	2
Warnings:					
Information:					
7	Transmittal of New Application	Transmittal_006_P090.pdf	245715 69bacd68adbc2ccaab58a091d7624f3175509481	no	4
Warnings:					
Information:					
8	Information Disclosure Statement (IDS) Form (SB08)	IDS_006_P090.pdf	612271 82f5e39f3dc1ba4e18848d56755a48e35b479d56	no	4
Warnings:					
Information:					
9	Non Patent Literature	NPL_1.pdf	941358 103285707181d8b9c74ebc24a310cc7906854798	no	8
Warnings:					
Information:					

10	Non Patent Literature	NPL_2.pdf	436569 6b086d4ff7af6fc40dccc1ea2190722f3b0b1aff	no	3
Warnings:					
Information:					
11	Fee Worksheet (SB06)	fee-info.pdf	38579 c2504b54258ed60df444da1c13febf6a051dea56	no	2
Warnings:					
Information:					
			Total Files Size (in bytes):	6589874	

This Acknowledgement Receipt evidences receipt on the noted date by the USPTO of the indicated documents, characterized by the applicant, and including page counts, where applicable. It serves as evidence of receipt similar to a Post Card, as described in MPEP 503.

<u>New Applications Under 35 U.S.C. 111</u>
If a new application is being filed and the application includes the necessary components for a filing date (see 37 CFR 1.53(b)-(d) and MPEP 506), a Filing Receipt (37 CFR 1.54) will be issued in due course and the date shown on this Acknowledgement Receipt will establish the filing date of the application.

<u>National Stage of an International Application under 35 U.S.C. 371</u>
If a timely submission to enter the national stage of an international application is compliant with the conditions of 35 U.S.C. 371 and other applicable requirements a Form PCT/DO/EO/903 indicating acceptance of the application as a national stage submission under 35 U.S.C. 371 will be issued in addition to the Filing Receipt, in due course.

<u>New International Application Filed with the USPTO as a Receiving Office</u>
If a new international application is being filed and the international application includes the necessary components for an international filing date (see PCT Article 11 and MPEP 1810), a Notification of the International Application Number and of the International Filing Date (Form PCT/RO/105) will be issued in due course, subject to prescriptions concerning national security, and the date shown on this Acknowledgement Receipt will establish the international filing date of the application.

PTO/SB/14 (11-08)
Approved for use through 09/30/2010. OMB 0651-0032
U.S. Patent and Trademark Office; U.S. DEPARTMENT OF COMMERCE
Under the Paperwork Reduction Act of 1995, no persons are required to respond to a collection of information unless it contains a valid OMB control number.

Application Data Sheet 37 CFR 1.76	Attorney Docket Number	006.P090
	Application Number	
Title of Invention	NETWORK COVERAGE BY CYCLING THROUGH BEAM SHAPE COVERAGE CONFIGURATIONS	

The application data sheet is part of the provisional or nonprovisional application for which it is being submitted. The following form contains the bibliographic data arranged in a format specified by the United States Patent and Trademark Office as outlined in 37 CFR 1.76.
This document may be completed electronically and submitted to the Office in electronic format using the Electronic Filing System (EFS) or the document may be printed and included in a paper filed application.

Secrecy Order 37 CFR 5.2

☐ Portions or all of the application associated with this Application Data Sheet may fall under a Secrecy Order pursuant to 37 CFR 5.2 (Paper filers only. Applications that fall under Secrecy Order may not be filed electronically.)

Applicant Information:

Applicant 1 Remove

Applicant Authority ◉ Inventor ◯ Legal Representative under 35 U.S.C. 117 ◯ Party of Interest under 35 U.S.C. 118

Prefix	Given Name	Middle Name	Family Name	Suffix
	Ezekiel		Kruglick	

Residence Information (Select One) ◉ US Residency ◯ Non US Residency ◯ Active US Military Service

City	Poway	State/Province	CA	Country of Residence i	US

Citizenship under 37 CFR 1.41(b) i US

Mailing Address of Applicant:

Address 1	13842 Deergrass Ct.		
Address 2			
City	Poway	State/Province	CA
Postal Code	92064	Country i	US

All Inventors Must Be Listed - Additional Inventor Information blocks may be generated within this form by selecting the **Add** button. Add

Correspondence Information:

Enter either Customer Number or complete the Correspondence Information section below.
For further information see 37 CFR 1.33(a).

☐ **An Address is being provided for the correspondence Information of this application.**

Customer Number	65638		
Email Address	blayne.green@omikronlaw.com	Add Email	Remove Email
Email Address	robert.chang@omikronlaw.com	Add Email	Remove Email

PTO/SB/14 (11-08)
Approved for use through 09/30/2010. OMB 0651-0032
U.S. Patent and Trademark Office; U.S. DEPARTMENT OF COMMERCE
Under the Paperwork Reduction Act of 1995, no persons are required to respond to a collection of information unless it contains a valid OMB control number.

Application Data Sheet 37 CFR 1.76	Attorney Docket Number	006.P090
	Application Number	
Title of Invention	NETWORK COVERAGE BY CYCLING THROUGH BEAM SHAPE COVERAGE CONFIGURATIONS	

Application Information:

Title of the Invention	NETWORK COVERAGE BY CYCLING THROUGH BEAM SHAPE COVERAGE CONFIGURATIONS		
Attorney Docket Number	006.P090	**Small Entity Status Claimed** ☐	
Application Type	Nonprovisional		
Subject Matter			
Suggested Class (if any)		**Sub Class (if any)**	
Suggested Technology Center (if any)			
Total Number of Drawing Sheets (if any)	7	**Suggested Figure for Publication (if any)**	

Publication Information:

☐ Request Early Publication (Fee required at time of Request 37 CFR 1.219)

☐ **Request Not to Publish.** I hereby request that the attached application not be published under 35 U.S. C. 122(b) and certify that the invention disclosed in the attached application **has not and will not** be the subject of an application filed in another country, or under a multilateral international agreement, that requires publication at eighteen months after filing.

Representative Information:

Representative information should be provided for all practitioners having a power of attorney in the application. Providing this information in the Application Data Sheet does not constitute a power of attorney in the application (see 37 CFR 1.32).
Enter either Customer Number or complete the Representative Name section below. If both sections are completed the Customer Number will be used for the Representative Information during processing.

Please Select One:	◉ Customer Number	◯ US Patent Practitioner	◯ Limited Recognition (37 CFR 11.9)
Customer Number	65638		

Domestic Benefit/National Stage Information:

This section allows for the applicant to either claim benefit under 35 U.S.C. 119(e), 120, 121, or 365(c) or indicate National Stage entry from a PCT application. Providing this information in the application data sheet constitutes the specific reference required by 35 U.S.C. 119(e) or 120, and 37 CFR 1.78(a)(2) or CFR 1.78(a)(4), and need not otherwise be made part of the specification.

Prior Application Status	Pending		Remove
Application Number	Continuity Type	Prior Application Number	Filing Date (YYYY-MM-DD)
	a 371 of international	PCT/US2011/049003	2011-08-24

Additional Domestic Benefit/National Stage Data may be generated within this form by selecting the **Add** button. Add

Foreign Priority Information:

This section allows for the applicant to claim benefit of foreign priority and to identify any prior foreign application for which priority is not claimed. Providing this information in the application data sheet constitutes the claim for priority as required by 35 U.S.C. 119(b) and 37 CFR 1.55(a).

PTO/SB/14 (11-08)
Approved for use through 09/30/2010. OMB 0651-0032
U.S. Patent and Trademark Office; U.S. DEPARTMENT OF COMMERCE
Under the Paperwork Reduction Act of 1995, no persons are required to respond to a collection of information unless it contains a valid OMB control number.

Application Data Sheet 37 CFR 1.76	Attorney Docket Number	006.P090
	Application Number	
Title of Invention	NETWORK COVERAGE BY CYCLING THROUGH BEAM SHAPE COVERAGE CONFIGURATIONS	

Remove

Application Number	Country [i]	Parent Filing Date (YYYY-MM-DD)	Priority Claimed
			○ Yes ◉ No

Additional Foreign Priority Data may be generated within this form by selecting the **Add** button. Add

Assignee Information:

Providing this information in the application data sheet does not substitute for compliance with any requirement of part 3 of Title 37 of the CFR to have an assignment recorded in the Office.

Assignee 1 Remove

If the Assignee is an Organization check here. ☒

Organization Name	EMPIRE TECHNOLOGY DEVELOPMENT LLC		
Mailing Address Information:			
Address 1	2711 Centerville Road, Suite 400		
Address 2			
City	Wilmington	**State/Province**	DE
Country [i]	US	Postal Code	19808
Phone Number		Fax Number	
Email Address			

Additional Assignee Data may be generated within this form by selecting the **Add** button. Add

Signature:

A signature of the applicant or representative is required in accordance with 37 CFR 1.33 and 10.18. Please see 37 CFR 1.4(d) for the form of the signature.

Signature	/Blayne D. Green/			Date (YYYY-MM-DD)	2011-11-21
First Name	Blayne	Last Name	Green	Registration Number	56198

This collection of information is required by 37 CFR 1.76. The information is required to obtain or retain a benefit by the public which is to file (and by the USPTO to process) an application. Confidentiality is governed by 35 U.S.C. 122 and 37 CFR 1.14. This collection is estimated to take 23 minutes to complete, including gathering, preparing, and submitting the completed application data sheet form to the USPTO. Time will vary depending upon the individual case. Any comments on the amount of time you require to complete this form and/or suggestions for reducing this burden, should be sent to the Chief Information Officer, U.S. Patent and Trademark Office, U.S. Department of Commerce, P.O. Box 1450, Alexandria, VA 22313-1450. DO NOT SEND FEES OR COMPLETED FORMS TO THIS ADDRESS. **SEND TO: Commissioner for Patents, P.O. Box 1450, Alexandria, VA 22313-1450.**

IPR2024-00135
Petitioners' Ex. 1002
Ex.1002.00028

Privacy Act Statement

The Privacy Act of 1974 (P.L. 93-579) requires that you be given certain information in connection with your submission of the attached form related to a patent application or patent. Accordingly, pursuant to the requirements of the Act, please be advised that: (1) the general authority for the collection of this information is 35 U.S.C. 2(b)(2); (2) furnishing of the information solicited is voluntary; and (3) the principal purpose for which the information is used by the U.S. Patent and Trademark Office is to process and/or examine your submission related to a patent application or patent. If you do not furnish the requested information, the U.S. Patent and Trademark Office may not be able to process and/or examine your submission, which may result in termination of proceedings or abandonment of the application or expiration of the patent.

The information provided by you in this form will be subject to the following routine uses:

1. The information on this form will be treated confidentially to the extent allowed under the Freedom of Information Act (5 U.S.C. 552) and the Privacy Act (5 U.S.C. 552a). Records from this system of records may be disclosed to the Department of Justice to determine whether the Freedom of Information Act requires disclosure of these records.

2. A record from this system of records may be disclosed, as a routine use, in the course of presenting evidence to a court, magistrate, or administrative tribunal, including disclosures to opposing counsel in the course of settlement negotiations.

3. A record in this system of records may be disclosed, as a routine use, to a Member of Congress submitting a request involving an individual, to whom the record pertains, when the individual has requested assistance from the Member with respect to the subject matter of the record.

4. A record in this system of records may be disclosed, as a routine use, to a contractor of the Agency having need for the information in order to perform a contract. Recipients of information shall be required to comply with the requirements of the Privacy Act of 1974, as amended, pursuant to 5 U.S.C. 552a(m).

5. A record related to an International Application filed under the Patent Cooperation Treaty in this system of records may be disclosed, as a routine use, to the International Bureau of the World Intellectual Property Organization, pursuant to the Patent Cooperation Treaty.

6. A record in this system of records may be disclosed, as a routine use, to another federal agency for purposes of National Security review (35 U.S.C. 181) and for review pursuant to the Atomic Energy Act (42 U.S.C. 218(c)).

7. A record from this system of records may be disclosed, as a routine use, to the Administrator, General Services, or his/her designee, during an inspection of records conducted by GSA as part of that agency's responsibility to recommend improvements in records management practices and programs, under authority of 44 U.S.C. 2904 and 2906. Such disclosure shall be made in accordance with the GSA regulations governing inspection of records for this purpose, and any other relevant (i.e., GSA or Commerce) directive. Such disclosure shall not be used to make determinations about individuals.

8. A record from this system of records may be disclosed, as a routine use, to the public after either publication of the application pursuant to 35 U.S.C. 122(b) or issuance of a patent pursuant to 35 U.S.C. 151. Further, a record may be disclosed, subject to the limitations of 37 CFR 1.14, as a routine use, to the public if the record was filed in an application which became abandoned or in which the proceedings were terminated and which application is referenced by either a published application, an application open to public inspections or an issued patent.

9. A record from this system of records may be disclosed, as a routine use, to a Federal, State, or local law enforcement agency, if the USPTO becomes aware of a violation or potential violation of law or regulation.

PATENT COOPERATION TREATY

From the INTERNATIONAL SEARCHING AUTHORITY

CONFIRMATION

To:

Blayne D. Green
Omikron IP Law Group
16325 Boones Ferry Rd Suite 204
Lake Oswego, Oregon, 97035
United States of America

PCT

NOTIFICATION OF TRANSMITTAL OF THE INTERNATIONAL SEARCH REPORT AND THE WRITTEN OPINION OF THE INTERNATIONAL SEARCHING AUTHORITY, OR THE DECLARATION

(PCT Rule 44.1)

	Date of mailing *(day/month/year)* 4 NOVEMBER 2011
Applicant's or agent's file reference 006.PCT090	**FOR FURTHER ACTION** See paragraphs 1 and 4 below
International application No. **PCT/US2011/049003**	International filing date *(day/month/year)* 24 August 2011
Applicant EMPIRE TECHNOLOGY DEVELOPMENT LLC et al.	

1. [X] The applicant is hereby notified that the international search report and the written opinion of the International Searching Authority have been established and are transmitted herewith.
Filing of amendments and statement under Article 19:
The applicant is entitled, if he so wishes, to amend the claims of the international application (see Rule 46):
When? The time limit for filing such amendments is normally two months from the date of transmittal of the international search report.
Where? Directly to the International Bureau of WIPO, 34 chemin des Colombettes 1211 Geneva 20, Switzerland, Facsimile No.: +41 22 338 82 70
For more detailed instructions, see *PCT Applicant's Guide*, International Phase, paragraphs 9.004 – 9.011 .

2. [ ] The applicant is hereby notified that no international search report will be established and that the declaration under Article 17(2)(a) to that effect and the written opinion of the International Searching Authority are transmitted herewith.

3. [ ] **With regard to any protest** against payment of (an) additional fee(s) under Rule 40.2, the applicant is notified that:
   - [ ] the protest together with the decision thereon has been transmitted to the International Bureau together with the applicant's request to forward the texts of both the protest and the decision thereon to the designated Offices.
   - [ ] no decision has been made yet on the protest; the applicant will be notified as soon as a decision is made.

4. **Reminders**

The applicant may submit comments on an informal basis on the written opinion of the International Searching Authority to the International Bureau. The International Bureau will send a copy of such comments to all designated Offices unless an international preliminary examination report has been or is to be established. Following the expiration of 30 months from the priority date, these comments will also be made available to the public.

Shortly after the expiration of **18 months** from the priority date, the international application will be published by the International Bureau. If the applicant wishes to avoid or postpone publication, a notice of withdrawal of the international application, or of the priority claim, must reach the International Bureau before the completion of the technical preparations for international publication (Rules 90*bis*.1 and 90*bis*.3).

Within **19 months** from the priority date, but only in respect of some designated Offices, a demand for international preliminary examination must be filed if the applicant wishes to postpone the entry into the national phase **until 30 months** from the priority date (in some Offices even later); otherwise, the applicant must, **within 20 months** from the priority date, perform the prescribed acts for entry into the national phase before those designated Offices.

In respect of other designated Offices, the time limit of **30 months** (or later) will apply even if no demand is filed within 19 months.

For details about the applicable time limits, Office by Office, see www.wipo.int/pct/en/texts/time_limits.html and the *PCT Applicant's Guide*, National Chapters.

Name and mailing address of the ISA/AU AUSTRALIAN PATENT OFFICE PO BOX 200, WODEN ACT 2606, AUSTRALIA E-mail address: pct@ipaustralia.gov.au Facsimile No. +61 2 6283 7999	Authorized officer **PRADNYA SATARKAR** AUSTRALIAN PATENT OFFICE (ISO 9001 Quality Certified Service) Telephone No. +61 2 6283 2751

RECEIVED NOV 17 2011

By _____

Form PCT/ISA/220 (July 2010)

(See notes on accompanying sheet)

PATENT COOPERATION TREATY

PCT

INTERNATIONAL SEARCH REPORT

(PCT Article 18 and Rules 43 and 44)

Applicant's or agent's file reference 006.PCT090	**FOR FURTHER ACTION**	see Form PCT/ISA/220 as well as, where applicable, item 5 below.
International application No. **PCT/US2011/049003**	International filing date *(day/month/year)* 24 August 2011	(Earliest) Priority Date *(day/month/year)* 24 August 2011
Applicant EMPIRE TECHNOLOGY DEVELOPMENT LLC et al.		

This international search report has been prepared by this International Searching Authority and is transmitted to the applicant according to Article 18. A copy is being transmitted to the International Bureau.

This international search report consists of a total of 4 sheets.

☐ It is also accompanied by a copy of each prior art document cited in this report.

1. **Basis of the report**

a. With regard to the **language,** the international search was carried out on the basis of:

☒ The international application in the language in which it was filed.

☐ A translation of the international application into , which is the language of a translation furnished for the purposes of international search (Rules 12.3(a) and 23.1(b)).

b. ☐ This international search report has been established taking into account the **rectification of an obvious mistake** authorized by or notified to this Authority under Rule 91 (Rule 43.6*bis*(a)).

c. ☐ With regard to any **nucleotide and/or amino acid sequence** disclosed in the international application, see Box No. I.

2. ☐ **Certain claims were found unsearchable** (See Box No. II).

3. ☐ **Unity of invention is lacking** (See Box No. III).

4. With regard to the **title,**

☒ the text is approved as submitted by the applicant.

☐ the text has been established by this Authority to read as follows:

5. With regard to the **abstract,**

☐ the text is approved as submitted by the applicant.

☒ the text has been established, according to Rule 38.2, by this Authority as it appears in Box No. IV. The applicant may, within one month from the date of mailing of this international search report, submit comments to this Authority.

6. With regard to the **drawings,**

a. the figure of the **drawings** to be published with the abstract is Figure No. **1B**

☐ as suggested by the applicant.

☒ as selected by this Authority, because the applicant failed to suggest a figure.

☐ as selected by this Authority, because this figure better characterizes the invention.

b. ☐ none of the figures is to be published with the abstract.

RECEIVED
NOV 17 2011
By

IPR2024-00135
Petitioners' Ex. 1002
Ex.1002.00031

INTERNATIONAL SEARCH REPORT

International application No.
PCT/US2011/049003

Box No. IV Text of the Abstract (Continuation of item 5 of the first sheet)

The methods for providing network coverage for a group of devices may include cycling over time through a coverage sequence that includes providing a first coverage configuration and providing a second coverage configuration. Providing the first coverage configuration may include transmitting a first beam of a first network that may be configured to provide coverage for the group of devices. Providing the second coverage configuration may include transmitting a second beam of the first network that may be narrower than the first beam and configured to provide coverage to at least one continuous use device of the group of devices, and providing coverage by a second network to a plurality of interval use devices of the group of devices.

INTERNATIONAL SEARCH REPORT

International application No.
PCT/US2011/049003

A. CLASSIFICATION OF SUBJECT MATTER

Int. Cl.

H04W 28/16 (2009.01) ***H04W 16/24*** (2009.01)

According to International Patent Classification (IPC) or to both national classification and IPC

B. FIELDS SEARCHED

Minimum documentation searched (classification system followed by classification symbols)

Documentation searched other than minimum documentation to the extent that such documents are included in the fields searched

Electronic data base consulted during the international search (name of data base and, where practicable, search terms used)
EPOQUE, WPI, Google Patents: Keywords (Wireless, network, coverage, cycling, continuous use, narrow, wide, beam, power, saving, improve, battery life) and similar terms

C. DOCUMENTS CONSIDERED TO BE RELEVANT

Category*	Citation of document, with indication, where appropriate, of the relevant passages	Relevant to claim No.
A	US 2006/0223573 A1 (JALALI) 05 October 2006 (Paragraphs [0051-0052], figure 4)	
A	US 2002/0137538 A1 (CHEN et al.) 26 September 2002 (Abstract)	

☐ Further documents are listed in the continuation of Box C ☒ See patent family annex

* Special categories of cited documents:

"A" document defining the general state of the art which is not considered to be of particular relevance

"E" earlier application or patent but published on or after the international filing date

"L" document which may throw doubts on priority claim(s) or which is cited to establish the publication date of another citation or other special reason (as specified)

"O" document referring to an oral disclosure, use, exhibition or other means

"P" document published prior to the international filing date but later than the priority date claimed

"T" later document published after the international filing date or priority date and not in conflict with the application but cited to understand the principle or theory underlying the invention

"X" document of particular relevance; the claimed invention cannot be considered novel or cannot be considered to involve an inventive step when the document is taken alone

"Y" document of particular relevance; the claimed invention cannot be considered to involve an inventive step when the document is combined with one or more other such documents, such combination being obvious to a person skilled in the art

"&" document member of the same patent family

Date of the actual completion of the international search	Date of mailing of the international search report
31 October 2011	4 NOVEMBER 2011
Name and mailing address of the ISA/AU	Authorized officer
AUSTRALIAN PATENT OFFICE PO BOX 200, WODEN ACT 2606, AUSTRALIA E-mail address: pct@ipaustralia.gov.au Facsimile No. +61 2 6283 7999	**PRADNYA SATARKAR** AUSTRALIAN PATENT OFFICE (ISO 9001 Quality Certified Service) Telephone No : +61 2 6283 2751

Form PCT/ISA/210 (second sheet) (July 2009)

INTERNATIONAL SEARCH REPORT

Information on patent family members

International application No.
PCT/US2011/049003

This Annex lists the known "A" publication level patent family members relating to the patent documents cited in the above-mentioned international search report. The Australian Patent Office is in no way liable for these particulars which are merely given for the purpose of information.

Patent Document Cited in Search Report		Patent Family Member					
US	2006223573	CN	101341771	EP	1869943	JP	2008535404
		KR	20070116161	US	7379750	US	2008220808
		US	7684802	WO	2006105300		
US	2002137538	AU	2002309505	BR	0208311	CN	1593020
		EP	1382132	HK	1073021	JP	2005509309
		US	7340279	WO	02078372		

Due to data integration issues this family listing may not include 10 digit Australian applications filed since May 2001.

END OF ANNEX

PATENT COOPERATION TREATY

From the:
INTERNATIONAL SEARCHING AUTHORITY

To:

Blayne D. Green
Omikron IP Law Group
16325 Boones Ferry Rd Suite 204
Lake Oswego, Oregon, 97035
United States of America

PCT

WRITTEN OPINION OF THE
INTERNATIONAL SEARCHING AUTHORITY

(PCT Rule 43*bis*.1)

Date of mailing
(day/month/year) 4 NOVEMBER 2011

FOR FURTHER ACTION
See paragraph 2 below

Applicant's or agent's file reference
006.PCT090

International application No.	International filing date *(day/month/year)*	Priority date *(day/month/year)*
PCT/US2011/049003	24 August 2011	24 August 2011

International Patent Classification (IPC) or both national classification and IPC
Int. Cl.

H04W 28/16 (2009.01) ***H04W 16/24*** (2009.01)

Applicant
EMPIRE TECHNOLOGY DEVELOPMENT LLC et al.

1. This opinion contains indications relating to the following items:

- [X] Box No. I — Basis of the opinion
- [ ] Box No. II — Priority
- [ ] Box No. III — Non-establishment of opinion with regard to novelty, inventive step and industrial applicability
- [ ] Box No. IV — Lack of unity of invention
- [X] Box No. V — Reasoned statement under Rule 43*bis*.1(a)(i) with regard to novelty, inventive step and industrial applicability; citations and explanations supporting such statement
- [ ] Box No. VI — Certain documents cited
- [ ] Box No. VII — Certain defects in the international application
- [ ] Box No. VIII — Certain observations on the international application

2. **FURTHER ACTION**

If a demand for international preliminary examination is made, this opinion will be considered to be a written opinion of the International Preliminary Examining Authority ("IPEA") except that this does not apply where the applicant chooses an Authority other than this one to be the IPEA and the chosen IPEA has notified the International Bureau under Rule 66.1*bis*(b) that written opinions of this International Searching Authority will not be so considered.

If this opinion is, as provided above, considered to be a written opinion of the IPEA, the applicant is invited to submit to the IPEA a written reply together, where appropriate, with amendments, before the expiration of 3 months from the date of mailing of Form PCT/ISA/220 or before the expiration of 22 months from the priority date, whichever expires later.

For further options, see Form PCT/ISA/220.

Name and mailing address of the ISA	Date of completion of this opinion	Authorized Officer
AUSTRALIAN PATENT OFFICE PO BOX 200, WODEN ACT 2606, AUSTRALIA E-mail address: pct@ipaustralia.gov.au Facsimile No. +61 2 6283 7999	31 October 2011	**PRADNYA SATARKAR** AUSTRALIAN PATENT OFFICE (ISO 9001 Quality Certified Service) Telephone No. +61 2 6283 2751

RECEIVED
NOV 17 2011
By

Form PCT/ISA/237 (Cover sheet) (July 2011)

WRITTEN OPINION OF THE INTERNATIONAL SEARCHING AUTHORITY

International application No.

PCT/US2011/049003

Box No. I **Basis of this opinion**

1. With regard to the **language,** this opinion has been established on the basis of:

   [X] The international application in the language in which it was filed

   [ ] A translation of the international application into, , which is the language of a translation furnished for the purposes of international search (under Rules 12.3(a) and 23.1(b)).

2. [ ] This opinion has been established taking into account **the rectification of an obvious mistake** authorized by or notified to this Authority under Rule 91 (Rule 43*bis*.1(a))

3. With regard to any **nucleotide and/or amino acid sequence** disclosed in the international application, this opinion has been established on the basis of a sequence listing filed or furnished:

   a. (means)

   [ ] on paper

   [ ] in electronic form

   b. (time)

   [ ] in the international application as filed

   [ ] together with the international application in electronic form

   [ ] subsequently to this Authority for the purposes of search

4. [ ] In addition, in the case that more than one version or copy of a sequence listing has been filed or furnished, the required statements that the information in the subsequent or additional copies is identical to that in the application as filed or does not go beyond the application as filed, as appropriate, were furnished.

5. Additional comments:

IPR2024-00135
Petitioners' Ex. 1002
Ex.1002.00036

WRITTEN OPINION OF THE INTERNATIONAL SEARCHING AUTHORITY

International application No.

PCT/US2011/049003

Box No. V **Reasoned statement under Rule 43*bis*.1(a)(i) with regard to novelty, inventive step or industrial applicability; citations and explanations supporting such statement**

1. Statement

Novelty (N)	Claims **1-27**	**YES**
	Claims **NONE**	**NO**
Inventive step (IS)	Claims **1-27**	**YES**
	Claims **NONE**	**NO**
Industrial applicability (IA)	Claims **1-27**	**YES**
	Claims **NONE**	**NO**

2. Citations and explanations:

The following documents identified in the International Search Report have been considered for the purposes of this report:

(D1): US 2006/0223573 A1 (JALALI) 05 October 2006
(D2): US 2002/0137538 A1 (CHEN et al.) 26 September 2002

NOVELTY (N)

D1, the closest prior art document discloses network coverage for a group of devices in an area (Figure 4) comprising providing a first coverage configuration and providing a second coverage configuration (Paragraph [0051]), wherein: providing the first coverage configuration includes transmitting a first beam of a first network that is configured to provide coverage for the group of devices; and providing the second coverage configuration includes transmitting a second beam of the first network that is narrower than the first beam (Paragraph [0052]). However, D1 fails to disclose that the network coverage cycles over time through a coverage sequence and also that the second coverage provides coverage to at least one continuous use device of the group of devices, and providing coverage by a second network to a plurality of interval use devices of the group of devices.
Therefore the subject matter of all the claims **1-27** is new and meets the requirements of Article 33(2) of the PCT with regard to novelty.

INVENTIVE STEP (IS)

The invention defined in claims 1-27 is not obvious in the light of any of the cited documents nor is it disclosed in any obvious combination of them especially the features of 'the network coverage cycling over time through a coverage sequence and also that the second coverage providing coverage to at least one continuous use device of the group of devices, and providing coverage by a second network to a plurality of interval use devices of the group of devices' are not disclosed.
It is also considered that these features would not be obvious to a person skilled in the art in the light of common general knowledge either by itself or in combination with any of these documents.
Therefore the subject matter of claims **1-27** is not obvious and meets the requirements of Article 33(3) of the PCT with regard to inventive step.

INDUSTRIAL APPLICABILITY (IA)

The invention defined in claims **1-27** is considered to meet the requirements of Industrial Applicability under Article 33(4) of the PCT because it can be made by, or used in, industry.

IPR2024-00135
Petitioners' Ex. 1002
Ex.1002.00037

Doc Code: Oath
Document Description: Oath or declaration filed

PTO/SB/01 (04-09)
Approved for use through 09/30/2010. OMB 0651-0032
U.S. Patent and Trademark Office; U.S. DEPARTMENT OF COMMERCE
Under the Paperwork Reduction Act of 1995, no persons are required to respond to a collection of information unless it contains a valid OMB control number.

DECLARATION FOR UTILITY OR DESIGN PATENT APPLICATION (37 CFR 1.63)

☑ Declaration Submitted With Initial Filing OR ☐ Declaration Submitted After Initial Filing (surcharge (37 CFR 1.16(f)) required)

Attorney Docket Number	006.P090
First Named Inventor	Ezekiel Kruglick
COMPLETE IF KNOWN	
Application Number	
Filing Date	
Art Unit	
Examiner Name	

I hereby declare that: (1) Each inventor's residence, mailing address, and citizenship are as stated below next to their name; and (2) I believe the inventor(s) named below to be the original and first inventor(s) of the subject matter which is claimed and for which a patent is sought on the invention titled:

NETWORK COVERAGE BY CYCLING THROUGH BEAM SHAPE COVERAGE CONFIGURATIONS

(Title of the Invention)

the application of which

☐ is attached hereto

OR

☑ was filed on (MM/DD/YYYY) 08/24/2011 as United States Application Number or PCT International Application Number PCT/US2011/049003 and was amended on (MM/DD/YYYY) _____ (if applicable).

I hereby state that I have reviewed and understand the contents of the above identified application, including the claims, as amended by any amendment specifically referred to above.

I acknowledge the duty to disclose information which is material to patentability as defined in 37 CFR 1.56, including for continuation-in-part applications, material information which became available between the filing date of the prior application and the national or PCT international filing date of the continuation-in-part application.

Authorization To Permit Access To Application by Participating Offices

☐ If checked, the undersigned hereby grants the USPTO authority to provide the European Patent Office (EPO), the Japan Patent Office (JPO), the Korean Intellectual Property Office (KIPO), the World Intellectual Property Office (WIPO), and any other intellectual property offices in which a foreign application claiming priority to the above-identified patent application is filed access to the above-identified patent application. See 37 CFR 1.14(c) and (h). This box should not be checked if the applicant does not wish the EPO, JPO, KIPO, WIPO, or other intellectual property office in which a foreign application claiming priority to the above-identified patent application is filed to have access to the above-identified patent application.

In accordance with 37 CFR 1.14(h)(3), access will be provided to a copy of the above-identified patent application with respect to: 1) the above-identified patent application-as-filed; 2) any foreign application to which the above-identified patent application claims priority under 35 U.S.C. 119(a)-(d) if a copy of the foreign application that satisfies the certified copy requirement of 37 CFR 1.55 has been filed in the above-identified patent application; and 3) any U.S. application-as-filed from which benefit is sought in the above-identified patent application.

In accordance with 37 CFR 1.14(c), access may be provided to information concerning the date of filing the Authorization to Permit Access to Application by Participating Offices.

This collection of information is required by 35 U.S.C. 115 and 37 CFR 1.63. The information is required to obtain or retain a benefit by the public which is to file (and by the USPTO to process) an application. Confidentiality is governed by 35 U.S.C. 122 and 37 CFR 1.11 and 1.14. This collection is estimated to take 21 minutes to complete, including gathering, preparing, and submitting the completed application form to the USPTO. Time will vary depending upon the individual case. Any comments on the amount of time you require to complete this form and/or suggestions for reducing this burden, should be sent to the Chief Information Officer, U.S. Patent and Trademark Office, U.S. Department of Commerce, P.O. Box 1450, Alexandria, VA 22313-1450. DO NOT SEND FEES OR COMPLETED FORMS TO THIS ADDRESS. **SEND TO: Commissioner for Patents, P.O. Box 1450, Alexandria, VA 22313-1450.**

If you need assistance in completing the form, call 1-800-PTO-9199 and select option 2.

Under the Paperwork Reduction Act of 1995, no persons are required to respond to a collection of information unless it contains a valid OMB control number.

DECLARATION — Utility or Design Patent Application

Claim of Foreign Priority Benefits

I hereby claim foreign priority benefits under 35 U.S.C. 119(a)-(d) or (f), or 365(b) of any foreign application(s) for patent, inventor's or plant breeder's rights certificate(s), or 365(a) of any PCT international application which designated at least one country other than the United States of America, listed below and have also identified below, by checking the box, any foreign application for patent, inventor's or plant breeder's rights certificate(s), or any PCT international application having a filing date before that of the application on which priority is claimed.

Prior Foreign Application Number(s)	Country	Foreign Filing Date (MM/DD/YYYY)	Priority Not Claimed	Certified Copy Attached? YES	NO
PCT/US2011/049003	PCT	08/24/2011	☐	☐	☑
			☐	☐	☐
			☐	☐	☐
			☐	☐	☐

☐ Additional foreign application number(s) are listed on a supplemental priority data sheet PTO/SB/02B attached hereto.

PTO/SB/01 (04-09)
Approved for use through 09/30/2010. OMB 0651-0032
U.S. Patent and Trademark Office; U.S. DEPARTMENT OF COMMERCE
Under the Paperwork Reduction Act of 1995, no persons are required to respond to a collection of information unless it contains a valid OMB control number.

DECLARATION — Utility or Design Patent Application

Direct all correspondence to:	☑ The address associated with Customer Number:	65638	OR	☐ Correspondence address below

Name		
Address		
City	State	Zip
Country	Telephone	Email

WARNING:

Petitioner/applicant is cautioned to avoid submitting personal information in documents filed in a patent application that may contribute to identity theft. Personal information such as social security numbers, bank account numbers, or credit card numbers (other than a check or credit card authorization form PTO-2038 submitted for payment purposes) is never required by the USPTO to support a petition or an application. If this type of personal information is included in documents submitted to the USPTO, petitioners/applicants should consider redacting such personal information from the documents before submitting them to the USPTO. Petitioner/applicant is advised that the record of a patent application is available to the public after publication of the application (unless a non-publication request in compliance with 37 CFR 1.213(a) is made in the application) or issuance of a patent. Furthermore, the record from an abandoned application may also be available to the public if the application is referenced in a published application or an issued patent (see 37 CFR 1.14). Checks and credit card authorization forms PTO-2038 submitted for payment purposes are not retained in the application file and therefore are not publicly available. Petitioner/applicant is advised that documents which form the record of a patent application (such as the PTO/SB/01) are placed into the Privacy Act system of records DEPARTMENT OF COMMERCE, COMMERCE-PAT-7, System name: *Patent Application Files*. Documents not retained in an application file (such as the PTO-2038) are placed into the Privacy Act system of COMMERCE/PAT-TM-10, System name: *Deposit Accounts and Electronic Funds Transfer Profiles*.

I hereby declare that all statements made herein of my own knowledge are true and that all statements made on information and belief are believed to be true; and further that these statements were made with the knowledge that willful false statements and the like so made are punishable by fine or imprisonment, or both, under 18 U.S.C. 1001 and that such willful false statements may jeopardize the validity of the application or any patent issued thereon.

NAME OF SOLE OR FIRST INVENTOR:		☐ A petition has been filed for this unsigned inventor	
Given Name (first and middle [if any])		Family Name or Surname	
Ezekiel		Kruglick	
Inventor's Signature		Date 11/21/2011	
Residence: City	State	Country	Citizenship
Poway	California	US	US
Mailing Address			
13842 Deergrass Ct.			
City	State	Zip	Country
Poway	CA	92064	US

☐ Additional inventors or a legal representative are being named on the _____ supplemental sheet(s) PTO/SB/02A or 02LR attached hereto

Privacy Act Statement

The Privacy Act of 1974 (P.L. 93-579) requires that you be given certain information in connection with your submission of the attached form related to a patent application or patent. Accordingly, pursuant to the requirements of the Act, please be advised that: (1) the general authority for the collection of this information is 35 U.S.C. 2(b)(2); (2) furnishing of the information solicited is voluntary; and (3) the principal purpose for which the information is used by the U.S. Patent and Trademark Office is to process and/or examine your submission related to a patent application or patent. If you do not furnish the requested information, the U.S. Patent and Trademark Office may not be able to process and/or examine your submission, which may result in termination of proceedings or abandonment of the application or expiration of the patent.

The information provided by you in this form will be subject to the following routine uses:

1. The information on this form will be treated confidentially to the extent allowed under the Freedom of Information Act (5 U.S.C. 552) and the Privacy Act (5 U.S.C 552a). Records from this system of records may be disclosed to the Department of Justice to determine whether disclosure of these records is required by the Freedom of Information Act.
2. A record from this system of records may be disclosed, as a routine use, in the course of presenting evidence to a court, magistrate, or administrative tribunal, including disclosures to opposing counsel in the course of settlement negotiations.
3. A record in this system of records may be disclosed, as a routine use, to a Member of Congress submitting a request involving an individual, to whom the record pertains, when the individual has requested assistance from the Member with respect to the subject matter of the record.
4. A record in this system of records may be disclosed, as a routine use, to a contractor of the Agency having need for the information in order to perform a contract. Recipients of information shall be required to comply with the requirements of the Privacy Act of 1974, as amended, pursuant to 5 U.S.C. 552a(m).
5. A record related to an International Application filed under the Patent Cooperation Treaty in this system of records may be disclosed, as a routine use, to the International Bureau of the World Intellectual Property Organization, pursuant to the Patent Cooperation Treaty.
6. A record in this system of records may be disclosed, as a routine use, to another federal agency for purposes of National Security review (35 U.S.C. 181) and for review pursuant to the Atomic Energy Act (42 U.S.C. 218(c)).
7. A record from this system of records may be disclosed, as a routine use, to the Administrator, General Services, or his/her designee, during an inspection of records conducted by GSA as part of that agency's responsibility to recommend improvements in records management practices and programs, under authority of 44 U.S.C. 2904 and 2906. Such disclosure shall be made in accordance with the GSA regulations governing inspection of records for this purpose, and any other relevant (i.e., GSA or Commerce) directive. Such disclosure shall not be used to make determinations about individuals.
8. A record from this system of records may be disclosed, as a routine use, to the public after either publication of the application pursuant to 35 U.S.C. 122(b) or issuance of a patent pursuant to 35 U.S.C. 151. Further, a record may be disclosed, subject to the limitations of 37 CFR 1.14, as a routine use, to the public if the record was filed in an application which became abandoned or in which the proceedings were terminated and which application is referenced by either a published application, an application open to public inspection or an issued patent.
9. A record from this system of records may be disclosed, as a routine use, to a Federal, State, or local law enforcement agency, if the USPTO becomes aware of a violation or potential violation of law or regulation.

PTO/SB/20PCT-AU (01-11)
Approved for use through 01/31/2012. OMB 0651-0058
U.S. Patent and Trademark Office; U. S. DEPARTMENT OF COMMERCE
Under the Paperwork Reduction Act of 1995, no persons are required to respond to a collection of information unless it displays a valid OMB control number.

REQUEST FOR PARTICIPATION IN THE PATENT COOPERATION TREATY - PATENT PROSECUTION HIGHWAY (PCT-PPH) PILOT PROGRAM BETWEEN THE IP AUSTRALIA (IPAU) AND THE USPTO

Application No:		Filing date:	11/21/2011
First Named Inventor:	Ezekiel Kruglick		
Title of the Invention:	NETWORK COVERAGE BY CYCLING THROUGH BEAM SHAPE COVERAGE CONFIGURATIONS		

THIS REQUEST FOR PARTICIPATION IN THE PCT-PPH PILOT PROGRAM ALONG WITH THE REQUIRED DOCUMENTS MUST BE SUBMITTED VIA EFS-WEB. INFORMATION REGARDING EFS-WEB IS AVAILABLE AT HTTP://WWW.USPTO.GOV/EBC/EFS_HELP.HTML

APPLICANT HEREBY REQUESTS PARTICIPATION IN THE PCT-PPH PROGRAM AND PETITIONS TO MAKE THE ABOVE-IDENTIFIED APPLICATION SPECIAL UNDER THE PCT-PPH PROGRAM.

The above-identified application is (1) a national stage entry of the corresponding PCT application, or (2) a national stage entry of another PCT application which claims priority to the corresponding PCT application, or (3) a national application that claims domestic/ foreign priority to the corresponding PCT application, or (4) a national application which forms the basis for the priority claim in the corresponding PCT application, or (5) a continuing application of a U.S. application that satisfies one of (1) to (4) above, or (6) a U.S. application that claims domestic benefit to a U.S. provisional application which forms the basis for the priority claim in the corresponding PCT application.

The corresponding PCT application number(s) is/are: PCT/US2011/049003

The international filing date of the corresponding PCT application(s) is/are: 8/24/2011

I. List of Required Documents:

a. **A copy of the latest international work product (WO/ISA, WO/IPEA, or IPER) in the above–identified corresponding PCT application(s)**

- [x] Is attached.
- [ ] Is not attached because the document is already in the U.S. application.

b. **A copy of all claims which were indicated as having novelty, inventive step and industrial applicability in the above-identified corresponding PCT application(s).**

- [ ] Is attached.
- [x] Is not attached because the document is already in the U.S. application.

c. **English translations of the documents in a. and b. above are attached (if the documents are not in the English language). A statement that the English translation is accurate is attached for the document in b. above.**

This collection of information is required by 35 U.S.C. 119, 37 CFR 1.55, and 37 CFR 1.102(d). The information is required to obtain or retain a benefit by the public, which is to file (and by the USPTO to process) an application. Confidentiality is governed by 35 U.S.C. 122 and 37 CFR 1.11 and 1.14. This collection is estimated to take 2 hours to complete, including gathering, preparing, and submitting the completed application form to the USPTO. Time will vary depending upon the individual case. Any comments on the amount of time you require to complete this form and/or suggestions for reducing this burden should be sent to the Chief Information Officer, U.S. Patent and Trademark Office, U.S. Department of Commerce, P.O. Box 1450, Alexandria, VA 22313-1450. DO NOT SEND FEES OR COMPLETED FORMS TO THIS ADDRESS.

Approved for use through 01/31/2012. OMB 0651-0058
U.S.Patent and Trademark Office; U.S. DEPARTMENT OF COMMERCE
Under the Paperwork Reduction Act of 1995, no persons are required to respond to a collection of information unless it displays a valid OMB control number.

REQUEST FOR PARTICIPATION IN THE PCT-PPH PILOT PROGRAM BETWEEN THE IPAU AND THE USPTO

(continued)

Application No.:	
First Named Inventor:	Ezekiel Kruglick

d. **(1) An information disclosure statement listing the documents cited in the international work products (ISR, WO/ISA, WO/IPEA, IPER) of the corresponding PCT application.**

- [✔] Is attached
- [ ] Has already been filed in the above-identified U.S. application on _____

(2) Copies of all documents (except) for U.S. patents or U.S. patent application publications)

- [✔] Are attached.
- [ ] Have already been filed in the above-identified U.S. application on _____

II. Claims Correspondence Table:

Claims in US Application	Patentable Claims in the corresponding PCT Application	Explanation regarding the correspondence
1-27	1-27	

III. All the claims in the US application sufficiently correspond to the patentable claims in the corresponding PCT application.

Signature /Blayne D. Green/	Date 11/21/2011
Name (Print/Typed) Blayne D. Green	Registration Number 56,198

Privacy Act Statement

The **Privacy Act of 1974 (P.L. 93-579)** requires that you be given certain information in connection with your submission of the attached form related to a patent application or patent. Accordingly, pursuant to the requirements of the Act, please be advised that: (1) the general authority for the collection of this information is 35 U.S.C. 2(b)(2); (2) furnishing of the information solicited is voluntary; and (3) the principal purpose for which the information is used by the U.S. Patent and Trademark Office is to process and/or examine your submission related to a patent application or patent. If you do not furnish the requested information, the U.S. Patent and Trademark Office may not be able to process and/or examine your submission, which may result in termination of proceedings or abandonment of the application or expiration of the patent.

The information provided by you in this form will be subject to the following routine uses:

1. The information on this form will be treated confidentially to the extent allowed under the Freedom of Information Act (5 U.S.C. 552) and the Privacy Act (5 U.S.C 552a). Records from this system of records may be disclosed to the Department of Justice to determine whether disclosure of these records is required by the Freedom of Information Act.
2. A record from this system of records may be disclosed, as a routine use, in the course of presenting evidence to a court, magistrate, or administrative tribunal, including disclosures to opposing counsel in the course of settlement negotiations.
3. A record in this system of records may be disclosed, as a routine use, to a Member of Congress submitting a request involving an individual, to whom the record pertains, when the individual has requested assistance from the Member with respect to the subject matter of the record.
4. A record in this system of records may be disclosed, as a routine use, to a contractor of the Agency having need for the information in order to perform a contract. Recipients of information shall be required to comply with the requirements of the Privacy Act of 1974, as amended, pursuant to 5 U.S.C. 552a(m).
5. A record related to an International Application filed under the Patent Cooperation Treaty in this system of records may be disclosed, as a routine use, to the International Bureau of the World Intellectual Property Organization, pursuant to the Patent Cooperation Treaty.
6. A record in this system of records may be disclosed, as a routine use, to another federal agency for purposes of National Security review (35 U.S.C. 181) and for review pursuant to the Atomic Energy Act (42 U.S.C. 218(c)).
7. A record from this system of records may be disclosed, as a routine use, to the Administrator, General Services, or his/her designee, during an inspection of records conducted by GSA as part of that agency's responsibility to recommend improvements in records management practices and programs, under authority of 44 U.S.C. 2904 and 2906. Such disclosure shall be made in accordance with the GSA regulations governing inspection of records for this purpose, and any other relevant (*i.e.*, GSA or Commerce) directive. Such disclosure shall not be used to make determinations about individuals.
8. A record from this system of records may be disclosed, as a routine use, to the public after either publication of the application pursuant to 35 U.S.C. 122(b) or issuance of a patent pursuant to 35 U.S.C. 151. Further, a record may be disclosed, subject to the limitations of 37 CFR 1.14, as a routine use, to the public if the record was filed in an application which became abandoned or in which the proceedings were terminated and which application is referenced by either a published application, an application open to public inspection or an issued patent.
9. A record from this system of records may be disclosed, as a routine use, to a Federal, State, or local law enforcement agency, if the USPTO becomes aware of a violation or potential violation of law or regulation.

UNITED STATES PATENT AND TRADEMARK OFFICE

Commissioner for Patents
United States Patent and Trademark Office
P.O. Box 1450
Alexandria, VA 22313-1450
www.uspto.gov

OMIKRON IP LAW GROUP
16325 BOONES FERRY RD.
SUITE 204
LAKE OSWEGO OR 97035

MAILED
JAN 3 1 2012
OFFICE OF PETITIONS

In re Application of:
Ezekiel Kruglick
Application No. 13/321,792
Date Deposited : November 21, 2011
Attorney Docket No. 006.P090

: DECISION ON REQUEST TO
: PARTICIPATE IN THE PATENT
: PROSECUTION HIGHWAY
: PROGRAM AND PETITION
: TO MAKE SPECIAL UNDER
: 37 CFR 1.102(a)

This is a decision on the request to participate in the PCT Patent Prosecution Highway (PCT-PPH) pilot program and the petition under 37 CFR 1.102(a), filed November 21, 2011, to make the above-identified application special.

The request and petition are **DISMISSED**.

Discussion

A grantable request to participate in the PCT-PPH pilot program and petition to make special require:

(1) The U.S. application must have an eligible relationship to one or more PCT applications where the ISA or IPEA are the JPO, EPO, KIPO, IPAU, NPI, Australia, Austria, China, Finland, Russia, Spain, Sweden, or USPTO;

(2) At least one claim in the PCT application has novelty, inventive step, and industrial applicability and must be free of any observations in Box VIII in the latest work product in the international stage or applicant must identify and explain why the claim(s) is/are not subject to the observation in Box VIII;

(3) Applicant must submit a copy of the claim(s) from the PCT application(s) that have novelty, inventive step, and industrial applicability along with an English translation thereof and a statement that the English translation is accurate, if the claims are not in the English language;

(4) All the claims in the U.S. application must sufficiently correspond or be amended to sufficiently correspond to the claim(s) that have novelty, inventive step, and industrial applicability in the PCT application(s);

(5) Examination of the U.S. application has not begun;

(6) Applicant must submit a copy of the latest international work product from the PCT application indicating that the claim(s) have novelty, inventive step, and industrial applicability

along with an English translation thereof.

(7) Applicant must submit an IDS listing the documents cited by the PCT examiner in the international work product along with copies of documents except U.S. patents or U.S. patent application publications.

(8) Applicant is required to submit a claims correspondence table in English which indicates how all the claims in the U.S. application correspond to the claims indicated as having novelty, inventive step and industrial applicability in the latest international work product.

Currently, requirements (1)-(2), and (5)-(6) are considered to have been met. However, the request to participate in the PPH pilot program and petition fails to meet requirements (3), (4) and (8).

Regarding the requirement of condition (3), petitioner has failed to submit a copy of the claim(s) from the PCT application. Petitioner is reminded that this submission requires an English translation thereof and a statement that the English translation is accurate, if the claims are not in the English language;

Regarding the requirement of condition (4), all the claims in the U.S. application must sufficiently correspond or be amended to sufficiently correspond to the claims(s) that have novelty, inventive step, and industrial applicability in the PCT application(s). However, petitioner has failed to submit any claims with the above-identified application and therefore no comparison of the scope of the claims can be attempted at this time.

Regarding the requirement of condition (8) petitioner has failed to complete the Claims Correspondence Table with respect to the explanation required regarding the correspondence.

Applicant is given **ONE** opportunity within a time period of **ONE MONTH or THIRTY DAYS**, whichever is longer, from the mailing date of this decision to correct the deficiencies. **NO EXTENSION OF TIME UNDER 37 CFR 1.136 IS PERMITTED.** If the deficiencies are not corrected with the time period given, the application will await action in its regular turn.

Response must be filed via the Electronic Filing System (EFS) using the document description: Petition to make special under PCT – Patent Pros Hwy. Any preliminary amendments and IDS submitted with the PPH documents must be separately indexed as a preliminary amendment and IDS, respectively.

Telephone inquiries concerning this decision should be directed to Joan Olszewski at 571-272-7751.

All other inquiries concerning the examination or status of the application is accessible in the PAIR system at http://www.uspto.gov/ebc/index.html.

/dab/
David Bucci
Petitions Examiner
Office of Petitions

PTO/SB/20PCT-AU (01-11)
Approved for use through 01/31/2012. OMB 0651-0058
U.S. Patent and Trademark Office; U. S. DEPARTMENT OF COMMERCE
Under the Paperwork Reduction Act of 1995, no persons are required to respond to a collection of information unless it displays a valid OMB control number.

REQUEST FOR PARTICIPATION IN THE PATENT COOPERATION TREATY - PATENT PROSECUTION HIGHWAY (PCT-PPH) PILOT PROGRAM BETWEEN THE IP AUSTRALIA (IPAU) AND THE USPTO

Application No:	13/321,792	Filing date:	11/21/2011
First Named Inventor:	Ezekiel Kruglick		
Title of the Invention:	NETWORK COVERAGE BY CYCLING THROUGH BEAM SHAPE COVERAGE CONFIGURATIONS		

THIS REQUEST FOR PARTICIPATION IN THE PCT-PPH PILOT PROGRAM ALONG WITH THE REQUIRED DOCUMENTS MUST BE SUBMITTED VIA EFS-WEB. INFORMATION REGARDING EFS-WEB IS AVAILABLE AT HTTP://WWW.USPTO.GOV/EBC/EFS_HELP.HTML

APPLICANT HEREBY REQUESTS PARTICIPATION IN THE PCT-PPH PROGRAM AND PETITIONS TO MAKE THE ABOVE-IDENTIFIED APPLICATION SPECIAL UNDER THE PCT-PPH PROGRAM.

The above-identified application is (1) a national stage entry of the corresponding PCT application, or (2) a national stage entry of another PCT application which claims priority to the corresponding PCT application, or (3) a national application that claims domestic/ foreign priority to the corresponding PCT application, or (4) a national application which forms the basis for the priority claim in the corresponding PCT application, or (5) a continuing application of a U.S. application that satisfies one of (1) to (4) above, or (6) a U.S. application that claims domestic benefit to a U.S. provisional application which forms the basis for the priority claim in the corresponding PCT application.

The corresponding PCT application number(s) is/are: PCT/US2011/049003

The international filing date of the corresponding PCT application(s) is/are: 8/24/2011

I. List of Required Documents:

a. **A copy of the latest international work product (WO/ISA, WO/IPEA, or IPER) in the above–identified corresponding PCT application(s)**

- [x] Is attached.
- [ ] Is not attached because the document is already in the U.S. application.

b. **A copy of all claims which were indicated as having novelty, inventive step and industrial applicability in the above-identified corresponding PCT application(s).**

- [x] Is attached.
- [ ] Is not attached because the document is already in the U.S. application.

c. **English translations of the documents in a. and b. above are attached (if the documents are not in the English language). A statement that the English translation is accurate is attached for the document in b. above.**

This collection of information is required by 35 U.S.C. 119, 37 CFR 1.55, and 37 CFR 1.102(d). The information is required to obtain or retain a benefit by the public, which is to file (and by the USPTO to process) an application. Confidentiality is governed by 35 U.S.C. 122 and 37 CFR 1.11 and 1.14. This collection is estimated to take 2 hours to complete, including gathering, preparing, and submitting the completed application form to the USPTO. Time will vary depending upon the individual case. Any comments on the amount of time you require to complete this form and/or suggestions for reducing this burden should be sent to the Chief Information Officer, U.S. Patent and Trademark Office, U.S. Department of Commerce, P.O. Box 1450, Alexandria, VA 22313-1450. DO NOT SEND FEES OR COMPLETED FORMS TO THIS ADDRESS.

Approved for use through 01/31/2012. OMB 0651-0058
U.S.Patent and Trademark Office; U.S. DEPARTMENT OF COMMERCE
Under the Paperwork Reduction Act of 1995, no persons are required to respond to a collection of information unless it displays a valid OMB control number.

REQUEST FOR PARTICIPATION IN THE PCT-PPH PILOT PROGRAM BETWEEN THE IPAU AND THE USPTO

(continued)

Application No.:	13/321,792
First Named Inventor:	Ezekiel Kruglick

d. **(1) An information disclosure statement listing the documents cited in the international work products (ISR, WO/ISA, WO/IPEA, IPER) of the corresponding PCT application.**

- [✔] Is attached
- [ ] Has already been filed in the above-identified U.S. application on _____

(2) Copies of all documents (except) for U.S. patents or U.S. patent application publications)

- [✔] Are attached.
- [ ] Have already been filed in the above-identified U.S. application on _____

II. Claims Correspondence Table:

Claims in US Application	Patentable Claims in the corresponding PCT Application	Explanation regarding the correspondence
1-27	1-27	Claims 1-27 in the US Application correspond to Claims 1-27 in the PCT Application

III. All the claims in the US application sufficiently correspond to the patentable claims in the corresponding PCT application.

Signature /Blayne D. Green/	Date 2/6/2012
Name (Print/Typed) Blayne D. Green	Registration Number 56,198

IPR2024-00135
Petitioners' Ex. 1002
Ex.1002.00048

Privacy Act Statement

The **Privacy Act of 1974 (P.L. 93-579)** requires that you be given certain information in connection with your submission of the attached form related to a patent application or patent. Accordingly, pursuant to the requirements of the Act, please be advised that: (1) the general authority for the collection of this information is 35 U.S.C. 2(b)(2); (2) furnishing of the information solicited is voluntary; and (3) the principal purpose for which the information is used by the U.S. Patent and Trademark Office is to process and/or examine your submission related to a patent application or patent. If you do not furnish the requested information, the U.S. Patent and Trademark Office may not be able to process and/or examine your submission, which may result in termination of proceedings or abandonment of the application or expiration of the patent.

The information provided by you in this form will be subject to the following routine uses:

1. The information on this form will be treated confidentially to the extent allowed under the Freedom of Information Act (5 U.S.C. 552) and the Privacy Act (5 U.S.C 552a). Records from this system of records may be disclosed to the Department of Justice to determine whether disclosure of these records is required by the Freedom of Information Act.
2. A record from this system of records may be disclosed, as a routine use, in the course of presenting evidence to a court, magistrate, or administrative tribunal, including disclosures to opposing counsel in the course of settlement negotiations.
3. A record in this system of records may be disclosed, as a routine use, to a Member of Congress submitting a request involving an individual, to whom the record pertains, when the individual has requested assistance from the Member with respect to the subject matter of the record.
4. A record in this system of records may be disclosed, as a routine use, to a contractor of the Agency having need for the information in order to perform a contract. Recipients of information shall be required to comply with the requirements of the Privacy Act of 1974, as amended, pursuant to 5 U.S.C. 552a(m).
5. A record related to an International Application filed under the Patent Cooperation Treaty in this system of records may be disclosed, as a routine use, to the International Bureau of the World Intellectual Property Organization, pursuant to the Patent Cooperation Treaty.
6. A record in this system of records may be disclosed, as a routine use, to another federal agency for purposes of National Security review (35 U.S.C. 181) and for review pursuant to the Atomic Energy Act (42 U.S.C. 218(c)).
7. A record from this system of records may be disclosed, as a routine use, to the Administrator, General Services, or his/her designee, during an inspection of records conducted by GSA as part of that agency's responsibility to recommend improvements in records management practices and programs, under authority of 44 U.S.C. 2904 and 2906. Such disclosure shall be made in accordance with the GSA regulations governing inspection of records for this purpose, and any other relevant (*i.e.*, GSA or Commerce) directive. Such disclosure shall not be used to make determinations about individuals.
8. A record from this system of records may be disclosed, as a routine use, to the public after either publication of the application pursuant to 35 U.S.C. 122(b) or issuance of a patent pursuant to 35 U.S.C. 151. Further, a record may be disclosed, subject to the limitations of 37 CFR 1.14, as a routine use, to the public if the record was filed in an application which became abandoned or in which the proceedings were terminated and which application is referenced by either a published application, an application open to public inspection or an issued patent.
9. A record from this system of records may be disclosed, as a routine use, to a Federal, State, or local law enforcement agency, if the USPTO becomes aware of a violation or potential violation of law or regulation.

WHAT IS CLAIMED:

1. A method for providing network coverage for a group of devices in an area comprising:

cycling over time through a coverage sequence that includes providing a first coverage configuration and providing a second coverage configuration, wherein:

providing the first coverage configuration includes transmitting a first beam of a first network that is configured to provide coverage for the group of devices; and

providing the second coverage configuration includes transmitting a second beam of the first network that is narrower than the first beam and configured to provide coverage to at least one continuous use device of the group of devices, and providing coverage by a second network to a plurality of interval use devices of the group of devices.

2. The method of claim 1, wherein the providing the second coverage configuration comprises determining a direction of transmission for the second beam based at least in part on a location of the at least one continuous use device.

3. The method of claim 1, wherein the second beam of the first network is further configured to provide coverage to a second continuous use device of the group of devices.

IPR2024-00135
Petitioners' Ex. 1002
Ex.1002.00050

4. The method of claim 1, wherein a subsequent iteration of providing the second coverage configuration includes transmitting the second beam of the first network configured to provide coverage to a second continuous use device, and wherein the at least one continuous use device has transitioned to being an interval use device.

5. The method of claim 1, wherein the first network and the second network are different network types.

6. The method of claim 5, wherein the first network and the second network comprise at least one of the following: the first network is a Third Generation Mobile (3G) network and the second network is an Enhanced Data Rates for Global Evolution (EDGE) network, the first network is a Fourth Generation Mobile (4G) network and the second network is an Enhanced Data Rates for Global Evolution (EDGE) network, the first network is a Long Term Evolution (LTE) network and the second network is an Enhanced Data Rates for Global Evolution (EDGE) network, the first network is an Evolution-Data Optimized (EV-DO) network and the second network is a Code Division Multiple Access (CDMA) network, the first network is a Fourth Generation Mobile (4G) network and the second network is a Third Generation Mobile (3G) network, the first network is a data network and the second network is a voice network, or the first network is a data network and the second network is a mixed voice and data network.

7. The method of claim 1, wherein the first network and the second network are the same network types, and wherein the at least one continuous use device is allowed access to the second beam based on an admission control parameter.

8. The method of claim 1, wherein the first coverage configuration is provided for a first time duration and the second coverage configuration is provided for a second time duration that is longer than the first time duration.

9. The method of claim 8, wherein in the first time duration is in the range of about 2 to 5 minutes and the second time duration is in the range of about 2 to 10 seconds.

10. The method of claim 1, wherein the at least one continuous use device is engaged in at least one of a voice call, a download, or a content streaming.

11. The method of claim 1, wherein the plurality of interval use devices defer and batch data updates during the second coverage configuration and receive the data updates during the first coverage configuration.

12. The method of claim 1, wherein the second beam is narrower than the first beam in at least one of a horizontal plane or a vertical plane.

13. The method of claim 1, wherein the first beam is about 12 degrees wide and the second beam is about 1 degree wide.

14. A method for providing network coverage for a group of devices in an area comprising:

cycling over time through a coverage sequence that includes providing a first coverage configuration, providing a second coverage configuration, and providing a third coverage configuration, wherein:

providing the first coverage configuration includes transmitting a first beam of a first network that is configured to provide coverage for a first set of the group of devices, and providing coverage by a second network to at least a second set of the group of devices;

providing the second coverage configuration includes transmitting a second beam of the first network that is configured to provide coverage for the second set of the group of devices, and providing coverage by the second network to at least the first set of the group of devices; and

providing the third coverage configuration includes transmitting a third beam of the first network that is narrower than the first beam and is configured to provide coverage to at least one continuous use device of the group of devices, and providing coverage by the second network to at least a plurality of interval use devices of the group.

15. The method of claim 14, wherein the first network and the second network comprise at least one of the following: the first network is a Third Generation Mobile (3G) network and the second network is an Enhanced Data Rates for Global Evolution (EDGE) network, the first network is a Fourth

Generation Mobile (4G) network and the second network is an Enhanced Data Rates for Global Evolution (EDGE) network, the first network is a Long Term Evolution (LTE) network and the second network is an Enhanced Data Rates for Global Evolution (EDGE) network, the first network is an Evolution-Data Optimized (EV-DO) network and the second network is a Code Division Multiple Access (CDMA) network, the first network is a Fourth Generation Mobile (4G) network and the second network is a Third Generation Mobile (3G) network, the first network is a data network and the second network is a voice network, or the first network is a data network and the second network is a mixed voice and data network.

16. The method of claim 14, wherein the third beam of the first network is further configured to provide coverage to a second continuous use device of the group of devices.

17. A machine readable non-transitory medium having stored therein instructions that, when executed, cause a device to provide a network coverage by:

cycling over time through a coverage sequence that includes providing a first coverage configuration and providing a second coverage configuration, wherein:

providing the first coverage configuration includes transmitting a first beam of a first network that is configured to provide coverage for the group of devices; and

providing the second coverage configuration includes transmitting a second beam of the first network that is narrower than the first beam and configured to provide coverage to at least one continuous use device of the group of devices, and providing coverage by a second network to a plurality of interval use devices of the group of devices.

18. The machine readable non-transitory medium of claim 17, wherein the first network and the second network are the same network types, and wherein the at least one active device is allowed access to the second beam based on an admission control parameter.

19. The machine readable non-transitory medium of claim 17, wherein the first coverage configuration is provided for a first time duration and the second beam shape is provided for a second time duration that is shorter than the first time duration.

20. A device comprising:

a machine readable medium having stored therein instructions that, when executed, cause the device to provide network coverage by:

cycling over time through a coverage sequence that includes providing a first coverage configuration and providing a second coverage configuration, wherein:

providing the first coverage configuration includes transmitting a first beam of a first network that is configured to provide coverage for the group of devices; and

providing the second coverage configuration includes transmitting a second beam of the first network that is narrower than the first beam and configured to provide coverage to at least one continuous use device of the group of devices, and providing coverage by a second network to a plurality of interval use devices of the group of devices;

a processor coupled to the machine readable medium to execute the instructions; and

an adaptive antenna configured to transmit the first beam and the second beam.

21. The device of claim 20, wherein the first network and the second network are the same network types, the at least one active device is allowed access to the second beam based on an admission control parameter, and the adaptive antenna is further configured to transmit a third beam of the second network.

22. The device of claim 20, further comprising:

a second antenna configured to provide a third beam of the second network.

23. A method for a device to receive data updates comprising:

IPR2024-00135
Petitioners' Ex. 1002
Ex.1002.00056

cycling over time through an update sequence that includes:

deferring, during coverage by a first network, data updates for the device;

transmitting a data update request in response to coverage by a second network, wherein the second network is a more capable network than the first network; and

receiving, during the second coverage configuration, a data update.

24. The method of claim 23, wherein the device comprises at least one of a mobile phone, a smartphone, a laptop computer, a netbook device, a tablet device or a personal digital assistant.

25. The method of claim 23, wherein the update sequence further comprises:

batching the deferred data updates for the device.

26. The method of claim 23, wherein the data update includes at least one of an email update, an Really Simple Syndication (RSS) feed update, a social networking update, a software update, a map update, or a gaming update.

27. The method of claim 23, wherein the first network and the second network comprise at least one of the following: the first network is a Third Generation Mobile (3G) network and the second network is an Enhanced Data Rates for Global Evolution (EDGE) network, the first network is a Fourth

Generation Mobile (4G) network and the second network is an Enhanced Data Rates for Global Evolution (EDGE) network, the first network is a Long Term Evolution (LTE) network and the second network is an Enhanced Data Rates for Global Evolution (EDGE) network, the first network is an Evolution-Data Optimized (EV-DO) network and the second network is a Code Division Multiple Access (CDMA) network, the first network is a Fourth Generation Mobile (4G) network and the second network is a Third Generation Mobile (3G) network, the first network is a data network and the second network is a voice network, or the first network is a data network and the second network is a mixed voice and data network.

IPR2024-00135
Petitioners' Ex. 1002
Ex.1002.00058

PATENT COOPERATION TREATY

From the INTERNATIONAL SEARCHING AUTHORITY

CONFIRMATION

To:

Blayne D. Green
Omikron IP Law Group
16325 Boones Ferry Rd Suite 204
Lake Oswego, Oregon, 97035
United States of America

PCT

NOTIFICATION OF TRANSMITTAL OF THE INTERNATIONAL SEARCH REPORT AND THE WRITTEN OPINION OF THE INTERNATIONAL SEARCHING AUTHORITY, OR THE DECLARATION

(PCT Rule 44.1)

	Date of mailing *(day/month/year)* 4 NOVEMBER 2011
Applicant's or agent's file reference 006.PCT090	**FOR FURTHER ACTION** See paragraphs 1 and 4 below
International application No. **PCT/US2011/049003**	International filing date *(day/month/year)* 24 August 2011
Applicant EMPIRE TECHNOLOGY DEVELOPMENT LLC et al.	

1. [X] The applicant is hereby notified that the international search report and the written opinion of the International Searching Authority have been established and are transmitted herewith.
Filing of amendments and statement under Article 19:
The applicant is entitled, if he so wishes, to amend the claims of the international application (see Rule 46):
When? The time limit for filing such amendments is normally two months from the date of transmittal of the international search report.
Where? Directly to the International Bureau of WIPO, 34 chemin des Colombettes 1211 Geneva 20, Switzerland, Facsimile No.: +41 22 338 82 70
For more detailed instructions, see *PCT Applicant's Guide*, International Phase, paragraphs 9.004 – 9.011 .

2. [ ] The applicant is hereby notified that no international search report will be established and that the declaration under Article 17(2)(a) to that effect and the written opinion of the International Searching Authority are transmitted herewith.

3. [ ] **With regard to any protest** against payment of (an) additional fee(s) under Rule 40.2, the applicant is notified that:
   - [ ] the protest together with the decision thereon has been transmitted to the International Bureau together with the applicant's request to forward the texts of both the protest and the decision thereon to the designated Offices.
   - [ ] no decision has been made yet on the protest; the applicant will be notified as soon as a decision is made.

4. **Reminders**

The applicant may submit comments on an informal basis on the written opinion of the International Searching Authority to the International Bureau. The International Bureau will send a copy of such comments to all designated Offices unless an international preliminary examination report has been or is to be established. Following the expiration of 30 months from the priority date, these comments will also be made available to the public.

Shortly after the expiration of **18 months** from the priority date, the international application will be published by the International Bureau. If the applicant wishes to avoid or postpone publication, a notice of withdrawal of the international application, or of the priority claim, must reach the International Bureau before the completion of the technical preparations for international publication (Rules 90*bis*.1 and 90*bis*.3).

Within **19 months** from the priority date, but only in respect of some designated Offices, a demand for international preliminary examination must be filed if the applicant wishes to postpone the entry into the national phase **until 30 months** from the priority date (in some Offices even later); otherwise, the applicant must, **within 20 months** from the priority date, perform the prescribed acts for entry into the national phase before those designated Offices.

In respect of other designated Offices, the time limit of **30 months** (or later) will apply even if no demand is filed within 19 months.

For details about the applicable time limits, Office by Office, see www.wipo.int/pct/en/texts/time_limits.html and the *PCT Applicant's Guide*, National Chapters.

Name and mailing address of the ISA/AU AUSTRALIAN PATENT OFFICE PO BOX 200, WODEN ACT 2606, AUSTRALIA E-mail address: pct@ipaustralia.gov.au Facsimile No. +61 2 6283 7999	Authorized officer **PRADNYA SATARKAR** AUSTRALIAN PATENT OFFICE (ISO 9001 Quality Certified Service) Telephone No. +61 2 6283 2751

RECEIVED
NOV 17 2011
By

Form PCT/ISA/220 (July 2010)

(See notes on accompanying sheet)

PATENT COOPERATION TREATY

PCT

INTERNATIONAL SEARCH REPORT

(PCT Article 18 and Rules 43 and 44)

Applicant's or agent's file reference 006.PCT090	**FOR FURTHER ACTION**	see Form PCT/ISA/220 as well as, where applicable, item 5 below.
International application No. **PCT/US2011/049003**	International filing date *(day/month/year)* 24 August 2011	(Earliest) Priority Date *(day/month/year)* 24 August 2011
Applicant EMPIRE TECHNOLOGY DEVELOPMENT LLC et al.		

This international search report has been prepared by this International Searching Authority and is transmitted to the applicant according to Article 18. A copy is being transmitted to the International Bureau.

This international search report consists of a total of 4 sheets.

☐ It is also accompanied by a copy of each prior art document cited in this report.

1. **Basis of the report**

a. With regard to the **language,** the international search was carried out on the basis of:

☒ The international application in the language in which it was filed.

☐ A translation of the international application into , which is the language of a translation furnished for the purposes of international search (Rules 12.3(a) and 23.1(b)).

b. ☐ This international search report has been established taking into account the **rectification of an obvious mistake** authorized by or notified to this Authority under Rule 91 (Rule 43.6*bis*(a)).

c. ☐ With regard to any **nucleotide and/or amino acid sequence** disclosed in the international application, see Box No. I.

2. ☐ **Certain claims were found unsearchable** (See Box No. II).

3. ☐ **Unity of invention is lacking** (See Box No. III).

4. With regard to the **title,**

☒ the text is approved as submitted by the applicant.

☐ the text has been established by this Authority to read as follows:

5. With regard to the **abstract,**

☐ the text is approved as submitted by the applicant.

☒ the text has been established, according to Rule 38.2, by this Authority as it appears in Box No. IV. The applicant may, within one month from the date of mailing of this international search report, submit comments to this Authority.

6. With regard to the **drawings,**

a. the figure of the **drawings** to be published with the abstract is Figure No. **1B**

☐ as suggested by the applicant.

☒ as selected by this Authority, because the applicant failed to suggest a figure.

☐ as selected by this Authority, because this figure better characterizes the invention.

b. ☐ none of the figures is to be published with the abstract.

RECEIVED
NOV 17 2011
By

IPR2024-00135
Petitioners' Ex. 1002
Ex.1002.00060

Box No. IV Text of the Abstract (Continuation of item 5 of the first sheet)

The methods for providing network coverage for a group of devices may include cycling over time through a coverage sequence that includes providing a first coverage configuration and providing a second coverage configuration. Providing the first coverage configuration may include transmitting a first beam of a first network that may be configured to provide coverage for the group of devices. Providing the second coverage configuration may include transmitting a second beam of the first network that may be narrower than the first beam and configured to provide coverage to at least one continuous use device of the group of devices, and providing coverage by a second network to a plurality of interval use devices of the group of devices.

INTERNATIONAL SEARCH REPORT

International application No.
PCT/US2011/049003

A. CLASSIFICATION OF SUBJECT MATTER

Int. Cl.

H04W 28/16 (2009.01) ***H04W 16/24*** (2009.01)

According to International Patent Classification (IPC) or to both national classification and IPC

B. FIELDS SEARCHED

Minimum documentation searched (classification system followed by classification symbols)

Documentation searched other than minimum documentation to the extent that such documents are included in the fields searched

Electronic data base consulted during the international search (name of data base and, where practicable, search terms used)
EPOQUE, WPI, Google Patents: Keywords (Wireless, network, coverage, cycling, continuous use, narrow, wide, beam, power, saving, improve, battery life) and similar terms

C. DOCUMENTS CONSIDERED TO BE RELEVANT

Category*	Citation of document, with indication, where appropriate, of the relevant passages	Relevant to claim No.
A	US 2006/0223573 A1 (JALALI) 05 October 2006 (Paragraphs [0051-0052], figure 4)	
A	US 2002/0137538 A1 (CHEN et al.) 26 September 2002 (Abstract)	

☐ Further documents are listed in the continuation of Box C ☒ See patent family annex

* Special categories of cited documents:

"A" document defining the general state of the art which is not considered to be of particular relevance

"E" earlier application or patent but published on or after the international filing date

"L" document which may throw doubts on priority claim(s) or which is cited to establish the publication date of another citation or other special reason (as specified)

"O" document referring to an oral disclosure, use, exhibition or other means

"P" document published prior to the international filing date but later than the priority date claimed

"T" later document published after the international filing date or priority date and not in conflict with the application but cited to understand the principle or theory underlying the invention

"X" document of particular relevance; the claimed invention cannot be considered novel or cannot be considered to involve an inventive step when the document is taken alone

"Y" document of particular relevance; the claimed invention cannot be considered to involve an inventive step when the document is combined with one or more other such documents, such combination being obvious to a person skilled in the art

"&" document member of the same patent family

Date of the actual completion of the international search	Date of mailing of the international search report
31 October 2011	4 NOVEMBER 2011
Name and mailing address of the ISA/AU	Authorized officer
AUSTRALIAN PATENT OFFICE PO BOX 200, WODEN ACT 2606, AUSTRALIA E-mail address: pct@ipaustralia.gov.au Facsimile No. +61 2 6283 7999	**PRADNYA SATARKAR** AUSTRALIAN PATENT OFFICE (ISO 9001 Quality Certified Service) Telephone No : +61 2 6283 2751

Form PCT/ISA/210 (second sheet) (July 2009)

INTERNATIONAL SEARCH REPORT

Information on patent family members

International application No.
PCT/US2011/049003

This Annex lists the known "A" publication level patent family members relating to the patent documents cited in the above-mentioned international search report. The Australian Patent Office is in no way liable for these particulars which are merely given for the purpose of information.

Patent Document Cited in Search Report		Patent Family Member					
US	2006223573	CN	101341771	EP	1869943	JP	2008535404
		KR	20070116161	US	7379750	US	2008220808
		US	7684802	WO	2006105300		
US	2002137538	AU	2002309505	BR	0208311	CN	1593020
		EP	1382132	HK	1073021	JP	2005509309
		US	7340279	WO	02078372		

Due to data integration issues this family listing may not include 10 digit Australian applications filed since May 2001.

END OF ANNEX

PATENT COOPERATION TREATY

From the:
INTERNATIONAL SEARCHING AUTHORITY

To:

Blayne D. Green
Omikron IP Law Group
16325 Boones Ferry Rd Suite 204
Lake Oswego, Oregon, 97035
United States of America

PCT

WRITTEN OPINION OF THE
INTERNATIONAL SEARCHING AUTHORITY

(PCT Rule 43*bis*.1)

Date of mailing
(day/month/year) 4 NOVEMBER 2011

FOR FURTHER ACTION
See paragraph 2 below

Applicant's or agent's file reference
006.PCT090

International application No.	International filing date *(day/month/year)*	Priority date *(day/month/year)*
PCT/US2011/049003	24 August 2011	24 August 2011

International Patent Classification (IPC) or both national classification and IPC
Int. Cl.

H04W 28/16 (2009.01) ***H04W 16/24*** (2009.01)

Applicant
EMPIRE TECHNOLOGY DEVELOPMENT LLC et al.

1. This opinion contains indications relating to the following items:

- [X] Box No. I — Basis of the opinion
- [ ] Box No. II — Priority
- [ ] Box No. III — Non-establishment of opinion with regard to novelty, inventive step and industrial applicability
- [ ] Box No. IV — Lack of unity of invention
- [X] Box No. V — Reasoned statement under Rule 43*bis*.1(a)(i) with regard to novelty, inventive step and industrial applicability; citations and explanations supporting such statement
- [ ] Box No. VI — Certain documents cited
- [ ] Box No. VII — Certain defects in the international application
- [ ] Box No. VIII — Certain observations on the international application

2. **FURTHER ACTION**

If a demand for international preliminary examination is made, this opinion will be considered to be a written opinion of the International Preliminary Examining Authority ("IPEA") except that this does not apply where the applicant chooses an Authority other than this one to be the IPEA and the chosen IPEA has notified the International Bureau under Rule 66.1*bis*(b) that written opinions of this International Searching Authority will not be so considered.

If this opinion is, as provided above, considered to be a written opinion of the IPEA, the applicant is invited to submit to the IPEA a written reply together, where appropriate, with amendments, before the expiration of 3 months from the date of mailing of Form PCT/ISA/220 or before the expiration of 22 months from the priority date, whichever expires later.

For further options, see Form PCT/ISA/220.

Name and mailing address of the ISA	Date of completion of this opinion	Authorized Officer
AUSTRALIAN PATENT OFFICE PO BOX 200, WODEN ACT 2606, AUSTRALIA E-mail address: pct@ipaustralia.gov.au Facsimile No. +61 2 6283 7999	31 October 2011	**PRADNYA SATARKAR** AUSTRALIAN PATENT OFFICE (ISO 9001 Quality Certified Service) Telephone No. +61 2 6283 2751

RECEIVED
NOV 17 2011
By

Form PCT/ISA/237 (Cover sheet) (July 2011)

WRITTEN OPINION OF THE INTERNATIONAL SEARCHING AUTHORITY

International application No.

PCT/US2011/049003

Box No. I **Basis of this opinion**

1. With regard to the **language,** this opinion has been established on the basis of:

   [X] The international application in the language in which it was filed

   [ ] A translation of the international application into, , which is the language of a translation furnished for the purposes of international search (under Rules 12.3(a) and 23.1(b)).

2. [ ] This opinion has been established taking into account **the rectification of an obvious mistake** authorized by or notified to this Authority under Rule 91 (Rule 43*bis*.1(a))

3. With regard to any **nucleotide and/or amino acid sequence** disclosed in the international application, this opinion has been established on the basis of a sequence listing filed or furnished:

   a. (means)

   [ ] on paper

   [ ] in electronic form

   b. (time)

   [ ] in the international application as filed

   [ ] together with the international application in electronic form

   [ ] subsequently to this Authority for the purposes of search

4. [ ] In addition, in the case that more than one version or copy of a sequence listing has been filed or furnished, the required statements that the information in the subsequent or additional copies is identical to that in the application as filed or does not go beyond the application as filed, as appropriate, were furnished.

5. Additional comments:

IPR2024-00135
Petitioners' Ex. 1002
Ex.1002.00065

WRITTEN OPINION OF THE INTERNATIONAL SEARCHING AUTHORITY

International application No.

PCT/US2011/049003

Box No. V **Reasoned statement under Rule 43*bis*.1(a)(i) with regard to novelty, inventive step or industrial applicability; citations and explanations supporting such statement**

1. Statement

Novelty (N)	Claims **1-27**	**YES**
	Claims **NONE**	**NO**
Inventive step (IS)	Claims **1-27**	**YES**
	Claims **NONE**	**NO**
Industrial applicability (IA)	Claims **1-27**	**YES**
	Claims **NONE**	**NO**

2. Citations and explanations:

The following documents identified in the International Search Report have been considered for the purposes of this report:

(D1): US 2006/0223573 A1 (JALALI) 05 October 2006
(D2): US 2002/0137538 A1 (CHEN et al.) 26 September 2002

NOVELTY (N)

D1, the closest prior art document discloses network coverage for a group of devices in an area (Figure 4) comprising providing a first coverage configuration and providing a second coverage configuration (Paragraph [0051]), wherein: providing the first coverage configuration includes transmitting a first beam of a first network that is configured to provide coverage for the group of devices; and providing the second coverage configuration includes transmitting a second beam of the first network that is narrower than the first beam (Paragraph [0052]). However, D1 fails to disclose that the network coverage cycles over time through a coverage sequence and also that the second coverage provides coverage to at least one continuous use device of the group of devices, and providing coverage by a second network to a plurality of interval use devices of the group of devices.
Therefore the subject matter of all the claims **1-27** is new and meets the requirements of Article 33(2) of the PCT with regard to novelty.

INVENTIVE STEP (IS)

The invention defined in claims 1-27 is not obvious in the light of any of the cited documents nor is it disclosed in any obvious combination of them especially the features of 'the network coverage cycling over time through a coverage sequence and also that the second coverage providing coverage to at least one continuous use device of the group of devices, and providing coverage by a second network to a plurality of interval use devices of the group of devices' are not disclosed.
It is also considered that these features would not be obvious to a person skilled in the art in the light of common general knowledge either by itself or in combination with any of these documents.
Therefore the subject matter of claims **1-27** is not obvious and meets the requirements of Article 33(3) of the PCT with regard to inventive step.

INDUSTRIAL APPLICABILITY (IA)

The invention defined in claims **1-27** is considered to meet the requirements of Industrial Applicability under Article 33(4) of the PCT because it can be made by, or used in, industry.

Electronic Acknowledgement Receipt

EFS ID:	12011103
Application Number:	13321792
International Application Number:	
Confirmation Number:	5874
Title of Invention:	NETWORK COVERAGE BY CYCLING THROUGH BEAM SHAPE COVERAGE CONFIGURATIONS
First Named Inventor/Applicant Name:	Ezekiel Kruglick
Customer Number:	65638
Filer:	Blayne Donnis Green/Lindsey Hunt
Filer Authorized By:	Blayne Donnis Green
Attorney Docket Number:	006.P090
Receipt Date:	06-FEB-2012
Filing Date:	
Time Stamp:	18:25:59
Application Type:	U.S. National Stage under 35 USC 371

Payment information:

Submitted with Payment	no

File Listing:

Document Number	Document Description	File Name	File Size(Bytes)/ Message Digest	Multi Part /.zip	Pages (if appl.)
1	Petition to make Special under PCT-Patent Pros Hwy	PCT_PPH_006_P090.pdf	667761 b319de33dee12c9d0f4266b482a81c1a094ed625	no	3

Warnings:

Information:

2	Claims	Claims_006_PCT090.pdf	86172 150b261aa8325b2050b9c69d8583ee1b77c4e33e	no	9
Warnings:					
Information:					
3	Petition to make Special under PCT-Patent Pros Hwy	Copy_ISR_WO_006_P090.pdf	941358 7eef34d7b379c783210f98626075dac4d0f5a344	no	8
Warnings:					
Information:					
			Total Files Size (in bytes):	1695291	

This Acknowledgement Receipt evidences receipt on the noted date by the USPTO of the indicated documents, characterized by the applicant, and including page counts, where applicable. It serves as evidence of receipt similar to a Post Card, as described in MPEP 503.

<u>New Applications Under 35 U.S.C. 111</u>
If a new application is being filed and the application includes the necessary components for a filing date (see 37 CFR 1.53(b)-(d) and MPEP 506), a Filing Receipt (37 CFR 1.54) will be issued in due course and the date shown on this Acknowledgement Receipt will establish the filing date of the application.

<u>National Stage of an International Application under 35 U.S.C. 371</u>
If a timely submission to enter the national stage of an international application is compliant with the conditions of 35 U.S.C. 371 and other applicable requirements a Form PCT/DO/EO/903 indicating acceptance of the application as a national stage submission under 35 U.S.C. 371 will be issued in addition to the Filing Receipt, in due course.

<u>New International Application Filed with the USPTO as a Receiving Office</u>
If a new international application is being filed and the international application includes the necessary components for an international filing date (see PCT Article 11 and MPEP 1810), a Notification of the International Application Number and of the International Filing Date (Form PCT/RO/105) will be issued in due course, subject to prescriptions concerning national security, and the date shown on this Acknowledgement Receipt will establish the international filing date of the application.

UNITED STATES PATENT AND TRADEMARK OFFICE

Commissioner for Patents
United States Patent and Trademark Office
P.O. Box 1450
Alexandria, VA 22313-1450
www.uspto.gov

OMIKRON IP LAW GROUP
16325 BOONES FERRY RD.
SUITE 204
LAKE OSWEGO OR 97035

MAILED
MAR 07 2012
OFFICE OF PETITIONS

In re Application of:	: DECISION ON REQUEST TO
Ezekiel Kruglick	: PARTICIPATE IN THE PATENT
Application No. 13/321,792	: PROSECUTION HIGHWAY
Date Deposited: November 21, 2011	: PROGRAM AND PETITION
Attorney Docket No. 006.P090	: TO MAKE SPECIAL UNDER
	: 37 CFR 1.102(a)

This is a decision on the second request to participate in the PCT Patent Prosecution Highway (PCT-PPH) pilot program and the petition under 37 CFR 1.102(a), filed on February 6, 2012 to make the above-identified application special.

The request and petition are **GRANTED**.

Discussion

A grantable request to participate in the PCT-PPH pilot program and petition to make special require:

(1) The U.S. application must have an eligible relationship to one or more PCT applications where the ISA or IPEA are the JPO, EPO, KIPO, NPI, NBPR, or USPTO;

(2) At least one claim in the PCT application has novelty, inventive step, and industrial applicability and must be free of any observations in Box VIII in the latest work product in the international stage or applicant must identify and explain why the claim(s) is/are not subject to the observation in Box VIII;

(3) Applicant must submit a copy of the claim(s) from the PCT application(s) that have novelty, inventive step, and industrial applicability along with an English translation thereof and a statement that the English translation is accurate, if the claims are not in the English language;

(4) All the claims in the U.S. application must sufficiently correspond or be amended to sufficiently correspond to the claim(s) that have novelty, inventive step, and industrial applicability in the PCT application(s);

(5) Examination of the U.S. application has not begun;

(6) Applicant must submit a copy of the latest international work product from the PCT application indicating that the claim(s) have novelty, inventive step, and industrial applicability along with an English translation thereof and a statement that the English translation is accurate if the latest international work product is not in the English language;

(7) Applicant must submit an IDS listing the documents cited by the PCT examiner in the international work product along with copies of documents except U.S. patents or U.S. patent application publications.

The request to participate in the PCT-PPH pilot program and petition comply with the above requirements. Accordingly, the above-identified application has been accorded "special" status.

Telephone inquiries concerning this decision should be directed to Joan Olszewski at 571-272-7751.

All other inquiries concerning the examination or status of the application is accessible in the PAIR system at http://www.uspto.gov/ebc.index.html.

This application will be forwarded to the examiner for action on the merits commensurate with this decision once this application's formality reviews have been completed.

/dab/
David Bucci
Petitions Examiner
Office of Petitions

PATENT APPLICATION FEE DETERMINATION RECORD

Substitute for Form PTO-875

Application or Docket Number
13/321,792

APPLICATION AS FILED - PART I

FOR	(Column 1) NUMBER FILED	(Column 2) NUMBER EXTRA	SMALL ENTITY RATE($)	SMALL ENTITY FEE($)	OR	OTHER THAN SMALL ENTITY RATE($)	OTHER THAN SMALL ENTITY FEE($)
BASIC FEE (37 CFR 1.16(a), (b), or (c))	N/A	N/A	N/A			N/A	380
SEARCH FEE (37 CFR 1.16(k), (i), or (m))	N/A	N/A	N/A			N/A	490
EXAMINATION FEE (37 CFR 1.16(o), (p), or (q))	N/A	N/A	N/A			N/A	250
TOTAL CLAIMS (37 CFR 1.16(i))	27 minus 20 =	* 7			OR	x 60 =	420
INDEPENDENT CLAIMS (37 CFR 1.16(h))	5 minus 3 =	* 2				x 250 =	500
APPLICATION SIZE FEE (37 CFR 1.16(s))	If the specification and drawings exceed 100 sheets of paper, the application size fee due is $310 ($155 for small entity) for each additional 50 sheets or fraction thereof. See 35 U.S.C. 41(a)(1)(G) and 37 CFR 1.16(s).						0.00
MULTIPLE DEPENDENT CLAIM PRESENT (37 CFR 1.16(j))							0.00
* If the difference in column 1 is less than zero, enter "0" in column 2.			TOTAL			TOTAL	2040

APPLICATION AS AMENDED - PART II

		(Column 1) CLAIMS REMAINING AFTER AMENDMENT		(Column 2) HIGHEST NUMBER PREVIOUSLY PAID FOR	(Column 3) PRESENT EXTRA	SMALL ENTITY RATE($)	SMALL ENTITY ADDITIONAL FEE($)	OR	OTHER THAN SMALL ENTITY RATE($)	OTHER THAN SMALL ENTITY ADDITIONAL FEE($)
AMENDMENT A	Total (37 CFR 1.16(i))	*	Minus	**	=	x =		OR	x =	
AMENDMENT A	Independent (37 CFR 1.16(h))	*	Minus	***	=	x =		OR	x =	
AMENDMENT A	Application Size Fee (37 CFR 1.16(s))									
AMENDMENT A	FIRST PRESENTATION OF MULTIPLE DEPENDENT CLAIM (37 CFR 1.16(j))							OR		
						TOTAL ADD'L FEE		OR	TOTAL ADD'L FEE	

		(Column 1) CLAIMS REMAINING AFTER AMENDMENT		(Column 2) HIGHEST NUMBER PREVIOUSLY PAID FOR	(Column 3) PRESENT EXTRA	RATE($)	ADDITIONAL FEE($)		RATE($)	ADDITIONAL FEE($)
AMENDMENT B	Total (37 CFR 1.16(i))	*	Minus	**	=	x =		OR	x =	
AMENDMENT B	Independent (37 CFR 1.16(h))	*	Minus	***	=	x =		OR	x =	
AMENDMENT B	Application Size Fee (37 CFR 1.16(s))									
AMENDMENT B	FIRST PRESENTATION OF MULTIPLE DEPENDENT CLAIM (37 CFR 1.16(j))							OR		
						TOTAL ADD'L FEE		OR	TOTAL ADD'L FEE	

* If the entry in column 1 is less than the entry in column 2, write "0" in column 3.
** If the "Highest Number Previously Paid For" IN THIS SPACE is less than 20, enter "20".
*** If the "Highest Number Previously Paid For" IN THIS SPACE is less than 3, enter "3".
The "Highest Number Previously Paid For" (Total or Independent) is the highest found in the appropriate box in column 1.

UNITED STATES PATENT AND TRADEMARK OFFICE

UNITED STATES DEPARTMENT OF COMMERCE
United States Patent and Trademark Office
Address: COMMISSIONER FOR PATENTS
P.O. Box 1450
Alexandria, Virginia 22313-1450
www.uspto.gov

U.S. APPLICATION NUMBER NO.	FIRST NAMED APPLICANT	ATTY. DOCKET NO.
13/321,792	Ezekiel Kruglick	006.P090

65638
OMIKRON IP LAW GROUP
16325 Boones Ferry Rd.
SUITE 204
LAKE OSWEGO, OR 97035

INTERNATIONAL APPLICATION NO.	
PCT/US11/49003	
I.A. FILING DATE	PRIORITY DATE
08/24/2011	

CONFIRMATION NO. 5874
371 FORMALITIES LETTER

OC000000053475080

Date Mailed: 04/02/2012

NOTIFICATION OF MISSING REQUIREMENTS UNDER 35 U.S.C. 371 IN THE UNITED STATES DESIGNATED/ELECTED OFFICE (DO/EO/US)

The following items have been submitted by the applicant or the IB to the United States Patent and Trademark Office as a Designated Office (37 CFR 1.494):

- Copy of the International Application filed on 11/21/2011
- English Translation of the IA filed on 11/21/2011
- Copy of the International Search Report filed on 11/21/2011
- Information Disclosure Statements filed on 11/21/2011
- Oath or Declaration filed on 11/21/2011
- Request for Immediate Examination filed on 11/21/2011
- U.S. Basic National Fees filed on 11/21/2011

The following items **MUST** be furnished within the period set forth below in order to complete the requirements for acceptance under 35 U.S.C. 371:

- Translation of the application into English. The current translation of the application into English is defective as described below. Note a processing fee will be required if submitted later than 30 months from the priority date.
  - The specication pages are missing for the English translation that were filed on 11/21/2012

ALL OF THE ITEMS SET FORTH ABOVE MUST BE SUBMITTED WITHIN TWO (2) MONTHS FROM THE DATE OF THIS NOTICE OR BY 32 MONTHS FROM THE PRIORITY DATE FOR THE APPLICATION, WHICHEVER IS LATER. FAILURE TO PROPERLY RESPOND WILL RESULT IN ABANDONMENT.

The time period set above may be extended by filing a petition and fee for extension of time under the provisions of 37 CFR 1.136(a).

Applicant is reminded that any communications to the United States Patent and Trademark Office must be mailed to the address given in the heading and include the U.S. application no. shown above (37 CFR 1.5)

Registered users of EFS-Web may alternatively submit their reply to this notice via EFS-Web.
https://sportal.uspto.gov/authenticate/AuthenticateUserLocalEPF.html

FORM PCT/DO/EO/905 (371 Formalities Notice)

IPR2024-00135
Petitioners' Ex. 1002
Ex.1002.00072

For more information about EFS-Web please call the USPTO Electronic Business Center at **1-866-217-9197** or visit our website at http://www.uspto.gov/ebc.

If you are not using EFS-Web to submit your reply, you must include a copy of this notice.

PAULETTE R KIDWELL

Telephone: (571) 272-0398

FORM PCT/DO/EO/905 (371 Formalities Notice)

MULTIPLE DEPENDENT CLAIM FEE CALCULATION SHEET

Substitute for Form PTO-1360
(For use with Form PTO/SB/06)

Application Number: 13321792

Filing Date:

Applicant(s): Ezekiel Kruglick

* May be used for additional claims or amendments

CLAIMS	AS FILED		AFTER FIRST AMENDMENT		AFTER SECOND AMENDMENT	
	Indep	Depend	Indep	Depend	Indep	Depend
1	1					
2		1				
3		1				
4		1				
5		1				
6		1				
7		1				
8		1				
9		1				
10		1				
11		1				
12		1				
13		1				
14	1					
15		1				
16		1				
17	1					
18		1				
19		1				
20	1					
21		1				
22		1				
23	1					
24		1				
25		1				
26		1				
27		1				
28						
29						
30						
31						
32						
33						
34						
35						
36						
37						
38						
39						
40						
41						
42						
43						
44						
45						
46						
47						
48						
49						
50						
Total Indep	5		0		0	
Total Depend	22		0		0	
Total Claims	27		0		0	

	*		*		*	
	Indep	Depend	Indep	Depend	Indep	Depend
51						
52						
53						
54						
55						
56						
57						
58						
59						
60						
61						
62						
63						
64						
65						
66						
67						
68						
69						
70						
71						
72						
73						
74						
75						
76						
77						
78						
79						
80						
81						
82						
83						
84						
85						
86						
87						
88						
89						
90						
91						
92						
93						
94						
95						
96						
97						
98						
99						
100						

UNITED STATES PATENT AND TRADEMARK OFFICE

UNITED STATES DEPARTMENT OF COMMERCE
United States Patent and Trademark Office
Address: COMMISSIONER FOR PATENTS
P.O. Box 1450
Alexandria, Virginia 22313-1450
www.uspto.gov

U.S. APPLICATION NUMBER NO.	FIRST NAMED APPLICANT	ATTY. DOCKET NO.
13/321,792	Ezekiel Kruglick	006.P090

65638
OMIKRON IP LAW GROUP
16325 Boones Ferry Rd.
SUITE 204
LAKE OSWEGO, OR 97035

INTERNATIONAL APPLICATION NO.	
PCT/US11/49003	
I.A. FILING DATE	PRIORITY DATE
08/24/2011	

CONFIRMATION NO. 5874
371 WITHDRAWAL NOTICE

OC000000053660288

Date Mailed: 05/02/2012

Letter Regarding a New Notice and/or the Status of the Application

If a new notice or Filing Receipt is enclosed, applicant may disregard the previous notice mailed on 04/02/2012. The time period for reply runs from the mail date of the new notice. Within the time period for reply, applicant is required to file a reply in compliance with the requirements set forth in the new notice to avoid abandonment of the application.

Registered users of EFS-Web may alternatively submit their reply to this notice via EFS-Web. https://sportal.uspto.gov/authenticate/AuthenticateUserLocalEPF.html

For more information about EFS-Web please call the USPTO Electronic Business Center at **1-866-217-9197** or visit our website at http://www.uspto.gov/ebc.

If the reply is not filed electronically via EFS-Web, the reply must be accompanied by a copy of the new notice.

If the Office previously granted a petition to withdraw the holding of abandonment or a petition to revive under 37 CFR 1.137, the status of the application has been returned to pending status.

PAULETTE R KIDWELL

Telephone: (571) 272-0398

FORM PCT/DO/EO/WITH (371 Withdrawal Notice)

UNITED STATES PATENT AND TRADEMARK OFFICE

UNITED STATES DEPARTMENT OF COMMERCE
United States Patent and Trademark Office
Address: COMMISSIONER FOR PATENTS
P.O. Box 1450
Alexandria, Virginia 22313-1450
www.uspto.gov

U.S. APPLICATION NUMBER NO.	FIRST NAMED APPLICANT	ATTY. DOCKET NO.
13/321,792	Ezekiel Kruglick	006.P090

65638
OMIKRON IP LAW GROUP
16325 Boones Ferry Rd.
SUITE 204
LAKE OSWEGO, OR 97035

INTERNATIONAL APPLICATION NO.	
PCT/US11/49003	
I.A. FILING DATE	PRIORITY DATE
08/24/2011	

CONFIRMATION NO. 5874
371 FORMALITIES LETTER

OC000000054751247

Date Mailed: 06/12/2012

NOTICE OF INSUFFICIENT BASIC NATIONAL FEE REQUIRED AND/OR MISSING COPY OF INTERNATIONAL APPLICATION UNDER 35 U.S.C 371 AND 37 CFR 1.495

Indication of Small Entity Status has not been received.

The following items must be furnished:

Copy of International Application, which includes a copy of the Request Form, submitted to the International Bureau is missing. A copy of the International Application must be provided prior to 30 months from the priority date to avoid abandonment. Extensions of time under the provisions of 37 CFR 1.136 are not available for compliance with the requirements of 37 CFR 1.495(b). The international application may not be submitted via facsimile transmission.

The basic national fee to enter the national stage in the United States of America under 35 U.S.C. 371 must be paid by 30 months from the priority date (37 CFR 1.495(b)(2)).

If the proper basic national fee is not paid within 30 months from the priority date, the international application will become ABANDONED as to the United States of America, and will not be accepted for national examination.

The amount required shown above reflects the correct fee as of the date of this Notice. If the amount changes prior to payment, applicant must pay the revised amount.

The current basic national fees are listed at 37 CFR 1.492(a). In addition, current PCT related fees are listed in each weekly issue of the Official Gazette of the United States Patent and Trademark Office and the amount of the fees can be obtained from the USPTO 's web site www.uspto.gov or by contacting the Public Service Center at (703) 308-4357.

Extensions of time under the provisions of 37 CFR 1.136 are not available for compliance with the requirements of 37 CFR 1.495(b)(2).

For filing the basic national fee, the first class certificate of mailing procedure of 37 CFR 1.8 is NOT available to establish the date of mailing as the date of receipt in the USPTO (see 37 CFR 1.8(a)(2)(i)(F)). The Express Mail procedure of 37 CFR 1.10 may be used.

The basic national fee may not be submitted via facsimile transmission.

Applicant is reminded that any communications to the United States Patent and Trademark Office must be mailed to the address given in the heading and include the U.S. application no. shown above (37 CFR 1.5)

FORM PCT/DO/EO/912 (371 Formalities Notice)

IPR2024-00135
Petitioners' Ex. 1002
Ex.1002.00076

Registered users of EFS-Web may alternatively submit their reply to this notice via EFS-Web.
https://sportal.uspto.gov/authenticate/AuthenticateUserLocalEPF.html

For more information about EFS-Web please call the USPTO Electronic Business Center at **1-866-217-9197** or visit our website at http://www.uspto.gov/ebc.

If you are not using EFS-Web to submit your reply, you must include a copy of this notice.

PAULETTE R KIDWELL

Telephone: (571) 272-0398

FORM PCT/DO/EO/912 (371 Formalities Notice)

UNITED STATES PATENT AND TRADEMARK OFFICE

UNITED STATES DEPARTMENT OF COMMERCE
United States Patent and Trademark Office
Address: COMMISSIONER FOR PATENTS
P.O. Box 1450
Alexandria, Virginia 22313-1450
www.uspto.gov

U.S. APPLICATION NUMBER NO.	FIRST NAMED APPLICANT	ATTY. DOCKET NO.
13/321,792	Ezekiel Kruglick	006.P090

65638
OMIKRON IP LAW GROUP
16325 Boones Ferry Rd.
SUITE 204
LAKE OSWEGO, OR 97035

INTERNATIONAL APPLICATION NO.	
PCT/US11/49003	
I.A. FILING DATE	PRIORITY DATE
08/24/2011	

CONFIRMATION NO. 5874
371 WITHDRAWAL NOTICE

OC000000053660288

Date Mailed: 06/12/2012

Letter Regarding a New Notice and/or the Status of the Application

If a new notice or Filing Receipt is enclosed, applicant may disregard the previous notice mailed on 04/02/2012. The time period for reply runs from the mail date of the new notice. Within the time period for reply, applicant is required to file a reply in compliance with the requirements set forth in the new notice to avoid abandonment of the application.

Registered users of EFS-Web may alternatively submit their reply to this notice via EFS-Web. https://sportal.uspto.gov/authenticate/AuthenticateUserLocalEPF.html

For more information about EFS-Web please call the USPTO Electronic Business Center at **1-866-217-9197** or visit our website at http://www.uspto.gov/ebc.

If the reply is not filed electronically via EFS-Web, the reply must be accompanied by a copy of the new notice.

If the Office previously granted a petition to withdraw the holding of abandonment or a petition to revive under 37 CFR 1.137, the status of the application has been returned to pending status.

PAULETTE R KIDWELL

Telephone: (571) 272-0398

FORM PCT/DO/EO/WITH (371 Withdrawal Notice)

IPR2024-00135
Petitioners' Ex. 1002
Ex.1002.00078

PATENT APPLICATION FEE DETERMINATION RECORD

Substitute for Form PTO-875

Application or Docket Number
13/321,792

APPLICATION AS FILED - PART I

FOR	(Column 1) NUMBER FILED	(Column 2) NUMBER EXTRA	SMALL ENTITY RATE($)	SMALL ENTITY FEE($)	OR	OTHER THAN SMALL ENTITY RATE($)	OTHER THAN SMALL ENTITY FEE($)
BASIC FEE (37 CFR 1.16(a), (b), or (c))	N/A	N/A	N/A			N/A	380
SEARCH FEE (37 CFR 1.16(k), (i), or (m))	N/A	N/A	N/A			N/A	490
EXAMINATION FEE (37 CFR 1.16(o), (p), or (q))	N/A	N/A	N/A			N/A	250
TOTAL CLAIMS (37 CFR 1.16(i))	0 minus 20 =	*			OR	x 60 =	0.00
INDEPENDENT CLAIMS (37 CFR 1.16(h))	0 minus 3 =	*				x 250 =	0.00
APPLICATION SIZE FEE (37 CFR 1.16(s))	If the specification and drawings exceed 100 sheets of paper, the application size fee due is $310 ($155 for small entity) for each additional 50 sheets or fraction thereof. See 35 U.S.C. 41(a)(1)(G) and 37 CFR 1.16(s).						0.00
MULTIPLE DEPENDENT CLAIM PRESENT (37 CFR 1.16(j))							0.00
* If the difference in column 1 is less than zero, enter "0" in column 2.			TOTAL			TOTAL	1120

APPLICATION AS AMENDED - PART II

AMENDMENT A

	(Column 1) CLAIMS REMAINING AFTER AMENDMENT		(Column 2) HIGHEST NUMBER PREVIOUSLY PAID FOR	(Column 3) PRESENT EXTRA	SMALL ENTITY RATE($)	SMALL ENTITY ADDITIONAL FEE($)	OR	OTHER THAN SMALL ENTITY RATE($)	OTHER THAN SMALL ENTITY ADDITIONAL FEE($)
Total (37 CFR 1.16(i))	*	Minus	**	=	x =		OR	x =	
Independent (37 CFR 1.16(h))	*	Minus	***	=	x =		OR	x =	
Application Size Fee (37 CFR 1.16(s))									
FIRST PRESENTATION OF MULTIPLE DEPENDENT CLAIM (37 CFR 1.16(j))							OR		
					TOTAL ADD'L FEE		OR	TOTAL ADD'L FEE	

AMENDMENT B

	(Column 1) CLAIMS REMAINING AFTER AMENDMENT		(Column 2) HIGHEST NUMBER PREVIOUSLY PAID FOR	(Column 3) PRESENT EXTRA	RATE($)	ADDITIONAL FEE($)	OR	RATE($)	ADDITIONAL FEE($)
Total (37 CFR 1.16(i))	*	Minus	**	=	x =		OR	x =	
Independent (37 CFR 1.16(h))	*	Minus	***	=	x =		OR	x =	
Application Size Fee (37 CFR 1.16(s))									
FIRST PRESENTATION OF MULTIPLE DEPENDENT CLAIM (37 CFR 1.16(j))							OR		
					TOTAL ADD'L FEE		OR	TOTAL ADD'L FEE	

* If the entry in column 1 is less than the entry in column 2, write "0" in column 3.
** If the "Highest Number Previously Paid For" IN THIS SPACE is less than 20, enter "20".
*** If the "Highest Number Previously Paid For" IN THIS SPACE is less than 3, enter "3".
The "Highest Number Previously Paid For" (Total or Independent) is the highest found in the appropriate box in column 1.

Electronic Acknowledgement Receipt

EFS ID:	10808080
Application Number:	
International Application Number:	PCT/US11/49003
Confirmation Number:	5440
Title of Invention:	NETWORK COVERAGE BY CYCLING THROUGH BEAM SHAPE COVERAGE CONFIGURATIONS
First Named Inventor/Applicant Name:	Empire Technology Development LLC
Customer Number:	65638
Correspondence Address:	Omikron IP Law Group Attn: Blayne D. Green 16325 Boones Ferry Road Suite 204 - Lake Oswego OR 97035 US 5037199473 blayne.green@omikronlaw.com
Filer:	Blayne Donnis Green/Lindsey Hunt
Filer Authorized By:	Blayne Donnis Green
Attorney Docket Number:	006.PCT090
Receipt Date:	24-AUG-2011
Filing Date:	
Time Stamp:	19:13:47
Application Type:	International Application for filing in the US receiving office

Payment information:

Submitted with Payment	yes

Payment Type	Credit Card
Payment was successfully received in RAM	$4128
RAM confirmation Number	7475
Deposit Account	
Authorized User	

File Listing:

Document Number	Document Description	File Name	File Size(Bytes)/ Message Digest	Multi Part /.zip	Pages (if appl.)
1	PCT-Transmittal Letter	Transmittal_Letter_006_PCT090.pdf	512240 055c9da7a73c1bdcf39c0c1661b3bb9bdd9c8970	no	1
Warnings:					
Information:					
2	RO/101 - Request form for new IA - Conventional	PCT_Request_006_PCT090.pdf	2565218 68764a9b1abe20d56a6f3a7915088daeadb2631b	no	6
Warnings:					
Information:					
3		Specification_006_PCT090.pdf	265103 a6c54f50b55cdbcf91d2b2829103a52a0f38403f	yes	53

Multipart Description/PDF files in .zip description

Document Description	Start	End
Specification	1	43
Claims	44	52
Abstract	53	53

Warnings:					
Information:					
4	Drawings-only black and white line drawings	Figures_006_PCT090.pdf	546120 870b0cf4d77852cd54ab133b692b4ccf82f4aa3a	no	7
Warnings:					
Information:					
5	RO/101 - Annex (fee calculation sheet)	Fee_Calculation_Sheet_006_PCT090.pdf	403753 c48abd9fd259d287db68687636409a9408660768	no	1
Warnings:					
Information:					

6	Fee Worksheet (SB06)	fee-info.pdf	36789 b6c2c48db3eae5bd26a3816c2ef2d83cf2eb417d	no	2
Warnings:					
Information:					
			Total Files Size (in bytes):	4329223	

This Acknowledgement Receipt evidences receipt on the noted date by the USPTO of the indicated documents, characterized by the applicant, and including page counts, where applicable. It serves as evidence of receipt similar to a Post Card, as described in MPEP 503.

<u>New Applications Under 35 U.S.C. 111</u>
If a new application is being filed and the application includes the necessary components for a filing date (see 37 CFR 1.53(b)-(d) and MPEP 506), a Filing Receipt (37 CFR 1.54) will be issued in due course and the date shown on this Acknowledgement Receipt will establish the filing date of the application.

<u>National Stage of an International Application under 35 U.S.C. 371</u>
If a timely submission to enter the national stage of an international application is compliant with the conditions of 35 U.S.C. 371 and other applicable requirements a Form PCT/DO/EO/903 indicating acceptance of the application as a national stage submission under 35 U.S.C. 371 will be issued in addition to the Filing Receipt, in due course.

<u>New International Application Filed with the USPTO as a Receiving Office</u>
If a new international application is being filed and the international application includes the necessary components for an international filing date (see PCT Article 11 and MPEP 1810), a Notification of the International Application Number and of the International Filing Date (Form PCT/RO/105) will be issued in due course, subject to prescriptions concerning national security, and the date shown on this Acknowledgement Receipt will establish the international filing date of the application.

PTO-1382 (Rev. 08-2008)
Approved for use through 02/28/2010. OMB 0651-0021
U.S. Patent and Trademark Office; U.S. DEPARTMENT OF COMMERCE
Under the Paperwork Reduction Act of 1995, no persons are required to respond to a collection of information unless it displays a valid OMB control number.

TRANSMITTAL LETTER TO THE UNITED STATES RECEIVING OFFICE

Express Mail mailing number: via EFS-Web	Date of deposit: 24.08.2011
File reference no.: 006.PCT090	International application no. (if known):
Customer Number[1]: 65638	Earliest priority date claimed (Day/Month/Year):
Title of the invention: Network Coverage by Cycling Through Beam Shape Coverage Configurations	

[1] **Customer Number will allow access to the application in Private PAIR but cannot be used to establish or change the correspondence address.**

☑ **This is a new International Application**

SCREENING DISCLOSURE INFORMATION:

In order to assist in screening the accompanying international application for purposes of determining whether a license for foreign transmittal should and could be granted and for other purposes, the following information is supplied. (check as boxes as apply):

☐ The invention disclosed was **not** made in the United States of America.

☐ There is no prior U.S. application relating to this invention.

☐ The following prior U.S. application(s) contain subject matter which is related to the invention disclosed in the attached international application. (*NOTE: priority to these applications may or may not be claimed on the Request (form PCT/RO/101) and this listing does **not** constitute a claim for priority.*)

application no.		filed on	
application no.		filed on	

☐ The present international application contains additional subject matter not found in the prior U.S. application(s) identified above. The additional subject matter is found on pages _____ and ☐ **DOES NOT ALTER** ☐ **MIGHT BE CONSIDERED TO ALTER** the general nature of the invention in a manner which would require the U.S. application to have been made available for inspection by the appropriate defense agencies under 35 U.S.C. 181 and 37 C.F.R. 5.15.

Itemized list of contents

Sheets of Request form: 6	Check no.:
Sheets of description (excluding sequence listing): 43	Return receipt postcard:
Sheets of claims: 9	Power of attorney:
Sheets of abstract: 1	Certified copy of priority document (specify):
Sheets of drawings: 7	Other (specify): Fee Calculation Sheet (1 sheet)
Sheets of sequence listing:	
Sequence listing diskette/CD:	
Tables related to sequence listing CD:	

The person signing this form is:	☐ Applicant	
	☑ Attorney/Agent (Reg. No.) 56,198	Name of person signing: Blayne D. Green
	☐ Common Representative	Signature: Blayne D Green

This collection of information is required by 37 CFR 1.10 and 1.412. The information is required to obtain or retain a benefit by the public, which is to file (and by the USPTO to process) an application. Confidentiality is governed by 35 U.S.C. 122 and 37 CFR 1.11 and 1.14. This collection is estimated to take 15 minutes to complete, including gathering information, preparing, and submitting the completed form to the USPTO. Time will vary depending upon the individual case. Any comments on the amount of time you require to complete this form and/or suggestions for reducing this burden, should be sent to the Chief Information Officer, U.S. Patent and Trademark Office, U.S. Department of Commerce, P.O. Box 1450, Alexandria, VA 22313-1450. DO NOT SEND FEES OR COMPLETED FORMS TO THIS ADDRESS.
SEND TO: Mail Stop PCT, Commissioner for Patents, P.O. Box 1450, Alexandria, VA 22313-1450.

IPR2024-00135
Petitioners' Ex. 1002
Ex.1002.00083

PCT

REQUEST

The undersigned requests that the present international application be processed according to the Patent Cooperation Treaty.

For receiving Office use only

International Application No.

International Filing Date

Name of receiving Office and "PCT International Application"

Applicant's or agent's file reference *(if desired) (12 characters maximum)* 006.PCT090

Box No. I TITLE OF INVENTION

NETWORK COVERAGE BY CYCLING THROUGH BEAM SHAPE COVERAGE CONFIGURATIONS

Box No. II APPLICANT ☐ This person is also inventor

Name and address: *(Family name followed by given name; for a legal entity, full official designation. The address must include postal code and name of country. The country of the address indicated in this Box is the applicant's State (that is, country) of residence if no State of residence is indicated below.)*

EMPIRE TECHNOLOGY DEVELOPMENT LLC
2711 Centerville Road, Suite 400
Wilmington, Delaware
19808
US

Telephone No.

Facsimile No.

Applicant's registration No. with the Office

E-mail authorization: Marking one of the check-boxes below authorizes the receiving Office, the International Searching Authority, the International Bureau and the International Preliminary Examining Authority to use the e-mail address indicated in this Box to send, notifications issued in respect of this international application to that e-mail address if those offices are willing to do so.

☐ as advance copies followed by paper notifications; or ☐ exclusively in electronic form (no paper notifications will be sent).

E-mail address:

State *(that is, country)* of nationality: US

State *(that is, country)* of residence: US

This person is applicant for the purposes of: ☐ all designated States ☒ all designated States except the United States of America ☐ the United States of America only ☐ the States indicated in the Supplemental Box

Box No. III FURTHER APPLICANT(S) AND/OR (FURTHER) INVENTOR(S)

☐ Further applicants and/or (further) inventors are indicated on a continuation sheet.

Box No. IV AGENT OR COMMON REPRESENTATIVE; OR ADDRESS FOR CORRESPONDENCE

The person identified below is hereby/has been appointed to act on behalf of the applicant(s) before the competent International Authorities as: ☒ agent ☐ common representative

Name and address: *(Family name followed by given name; for a legal entity, full official designation. The address must include postal code and name of country.)*

OMIKRON IP LAW GROUP
Attn: Blayne D. Green
16325 Boones Ferry Road Suite 204
Lake Oswego, Oregon 97035
US

Telephone No. 503-719-9473

Facsimile No. 503-305-6760

Agent's registration No. with the Office 56,198

E-mail authorization: Marking one of the check-boxes below authorizes the receiving Office, the International Searching Authority, the International Bureau and the International Preliminary Examining Authority to use the e-mail address indicated in this Box to send, notifications issued in respect of this international application to that e-mail address if those offices are willing to do so.

☒ as advance copies followed by paper notifications; or ☐ exclusively in electronic form (no paper notifications will be sent).

E-mail address: blayne.green@omikronlaw.com

☐ **Address for correspondence:** Mark this check-box where no agent or common representative is/has been appointed and the space above is used instead to indicate a special address to which correspondence should be sent.

IPR2024-00135
Petitioners' Ex. 1002
Ex.1002.00084

Box No. III FURTHER APPLICANT(S) AND/OR (FURTHER) INVENTOR(S)

If none of the following sub-boxes is used, this sheet should not be included in the request.

Name and address: *(Family name followed by given name; for a legal entity, full official designation. The address must include postal code and name of country. The country of the address indicated in this Box is the applicant's State (that is, country) of residence if no State of residence is indicated below.)*

KRUGLICK, Ezekiel
13842 Deergrass Ct
Poway, California 92064
US

This person is:
- [ ] applicant only
- [x] applicant and inventor
- [ ] inventor only *(If this check-box is marked, do not fill in below.)*

Applicant's registration No. with the Office

State *(that is, country)* of nationality: US

State *(that is, country)* of residence: US

This person is applicant for the purposes of:
- [ ] all designated States
- [ ] all designated States except the United States of America
- [x] the United States of America only
- [ ] the States indicated in the Supplemental Box

Name and address: *(Family name followed by given name; for a legal entity, full official designation. The address must include postal code and name of country. The country of the address indicated in this Box is the applicant's State (that is, country) of residence if no State of residence is indicated below.)*

This person is:
- [ ] applicant only
- [ ] applicant and inventor
- [ ] inventor only *(If this check-box is marked, do not fill in below.)*

Applicant's registration No. with the Office

State *(that is, country)* of nationality:

State *(that is, country)* of residence:

This person is applicant for the purposes of:
- [ ] all designated States
- [ ] all designated States except the United States of America
- [ ] the United States of America only
- [ ] the States indicated in the Supplemental Box

Name and address: *(Family name followed by given name; for a legal entity, full official designation. The address must include postal code and name of country. The country of the address indicated in this Box is the applicant's State (that is, country) of residence if no State of residence is indicated below.)*

This person is:
- [ ] applicant only
- [ ] applicant and inventor
- [ ] inventor only *(If this check-box is marked, do not fill in below.)*

Applicant's registration No. with the Office

State *(that is, country)* of nationality:

State *(that is, country)* of residence:

This person is applicant for the purposes of:
- [ ] all designated States
- [ ] all designated States except the United States of America
- [ ] the United States of America only
- [ ] the States indicated in the Supplemental Box

Name and address: *(Family name followed by given name; for a legal entity, full official designation. The address must include postal code and name of country. The country of the address indicated in this Box is the applicant's State (that is, country) of residence if no State of residence is indicated below.)*

This person is:
- [ ] applicant only
- [ ] applicant and inventor
- [ ] inventor only *(If this check-box is marked, do not fill in below.)*

Applicant's registration No. with the Office

State *(that is, country)* of nationality:

State *(that is, country)* of residence:

This person is applicant for the purposes of:
- [ ] all designated States
- [ ] all designated States except the United States of America
- [ ] the United States of America only
- [ ] the States indicated in the Supplemental Box

- [ ] Further applicants and/or (further) inventors are indicated on another continuation sheet.

IPR2024-00135
Petitioners' Ex. 1002
Ex.1002.00085

Box No. V DESIGNATIONS

The filing of this request **constitutes under Rule 4.9(a) the designation** of all Contracting States bound by the PCT on the international filing date, for the grant of every kind of protection available and, where applicable, for the grant of both regional and national patents.

However,

☐ DE Germany **is not designated** for any kind of national protection

☐ JP Japan **is not designated** for any kind of national protection

☐ KR Republic of Korea **is not designated** for any kind of national protection

(The check-boxes above may only be used to exclude (irrevocably) the designations concerned if, at the time of filing or subsequently under Rule 26bis.1, the international application contains in Box No. VI a priority claim to an earlier national application filed in the particular State concerned, in order to avoid the ceasing of the effect, under the national law, of this earlier national application.)

Box No. VI PRIORITY CLAIM

The priority of the following earlier application(s) is hereby claimed:

Filing date of earlier application *(day/month/year)*	Number of earlier application	Where earlier application is:		
		national application: country or Member of WTO	regional application: regional Office	international application: receiving Office
item (1)				
item (2)				
item (3)				

☐ Further priority claims are indicated in the Supplemental Box.

☐ The **International Bureau** is requested to obtain from a digital library, a certified copy of the earlier application(s) *(if the earlier application(s) is available to it from a digital library)* identified above as:*

☐ all items ☐ item (1) ☐ item (2) ☐ item (3) ☐ other, see Supplemental Box

☐ The **receiving Office** is requested to prepare and transmit to the International Bureau a certified copy of the earlier application(s) *(if the earlier application(s) was filed with the Office which for the purposes of this international application is the receiving Office)* or to obtain a certified copy of the earlier application(s) from a digital library and transmit a copy of it to the International Bureau *(if the earlier application(s) is available to the receiving Office from a digital library)*, identified above as:*

☐ all items ☐ item (1) ☐ item (2) ☐ item (3) ☐ other, see Supplemental Box

* Where the certified copy of the earlier application(s) is not stored in a digital library under the number of the earlier application indicated above but under the application number of another application which also claims priority from it, indicate that number in the supplemental sheet (item 4).

Restore the right of priority: the receiving Office is requested to restore the right of priority for the earlier application(s) identified above or in the Supplemental Box as item(s) (_____). *(See also the Notes to Box No. VI; further information **must** be provided to support a request to restore the right of priority.)*

Incorporation by reference: where an element of the international application referred to in Article 11(1)(iii)(d) or (e) or a part of the description, claims or drawings referred to in Rule 20.5(a) is not otherwise contained in this international application but is completely contained in an earlier application whose priority is claimed on the date on which one or more elements referred to in Article 11(1)(iii) were first received by the receiving Office, that element or part is, subject to confirmation under Rule 20.6, incorporated by reference in this international application for the purposes of Rule 20.6.

Box No. VII INTERNATIONAL SEARCHING AUTHORITY

Choice of International Searching Authority (ISA) *(if more than one International Searching Authority is competent to carry out the international search, indicate the Authority chosen; the two-letter code may be used)*:

ISA/ AU

IPR2024-00135
Petitioners' Ex. 1002
Ex.1002.00086

Continuation of Box No. VII USE OF RESULTS OF EARLIER SEARCH, REFERENCE TO THAT SEARCH

☐ The ISA indicated in Box No. VII is requested to take into account the results of the earlier search(es) indicated below (*see also Notes to Box VII; use of results of more than one earlier search*).

Filing date *(day/month/year)* Application Number Country *(or regional Office)*

☐ **Statement (Rule 4.12(ii))**: this international application is the same, or substantially the same, as the application in respect of which the earlier search was carried out except, where applicable, that it is filed in a different language.

☐ **Availability of documents**: the following documents are available to the ISA in a form and manner acceptable to it and therefore do not need to be submitted by the applicant to the ISA (Rule 12*bis*.1(f)):

- ☐ a copy of the results of the earlier search,*
- ☐ a copy of the earlier application,
- ☐ a translation of the earlier application into a language which is accepted by the ISA,
- ☐ a translation of the results of the earlier search into a language which is accepted by the ISA,
- ☐ a copy of any document cited in the results of the earlier search. *(If known, please indicate below the document(s) available to the ISA):*

☐ **Transmit copy of results of earlier search and other documents** *(where the earlier search **was not** carried out by the ISA indicated above but by the same Office as that which is acting as the receiving Office)*: the **receiving Office** is requested to prepare and transmit to the ISA (Rule 12*bis*.1(c)):

- ☐ a copy of the results of the earlier search,*
- ☐ a copy of the earlier application,
- ☐ a copy of any document cited in the results of the earlier search.

* Where the results of the earlier search are neither available from a digital library nor transmitted by the receiving Office, the applicant is required to submit them to the receiving Office (Rule 12*bis*.1(a)) (*See item 11. in the check-list and also Notes to Box No. VII*).

Filing date *(day/month/year)* Application Number Country *(or regional Office)*

☐ **Statement (Rule 4.12(ii))**: this international application is the same, or substantially the same, as the application in respect of which the earlier search was carried out except, where applicable, that it is filed in a different language.

☐ **Availability of documents**: the following documents are available to the ISA in a form and manner acceptable to it and therefore do not need to be submitted by the applicant to the ISA (Rule 12*bis*.1(f)):

- ☐ a copy of the results of the earlier search,*
- ☐ a copy of the earlier application,
- ☐ a translation of the earlier application into a language which is accepted by the ISA,
- ☐ a translation of the results of the earlier search into a language which is accepted by the ISA,
- ☐ a copy of any document cited in the results of the earlier search. *(If known, please indicate below the document(s) available to the ISA):*

☐ **Transmit copy of results of earlier search and other documents** *(where the earlier search **was not** carried out by the ISA indicated above but by the same Office as that which is acting as the receiving Office)*: the **receiving Office** is requested to prepare and transmit to the ISA (Rule 12*bis*.1(c)):

- ☐ a copy of the results of the earlier search,*
- ☐ a copy of the earlier application,
- ☐ a copy of any document cited in the results of the earlier search.

* Where the results of the earlier search are neither available from a digital library nor transmitted by the receiving Office, the applicant is required to submit them to the receiving Office (Rule 12*bis*.1(a)) (*See item 11. in the check-list and also Notes to Box No. VII*).

☐ Further earlier searches are indicated on a continuation sheet.

Box No. VIII DECLARATIONS

The following **declarations** are contained in Boxes Nos. VIII (i) to (v) *(mark the applicable check-boxes below and indicate in the right column the number of each type of declaration)*:

			Number of declarations
☐	Box No. VIII (i)	Declaration as to the identity of the inventor :	
☒	Box No. VIII (ii)	Declaration as to the applicant's entitlement, as at the international filing date, to apply for and be granted a patent :	1
☐	Box No. VIII (iii)	Declaration as to the applicant's entitlement, as at the international filing date, to claim the priority of the earlier application :	
☐	Box No. VIII (iv)	Declaration of inventorship (only for the purposes of the designation of the United States of America) :	
☐	Box No. VIII (v)	Declaration as to non-prejudicial disclosures or exceptions to lack of novelty :	

IPR2024-00135
Petitioners' Ex. 1002
Ex.1002.00087

Box No. VIII (ii) DECLARATION: ENTITLEMENT TO APPLY FOR AND BE GRANTED A PATENT

The declaration must conform to the standardized wording provided for in Section 212; see Notes to Boxes Nos. VIII, VIII (i) to (v) (in general) and the specific Notes to Box No.VIII (ii). If this Box is not used, this sheet should not be included in the request.

Declaration as to the applicant's entitlement, as at the international filing date, to apply for and be granted a patent (Rules 4.17(ii) and 51*bis*.1(a)(ii)), in a case where the declaration under Rule 4.17(iv) is not appropriate:

In relation to this international application,

EMPIRE TECHNOLOGY DEVELOPMENT LLC, is entitled to apply for and be granted a patent by virtue of the following:

an assignment from EZEKIEL KRUGLICK to ARDENT RESEARCH CORPORATION dated 23 August 2011 (23.08.2011) ; and

an assignment from ARDENT RESEARCH CORPORATION to EMPIRE TECHNOLOGY DEVELOPMENT LLC dated 23 August 2011 (23.08.2011).

☐ This declaration is continued on the following sheet, "Continuation of Box No. VIII (ii)".

Sheet No. 6

Box No. IX **CHECK LIST for EFS-Web filings** - this sheet is only to be used when filing an international application with RO/US via **EFS-Web**

This international application **contains** the following:	Number of sheets
(a) request form PCT/RO/101 (including any declarations and supplemental sheets)	6
(b) description (excluding any sequence listing part of the description, see (f), below)	43
(c) claims	9
(d) abstract	1
(e) drawings (if any)	
(f) sequence listing part of the description in the form of an **image file** (e.g. PDF)	7
Total number of sheets (including the sequence listing part of the description if **filed as an image file**)	66

(g) sequence listing part of the description

- ☐ filed in the form of an **Annex C/ST.25 text file**
- ☐ WILL BE filed separately on physical data carrier(s), on the same day and in the form of an **Annex C/ST.25 text file**

Indicate type and number of physical data carrier(s)

This international application is **accompanied by** the following item(s) *(mark the applicable check-boxes below and indicate in right column the number of each item):*	Number of items
1. ☒ fee calculation sheet	1
2. ☐ original separate power of attorney	
3. ☐ original general power of attorney	
4. ☐ copy of general power of attorney; reference number:	
5. ☐ statement explaining lack of signature	
6. ☐ priority document(s) identified in Box No. VI as item(s)	
7. ☐ Translation of international application into *(language)*:	
8. ☐ separate indications concerning deposited microorganism or other biological material	
9. ☐ *(only where item (f) is marked in the left column)* copy of the sequence listing in electronic form (Annex C/ST.25 text file) not forming part of the international application but **furnished only for the purposes of international search** under Rule 13*ter*	
10. ☐ *(only where item (f) is marked in the left column)* a statement confirming that "the information recorded in electronic form submitted under Rule 13*ter* is identical to the sequence listing as contained in the international application" as filed via EFS-Web:	
11. ☐ copy of results of earlier search(es) (Rule 12*bis*.1(a))	
12. ☒ other *(specify)*: Transmittal Letter	1

Figure of the drawings which should accompany the abstract:

Language of filing of the international application: English

Box No. X **SIGNATURE OF APPLICANT, AGENT OR COMMON REPRESENTATIVE**

Next to each signature, indicate the name of the person signing and the capacity in which the person signs (if such capacity is not obvious from reading the request).

Blayne D Green

Blayne D. Green, Reg. No. 56,198

24-AUG-2011

Date

For receiving Office use only

1. Date of actual receipt of the purported international application:
2. Drawings: ☐ received: ☐ not received:
3. Corrected date of actual receipt due to later but timely received papers or drawings completing the purported international application:
4. Date of timely receipt of the required corrections under PCT Article 11(2):
5. International Searching Authority (if two or more are competent): ISA /
6. ☐ Transmittal of search copy delayed until search fee is paid

For International Bureau use only

Date of receipt of the record copy by the International Bureau:

IPR2024-00135
Petitioners' Ex. 1002
Ex.1002.00089

NETWORK COVERAGE BY CYCLING THROUGH BEAM SHAPE COVERAGE CONFIGURATIONS

BACKGROUND

[0001] Unless otherwise indicated herein, the approaches described in this section are not prior art to the claims in this application and are not admitted to be prior art by inclusion in this section.

[0002] In general, wireless communication networks may be becoming populated by devices that include both phone and data functionality. In some wireless communication networks, a wide beam configuration may provide coverage for all the devices in an area (or sector). Such a configuration may provide a relatively low power beam to both active and inactive devices.

IPR2024-00135
Petitioners' Ex. 1002
Ex.1002.00090

SUMMARY

[0003] The present disclosure describes example methods for providing network coverage for a group of devices. Example methods may include cycling over time through a coverage sequence that includes providing a first coverage configuration and providing a second coverage configuration. Providing the first coverage configuration may include transmitting a first beam of a first network that may be configured to provide coverage for the group of devices. Providing the second coverage configuration may include transmitting a second beam of the first network that may be narrower than the first beam and configured to provide coverage to at least one continuous use device of the group of devices, and providing coverage by a second network to a plurality of interval use devices of the group of devices.

[0004] Other example methods may include cycling over time through a coverage sequence that includes providing a first coverage configuration, providing a second coverage configuration, and providing a third coverage configuration. Providing the first coverage configuration may include transmitting a first beam of a first network that may be configured to provide coverage for a first set of the group of devices, and providing coverage by a second network to at least a second set of the group of devices. Providing the second network coverage configuration may include transmitting a second beam of the first network that may be configured to provide coverage for the second set of the group of devices, and providing coverage by the second network to at least the first set of the group of devices. Providing the third

IPR2024-00135
Petitioners' Ex. 1002
Ex.1002.00091

coverage configuration may include transmitting a third beam of the first network that may be narrower than the first beam and configured to provide coverage to at least one continuous use device of the group of devices, and providing coverage by the second network to at least a plurality of interval use devices of the group.

[0005] The present disclosure also describes example machine readable non-transitory media having stored therein instructions that, when executed, cause a device to provide network coverage by cycling over time through a coverage sequence that includes providing a first coverage configuration and providing a second coverage configuration. Providing the first coverage configuration may include transmitting a first beam of a first network that may be configured to provide coverage for the group of devices. Providing the second coverage configuration may include transmitting a second beam of the first network that may be narrower than the first beam and configured to provide coverage to at least one continuous use device of the group of devices, and providing coverage by a second network to a plurality of interval use devices of the group of devices.

[0006] The present disclosure also describes example devices. Some example devices may include an adaptive antenna, a processor and a machine readable medium having stored therein instructions that, when executed by the processor, cause the device to provide network coverage by cycling over time through a coverage sequence that includes providing a first coverage configuration and providing a second coverage configuration. Providing the first coverage configuration may include transmitting a first beam of a first network that may be configured to provide coverage for the

IPR2024-00135
Petitioners' Ex. 1002
Ex.1002.00092

group of devices. Providing the second coverage configuration may include transmitting a second beam of the first network that may be narrower than the first beam and configured to provide coverage to at least one continuous use device of the group of devices, and providing coverage by a second network to a plurality of interval use devices of the group of devices.

[0007] The foregoing summary may be illustrative only and may not be intended to be in any way limiting. In addition to the illustrative aspects, embodiments, and features described above, further aspects, embodiments, and features will become apparent by reference to the drawings and the following detailed description.

IPR2024-00135
Petitioners' Ex. 1002
Ex.1002.00093

BRIEF DESCRIPTION OF THE DRAWINGS

[0008] Subject matter is particularly pointed out and distinctly claimed in the concluding portion of the specification. The foregoing and other features of the present disclosure will become more fully apparent from the following description and appended claims, taken in conjunction with the accompanying drawings. Understanding that these drawings depict only several embodiments in accordance with the disclosure and are, therefore, not to be considered limiting of its scope, the disclosure will be described with additional specificity and detail through use of the accompanying drawings.

[0009] In the drawings:

Fig. 1A is an illustration of a block diagram of an example network configuration;

Fig. 1B is an illustration of a block diagram of an example network configuration;

Fig. 2 is an illustration of a flow chart of an example method for providing network coverage for a group of devices;

Fig. 3 is an illustration of a flow chart of an example method for a device to receive data updates;

Fig. 4A is an illustration of a block diagram of an example network configuration;

Fig. 4B is an illustration of a block diagram of an example network configuration;

IPR2024-00135
Petitioners' Ex. 1002
Ex.1002.00094

Fig. 4C is an illustration of a block diagram of an example network configuration;

Fig. 5 is an illustration of a flow chart of an example method for providing network coverage for a group of devices;

Fig. 6 is an illustration of an example computer program product; and

Fig. 7 is an illustration of a block diagram of an example computing device, all arranged in accordance with at least some embodiments of the present disclosure.

IPR2024-00135
Petitioners' Ex. 1002
Ex.1002.00095

DETAILED DESCRIPTION

[0010] Subject matter is particularly pointed out and distinctly claimed in the concluding portion of the specification. The foregoing and other features of the present disclosure will become more fully apparent from the following description and appended claims, taken in conjunction with the accompanying drawings. Understanding that these drawings depict only several embodiments in accordance with the disclosure and are, therefore, not to be considered limiting of its scope, the disclosure will be described with additional specificity and detail through use of the accompanying drawings.

[0011] The following description sets forth various examples along with specific details to provide a thorough understanding of claimed subject matter. It will be understood by those skilled in the art, however, that claimed subject matter may be practiced without some or more of the specific details disclosed herein. Further, in some circumstances, well-known methods, procedures, systems, components and/or circuits have not been described in detail in order to avoid unnecessarily obscuring claimed subject matter.

[0012] In the following detailed description, reference is made to the accompanying drawings, which form a part hereof. In the drawings, similar symbols typically identify similar components, unless context dictates otherwise. The illustrative embodiments described in the detailed description, drawings, and claims are not meant to be limiting. Other embodiments may be utilized, and other changes may be made, without departing from the spirit or scope of the subject matter presented here. It will be readily understood that the aspects of the present disclosure, as generally described herein, and

IPR2024-00135
Petitioners' Ex. 1002
Ex.1002.00096

illustrated in the Figures, can be arranged, substituted, combined, and designed in a wide variety of different configurations, all of which are explicitly contemplated and make part of this disclosure.

[0013] This disclosure is drawn, *inter alia*, to methods, devices, systems and computer readable media related to providing network coverage for a group of devices in an area.

[0014] In some embodiments, network coverage may be provided by cycling over time through a coverage sequence. In various examples, the coverage sequence may include two or more coverage configurations. For example, a first coverage configuration may include a beam that may be relatively wide such that it may provide coverage for all the devices in an area or sector. The beam may thereby provide coverage by a first type of network to all the devices. The second coverage configuration may include a beam that may be relatively narrow such that it may provide coverage by the first network type for one or more continuous use devices in the area. A continuous use device may include a device that may be actively involved in a substantially continuous service with the network. The substantially continuous service may generally include any type of substantially continuous service including, for example, a voice call, a download, a content streaming, or the like. The second coverage configuration may also include coverage by a second type of network to interval use devices in the area, which may include the devices that may be non-continuous use devices. In general, the first type of network may be a more capable network than the second type of network. As mentioned, the network coverage may be provided by cycling over time through the coverage sequence and, in the discussed example,

IPR2024-00135
Petitioners' Ex. 1002
Ex.1002.00097

cycling over time through the coverage sequence may include alternating between the first and second coverage configurations.

[0015] Such an embodiment may have several advantages. For example, for the continuous use device or devices, the narrower beam may provide greater signal power to the device during the second coverage configuration since a narrow beam has substantially more power than a wide beam. By providing more power in the carrier signal to a continuous use device, the device may have increased bandwidth and may operate with significantly less power since the device's receiver amplifier power may be backed down to a lower level. Also, since the focus may be substantially symmetrical, the device may further operate with less power as the device transmitter may be backed down to a lower level. For the interval use devices, network coverage may be provided at all times (as is needed in case the device may need to become a continuous use device at receiving or making a call or initiating a download or the like). Further, some or all of the interval use devices may have applications that require intermittent updating such as, for example, social networking applications, email, Really Simple Syndication (RSS) feeds, map updates, game update, sports score update, or the like. As discussed, during the second coverage configuration, the interval use devices may be on a less capable network. At the interval use devices, requests by applications requiring intermittent updates may be postponed and/or batched and not sent during coverage by the less capable network. Then, during the first coverage configuration when covered by the more capable network, the interval use devices requiring intermittent updates may request and/or receive data downloads related to those applications.

IPR2024-00135
Petitioners' Ex. 1002
Ex.1002.00098

[0016] Therefore, the examples discussed herein may provide narrow beam coverage by a more capable network to continuous use devices and coverage by a less capable network to interval use devices during a coverage configuration. After a time in such a configuration, the coverage may alternate to another coverage configuration that provides coverage for continuous use and interval use devices by a wide beam of the more capable network. The continuous use devices may remain on the more capable network, alternating between relatively higher power coverage by a narrow beam and relatively lower power coverage by a wide beam. The interval use devices may alternate between coverage by the less capable network (which may provide some useful services such as text messaging, for example, and which may detect a service initiation that makes the device a continuous use device) and coverage by a wide beam of the more capable network (which may provide opportunity for updates and data download for intermittent applications).

[0017] Figs. 1A and 1B are illustrations of block diagrams of an example network coverage 100 and an example network coverage 150, respectively, arranged in accordance with at least some embodiments of the present disclosure. As shown in Fig. 1A, network coverage 100 may include a beam shape 130 transmitted by an antenna 120 that may be mounted on a tower 125. Beam shape 130 may provide network coverage for continuous use device 101 and interval use devices 102, 103, 104, 105, 106. In some examples, beam shape 130 may provide wide beam coverage of a first network type to all the devices in an area.

IPR2024-00135
Petitioners' Ex. 1002
Ex.1002.00099

[0018] As shown in Fig. 1B, network coverage 150 may include a beam shape 160 provided by antenna 120 that may provide network coverage for continuous use device 101, and a network coverage 170 may be provided to interval use devices 102, 103, 104, 105, 106. In some examples, beam shape 160 may provide narrow beam coverage of the first network type to continuous use device 101 and network coverage 170 may be of a second network type and may be provided to interval use devices 102, 103, 104, 105, 106. In some examples, network coverage 170 may be provided by an overlapping network that may overlap the network coverage that may be provided by beam shape 160. In general, interval use devices may include all the devices in the area that are not continuous use devices. In some examples, interval use devices may have applications that require intermittent updates. In some examples, interval use devices may not include such applications. In some examples, beam shape 160 may provide no coverage to interval use devices 102, 103, 104, 105, 106.

[0019] In general, antenna 120 may include any suitable antenna that may provide beam shape 130 and beam shape 160. In some examples, antenna 120 may include an adaptive antenna having active beamforming capability. In general, beamforming may include directional signal transmission. In some examples, antenna 120 may be controlled by a controlling device such as a controller, a computer, a device discussed below with respect to Fig. 7, or the like, that may provide adaptive beam shape parameters to antenna 120 that may define the formed beam shape. In some examples, the control for providing the beam shape parameters may be provided in software at the controlling device, in firmware at the controlling

IPR2024-00135
Petitioners' Ex. 1002
Ex.1002.00100

device, or in hardware at the controlling device. In some examples, the control may be provided in beam management software at the controlling device.

[0020] In some examples, the first network type may be a more capable network than the second network type, as is further discussed below. In various examples, network coverage 170 may be provided by antenna 120, a different antenna at tower 125, or a different antenna mounted at a different tower. In some examples, network coverage 170 may provide coverage for only interval use devices. In some examples, network coverage 170 may provide coverage for all devices including continuous use devices and interval use devices.

[0021] As shown, in an area one or more devices may be continuous use devices and one or more devices may be interval use devices. In general, a continuous use device may include a device that may be engaged in a substantially continuous service such as, for example, a voice call, a download, a content streaming, or the like. An interval use device may include a device that may not be currently engaged in a substantially continuous service. As will be appreciated, the interval use devices may still require network coverage since they may make or receive calls, begin a continuous service, make or receive text messages, or the like. As shown, in some examples, only one continuous use device may be in an area. In general, there may be any number of continuous use devices and the devices may change state between continuous use and interval use based on user action or the device receiving an initiation of a continuous service.

IPR2024-00135
Petitioners' Ex. 1002
Ex.1002.00101

[0022] As is discussed herein, network coverage may be provided for devices in an area by cycling over time through a coverage sequence that includes network coverage 100 and network coverage 150. Such a cycling method may provide numerous advantages over a substantially static coverage method. In some examples, devices may vary the receiver amplifier power based on the power of a received signal such that the power may be backed off until the signal may be barely receivable by the device. Such methods may allow for the device to use a relatively low amount of power to receive the signal. As will be appreciated, a wide signal sent by antenna 120 will have less power than a narrow signal. In some examples, the power of the transmitted signal may be inversely proportional to the angle (width) of the signal. For example, a signal sent over 2 degrees may be 6 times more powerful than a signal sent over 12 degrees.

[0023] For continuous use device 101, cycling between network coverage 100 and network coverage 150 may offer the advantages of high bandwidth, lower power usage and/or increased battery life. In some examples, during network coverage 150, continuous use device 101 may receive a higher bandwidth or more reliable signal when covered by beam shape 160. In some examples, during network coverage 150, the power of beam shape 160 may allow continuous use device 110 to use substantially less power in receiving the signal from antenna 120. In some examples, network coverage 150 may be maintained for a longer duration than network coverage 100 such that the advantage for continuous use device 101 may be substantial. For example, if the power demand to send and receive during beam shape 160 may be *A*, the power demand to send and receive during

IPR2024-00135
Petitioners' Ex. 1002
Ex.1002.00102

beam shape 130 may be *B*, and the proportion of time spent in beam shape 160 may be *p*, the power demand D at device 101, may be:

$$D = pA + (1 - p)B \tag{1}$$

Equation (1) may trend to *A* as *p* increases. In an example, a cycle may take 5 minutes and may be in beam shape 160 for 292 seconds and in beam shape 130 for 8 seconds such that *p* may be 97.3%, and *A* may be 20% of *B*. In such an example, the power demanded by a device using the cyclic method described between beam shapes 130, 160 may reduce the overall power by a factor of 4.86 as compared to a device covered continually by beam shape 130. Such savings in power usage may substantially extend the battery life of devices.

[0024] In some examples, the direction of transmission beam shape 160 may be based on the location of continuous use device 101. In general, a device may be characterized as a continuous use device using any suitable technique or techniques. In some examples, a device may be characterized as continuous use by characterizing traffic coming through a base station that may service antenna 120. In some examples, the traffic for each device in an area may be compared to determine which devices (if any) may be continuous use devices. In some examples, the largest and most persistent traffic may characterize a continuous use device. In some examples, the device may provide an indication characterizing the device such as a continuous use indication, an interval use indication, or the like. The location of continuous use device 101 may be determined using any suitable technique such as, for example, global positioning methods, triangulation

IPR2024-00135
Petitioners' Ex. 1002
Ex.1002.00103

methods, device tracking methods, or the like. As discussed herein, in some examples, more than one device may be in continuous use. In some examples, beam shape 160 may be provided such that it may encompass all the continuous use devices. In some examples, beam shape 160 may include multiple directed narrow beams that either service single continuous use devices or groups of continuous use devices.

[0025] For interval use devices 102, 103, 104, 105, 106, cycling between network coverage 100 and network coverage 150 may not negatively impact service. In general, interval use devices may require a variety of services that may be postponed and/or batched such that the service may be performed when the device may be covered by the more capable network and the service may be postponed while the device may be covered by the less capable network. For example, an interval use device may not receive data updates to intermittent applications during network coverage 150. During network coverage 150, the interval use device may identify that it may be covered by a less capable network and it may not make requests for data for interval services.

[0026] In general, any service that may not require continuous service to the device may be classified and managed as an interval use device. In some examples, the interval services may include social networking applications, email, Really Simple Syndication (RSS) feeds, map updates, game update, sports score update, or the like. In such examples, the interval use device may be able to wait for data updates, feeds, or the like. During network coverage 100, the interval use devices may be covered by a more capable network and may request and download the data that had been

postponed and/or batched during network coverage 150. As discussed herein, in some examples, network coverage 100 may be maintained for a shorter duration than network coverage 150 such that a continuous use device or devices may have the advantage of using substantially less power. In such examples, short durations of network coverage 100 may provide the opportunity for interval use devices to receive substantially all or most of their requested downloads since those requests may be relatively small or minor for the more capable network.

[0027] As shown in Figs. 1A and 1B, in some examples, beam shape 160 may be narrower than beam shape 130. In some examples, beam shape 160 may be narrower than beam shape 130 in a substantially horizontal orientation. In some examples, beam shape 160 may be narrower than beam shape 130 in a substantially vertical orientation. In some examples, beam shape 160 may be narrower than beam shape 130 in both a substantially horizontal orientation and a substantially vertical orientation. As discussed herein, a narrower beam may provide more power in proportion to the inverse of the width of the beam. For a beam that may be narrower in two directions (horizontal and vertical, for example) a narrower beam may provide more power in proportion to the inverse of the width of the beam in the horizontal direction and in proportion to the inverse of the width of the beam in the vertical direction. In general, the width (or angle) of beam shape 130 may include any suitable width. In some examples, the width of beam shape 130 may be in the range of about 90 degrees to 180 degrees. In some examples, the width of beam shape 130 may be in the range of about 30 degrees to 90

IPR2024-00135
Petitioners' Ex. 1002
Ex.1002.00105

degrees. In some examples, the width of beam shape 130 may be in the range of about 10 degrees to 30 degrees.

[0028] In general, the width (or angle) of beam shape 160 may be any suitable width such that it may be narrower than beam shape 130. In some examples, the width of beam shape 160 may be in the range of about 1 degree to 3 degrees. In some examples, the width of beam shape 160 may be in the range of about 3 degree to 10 degrees. In some examples, the width of beam shape 160 may be in the range of about 10 degree to 20 degrees. As discussed herein, in various examples, the number of continuous use devices may vary and the width of beam shape 160 may vary to cover a single continuous use device or multiple continuous use devices. In such examples, the width of beam shape 160 may be based in part on the locations of the continuous use devices such that a narrower shape may be used when they may be closely clustered while a wider shape may be used when they may be more disparately clustered. Also as discussed herein, in some examples, multiple continuous use devices may be covered by multiple narrow beam shapes. In such examples, the multiple beams may each cover one or more continuous use devices and, similarly, the width of the narrow beam shape may depend on the number and/or clustering of the continuous use device or devices.

[0029] In some examples, multiple areas or sectors may be serviced by tower 125 and/or antenna 120. For example, the 360 degrees around antenna 120 may be divided into areas or sectors such as, for example, 10 to 30 sectors. In such examples, each area or sector may be covered by a beam shape analogous to beam shape 130 during one coverage

configuration and the area or sector may be covered by a configuration including a narrow beam servicing continuous use devices and coverage by a less capable network for interval use devices. In general, each area or sector may employ the cyclic beam adaptation methods discussed herein. In some examples, the beam cycles for each sector may have substantially matching phases. In some examples, the beam cycles for each sector may be out of phase. In such sector based examples, a variety of adaptive configurations for covering the areas may be provided including narrow beams covering for different areas of sectors when those areas have a large number or disparate clustering of continuous use devices, or the like.

[0030] Fig. 2 is an illustration of a flow chart of an example method 200 for providing network coverage for a group of devices in an area, arranged in accordance with at least some embodiments of the present disclosure. Method 200, and other methods and techniques described herein set forth various functional blocks or actions that may be described as processing steps, functional operations, events and/or acts, etc., which may be performed by hardware, software, and/or firmware. Numerous alternatives to the functional blocks shown in Fig. 2 may be practiced in various implementations. For example, intervening actions not shown in Fig. 2 and/or additional actions not shown in Fig. 2 may be employed and/or some of the actions shown in Fig. 2 may be eliminated, without departing from the scope of claimed subject matter. Method 200 may include one or more of functional operations as indicated by one or more of blocks 210 and/or 220.

[0031] As shown in Fig. 2, the process of method 200 may cycle over time through a coverage sequence that includes providing a first coverage

configuration and providing a second coverage configuration. At block 210, ”Provide a First Coverage Configuration by Transmitting a Wide Beam of a More Capable Network to Provide Coverage for a Group of Devices”, a first coverage configuration as described may be provided. The process may continue at block 220. At block 220, “Provide a Second Coverage by Transmitting a Narrow Beam of the More Capable Network to Provide Coverage for Continuous Use Devices and Providing Coverage by a Less Capable Network to Interval Use Devices”, a second coverage configuration as described may be provided. As shown, the coverage sequence may continue at block 210 and may continue to cycle over time between the first and second coverage configurations.

[0032] In some examples, the first coverage configuration may be network coverage 100 as shown in Fig. 1A and the second coverage configuration may be network coverage 150 as shown in Fig. 1B. As discussed, a coverage configuration having a wide beam of a more capable network type and a coverage configuration having a narrow beam servicing a continuous device or devices and a less capable network covering interval use devices may be cycled through over time. In general, the coverage configurations each may be maintained for any suitable durations of time. In some examples, a first configuration having the wide beam of the more capable network configuration may be provided for a duration that may be shorter than the duration of a second configuration having a narrow beam servicing a continuous device or devices and a less capable network covering interval use devices.

IPR2024-00135
Petitioners' Ex. 1002
Ex.1002.00108

[0033] In general, the first configuration and the second configuration may be provided for any suitable durations. In some examples, the first configuration may be provided for a duration in the range of about 2 to 10 seconds. In some examples, the first configuration may be provided for a duration in the range of about 1 to 5 seconds. In some examples, the first configuration may be provided for a duration in the range of about 7 to 15 seconds. In some examples, the second configuration may be provided for a duration in the range of about 2 to 5 minutes. In some examples, the second configuration may be provided for a duration in the range of about 1 to 3 minutes. In some examples, the second configuration may be provided for a duration in the range of about 4 to 8 minutes.

[0034] In some examples, the configurations may be cycled over time using the same durations such that the durations remain substantially constant. In some examples, the configurations may be cycled using durations that vary over time. The cycle durations may be varied based on factors such as, for example, the number of devices in the area, the number of continuous use devices, the number of interval use devices, the ratio of continuous use devices to interval use devices, the type of devices, the type or amount of data requested by the interval devices, or the like.

[0035] As discussed, in some examples, a more capable and a less capable network may be provided. In general, a more capable network may provide greater uplink and/or downlink rates, may be more stable, may be of a more advanced standard, or the like. In general, any combination of network types may be provided. In some examples, the more capable network may be a Worldwide Interoperability for Microwave Access (WiMAX) network. In

IPR2024-00135
Petitioners' Ex. 1002
Ex.1002.00109

some examples, the more capable network may be a Third Generation Mobile (3G) network and the less capable network may be an Enhanced Data Rates for Global Evolution (EDGE) network. In some examples, the more capable network may be a Fourth Generation Mobile (4G) network and the less capable network may be an Enhanced Data Rates for Global Evolution (EDGE) network. In some examples, the more capable network may be a Long Term Evolution (LTE) network and the less capable network may be an Enhanced Data Rates for Global Evolution (EDGE) network. In some examples, the less capable network may be a Third Generation Mobile (3G) network. In some examples, the less capable network may be a Third Generation Mobile (3G) network and the more capable network may be a Worldwide Interoperability for Microwave Access (WiMAX) network. In some examples, the less capable network may be a Third Generation Mobile (3G) network and the more capable network may be a Fourth Generation Mobile (4G) network. In some examples, the more capable network may be an Evolution-Data Optimized (EV-DO) network and the less capable network may be a Code Division Multiple Access (CDMA) network. In some examples, the more capable network may be a data network and the less capable network may be a voice network. In some examples, the more capable network may be a data network and the less capable network may be a mixed voice and data network. In some examples, the networks may be of the same type. In such examples, the continuous use device or devices may be allowed access to the more capable network based on an admission control parameter such that admission may be provided only to continuous use devices.

IPR2024-00135
Petitioners' Ex. 1002
Ex.1002.00110

[0036] As discussed, as method 200 continues, various devices may change state from continuous use to interval use or from interval use to continuous use. In some examples, a subsequent iteration of providing the coverage configuration of block 220 may include transmitting the narrow beam of the more capable network to provide coverage to a continuous use device that may have previously been an interval use device. In some examples, no devices may currently be continuous use devices. In such examples, the method may maintain the network coverage of block 210 such that all devices may be covered by the more capable network. In such examples, the devices may receive more frequent updates to the intermittent data applications and data requests may not be postponed and/or batched. In general, such configuration adaptations may be implemented by any suitable controller or computing device as discussed herein.

[0037] The beam shapes discussed herein may be provided by any suitable antenna, antenna array, adaptive antenna, or the like. The antenna or antennas may be controlled using any suitable techniques. As discussed herein, in some examples, multiple networks may be provided during various coverage configurations. The multiple networks may be provided using any suitable antenna and/or tower configuration. The networks may be controlled using any suitable techniques. In some examples, the less capable network may be a substantially static network that may not require control techniques (beyond those already implemented by the network) to be used in the various configurations discussed herein.

[0038] Fig. 3 is an illustration of a flow chart of an example method 300 for an interval use device to receive data updates, arranged in accordance

IPR2024-00135
Petitioners' Ex. 1002
Ex.1002.00111

with at least some embodiments of the present disclosure. Method 300 may be performed by hardware, software, and/or firmware of any suitable device discussed herein. In some examples, intervening actions not shown in Fig.3 and/or additional actions not shown in Fig. 3 may be employed, without departing from the scope of claimed subject matter. Method 300 may include one or more of functional operations as indicated by one or more of blocks 310, 320, 330. Method 300 may be performed in any of the network coverage sequences discussed herein such as those discussed with respect to Figs. 1A, 1B and 2 or those discussed with respect to Figs. 4A, 4B, 4C and 5. The process of method 300 may begin at block 310.

[0039] At block 310, "Deferring Data Updates During Coverage by a Less Capable Network", an interval use device may defer data updates for intermittent use applications while covered by a less capable network. As discussed, in some examples, an intermittent use application may include any application that does not require continuous service or immediate access to data such as, for example, social networking applications, email, Really Simple Syndication (RSS) feeds, map updates, game update, sports score update, or the like. The interval use device may be any suitable device, such as, for example, a mobile phone, a smartphone, a laptop computer, a netbook device, a tablet device, a personal digital assistant, a machine-to-machine (M2M) data system, or the like.

[0040] In some examples, during coverage by a less capable network, an intermittent use application or the operating system of an interval use device may not allow update requests when the device may be covered by a less capable network. In such examples, the device may identify the type of

network it may be covered by and the device may set a no updates flag or the like when coverage by a network below a threshold quality may be determined. The less capable network may be any suitable type including any of those discussed herein. In some examples, during the coverage by a less capable network, an interval use device may be in a sleep mode. In such examples, the device may set a flag such that no updates may be made while the device may be in a sleep mode or until a command may be made by a user input. Upon being awoken by the user, for example, the device may determine the type of network it may be covered by and determine whether an update request may be made as discussed above.

[0041] In some examples, the operating system of an interval use device may gather update request from a number of intermittent use applications and batch them as one or more update requests. In some examples, an intermittent use application or the operating system of an interval use device may allow data update requests only when the device may be in an awake state. In some examples, deferring and/or batching data update requests may be in line with best practices of intermittent application developers such that an implementation of the methods discussed herein may not negatively impact the functionality of applications for device users. The process of method 300 may continue at block 320.

[0042] At block 320, "Transmitting an Update Request During Coverage by a More Capable Network", the interval use device may detect coverage by a more capable network and may transmit an update request. In general, the update request may be any suitable transmission that communicates an update request across the network and to a server, for

example. In some examples, the update request may include an update request for a single application. In some examples, the update request may include a batched request that may include update requests for multiple applications. The process of method 300 may continue at block 330.

[0043] At block 330, "Receiving a Data Update During Coverage by the More Capable Network", the interval use device may receive a data update over the network in response to the transmitted data update request. In general, the data update may be received using any suitable technique or techniques. In some examples, the data update may be for a single application. In some examples, the data update may be for multiple applications. In some examples, more than one data request may be received at the interval use device. Although not shown in Fig. 3 for the sake of clarity, while covered by the more capable network, the interval use device may send one or more additional data update requests subsequent to receiving the data update at block 330. As shown, the process of method 300 may continue at block 310 and may cycle through blocks 310, 320, 330 as the network configurations may be cycled as discussed herein.

[0044] In some examples, the effect of cycling over time through the discussed coverage configurations may have the effect of pushing interval use devices including smart devices into synchronized updating patterns such that they defer updates during coverage by a less capable network and request update when covered by a wide beam of a more capable network.

[0045] Figs. 4A, 4B and 4C are illustrations of block diagrams of an example network coverage 410, an example network coverage 420 and an example network coverage 430, respectively. As shown in Fig. 4A, network

coverage 410 may include a beam shape 440 transmitted by antenna 120 mounted on tower 125 that may provide network coverage for continuous use devices 101 and interval use devices 102, 103, 104, and a network coverage 490 that may be provided to interval use devices 105, 106. In some examples, beam shape 440 may provide relatively wide beam coverage of a first network type to a group of devices in an area and network coverage 490 may be of a second network type. In some examples, continuous use device 101 and interval use devices 102, 103, 104 may be a first group or population of all the devices in an area. In some examples, the first network type may be of a more capable network and the second network may be of a less capable network type as discussed herein.

[0046] As shown in Fig. 4B, network coverage 420 may include a beam shape 450 provided by antenna 120 that may provide network coverage for continuous use device 101 and interval use devices 105, 106, and network coverage 490 that may be provided to interval use devices 102, 103, 104. In some examples, beam shape 450 may provide relatively wide beam coverage of the first network type a group of devices in an area. In some examples, devices 105, 106 may be a second group or population of all the devices in an area. As shown in Figs. 4A and 4B, in some examples, beam shape 440 may provide network coverage to a first group of devices in an area and beam shape 450 may provide network coverage to a second group of devices in the area such that the first group and the second group make up all the devices in the area. In some examples, a continuous use device or devices may be included in both beam shapes such that the continuous use device or devices may be continually covered by the first network type. As illustrated, in some

IPR2024-00135
Petitioners' Ex. 1002
Ex.1002.00115

examples, beam shape 440 and beam shape 450 may be substantially the same width (or angle). In other examples, beam shape 440 and beam shape 450 may be different.

[0047] As shown in Fig. 4C, network coverage 430 may include a beam shape 460 provided by antenna 120 that may provide network coverage for continuous use device 101, and network coverage 490 that may be provided to interval use devices 102, 103, 104, 105, 106. In some examples, beam shape 460 may provide narrow beam coverage of the first network type to continuous use device 101 and network coverage 490 may provide coverage of a second network type to interval use devices102, 103, 104, 105, 106. In some examples, network coverage 490 may be provided by an overlapping network that may overlap the network coverage that may be provided by beam shapes 440, 450, 460. In general, the continuous use devices and interval use devices may include any of the devices, applications, or characteristics as discussed herein. As discussed, the network type of beam shapes 440, 450, 460 may be of a more capable network and network coverage 490 may be of a less capable network type as discussed herein. The more capable network and the less capable network may be of any suitable network types, including any of those discussed herein.

[0048] In various examples, antenna 120, tower 125 and any controlling device coupled to antenna may include any of the characteristics and types as those discussed herein. As discussed herein, in some examples, multiple areas or sectors may be covered by tower 120 and/or antenna. In such examples, one or more of the sectors may be covered by network coverage configurations like network coverages 410, 420, 430. Also,

beam shapes 440, 450, 460 may include any of those discussed herein and, in particular, with respect to Figs. 1A and 1B above. In general, the width of the beam shapes 440, 450 may include any suitable widths. In some examples, the width of beam shapes 440, 450 may be in the range of about 45 degrees to 90 degrees. In some examples, the width of beam shapes 440, 450 may be in the range of about 15 degrees to 45 degrees. In some examples, the width of beam shapes 440, 450 may be in the range of about 5 degrees to 15 degrees. As discussed, in some examples, beam shapes 440, 450 may be the same width while in other examples they may be different. In some examples, beam shapes 440, 450 may be structured such that each covers the continuous use devices in the area.

[0049] In general, beam shape 460 may be any suitable width such that it may be narrower than one of beam shape 440 or beam shape 450. In some examples, the width of beam shape 460 may be in the range of about 1 degree to 3 degrees. In some examples, the width of beam shape 460 may be in the range of about 3 degree to 10 degrees. In some examples, the width of beam shape 460 may be in the range of about 10 degree to 20 degrees. As discussed herein, in various examples, the number of continuous use devices may vary and the width of beam shape 460 may vary to cover a single continuous use device or multiple continuous use devices. In such examples, the width of beam shape 460 may be based in part on the locations of the continuous use devices such that a narrower shape may be used when they may be closely clustered while a wider shape may be used when they may be more disparately clustered. Also as discussed herein, in some examples, multiple continuous use devices may be covered by multiple

narrow beam shapes. In such examples, the multiple beams may each cover one or more continuous use devices and, similarly, the width of the narrow beam shape may depend on the number and/or clustering of the continuous use device or devices.

[0050] Fig. 5 is an illustration of a flow chart of an example method 500 for providing network coverage for a group of devices in an area, arranged in accordance with at least some embodiments of the present disclosure. Method 500 sets forth various functional blocks or actions that may be described as processing steps, functional operations, events and/or acts, etc., which may be performed by hardware, software, and/or firmware. In some examples, intervening actions not shown in Fig. 5 may be employed without departing from the scope of claimed subject matter. Method 500 may include one or more of functional operations as indicated by one or more of blocks 510, 520 and/or 530. As shown in Fig. 5, the process of method 500 may cycle over time through a coverage sequence that includes providing a first, second and third coverage configurations. The process of method 500 may begin at block 510.

[0051] At block 510, "Provide a First Coverage Configuration by Transmitting a Wide Beam of a More Capable Network to Provide Coverage for a First Group of Devices and Providing Coverage by a Less Capable Network to Interval Use Devices", a first configuration as described may be provided. In some examples, the first configuration may be network coverage 410 as illustrated in Fig. 4A. The process of method 500 may continue at block 520.

[0052] At block 520, "Provide a Second Coverage Configuration by Transmitting a Wide Beam of a More Capable Network to Provide Coverage for a Second Group of Devices and Providing Coverage by a Less Capable Network to Interval Use Devices", a second configuration as described may be provided. In some examples, the second configuration may be network coverage 420 as illustrated in Fig. 4B. The process of method 500 may continue at block 530.

[0053] At block 530, "Provide a Third Coverage by Transmitting a Narrow Beam of the More Capable Network to Provide Coverage for Continuous Use Devices and Providing Coverage by a Less Capable Network to Interval Use Devices", a third configuration as described may be provided. In some examples, the third configuration may be network coverage 430 as illustrated in Fig. 4C. As illustrated in Fig. 5, the process of method 500 may continue by cycling back to block 510, and the process may continue to cycle through blocks 510, 520 and 530 through time.

[0054] As discussed, network coverages 410, 420, 430 may be cycled through over time. In general, the coverage configurations each may be maintained for any suitable durations of time. In some examples, network coverage 410 and network coverage 420 may be provided for a duration that may be shorter than the duration of network coverage 430. In some examples, network coverages 410, 420 may be provided for a duration in the range of about 2 to 10 seconds. In some examples, network coverages 410, 420 may be provided for a duration in the range of about 1 to 5 seconds. In some examples, network coverages 410, 420 may be provided for a duration in the range of about 7 to 15 seconds. In some examples, network coverage

430 may be provided for a duration in the range of about 2 to 5 minutes. In some examples, network coverage 430 may be provided for a duration in the range of about 1 to 3 minutes. In some examples, network coverage 430 may be provided for a duration in the range of about 4 to 8 minutes.

[0055] In some examples, the configurations may be cycled over time using the same durations such that the durations remain substantially constant. In some examples, the configurations may be cycled using durations that vary over time. The cycle durations may be varied based on factors such as, for example, the number of devices in the area, the number of continuous use devices, the number of interval use devices, the ratio of continuous use devices to interval use devices, or the like.

[0056] As discussed, in some examples, network coverages 410, 420, 430 may be cycled through over time. In some examples, network coverages 410, 420 may be cycled through over time (without use of network coverage 430). Such examples may provide for the power savings discussed herein and may provide simplicity of implementation. Such examples may provide beam shape 440 and beam shape 450 having overlapping coverage areas for continuous use users, such as, for example, continuous use user 101. Such examples may include cycling over time through a coverage sequence that may include a first coverage configuration and a second coverage configuration. Providing the first coverage configuration may include transmitting a beam of a more capable network to provide coverage to a first group of devices and providing coverage of a less capable network to interval use devices. Providing the second coverage configuration may include transmitting a beam of a more capable network to provide coverage to a

second group of devices and providing coverage of a less capable network to interval use devices. In some examples, the beam provided to the first group of devices may include beam shape 440, the beam provided to the second group of devices may include beam shape 450 and the coverage of the less capable network may include network coverage 490, as illustrated in Figs. 4A and 4B.

[0057] As discussed in method 500, three or more coverage configurations may be employed such that one of the coverage configurations includes a narrow beam shape that may provide coverage to one or more continuous use devices. In general, any number of coverage configurations may be used in analogy to the illustrated configurations such that the following may be cycled through over time: any number of phases of coverage by a relatively wide beam of a more capable network type to subsets of all the devices and coverage by a less capable network to the remaining (or out of phase) devices, and a coverage configuration that may include a relatively narrow beam shape of the more capable network that may cover a continuous use device or devices and coverage by the less capable network to the remaining interval use devices. In some examples, the number of coverage configurations may be the same over time. In some examples, the number of coverage configurations may change over time. In some examples, some cycles may include the coverage configurations of Figs. 1A and 1B and other cycles may include the coverage configurations of Figs. 4A, 4B and 4C. A determination of which coverage configuration may be used during each cycle may be based on the number of devices in the area, the number of

IPR2024-00135
Petitioners' Ex. 1002
Ex.1002.00121

continuous use devices, the locations of the continuous use devices, or the like.

[0058] Fig. 6 illustrates an example computer program product 600, arranged in accordance with at least some embodiments of the present disclosure. Computer program product 600 may include machine readable non-transitory medium having stored therein a plurality of instructions that, when executed, cause the machine to provide device power management according to the processes and methods discussed herein. Computer program product 600 may include a signal bearing medium 602. Signal bearing medium 602 may include one or more machine-readable instructions 604, which, when executed by one or more processors, may operatively enable a computing device to provide the functionality described herein with respect to Fig. 2, Fig. 3, and/or Fig. 5 or any of the functionality discussed herein. In some examples, referring to the method of Fig. 2 and Fig. 5, a device controlling antenna 120 may undertake one or more of the operations shown in Fig. 2, and/or Fig. 5 in response to instructions 404 conveyed by medium 402. In some examples,, referring to the method of Fig. 3, an interval use device such as any of those devices discussed herein may undertake one or more of the operations shown in Fig. 3 in response to instructions 404 conveyed by medium 402.

[0059] In some implementations, signal bearing medium 602 may encompass a computer-readable medium 605, such as, but not limited to, a hard disk drive, a Compact Disc (CD), a Digital Versatile Disk (DVD), a digital tape, memory, etc. In some implementations, signal bearing medium 602 may encompass a recordable medium 608, such as, but not limited to,

IPR2024-00135
Petitioners' Ex. 1002
Ex.1002.00122

memory, read/write (R/W) CDs, R/W DVDs, etc. In some implementations, signal bearing medium 602 may encompass a communications medium 610, such as, but not limited to, a digital and/or an analog communication medium (e.g., a fiber optic cable, a waveguide, a wired communication link, a wireless communication link, etc.). In some examples, signal bearing medium 602 may encompass a machine readable non-transitory medium.

[0060] Fig. 7 is a block diagram illustrating an example computing device 700, arranged in accordance with at least some embodiments of the present disclosure. In various examples, computing device 700 may be configured to provide the network coverage operations or the device updating options discussed herein. In some examples, computing device 700 may be configured as a interval use device as discussed herein and may provide the functions and operations discussed with respect to Fig. 3. In some examples, computing device 700 may be configured as an antenna controller as discussed herein and may provide the functions and operations discussed with respect to Fig. 2 and/or Fig. 5. In one example basic configuration 701, computing device 700 may include one or more processors 710 and system memory 720. A memory bus 730 can be used for communicating between the processor 710 and the system memory 720.

[0061] Depending on the desired configuration, processor 710 may be of any type including but not limited to a microprocessor (μP), a microcontroller (μC), a digital signal processor (DSP), or any combination thereof. Processor 710 can include one or more levels of caching, such as a level one cache 711 and a level two cache 712, a processor core 713, and registers 714. The processor core 713 can include an arithmetic logic unit

IPR2024-00135
Petitioners' Ex. 1002
Ex.1002.00123

(ALU), a floating point unit (FPU), a digital signal processing core (DSP Core), or any combination thereof. A memory controller 715 can also be used with the processor 710, or in some implementations the memory controller 715 can be an internal part of the processor 710.

[0062] Depending on the desired configuration, the system memory 720 may be of any type including but not limited to volatile memory (such as RAM), non-volatile memory (such as ROM, flash memory, etc.) or any combination thereof. System memory 720 may include an operating system 721, one or more applications 722, and program data 724. Application 722 may include cyclic coverage or cyclic update application 723 that can be arranged to perform the functions, actions, and/or operations as described herein including the functional blocks, actions, and/or operations described herein. Program Data 724 may include cyclic coverage or cyclic update data 725 for use with application 723. In some example embodiments, application 722 may be arranged to operate with program data 724 on an operating system 721. This described basic configuration is illustrated in Fig. 7 by those components within dashed line 701.

[0063] Computing device 700 may have additional features or functionality, and additional interfaces to facilitate communications between the basic configuration 701 and any required devices and interfaces. For example, a bus/interface controller 740 may be used to facilitate communications between the basic configuration 701 and one or more data storage devices 750 via a storage interface bus 741. The data storage devices 750 may be removable storage devices 751, non-removable storage devices 752, or a combination thereof. Examples of removable storage and

IPR2024-00135
Petitioners' Ex. 1002
Ex.1002.00124

non-removable storage devices include magnetic disk devices such as flexible disk drives and hard-disk drives (HDD), optical disk drives such as compact disk (CD) drives or digital versatile disk (DVD) drives, solid state drives (SSD), and tape drives to name a few. Example computer storage media may include volatile and nonvolatile, removable and non-removable media implemented in any method or technology for storage of information, such as computer readable instructions, data structures, program modules, or other data.

[0064] System memory 720, removable storage 751 and non-removable storage 752 are all examples of computer storage media. Computer storage media includes, but is not limited to, RAM, ROM, EEPROM, flash memory or other memory technology, CD-ROM, digital versatile disks (DVD) or other optical storage, magnetic cassettes, magnetic tape, magnetic disk storage or other magnetic storage devices, or any other medium which may be used to store the desired information and which may be accessed by computing device 700. Any such computer storage media may be part of device 700.

[0065] Computing device 700 may also include an interface bus 742 for facilitating communication from various interface devices (e.g., output interfaces, peripheral interfaces, and communication interfaces) to the basic configuration 701 via the bus/interface controller 740. Example output interfaces 760 may include a graphics processing unit 761 and an audio processing unit 762, which may be configured to communicate to various external devices such as a display or speakers via one or more A/V ports 763. Example peripheral interfaces 780 may include a serial interface controller

781 or a parallel interface controller 782, which may be configured to communicate with external devices such as input devices (e.g., keyboard, mouse, pen, voice input device, touch input device, etc.) or other peripheral devices (e.g., printer, scanner, etc.) via one or more I/O ports 783. An example communication interface 780 includes a network controller 781, which may be arranged to facilitate communications with one or more other computing devices 783 over a network communication via one or more communication ports 782. A communication connection is one example of a communication media. Communication media may typically be embodied by computer readable instructions, data structures, program modules, or other data in a modulated data signal, such as a carrier wave or other transport mechanism, and may include any information delivery media. A "modulated data signal" may be a signal that has one or more of its characteristics set or changed in such a manner as to encode information in the signal. By way of example, and not limitation, communication media may include wired media such as a wired network or direct-wired connection, and wireless media such as acoustic, radio frequency (RF), infrared (IR) and other wireless media. The term computer readable media as used herein may include both storage media and communication media.

[0066] Computing device 700 may be implemented as a portion of a small-form factor portable (or mobile) electronic device such as a cell phone, a mobile phone, a tablet device, a laptop computer, a personal data assistant (PDA), a personal media player device, a wireless web-watch device, a personal headset device, an application specific device, or a hybrid device that includes any of the above functions. Computing device 700 may also be

IPR2024-00135
Petitioners' Ex. 1002
Ex.1002.00126

implemented as a personal computer including both laptop computer and non-laptop computer configurations. In addition, computing device 700 may be implemented as part of a wireless base station or other wireless system or device.

[0067] Some portions of the foregoing detailed description are presented in terms of algorithms or symbolic representations of operations on data bits or binary digital signals stored within a computing system memory, such as a computer memory. These algorithmic descriptions or representations are examples of techniques used by those of ordinary skill in the data processing arts to convey the substance of their work to others skilled in the art. An algorithm is here, and generally, is considered to be a self-consistent sequence of operations or similar processing leading to a desired result. In this context, operations or processing involve physical manipulation of physical quantities. Typically, although not necessarily, such quantities may take the form of electrical or magnetic signals capable of being stored, transferred, combined, compared or otherwise manipulated. It has proven convenient at times, principally for reasons of common usage, to refer to such signals as bits, data, values, elements, symbols, characters, terms, numbers, numerals or the like. It should be understood, however, that all of these and similar terms are to be associated with appropriate physical quantities and are merely convenient labels. Unless specifically stated otherwise, as apparent from the following discussion, it is appreciated that throughout this specification discussions utilizing terms such as "processing," "computing," "calculating," "determining" or the like refer to actions or processes of a computing device, that manipulates or transforms data

represented as physical electronic or magnetic quantities within memories, registers, or other information storage devices, transmission devices, or display devices of the computing device.

[0068] The foregoing detailed description has set forth various embodiments of the devices and/or processes via the use of block diagrams, flowcharts, and/or examples. Insofar as such block diagrams, flowcharts, and/or examples contain one or more functions and/or operations, it will be understood by those within the art that each function and/or operation within such block diagrams, flowcharts, or examples can be implemented, individually and/or collectively, by a wide range of hardware, software, firmware, or virtually any combination thereof. In some embodiments, several portions of the subject matter described herein may be implemented via Application Specific Integrated Circuits (ASICs), Field Programmable Gate Arrays (FPGAs), digital signal processors (DSPs), or other integrated formats. However, those skilled in the art will recognize that some aspects of the embodiments disclosed herein, in whole or in part, can be equivalently implemented in integrated circuits, as one or more computer programs running on one or more computers (e.g., as one or more programs running on one or more computer systems), as one or more programs running on one or more processors (e.g., as one or more programs running on one or more microprocessors), as firmware, or as virtually any combination thereof, and that designing the circuitry and/or writing the code for the software and or firmware would be well within the skill of one of skill in the art in light of this disclosure. In addition, those skilled in the art will appreciate that the mechanisms of the subject matter described herein are capable of being

distributed as a program product in a variety of forms, and that an illustrative embodiment of the subject matter described herein applies regardless of the particular type of signal bearing medium used to actually carry out the distribution. Examples of a signal bearing medium include, but are not limited to, the following: a recordable type medium such as a flexible disk, a hard disk drive (HDD), a Compact Disc (CD), a Digital Versatile Disk (DVD), a digital tape, a computer memory, etc.; and a transmission type medium such as a digital and/or an analog communication medium (e.g., a fiber optic cable, a waveguide, a wired communication link, a wireless communication link, etc.).

[0069] The herein described subject matter sometimes illustrates different components contained within, or connected with, different other components. It is to be understood that such depicted architectures are merely examples and that in fact many other architectures can be implemented which achieve the same functionality. In a conceptual sense, any arrangement of components to achieve the same functionality is effectively "associated" such that the desired functionality is achieved. Hence, any two components herein combined to achieve a particular functionality can be seen as "associated with" each other such that the desired functionality is achieved, irrespective of architectures or intermedial components. Likewise, any two components so associated can also be viewed as being "operably connected", or "operably coupled", to each other to achieve the desired functionality, and any two components capable of being so associated can also be viewed as being "operably couplable", to each other to achieve the desired functionality. Specific examples of operably couplable include but are not limited to physically mateable and/or physically

interacting components and/or wirelessly interactable and/or wirelessly interacting components and/or logically interacting and/or logically interactable components.

[0070] With respect to the use of substantially any plural and/or singular terms herein, those having skill in the art can translate from the plural to the singular and/or from the singular to the plural as is appropriate to the context and/or application. The various singular/plural permutations may be expressly set forth herein for sake of clarity.

[0071] It will be understood by those within the art that, in general, terms used herein, and especially in the appended claims (e.g., bodies of the appended claims) are generally intended as "open" terms (e.g., the term "including" should be interpreted as "including but not limited to," the term "having" should be interpreted as "having at least," the term "includes" should be interpreted as "includes but is not limited to," etc.). It will be further understood by those within the art that if a specific number of an introduced claim recitation is intended, such an intent will be explicitly recited in the claim, and in the absence of such recitation no such intent is present. For example, as an aid to understanding, the following appended claims may contain usage of the introductory phrases "at least one" and "one or more" to introduce claim recitations. However, the use of such phrases should not be construed to imply that the introduction of a claim recitation by the indefinite articles "a" or "an" limits any particular claim containing such introduced claim recitation to inventions containing only one such recitation, even when the same claim includes the introductory phrases "one or more" or "at least one" and indefinite articles such as "a" or "an" (e.g., "a" and/or "an" should typically be

IPR2024-00135
Petitioners' Ex. 1002
Ex.1002.00130

interpreted to mean "at least one" or "one or more"); the same holds true for the use of definite articles used to introduce claim recitations. In addition, even if a specific number of an introduced claim recitation is explicitly recited, those skilled in the art will recognize that such recitation should typically be interpreted to mean at least the recited number (e.g., the bare recitation of "two recitations," without other modifiers, typically means at least two recitations, or two or more recitations). Furthermore, in those instances where a convention analogous to "at least one of A, B, and C, etc." is used, in general such a construction is intended in the sense one having skill in the art would understand the convention (e.g., "a system having at least one of A, B, and C" would include but not be limited to systems that have A alone, B alone, C alone, A and B together, A and C together, B and C together, and/or A, B, and C together, etc.). In those instances where a convention analogous to "at least one of A, B, or C, etc." is used, in general such a construction is intended in the sense one having skill in the art would understand the convention (e.g., "a system having at least one of A, B, or C" would include but not be limited to systems that have A alone, B alone, C alone, A and B together, A and C together, B and C together, and/or A, B, and C together, etc.). It will be further understood by those within the art that virtually any disjunctive word and/or phrase presenting two or more alternative terms, whether in the description, claims, or drawings, should be understood to contemplate the possibilities of including one of the terms, either of the terms, or both terms. For example, the phrase "A or B" will be understood to include the possibilities of "A" or "B" or "A and B."

IPR2024-00135
Petitioners' Ex. 1002
Ex.1002.00131

[0072] While certain example techniques have been described and shown herein using various methods and systems, it should be understood by those skilled in the art that various other modifications may be made, and equivalents may be substituted, without departing from claimed subject matter. Additionally, many modifications may be made to adapt a particular situation to the teachings of claimed subject matter without departing from the central concept described herein. Therefore, it is intended that claimed subject matter not be limited to the particular examples disclosed, but that such claimed subject matter also may include all implementations falling within the scope of the appended claims, and equivalents thereof.

IPR2024-00135
Petitioners' Ex. 1002
Ex.1002.00132

WHAT IS CLAIMED:

1. A method for providing network coverage for a group of devices in an area comprising:

cycling over time through a coverage sequence that includes providing a first coverage configuration and providing a second coverage configuration, wherein:

providing the first coverage configuration includes transmitting a first beam of a first network that is configured to provide coverage for the group of devices; and

providing the second coverage configuration includes transmitting a second beam of the first network that is narrower than the first beam and configured to provide coverage to at least one continuous use device of the group of devices, and providing coverage by a second network to a plurality of interval use devices of the group of devices.

2. The method of claim 1, wherein the providing the second coverage configuration comprises determining a direction of transmission for the second beam based at least in part on a location of the at least one continuous use device.

3. The method of claim 1, wherein the second beam of the first network is further configured to provide coverage to a second continuous use device of the group of devices.

IPR2024-00135
Petitioners' Ex. 1002
Ex.1002.00133

4. The method of claim 1, wherein a subsequent iteration of providing the second coverage configuration includes transmitting the second beam of the first network configured to provide coverage to a second continuous use device, and wherein the at least one continuous use device has transitioned to being an interval use device.

5. The method of claim 1, wherein the first network and the second network are different network types.

6. The method of claim 5, wherein the first network and the second network comprise at least one of the following: the first network is a Third Generation Mobile (3G) network and the second network is an Enhanced Data Rates for Global Evolution (EDGE) network, the first network is a Fourth Generation Mobile (4G) network and the second network is an Enhanced Data Rates for Global Evolution (EDGE) network, the first network is a Long Term Evolution (LTE) network and the second network is an Enhanced Data Rates for Global Evolution (EDGE) network, the first network is an Evolution-Data Optimized (EV-DO) network and the second network is a Code Division Multiple Access (CDMA) network, the first network is a Fourth Generation Mobile (4G) network and the second network is a Third Generation Mobile (3G) network, the first network is a data network and the second network is a voice network, or the first network is a data network and the second network is a mixed voice and data network.

7. The method of claim 1, wherein the first network and the second network are the same network types, and wherein the at least one continuous use device is allowed access to the second beam based on an admission control parameter.

8. The method of claim 1, wherein the first coverage configuration is provided for a first time duration and the second coverage configuration is provided for a second time duration that is longer than the first time duration.

9. The method of claim 8, wherein in the first time duration is in the range of about 2 to 5 minutes and the second time duration is in the range of about 2 to 10 seconds.

10. The method of claim 1, wherein the at least one continuous use device is engaged in at least one of a voice call, a download, or a content streaming.

11. The method of claim 1, wherein the plurality of interval use devices defer and batch data updates during the second coverage configuration and receive the data updates during the first coverage configuration.

12. The method of claim 1, wherein the second beam is narrower than the first beam in at least one of a horizontal plane or a vertical plane.

13. The method of claim 1, wherein the first beam is about 12 degrees wide and the second beam is about 1 degree wide.

IPR2024-00135
Petitioners' Ex. 1002
Ex.1002.00135

14. A method for providing network coverage for a group of devices in an area comprising:

cycling over time through a coverage sequence that includes providing a first coverage configuration, providing a second coverage configuration, and providing a third coverage configuration, wherein:

providing the first coverage configuration includes transmitting a first beam of a first network that is configured to provide coverage for a first set of the group of devices, and providing coverage by a second network to at least a second set of the group of devices;

providing the second coverage configuration includes transmitting a second beam of the first network that is configured to provide coverage for the second set of the group of devices, and providing coverage by the second network to at least the first set of the group of devices; and

providing the third coverage configuration includes transmitting a third beam of the first network that is narrower than the first beam and is configured to provide coverage to at least one continuous use device of the group of devices, and providing coverage by the second network to at least a plurality of interval use devices of the group.

15. The method of claim 14, wherein the first network and the second network comprise at least one of the following: the first network is a Third Generation Mobile (3G) network and the second network is an Enhanced Data Rates for Global Evolution (EDGE) network, the first network is a Fourth

Generation Mobile (4G) network and the second network is an Enhanced Data Rates for Global Evolution (EDGE) network, the first network is a Long Term Evolution (LTE) network and the second network is an Enhanced Data Rates for Global Evolution (EDGE) network, the first network is an Evolution-Data Optimized (EV-DO) network and the second network is a Code Division Multiple Access (CDMA) network, the first network is a Fourth Generation Mobile (4G) network and the second network is a Third Generation Mobile (3G) network, the first network is a data network and the second network is a voice network, or the first network is a data network and the second network is a mixed voice and data network.

16. The method of claim 14, wherein the third beam of the first network is further configured to provide coverage to a second continuous use device of the group of devices.

17. A machine readable non-transitory medium having stored therein instructions that, when executed, cause a device to provide a network coverage by:

cycling over time through a coverage sequence that includes providing a first coverage configuration and providing a second coverage configuration, wherein:

providing the first coverage configuration includes transmitting a first beam of a first network that is configured to provide coverage for the group of devices; and

providing the second coverage configuration includes transmitting a second beam of the first network that is narrower than the first beam and configured to provide coverage to at least one continuous use device of the group of devices, and providing coverage by a second network to a plurality of interval use devices of the group of devices.

18. The machine readable non-transitory medium of claim 17, wherein the first network and the second network are the same network types, and wherein the at least one active device is allowed access to the second beam based on an admission control parameter.

19. The machine readable non-transitory medium of claim 17, wherein the first coverage configuration is provided for a first time duration and the second beam shape is provided for a second time duration that is shorter than the first time duration.

20. A device comprising:

a machine readable medium having stored therein instructions that, when executed, cause the device to provide network coverage by:

cycling over time through a coverage sequence that includes providing a first coverage configuration and providing a second coverage configuration, wherein:

providing the first coverage configuration includes transmitting a first beam of a first network that is configured to provide coverage for the group of devices; and

providing the second coverage configuration includes transmitting a second beam of the first network that is narrower than the first beam and configured to provide coverage to at least one continuous use device of the group of devices, and providing coverage by a second network to a plurality of interval use devices of the group of devices;

a processor coupled to the machine readable medium to execute the instructions; and

an adaptive antenna configured to transmit the first beam and the second beam.

21. The device of claim 20, wherein the first network and the second network are the same network types, the at least one active device is allowed access to the second beam based on an admission control parameter, and the adaptive antenna is further configured to transmit a third beam of the second network.

22. The device of claim 20, further comprising:

a second antenna configured to provide a third beam of the second network.

23. A method for a device to receive data updates comprising:

cycling over time through an update sequence that includes:

deferring, during coverage by a first network, data updates for the device;

transmitting a data update request in response to coverage by a second network, wherein the second network is a more capable network than the first network; and

receiving, during the second coverage configuration, a data update.

24. The method of claim 23, wherein the device comprises at least one of a mobile phone, a smartphone, a laptop computer, a netbook device, a tablet device or a personal digital assistant.

25. The method of claim 23, wherein the update sequence further comprises:

batching the deferred data updates for the device.

26. The method of claim 23, wherein the data update includes at least one of an email update, an Really Simple Syndication (RSS) feed update, a social networking update, a software update, a map update, or a gaming update.

27. The method of claim 23, wherein the first network and the second network comprise at least one of the following: the first network is a Third Generation Mobile (3G) network and the second network is an Enhanced Data Rates for Global Evolution (EDGE) network, the first network is a Fourth

Generation Mobile (4G) network and the second network is an Enhanced Data Rates for Global Evolution (EDGE) network, the first network is a Long Term Evolution (LTE) network and the second network is an Enhanced Data Rates for Global Evolution (EDGE) network, the first network is an Evolution-Data Optimized (EV-DO) network and the second network is a Code Division Multiple Access (CDMA) network, the first network is a Fourth Generation Mobile (4G) network and the second network is a Third Generation Mobile (3G) network, the first network is a data network and the second network is a voice network, or the first network is a data network and the second network is a mixed voice and data network.

IPR2024-00135
Petitioners' Ex. 1002
Ex.1002.00141

ABSTRACT

Technologies and implementations for providing network coverage by cycling through beam shape coverage configurations are generally disclosed.

IPR2024-00135
Petitioners' Ex. 1002
Ex.1002.00142

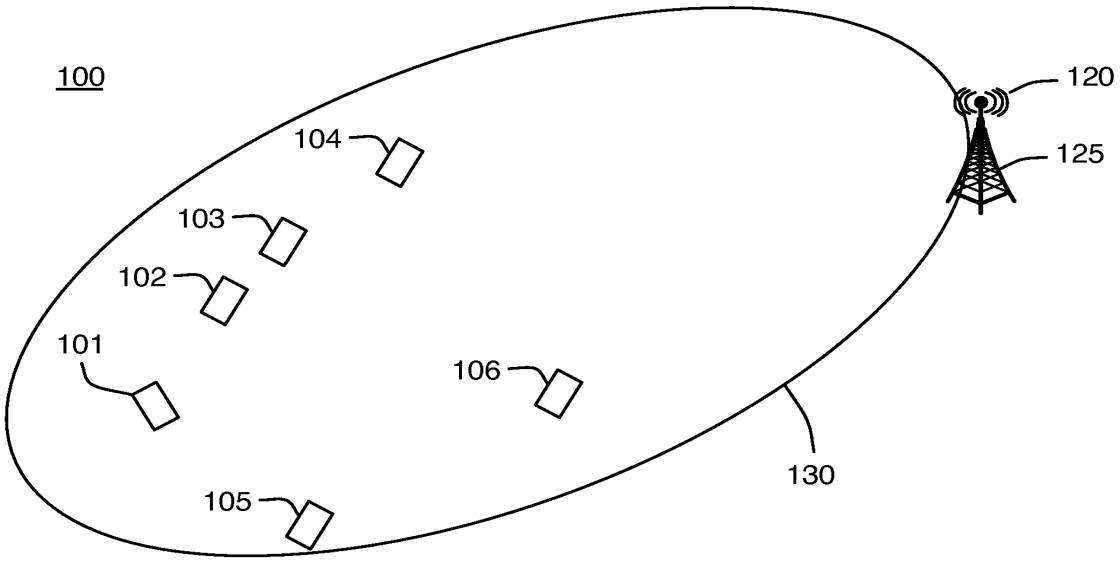
100
120
125
104
103
102
101
106
130
105

Fig. 1A

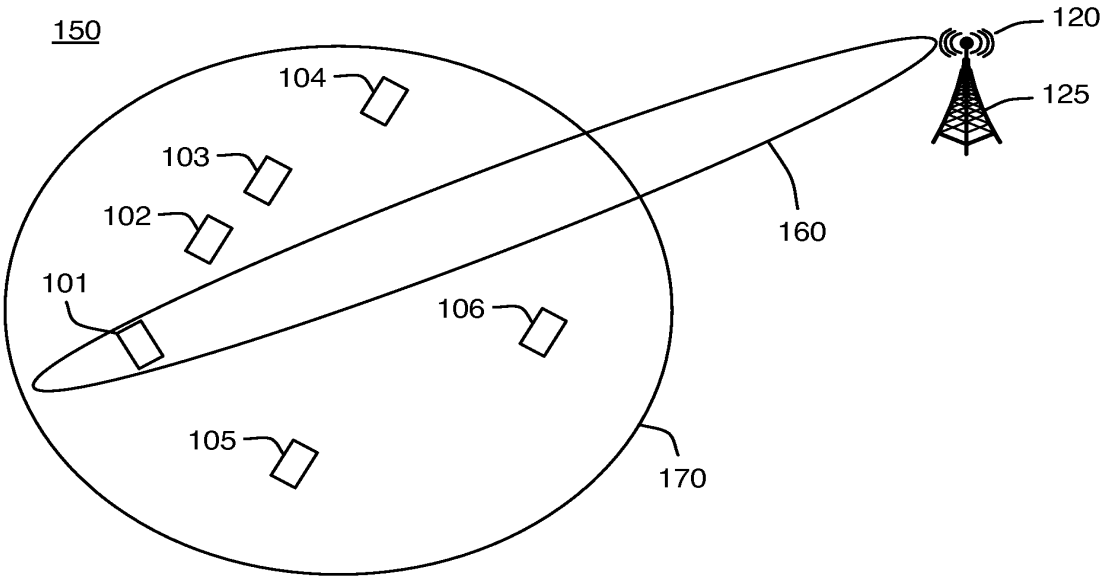
150
120
125
104
103
102
160
101
106
105
170

Fig. 1B

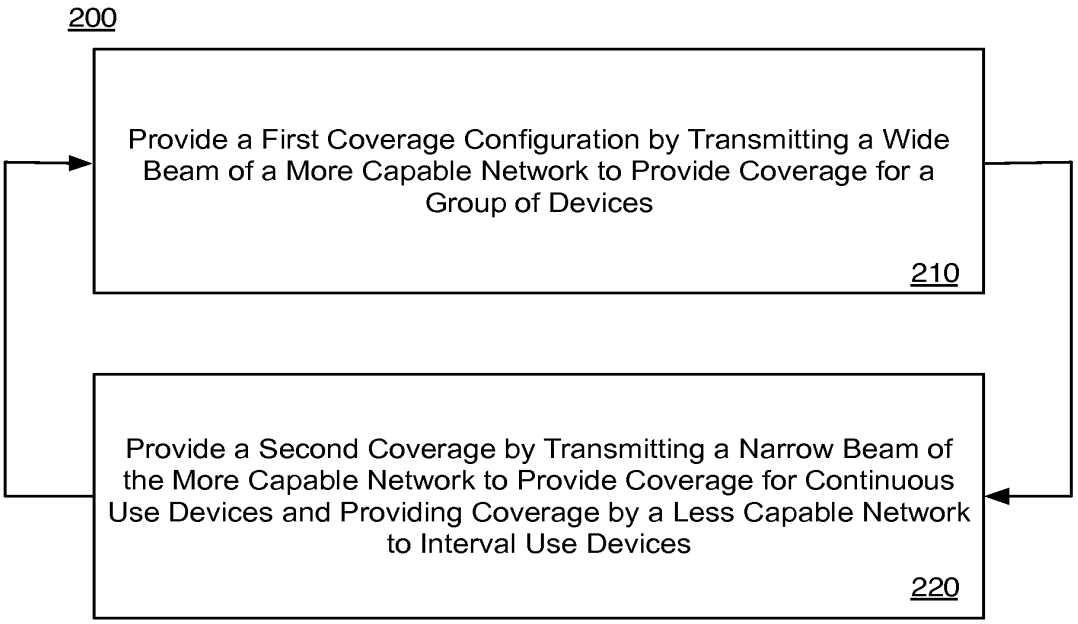
200
Provide a First Coverage Configuration by Transmitting a Wide Beam of a More Capable Network to Provide Coverage for a Group of Devices
210
Provide a Second Coverage by Transmitting a Narrow Beam of the More Capable Network to Provide Coverage for Continuous Use Devices and Providing Coverage by a Less Capable Network to Interval Use Devices
220

Fig. 2

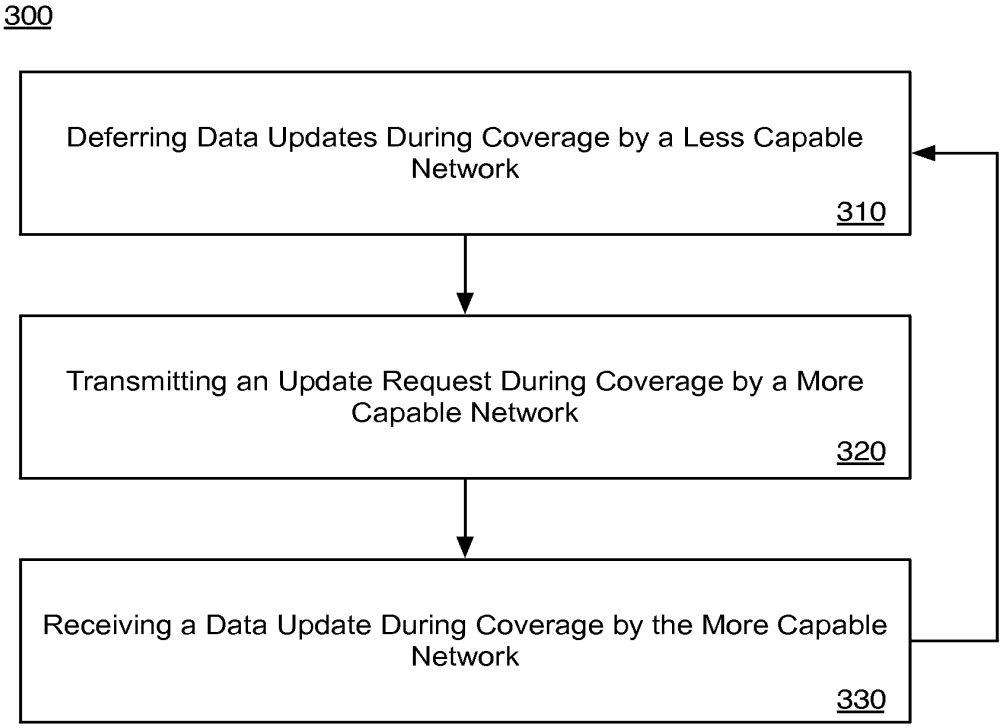
300
Deferring Data Updates During Coverage by a Less Capable Network
310
Transmitting an Update Request During Coverage by a More Capable Network
320
Receiving a Data Update During Coverage by the More Capable Network
330

Fig. 3

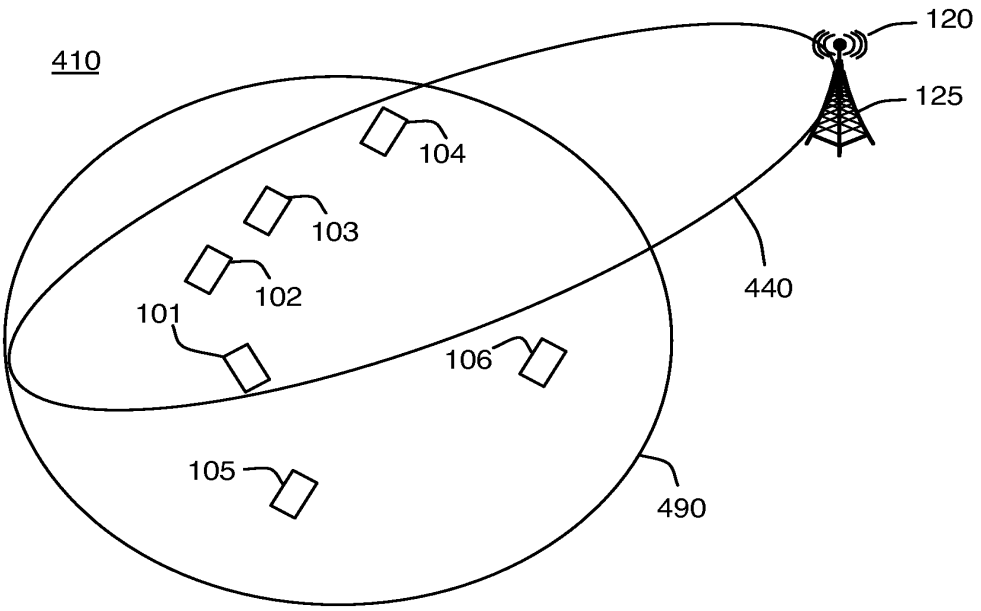
410
120
125
104
103
102
101
106
105
440
490

Fig. 4A

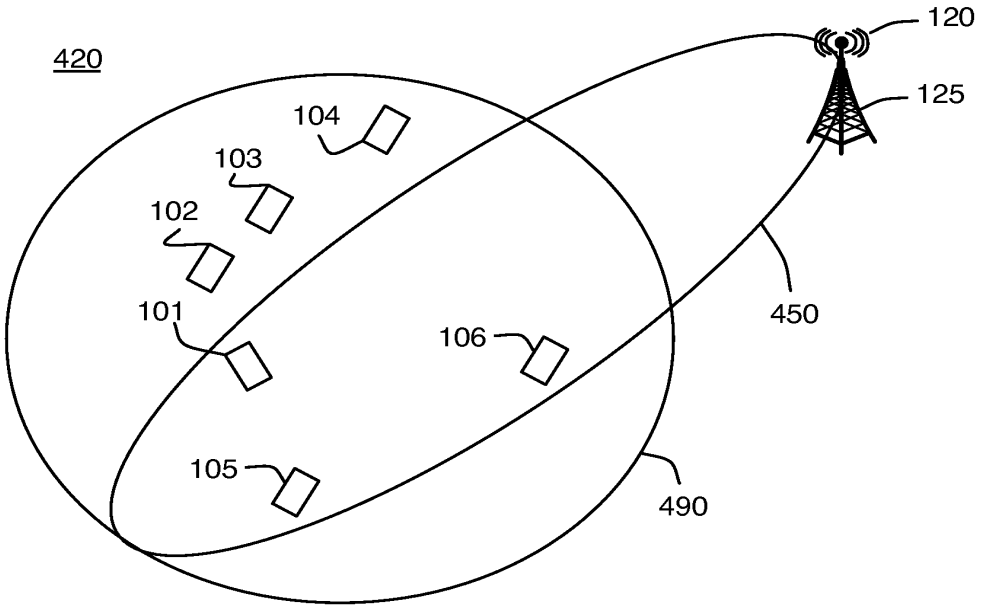
420
120
125
104
103
102
101
106
105
450
490

Fig. 4B

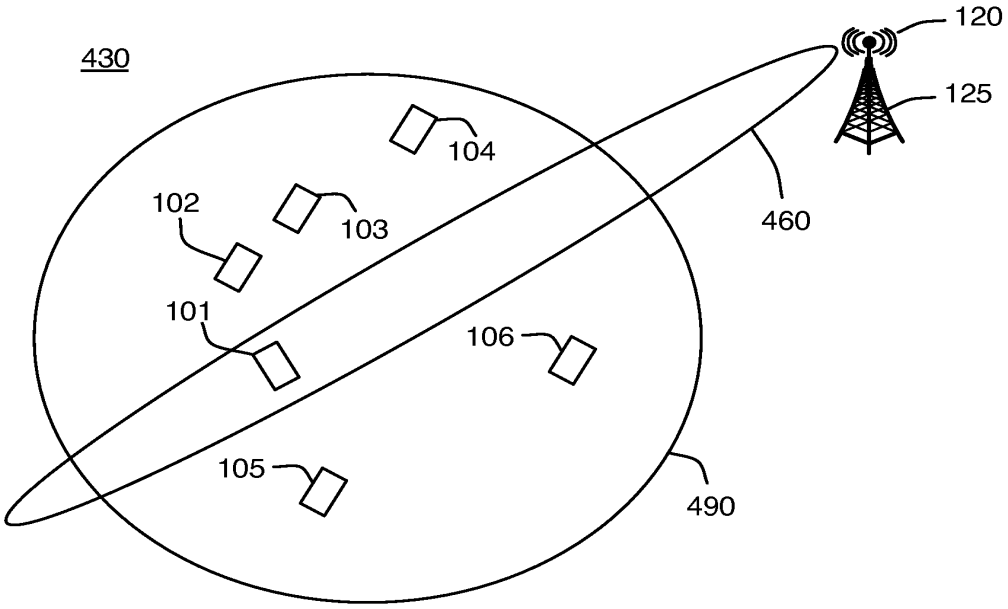

Fig. 4C

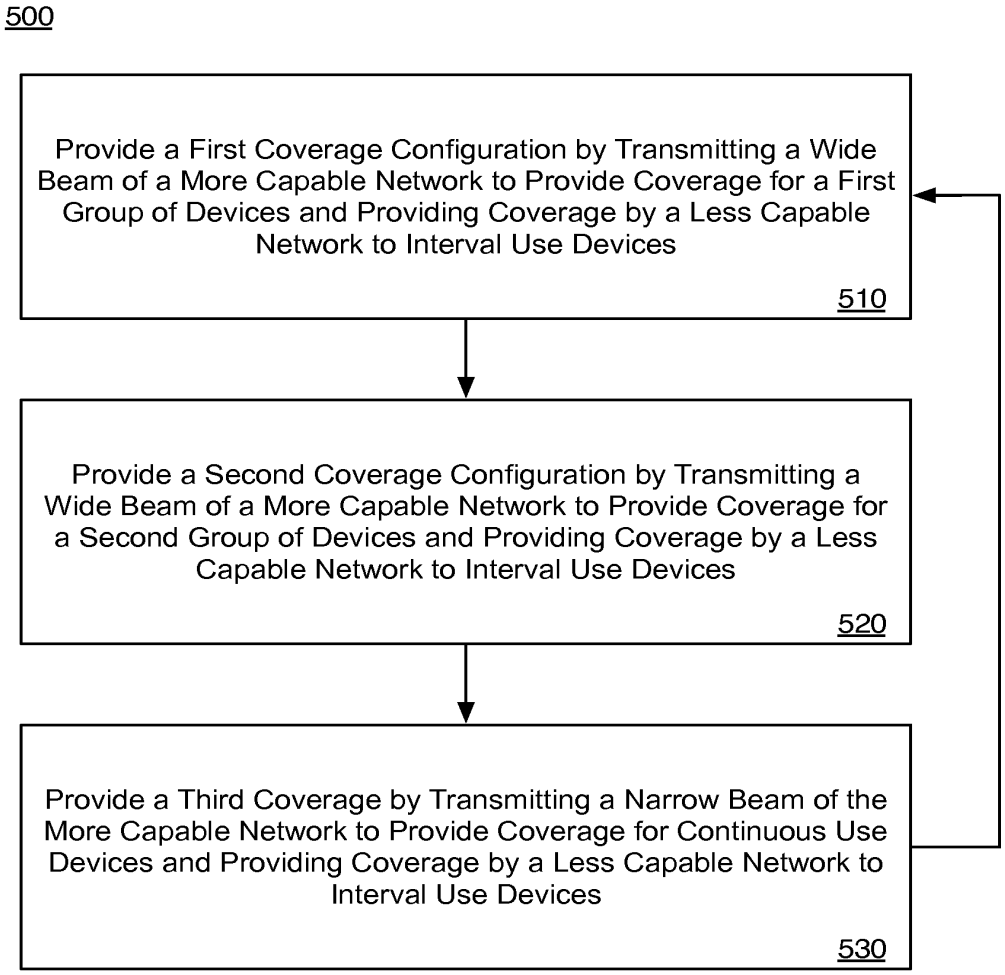
500
Provide a First Coverage Configuration by Transmitting a Wide Beam of a More Capable Network to Provide Coverage for a First Group of Devices and Providing Coverage by a Less Capable Network to Interval Use Devices
510
Provide a Second Coverage Configuration by Transmitting a Wide Beam of a More Capable Network to Provide Coverage for a Second Group of Devices and Providing Coverage by a Less Capable Network to Interval Use Devices
520
Provide a Third Coverage by Transmitting a Narrow Beam of the More Capable Network to Provide Coverage for Continuous Use Devices and Providing Coverage by a Less Capable Network to Interval Use Devices
530

Fig. 5

600 A computer program product

602 A signal bearing medium

604 Machine-readable instructions that, when executed, cause a computing device to:

cycle over time through a coverage sequence that includes providing a first coverage configuration and providing a second coverage configuration, wherein:

providing the first coverage configuration includes transmitting a first beam of a first network that is configured to provide coverage for the group of devices; and

providing the second coverage configuration includes transmitting a second beam of the first network that is narrower than the first beam and configured to provide coverage to at least one continuous use device of the group of devices, and providing coverage by a second network to a plurality of interval use devices of the group of devices;

cycle over time through a coverage sequence that includes providing a first coverage configuration, providing a second coverage configuration, and providing a third coverage configuration, wherein:

providing the first coverage configuration includes transmitting a first beam of a first network that is configured to provide coverage for a first set of the group of devices, and providing coverage by a second network to at least a second set of the group of devices;

providing the second coverage configuration includes transmitting a second beam of the first network that is configured to provide coverage for the second set of the group of devices, and providing coverage by the second network to at least the first set of the group of devices; and

providing the third coverage configuration includes transmitting a third beam of the first network that is narrower than the first beam and is configured to provide coverage to at least one continuous use device of the group of devices, and providing coverage by the second network to at least a plurality of interval use devices of the group; or

cycle over time through an update sequence that includes:

deferring, during coverage by a first network, data updates for the device;

transmitting a data update request in response to coverage by a second network, wherein the second network is a more capable network than the first network; and

receiving, during the second coverage configuration, a data update.

606 a computer-readable medium

608 a recordable medium

610 a communications medium

Fig. 6

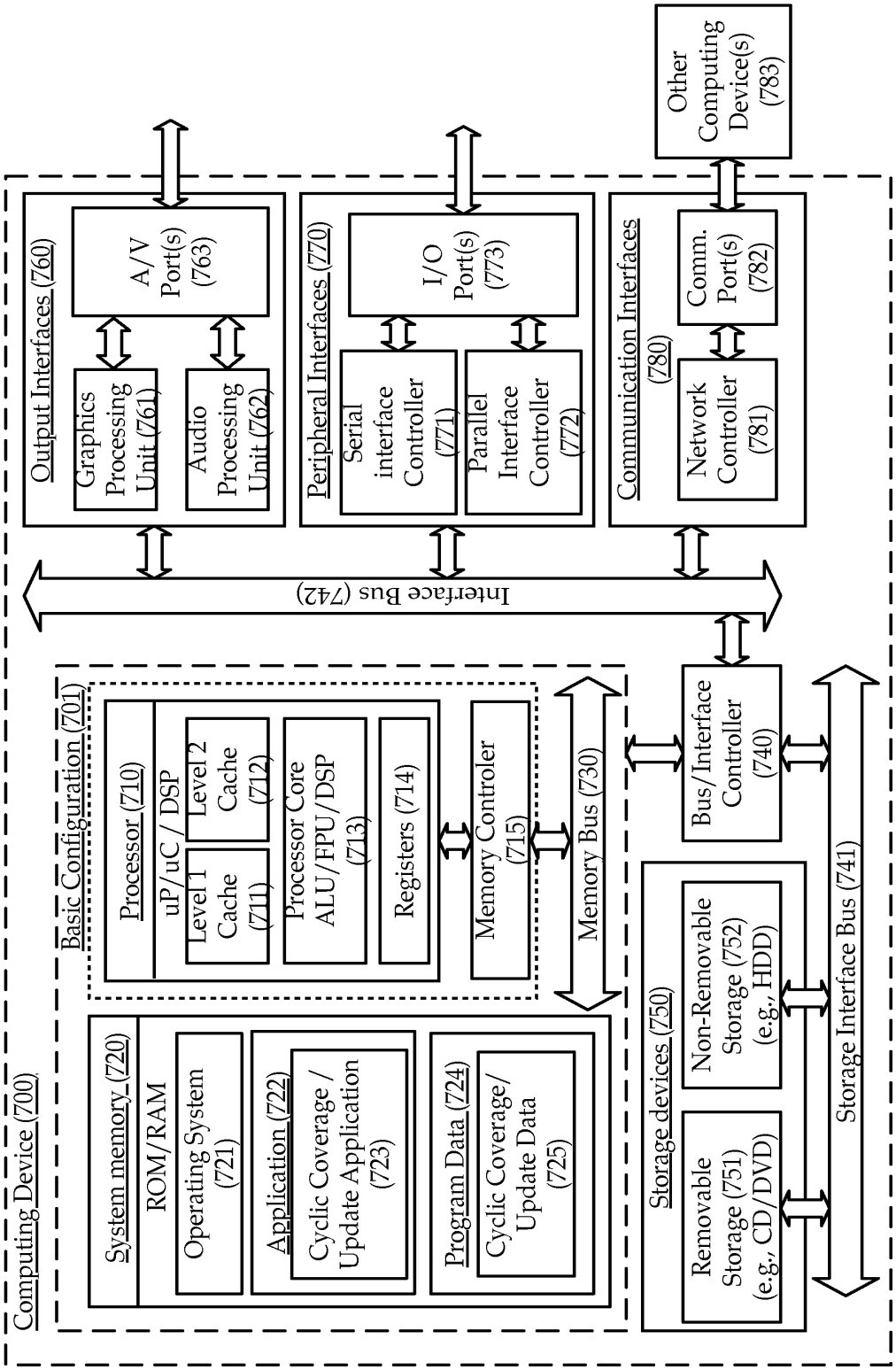
Computing Device (700)
Output Interfaces (760)
Graphics Processing Unit (761)
A/V Port(s) (763)
Audio Processing Unit (762)
Peripheral Interfaces (770)
Serial interface Controller (771)
I/O Port(s) (773)
Parallel Interface Controller (772)
Communication Interfaces (780)
Network Controller (781)
Comm. Port(s) (782)
Other Computing Device(s) (783)
Interface Bus (742)
Basic Configuration (701)
Processor (710)
uP/uC / DSP
Level 1 Cache (711)
Level 2 Cache (712)
Processor Core ALU/FPU/DSP (713)
Registers (714)
Memory Controler (715)
Memory Bus (730)
Bus/Interface Controller (740)
System memory (720)
ROM/RAM
Operating System (721)
Application (722)
Cyclic Coverage / Update Application (723)
Program Data (724)
Cyclic Coverage/ Update Data (725)
Storage devices (750)
Removable Storage (751) (e.g., CD/DVD)
Non-Removable Storage (752) (e.g., HDD)
Storage Interface Bus (741)

Fig. 7

This sheet is not part of and does not count as a sheet of the international application.

PCT

FEE CALCULATION SHEET
Annex to the Request

For receiving Office use only

International Application No.

Date stamp of the receiving Office

Applicant's or agent's file reference 006.PCT090

Applicant
Empire Technology Development LLC

CALCULATION OF PRESCRIBED FEES

1. TRANSMITTAL FEE . . . . . $240.00 [T]

2. SEARCH FEE . . . . . $2,084.00 [S]
International search to be carried out by AU
(If two or more International Searching Authorities are competent to carry out the international search, indicate the name of the Authority which is chosen to carry out the international search.)

3. INTERNATIONAL FILING FEE
Enter total number of sheets indicated in Box No IX: 66

[i1] first 30 sheets . . . . . $1,264.00 [i1]

[i2] 36 (number of sheets in excess of 30) x $15.00 (fee per sheet) = $540.00 [i2]

Add amounts entered at i1 and i2 and enter total at I . . . . $1,804.00 [I]
(Applicants from certain States are entitled to a reduction of 90% of the international filing fee. Where the applicant is (or all applicants are) so entitled, the total to be entered at I is 10% of the international filing fee.)

4. FEE FOR PRIORITY DOCUMENT *(if applicable)* . . . . . [P]

5. FEE FOR RESTORATION OF THE RIGHT OF PRIORITY *(if applicable)* . [RP]

6. FEE FOR EARLIER SEARCH DOCUMENTS *(if applicable)* . . . . . [ES]

7. TOTAL FEES PAYABLE $4,128.00
Add amounts entered at T, S, I, P, RP and ES, and enter total in the TOTAL box — TOTAL

MODE OF PAYMENT *(Not all modes of payment may be available at all receiving Offices)*

- [ ] authorization to charge deposit or current account (see below)
- [ ] postal money order
- [x] credit card *(details should be furnished separately and not included on this sheet)*
- [ ] cash
- [ ] cheque
- [ ] bank transfer
- [ ] revenue stamps
- [ ] other *(specify)*:

AUTHORIZATION TO CHARGE (OR CREDIT) DEPOSIT OR CURRENT ACCOUNT
(This mode of payment may not be available at all receiving Offices)

- [ ] Authorization to charge the total fees indicated above.
- [ ] *(This check-box may be marked only if the conditions for deposit or current accounts of the receiving Office so permit)* Authorization to charge any deficiency or credit any overpayment in the total fees indicated above.
- [ ] Authorization to charge the fee for priority document.

Receiving Office: RO/ _____
Deposit or Current Account No.: _____
Date: _____
Name: _____
Signature: _____

Form PCT/RO/101 (Annex) (January 2010)

See Notes to the fee calculation sheet

Electronic Acknowledgement Receipt

EFS ID:	13149938
Application Number:	13321792
International Application Number:	
Confirmation Number:	5874
Title of Invention:	NETWORK COVERAGE BY CYCLING THROUGH BEAM SHAPE COVERAGE CONFIGURATIONS
First Named Inventor/Applicant Name:	Ezekiel Kruglick
Customer Number:	65638
Filer:	Blayne Donnis Green/Lindsey Hunt
Filer Authorized By:	Blayne Donnis Green
Attorney Docket Number:	006.P090
Receipt Date:	29-JUN-2012
Filing Date:	
Time Stamp:	18:00:54
Application Type:	U.S. National Stage under 35 USC 371

Payment information:

Submitted with Payment	no

File Listing:

Document Number	Document Description	File Name	File Size(Bytes)/ Message Digest	Multi Part /.zip	Pages (if appl.)
1	Transmittal Letter	Transmittal_006_P090.pdf	242294 85c5428b496de43c357f0544805c32e27f30e942	no	4

Warnings:

Information:

2	Documents submitted with 371 Applications	Copy_IA_006_P090.pdf	4337597 fe972132d76b5f1d87d1f4a8afbbbd47bfd493ec	no	71

Warnings:

The PDF file has been signed with a digital signature and the legal effect of the document will be based on the contents of the file not the digital signature.

Information:

Total Files Size (in bytes):	4579891

This Acknowledgement Receipt evidences receipt on the noted date by the USPTO of the indicated documents, characterized by the applicant, and including page counts, where applicable. It serves as evidence of receipt similar to a Post Card, as described in MPEP 503.

<u>New Applications Under 35 U.S.C. 111</u>
If a new application is being filed and the application includes the necessary components for a filing date (see 37 CFR 1.53(b)-(d) and MPEP 506), a Filing Receipt (37 CFR 1.54) will be issued in due course and the date shown on this Acknowledgement Receipt will establish the filing date of the application.

<u>National Stage of an International Application under 35 U.S.C. 371</u>
If a timely submission to enter the national stage of an international application is compliant with the conditions of 35 U.S.C. 371 and other applicable requirements a Form PCT/DO/EO/903 indicating acceptance of the application as a national stage submission under 35 U.S.C. 371 will be issued in addition to the Filing Receipt, in due course.

<u>New International Application Filed with the USPTO as a Receiving Office</u>
If a new international application is being filed and the international application includes the necessary components for an international filing date (see PCT Article 11 and MPEP 1810), a Notification of the International Application Number and of the International Filing Date (Form PCT/RO/105) will be issued in due course, subject to prescriptions concerning national security, and the date shown on this Acknowledgement Receipt will establish the international filing date of the application.

PTO-1390 (09-11)
Approved for use through 4/30/2013. OMB 0651-0021
U.S. Patent and Trademark Office; U.S. DEPARTMENT OF COMMERCE
Under the Paperwork Reduction Act of 1995, no persons are required to respond to a collection of information unless it displays a valid OMB control number.

TRANSMITTAL LETTER TO THE UNITED STATES DESIGNATED/ELECTED OFFICE (DO/EO/US) CONCERNING A SUBMISSION UNDER 35 U.S.C. 371

ATTORNEY'S DOCKET NUMBER
006.P090

U.S. APPLICATION NO. (If known, see 37 CFR 1.5)
13/321,792

INTERNATIONAL APPLICATION NO.	INTERNATIONAL FILING DATE	PRIORITY DATE CLAIMED
PCT/US2011/049003	8/24/2011	8/24/2011

TITLE OF INVENTION
NETWORK COVERAGE BY CYCLING THROUGH BEAM SHAPE COVERAGE CONFIGURATIONS

APPLICANT(S) FOR DO/EO/US
Ezekiel Kruglick

Applicant herewith submits to the United States Designated/Elected Office (DO/EO/US) the following items and other information:

1. ☐ This is a **FIRST** submission of items concerning a submission under 35 U.S.C. 371.
2. ☑ This is a **SECOND** or **SUBSEQUENT** submission of items concerning a submission under 35 U.S.C. 371.
3. ☑ This is an express request to begin national examination procedures (35 U.S.C. 371(f)). The submission must include items (5), (6), (9) and (21) indicated below.
4. ☑ The US has been elected (Article 31).
5. ☑ A copy of the International Application as filed (35 U.S.C. 371(c)(2))
   a. ☑ is attached hereto (required only if not communicated by the International Bureau).
   b. ☐ has been communicated by the International Bureau.
   c. ☐ is not required, as the application was filed in the United States Receiving Office (RO/US).
6. ☐ An English language translation of the International Application as filed (35 U.S.C. 371(c)(2)).
   a. ☐ is attached hereto.
   b. ☐ has been previously submitted under 35 U.S.C. 154(d)(4).
7. ☑ Amendments to the claims of the International Application under PCT Article 19 (35 U.S.C. 371(c)(3))
   a. ☐ are attached hereto (required only if not communicated by the International Bureau).
   b. ☐ have been communicated by the International Bureau.
   c. ☑ have not been made; however, the time limit for making such amendments has NOT expired.
   d. ☐ have not been made and will not be made.
8. ☐ An English language translation of the amendments to the claims under PCT Article 19 (35 U.S.C. 371(c)(3)).
9. ☐ An oath or declaration of the inventor(s) (35 U.S.C. 371(c)(4)).
10. ☐ An English language translation of the annexes of the International Preliminary Examination Report under PCT Article 36 (35 U.S.C. 371(c)(5)).

Items 11 to 20 below concern document(s) or information included:

11. ☐ An Information Disclosure Statement under 37 CFR 1.97 and 1.98.
12. ☐ An assignment document for recording. A separate cover sheet in compliance with 37 CFR 3.28 and 3.31 is included.
13. ☐ A preliminary amendment.
14. ☐ An Application Data Sheet under 37 CFR 1.76.
15. ☐ A substitute specification.
16. ☐ A power of attorney and/or change of address letter.
17. ☐ A computer-readable form of the sequence listing in accordance with PCT Rule 13*ter*.3 and 37 CFR 1.821- 1.825.
18. ☐ A second copy of the published International Application under 35 U.S.C. 154(d)(4).
19. ☐ A second copy of the English language translation of the international application under 35 U.S.C. 154(d)(4).

This collection of information is required by 37 CFR 1.414 and 1.491-1 .492. The information is required to obtain or retain a b enefit by the public, w hich is to file (and by the USPTO to pro cess) an application . Confidentiality is governed by 35 U.S.C. 122 and 37 CFR 1.11 and 1.14. This collection is estimated to take 15 minutes to complete, including gathering information, preparing, and submitting the completed form to the USPTO. Time will vary depending upon the individual case. Any comments on the amount of time you require to complete this form and/or suggestions for reducing this burden, should be sent to the Chief Information Officer, U.S. Patent and Trademark Office, U.S. Department of Commerce, P.O. Box 1450, Alexandria, VA 22313-1450. DO NOT SEND FEE S OR COMPLE TED FORMS TO THIS ADDRESS. **SEND TO: Mail Stop PCT, Commissioner for Patents, P.O. Box 1450, Alexandria, VA 22313-1450.**

IPR2024-00135
Petitioners' Ex. 1002
Ex.1002.00153

U.S. APPLICATION NO. (if known, see 37 CFR 1.5)	INTERNATIONAL APPLICATION NO.	ATTORNEY'S DOCKET NUMBER
13/321,792	PCT/US2011/049003	006.P090

20. Other items or information:

The following fees have been submitted	CALCULATIONS	PTO USE ONLY
21. ☐ Basic national fee (37 CFR 1.492(a))…….....…….. **$380**	$	
22. ☐ Examination fee (37 CFR 1.492(c)) If the written opinion prepared by ISA/US or the international preliminary examination report prepared by IPEA/US indicates all claims satisfy provisions of PCT Article 33(1)-(4)…….. **$0** All other situations……..**$250**	$	
23. ☐ Search fee (37 CFR 1.492(b)) If the written opinion of the ISA/US or the International preliminary examination report prepared by IPEA/US indicates all claims satisfy provisions of PCT Article 33(1)-(4)……..... **$0** Search fee (37 CFR 1.445(a)(2)) has been paid on the international application to the USPTO as an International Searching Authority……..……..……**$120** International Search Report prepared by an ISA other than the US and provided to the Office or previously communicated to the US by the IB……..……..…..……..…. **$490** All other situations……**$620**	$	
TOTAL OF 21, 22 and 23 =		
☐ Additional fee for specification and drawings filed in paper over 100 sheets (excluding sequence listing in compliance with 37 CFR 1.821(c) or (e) in an electronic medium or computer program listing in an electronic medium) (37 CFR 1.492(j)). The fee is **$310** for each additional 50 sheets of paper or fraction thereof.		

Total Sheets	Extra Sheets	Number of each additional 50 or fraction thereof (round **up** to a whole number)	RATE		
- 100 =	/50 =		x $**310**	$	
Surcharge of **$130.00** for furnishing any of the search fee, examination fee, or the oath or declaration after the date of commencement of the national stage (37 CFR 1.492(h)).				$	

CLAIMS	NUMBER FILED	NUMBER EXTRA	RATE		
				$	
Total claims	- 20 =		x $ **60**	$	
Independent claims	- 3 =		x **$250**	$	
MULTIPLE DEPENDENT CLAIM(S) (if applicable)			+ **$450**	$	
			TOTAL OF ABOVE CALCULATIONS =	$	
☐ Applicant claims small entity status. See 37 CFR 1.27. Fees above are reduced by ½.					
			SUBTOTAL =	$	
Processing fee of **$130.00** for furnishing the English translation later than 30 months from the earliest claimed priority date (37 CFR 1.492(i)). +				$	
			TOTAL NATIONAL FEE =	$	
Fee for recording the enclosed assignment (37 CFR 1.21(h)). The assignment must be accompanied by an appropriate cover sheet (37 CFR 3.28, 3.31). **$40.00** per property +				$	
			TOTAL FEES ENCLOSED =	$	
				Amount to be refunded:	$
				Amount to be charged	$

IPR2024-00135
Petitioners' Ex. 1002
Ex.1002.00154

Under the Paperwork Reduction Act of 1995, no persons are required to respond to a collection of information unless it displays a valid OMB control number.

a. ☐ A check in the amount of $ _____ to cover the above fees is enclosed.

b. ☐ Please charge my Deposit Account No. _____ in the amount of $ _____ to cover the above fees.

c. ☐ The Commissioner is hereby authorized to charge any additional fees which may be required, or credit any overpayment to Deposit Account No. _____.

d. ☑ Fees are to be charged to a credit card. **WARNING:** Information on this form may become public. **Credit card information should not be included on this form.** Provide credit card information and authorization on PTO-2038. The PTO-2038 should only be mailed or faxed to the USPTO. However, when paying the basic national fee, the PTO-2038 may NOT be faxed to the USPTO.

ADVISORY: If filing by EFS-Web, do **NOT** attach the PTO-2038 form as a PDF along with your EFS-Web submission. Please be advised that this is **not** recommended and by doing so your **credit card information may be displayed via PAIR**. To protect your information, it is recommended paying fees online by using the electronic payment method.

NOTE: Where an appropriate time limit under 37 CFR 1.495 has not been met, a petition to revive (37 CFR 1.137(a) or (b)) must be filed and granted to restore the International Application to pending status.

SEND ALL CORRESPONDENCE TO:

Omikron IP Law Group
Attn: Blayne D. Green
16325 Boones Ferry Road Suite 204
Lake Oswego, Oregon 97035
US

/Blayne D. Green/
SIGNATURE

Blayne D. Green
NAME

56,198
REGISTRATION NUMBER

Privacy Act Statement

The **Privacy Act of 1974 (P.L. 93-579)** requires that you be given certain information in connection with your submission of the attached form related to a patent application or patent. Accordingly, pursuant to the requirements of the Act, please be advised that: (1) the general authority for the collection of this information is 35 U.S.C. 2(b)(2); (2) furnishing of the information solicited is voluntary; and (3) the principal purpose for which the information is used by the U.S. Patent and Trademark Office is to process and/or examine your submission related to a patent application or patent. If you do not furnish the requested information, the U.S. Patent and Trademark Office may not be able to process and/or examine your submission, which may result in termination of proceedings or abandonment of the application or expiration of the patent.

The information provided by you in this form will be subject to the following routine uses:

1. The information on this form will be treated confidentially to the extent allowed under the Freedom of Information Act (5 U.S.C. 552) and the Privacy Act (5 U.S.C 552a). Records from this system of records may be disclosed to the Department of Justice to determine whether disclosure of these records is required by the Freedom of Information Act.
2. A record from this system of records may be disclosed, as a routine use, in the course of presenting evidence to a court, magistrate, or administrative tribunal, including disclosures to opposing counsel in the course of settlement negotiations.
3. A record in this system of records may be disclosed, as a routine use, to a Member of Congress submitting a request involving an individual, to whom the record pertains, when the individual has requested assistance from the Member with respect to the subject matter of the record.
4. A record in this system of records may be disclosed, as a routine use, to a contractor of the Agency having need for the information in order to perform a contract. Recipients of information shall be required to comply with the requirements of the Privacy Act of 1974, as amended, pursuant to 5 U.S.C. 552a(m).
5. A record related to an International Application filed under the Patent Cooperation Treaty in this system of records may be disclosed, as a routine use, to the International Bureau of the World Intellectual Property Organization, pursuant to the Patent Cooperation Treaty.
6. A record in this system of records may be disclosed, as a routine use, to another federal agency for purposes of National Security review (35 U.S.C. 181) and for review pursuant to the Atomic Energy Act (42 U.S.C. 218(c)).
7. A record from this system of records may be disclosed, as a routine use, to the Administrator, General Services, or his/her designee, during an inspection of records conducted by GSA as part of that agency's responsibility to recommend improvements in records management practices and programs, under authority of 44 U.S.C. 2904 and 2906. Such disclosure shall be made in accordance with the GSA regulations governing inspection of records for this purpose, and any other relevant (*i.e.*, GSA or Commerce) directive. Such disclosure shall not be used to make determinations about individuals.
8. A record from this system of records may be disclosed, as a routine use, to the public after either publication of the application pursuant to 35 U.S.C. 122(b) or issuance of a patent pursuant to 35 U.S.C. 151. Further, a record may be disclosed, subject to the limitations of 37 CFR 1.14, as a routine use, to the public if the record was filed in an application which became abandoned or in which the proceedings were terminated and which application is referenced by either a published application, an application open to public inspection or an issued patent.
9. A record from this system of records may be disclosed, as a routine use, to a Federal, State, or local law enforcement agency, if the USPTO becomes aware of a violation or potential violation of law or regulation.

UNITED STATES PATENT AND TRADEMARK OFFICE

UNITED STATES DEPARTMENT OF COMMERCE
United States Patent and Trademark Office
Address: COMMISSIONER FOR PATENTS
P.O. Box 1450
Alexandria, Virginia 22313-1450
www.uspto.gov

U.S. APPLICATION NUMBER NO.	FIRST NAMED APPLICANT	ATTY. DOCKET NO.
13/321,792	Ezekiel Kruglick	006.P090

65638
OMIKRON IP LAW GROUP
16325 Boones Ferry Rd.
SUITE 204
LAKE OSWEGO, OR 97035

INTERNATIONAL APPLICATION NO.	
PCT/US11/49003	
I.A. FILING DATE	PRIORITY DATE
08/24/2011	

CONFIRMATION NO. 5874
371 ACCEPTANCE LETTER

OC000000056783083

Date Mailed: 10/01/2012

NOTICE OF ACCEPTANCE OF APPLICATION UNDER 35 U.S.C 371 AND 37 CFR 1.495

The applicant is hereby advised that the United States Patent and Trademark Office in its capacity as a Designated / Elected Office (37 CFR 1.495), has determined that the above identified international application has met the requirements of 35 U.S.C. 371, and is ACCEPTED for national patentability examination in the United States Patent and Trademark Office.

The United States Application Number assigned to the application is shown above and the relevant dates are:

11/21/2011	11/21/2011
DATE OF RECEIPT OF 35 U.S.C. 371(c)(1), (c)(2) and (c)(4) REQUIREMENTS	DATE OF COMPLETION OF ALL 35 U.S.C. 371 REQUIREMENTS

A Filing Receipt (PTO-103X) will be issued for the present application in due course. **THE DATE APPEARING ON THE FILING RECEIPT AS THE " FILING DATE" IS THE DATE ON WHICH THE LAST OF THE 35 U.S.C. 371 (c)(1), (c)(2) and (c)(4) REQUIREMENTS HAS BEEN RECEIVED IN THE OFFICE. THIS DATE IS SHOWN ABOVE.** *The filing date of the above identified application is the international filing date of the international application (Article 11(3) and 35 U.S.C. 363).* Once the Filing Receipt has been received, send all correspondence to the Group Art Unit designated thereon.

The following items have been received:

- Copy of the International Application filed on 11/21/2011
- English Translation of the IA filed on 11/21/2011
- Copy of the International Search Report filed on 11/21/2011
- Information Disclosure Statements filed on 11/21/2011
- Oath or Declaration filed on 11/21/2011
- Request for Immediate Examination filed on 11/21/2011
- U.S. Basic National Fees filed on 11/21/2011
- Power of Attorney filed on 11/21/2011
- Specification filed on 11/21/2011
- Claims filed on 11/21/2011
- Abstracts filed on 11/21/2011
- Drawings filed on 11/21/2011

FORM PCT/DO/EO/903 (371 Acceptance Notice)

IPR2024-00135
Petitioners' Ex. 1002
Ex.1002.00157

Applicant is reminded that any communications to the United States Patent and Trademark Office must be mailed to the address given in the heading and include the U.S. application no. shown above (37 CFR 1.5)

PAULETTE R KIDWELL

Telephone: (571) 272-0398

UNITED STATES PATENT AND TRADEMARK OFFICE

UNITED STATES DEPARTMENT OF COMMERCE
United States Patent and Trademark Office
Address: COMMISSIONER FOR PATENTS
P.O. Box 1450
Alexandria, Virginia 22313-1450
www.uspto.gov

APPLICATION NUMBER	FILING or 371(c) DATE	GRP ART UNIT	FIL FEE REC'D	ATTY.DOCKET.NO	TOT CLAIMS	IND CLAIMS
13/321,792	11/21/2011		2040	006.P090	27	5

CONFIRMATION NO. 5874

FILING RECEIPT

OC000000056783082

65638
OMIKRON IP LAW GROUP
16325 Boones Ferry Rd.
SUITE 204
LAKE OSWEGO, OR 97035

Date Mailed: 10/01/2012

Receipt is acknowledged of this non-provisional patent application. The application will be taken up for examination in due course. Applicant will be notified as to the results of the examination. Any correspondence concerning the application must include the following identification information: the U.S. APPLICATION NUMBER, FILING DATE, NAME OF APPLICANT, and TITLE OF INVENTION. Fees transmitted by check or draft are subject to collection. Please verify the accuracy of the data presented on this receipt. **If an error is noted on this Filing Receipt, please submit a written request for a Filing Receipt Correction. Please provide a copy of this Filing Receipt with the changes noted thereon. If you received a "Notice to File Missing Parts" for this application, please submit any corrections to this Filing Receipt with your reply to the Notice. When the USPTO processes the reply to the Notice, the USPTO will generate another Filing Receipt incorporating the requested corrections**

Inventor(s)
Ezekiel Kruglick, Poway, CA;

Applicant(s)
Ezekiel Kruglick, Poway, CA;

Assignment For Published Patent Application
EMPIRE TECHNOLOGY DEVELOPMENT LLC, Wilmington, DE

Power of Attorney: The patent practitioners associated with Customer Number 65638

Domestic Priority data as claimed by applicant
This application is a 371 of PCT/US11/49003 08/24/2011

Foreign Applications (You may be eligible to benefit from the **Patent Prosecution Highway** program at the USPTO. Please see http://www.uspto.gov for more information.)

If Required, Foreign Filing License Granted: 04/10/2012

The country code and number of your priority application, to be used for filing abroad under the Paris Convention, is **US 13/321,792**

Projected Publication Date: 02/28/2013

Non-Publication Request: No

Early Publication Request: No

IPR2024-00135
Petitioners' Ex. 1002
Ex.1002.00159

Title

NETWORK COVERAGE BY CYCLING THROUGH BEAM SHAPE COVERAGE CONFIGURATIONS

Preliminary Class

PROTECTING YOUR INVENTION OUTSIDE THE UNITED STATES

Since the rights granted by a U.S. patent extend only throughout the territory of the United States and have no effect in a foreign country, an inventor who wishes patent protection in another country must apply for a patent in a specific country or in regional patent offices. Applicants may wish to consider the filing of an international application under the Patent Cooperation Treaty (PCT). An international (PCT) application generally has the same effect as a regular national patent application in each PCT-member country. The PCT process **simplifies** the filing of patent applications on the same invention in member countries, but **does not result** in a grant of "an international patent" and does not eliminate the need of applicants to file additional documents and fees in countries where patent protection is desired.

Almost every country has its own patent law, and a person desiring a patent in a particular country must make an application for patent in that country in accordance with its particular laws. Since the laws of many countries differ in various respects from the patent law of the United States, applicants are advised to seek guidance from specific foreign countries to ensure that patent rights are not lost prematurely.

Applicants also are advised that in the case of inventions made in the United States, the Director of the USPTO must issue a license before applicants can apply for a patent in a foreign country. The filing of a U.S. patent application serves as a request for a foreign filing license. The application's filing receipt contains further information and guidance as to the status of applicant's license for foreign filing.

Applicants may wish to consult the USPTO booklet, "General Information Concerning Patents" (specifically, the section entitled "Treaties and Foreign Patents") for more information on timeframes and deadlines for filing foreign patent applications. The guide is available either by contacting the USPTO Contact Center at 800-786-9199, or it can be viewed on the USPTO website at http://www.uspto.gov/web/offices/pac/doc/general/index.html.

For information on preventing theft of your intellectual property (patents, trademarks and copyrights), you may wish to consult the U.S. Government website, http://www.stopfakes.gov. Part of a Department of Commerce initiative, this website includes self-help "toolkits" giving innovators guidance on how to protect intellectual property in specific countries such as China, Korea and Mexico. For questions regarding patent enforcement issues, applicants may call the U.S. Government hotline at 1-866-999-HALT (1-866-999-4158).

LICENSE FOR FOREIGN FILING UNDER

Title 35, United States Code, Section 184

Title 37, Code of Federal Regulations, 5.11 & 5.15

GRANTED

The applicant has been granted a license under 35 U.S.C. 184, if the phrase "IF REQUIRED, FOREIGN FILING LICENSE GRANTED" followed by a date appears on this form. Such licenses are issued in all applications where the conditions for issuance of a license have been met, regardless of whether or not a license may be required as

IPR2024-00135
Petitioners' Ex. 1002
Ex.1002.00160

set forth in 37 CFR 5.15. The scope and limitations of this license are set forth in 37 CFR 5.15(a) unless an earlier license has been issued under 37 CFR 5.15(b). The license is subject to revocation upon written notification. The date indicated is the effective date of the license, unless an earlier license of similar scope has been granted under 37 CFR 5.13 or 5.14.

This license is to be retained by the licensee and may be used at any time on or after the effective date thereof unless it is revoked. This license is automatically transferred to any related applications(s) filed under 37 CFR 1.53(d). This license is not retroactive.

The grant of a license does not in any way lessen the responsibility of a licensee for the security of the subject matter as imposed by any Government contract or the provisions of existing laws relating to espionage and the national security or the export of technical data. Licensees should apprise themselves of current regulations especially with respect to certain countries, of other agencies, particularly the Office of Defense Trade Controls, Department of State (with respect to Arms, Munitions and Implements of War (22 CFR 121-128)); the Bureau of Industry and Security, Department of Commerce (15 CFR parts 730-774); the Office of Foreign AssetsControl, Department of Treasury (31 CFR Parts 500+) and the Department of Energy.

NOT GRANTED

No license under 35 U.S.C. 184 has been granted at this time, if the phrase "IF REQUIRED, FOREIGN FILING LICENSE GRANTED" DOES NOT appear on this form. Applicant may still petition for a license under 37 CFR 5.12, if a license is desired before the expiration of 6 months from the filing date of the application. If 6 months has lapsed from the filing date of this application and the licensee has not received any indication of a secrecy order under 35 U.S.C. 181, the licensee may foreign file the application pursuant to 37 CFR 5.15(b).

SelectUSA

The United States represents the largest, most dynamic marketplace in the world and is an unparalleled location for business investment, innovation and commercialization of new technologies. The USA offers tremendous resources and advantages for those who invest and manufacture goods here. Through SelectUSA, our nation works to encourage, facilitate, and accelerate business investment. To learn more about why the USA is the best country in the world to develop technology, manufacture products, and grow your business, visit SelectUSA.gov.

PATENT APPLICATION FEE DETERMINATION RECORD

Substitute for Form PTO-875

Application or Docket Number
13/321,792

APPLICATION AS FILED - PART I

FOR	(Column 1) NUMBER FILED	(Column 2) NUMBER EXTRA	SMALL ENTITY RATE($)	SMALL ENTITY FEE($)	OR	OTHER THAN SMALL ENTITY RATE($)	OTHER THAN SMALL ENTITY FEE($)
BASIC FEE (37 CFR 1.16(a), (b), or (c))	N/A	N/A	N/A			N/A	380
SEARCH FEE (37 CFR 1.16(k), (i), or (m))	N/A	N/A	N/A			N/A	490
EXAMINATION FEE (37 CFR 1.16(o), (p), or (q))	N/A	N/A	N/A			N/A	250
TOTAL CLAIMS (37 CFR 1.16(i))	27 minus 20 =	* 7			OR	x 60 =	420
INDEPENDENT CLAIMS (37 CFR 1.16(h))	5 minus 3 =	* 2				x 250 =	500
APPLICATION SIZE FEE (37 CFR 1.16(s))	If the specification and drawings exceed 100 sheets of paper, the application size fee due is $310 ($155 for small entity) for each additional 50 sheets or fraction thereof. See 35 U.S.C. 41(a)(1)(G) and 37 CFR 1.16(s).						0.00
MULTIPLE DEPENDENT CLAIM PRESENT (37 CFR 1.16(j))							0.00
* If the difference in column 1 is less than zero, enter "0" in column 2.			TOTAL			TOTAL	2040

APPLICATION AS AMENDED - PART II

		(Column 1) CLAIMS REMAINING AFTER AMENDMENT		(Column 2) HIGHEST NUMBER PREVIOUSLY PAID FOR	(Column 3) PRESENT EXTRA	SMALL ENTITY RATE($)	SMALL ENTITY ADDITIONAL FEE($)	OR	OTHER THAN SMALL ENTITY RATE($)	OTHER THAN SMALL ENTITY ADDITIONAL FEE($)
AMENDMENT A	Total (37 CFR 1.16(i))	*	Minus	**	=	x =		OR	x =	
AMENDMENT A	Independent (37 CFR 1.16(h))	*	Minus	***	=	x =		OR	x =	
AMENDMENT A	Application Size Fee (37 CFR 1.16(s))									
AMENDMENT A	FIRST PRESENTATION OF MULTIPLE DEPENDENT CLAIM (37 CFR 1.16(j))							OR		
						TOTAL ADD'L FEE		OR	TOTAL ADD'L FEE	

		(Column 1) CLAIMS REMAINING AFTER AMENDMENT		(Column 2) HIGHEST NUMBER PREVIOUSLY PAID FOR	(Column 3) PRESENT EXTRA	RATE($)	ADDITIONAL FEE($)		RATE($)	ADDITIONAL FEE($)
AMENDMENT B	Total (37 CFR 1.16(i))	*	Minus	**	=	x =		OR	x =	
AMENDMENT B	Independent (37 CFR 1.16(h))	*	Minus	***	=	x =		OR	x =	
AMENDMENT B	Application Size Fee (37 CFR 1.16(s))									
AMENDMENT B	FIRST PRESENTATION OF MULTIPLE DEPENDENT CLAIM (37 CFR 1.16(j))							OR		
						TOTAL ADD'L FEE		OR	TOTAL ADD'L FEE	

* If the entry in column 1 is less than the entry in column 2, write "0" in column 3.
** If the "Highest Number Previously Paid For" IN THIS SPACE is less than 20, enter "20".
*** If the "Highest Number Previously Paid For" IN THIS SPACE is less than 3, enter "3".
The "Highest Number Previously Paid For" (Total or Independent) is the highest found in the appropriate box in column 1.

UNITED STATES PATENT AND TRADEMARK OFFICE

UNITED STATES DEPARTMENT OF COMMERCE
United States Patent and Trademark Office
Address: COMMISSIONER FOR PATENTS
P.O. Box 1450
Alexandria, Virginia 22313-1450
www.uspto.gov

APPLICATION NUMBER	FILING OR 371(C) DATE	FIRST NAMED APPLICANT	ATTY. DOCKET NO./TITLE
13/321,792	11/21/2011	Ezekiel Kruglick	006.P090

CONFIRMATION NO. 5874

POA ACCEPTANCE LETTER

65638
OMIKRON IP LAW GROUP
16325 Boones Ferry Rd.
SUITE 204
LAKE OSWEGO, OR 97035

OC000000057287556

Date Mailed: 10/26/2012

NOTICE OF ACCEPTANCE OF POWER OF ATTORNEY

This is in response to the Power of Attorney filed 11/21/2011.

The Power of Attorney in this application is accepted. Correspondence in this application will be mailed to the above address as provided by 37 CFR 1.33.

/qtran/

Office of Data Management, Application Assistance Unit (571) 272-4000, or (571) 272-4200, or 1-888-786-0101

UNITED STATES PATENT AND TRADEMARK OFFICE

UNITED STATES DEPARTMENT OF COMMERCE
United States Patent and Trademark Office
Address: COMMISSIONER FOR PATENTS
P.O. Box 1450
Alexandria, Virginia 22313-1450
www.uspto.gov

APPLICATION NO.	FILING DATE	FIRST NAMED INVENTOR	ATTORNEY DOCKET NO.	CONFIRMATION NO.
13/321,792	11/21/2011	Ezekiel Kruglick	006.P090	5874

65638 7590 11/21/2012
OMIKRON IP LAW GROUP
16325 Boones Ferry Rd.
SUITE 204
LAKE OSWEGO, OR 97035

EXAMINER
BHATTACHARYA, SAM

ART UNIT	PAPER NUMBER
2646	

MAIL DATE	DELIVERY MODE
11/21/2012	PAPER

Please find below and/or attached an Office communication concerning this application or proceeding.

The time period for reply, if any, is set in the attached communication.

PTOL-90A (Rev. 04/07)

Office Action Summary	Application No.	Applicant(s)	
	13/321,792	KRUGLICK, EZEKIEL	
	Examiner	Art Unit	
	Sam Bhattacharya	2646	

-- The MAILING DATE of this communication appears on the cover sheet with the correspondence address --

Period for Reply

A SHORTENED STATUTORY PERIOD FOR REPLY IS SET TO EXPIRE 3 MONTH(S) OR THIRTY (30) DAYS, WHICHEVER IS LONGER, FROM THE MAILING DATE OF THIS COMMUNICATION.

- Extensions of time may be available under the provisions of 37 CFR 1.136(a). In no event, however, may a reply be timely filed after SIX (6) MONTHS from the mailing date of this communication.
- If NO period for reply is specified above, the maximum statutory period will apply and will expire SIX (6) MONTHS from the mailing date of this communication.
- Failure to reply within the set or extended period for reply will, by statute, cause the application to become ABANDONED (35 U.S.C. § 133). Any reply received by the Office later than three months after the mailing date of this communication, even if timely filed, may reduce any earned patent term adjustment. See 37 CFR 1.704(b).

Status

1)☐ Responsive to communication(s) filed on _____.

2a)☐ This action is **FINAL**. 2b)☒ This action is non-final.

3)☐ An election was made by the applicant in response to a restriction requirement set forth during the interview on _____; the restriction requirement and election have been incorporated into this action.

4)☐ Since this application is in condition for allowance except for formal matters, prosecution as to the merits is closed in accordance with the practice under *Ex parte Quayle*, 1935 C.D. 11, 453 O.G. 213.

Disposition of Claims

5)☒ Claim(s) *1-27* is/are pending in the application.

5a) Of the above claim(s) _____ is/are withdrawn from consideration.

6)☐ Claim(s) _____ is/are allowed.

7)☒ Claim(s) *1-27* is/are rejected.

8)☐ Claim(s) _____ is/are objected to.

9)☐ Claim(s) _____ are subject to restriction and/or election requirement.

* If any claims have been determined allowable, you may be eligible to benefit from the **Patent Prosecution Highway** program at a participating intellectual property office for the corresponding application. For more information, please see http://www.uspto.gov/patents/init_events/pph/index.jsp or send an inquiry to PPHfeedback@uspto.gov.

Application Papers

10)☐ The specification is objected to by the Examiner.

11)☐ The drawing(s) filed on _____ is/are: a)☐ accepted or b)☐ objected to by the Examiner.

Applicant may not request that any objection to the drawing(s) be held in abeyance. See 37 CFR 1.85(a).

Replacement drawing sheet(s) including the correction is required if the drawing(s) is objected to. See 37 CFR 1.121(d).

Priority under 35 U.S.C. § 119

12)☐ Acknowledgment is made of a claim for foreign priority under 35 U.S.C. § 119(a)-(d) or (f).

a)☐ All b)☐ Some * c)☐ None of:

1.☐ Certified copies of the priority documents have been received.

2.☐ Certified copies of the priority documents have been received in Application No. _____.

3.☐ Copies of the certified copies of the priority documents have been received in this National Stage application from the International Bureau (PCT Rule 17.2(a)).

* See the attached detailed Office action for a list of the certified copies not received.

Attachment(s)

1) ☒ Notice of References Cited (PTO-892)

2) ☒ Information Disclosure Statement(s) (PTO/SB/08) Paper No(s)/Mail Date _____.

3) ☐ Interview Summary (PTO-413) Paper No(s)/Mail Date. _____ .

4) ☐ Other: _____.

IPR2024-00135
Petitioners' Ex. 1002
Ex.1002.00165

DETAILED ACTION

Claim Rejections - 35 USC § 103

1. The following is a quotation of 35 U.S.C. 103(a) which forms the basis for all obviousness rejections set forth in this Office action:

> (a) A patent may not be obtained though the invention is not identically disclosed or described as set forth in section 102 of this title, if the differences between the subject matter sought to be patented and the prior art are such that the subject matter as a whole would have been obvious at the time the invention was made to a person having ordinary skill in the art to which said subject matter pertains. Patentability shall not be negatived by the manner in which the invention was made.

2. Claims 1-27 are rejected under 35 U.S.C. 103(a) as being unpatentable over Vendryes (US 6,546,259) in view of Gale et al. (US 2011/0223925).

Regarding claim 1, Vendryes discloses a method for providing network coverage for a group of devices in an area comprising: cycling over time through a coverage sequence that includes providing a first coverage configuration and providing a second coverage configuration, wherein: providing the first coverage configuration includes transmitting a first beam of a first network that is configured to provide coverage for the group of devices (Fig. 2 and col. 5, lines 26-40).

Vendryes fails to disclose providing the second coverage configuration includes transmitting a second beam of the first network that is narrower than the first beam and configured to provide coverage to at least one continuous use device of the group of devices, and providing coverage by a second network to a plurality of interval use devices of the group of devices.

However, in an analogous art, Gale discloses providing the second coverage configuration includes transmitting a second beam of the first network that is narrower than the first beam and configured to provide coverage to at least one continuous use device of the group

of devices, and providing coverage by a second network to a plurality of interval use devices of the group of devices (paragraph 35). Therefore, it would have been obvious to one of ordinary skill in the art at the time the invention was made to modify the method in Vendryes by incorporating these features taught in Gale for the purpose of freeing up system resources for increased data capacity.

Regarding claim 2, Vendryes discloses that the providing the second coverage configuration comprises determining a direction of transmission for the second beam based at least in part on a location of the at least one continuous use device (col. 4, lines 3-19).

Regarding claim 3, Vendryes discloses that the second beam of the first network is further configured to provide coverage to a second continuous use device of the group of devices (col. 4, lines 3-19).

Regarding claim 4, Vendryes discloses that a subsequent iteration of providing the second coverage configuration includes transmitting the second beam of the first network configured to provide coverage to a second continuous use device, and wherein the at least one continuous use device has transitioned to being an interval use device (col. 5, lines 41-52).

Regarding claim 5, Vendryes discloses that the first network and the second network are different network types (col. 4, lines 3-19).

Regarding claim 6, Vendryes discloses that the first network and the second network comprise at least one of the following: the first network is a Third Generation Mobile (3G) network and the second network is an Enhanced Data Rates for Global Evolution (EDGE) network, the first network is a Fourth Generation Mobile (4G) network and the second network is an Enhanced Data Rates for Global Evolution (EDGE) network, the first network is a Long

Term Evolution (LTE) network and the second network is an Enhanced Data Rates for Global Evolution (EDGE) network, the first network is an Evolution- Data Optimized (EV-DO) network and the second network is a Code Division Multiple Access (CDMA) network, the first network is a Fourth Generation Mobile (4G) network and the second network is a Third Generation Mobile (3G) network, the first network is a data network and the second network is a voice network, or the first network is a data network and the second network is a mixed voice and data network (col. 5, lines 41-52).

Regarding claim 7, Vendryes discloses that the first network and the second network are the same network types, and wherein the at least one continuous use device is allowed access to the second beam based on an admission control parameter (col. 4, lines 3-19).

Regarding claim 8, Vendryes discloses that the first coverage configuration is provided for a first time duration and the second coverage configuration is provided for a second time duration that is longer than the first time duration (col. 6, lines 30-41).

Regarding claim 9, Vendryes discloses that in the first time duration is in the range of about 2 to 5 minutes and the second time duration is in the range of about 2 to 10 seconds.

Regarding claim 10, Vendryes discloses that the at least one continuous use device is engaged in at least one of a voice call, a download, or a content streaming (col. 5, line 53 – col. 6, line 5).

Regarding claim 11, Vendryes discloses that the plurality of interval use devices defer and batch data updates during the second coverage configuration and receive the data updates during the first coverage configuration (col. 6, lines 42-67).

Regarding claim 12, Vendryes discloses that the second beam is narrower than the first beam in at least one of a horizontal plane or a vertical plane (col. 8, lines 20-45).

Regarding claim 13, Vendryes discloses that the first beam is about 12 degrees wide and the second beam is about 1 degree wide (col. 8, lines 20-45).

Claims 14-27 incorporate the limitations of claims 1-13, and are therefore rejected for the same reasons as claims 1-13.

Conclusion

Any inquiry concerning this communication or earlier communications from the examiner should be directed to Sam Bhattacharya whose telephone number is (571)272-7917. The examiner can normally be reached on Weekdays, 9-5:30.

If attempts to reach the examiner by telephone are unsuccessful, the examiner's supervisor, Lester Kincaid can be reached on (571) 272-7922. The fax phone number for the organization where this application or proceeding is assigned is 571-273-8300.

Information regarding the status of an application may be obtained from the Patent Application Information Retrieval (PAIR) system. Status information for published applications may be obtained from either Private PAIR or Public PAIR. Status information for unpublished applications is available through Private PAIR only. For more information about the PAIR system, see http://pair-direct.uspto.gov. Should you have questions on access to the Private PAIR system, contact the Electronic Business Center (EBC) at 866-217-9197 (toll-free). If you would like assistance from a USPTO Customer Service Representative or access to the automated information system, call 800-786-9199 (IN USA OR CANADA) or 571-272-1000.

sb

/Sam Bhattacharya/
Primary Examiner, Art Unit 2646

Notice of References Cited	Application/Control No. 13/321,792	Applicant(s)/Patent Under Reexamination KRUGLICK, EZEKIEL	
	Examiner Sam Bhattacharya	Art Unit 2646	Page 1 of 1

U.S. PATENT DOCUMENTS

*		Document Number Country Code-Number-Kind Code	Date MM-YYYY	Name	Classification
*	A	US-2011/0223925	09-2011	Gale et al.	455/450
*	B	US-6,546,259	04-2003	Vendryes, Robert S.	455/513
	C	US-			
	D	US-			
	E	US-			
	F	US-			
	G	US-			
	H	US-			
	I	US-			
	J	US-			
	K	US-			
	L	US-			
	M	US-			

FOREIGN PATENT DOCUMENTS

*		Document Number Country Code-Number-Kind Code	Date MM-YYYY	Country	Name	Classification
	N					
	O					
	P					
	Q					
	R					
	S					
	T					

NON-PATENT DOCUMENTS

*		Include as applicable: Author, Title Date, Publisher, Edition or Volume, Pertinent Pages)
	U	
	V	
	W	
	X	

*A copy of this reference is not being furnished with this Office action. (See MPEP § 707.05(a).)
Dates in MM-YYYY format are publication dates. Classifications may be US or foreign.

IPR2024-00135
Petitioners' Ex. 1002
Ex.1002.00171

Search Notes	Application/Control No.	Applicant(s)/Patent Under Reexamination
	13321792	KRUGLICK, EZEKIEL
	Examiner	**Art Unit**
	SAM BHATTACHARYA	2646

SEARCHED

Class	Subclass	Date	Examiner
455	422.1,427,450,562.1	11/15/2012	sb

SEARCH NOTES

Search Notes	Date	Examiner
East	11/15/2012	sb

INTERFERENCE SEARCH

Class	Subclass	Date	Examiner

IPR2024-00135
Petitioners' Ex. 1002
Ex.1002.00172

Doc code: IDS
Doc description: Information Disclosure Statement (IDS) Filed

PTO/SB/08a (01-10)
Approved for use through 07/31/2012. OMB 0651-0031
U.S. Patent and Trademark Office; U.S. DEPARTMENT OF COMMERCE
Under the Paperwork Reduction Act of 1995, no persons are required to respond to a collection of information unless it contains a valid OMB control number.

INFORMATION DISCLOSURE STATEMENT BY APPLICANT (**Not for submission under 37 CFR 1.99)**		
	Application Number	13/321,792
	Filing Date	2011-11-21
	First Named Inventor	Ezekiel Kruglick
	Art Unit	2646
	Examiner Name	Sam Bhattacharya
	Attorney Docket Number	006.P090

U.S.PATENTS						Remove
Examiner Initial*	Cite No	Patent Number	Kind Code[1]	Issue Date	Name of Patentee or Applicant of cited Document	Pages,Columns,Lines where Relevant Passages or Relevant Figures Appear
	1					
If you wish to add additional U.S. Patent citation information please click the Add button.						Add

U.S.PATENT APPLICATION PUBLICATIONS						Remove
Examiner Initial*	Cite No	Publication Number	Kind Code[1]	Publication Date	Name of Patentee or Applicant of cited Document	Pages,Columns,Lines where Relevant Passages or Relevant Figures Appear
	1	20060223573	A1	2006-10-05	JALALI	
	2	20020137538	A1	2002-09-26	CHEN et al.	
	3	20090296663	A1	2009-12-03	WILD	
	4	20070142045	A1	2007-06-21	SENARATH, et al.	
If you wish to add additional U.S. Published Application citation information please click the Add button.						Add

FOREIGN PATENT DOCUMENTS								Remove
Examiner Initial*	Cite No	Foreign Document Number[3]	Country Code[2] ¡	Kind Code[4]	Publication Date	Name of Patentee or Applicant of cited Document	Pages,Columns,Lines where Relevant Passages or Relevant Figures Appear	T[5]

EFS Web 2.1.17

ALL REFERENCES CONSIDERED EXCEPT WHERE LINED THROUGH. /S.B./

INFORMATION DISCLOSURE STATEMENT BY APPLICANT (Not for submission under 37 CFR 1.99)	Application Number	
	Filing Date	2011-11-21
	First Named Inventor	Ezekiel Kruglick
	Art Unit	
	Examiner Name	
	Attorney Docket Number	006.P090

	1							☐

If you wish to add additional Foreign Patent Document citation information please click the Add button Add

NON-PATENT LITERATURE DOCUMENTS Remove

Examiner Initials*	Cite No	Include name of the author (in CAPITAL LETTERS), title of the article (when appropriate), title of the item (book, magazine, journal, serial, symposium, catalog, etc), date, pages(s), volume-issue number(s), publisher, city and/or country where published.	T[5]
	1	AUSTRALIA PATENT OFFICE, International Search Report & Written Opinion of the International Searching Authority, prepared on October 31, 2011 and mailed on November 4, 2011, Australia.	☐
	2	WORTHAM, Jenna, Cellphones now used more for data than for calls, The New York Times, May 13, 2010, accessed on November 21, 2011 via http://www.nytimes.com/2010/05/14/technology/personaltech/14talk.html	☐

If you wish to add additional non-patent literature document citation information please click the Add button Add

EXAMINER SIGNATURE

Examiner Signature	/Sam Bhattacharya/	Date Considered	11/19/2012

*EXAMINER: Initial if reference considered, whether or not citation is in conformance with MPEP 609. Draw line through a citation if not in conformance and not considered. Include copy of this form with next communication to applicant.

[1] See Kind Codes of USPTO Patent Documents at www.USPTO.GOV or MPEP 901.04. [2] Enter office that issued the document, by the two-letter code (WIPO Standard ST.3). [3] For Japanese patent documents, the indication of the year of the reign of the Emperor must precede the serial number of the patent document. [4] Kind of document by the appropriate symbols as indicated on the document under WIPO Standard ST.16 if possible. [5] Applicant is to place a check mark here if English language translation is attached.

ALL REFERENCES CONSIDERED EXCEPT WHERE LINED THROUGH. /S.B./

INFORMATION DISCLOSURE STATEMENT BY APPLICANT (Not for submission under 37 CFR 1.99)	Application Number	
	Filing Date	2011-11-21
	First Named Inventor	Ezekiel Kruglick
	Art Unit	
	Examiner Name	
	Attorney Docket Number	006.P090

CERTIFICATION STATEMENT

Please see 37 CFR 1.97 and 1.98 to make the appropriate selection(s):

☐ That each item of information contained in the information disclosure statement was first cited in any communication from a foreign patent office in a counterpart foreign application not more than three months prior to the filing of the information disclosure statement. See 37 CFR 1.97(e)(1).

OR

☐ That no item of information contained in the information disclosure statement was cited in a communication from a foreign patent office in a counterpart foreign application, and, to the knowledge of the person signing the certification after making reasonable inquiry, no item of information contained in the information disclosure statement was known to any individual designated in 37 CFR 1.56(c) more than three months prior to the filing of the information disclosure statement. See 37 CFR 1.97(e)(2).

☐ See attached certification statement.

☐ The fee set forth in 37 CFR 1.17 (p) has been submitted herewith.

☒ A certification statement is not submitted herewith.

SIGNATURE

A signature of the applicant or representative is required in accordance with CFR 1.33, 10.18. Please see CFR 1.4(d) for the form of the signature.

Signature	/Blayne D. Green/	Date (YYYY-MM-DD)	2011-11-21
Name/Print	Blayne D. Green	Registration Number	56198

This collection of information is required by 37 CFR 1.97 and 1.98. The information is required to obtain or retain a benefit by the public which is to file (and by the USPTO to process) an application. Confidentiality is governed by 35 U.S.C. 122 and 37 CFR 1.14. This collection is estimated to take 1 hour to complete, including gathering, preparing and submitting the completed application form to the USPTO. Time will vary depending upon the individual case. Any comments on the amount of time you require to complete this form and/or suggestions for reducing this burden, should be sent to the Chief Information Officer, U.S. Patent and Trademark Office, U.S. Department of Commerce, P.O. Box 1450, Alexandria, VA 22313-1450. DO NOT SEND FEES OR COMPLETED FORMS TO THIS ADDRESS. **SEND TO: Commissioner for Patents, P.O. Box 1450, Alexandria, VA 22313-1450.**

ALL REFERENCES CONSIDERED EXCEPT WHERE LINED THROUGH. /S.B./

Privacy Act Statement

The Privacy Act of 1974 (P.L. 93-579) requires that you be given certain information in connection with your submission of the attached form related to a patent application or patent. Accordingly, pursuant to the requirements of the Act, please be advised that: (1) the general authority for the collection of this information is 35 U.S.C. 2(b)(2); (2) furnishing of the information solicited is voluntary; and (3) the principal purpose for which the information is used by the U.S. Patent and Trademark Office is to process and/or examine your submission related to a patent application or patent. If you do not furnish the requested information, the U.S. Patent and Trademark Office may not be able to process and/or examine your submission, which may result in termination of proceedings or abandonment of the application or expiration of the patent.

The information provided by you in this form will be subject to the following routine uses:

1. The information on this form will be treated confidentially to the extent allowed under the Freedom of Information Act (5 U.S.C. 552) and the Privacy Act (5 U.S.C. 552a). Records from this system of records may be disclosed to the Department of Justice to determine whether the Freedom of Information Act requires disclosure of these record s.

2. A record from this system of records may be disclosed, as a routine use, in the course of presenting evidence to a court, magistrate, or administrative tribunal, including disclosures to opposing counsel in the course of settlement negotiations.

3. A record in this system of records may be disclosed, as a routine use, to a Member of Congress submitting a request involving an individual, to whom the record pertains, when the individual has requested assistance from the Member with respect to the subject matter of the record.

4. A record in this system of records may be disclosed, as a routine use, to a contractor of the Agency having need for the information in order to perform a contract. Recipients of information shall be required to comply with the requirements of the Privacy Act of 1974, as amended, pursuant to 5 U.S.C. 552a(m).

5. A record related to an International Application filed under the Patent Cooperation Treaty in this system of records may be disclosed, as a routine use, to the International Bureau of the World Intellectual Property Organization, pursuant to the Patent Cooperation Treaty.

6. A record in this system of records may be disclosed, as a routine use, to another federal agency for purposes of National Security review (35 U.S.C. 181) and for review pursuant to the Atomic Energy Act (42 U.S.C. 218(c)).

7. A record from this system of records may be disclosed, as a routine use, to the Administrator, General Services, or his/her designee, during an inspection of records conducted by GSA as part of that agency's responsibility to recommend improvements in records management practices and programs, under authority of 44 U.S.C. 2904 and 2906. Such disclosure shall be made in accordance with the GSA regulations governing inspection of records for this purpose, and any other relevant (i.e., GSA or Commerce) directive. Such disclosure shall not be used to make determinations about individuals.

8. A record from this system of records may be disclosed, as a routine use, to the public after either publication of the application pursuant to 35 U.S.C. 122(b) or issuance of a patent pursuant to 35 U.S.C. 151. Further, a record may be disclosed, subject to the limitations of 37 CFR 1.14, as a routine use, to the public if the record was filed in an application which became abandoned or in which the proceedings were terminated and which application is referenced by either a published application, an application open to public inspections or an issued patent.

9. A record from this system of records may be disclosed, as a routine use, to a Federal, State, or local law enforcement agency, if the USPTO becomes aware of a violation or potential violation of law or regulation.

ALL REFERENCES CONSIDERED EXCEPT WHERE LINED THROUGH. /S.B./

EAST Search History

EAST Search History (Prior Art)

Ref #	Hits	Search Query	DBs	Default Operator	Plurals	Time Stamp
L1	510	coverage near9 beam near7 narrow$3	US-PGPUB; USPAT	OR	ON	2012/11/19 12:50
L2	1	cycl$4 near8 coverage near9 beam near7 narrow$3	US-PGPUB; USPAT	OR	ON	2012/11/19 12:50
L3	75	coverage near9 beam near7 narrower	US-PGPUB; USPAT	OR	ON	2012/11/19 12:53
L4	13129	(455/422.1,427,450,562.1).CCLS.	US-PGPUB; USPAT; USOCR	OR	OFF	2012/11/19 13:09

11/19/2012 1:09:31 PM
C:\Users\sbhattacharya\Documents\EAST\Workspaces\13321792.wsp

IPR2024-00135
Petitioners' Ex. 1002
Ex.1002.00177

UNITED STATES PATENT AND TRADEMARK OFFICE

UNITED STATES DEPARTMENT OF COMMERCE
United States Patent and Trademark Office
Address: COMMISSIONER FOR PATENTS
P.O. Box 1450
Alexandria, Virginia 22313-1450
www.uspto.gov

BIB DATA SHEET

CONFIRMATION NO. 5874

SERIAL NUMBER	FILING or 371(c) DATE	CLASS	GROUP ART UNIT	ATTORNEY DOCKET NO.
13/321,792	11/21/2011 RULE	455	2646	006.P090

APPLICANTS
Ezekiel Kruglick, Poway, CA;

**** CONTINUING DATA ****************************
This application is a 371 of PCT/US11/49003 08/24/2011

**** FOREIGN APPLICATIONS ***************************

**** IF REQUIRED, FOREIGN FILING LICENSE GRANTED ****
04/10/2012

Foreign Priority claimed	☐ Yes ☑ No		STATE OR COUNTRY	SHEETS DRAWINGS	TOTAL CLAIMS	INDEPENDENT CLAIMS
35 USC 119(a-d) conditions met	☐ Yes ☐ No	☐ Met after Allowance	CA	0	27	5
Verified and Acknowledged	/SAM BHATTACHARYA/ Examiner's Signature	sb Initials				

ADDRESS
OMIKRON IP LAW GROUP
16325 Boones Ferry Rd.
SUITE 204
LAKE OSWEGO, OR 97035
UNITED STATES

TITLE
NETWORK COVERAGE BY CYCLING THROUGH BEAM SHAPE COVERAGE CONFIGURATIONS

FILING FEE RECEIVED		
2040	FEES: Authority has been given in Paper No._____ to charge/credit DEPOSIT ACCOUNT No._____ for following:	☐ All Fees ☐ 1.16 Fees (Filing) ☐ 1.17 Fees (Processing Ext. of time) ☐ 1.18 Fees (Issue) ☐ Other _____ ☐ Credit

Index of Claims	Application/Control No.	Applicant(s)/Patent Under Reexamination
	13321792	KRUGLICK, EZEKIEL
	Examiner	**Art Unit**
	SAM BHATTACHARYA	2646

✓	Rejected	-	Cancelled	N	Non-Elected	A	Appeal
=	Allowed	÷	Restricted	I	Interference	O	Objected

☐ Claims renumbered in the same order as presented by applicant ☐ CPA ☐ T.D. ☐ R.1.47

CLAIM		DATE								
Final	Original	11/15/2012								
	1	✓								
	2	✓								
	3	✓								
	4	✓								
	5	✓								
	6	✓								
	7	✓								
	8	✓								
	9	✓								
	10	✓								
	11	✓								
	12	✓								
	13	✓								
	14	✓								
	15	✓								
	16	✓								
	17	✓								
	18	✓								
	19	✓								
	20	✓								
	21	✓								
	22	✓								
	23	✓								
	24	✓								
	25	✓								
	26	✓								
	27	✓								

IPR2024-00135
Petitioners' Ex. 1002
Ex.1002.00179

UNITED STATES PATENT AND TRADEMARK OFFICE

UNITED STATES DEPARTMENT OF COMMERCE
United States Patent and Trademark Office
Address: COMMISSIONER FOR PATENTS
P.O. Box 1450
Alexandria, Virginia 22313-1450
www.uspto.gov

APPLICATION NO.	FILING DATE	FIRST NAMED INVENTOR	ATTORNEY DOCKET NO.	CONFIRMATION NO.
13/321,792	11/21/2011	Ezekiel Kruglick	006.P090	5874

65638 7590 12/27/2012
OMIKRON IP LAW GROUP
16325 Boones Ferry Rd.
SUITE 204
LAKE OSWEGO, OR 97035

EXAMINER
BHATTACHARYA, SAM

ART UNIT	PAPER NUMBER
2646	

MAIL DATE	DELIVERY MODE
12/27/2012	PAPER

Please find below and/or attached an Office communication concerning this application or proceeding.

The time period for reply, if any, is set in the attached communication.

PTOL-90A (Rev. 04/07)

Applicant-Initiated Interview Summary	Application No.	Applicant(s)	
	13/321,792	KRUGLICK, EZEKIEL	
	Examiner	Art Unit	
	Sam Bhattacharya	2646	

All participants (applicant, applicant's representative, PTO personnel):

(1) *Sam Bhattacharya*. (3)_____.

(2) *Tom Richmond*. (4)_____.

Date of Interview: *20 December 2012*.

Type: ☒ Telephonic ☐ Video Conference
☐ Personal [copy given to: ☐ applicant ☐ applicant's representative]

Exhibit shown or demonstration conducted: ☐ Yes ☒ No.
If Yes, brief description: _____.

Issues Discussed ☐101 ☐112 ☐102 ☒103 ☐Others
(For each of the checked box(es) above, please describe below the issue and detailed description of the discussion)

Claim(s) discussed: *1*.

Identification of prior art discussed: *Vendreyes et al. (US 6,546,259) and Gale et al. (US 2011/0223925)*.

Substance of Interview
(For each issue discussed, provide a detailed description and indicate if agreement was reached. Some topics may include: identification or clarification of a reference or a portion thereof, claim interpretation, proposed amendments, arguments of any applied references etc...)

It was discussed that possible claim amendments could be filed which would require further search.

Applicant recordation instructions: The formal written reply to the last Office action must include the substance of the interview. (See MPEP section 713.04). If a reply to the last Office action has already been filed, applicant is given a non-extendable period of the longer of one month or thirty days from this interview date, or the mailing date of this interview summary form, whichever is later, to file a statement of the substance of the interview

Examiner recordation instructions: Examiners must summarize the substance of any interview of record. A complete and proper recordation of the substance of an interview should include the items listed in MPEP 713.04 for complete and proper recordation including the identification of the general thrust of each argument or issue discussed, a general indication of any other pertinent matters discussed regarding patentability and the general results or outcome of the interview, to include an indication as to whether or not agreement was reached on the issues raised.

☐ Attachment

/Sam Bhattacharya/
Primary Examiner, Art Unit 2646

IPR2024-00135
Petitioners' Ex. 1002
Ex.1002.00181

Summary of Record of Interview Requirements

Manual of Patent Examining Procedure (MPEP), Section 713.04, Substance of Interview Must be Made of Record
A complete written statement as to the substance of any face-to-face, video conference, or telephone interview with regard to an application must be made of record in the application whether or not an agreement with the examiner was reached at the interview.

Title 37 Code of Federal Regulations (CFR) § 1.133 Interviews
Paragraph (b)

In every instance where reconsideration is requested in view of an interview with an examiner, a complete written statement of the reasons presented at the interview as warranting favorable action must be filed by the applicant. An interview does not remove the necessity for reply to Office action as specified in §§ 1.111, 1.135. (35 U.S.C. 132)

37 CFR §1.2 Business to be transacted in writing.
All business with the Patent or Trademark Office should be transacted in writing. The personal attendance of applicants or their attorneys or agents at the Patent and Trademark Office is unnecessary. The action of the Patent and Trademark Office will be based exclusively on the written record in the Office. No attention will be paid to any alleged oral promise, stipulation, or understanding in relation to which there is disagreement or doubt.

The action of the Patent and Trademark Office cannot be based exclusively on the written record in the Office if that record is itself incomplete through the failure to record the substance of interviews.

It is the responsibility of the applicant or the attorney or agent to make the substance of an interview of record in the application file, unless the examiner indicates he or she will do so. It is the examiner's responsibility to see that such a record is made and to correct material inaccuracies which bear directly on the question of patentability.

Examiners must complete an Interview Summary Form for each interview held where a matter of substance has been discussed during the interview by checking the appropriate boxes and filling in the blanks. Discussions regarding only procedural matters, directed solely to restriction requirements for which interview recordation is otherwise provided for in Section 812.01 of the Manual of Patent Examining Procedure, or pointing out typographical errors or unreadable script in Office actions or the like, are excluded from the interview recordation procedures below. Where the substance of an interview is completely recorded in an Examiners Amendment, no separate Interview Summary Record is required.

The Interview Summary Form shall be given an appropriate Paper No., placed in the right hand portion of the file, and listed on the "Contents" section of the file wrapper. In a personal interview, a duplicate of the Form is given to the applicant (or attorney or agent) at the conclusion of the interview. In the case of a telephone or video-conference interview, the copy is mailed to the applicant's correspondence address either with or prior to the next official communication. If additional correspondence from the examiner is not likely before an allowance or if other circumstances dictate, the Form should be mailed promptly after the interview rather than with the next official communication.

The Form provides for recordation of the following information:
- Application Number (Series Code and Serial Number)
- Name of applicant
- Name of examiner
- Date of interview
- Type of interview (telephonic, video-conference, or personal)
- Name of participant(s) (applicant, attorney or agent, examiner, other PTO personnel, etc.)
- An indication whether or not an exhibit was shown or a demonstration conducted
- An identification of the specific prior art discussed
- An indication whether an agreement was reached and if so, a description of the general nature of the agreement (may be by attachment of a copy of amendments or claims agreed as being allowable). Note: Agreement as to allowability is tentative and does not restrict further action by the examiner to the contrary.
- The signature of the examiner who conducted the interview (if Form is not an attachment to a signed Office action)

It is desirable that the examiner orally remind the applicant of his or her obligation to record the substance of the interview of each case. It should be noted, however, that the Interview Summary Form will not normally be considered a complete and proper recordation of the interview unless it includes, or is supplemented by the applicant or the examiner to include, all of the applicable items required below concerning the substance of the interview.

A complete and proper recordation of the substance of any interview should include at least the following applicable items:
1) A brief description of the nature of any exhibit shown or any demonstration conducted,
2) an identification of the claims discussed,
3) an identification of the specific prior art discussed,
4) an identification of the principal proposed amendments of a substantive nature discussed, unless these are already described on the Interview Summary Form completed by the Examiner,
5) a brief identification of the general thrust of the principal arguments presented to the examiner,
   (The identification of arguments need not be lengthy or elaborate. A verbatim or highly detailed description of the arguments is not required. The identification of the arguments is sufficient if the general nature or thrust of the principal arguments made to the examiner can be understood in the context of the application file. Of course, the applicant may desire to emphasize and fully describe those arguments which he or she feels were or might be persuasive to the examiner.)
6) a general indication of any other pertinent matters discussed, and
7) if appropriate, the general results or outcome of the interview unless already described in the Interview Summary Form completed by the examiner.

Examiners are expected to carefully review the applicant's record of the substance of an interview. If the record is not complete and accurate, the examiner will give the applicant an extendable one month time period to correct the record.

Examiner to Check for Accuracy

If the claims are allowable for other reasons of record, the examiner should send a letter setting forth the examiner's version of the statement attributed to him or her. If the record is complete and accurate, the examiner should place the indication, "Interview Record OK" on the paper recording the substance of the interview along with the date and the examiner's initials.

IN THE UNITED STATES PATENT AND TRADEMARK OFFICE

Application No.:	13/321,792	Confirmation No.:	5874
Applicant:	Ezekiel Kruglick	Group Art Unit:	2646
Filing Date:	November 21, 2011	Examiner:	BHATTACHARYA, SAM
Docket No.:	006.P090		
Customer No.:	65638	**AMENDMENT AND RESPONSE TO OFFICE ACTION MAILED NOVEMBER 21, 2012**	
For:	NETWORK COVERAGE BY CYCLING THROUGH BEAM SHAPE COVERAGE CONFIGURATIONS	**SUBMITTED THROUGH EFS-WEB**	

Commissioner for Patents
P.O. Box 1450
Alexandria, VA 22313-1450

RESPONSE

Dear Sir:

This communication is being submitted in response to the Non-Final Office Action mailed on **November 21, 2012**. Applicants hereby request consideration of the following remarks.

Amendments to the claims begin on page 2.

Remarks begin on page 12.

Replacement drawings are attached.

Amendments to the Claims

Applicant wishes to amend the claims. This Listing of Claims will replace all prior versions, and listings, of claims in the subject application. Any amendments or cancelations of claims made herein are done without prejudice, waiver, or disclaimer of or to the claimed or disclosed subject matter. Furthermore, applicant, assignee, or both reserve the right to claim any of the amended or disclosed subject matter in a continuing or divisional application.

Listing of Claims:

1. (Currently Amended) A method for providing network coverage for a group of devices in an area comprising:

cycling over time through a coverage sequence that includes providing a first coverage configuration and providing a second coverage configuration, wherein:

providing the first coverage configuration includes transmitting a first beam of a first network that is configured to provide coverage for the group of devices; and

providing the second coverage configuration includes transmitting a second beam of the first network that is narrower than the first beam and configured to provide coverage to at least one continuous use device of the group of devices, <u>the at least one continuous use device being actively involved in a substantially continuous service with the network</u>, and

IPR2024-00135
Petitioners' Ex. 1002
Ex.1002.00184

providing coverage by a second network to a plurality of interval use devices of the group of devices.

2. (Original) The method of claim 1, wherein the providing the second coverage configuration comprises determining a direction of transmission for the second beam based at least in part on a location of the at least one continuous use device.

3. (Original) The method of claim 1, wherein the second beam of the first network is further configured to provide coverage to a second continuous use device of the group of devices.

4. (Original) The method of claim 1, wherein a subsequent iteration of providing the second coverage configuration includes transmitting the second beam of the first network configured to provide coverage to a second continuous use device, and wherein the at least one continuous use device has transitioned to being an interval use device.

5. (Original) The method of claim 1, wherein the first network and the second network are different network types.

6. (Original) The method of claim 5, wherein the first network and the second network comprise at least one of the following: the first network is a Third

IPR2024-00135
Petitioners' Ex. 1002
Ex.1002.00185

Generation Mobile (3G) network and the second network is an Enhanced Data Rates for Global Evolution (EDGE) network, the first network is a Fourth Generation Mobile (4G) network and the second network is an Enhanced Data Rates for Global Evolution (EDGE) network, the first network is a Long Term Evolution (LTE) network and the second network is an Enhanced Data Rates for Global Evolution (EDGE) network, the first network is an Evolution-Data Optimized (EV-DO) network and the second network is a Code Division Multiple Access (CDMA) network, the first network is a Fourth Generation Mobile (4G) network and the second network is a Third Generation Mobile (3G) network, the first network is a data network and the second network is a voice network, or the first network is a data network and the second network is a mixed voice and data network.

7. (Original) The method of claim 1, wherein the first network and the second network are the same network types, and wherein the at least one continuous use device is allowed access to the second beam based on an admission control parameter.

8. (Original) The method of claim 1, wherein the first coverage configuration is provided for a first time duration and the second coverage configuration is provided for a second time duration that is longer than the first time duration.

IPR2024-00135
Petitioners' Ex. 1002
Ex.1002.00186

9. (Original) The method of claim 8, wherein in the first time duration is in the range of about 2 to 5 minutes and the second time duration is in the range of about 2 to 10 seconds.

10. (Original) The method of claim 1, wherein the at least one continuous use device is engaged in at least one of a voice call, a download, or a content streaming.

11. (Original) The method of claim 1, wherein the plurality of interval use devices defer and batch data updates during the second coverage configuration and receive the data updates during the first coverage configuration.

12. (Original) The method of claim 1, wherein the second beam is narrower than the first beam in at least one of a horizontal plane or a vertical plane.

13. (Original) The method of claim 1, wherein the first beam is about 12 degrees wide and the second beam is about 1 degree wide.

14. (Currently Amended) A method for providing network coverage for a group of devices in an area comprising:

cycling over time through a coverage sequence that includes providing a first coverage configuration, providing a second coverage configuration, and providing a third coverage configuration, wherein:

IPR2024-00135
Petitioners' Ex. 1002
Ex.1002.00187

providing the first coverage configuration includes transmitting a first beam of a first network that is configured to provide coverage for a first set of the group of devices, and providing coverage by a second network to at least a second set of the group of devices;

providing the second coverage configuration includes transmitting a second beam of the first network that is configured to provide coverage for the second set of the group of devices, and providing coverage by the second network to at least the first set of the group of devices; and

providing the third coverage configuration includes transmitting a third beam of the first network that is narrower than the first beam and is configured to provide coverage to at least one continuous use device of the group of devices, the at least one continuous use device being actively involved in a substantially continuous service with the network, and providing coverage by the second network to at least a plurality of interval use devices of the group.

15. (Original) The method of claim 14, wherein the first network and the second network comprise at least one of the following: the first network is a Third Generation Mobile (3G) network and the second network is an Enhanced Data Rates for Global Evolution (EDGE) network, the first network is a Fourth Generation Mobile (4G) network and the second network is an Enhanced Data Rates for Global Evolution (EDGE) network, the first network is a Long Term Evolution (LTE) network and the second network is an Enhanced Data Rates for

IPR2024-00135
Petitioners' Ex. 1002
Ex.1002.00188

Global Evolution (EDGE) network, the first network is an Evolution-Data Optimized (EV-DO) network and the second network is a Code Division Multiple Access (CDMA) network, the first network is a Fourth Generation Mobile (4G) network and the second network is a Third Generation Mobile (3G) network, the first network is a data network and the second network is a voice network, or the first network is a data network and the second network is a mixed voice and data network.

16. (Original) The method of claim 14, wherein the third beam of the first network is further configured to provide coverage to a second continuous use device of the group of devices.

17. (Currently Amended) A machine readable non-transitory medium having stored therein instructions that, when executed, cause a device to provide a network coverage by:

cycling over time through a coverage sequence that includes providing a first coverage configuration and providing a second coverage configuration, wherein:

providing the first coverage configuration includes transmitting a first beam of a first network that is configured to provide coverage for the group of devices; and

providing the second coverage configuration includes transmitting a second beam of the first network that is narrower than the first beam and

IPR2024-00135
Petitioners' Ex. 1002
Ex.1002.00189

configured to provide coverage to at least one continuous use device of the group of devices, the at least one continuous use device being actively involved in a substantially continuous service with the network, and providing coverage by a second network to a plurality of interval use devices of the group of devices.

18. (Original) The machine readable non-transitory medium of claim 17, wherein the first network and the second network are the same network types, and wherein the at least one active device is allowed access to the second beam based on an admission control parameter.

19. (Original) The machine readable non-transitory medium of claim 17, wherein the first coverage configuration is provided for a first time duration and the second beam shape is provided for a second time duration that is shorter than the first time duration.

20. (Currently Amended) A device comprising:

a machine readable medium having stored therein instructions that, when executed, cause the device to provide network coverage by:

cycling over time through a coverage sequence that includes providing a first coverage configuration and providing a second coverage configuration, wherein:

IPR2024-00135
Petitioners' Ex. 1002
Ex.1002.00190

providing the first coverage configuration includes transmitting a first beam of a first network that is configured to provide coverage for the group of devices; and

providing the second coverage configuration includes transmitting a second beam of the first network that is narrower than the first beam and configured to provide coverage to at least one continuous use device of the group of devices, the at least one continuous use device being actively involved in a substantially continuous service with the network, and providing coverage by a second network to a plurality of interval use devices of the group of devices;

a processor coupled to the machine readable medium to execute the instructions; and

an adaptive antenna configured to transmit the first beam and the second beam.

21. (Original) The device of claim 20, wherein the first network and the second network are the same network types, the at least one active device is allowed access to the second beam based on an admission control parameter, and the adaptive antenna is further configured to transmit a third beam of the second network.

22. (Original) The device of claim 20, further comprising:

IPR2024-00135
Petitioners' Ex. 1002
Ex.1002.00191

a second antenna configured to provide a third beam of the second network.

23. (Original) A method for a device to receive data updates comprising:

cycling over time through an update sequence that includes:

deferring, during coverage by a first network, data updates for the device;

transmitting a data update request in response to coverage by a second network, wherein the second network is a more capable network than the first network; and

receiving, during the second coverage configuration, a data update.

24. (Original) The method of claim 23, wherein the device comprises at least one of a mobile phone, a smartphone, a laptop computer, a netbook device, a tablet device or a personal digital assistant.

25. (Original) The method of claim 23, wherein the update sequence further comprises:

batching the deferred data updates for the device.

26. (Original) The method of claim 23, wherein the data update includes at least one of an email update, an Really Simple Syndication (RSS) feed update, a social networking update, a software update, a map update, or a gaming update.

IPR2024-00135
Petitioners' Ex. 1002
Ex.1002.00192

27. (Original) The method of claim 23, wherein the first network and the second network comprise at least one of the following: the first network is a Third Generation Mobile (3G) network and the second network is an Enhanced Data Rates for Global Evolution (EDGE) network, the first network is a Fourth Generation Mobile (4G) network and the second network is an Enhanced Data Rates for Global Evolution (EDGE) network, the first network is a Long Term Evolution (LTE) network and the second network is an Enhanced Data Rates for Global Evolution (EDGE) network, the first network is an Evolution-Data Optimized (EV-DO) network and the second network is a Code Division Multiple Access (CDMA) network, the first network is a Fourth Generation Mobile (4G) network and the second network is a Third Generation Mobile (3G) network, the first network is a data network and the second network is a voice network, or the first network is a data network and the second network is a mixed voice and data network.

IPR2024-00135
Petitioners' Ex. 1002
Ex.1002.00193

REMARKS

In the Claims:

Claims 1-27 are pending in this application.

Claims 1, 14, 17, and 20 are currently amended.

No new matter has been added.

In the Drawings:

FIG. 7 has been amended to fix a typo, amending the text "Memory Controller (715)". No new matter has been added.

Examiner Interview of Oct. 10, 2012:

Applicant would like to thank Examiner Bhatacharya for conducting the telephonic interview of Dec. 20, 2012, in which we discussed the Examiner's interpretation of claim 1 and the contents of cited art. In particular, we discussed whether the cited art "cycle[s] over time through a coverage sequence" as recited in claim 1 and we discussed whether the art discloses "continuous use device" as recited in claim 1. Examiner Bhatacharya indicated that the proposed amendments as made herein may require a new search prior to allowance.

Remarks:

Claims 1-27 were rejected under 35 U.S.C. §103(a) as being unpatentable over US 6,546,259 to Vendryes, hereinafter referenced as "Vendryes", in view of US 2011/0223925 by Gale et al., hereinafter referenced as "Gale".

IPR2024-00135
Petitioners' Ex. 1002
Ex.1002.00194

Vendryes is not enabling art with respect to the claimed subject matter. MPEP §§ 2141.01 and 2121.01 state that cited art available under 35 U.S.C. §103 must meet the enablement requirement of 35 U.S.C. §102, thus the cited art must provide an enabling disclosure of the claimed subject matter. These sections of the MPEP go on to state that the mere naming or description of the subject matter is insufficient; rather, the cited art must demonstrate that the public was in possession of the claimed subject matter before the date of invention. In other words, the cited art must describe the claimed subject matter in such detail as to enable one of ordinary skill in the art to make the claimed subject matter without undue experimentation.

As admitted in the Office Action, "Vendryes fails to disclose providing the second coverage configuration includes transmitting a second beam of the first network that is narrower than the first beam and configured to provide coverage to at least one continuous use device of the group of devices, and providing coverage by a second network to a plurality of interval use devices of the group of devices". (See Office Action of Nov. 21, at pg. 2, bullet 2). Because Vendryes fails to disclose the second coverage configuration, Vendryes cannot perform at least the following portion of claim 1, "cycling over time through a coverage sequence that includes providing a first coverage configuration **and providing a second coverage configuration**". (emphasis added). Vendryes does not describe the claimed subject matter cited and furthermore does not describe the claimed subject matter in such detail as to enable one of ordinary skill in the art

to make the claimed subject matter without undue experimentation. Therefore, Vendryes is not enabling art with respect to the claimed subject matter.

Furthermore, assuming arguendo and solely for the sake of furthering prosecution that Vendryes is enabling art, amended independent claim 1 is still patentable over Vendryes as described herein. Independent claim 1 has been amended to recite, in part, "cycling over time through a coverage sequence that includes providing a first coverage configuration and providing a second coverage configuration, wherein: providing the first coverage configuration includes transmitting a first beam of a first network that is configured to provide coverage for the group of devices; and providing the second coverage configuration includes transmitting a second beam of the first network that is narrower than the first beam and configured to provide coverage to at least one continuous use device of the group of devices, the at least one continuous use device being actively involved in a substantially continuous service with the network, and providing coverage by a second network to a plurality of interval use devices of the group of devices". In general, Vendryes discloses that "A processor determines which of the first and second antennas, and any additional antennas, has the higher signal strength. A transmitter, located on the second station, is adapted to transmit telemetry signals over the antenna that received the unique RF signal that had the higher signal strength." (Vendryes at C2:L27-32). In particular, Vendryes discloses "FIG. 2 shows a notional diagram of a launch vehicle cycling through a six-antenna-element narrow-beam transmit coverage pattern". (Vendryes at C5:L26-28). Vendryes does not disclose or

IPR2024-00135
Petitioners' Ex. 1002
Ex.1002.00196

suggest at least the above-quoted portion of claim 1. Therefore, amended independent claim 1 is patentable over Vendryes.

Gale does not cure the deficiencies of Vendryes. In general, Gale discloses “methods and apparatus that provide backhaul by using the cellular wireless resource within a cellular wireless system”. (Gale at [0033]). In particular, Gale discloses “The radiation pattern of the beam 17 can be narrower in azimuth than that of the beam 11a used for access, since it is not necessary to give coverage over the breadth of a given sector”. (Gale at [0035]). Gale does not disclose or suggest at least the following portion of amended claim 1, “cycling over time through a coverage sequence that includes providing a first coverage configuration and providing a second coverage configuration, wherein: providing the first coverage configuration includes transmitting a first beam of a first network that is configured to provide coverage for the group of devices; and providing the second coverage configuration includes transmitting a second beam of the first network that is narrower than the first beam and configured to provide coverage to at least one continuous use device of the group of devices, the at least one continuous use device being actively involved in a substantially continuous service with the network, and providing coverage by a second network to a plurality of interval use devices of the group of devices”. In contrast, Gale discloses that relay node base station 3 is for provision of network service and not for “substantially continuous service with the network”. Therefore, Gale does not cure the deficiencies of Vendryes with respect to both the sufficiency of Vendryes as enabling art as well as the sufficiency of Vendryes to disclose or

suggest the above-cited portion of claim 1. Therefore, amended independent claim 1 is patentable over Vendryes and Gale.

Claims 2-13 depend from independent claim 1 and are patentable over Vendryes and Gale based at least in part on their dependency.

Independent claims 14, 17, and 20 have been amended to incorporate similar subject matter as independent claim 1, and are patentable over Vendryes and Gale for the reasons specified above in the section for claim 1.

Claims 15-16, 18-19, and 21-22 depend from amended independent claims 14, 17, and 20, respectively, and are patentable over Vendryes and Gale based at least in part on their dependency.

Independent claim 23 was rejected with the following statement, "Claims 14-27 incorporate the limitations of claims 1-13, and are therefore rejected for the same reasons as claims 1-13". (Office Action of Nov. 21, 2012, at pg. 5). Applicant acknowledges that claim 11 contains somewhat similar subject matter, stating in part "the plurality of interval use devices defer and batch data updates", however, the scope and content of claim 11 is different than the scope and content of claim 23. In particular, claim 23 recites, in part, "transmitting a data update request in response to coverage by a second network, wherein the second network is a more capable network than the first network, wherein the second network is a more capable network than the first network". None of the other claim rejections contain remarks pertaining to this claimed subject matter.

MPEP § 2143 states that "[t]he key to supporting any rejection under 35 U.S.C. 103 is the **clear articulation** of the reason(s) why the claimed invention

IPR2024-00135
Petitioners' Ex. 1002
Ex.1002.00198

would have been obvious. The Supreme Court in KSR noted that the analysis supporting a rejection under 35 U.S.C. 103 should be **made explicit**" (emphasis added). According to MPEP § 2143, rationales that may support a conclusion of obviousness include:

(A) Combining prior art elements according to known methods to yield predictable results;

(B) Simple substitution of one known element for another to obtain predictable results;

(C) Use of known technique to improve similar devices (methods, or products) in the same way;

(D) Applying a known technique to a known device (method, or product) ready for improvement to yield predictable results;

(E) "Obvious to try" - choosing from a finite number of identified, predictable solutions, with a reasonable expectation of success;

(F) Known work in one field of endeavor may prompt variations of it for use in either the same field or a different one based on design incentives or other market forces if the variations are predictable to one of ordinary skill in the art;

(G) Some teaching, suggestion, or motivation in the prior art that would have led one of ordinary skill to modify the prior art reference or to combine prior art reference teachings to arrive at the claimed invention.

While the above is not an all-inclusive list, the MPEP requires that some rationale be provided in order to support a conclusion of obviousness. In this case, not only has the Office Action failed to present one or more of the above-

listed rationales, the Office Action has failed to present **any** type of rationale. In particular, the rejection lacks a clear articulation of the reasons why these features would allegedly have been obvious and, therefore, the rejection cannot be supported per the requirements set forth by the United States Supreme Court in the KSR decision. Thus, it is respectfully submitted that the rejection is improper and must be withdrawn. Further, because the Office Action failed to establish a prima facie case of obviousness, any rejection in a subsequent Office Action providing adequate reasoning(s) would be presented for the first time on the record, and, as such, a subsequent Office Action cannot be made final.

Claims 24-27 depend from independent claim 23, and are patentable over Vendryes and Gale based at least in part on their dependency.

IPR2024-00135
Petitioners' Ex. 1002
Ex.1002.00200

Conclusion:

Applicant respectfully submits that claims 1-27 are patentable, and accordingly, the application is now in condition for allowance. Early issuance of the Notice of Allowance is respectfully requested.

The Examiner is invited to call Tom Richmond at (503) 333-0212 if there remains any issue with allowance of this case.

Respectfully submitted,

Dated: February 15, 2013

/Thomas C. Richmond/
Thomas C. Richmond
Registration No. 68,271

Omikron IP Law Group
16325 Boones Ferry Rd., Suite 204
Lake Oswego OR 97035

IPR2024-00135
Petitioners' Ex. 1002
Ex.1002.00201

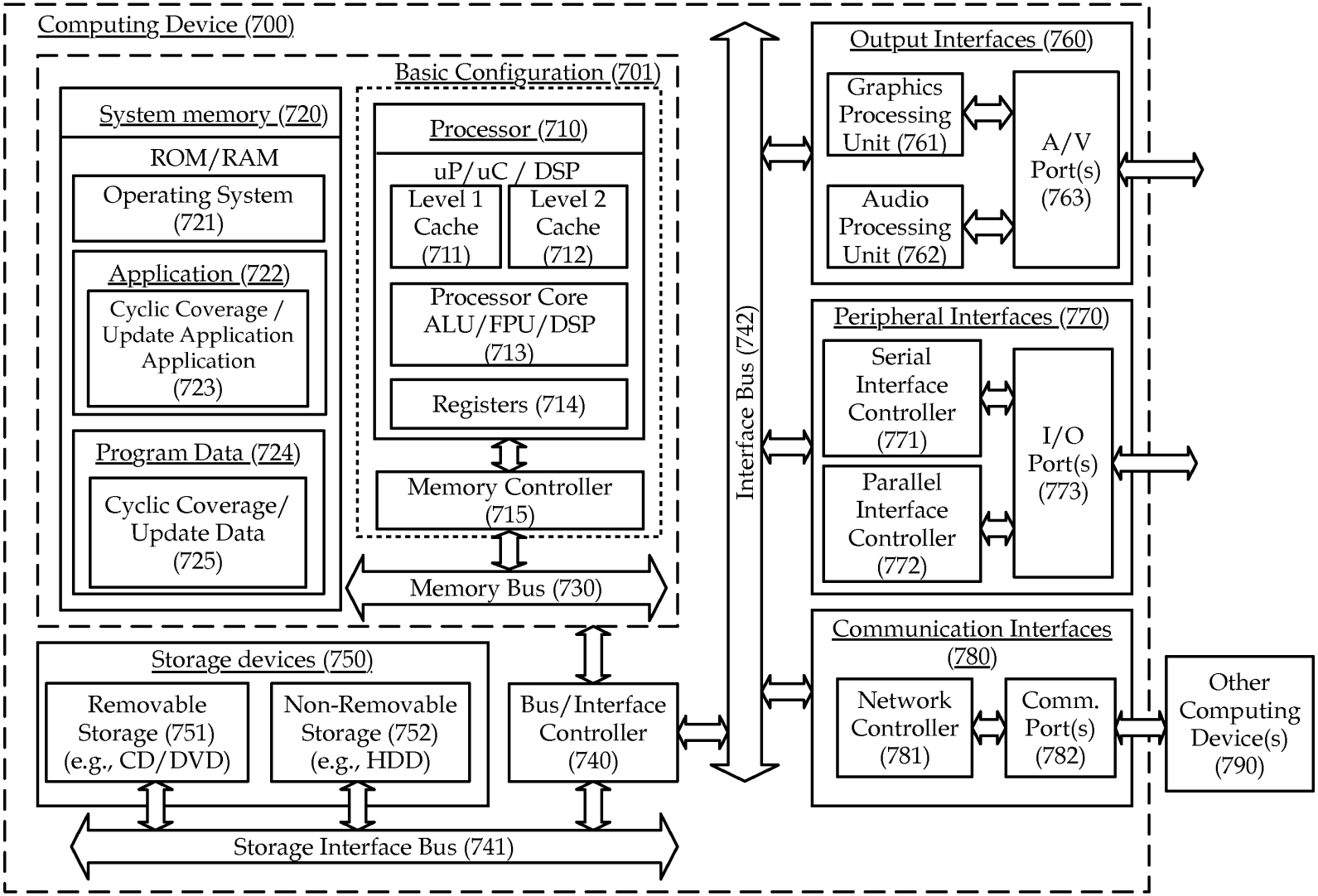

FIG. 7

IPR2024-00135
Petitioners' Ex. 1002
Ex.1002.00202

Electronic Acknowledgement Receipt

EFS ID:	14974128
Application Number:	13321792
International Application Number:	
Confirmation Number:	5874
Title of Invention:	NETWORK COVERAGE BY CYCLING THROUGH BEAM SHAPE COVERAGE CONFIGURATIONS
First Named Inventor/Applicant Name:	Ezekiel Kruglick
Customer Number:	65638
Filer:	Thomas C Richmond/Dana Montgomery
Filer Authorized By:	Thomas C Richmond
Attorney Docket Number:	006.P090
Receipt Date:	15-FEB-2013
Filing Date:	21-NOV-2011
Time Stamp:	16:03:38
Application Type:	U.S. National Stage under 35 USC 371

Payment information:

Submitted with Payment	no

File Listing:

Document Number	Document Description	File Name	File Size(Bytes)/ Message Digest	Multi Part /.zip	Pages (if appl.)
1	Applicant Arguments/Remarks Made in an Amendment	Response_to_First_OA_006_P090.pdf	123077 a8dcc508f6a49faaa7e27429da7e0d84c16e64d5	no	19

Warnings:

Information:

2	Drawings-only black and white line drawings	Replacement_Fig_7_006_P090.pdf	38839 c350771082e110ca5a321dc48033c2e8e0af6ab7	no	1
Warnings:					
Information:					
			Total Files Size (in bytes):	161916	

This Acknowledgement Receipt evidences receipt on the noted date by the USPTO of the indicated documents, characterized by the applicant, and including page counts, where applicable. It serves as evidence of receipt similar to a Post Card, as described in MPEP 503.

<u>New Applications Under 35 U.S.C. 111</u>
If a new application is being filed and the application includes the necessary components for a filing date (see 37 CFR 1.53(b)-(d) and MPEP 506), a Filing Receipt (37 CFR 1.54) will be issued in due course and the date shown on this Acknowledgement Receipt will establish the filing date of the application.

<u>National Stage of an International Application under 35 U.S.C. 371</u>
If a timely submission to enter the national stage of an international application is compliant with the conditions of 35 U.S.C. 371 and other applicable requirements a Form PCT/DO/EO/903 indicating acceptance of the application as a national stage submission under 35 U.S.C. 371 will be issued in addition to the Filing Receipt, in due course.

<u>New International Application Filed with the USPTO as a Receiving Office</u>
If a new international application is being filed and the international application includes the necessary components for an international filing date (see PCT Article 11 and MPEP 1810), a Notification of the International Application Number and of the International Filing Date (Form PCT/RO/105) will be issued in due course, subject to prescriptions concerning national security, and the date shown on this Acknowledgement Receipt will establish the international filing date of the application.

PTO/SB/06 (07-06)
Approved for use through 1/31/2007. OMB 0651-0032
U.S. Patent and Trademark Office; U.S. DEPARTMENT OF COMMERCE
Under the Paperwork Reduction Act of 1995, no persons are required to respond to a collection of information unless it displays a valid OMB control number.

PATENT APPLICATION FEE DETERMINATION RECORD

Substitute for Form PTO-875

Application or Docket Number	Filing Date	
13/321,792	11/21/2011	☐ To be Mailed

APPLICATION AS FILED – PART I

FOR	(Column 1) NUMBER FILED	(Column 2) NUMBER EXTRA	SMALL ENTITY ☐ RATE ($)	SMALL ENTITY FEE ($)	OR	OTHER THAN SMALL ENTITY RATE ($)	OTHER THAN SMALL ENTITY FEE ($)
☐ BASIC FEE (37 CFR 1.16(a), (b), or (c))	N/A	N/A	N/A			N/A	
☐ SEARCH FEE (37 CFR 1.16(k), (i), or (m))	N/A	N/A	N/A			N/A	
☐ EXAMINATION FEE (37 CFR 1.16(o), (p), or (q))	N/A	N/A	N/A			N/A	
TOTAL CLAIMS (37 CFR 1.16(i))	minus 20 =	*	X $ =		OR	X $ =	
INDEPENDENT CLAIMS (37 CFR 1.16(h))	minus 3 =	*	X $ =			X $ =	
☐ APPLICATION SIZE FEE (37 CFR 1.16(s))	If the specification and drawings exceed 100 sheets of paper, the application size fee due is $250 ($125 for small entity) for each additional 50 sheets or fraction thereof. See 35 U.S.C. 41(a)(1)(G) and 37 CFR 1.16(s).						
☐ MULTIPLE DEPENDENT CLAIM PRESENT (37 CFR 1.16(j))							
* If the difference in column 1 is less than zero, enter "0" in column 2.			TOTAL			TOTAL	

APPLICATION AS AMENDED – PART II

AMENDMENT 02/15/2013

	(Column 1) CLAIMS REMAINING AFTER AMENDMENT		(Column 2) HIGHEST NUMBER PREVIOUSLY PAID FOR	(Column 3) PRESENT EXTRA	SMALL ENTITY RATE ($)	SMALL ENTITY ADDITIONAL FEE ($)	OR	OTHER THAN SMALL ENTITY RATE ($)	OTHER THAN SMALL ENTITY ADDITIONAL FEE ($)
Total (37 CFR 1.16(i))	* 27	Minus	** 27	= 0	X $ =		OR	X $62=	0
Independent (37 CFR 1.16(h))	* 5	Minus	***5	= 0	X $ =		OR	X $250=	0
☐ Application Size Fee (37 CFR 1.16(s))									
☐ FIRST PRESENTATION OF MULTIPLE DEPENDENT CLAIM (37 CFR 1.16(j))							OR		
					TOTAL ADD'L FEE		OR	TOTAL ADD'L FEE	0

AMENDMENT

	(Column 1) CLAIMS REMAINING AFTER AMENDMENT		(Column 2) HIGHEST NUMBER PREVIOUSLY PAID FOR	(Column 3) PRESENT EXTRA	RATE ($)	ADDITIONAL FEE ($)	OR	RATE ($)	ADDITIONAL FEE ($)
Total (37 CFR 1.16(i))	*	Minus	**	=	X $ =		OR	X $ =	
Independent (37 CFR 1.16(h))	*	Minus	***	=	X $ =		OR	X $ =	
☐ Application Size Fee (37 CFR 1.16(s))									
☐ FIRST PRESENTATION OF MULTIPLE DEPENDENT CLAIM (37 CFR 1.16(j))							OR		
					TOTAL ADD'L FEE		OR	TOTAL ADD'L FEE	

* If the entry in column 1 is less than the entry in column 2, write "0" in column 3.
** If the "Highest Number Previously Paid For" IN THIS SPACE is less than 20, enter "20".
*** If the "Highest Number Previously Paid For" IN THIS SPACE is less than 3, enter "3".
The "Highest Number Previously Paid For" (Total or Independent) is the highest number found in the appropriate box in column 1.

Legal Instrument Examiner:
/TONYA MCBRIDE/

This collection of information is required by 37 CFR 1.16. The information is required to obtain or retain a benefit by the public which is to file (and by the USPTO to process) an application. Confidentiality is governed by 35 U.S.C. 122 and 37 CFR 1.14. This collection is estimated to take 12 minutes to complete, including gathering, preparing, and submitting the completed application form to the USPTO. Time will vary depending upon the individual case. Any comments on the amount of time you require to complete this form and/or suggestions for reducing this burden, should be sent to the Chief Information Officer, U.S. Patent and Trademark Office, U.S. Department of Commerce, P.O. Box 1450, Alexandria, VA 22313-1450. DO NOT SEND FEES OR COMPLETED FORMS TO THIS ADDRESS. **SEND TO: Commissioner for Patents, P.O. Box 1450, Alexandria, VA 22313-1450.**
If you need assistance in completing the form, call 1-800-PTO-9199 and select option 2.

UNITED STATES PATENT AND TRADEMARK OFFICE

UNITED STATES DEPARTMENT OF COMMERCE
United States Patent and Trademark Office
Address: COMMISSIONER FOR PATENTS
P.O. Box 1450
Alexandria, Virginia 22313-1450
www.uspto.gov

APPLICATION NUMBER	FILING OR 371(C) DATE	FIRST NAMED APPLICANT	ATTY. DOCKET NO./TITLE
13/321,792	11/21/2011	Ezekiel Kruglick	006.P090

CONFIRMATION NO. 5874

PUBLICATION NOTICE

OC000000059581285

65638
OMIKRON IP LAW GROUP
5895 Jean Road
LAKE OSWEGO, OR 97035

Title:NETWORK COVERAGE BY CYCLING THROUGH BEAM SHAPE COVERAGE CONFIGURATIONS

Publication No.US-2013-0053018-A1
Publication Date:02/28/2013

NOTICE OF PUBLICATION OF APPLICATION

The above-identified application will be electronically published as a patent application publication pursuant to 37 CFR 1.211, et seq. The patent application publication number and publication date are set forth above.

The publication may be accessed through the USPTO's publically available Searchable Databases via the Internet at www.uspto.gov. The direct link to access the publication is currently http://www.uspto.gov/patft/.

The publication process established by the Office does not provide for mailing a copy of the publication to applicant. A copy of the publication may be obtained from the Office upon payment of the appropriate fee set forth in 37 CFR 1.19(a)(1). Orders for copies of patent application publications are handled by the USPTO's Office of Public Records. The Office of Public Records can be reached by telephone at (703) 308-9726 or (800) 972-6382, by facsimile at (703) 305-8759, by mail addressed to the United States Patent and Trademark Office, Office of Public Records, Alexandria, VA 22313-1450 or via the Internet.

In addition, information on the status of the application, including the mailing date of Office actions and the dates of receipt of correspondence filed in the Office, may also be accessed via the Internet through the Patent Electronic Business Center at www.uspto.gov using the public side of the Patent Application Information and Retrieval (PAIR) system. The direct link to access this status information is currently http://pair.uspto.gov/. Prior to publication, such status information is confidential and may only be obtained by applicant using the private side of PAIR.

Further assistance in electronically accessing the publication, or about PAIR, is available by calling the Patent Electronic Business Center at 1-866-217-9197.

Office of Data Managment, Application Assistance Unit (571) 272-4000, or (571) 272-4200, or 1-888-786-0101

IPR2024-00135
Petitioners' Ex. 1002
Ex.1002.00206

UNITED STATES PATENT AND TRADEMARK OFFICE

UNITED STATES DEPARTMENT OF COMMERCE
United States Patent and Trademark Office
Address: COMMISSIONER FOR PATENTS
P.O. Box 1450
Alexandria, Virginia 22313-1450
www.uspto.gov

NOTICE OF ALLOWANCE AND FEE(S) DUE

65638 7590 06/06/2013
OMIKRON IP LAW GROUP
5895 Jean Road
LAKE OSWEGO, OR 97035

EXAMINER
BHATTACHARYA, SAM

ART UNIT	PAPER NUMBER
2646	

DATE MAILED: 06/06/2013

APPLICATION NO.	FILING DATE	FIRST NAMED INVENTOR	ATTORNEY DOCKET NO.	CONFIRMATION NO.
13/321,792	11/21/2011	Ezekiel Kruglick	006.P090	5874

TITLE OF INVENTION: NETWORK COVERAGE BY CYCLING THROUGH BEAM SHAPE COVERAGE CONFIGURATIONS

APPLN. TYPE	ENTITY STATUS	ISSUE FEE DUE	PUBLICATION FEE DUE	PREV. PAID ISSUE FEE	TOTAL FEE(S) DUE	DATE DUE
nonprovisional	UNDISCOUNTED	$1780	$300	$0	$2080	09/06/2013

THE APPLICATION IDENTIFIED ABOVE HAS BEEN EXAMINED AND IS ALLOWED FOR ISSUANCE AS A PATENT. PROSECUTION ON THE MERITS IS CLOSED. THIS NOTICE OF ALLOWANCE IS NOT A GRANT OF PATENT RIGHTS. THIS APPLICATION IS SUBJECT TO WITHDRAWAL FROM ISSUE AT THE INITIATIVE OF THE OFFICE OR UPON PETITION BY THE APPLICANT. SEE 37 CFR 1.313 AND MPEP 1308.

THE ISSUE FEE AND PUBLICATION FEE (IF REQUIRED) MUST BE PAID WITHIN THREE MONTHS FROM THE MAILING DATE OF THIS NOTICE OR THIS APPLICATION SHALL BE REGARDED AS ABANDONED. THIS STATUTORY PERIOD CANNOT BE EXTENDED. SEE 35 U.S.C. 151. THE ISSUE FEE DUE INDICATED ABOVE DOES NOT REFLECT A CREDIT FOR ANY PREVIOUSLY PAID ISSUE FEE IN THIS APPLICATION. IF AN ISSUE FEE HAS PREVIOUSLY BEEN PAID IN THIS APPLICATION (AS SHOWN ABOVE), THE RETURN OF PART B OF THIS FORM WILL BE CONSIDERED A REQUEST TO REAPPLY THE PREVIOUSLY PAID ISSUE FEE TOWARD THE ISSUE FEE NOW DUE.

HOW TO REPLY TO THIS NOTICE:

I. Review the ENTITY STATUS shown above. If the ENTITY STATUS is shown as SMALL or MICRO, verify whether entitlement to that entity status still applies.

If the ENTITY STATUS is the same as shown above, pay the TOTAL FEE(S) DUE shown above.

If the ENTITY STATUS is changed from that shown above, on PART B - FEE(S) TRANSMITTAL, complete section number 5 titled "Change in Entity Status (from status indicated above)".

For purposes of this notice, small entity fees are 1/2 the amount of undiscounted fees, and micro entity fees are 1/2 the amount of small entity fees.

II. PART B - FEE(S) TRANSMITTAL, or its equivalent, must be completed and returned to the United States Patent and Trademark Office (USPTO) with your ISSUE FEE and PUBLICATION FEE (if required). If you are charging the fee(s) to your deposit account, section "4b" of Part B - Fee(s) Transmittal should be completed and an extra copy of the form should be submitted. If an equivalent of Part B is filed, a request to reapply a previously paid issue fee must be clearly made, and delays in processing may occur due to the difficulty in recognizing the paper as an equivalent of Part B.

III. All communications regarding this application must give the application number. Please direct all communications prior to issuance to Mail Stop ISSUE FEE unless advised to the contrary.

IMPORTANT REMINDER: Utility patents issuing on applications filed on or after Dec. 12, 1980 may require payment of maintenance fees. It is patentee's responsibility to ensure timely payment of maintenance fees when due.

PTOL-85 (Rev. 02/11)

IPR2024-00135
Petitioners' Ex. 1002
Ex.1002.00207

PART B - FEE(S) TRANSMITTAL

Complete and send this form, together with applicable fee(s), to: Mail **Mail Stop ISSUE FEE**
Commissioner for Patents
P.O. Box 1450
Alexandria, Virginia 22313-1450
or Fax (571)-273-2885

INSTRUCTIONS: This form should be used for transmitting the ISSUE FEE and PUBLICATION FEE (if required). Blocks 1 through 5 should be completed where appropriate. All further correspondence including the Patent, advance orders and notification of maintenance fees will be mailed to the current correspondence address as indicated unless corrected below or directed otherwise in Block 1, by (a) specifying a new correspondence address; and/or (b) indicating a separate "FEE ADDRESS" for maintenance fee notifications.

CURRENT CORRESPONDENCE ADDRESS (Note: Use Block 1 for any change of address)

65638 7590 06/06/2013
OMIKRON IP LAW GROUP
5895 Jean Road
LAKE OSWEGO, OR 97035

Note: A certificate of mailing can only be used for domestic mailings of the Fee(s) Transmittal. This certificate cannot be used for any other accompanying papers. Each additional paper, such as an assignment or formal drawing, must have its own certificate of mailing or transmission.

Certificate of Mailing or Transmission
I hereby certify that this Fee(s) Transmittal is being deposited with the United States Postal Service with sufficient postage for first class mail in an envelope addressed to the Mail Stop ISSUE FEE address above, or being facsimile transmitted to the USPTO (571) 273-2885, on the date indicated below.

(Depositor's name)
(Signature)
(Date)

APPLICATION NO.	FILING DATE	FIRST NAMED INVENTOR	ATTORNEY DOCKET NO.	CONFIRMATION NO.
13/321,792	11/21/2011	Ezekiel Kruglick	006.P090	5874

TITLE OF INVENTION: NETWORK COVERAGE BY CYCLING THROUGH BEAM SHAPE COVERAGE CONFIGURATIONS

APPLN. TYPE	ENTITY STATUS	ISSUE FEE DUE	PUBLICATION FEE DUE	PREV. PAID ISSUE FEE	TOTAL FEE(S) DUE	DATE DUE
nonprovisional	UNDISCOUNTED	$1780	$300	$0	$2080	09/06/2013

EXAMINER	ART UNIT	CLASS-SUBCLASS
BHATTACHARYA, SAM	2646	455-422100

1. Change of correspondence address or indication of "Fee Address" (37 CFR 1.363).
- ❑ Change of correspondence address (or Change of Correspondence Address form PTO/SB/122) attached.
- ❑ "Fee Address" indication (or "Fee Address" Indication form PTO/SB/47; Rev 03-02 or more recent) attached. **Use of a Customer Number is required.**

2. For printing on the patent front page, list
(1) the names of up to 3 registered patent attorneys or agents OR, alternatively,
(2) the name of a single firm (having as a member a registered attorney or agent) and the names of up to 2 registered patent attorneys or agents. If no name is listed, no name will be printed.

1_____
2_____
3_____

3. ASSIGNEE NAME AND RESIDENCE DATA TO BE PRINTED ON THE PATENT (print or type)

PLEASE NOTE: Unless an assignee is identified below, no assignee data will appear on the patent. If an assignee is identified below, the document has been filed for recordation as set forth in 37 CFR 3.11. Completion of this form is NOT a substitute for filing an assignment.

(A) NAME OF ASSIGNEE (B) RESIDENCE: (CITY and STATE OR COUNTRY)

Please check the appropriate assignee category or categories (will not be printed on the patent) : ❑ Individual ❑ Corporation or other private group entity ❑ Government

4a. The following fee(s) are submitted:
- ❑ Issue Fee
- ❑ Publication Fee (No small entity discount permitted)
- ❑ Advance Order - # of Copies _____

4b. Payment of Fee(s): **(Please first reapply any previously paid issue fee shown above)**
- ❑ A check is enclosed.
- ❑ Payment by credit card. Form PTO-2038 is attached.
- ❑ The Director is hereby authorized to charge the required fee(s), any deficiency, or credit any overpayment, to Deposit Account Number _____ (enclose an extra copy of this form).

PTOL-85 (Rev. 02/11)

IPR2024-00135
Petitioners' Ex. 1002
Ex.1002.00208

5. **Change in Entity Status** (from status indicated above)

❑ Applicant certifying micro entity status. See 37 CFR 1.29	NOTE: Absent a valid certification of Micro Entity Status (see form PTO/SB/15A and 15B), issue fee payment in the micro entity amount will not be accepted at the risk of application abandonment.
❑ Applicant asserting small entity status. See 37 CFR 1.27	NOTE: If the application was previously under micro entity status, checking this box will be taken to be a notification of loss of entitlement to micro entity status.
❑ Applicant changing to regular undiscounted fee status.	NOTE: Checking this box will be taken to be a notification of loss of entitlement to small or micro entity status, as applicable.

NOTE: The Issue Fee and Publication Fee (if required) will not be accepted from anyone other than the applicant; a registered attorney or agent; or the assignee or other party in interest as shown by the records of the United States Patent and Trademark Office.

Authorized Signature _____ Date _____

Typed or printed name _____ Registration No. _____

This collection of information is required by 37 CFR 1.311. The information is required to obtain or retain a benefit by the public which is to file (and by the USPTO to process) an application. Confidentiality is governed by 35 U.S.C. 122 and 37 CFR 1.14. This collection is estimated to take 12 minutes to complete, including gathering, preparing, and submitting the completed application form to the USPTO. Time will vary depending upon the individual case. Any comments on the amount of time you require to complete this form and/or suggestions for reducing this burden, should be sent to the Chief Information Officer, U.S. Patent and Trademark Office, U.S. Department of Commerce, P.O. Box 1450, Alexandria, Virginia 22313-1450. DO NOT SEND FEES OR COMPLETED FORMS TO THIS ADDRESS. SEND TO: Commissioner for Patents, P.O. Box 1450, Alexandria, Virginia 22313-1450.

Under the Paperwork Reduction Act of 1995, no persons are required to respond to a collection of information unless it displays a valid OMB control number.

IPR2024-00135
Petitioners' Ex. 1002
Ex.1002.00209

UNITED STATES PATENT AND TRADEMARK OFFICE

UNITED STATES DEPARTMENT OF COMMERCE
United States Patent and Trademark Office
Address: COMMISSIONER FOR PATENTS
P.O. Box 1450
Alexandria, Virginia 22313-1450
www.uspto.gov

APPLICATION NO.	FILING DATE	FIRST NAMED INVENTOR	ATTORNEY DOCKET NO.	CONFIRMATION NO.
13/321,792	11/21/2011	Ezekiel Kruglick	006.P090	5874

65638 7590 06/06/2013
OMIKRON IP LAW GROUP
5895 Jean Road
LAKE OSWEGO, OR 97035

EXAMINER
BHATTACHARYA, SAM

ART UNIT	PAPER NUMBER
2646	

DATE MAILED: 06/06/2013

Determination of Patent Term Adjustment under 35 U.S.C. 154 (b)
(application filed on or after May 29, 2000)

The Patent Term Adjustment to date is 0 day(s). If the issue fee is paid on the date that is three months after the mailing date of this notice and the patent issues on the Tuesday before the date that is 28 weeks (six and a half months) after the mailing date of this notice, the Patent Term Adjustment will be 0 day(s).

If a Continued Prosecution Application (CPA) was filed in the above-identified application, the filing date that determines Patent Term Adjustment is the filing date of the most recent CPA.

Applicant will be able to obtain more detailed information by accessing the Patent Application Information Retrieval (PAIR) WEB site (http://pair.uspto.gov).

Any questions regarding the Patent Term Extension or Adjustment determination should be directed to the Office of Patent Legal Administration at (571)-272-7702. Questions relating to issue and publication fee payments should be directed to the Customer Service Center of the Office of Patent Publication at 1-(888)-786-0101 or (571)-272-4200.

PTOL-85 (Rev. 02/11)

IPR2024-00135
Petitioners' Ex. 1002
Ex.1002.00210

Privacy Act Statement

The Privacy Act of 1974 (P.L. 93-579) requires that you be given certain information in connection with your submission of the attached form related to a patent application or patent. Accordingly, pursuant to the requirements of the Act, please be advised that: (1) the general authority for the collection of this information is 35 U.S.C. 2(b)(2); (2) furnishing of the information solicited is voluntary; and (3) the principal purpose for which the information is used by the U.S. Patent and Trademark Office is to process and/or examine your submission related to a patent application or patent. If you do not furnish the requested information, the U.S. Patent and Trademark Office may not be able to process and/or examine your submission, which may result in termination of proceedings or abandonment of the application or expiration of the patent.

The information provided by you in this form will be subject to the following routine uses:

1. The information on this form will be treated confidentially to the extent allowed under the Freedom of Information Act (5 U.S.C. 552) and the Privacy Act (5 U.S.C 552a). Records from this system of records may be disclosed to the Department of Justice to determine whether disclosure of these records is required by the Freedom of Information Act.
2. A record from this system of records may be disclosed, as a routine use, in the course of presenting evidence to a court, magistrate, or administrative tribunal, including disclosures to opposing counsel in the course of settlement negotiations.
3. A record in this system of records may be disclosed, as a routine use, to a Member of Congress submitting a request involving an individual, to whom the record pertains, when the individual has requested assistance from the Member with respect to the subject matter of the record.
4. A record in this system of records may be disclosed, as a routine use, to a contractor of the Agency having need for the information in order to perform a contract. Recipients of information shall be required to comply with the requirements of the Privacy Act of 1974, as amended, pursuant to 5 U.S.C. 552a(m).
5. A record related to an International Application filed under the Patent Cooperation Treaty in this system of records may be disclosed, as a routine use, to the International Bureau of the World Intellectual Property Organization, pursuant to the Patent Cooperation Treaty.
6. A record in this system of records may be disclosed, as a routine use, to another federal agency for purposes of National Security review (35 U.S.C. 181) and for review pursuant to the Atomic Energy Act (42 U.S.C. 218(c)).
7. A record from this system of records may be disclosed, as a routine use, to the Administrator, General Services, or his/her designee, during an inspection of records conducted by GSA as part of that agency's responsibility to recommend improvements in records management practices and programs, under authority of 44 U.S.C. 2904 and 2906. Such disclosure shall be made in accordance with the GSA regulations governing inspection of records for this purpose, and any other relevant (i.e., GSA or Commerce) directive. Such disclosure shall not be used to make determinations about individuals.
8. A record from this system of records may be disclosed, as a routine use, to the public after either publication of the application pursuant to 35 U.S.C. 122(b) or issuance of a patent pursuant to 35 U.S.C. 151. Further, a record may be disclosed, subject to the limitations of 37 CFR 1.14, as a routine use, to the public if the record was filed in an application which became abandoned or in which the proceedings were terminated and which application is referenced by either a published application, an application open to public inspection or an issued patent.
9. A record from this system of records may be disclosed, as a routine use, to a Federal, State, or local law enforcement agency, if the USPTO becomes aware of a violation or potential violation of law or regulation.

Notice of Allowability	Application No. 13/321,792	Applicant(s) KRUGLICK, EZEKIEL	
	Examiner Sam Bhattacharya	Art Unit 2646	AIA (First Inventor to File) Status No

-- The MAILING DATE of this communication appears on the cover sheet with the correspondence address--

All claims being allowable, PROSECUTION ON THE MERITS IS (OR REMAINS) CLOSED in this application. If not included herewith (or previously mailed), a Notice of Allowance (PTOL-85) or other appropriate communication will be mailed in due course. **THIS NOTICE OF ALLOWABILITY IS NOT A GRANT OF PATENT RIGHTS.** This application is subject to withdrawal from issue at the initiative of the Office or upon petition by the applicant. See 37 CFR 1.313 and MPEP 1308.

1. ☒ This communication is responsive to *the Amendment filed on 2/15/13*.
   ☐ A declaration(s)/affidavit(s) under **37 CFR 1.130(b)** was/were filed on_____.
2. ☐ An election was made by the applicant in response to a restriction requirement set forth during the interview on _____; the restriction requirement and election have been incorporated into this action.
3. ☒ The allowed claim(s) is/are *1-27*. As a result of the allowed claim(s), you may be eligible to benefit from the **Patent Prosecution Highway** program at a participating intellectual property office for the corresponding application. For more information, please see http://www.uspto.gov/patents/init_events/pph/index.jsp or send an inquiry to PPHfeedback@uspto.gov .
4. ☐ Acknowledgment is made of a claim for foreign priority under 35 U.S.C. § 119(a)-(d) or (f).

   Certified copies:

   a) ☐ All b) ☐ Some *c) ☐ None of the:
   1. ☐ Certified copies of the priority documents have been received.
   2. ☐ Certified copies of the priority documents have been received in Application No. _____ .
   3. ☐ Copies of the certified copies of the priority documents have been received in this national stage application from the International Bureau (PCT Rule 17.2(a)).

   * Certified copies not received: _____.

   Interim copies:

   a) ☐ All b) ☐ Some c) ☐ None of the: Interim copies of the priority documents have been received.

Applicant has THREE MONTHS FROM THE "MAILING DATE" of this communication to file a reply complying with the requirements noted below. Failure to timely comply will result in ABANDONMENT of this application.
THIS THREE-MONTH PERIOD IS NOT EXTENDABLE.

5. ☐ CORRECTED DRAWINGS (as "replacement sheets") must be submitted.
   ☐ including changes required by the attached Examiner's Amendment / Comment or in the Office action of Paper No./Mail Date _____.

   Identifying indicia such as the application number (see 37 CFR 1.84(c)) should be written on the drawings in the front (not the back) of each sheet. Replacement sheet(s) should be labeled as such in the header according to 37 CFR 1.121(d).
6. ☐ DEPOSIT OF and/or INFORMATION about the deposit of BIOLOGICAL MATERIAL must be submitted. Note the attached Examiner's comment regarding REQUIREMENT FOR THE DEPOSIT OF BIOLOGICAL MATERIAL.

Attachment(s)

1. ☐ Notice of References Cited (PTO-892)
2. ☐ Information Disclosure Statements (PTO/SB/08), Paper No./Mail Date _____
3. ☐ Examiner's Comment Regarding Requirement for Deposit of Biological Material
4. ☐ Interview Summary (PTO-413), Paper No./Mail Date _____ .
5. ☐ Examiner's Amendment/Comment
6. ☒ Examiner's Statement of Reasons for Allowance
7. ☐ Other _____.

IPR2024-00135
Petitioners' Ex. 1002
Ex.1002.00212

DETAILED ACTION

Allowable Subject Matter

1. Claims 1-27 are allowed.

2. The following is an examiner's statement of reasons for allowance: the prior art fails to disclose the recited combinations of elements in providing network coverage for a group of devices in an area, including cycling over time through a coverage sequence that includes providing a first coverage configuration and providing a second coverage configuration, wherein: providing the second coverage configuration includes transmitting a second beam of the first network that is narrower than the first beam and configured to provide coverage to at least one continuous use device of the group of devices, the at least one continuous use device being actively involved in a substantially continuous service with the network, and providing coverage by a second network to a plurality of interval use devices of the group of devices, and variations thereof, as in claims 1, 14, 17, 20 and 23.

Any comments considered necessary by applicant must be submitted no later than the payment of the issue fee and, to avoid processing delays, should preferably accompany the issue fee. Such submissions should be clearly labeled "Comments on Statement of Reasons for Allowance."

Any inquiry concerning this communication or earlier communications from the examiner should be directed to Sam Bhattacharya whose telephone number is (571)272-7917. The examiner can normally be reached on Weekdays, 9-5:30.

If attempts to reach the examiner by telephone are unsuccessful, the examiner's supervisor, Lester Kincaid can be reached on (571) 272-7922. The fax phone number for the organization where this application or proceeding is assigned is 571-273-8300.

Information regarding the status of an application may be obtained from the Patent Application Information Retrieval (PAIR) system. Status information for published applications may be obtained from either Private PAIR or Public PAIR. Status information for unpublished applications is available through Private PAIR only. For more information about the PAIR system, see http://pair-direct.uspto.gov. Should you have questions on access to the Private PAIR system, contact the Electronic Business Center (EBC) at 866-217-9197 (toll-free). If you would like assistance from a USPTO Customer Service Representative or access to the automated information system, call 800-786-9199 (IN USA OR CANADA) or 571-272-1000.

sb

/Sam Bhattacharya/
Primary Examiner, Art Unit 2646

Search Notes	Application/Control No.	Applicant(s)/Patent Under Reexamination
	13321792	KRUGLICK, EZEKIEL
	Examiner	**Art Unit**
	SAM BHATTACHARYA	2646

CPC- SEARCHED

Symbol	Date	Examiner

CPC COMBINATION SETS - SEARCHED

Symbol	Date	Examiner

US CLASSIFICATION SEARCHED

Class	Subclass	Date	Examiner
455	422.1,427,450,562.1	11/15/2012	sb
Updated		5/30/2013	sb

SEARCH NOTES

Search Notes	Date	Examiner
East	11/15/2012	sb
Updated East	5/30/2013	sb

INTERFERENCE SEARCH

US Class/ CPC Symbol	US Subclass / CPC Group	Date	Examiner
455	422.1,427,450,562.1	5/30/2013	sb
East		5/30/2013	sb

IPR2024-00135
Petitioners' Ex. 1002
Ex.1002.00215

Issue Classification	Application/Control No.	Applicant(s)/Patent Under Reexamination
	13321792	KRUGLICK, EZEKIEL
	Examiner	**Art Unit**
	SAM BHATTACHARYA	2646

CPC						
Symbol					**Type**	**Version**

CPC Combination Sets							
Symbol				**Type**	**Set**	**Ranking**	**Version**

US ORIGINAL CLASSIFICATION		INTERNATIONAL CLASSIFICATION									
CLASS	**SUBCLASS**	**CLAIMED**					**NON-CLAIMED**				
455	422.1	H	0	4	W	16 / 24 (2009.01.01)					
CROSS REFERENCE(S)											
CLASS	**SUBCLASS (ONE SUBCLASS PER BLOCK)**										
455	450										

NONE (Assistant Examiner) (Date)		**Total Claims Allowed:** 27	
/SAM BHATTACHARYA/ Primary Examiner.Art Unit 2646 (Primary Examiner)	5/30/13 (Date)	O.G. Print Claim(s) 1	O.G. Print Figure 1A

IPR2024-00135
Petitioners' Ex. 1002
Ex.1002.00216

Issue Classification	Application/Control No.	Applicant(s)/Patent Under Reexamination
	13321792	KRUGLICK, EZEKIEL
	Examiner	**Art Unit**
	SAM BHATTACHARYA	2646

NONE (Assistant Examiner)	(Date)	**Total Claims Allowed:** 27	
/SAM BHATTACHARYA/ Primary Examiner.Art Unit 2646 (Primary Examiner)	5/30/13 (Date)	O.G. Print Claim(s) 1	O.G. Print Figure 1A

U.S. Patent and Trademark Office

Part of Paper No. 20130530

Issue Classification	Application/Control No.	Applicant(s)/Patent Under Reexamination
	13321792	KRUGLICK, EZEKIEL
	Examiner	**Art Unit**
	SAM BHATTACHARYA	2646

☒ **Claims renumbered in the same order as presented by applicant** ☐ **CPA** ☐ **T.D.** ☐ **R.1.47**

Final	Original	Final	Original	Final	Original	Final	Original	Final	Original	Final	Original	Final	Original	Final	Original
1	1	17	17												
2	2	18	18												
3	3	19	19												
4	4	20	20												
5	5	21	21												
6	6	22	22												
7	7	23	23												
8	8	24	24												
9	9	25	25												
10	10	26	26												
11	11	27	27												
12	12														
13	13														
14	14														
15	15														
16	16														

NONE (Assistant Examiner)	(Date)	**Total Claims Allowed:** 27	
/SAM BHATTACHARYA/ Primary Examiner.Art Unit 2646 (Primary Examiner)	5/30/13 (Date)	O.G. Print Claim(s) 1	O.G. Print Figure 1A

IPR2024-00135
Petitioners' Ex. 1002
Ex.1002.00218

EAST Search History

EAST Search History (Prior Art)

Ref #	Hits	Search Query	DBs	Default Operator	Plurals	Time Stamp
L1	14153	(455/422.1,427,450,562.1).CCLS.	US-PGPUB; USPAT; USOCR	OR	OFF	2013/06/01 12:16
L2	77	coverage near9 beam near7 narrower	US-PGPUB; USPAT	OR	ON	2013/06/01 12:17
L3	531	coverage near9 beam near7 narrow$3	US-PGPUB; USPAT	OR	ON	2013/06/01 12:17
L4	2	(US-20110223925-$).did. or (US-6546259-$).did.	US-PGPUB; USPAT	OR	OFF	2013/06/01 12:17
L6	5	continu$3 near8 coverage near9 beam near7 narrow$3	US-PGPUB; USPAT	OR	ON	2013/06/01 12:23
S1	510	coverage near9 beam near7 narrow$3	US-PGPUB; USPAT	OR	ON	2012/11/19 12:50
S2	1	cycl$4 near8 coverage near9 beam near7 narrow$3	US-PGPUB; USPAT	OR	ON	2012/11/19 12:50
S3	75	coverage near9 beam near7 narrower	US-PGPUB; USPAT	OR	ON	2012/11/19 12:53
S4	13129	(455/422.1,427,450,562.1).CCLS.	US-PGPUB; USPAT; USOCR	OR	OFF	2012/11/19 13:09

6/1/2013 12:24:39 PM
C:\Users\sbhattacharya\Documents\EAST\Workspaces\13321792.wsp

Index of Claims	Application/Control No.	Applicant(s)/Patent Under Reexamination
	13321792	KRUGLICK, EZEKIEL
	Examiner	**Art Unit**
	SAM BHATTACHARYA	2646

✓	Rejected	-	Cancelled	N	Non-Elected	A	Appeal
=	Allowed	÷	Restricted	I	Interference	O	Objected

☒ Claims renumbered in the same order as presented by applicant ☐ CPA ☐ T.D. ☐ R.1.47

CLAIM		DATE								
Final	Original	11/15/2012	05/30/2013							
1	1	✓	=							
2	2	✓	=							
3	3	✓	=							
4	4	✓	=							
5	5	✓	=							
6	6	✓	=							
7	7	✓	=							
8	8	✓	=							
9	9	✓	=							
10	10	✓	=							
11	11	✓	=							
12	12	✓	=							
13	13	✓	=							
14	14	✓	=							
15	15	✓	=							
16	16	✓	=							
17	17	✓	=							
18	18	✓	=							
19	19	✓	=							
20	20	✓	=							
21	21	✓	=							
22	22	✓	=							
23	23	✓	=							
24	24	✓	=							
25	25	✓	=							
26	26	✓	=							
27	27	✓	=							

IPR2024-00135
Petitioners' Ex. 1002
Ex.1002.00220

PTO/SB/80 (11-08)
Approved for use through 11/30/2011. OMB 0651-0035
U.S. Patent and Trademark Office; U.S. DEPARTMENT OF COMMERCE
Under the Paperwork Reduction Act of 1995, no persons are required to respond to a collection of information unless it displays a valid OMB control number.

POWER OF ATTORNEY TO PROSECUTE APPLICATIONS BEFORE THE USPTO

I hereby revoke all previous powers of attorney given in the application identified in the attached statement under 37 CFR 3.73(b).

I hereby appoint:

☑ Practitioners associated with the Customer Number: 86636

OR

☐ Practitioner(s) named below (if more than ten patent practitioners are to be named, then a customer number must be used):

Name	Registration Number	Name	Registration Number

as attorney(s) or agent(s) to represent the undersigned before the United States Patent and Trademark Office (USPTO) in connection with any and all patent applications assigned only to the undersigned according to the USPTO assignment records or assignment documents attached to this form in accordance with 37 CFR 3.73(b).

Please change the correspondence address for the application identified in the attached statement under 37 CFR 3.73(b) to:

☑ The address associated with Customer Number: 86636

OR

☐ Firm or Individual Name			
Address			
City		State	Zip
Country			
Telephone		Email	

Assignee Name and Address:

Empire Technology Development LLC
2711 Centerville Road, Suite 400
Wilmington, Delaware 19808

A copy of this form, together with a statement under 37 CFR 3.73(b) (Form PTO/SB/96 or equivalent) is required to be filed in each application in which this form is used. The statement under 37 CFR 3.73(b) may be completed by one of the practitioners appointed in this form if the appointed practitioner is authorized to act on behalf of the assignee, and must identify the application in which this Power of Attorney is to be filed.

SIGNATURE of Assignee of Record

The individual whose signature and title is supplied below is authorized to act on behalf of the assignee

Signature			Date 25-4-2011
Name		JEROME HEWLETT	Telephone
Title		Authorized Person.	

This collection of information is required by 37 CFR 1.31, 1.32 and 1.33. The information is required to obtain or retain a benefit by the public which is to file (and by the USPTO to process) an application. Confidentiality is governed by 35 U.S.C. 122 and 37 CFR 1.11 and 1.14. This collection is estimated to take 3 minutes to complete, including gathering, preparing, and submitting the completed application form to the USPTO. Time will vary depending upon the individual case. Any comments on the amount of time you require to complete this form and/or suggestions for reducing this burden, should be sent to the Chief Information Officer, U.S. Patent and Trademark Office, U.S. Department of Commerce, P.O. Box 1450, Alexandria, VA 22313-1450. DO NOT SEND FEES OR COMPLETED FORMS TO THIS ADDRESS. **SEND TO: Commissioner for Patents, P.O. Box 1450, Alexandria, VA 22313-1450.**

If you need assistance in completing the form, call 1-800-PTO-9199 and select option 2.

Electronic Acknowledgement Receipt

EFS ID:	16218637
Application Number:	13321792
International Application Number:	
Confirmation Number:	5874
Title of Invention:	NETWORK COVERAGE BY CYCLING THROUGH BEAM SHAPE COVERAGE CONFIGURATIONS
First Named Inventor/Applicant Name:	Ezekiel Kruglick
Customer Number:	65638
Filer:	David S. Lee/Nora Colston
Filer Authorized By:	David S. Lee
Attorney Docket Number:	006.P090
Receipt Date:	02-JUL-2013
Filing Date:	21-NOV-2011
Time Stamp:	15:11:38
Application Type:	U.S. National Stage under 35 USC 371

Payment information:

Submitted with Payment	no

File Listing:

Document Number	Document Description	File Name	File Size(Bytes)/ Message Digest	Multi Part /.zip	Pages (if appl.)
1	Assignee showing of ownership per 37 CFR 3.73.	2799_373statement.pdf	428435 5f0c16fa2fe990572ca0da5756a94e79fd142216	no	2

Warnings:

Information:

2	Power of Attorney	2799_PoA.pdf	133176 3f92c3c78141763e307d737f20b64e7914421616	no	1
Warnings:					
Information:					
			Total Files Size (in bytes):	561611	

This Acknowledgement Receipt evidences receipt on the noted date by the USPTO of the indicated documents, characterized by the applicant, and including page counts, where applicable. It serves as evidence of receipt similar to a Post Card, as described in MPEP 503.

<u>New Applications Under 35 U.S.C. 111</u>
If a new application is being filed and the application includes the necessary components for a filing date (see 37 CFR 1.53(b)-(d) and MPEP 506), a Filing Receipt (37 CFR 1.54) will be issued in due course and the date shown on this Acknowledgement Receipt will establish the filing date of the application.

<u>National Stage of an International Application under 35 U.S.C. 371</u>
If a timely submission to enter the national stage of an international application is compliant with the conditions of 35 U.S.C. 371 and other applicable requirements a Form PCT/DO/EO/903 indicating acceptance of the application as a national stage submission under 35 U.S.C. 371 will be issued in addition to the Filing Receipt, in due course.

<u>New International Application Filed with the USPTO as a Receiving Office</u>
If a new international application is being filed and the international application includes the necessary components for an international filing date (see PCT Article 11 and MPEP 1810), a Notification of the International Application Number and of the International Filing Date (Form PCT/RO/105) will be issued in due course, subject to prescriptions concerning national security, and the date shown on this Acknowledgement Receipt will establish the international filing date of the application.

PTO/SB/96 (06-09)
Approved for use through 07/31/2009. OMB 0651-0031
U.S. Patent and Trademark Office; U.S. DEPARTMENT OF COMMERCE
Under the Paperwork Reduction Act of 1995, no persons are required to respond to a collection of information unless it displays a valid OMB control number.

STATEMENT UNDER 37 CFR 3.73(b)

Applicant/Patent Owner: Empire Technology Development LLC

Application No./Patent No.: 13/321,792 Filed/Issue Date: 11-21-2011

Titled: NETWORK COVERAGE BY CYCLING THROUGH BEAM SHAPE COVERAGE CONFIGURATIONS

Empire Technology Development LLC, a Limited Liability Company
(Name of Assignee) (Type of Assignee, e.g., corporation, partnership, university, government agency, etc.

states that it is:

1. [X] the assignee of the entire right, title, and interest in;

2. [ ] an assignee of less than the entire right, title, and interest in
(The extent (by percentage) of its ownership interest is _____ %); or

3. [ ] the assignee of an undivided interest in the entirety of (a complete assignment from one of the joint inventors was made)

the patent application/patent identified above, by virtue of either:

A. [ ] An assignment from the inventor(s) of the patent application/patent identified above. The assignment was recorded in the United States Patent and Trademark Office at Reel _____, Frame _____, or for which a copy therefore is attached.

OR

B. [X] A chain of title from the inventor(s), of the patent application/patent identified above, to the current assignee as follows:

1. From: E. Kruglick To: Ardent Research Corporation
The document was recorded in the United States Patent and Trademark Office at
Reel 026802, Frame 0664, or for which a copy thereof is attached.

2. From: Ardent Research Corporation To: Empire Technology Development LLC
The document was recorded in the United States Patent and Trademark Office at
Reel 026802, Frame 0672, or for which a copy thereof is attached.

3. From: _____ To: _____
The document was recorded in the United States Patent and Trademark Office at
Reel _____, Frame _____, or for which a copy thereof is attached.

[ ] Additional documents in the chain of title are listed on a supplemental sheet(s).

[X] As required by 37 CFR 3.73(b)(1)(i), the documentary evidence of the chain of title from the original owner to the assignee was, or concurrently is being, submitted for recordation pursuant to 37 CFR 3.11.

[NOTE: A separate copy (*i.e.*, a true copy of the original assignment document(s)) must be submitted to Assignment Division in accordance with 37 CFR Part 3, to record the assignment in the records of the USPTO. See MPEP 302.08]

The undersigned (whose title is supplied below) is authorized to act on behalf of the assignee.

/David S. Lee/	July 2, 2013
Signature	Date
David S. Lee, Reg. No.: 38,222	Patent Attorney for Applicant
Printed or Typed Name	Title

This collection of information is required by 37 CFR 3.73(b). The information is required to obtain or retain a benefit by the public which is to file (and by the USPTO to process) an application. Confidentiality is governed by 35 U.S.C. 122 and 37 CFR 1.11 and 1.14. This collection is estimated to take 12 minutes to complete, including gathering, preparing, and submitting the completed application form to the USPTO. Time will vary depending upon the individual case. Any comments on the amount of time you require to complete this form and/or suggestions for reducing this burden, should be sent to the Chief Information Officer, U.S. Patent and Trademark Office, U.S. Department of Commerce, P.O. Box 1450, Alexandria, VA 22313-1450. DO NOT SEND FEES OR COMPLETED FORMS TO THIS ADDRESS. **SEND TO: Commissioner for Patents, P.O. Box 1450, Alexandria, VA 22313-1450.**

If you need assistance in completing the form, call 1-800-PTO-9199 and select option 2.

Privacy Act Statement

The **Privacy Act of 1974 (P.L. 93-579)** requires that you be given certain information in connection with your submission of the attached form related to a patent application or patent. Accordingly, pursuant to the requirements of the Act, please be advised that: (1) the general authority for the collection of this information is 35 U.S.C. 2(b)(2); (2) furnishing of the information solicited is voluntary; and (3) the principal purpose for which the information is used by the U.S. Patent and Trademark Office is to process and/or examine your submission related to a patent application or patent. If you do not furnish the requested information, the U.S. Patent and Trademark Office may not be able to process and/or examine your submission, which may result in termination of proceedings or abandonment of the application or expiration of the patent.

The information provided by you in this form will be subject to the following routine uses:

1. The information on this form will be treated confidentially to the extent allowed under the Freedom of Information Act (5 U.S.C. 552) and the Privacy Act (5 U.S.C 552a). Records from this system of records may be disclosed to the Department of Justice to determine whether disclosure of these records is required by the Freedom of Information Act.
2. A record from this system of records may be disclosed, as a routine use, in the course of presenting evidence to a court, magistrate, or administrative tribunal, including disclosures to opposing counsel in the course of settlement negotiations.
3. A record in this system of records may be disclosed, as a routine use, to a Member of Congress submitting a request involving an individual, to whom the record pertains, when the individual has requested assistance from the Member with respect to the subject matter of the record.
4. A record in this system of records may be disclosed, as a routine use, to a contractor of the Agency having need for the information in order to perform a contract. Recipients of information shall be required to comply with the requirements of the Privacy Act of 1974, as amended, pursuant to 5 U.S.C. 552a(m).
5. A record related to an International Application filed under the Patent Cooperation Treaty in this system of records may be disclosed, as a routine use, to the International Bureau of the World Intellectual Property Organization, pursuant to the Patent Cooperation Treaty.
6. A record in this system of records may be disclosed, as a routine use, to another federal agency for purposes of National Security review (35 U.S.C. 181) and for review pursuant to the Atomic Energy Act (42 U.S.C. 218(c)).
7. A record from this system of records may be disclosed, as a routine use, to the Administrator, General Services, or his/her designee, during an inspection of records conducted by GSA as part of that agency's responsibility to recommend improvements in records management practices and programs, under authority of 44 U.S.C. 2904 and 2906. Such disclosure shall be made in accordance with the GSA regulations governing inspection of records for this purpose, and any other relevant (*i.e.*, GSA or Commerce) directive. Such disclosure shall not be used to make determinations about individuals.
8. A record from this system of records may be disclosed, as a routine use, to the public after either publication of the application pursuant to 35 U.S.C. 122(b) or issuance of a patent pursuant to 35 U.S.C. 151. Further, a record may be disclosed, subject to the limitations of 37 CFR 1.14, as a routine use, to the public if the record was filed in an application which became abandoned or in which the proceedings were terminated and which application is referenced by either a published application, an application open to public inspection or an issued patent.
9. A record from this system of records may be disclosed, as a routine use, to a Federal, State, or local law enforcement agency, if the USPTO becomes aware of a violation or potential violation of law or regulation.

UNITED STATES PATENT AND TRADEMARK OFFICE

UNITED STATES DEPARTMENT OF COMMERCE
United States Patent and Trademark Office
Address: COMMISSIONER FOR PATENTS
P.O. Box 1450
Alexandria, Virginia 22313-1450
www.uspto.gov

APPLICATION NUMBER	FILING OR 371(C) DATE	FIRST NAMED APPLICANT	ATTY. DOCKET NO./TITLE
13/321,792	11/21/2011	Ezekiel Kruglick	006.P090

CONFIRMATION NO. 5874

86636
BRUNDIDGE & STANGER, P.C.
2318 MILL ROAD, SUITE 1020
ALEXANDRIA, VA 22314

POA ACCEPTANCE LETTER

OC000000062441228

Date Mailed: 07/11/2013

NOTICE OF ACCEPTANCE OF POWER OF ATTORNEY

This is in response to the Power of Attorney filed 07/02/2013.

The Power of Attorney in this application is accepted. Correspondence in this application will be mailed to the above address as provided by 37 CFR 1.33.

/afessehaye/

Office of Data Management, Application Assistance Unit (571) 272-4000, or (571) 272-4200, or 1-888-786-0101

UNITED STATES PATENT AND TRADEMARK OFFICE

UNITED STATES DEPARTMENT OF COMMERCE
United States Patent and Trademark Office
Address: COMMISSIONER FOR PATENTS
P.O. Box 1450
Alexandria, Virginia 22313-1450
www.uspto.gov

APPLICATION NUMBER	FILING OR 371(C) DATE	FIRST NAMED APPLICANT	ATTY. DOCKET NO./TITLE
13/321,792	11/21/2011	Ezekiel Kruglick	006.P090

CONFIRMATION NO. 5874

POWER OF ATTORNEY NOTICE

65638
OMIKRON IP LAW GROUP
5895 Jean Road
LAKE OSWEGO, OR 97035

OC000000062441192

Date Mailed: 07/11/2013

NOTICE REGARDING CHANGE OF POWER OF ATTORNEY

This is in response to the Power of Attorney filed 07/02/2013.

- The Power of Attorney to you in this application has been revoked by the assignee who has intervened as provided by 37 CFR 3.71. Future correspondence will be mailed to the new address of record(37 CFR 1.33).

/afessehaye/

Office of Data Management, Application Assistance Unit (571) 272-4000, or (571) 272-4200, or 1-888-786-0101

PART B - FEE(S) TRANSMITTAL

Complete and send this form, together with applicable fee(s), to: Mail **Mail Stop ISSUE FEE**
Commissioner for Patents
P.O. Box 1450
Alexandria, Virginia 22313-1450
or Fax (571) 273-2885

INSTRUCTIONS: This form should be used for transmitting the ISSUE FEE and PUBLICATION FEE (if required). Blocks 1 through 5 should be completed where appropriate. All further correspondence including the Patent, advance orders and notification of maintenance fees will be mailed to the current correspondence address as indicated unless corrected below or directed otherwise in Block 1, by (a) specifying a new correspondence address; and/or (b) indicating a separate "FEE ADDRESS" for maintenance fee notifications.

CURRENT CORRESPONDENCE ADDRESS (Note: Use Block 1 for any change of address)

Brundidge & Stanger, P.C.
2318 Mill Road
Suite 1020
Alexandria, VA 22314

Note: A certificate of mailing can only be used for domestic mailings of the Fee(s) Transmittal. This certificate cannot be used for any other accompanying papers. Each additional paper, such as an assignment or formal drawing, must have its own certificate of mailing or transmission.

Certificate of Mailing or Transmission

I hereby certify that this Fee(s) Transmittal is being deposited with the United States Postal Service with sufficient postage for first class mail in an envelope addressed to the Mail Stop ISSUE FEE address above, or being facsimile transmitted to the USPTO (571) 273-2885, on the date indicated below.

(Depositor's name)
(Signature)
(Date)

APPLICATION NO.	FILING DATE	FIRST NAMED INVENTOR	ATTORNEY DOCKET NO.	CONFIRMATION NO.
13/321,792	11/21/2011	Ezekiel Kruglick	2799.737BS	5874

TITLE OF INVENTION:

APPLN. TYPE	SMALL ENTITY	ISSUE FEE	PUBLICATION FEE	TOTAL FEE(S) DUE	DATE DUE
nonprovisional	NO	$1780	$300	$2080	09/06/2013

EXAMINER	ART UNIT	CLASS-SUBCLASS

1. Change of correspondence address or indication of "Fee Address" (37 CFR 1.363).

☐ Change of correspondence address (or Change of Correspondence Address form PTO/SB/122) attached.

☐ "Fee Address" indication (or "Fee Address" Indication form PTO/SB/47; Rev 03-02 or more recent) attached. **Use of a Customer Number is required.**

2. For printing on the patent front page, list

(1) the names of up to 3 registered patent attorneys or agents OR, alternatively,

(2) the name of a single firm (having as a member a registered attorney or agent) and the names of up to 2 registered patent attorneys or agents. If no name is listed, no name will be printed.

1 Brundidge & Stanger, P.C.
2
3

3. ASSIGNEE NAME AND RESIDENCE DATA TO BE PRINTED ON THE PATENT (print or type)

PLEASE NOTE: Unless an assignee is identified below, no assignee data will appear on the patent. If an assignee is identified below, the document has been filed for recordation as set forth in 37 CFR 3.11. Completion of this form is NOT a substitute for filing an assignment.

(A) NAME OF ASSIGNEE	(B) RESIDENCE: (CITY and STATE OR COUNTRY)
EMPIRE TECHNOLOGY DEVELOPMENT LLC	WILMINGTON, DELAWARE

Please check the appropriate assignee category or categories (will not be printed on the patent) : ☐ Individual ☑ Corporation or other private group entity ☐ Government

4a. The following fee(s) are enclosed:

☑ Issue Fee
☑ Publication Fee (No small entity discount permitted)
☐ Advance Order - # of Copies _

4b. Payment of Fee(s):

☐ A check in the amount of the fee(s) is enclosed.
☑ Payment by credit card. Form PTO-2038 is attached.
☑ The Director is hereby authorized by charge the required fee(s), or credit any overpayment, to Deposit Account Number 50-4888 .

5. **Change in Entity Status** (from status indicated above)

☐ a. Applicant claims SMALL ENTITY status. See 37 CFR 1.27.
☐ b. Applicant is no longer claiming SMALL ENTITY status. See 37 CFR 1.27(g)(2).

The Director of the USPTO is requested to apply the Issue Fee and Publication Fee (if any) or to re-apply any previously paid issue fee to the application identified above.
NOTE: The Issue Fee and Publication Fee (if required) will not be accepted from anyone other than the applicant; a registered attorney or agent; or the assignee or other party in interest as shown by the records of the United States Patent and Trademark Office.

Authorized Signature /Daniel J. Stanger/ Date September 5, 2013

Typed or printed name Daniel J. Stanger Registration No. 32,846

This collection of information is required by 37 CFR 1.311. The information is required to obtain or retain a benefit by the public which is to file (and by the USPTO to process) an application. Confidentiality is governed by 35 U.S.C. 122 and 37 CFR 1.14. This collection is estimated to take 12 minutes to complete, including gathering, preparing, and submitting the completed application form to the USPTO. Time will vary depending upon the individual case. Any comments on the amount of time you require to complete this form and/or suggestions for reducing this burden, should be sent to the Chief Information Officer, U.S. Patent and Trademark Office, U.S. Department of Commerce, P.O. Box 1450, Alexandria, Virginia 22313-1450. DO NOT SEND FEES OR COMPLETED FORMS TO THIS ADDRESS. SEND TO: Commissioner for Patents, P.O. Box 1450, Alexandria, Virginia 22313-1450.

Under the Paperwork Reduction Act of 1995, no persons are required to respond to a collection of information unless it displays a valid OMB control number.

IPR2024-00135
Petitioners' Ex. 1002
Ex.1002.00228

Privacy Act Statement

The Privacy Act of 1974 (P.L. 93-579) requires that you be given certain information in connection with your submission of the attached form related to a patent application or patent. Accordingly, pursuant to the requirements of the Act, please be advised that: (1) the general authority for the collection of this information is 35 U.S.C. 2(b)(2); (2) furnishing of the information solicited is voluntary; and (3) the principal purpose for which the information is used by the U.S. Patent and Trademark Office is to process and/or examine your submission related to a patent application or patent. If you do not furnish the requested information, the U.S. Patent and Trademark Office may not be able to process and/or examine your submission, which may result in termination of proceedings or abandonment of the application or expiration of the patent.

The information provided by you in this form will be subject to the following routine uses:

1. The information on this form will be treated confidentially to the extent allowed under the Freedom of Information Act (5 U.S.C. 552) and the Privacy Act (5 U.S.C 552a). Records from this system of records may be disclosed to the Department of Justice to determine whether disclosure of these records is required by the Freedom of Information Act.
2. A record from this system of records may be disclosed, as a routine use, in the course of presenting evidence to a court, magistrate, or administrative tribunal, including disclosures to opposing counsel in the course of settlement negotiations.
3. A record in this system of records may be disclosed, as a routine use, to a Member of Congress submitting a request involving an individual, to whom the record pertains, when the individual has requested assistance from the Member with respect to the subject matter of the record.
4. A record in this system of records may be disclosed, as a routine use, to a contractor of the Agency having need for the information in order to perform a contract. Recipients of information shall be required to comply with the requirements of the Privacy Act of 1974, as amended, pursuant to 5 U.S.C. 552a(m).
5. A record related to an International Application filed under the Patent Cooperation Treaty in this system of records may be disclosed, as a routine use, to the International Bureau of the World Intellectual Property Organization, pursuant to the Patent Cooperation Treaty.
6. A record in this system of records may be disclosed, as a routine use, to another federal agency for purposes of National Security review (35 U.S.C. 181) and for review pursuant to the Atomic Energy Act (42 U.S.C. 218(c)).
7. A record from this system of records may be disclosed, as a routine use, to the Administrator, General Services, or his/her designee, during an inspection of records conducted by GSA as part of that agency's responsibility to recommend improvements in records management practices and programs, under authority of 44 U.S.C. 2904 and 2906. Such disclosure shall be made in accordance with the GSA regulations governing inspection of records for this purpose, and any other relevant (i.e., GSA or Commerce) directive. Such disclosure shall not be used to make determinations about individuals.
8. A record from this system of records may be disclosed, as a routine use, to the public after either publication of the application pursuant to 35 U.S.C. 122(b) or issuance of a patent pursuant to 35 U.S.C. 151. Further, a record may be disclosed, subject to the limitations of 37 CFR 1.14, as a routine use, to the public if the record was filed in an application which became abandoned or in which the proceedings were terminated and which application is referenced by either a published application, an application open to public inspection or an issued patent.
9. A record from this system of records may be disclosed, as a routine use, to a Federal, State, or local law enforcement agency, if the USPTO becomes aware of a violation or potential violation of law or regulation.

Electronic Patent Application Fee Transmittal

Application Number:	13321792
Filing Date:	21-Nov-2011
Title of Invention:	NETWORK COVERAGE BY CYCLING THROUGH BEAM SHAPE COVERAGE CONFIGURATIONS
First Named Inventor/Applicant Name:	Ezekiel Kruglick
Filer:	Daniel John Stanger/Kristin Huber
Attorney Docket Number:	2799.737BS

Filed as Large Entity

U.S. National Stage under 35 USC 371 Filing Fees

Description	Fee Code	Quantity	Amount	Sub-Total in USD($)
Basic Filing:				
Pages:				
Claims:				
Miscellaneous-Filing:				
Petition:				
Patent-Appeals-and-Interference:				
Post-Allowance-and-Post-Issuance:				
Utility Appl Issue Fee	1501	1	1780	1780
Publ. Fee- Early, Voluntary, or Normal	1504	1	300	300

Description	Fee Code	Quantity	Amount	Sub-Total in USD($)
Extension-of-Time:				
Miscellaneous:				
		Total in USD ($)		**2080**

Electronic Acknowledgement Receipt

EFS ID:	16767986
Application Number:	13321792
International Application Number:	
Confirmation Number:	5874
Title of Invention:	NETWORK COVERAGE BY CYCLING THROUGH BEAM SHAPE COVERAGE CONFIGURATIONS
First Named Inventor/Applicant Name:	Ezekiel Kruglick
Customer Number:	86636
Filer:	Daniel John Stanger/Kristin Huber
Filer Authorized By:	Daniel John Stanger
Attorney Docket Number:	2799.737BS
Receipt Date:	05-SEP-2013
Filing Date:	21-NOV-2011
Time Stamp:	14:48:58
Application Type:	U.S. National Stage under 35 USC 371

Payment information:

Submitted with Payment	yes
Payment Type	Credit Card
Payment was successfully received in RAM	$2080
RAM confirmation Number	1326
Deposit Account	504888
Authorized User	BRUNDIDGE, CARL I.

The Director of the USPTO is hereby authorized to charge indicated fees and credit any overpayment as follows:

Charge any Additional Fees required under 37 C.F.R. 1.492 (National application filing, search, and examination fees)

Charge any Additional Fees required under 37 C.F.R. Section 1.17 (Patent application and reexamination processing fees)

Charge any Additional Fees required under 37 C.F.R. Section 1.19 (Document supply fees)

Charge any Additional Fees required under 37 C.F.R. Section 1.20 (Post Issuance fees)

Charge any Additional Fees required under 37 C.F.R. Section 1.21 (Miscellaneous fees and charges)

File Listing:

Document Number	Document Description	File Name	File Size(Bytes)/ Message Digest	Multi Part /.zip	Pages (if appl.)
1	Issue Fee Payment (PTO-85B)	US-813897-02-US-NAT_issue_fee_transmittal.pdf	228290 555033f63d2468da0cb5960658b4eb5380659927	no	2
Warnings:					
Information:					
2	Fee Worksheet (SB06)	fee-info.pdf	32474 79167f1902c8c4966c269923ca60cf576911ec55	no	2
Warnings:					
Information:					
		Total Files Size (in bytes):	260764		

This Acknowledgement Receipt evidences receipt on the noted date by the USPTO of the indicated documents, characterized by the applicant, and including page counts, where applicable. It serves as evidence of receipt similar to a Post Card, as described in MPEP 503.

<u>New Applications Under 35 U.S.C. 111</u>
If a new application is being filed and the application includes the necessary components for a filing date (see 37 CFR 1.53(b)-(d) and MPEP 506), a Filing Receipt (37 CFR 1.54) will be issued in due course and the date shown on this Acknowledgement Receipt will establish the filing date of the application.

<u>National Stage of an International Application under 35 U.S.C. 371</u>
If a timely submission to enter the national stage of an international application is compliant with the conditions of 35 U.S.C. 371 and other applicable requirements a Form PCT/DO/EO/903 indicating acceptance of the application as a national stage submission under 35 U.S.C. 371 will be issued in addition to the Filing Receipt, in due course.

<u>New International Application Filed with the USPTO as a Receiving Office</u>
If a new international application is being filed and the international application includes the necessary components for an international filing date (see PCT Article 11 and MPEP 1810), a Notification of the International Application Number and of the International Filing Date (Form PCT/RO/105) will be issued in due course, subject to prescriptions concerning national security, and the date shown on this Acknowledgement Receipt will establish the international filing date of the application.

UNITED STATES PATENT AND TRADEMARK OFFICE

UNITED STATES DEPARTMENT OF COMMERCE
United States Patent and Trademark Office
Address: COMMISSIONER FOR PATENTS
P.O. Box 1450
Alexandria, Virginia 22313-1450
www.uspto.gov

APPLICATION NO.	ISSUE DATE	PATENT NO.	ATTORNEY DOCKET NO.	CONFIRMATION NO.
13/321,792	10/08/2013	8554196	2799.737BS	5874

86636 7590 09/18/2013
BRUNDIDGE & STANGER, P.C.
2318 MILL ROAD, SUITE 1020
ALEXANDRIA, VA 22314

ISSUE NOTIFICATION

The projected patent number and issue date are specified above.

Determination of Patent Term Adjustment under 35 U.S.C. 154 (b)
(application filed on or after May 29, 2000)

The Patent Term Adjustment is 0 day(s). Any patent to issue from the above-identified application will include an indication of the adjustment on the front page.

If a Continued Prosecution Application (CPA) was filed in the above-identified application, the filing date that determines Patent Term Adjustment is the filing date of the most recent CPA.

Applicant will be able to obtain more detailed information by accessing the Patent Application Information Retrieval (PAIR) WEB site (http://pair.uspto.gov).

Any questions regarding the Patent Term Extension or Adjustment determination should be directed to the Office of Patent Legal Administration at (571)-272-7702. Questions relating to issue and publication fee payments should be directed to the Application Assistance Unit (AAU) of the Office of Data Management (ODM) at (571)-272-4200.

APPLICANT(s) (Please see PAIR WEB site http://pair.uspto.gov for additional applicants):

Ezekiel Kruglick, Poway, CA;

The United States represents the largest, most dynamic marketplace in the world and is an unparalleled location for business investment, innovation, and commercialization of new technologies. The USA offers tremendous resources and advantages for those who invest and manufacture goods here. Through SelectUSA, our nation works to encourage and facilitate business investment. To learn more about why the USA is the best country in the world to develop technology, manufacture products, and grow your business, visit SelectUSA.gov.

IR103 (Rev. 10/09)

PTO/SB/44 (09-07)
Approved for use through 08/31/2013. OMB 0651-0033
U.S. Patent and Trademark Office; U.S. DEPARTMENT OF COMMERCE
Under the Paperwork Reduction Act of 1995, no persons are required to respond to a collection of information unless it displays a valid OMB control number.
(Also Form PTO-1050)

UNITED STATES PATENT AND TRADEMARK OFFICE
CERTIFICATE OF CORRECTION

PATENT NO. : 8,554,196 B2

APPLICATION NO. : 13/321,792

ISSUE DATE : October 8, 2013

INVENTOR(S) : Kruglick

It is certified that an error appears or errors appear in the above-identified patent and that said Letters Patent is hereby corrected as shown below:

In Fig. 7, Sheet 7 of 7, delete "uP/uC/DSP" and insert - - μP/μC/DSP - -, therefor.

In Fig. 7, Sheet 7 of 7, in Box "(723)", in Lines 2-3,
delete "Updated Application Application" and insert - - Update Application - -, therefor.

In Column 6, Line 7, delete "may be ρ," and insert - - may be p, - -, therefor.

In Column 12, Line 28, delete "tower 120" and insert - - tower 125 - -, therefor.

In Column 15, Line 5, delete "medium 605," and insert - - medium 606, - -, therefor.

In Column 16, Line 34, delete "780 may include a serial interface controller 781" and insert - - 770 may include a serial interface controller 771 - -, therefor.

In Column 16, Line 35, delete "controller 782," and insert - - controller 772, - -, therefor.

MAILING ADDRESS OF SENDER (Please do not use customer number below):

Maschoff Brennan
1389 Center Drive, Suite 300
Park City, Utah 84098, United States

This collection of information is required by 37 CFR 1.322, 1.323, and 1.324. The information is required to obtain or retain a benefit by the public which is to file (and by the USPTO to process) an application. Confidentiality is governed by 35 U.S.C. 122 and 37 CFR 1.14. This collection is estimated to take 1.0 hour to complete, including gathering, preparing, and submitting the completed application form to the USPTO. Time will vary depending upon the individual case. Any comments on the amount of time you require to complete this form and/or suggestions for reducing this burden, should be sent to the Chief Information Officer, U.S. Patent and Trademark Office, U.S. Department of Commerce, P.O. Box 1450, Alexandria, VA 22313-1450. DO NOT SEND FEES OR COMPLETED FORMS TO THIS ADDRESS. **SEND TO: Attention Certificate of Corrections Branch, Commissioner for Patents, P.O. Box 1450, Alexandria, VA 22313-1450.**

If you need assistance in completing the form, call 1-800-PTO-9199 and select option 2.

PTO/SB/44 (09-07)
Approved for use through 08/31/2013. OMB 0651-0033
U.S. Patent and Trademark Office; U.S. DEPARTMENT OF COMMERCE
Under the Paperwork Reduction Act of 1995, no persons are required to respond to a collection of information unless it displays a valid OMB control number.
(Also Form PTO-1050)

UNITED STATES PATENT AND TRADEMARK OFFICE
CERTIFICATE OF CORRECTION

PATENT NO. : 8,554,196 B2

APPLICATION NO. : 13/321,792

ISSUE DATE : October 8, 2013

INVENTOR(S) : Kruglick

It is certified that an error appears or errors appear in the above-identified patent and that said Letters Patent is hereby corrected as shown below:

In Column 16, Line 40, delete “ports 783.” and insert - - ports 773. - -, therefor.

In Column 16, Line 43, delete “devices 783” and insert - - devices 790 - -, therefor.

In Column 17, Line 56, delete “and or” and insert - - and/or - -, therefor.

In Column 22, Line 40, in Claim 26, delete “an Really” and insert - - Really - -, therefor.

MAILING ADDRESS OF SENDER (Please do not use customer number below):

Maschoff Brennan
1389 Center Drive, Suite 300
Park City, Utah 84098, United States

This collection of information is required by 37 CFR 1.322, 1.323, and 1.324. The information is required to obtain or retain a benefit by the public which is to file (and by the USPTO to process) an application. Confidentiality is governed by 35 U.S.C. 122 and 37 CFR 1.14. This collection is estimated to take 1.0 hour to complete, including gathering, preparing, and submitting the completed application form to the USPTO. Time will vary depending upon the individual case. Any comments on the amount of time you require to complete this form and/or suggestions for reducing this burden, should be sent to the Chief Information Officer, U.S. Patent and Trademark Office, U.S. Department of Commerce, P.O. Box 1450, Alexandria, VA 22313-1450. DO NOT SEND FEES OR COMPLETED FORMS TO THIS ADDRESS. **SEND TO: Attention Certificate of Corrections Branch, Commissioner for Patents, P.O. Box 1450, Alexandria, VA 22313-1450.**

If you need assistance in completing the form, call 1-800-PTO-9199 and select option 2.

Privacy Act Statement

The **Privacy Act of 1974 (P.L. 93-579)** requires that you be given certain information in connection with your submission of the attached form related to a patent application or patent. Accordingly, pursuant to the requirements of the Act, please be advised that: (1) the general authority for the collection of this information is 35 U.S.C. 2(b)(2); (2) furnishing of the information solicited is voluntary; and (3) the principal purpose for which the information is used by the U.S. Patent and Trademark Office is to process and/or examine your submission related to a patent application or patent. If you do not furnish the requested information, the U.S. Patent and Trademark Office may not be able to process and/or examine your submission, which may result in termination of proceedings or abandonment of the application or expiration of the patent.

The information provided by you in this form will be subject to the following routine uses:

1. The information on this form will be treated confidentially to the extent allowed under the Freedom of Information Act (5 U.S.C. 552) and the Privacy Act (5 U.S.C 552a). Records from this system of records may be disclosed to the Department of Justice to determine whether disclosure of these records is required by the Freedom of Information Act.
2. A record from this system of records may be disclosed, as a routine use, in the course of presenting evidence to a court, magistrate, or administrative tribunal, including disclosures to opposing counsel in the course of settlement negotiations.
3. A record in this system of records may be disclosed, as a routine use, to a Member of Congress submitting a request involving an individual, to whom the record pertains, when the individual has requested assistance from the Member with respect to the subject matter of the record.
4. A record in this system of records may be disclosed, as a routine use, to a contractor of the Agency having need for the information in order to perform a contract. Recipients of information shall be required to comply with the requirements of the Privacy Act of 1974, as amended, pursuant to 5 U.S.C. 552a(m).
5. A record related to an International Application filed under the Patent Cooperation Treaty in this system of records may be disclosed, as a routine use, to the International Bureau of the World Intellectual Property Organization, pursuant to the Patent Cooperation Treaty.
6. A record in this system of records may be disclosed, as a routine use, to another federal agency for purposes of National Security review (35 U.S.C. 181) and for review pursuant to the Atomic Energy Act (42 U.S.C. 218(c)).
7. A record from this system of records may be disclosed, as a routine use, to the Administrator, General Services, or his/her designee, during an inspection of records conducted by GSA as part of that agency's responsibility to recommend improvements in records management practices and programs, under authority of 44 U.S.C. 2904 and 2906. Such disclosure shall be made in accordance with the GSA regulations governing inspection of records for this purpose, and any other relevant (*i.e.*, GSA or Commerce) directive. Such disclosure shall not be used to make determinations about individuals.
8. A record from this system of records may be disclosed, as a routine use, to the public after either publication of the application pursuant to 35 U.S.C. 122(b) or issuance of a patent pursuant to 35 U.S.C. 151. Further, a record may be disclosed, subject to the limitations of 37 CFR 1.14, as a routine use, to the public if the record was filed in an application which became abandoned or in which the proceedings were terminated and which application is referenced by either a published application, an application open to public inspection or an issued patent.
9. A record from this system of records may be disclosed, as a routine use, to a Federal, State, or local law enforcement agency, if the USPTO becomes aware of a violation or potential violation of law or regulation.

IN THE UNITED STATES PATENT & TRADEMARK OFFICE

PATENT NO.: 8,554,196

USPTO CONFIRMATION CODE: 5874

APPLICATION NO.: 13/321,792

PCT FILED: August 24, 2011

U.S. FILED: November 21, 2011

EXAMINER: Sam Bhattacharya

GROUP ART UNIT: 2646

FOR: NETWORK COVERAGE BY CYCLING THROUGH BEAM SHAPE COVERAGE CONFIGURATIONS

37 CFR 1.322 & 37 CFR 1.323 REQUEST FOR CERTIFICATE OF CORRECTION FOR USPTO AND/OR APPLICANT MISTAKE

Commissioner for Patents
Office of Patent Publication
ATTN: Certificate of Correction Branch
P.O. Box 1450
Alexandria, VA 22313-1450

Dear Sir:

A certificate of correction under 35 USC 254 is respectfully requested in the above-identified patent.

It is believed that all errors identified herein were the fault of applicant, please charge **$100.00** to the credit card utilized for this certificate of correction filing. In the event that a further fee is required, please charge the amount to the same credit card.

The exact locations where the errors appear in the patent and patent application are as follows:

In Fig. 7, Sheet 7 of 7, delete "uP/uC/DSP" and insert - - μP/μC/DSP - -, therefor.
(REPLACEMENT DRAWING DATED FEBRUARY 15, 2013, SHEET 1 (PAGE 49 OF FW), FIGURE 7)

In Fig. 7, Sheet 7 of 7, in Box "(723)", in Lines 2-3, delete "Updated Application Application" and insert - - Update Application - -, therefor.
(REPLACEMENT DRAWING DATED FEBRUARY 15, 2013, SHEET 1 (PAGE 49 OF FW), FIGURE 7, BOX "(723)", LINES 2-3)

In Column 6, Line 7, delete "may be ρ," and insert - - may be p, - -, therefor.
(ORIGINALLY FILED SPECIFICATION DATED JUNE 29, 2012, PAGE 14, LINE 2)

In Column 12, Line 28, delete "tower 120" and insert - - tower 125 - -, therefor.
(ORIGINALLY FILED SPECIFICATION DATED JUNE 29, 2012, PAGE 27, PARAGRAPH [0048], LINE 4)

In Column 15, Line 5, delete "medium 605," and insert - - medium 606, - -, therefor.
(ORIGINALLY FILED SPECIFICATION DATED JUNE 29, 2012, PAGE 33, PARAGRAPH [0059], LINE 2)

In Column 16, Line 34, delete "780 may include a serial interface controller 781" and insert - - 770 may include a serial interface controller 771 - -, therefor.
(ORIGINALLY FILED SPECIFICATION DATED JUNE 29, 2012, PAGES 36 & 37, PARAGRAPH [0065], LINES 8 & 1)

In Column 16, Line 35, delete "controller 782," and insert - - controller 772, - -, therefor.
(ORIGINALLY FILED SPECIFICATION DATED JUNE 29, 2012, PAGE 37, LINE 1)

In Column 16, Line 40, delete "ports 783." and insert - - ports 773. - -, therefor.
(ORIGINALLY FILED SPECIFICATION DATED JUNE 29, 2012, PAGE 37, LINE 4)

In Column 16, Line 43, delete "devices 783" and insert - - devices 790 - -, therefor.
(ORIGINALLY FILED SPECIFICATION DATED JUNE 29, 2012, PAGE 37, LINE 7)

In Column 17, Line 56, delete "and or" and insert - - and/or - -, therefor.
(ORIGINALLY FILED SPECIFICATION DATED JUNE 29, 2012, PAGE 39, PARAGRAPH [0068], LINE 19)

In Column 22, Line 40, in Claim 26, delete "an Really" and insert - - Really - -, therefor.

(AMENDMENTS TO THE CLAIMS DATED FEBRUARY 15, 2013, PAGE 10, CLAIM 26, LINE 2)

The requested corrections are attached on Form PTO/SB/44.

Dated this 12th day of March, 2014.

Respectfully Submitted,

/R. Burns Israelsen/ Reg. # 42,685
R. BURNS ISRAELSEN
Acting in Representative Capacity
(37 CFR 1.34)
Registration No. 42,685
Telephone No. (435) 252-1360

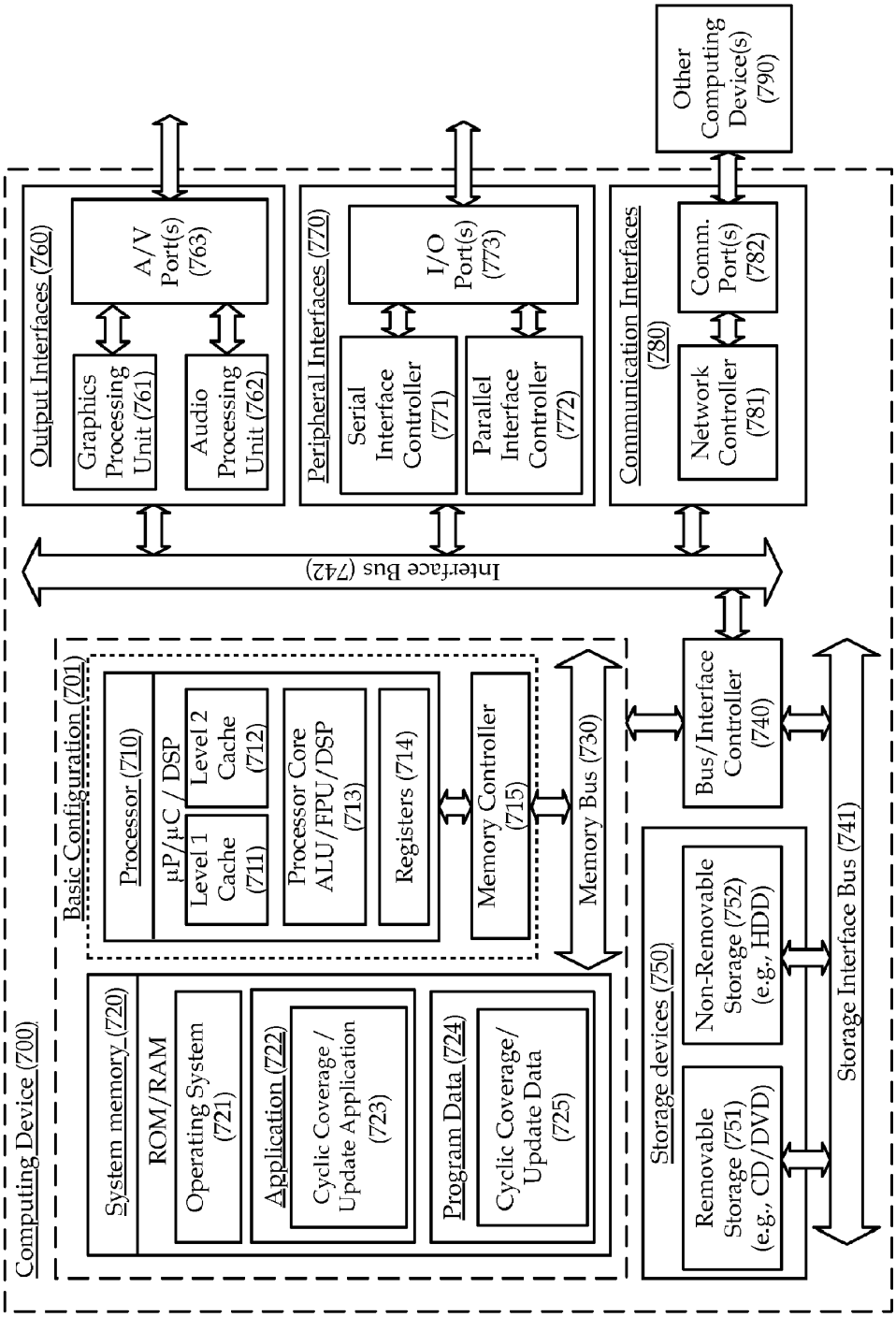
Computing Device (700)
Basic Configuration (701)
Processor (710)
μP/μC / DSP
Level 1 Cache (711)
Level 2 Cache (712)
Processor Core ALU/FPU/DSP (713)
Registers (714)
Memory Controller (715)
Memory Bus (730)
System memory (720)
ROM/RAM
Operating System (721)
Application (722)
Cyclic Coverage / Update Application (723)
Program Data (724)
Cyclic Coverage/ Update Data (725)
Storage devices (750)
Removable Storage (751) (e.g., CD/DVD)
Non-Removable Storage (752) (e.g., HDD)
Storage Interface Bus (741)
Bus/Interface Controller (740)
Interface Bus (742)
Output Interfaces (760)
Graphics Processing Unit (761)
A/V Port(s) (763)
Audio Processing Unit (762)
Peripheral Interfaces (770)
Serial Interface Controller (771)
I/O Port(s) (773)
Parallel Interface Controller (772)
Communication Interfaces (780)
Network Controller (781)
Comm. Port(s) (782)
Other Computing Device(s) (790)

FIG. 7

Electronic Patent Application Fee Transmittal

Application Number:	13321792
Filing Date:	21-Nov-2011
Title of Invention:	NETWORK COVERAGE BY CYCLING THROUGH BEAM SHAPE COVERAGE CONFIGURATIONS
First Named Inventor/Applicant Name:	Ezekiel Kruglick
Filer:	Robert Burns Israelsen/Jeffrey Woodward
Attorney Docket Number:	2799.737BS

Filed as Large Entity

U.S. National Stage under 35 USC 371 Filing Fees

Description	Fee Code	Quantity	Amount	Sub-Total in USD($)
Basic Filing:				
Pages:				
Claims:				
Miscellaneous-Filing:				
Petition:				
Patent-Appeals-and-Interference:				
Post-Allowance-and-Post-Issuance:				
Certificate of Correction	1811	1	100	100
Extension-of-Time:				

Description	Fee Code	Quantity	Amount	Sub-Total in USD($)
Miscellaneous:				
		Total in USD ($)		**100**

Electronic Acknowledgement Receipt

EFS ID:	18443257
Application Number:	13321792
International Application Number:	
Confirmation Number:	5874
Title of Invention:	NETWORK COVERAGE BY CYCLING THROUGH BEAM SHAPE COVERAGE CONFIGURATIONS
First Named Inventor/Applicant Name:	Ezekiel Kruglick
Customer Number:	86636
Filer:	Robert Burns Israelsen/Jeffrey Woodward
Filer Authorized By:	Robert Burns Israelsen
Attorney Docket Number:	2799.737BS
Receipt Date:	12-MAR-2014
Filing Date:	21-NOV-2011
Time Stamp:	12:12:14
Application Type:	U.S. National Stage under 35 USC 371

Payment information:

Submitted with Payment	yes
Payment Type	Credit Card
Payment was successfully received in RAM	$100
RAM confirmation Number	9728
Deposit Account	
Authorized User	

File Listing:

Document Number	Document Description	File Name	File Size(Bytes)/ Message Digest	Multi Part /.zip	Pages (if appl.)

1	Request for Certificate of Correction	US-813897-02-US-NAT_2014-03-12_CoC.pdf	267930 a88b76d13d051a7848780e03db48d0a5895bb44b	no	3
Warnings:					
Information:					
2	Request for Certificate of Correction	US-813897-02-US-NAT_2014-03-12_Request_Letter.pdf	151361 770e9a6fa82d6626fb3d0596ab6a88ec2b3c727a	no	3
Warnings:					
Information:					
3	Miscellaneous Incoming Letter	US-813897-02-US-NAT_2014-03-12_Replacement_Sheet.pdf	111756 dd6a35a79cbcfe88bdb74c24e505eab6575bdaea	no	1
Warnings:					
Information:					
4	Fee Worksheet (SB06)	fee-info.pdf	30425 4c36f560a2a2899e19498e406afbd8c95dca2947	no	2
Warnings:					
Information:					
		Total Files Size (in bytes):	561472		

This Acknowledgement Receipt evidences receipt on the noted date by the USPTO of the indicated documents, characterized by the applicant, and including page counts, where applicable. It serves as evidence of receipt similar to a Post Card, as described in MPEP 503.

<u>New Applications Under 35 U.S.C. 111</u>
If a new application is being filed and the application includes the necessary components for a filing date (see 37 CFR 1.53(b)-(d) and MPEP 506), a Filing Receipt (37 CFR 1.54) will be issued in due course and the date shown on this Acknowledgement Receipt will establish the filing date of the application.

<u>National Stage of an International Application under 35 U.S.C. 371</u>
If a timely submission to enter the national stage of an international application is compliant with the conditions of 35 U.S.C. 371 and other applicable requirements a Form PCT/DO/EO/903 indicating acceptance of the application as a national stage submission under 35 U.S.C. 371 will be issued in addition to the Filing Receipt, in due course.

<u>New International Application Filed with the USPTO as a Receiving Office</u>
If a new international application is being filed and the international application includes the necessary components for an international filing date (see PCT Article 11 and MPEP 1810), a Notification of the International Application Number and of the International Filing Date (Form PCT/RO/105) will be issued in due course, subject to prescriptions concerning national security, and the date shown on this Acknowledgement Receipt will establish the international filing date of the application.

UNITED STATES PATENT AND TRADEMARK OFFICE

CERTIFICATE OF CORRECTION

PATENT NO. : 8,554,196 B2
APPLICATION NO. : 13/321792
DATED : October 8, 2013
INVENTOR(S) : Kruglick

It is certified that error appears in the above-identified patent and that said Letters Patent is hereby corrected as shown below:

In the Drawings:

In Fig. 7, Sheet 7 of 7, delete "uP/uC/DSP" and insert -- μP/μC/DSP --, therefor.

In Fig. 7, Sheet 7 of 7, in Box "(723)", in Lines 2-3, delete "Updated Application Application" and insert -- Update Application --, therefor.

In the Specification:

In Column 6, Line 7, delete "may be ρ," and insert -- may be p, --, therefor.

In Column 12, Line 28, delete "tower 120" and insert -- tower 125 --, therefor.

In Column 15, Line 5, delete "medium 605," and insert -- medium 606, --, therefor.

In Column 16, Line 34, delete "780 may include a serial interface controller 781" and insert -- 770 may include a serial interface controller 771 --, therefor.

In Column 16, Line 35, delete "controller 782," and insert -- controller 772, --, therefor.

In Column 16, Line 40, delete "ports 783." and insert -- ports 773. --, therefor.

In Column 16, Line 43, delete "devices 783" and insert -- devices 790 --, therefor.

In Column 17, Line 56, delete "and or" and insert -- and/or --, therefor.

In the Claims:

In Column 22, Line 40, in Claim 26, delete "an Really" and insert -- Really --, therefor.

Signed and Sealed this
Twenty-seventh Day of May, 2014

Michelle K. Lee

Michelle K. Lee
Deputy Director of the United States Patent and Trademark Office