US009094888B2

(12) **United States Patent**
Kruglick

(10) **Patent No.: US 9,094,888 B2**
(45) **Date of Patent: Jul. 28, 2015**

(54) **WIRELESS DEVICE HANDOFF BETWEEN WIRELESS NETWORKS**

(75) Inventor: **Ezekiel Kruglick**, Poway, CA (US)

(73) Assignee: **EMPIRE TECHNOLOGY DEVELOPMENT LLC**, Wilmington, DE (US)

(*) Notice: Subject to any disclaimer, the term of this patent is extended or adjusted under 35 U.S.C. 154(b) by 384 days.

(21) Appl. No.: **13/263,835**

(22) PCT Filed: **Apr. 29, 2011**

(86) PCT No.: **PCT/US2011/034470**

§ 371 (c)(1),
(2), (4) Date: **Oct. 10, 2011**

(87) PCT Pub. No.: **WO2012/148410**

PCT Pub. Date: **Nov. 1, 2012**

(65) **Prior Publication Data**

US 2012/0276901 A1 Nov. 1, 2012

(51) **Int. Cl.**

H04W 36/00	(2009.01)
H04W 36/32	(2009.01)
H04W 16/28	(2009.01)

(52) **U.S. Cl.**

CPC ***H04W 36/32*** (2013.01); *H04W 16/28* (2013.01); *H04W 36/0055* (2013.01)

(58) **Field of Classification Search**

CPC H04W 36/32; H04W 36/30; H04W 36/18; H04W 36/08; H04W 36/14; H04W 36/12

USPC 455/436–443, 67.11, 226.2

See application file for complete search history.

(56) **References Cited**

U.S. PATENT DOCUMENTS

6,438,389	B1	8/2002	Sandhu et al.	
6,829,481	B2	12/2004	Souissi	
2002/0187780	A1	12/2002	Souissi	
2006/0148451	A1	7/2006	Narasimha	
2007/0021119	A1	1/2007	Lee et al.	
2008/0076430	A1	3/2008	Olson	
2008/0273506	A1	11/2008	Kezys	
2008/0310371	A1	12/2008	Russell	
2009/0017823	A1	1/2009	Sachs et al.	
2009/0111469	A1	4/2009	Lee et al.	
2010/0093354	A1 *	4/2010	Agashe et al.	455/436
2012/0149430	A1 *	6/2012	Siomina et al.	455/525
2013/0107865	A1 *	5/2013	Diachina et al.	370/331
2014/0169267	A1 *	6/2014	Zhang et al.	370/315

FOREIGN PATENT DOCUMENTS

EP	1643785	A1	4/2006
JP	2006086910	A	3/2006

(Continued)

OTHER PUBLICATIONS

Australia Patent Office, International Search Report and Written Opinion of the International Searching Authority for PCT/US2011/034470, prepared on Jul. 27, 2011, Australia.

Cheng, Sheng-Tzong et al., IPv6-based dynamic coordinated call admission control mechanism over integrated wireless networks, IEEE Journal on Selected Areas in Communications 23, No. 11 (Nov. 2005): pp. 2093-2103.

(Continued)

Primary Examiner — Temica M Beamer

(74) *Attorney, Agent, or Firm* — Brundidge & Stanger, P.C.

(57) **ABSTRACT**

Examples are disclosed for a wireless device handoff between a first wireless network and a second wireless network.

29 Claims, 9 Drawing Sheets

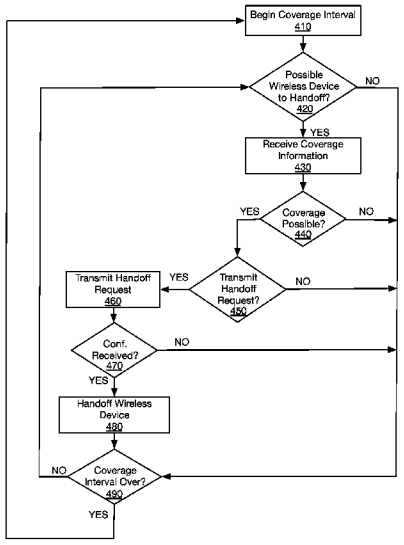

(56) **References Cited**

FOREIGN PATENT DOCUMENTS

JP	2008252330	A	10/2008
KR	1020060038729	A	5/2006
KR	1020090041777	A	4/2009
WO	2007066882	A1	6/2007
WO	2010121885	A1	10/2010
WO	2010123417	A1	10/2010

OTHER PUBLICATIONS

Mohanty, S. et al., A cross-layer (layer 2+ 3) handoff management protocol for next-generation wireless systems, IEEE Transactions on Mobile Computing 5, No. 10 (2006): 1347-1360.

Ferrus, R., Vertical handover support in coordinated heterogeneous radio access networks, Proceedings of the 14th IST Mobile and Wireless Communications Summit, Jun. 2005, Dresden, Germany, accessed online via http://www.eurasip.org/Proceedings/Ext/IST05/papers/430.pdf on Oct. 10, 2011.

* cited by examiner

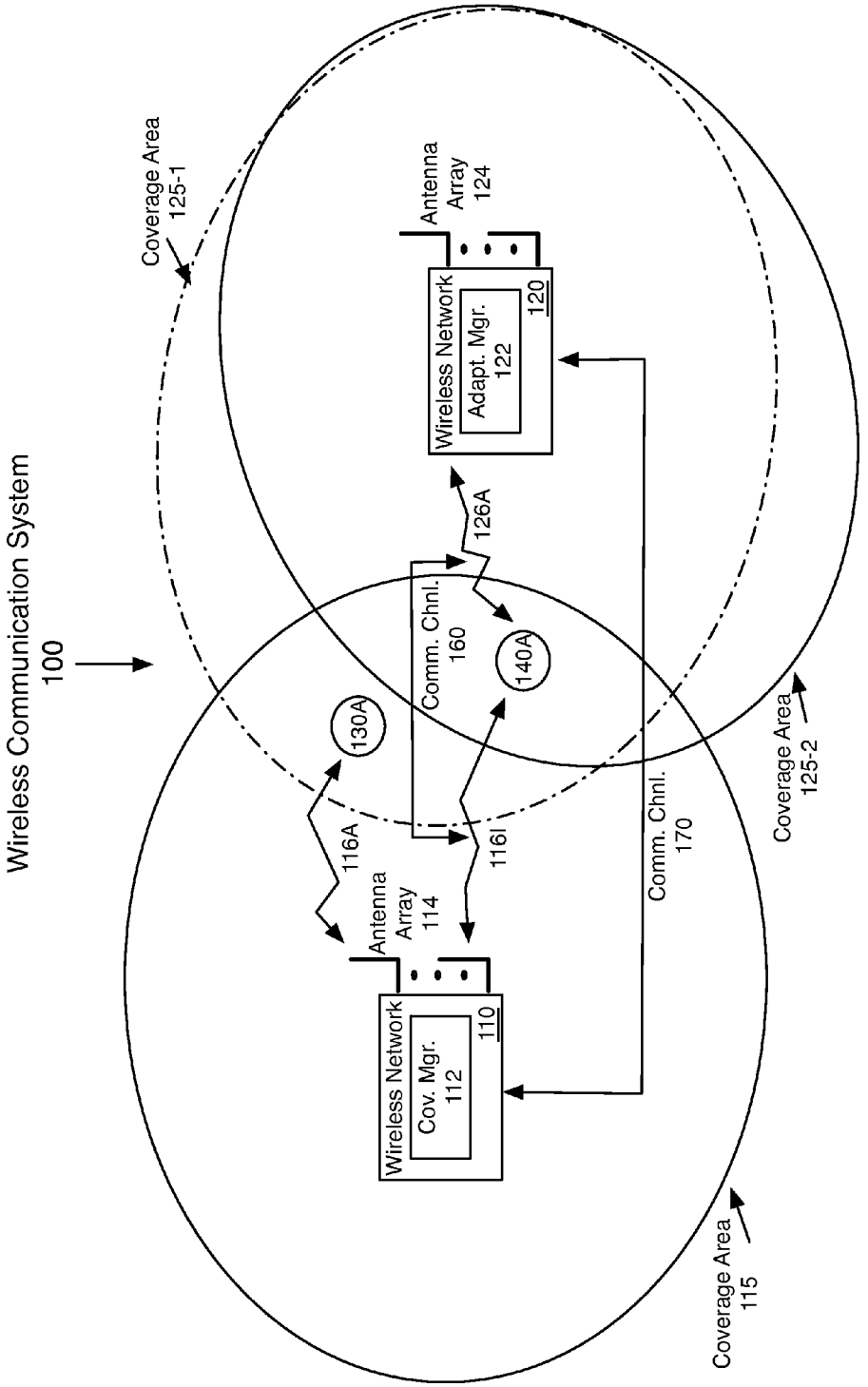
Wireless Communication System
100
Coverage Area
125-1
Antenna
Array
124
Wireless Network
120
Adapt. Mgr.
122
126A
Comm. Chnl.
160
140A
130A
116A
116I
Antenna
Array
114
Wireless Network
110
Cov. Mgr.
112
Comm. Chnl.
170
Coverage Area
125-2
Coverage Area
115

FIG. 1A

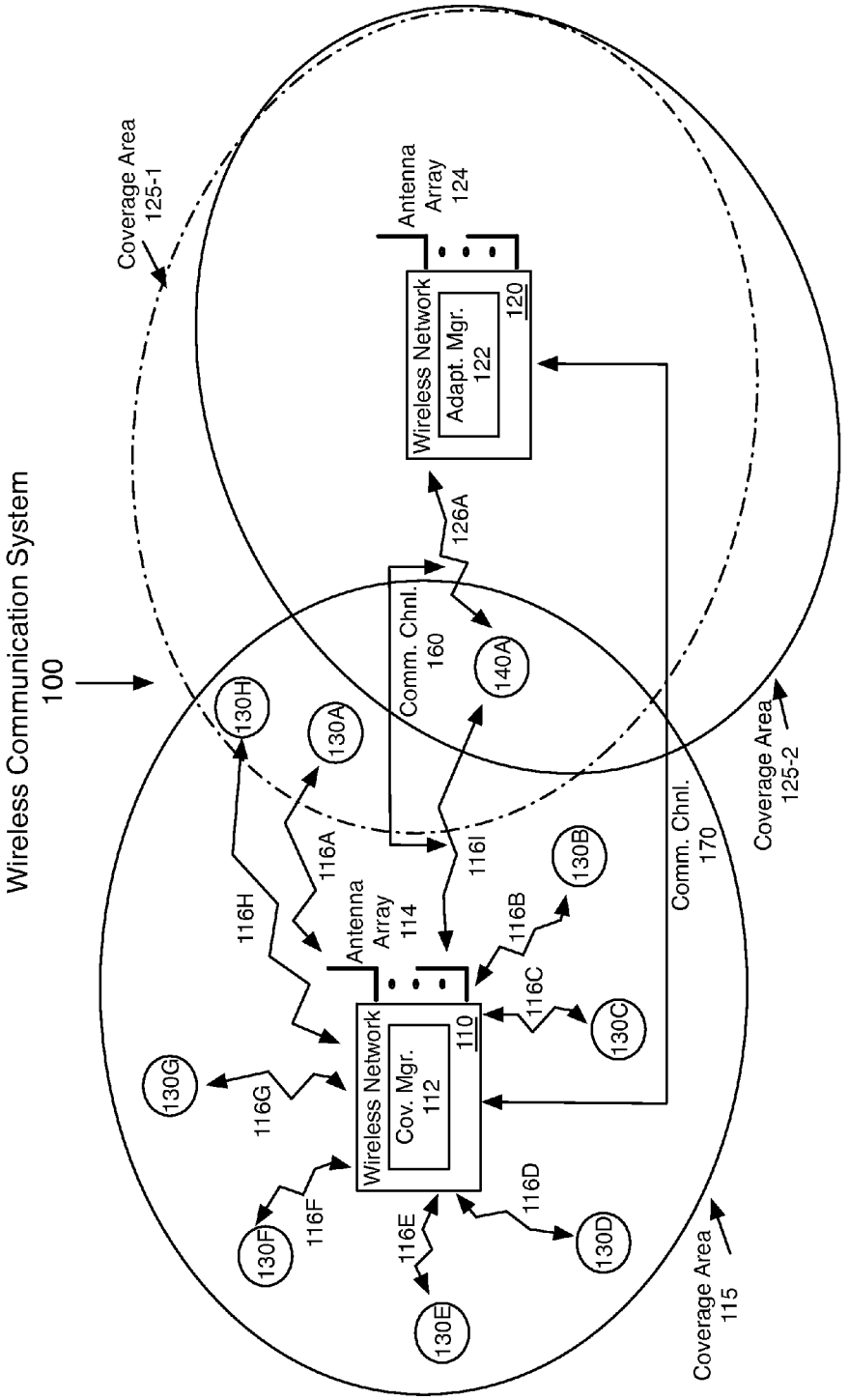
Wireless Communication System
100
Coverage Area
125-1
Antenna
Array
124
Wireless Network
120
Adapt. Mgr.
122
126A
Comm. Chnl.
160
140A
130H
130A
116A
116H
Antenna
Array
114
116I
130B
116B
116C
130C
Comm. Chnl.
170
Coverage Area
125-2
130G
116G
Wireless Network
110
Cov. Mgr.
112
116F
130F
116E
130E
116D
130D
Coverage Area
115

FIG. 1B

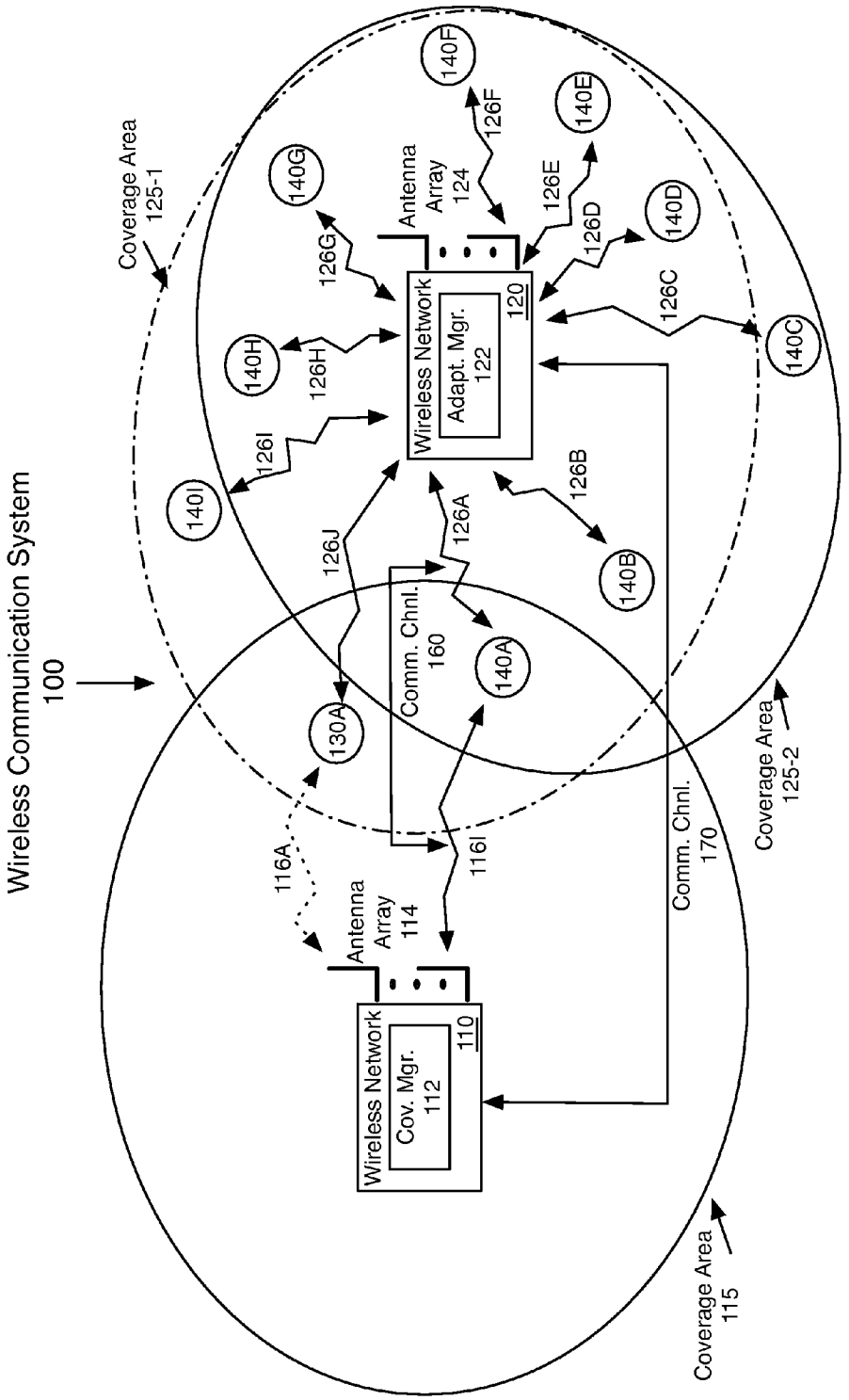
Wireless Communication System
100
Coverage Area
125-1
Coverage Area
125-2
Coverage Area
115
Wireless Network
Adapt. Mgr.
122
120
Antenna
Array
124
Wireless Network
Cov. Mgr.
112
110
Antenna
Array
114
Comm. Chnl.
160
Comm. Chnl.
170
126A
126B
126C
126D
126E
126F
126G
126H
126I
126J
116A
116I
130A
140A
140B
140C
140D
140E
140F
140G
140H
140I

FIG. 1C

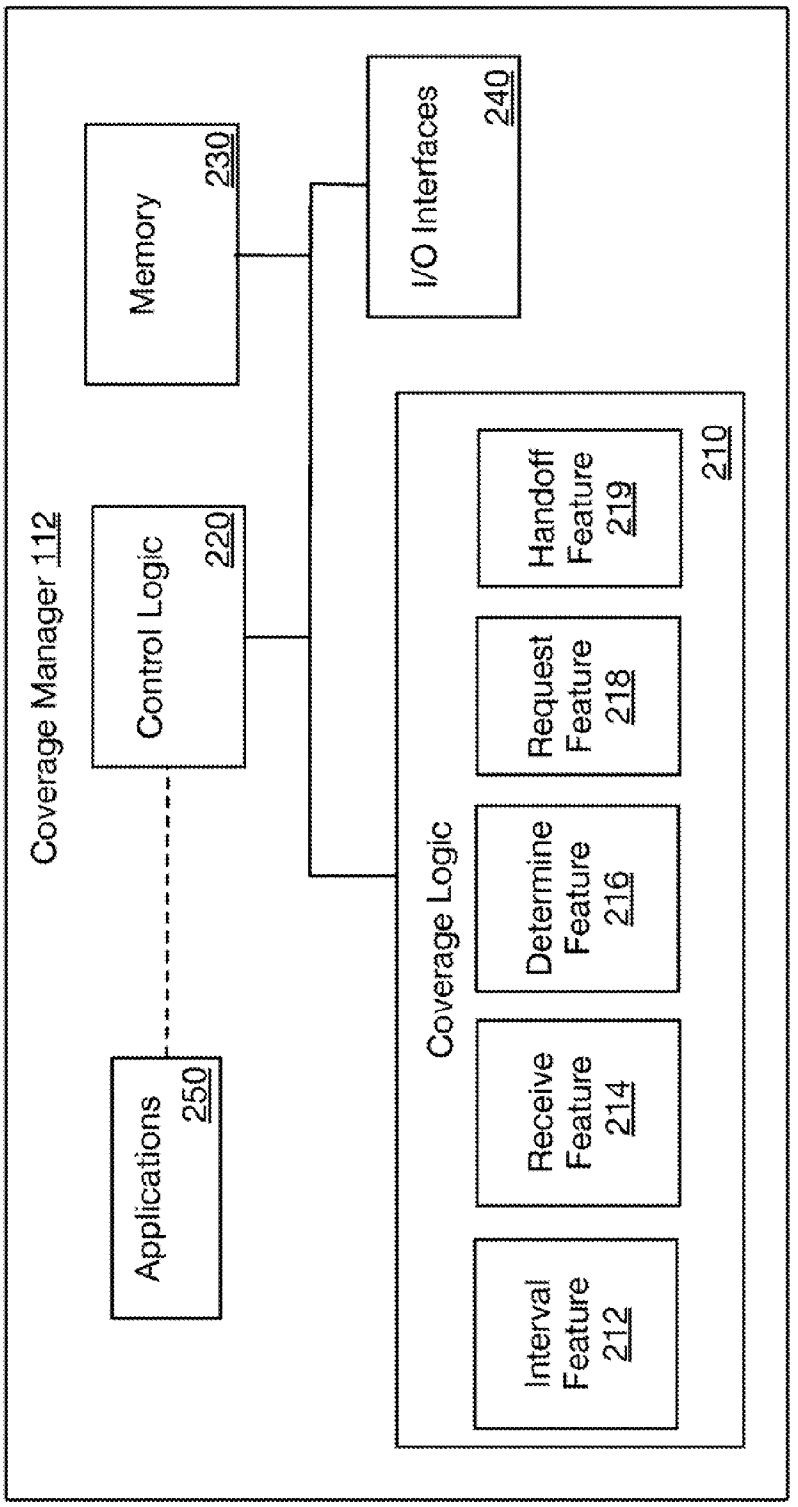
Coverage Manager 112
Memory 230
I/O Interfaces 240
Control Logic 220
Applications 250
Coverage Logic 210
Interval Feature 212
Receive Feature 214
Determine Feature 216
Request Feature 218
Handoff Feature 219

FIG. 2

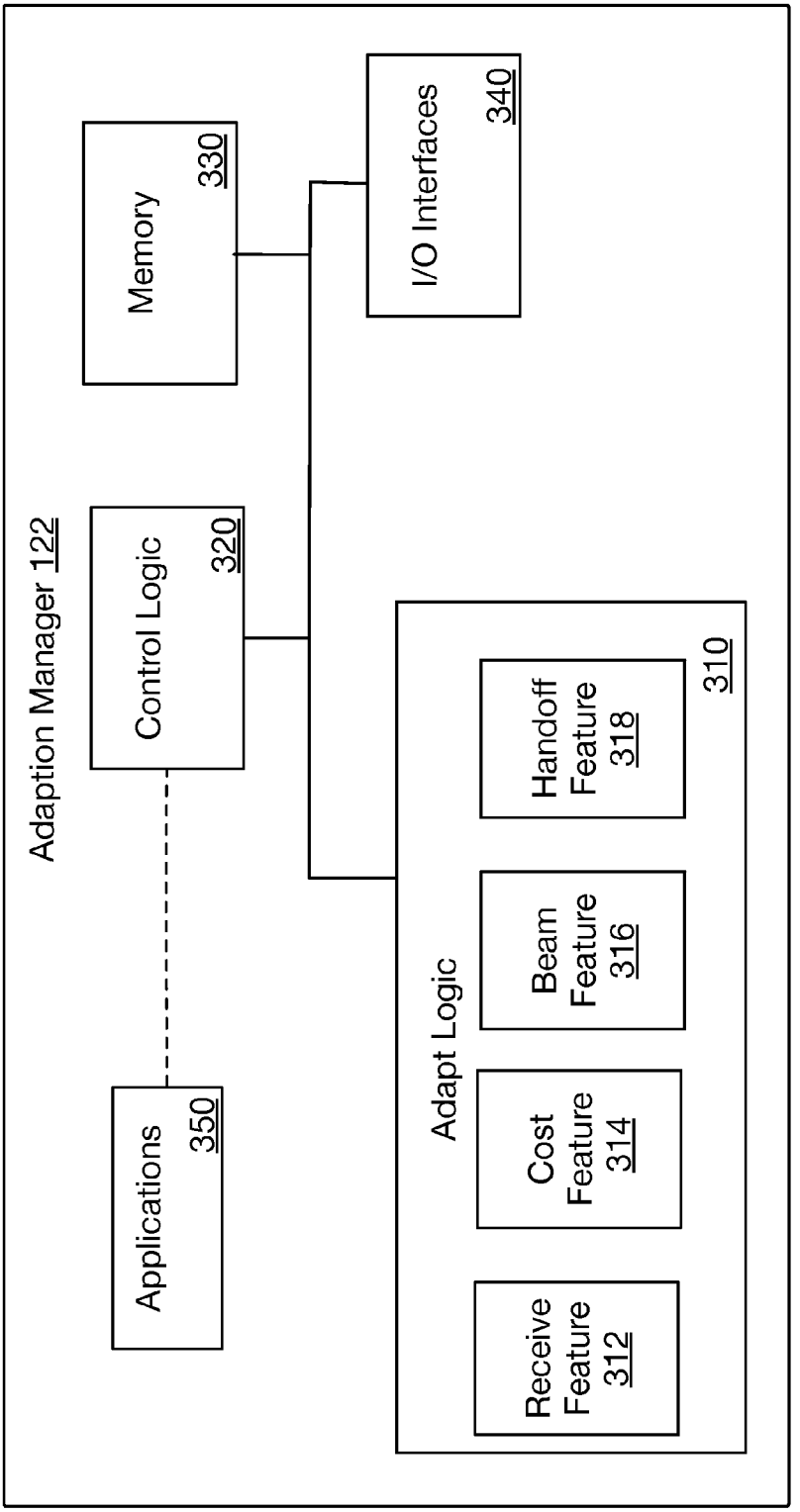
Adaption Manager 122
Memory
330
I/O Interfaces
340
Control Logic
320
Applications
350
Adapt Logic
310
Receive Feature 312
Cost Feature 314
Beam Feature 316
Handoff Feature 318

FIG. 3

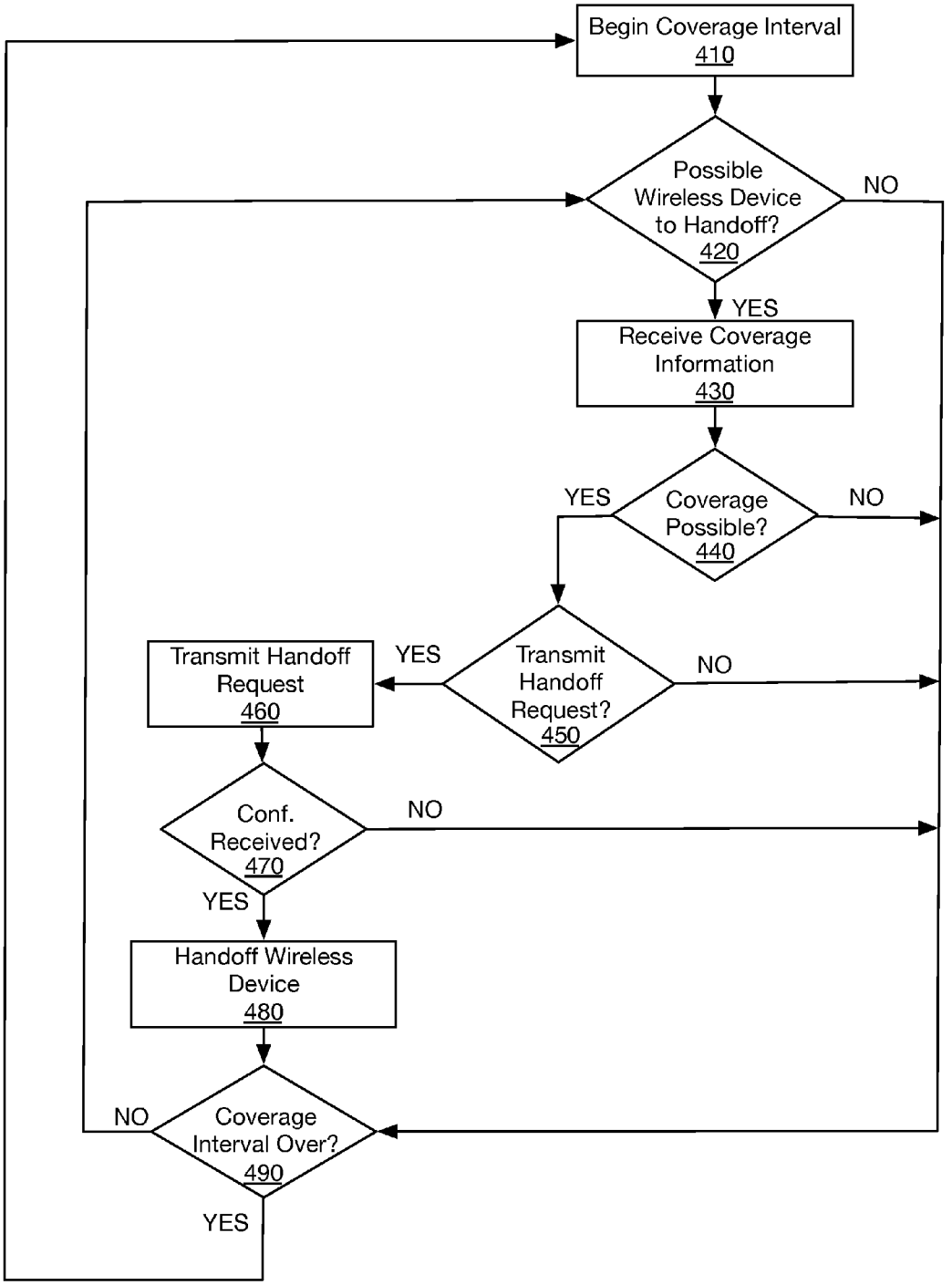
Begin Coverage Interval
410
Possible Wireless Device to Handoff?
420
NO
YES
Receive Coverage Information
430
YES
Coverage Possible?
440
NO
Transmit Handoff Request
460
YES
Transmit Handoff Request?
450
NO
Conf. Received?
470
NO
YES
Handoff Wireless Device
480
NO
Coverage Interval Over?
490
YES

FIG.4

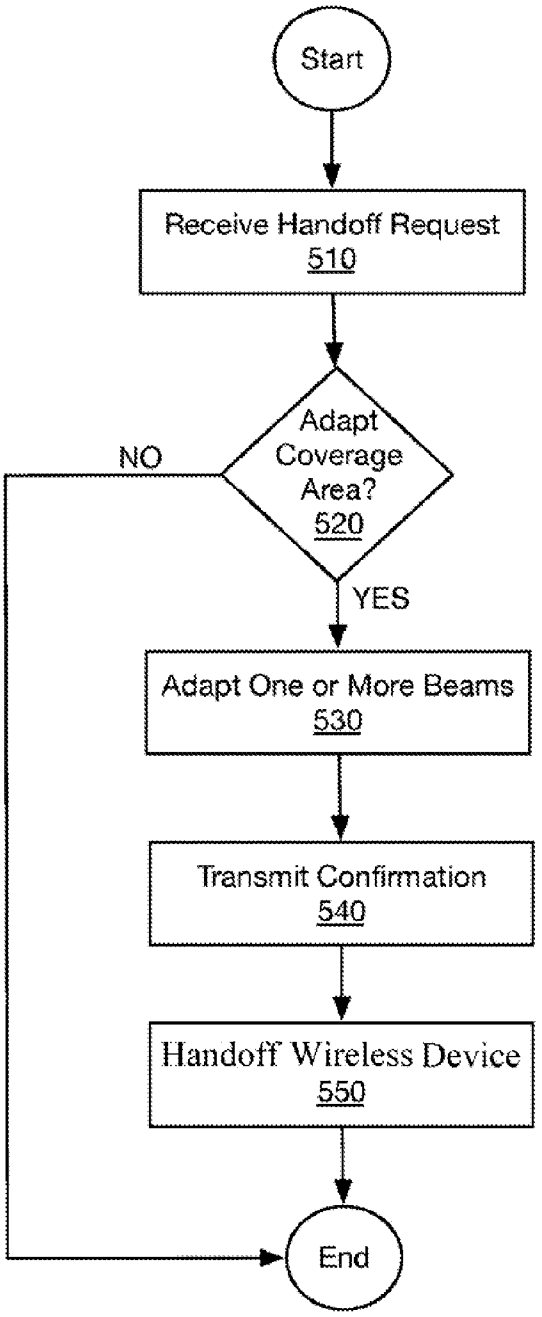
Start
Receive Handoff Request
510
Adapt Coverage Area?
520
NO
YES
Adapt One or More Beams
530
Transmit Confirmation
540
Handoff Wireless Device
550
End

FIG.5

600 A computer program product.

602 A signal bearing medium.

604 instructions for a first wireless network to handoff a wireless device to a second wireless network, which, when executed by logic, cause the logic to:

receive coverage information associated with the wireless device;

determine whether the wireless device is possibly covered by the second wireless network based, at least in part, on the coverage information; or

transmit a handoff request to the second wireless network based, at least in part, on a determination that the wireless device is possibly covered by the second wireless network.

606 a computer-readable medium.

608 a recordable medium.

610 a communications medium.

FIG. 6

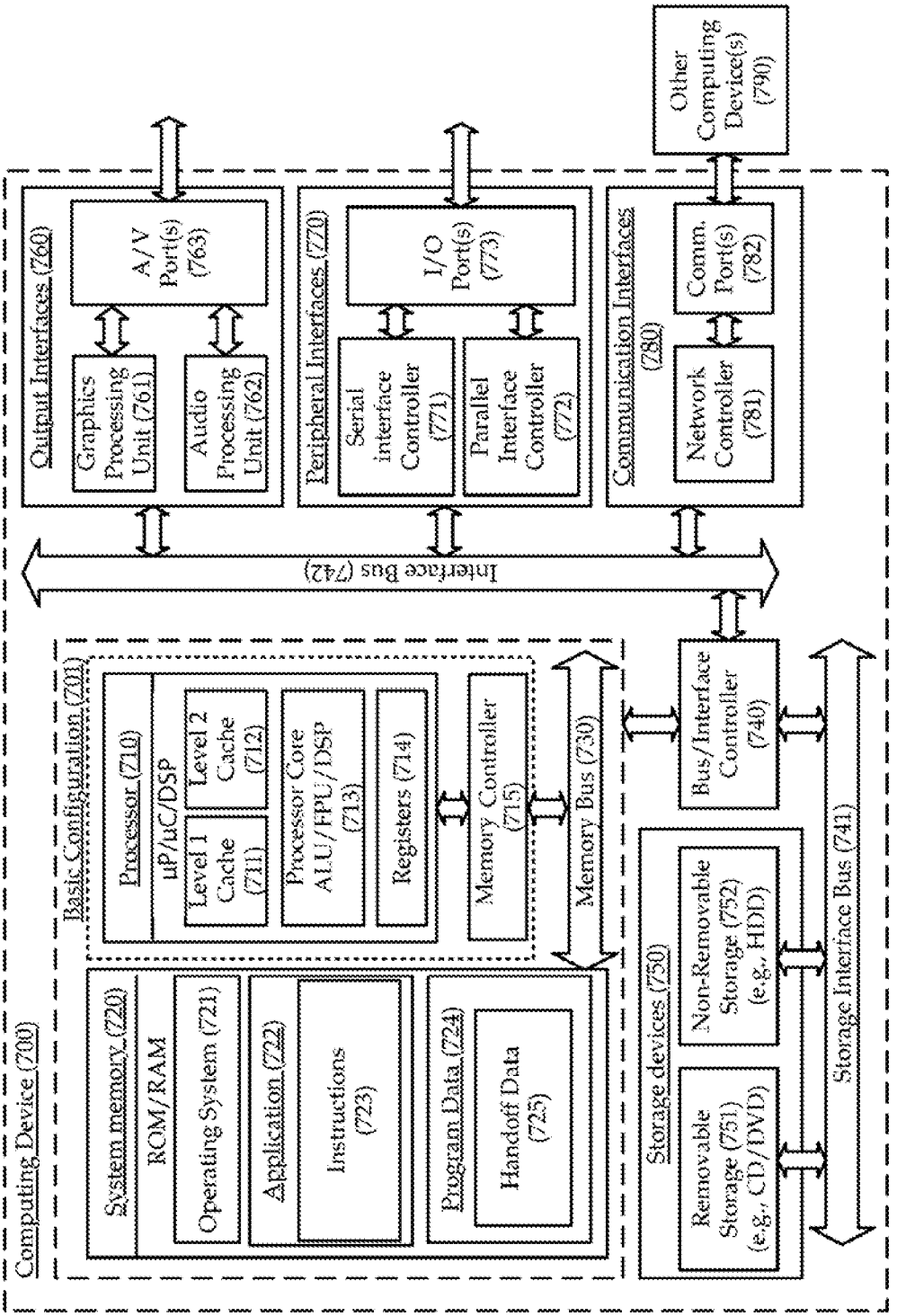
Computing Device (700)
Basic Configuration (701)
Processor (710)
µP/µC/DSP
Level 1 Cache (711)
Level 2 Cache (712)
Processor Core ALU/FPU/DSP (713)
Registers (714)
Memory Controller (715)
Memory Bus (730)
System memory (720)
ROM/RAM
Operating System (721)
Application (722)
Instructions (723)
Program Data (724)
Handoff Data (725)
Storage devices (750)
Removable Storage (751) (e.g., CD/DVD)
Non-Removable Storage (752) (e.g., HDD)
Storage Interface Bus (741)
Bus/Interface Controller (740)
Interface Bus (742)
Output Interfaces (760)
Graphics Processing Unit (761)
Audio Processing Unit (762)
A/V Port(s) (763)
Peripheral Interfaces (770)
Serial interface Controller (771)
Parallel Interface Controller (772)
I/O Port(s) (773)
Communication Interfaces (780)
Network Controller (781)
Comm. Port(s) (782)
Other Computing Device(s) (790)

FIG. 7

WIRELESS DEVICE HANDOFF BETWEEN WIRELESS NETWORKS

CROSS-REFERENCE TO RELATED APPLICATIONS

This Application is the National Stage filing under 35 U.S.C. §371 of PCT Application Ser. No. PCT/US2011/034470 filed on Apr. 29, 2011.

BACKGROUND

Unless otherwise indicated herein, the approaches described in this section are not prior art to the claims in this application and are not admitted to be prior art by inclusion in this section.

Complex wireless communication systems may be deployed such that coverage areas for different types of wireless networks ("heterogeneous wireless networks") included in the wireless communication systems may at least temporarily overlay or overlap. These complex wireless communication systems may include at least some wireless networks using adaptive antenna capabilities to allow for active beamforming. The active beamforming, for example, may be in response to user traffic patterns and other system management strategies. Also, some wireless networks may include towers with antenna arrays having dozens of constantly changing sectors of coverage due to active beamforming. As a result of the constantly changing sectors of coverage, a wireless device may able to detect a wireless network at a location at a given period of time. But as the sectors of coverage change, the wireless device may no longer detect the wireless network at the same location at another given period of time.

SUMMARY

The present disclosure describes example methods to be implemented at a first wireless network to handoff a wireless device to a second wireless network. The methods may include receiving coverage information associated with the wireless device and determining whether the wireless device is capable of being covered by the second wireless network based, at least in part, on the received coverage information. A handoff request may then be transmitted to the second wireless network based, at least in part, on the determination that the wireless device is capable of being covered by the second wireless network.

The present disclosure also describes example methods to be implemented at a first wireless network for a wireless device handoff between a second wireless network and the first wireless network. The methods may include receiving a handoff request from the second wireless network, the handoff request based, at least in part, on a determination by the second wireless network that the wireless device is not currently covered by the first wireless network but is capable of being covered by the first wireless network. Based, at least in part, on the handoff request, one or more beams of an antenna array may be adapted to facilitate coverage of the wireless device by the first wireless network. The wireless device may then be handed off from the second wireless network to the first wireless network.

The present disclosure also describes example devices for a first wireless network to handoff a wireless device to a second wireless network. The example devices may have a coverage manager that has logic. The logic may be configured to receive coverage information associated with the wireless device and determine whether the wireless device is possibly capable of being covered by the second wireless network based, at least in part, on the coverage information. The logic may also be configured to transmit a handoff request to the second wireless network based, at least in part, on the determination that the wireless device is possibly capable of being covered by the second wireless network.

The present disclosure also describes example systems for a wireless device handoff between a first wireless network and a second wireless network. The example systems may include an antenna array configured to generate one or more adaptable beams to modify a coverage area for the first wireless network. The example systems may also include an adaption manager. The adaption manager may have logic configured to receive a handoff request from the second wireless network, the handoff request based, at least in part, on a determination by the second wireless network that the wireless device is capable of being covered by the first wireless network. The logic may also be configured to cause a beam from among the one or more adaptable beams to be adapted in order to enable the wireless device to be covered by the first wireless network. The logic may further be configured to transmit a confirmation to the second wireless network to indicate acceptance of the handoff request and the wireless device may then be handed off from the second wireless network to the first wireless network.

The present disclosure also describes example computer program products. In some examples, the computer program products may include a signal bearing medium having instructions for a first wireless network to handoff a wireless device to a second wireless network. The instructions, which, when executed by logic may cause the logic to receive coverage information associated with the wireless device. Responsive to the received indication, the instructions may also cause the logic to determine whether the wireless device is possibly covered by the second wireless network based, at least in part, on the coverage information. The instructions may then cause the logic to transmit a handoff request to the second wireless network based, at least in part, on a determination that the wireless device is possibly covered by the second wireless network.

The foregoing summary is illustrative only and is not intended to be in any way limiting. In addition to the illustrative aspects, embodiments, and features described above, further aspects, embodiments, and features will become apparent by reference to the drawings and the following detailed description.

BRIEF DESCRIPTION OF THE DRAWINGS

The foregoing and other features of this disclosure will become more fully apparent from the following description and appended claims, taken in conjunction with the accompanying drawings. Understanding that these drawings depict only several embodiments in accordance with the disclosure and are, therefore, not to be considered limiting of its scope, the disclosure will be described with additional specificity and detail through use of the accompanying drawings.

FIGS. **1**A-C illustrate an example wireless communication system that includes two wireless networks;

FIG. **2** illustrates a block diagram of an example architecture for a coverage manager;

FIG. **3** illustrates a block diagram of an example architecture for an adaption manager;

FIG. **4** illustrates a flow chart of example methods implemented at a wireless network to handoff a wireless device to another wireless network;

FIG. **5** illustrates a flow chart of example methods implemented at the other wireless network for the wireless device handoff between the other wireless network and the wireless network;

FIG. **6** illustrates a block diagram of an example computer program product; and

FIG. **7** illustrates an example computing device; all arranged in accordance with the present disclosure.

DETAILED DESCRIPTION

In the following detailed description, reference is made to the accompanying drawings, which form a part hereof. In the drawings, similar symbols typically identify similar components, unless context dictates otherwise. The illustrative examples or embodiments described in the detailed description, drawings, and claims are not meant to be limiting. Other examples or embodiments may be utilized, and other changes may be made, without departing from the spirit or scope of the subject matter presented here. It will be readily understood that aspects of this disclosure, as generally described herein, and illustrated in the Figures, can be arranged, substituted, combined, and designed in a wide variety of different configurations, all of which are explicitly contemplated and make part of this disclosure.

This disclosure is drawn, inter alia, to methods, apparatus, systems and computer program products related to a wireless device handoff between a first wireless network and a second wireless network.

As contemplated in the present disclosure, constantly changing sectors of coverage may result in a wireless device being able to detect a wireless network at a location at a given period of time. However, as the sectors of coverage change, the wireless device may no longer detect the wireless network at the same location at another given period of time. Thus, beamforming or beam shaping may cause handoff challenges for a wireless device to possibly be handed off to the wireless network.

In some examples, methods are implemented at a first wireless network to handoff a wireless device to a second wireless network. The methods may include receiving coverage information associated with the wireless device and determining whether the wireless device is capable of being covered by the second wireless network based, at least in part, on the received coverage information. A handoff request may then be transmitted to the second wireless network based, at least in part, on the determination that the wireless device is capable of being covered by the second wireless network. For some examples, a confirmation may then be received that indicates the handoff request has been accepted by the second wireless network. The wireless device may then be handed off to the second wireless network based, at least in part, on the received confirmation.

In some other examples, methods are implemented at a first wireless network for a wireless device handoff between a second wireless network and the first wireless network. The methods may include receiving a handoff request from the second wireless network, the handoff request based, at least in part, on a determination by the second wireless network that the wireless device is not currently covered by the first wireless device but is capable of being covered by the first wireless network. Based, at least in part, on the handoff request, one or more beams of an antenna array may be adapted to facilitate coverage of the wireless device by the first wireless network. The wireless device may then be handed off from the second wireless network to the first wireless network.

FIGS. **1**A-C illustrate an example wireless communication system **100** that includes wireless networks **110** and **120**. As shown in FIGS. **1**A-C, wireless network **110** includes a coverage manager **112** and an antenna array **114**. Also, wireless network **120** includes an adaption manager **122** and an antenna array **124**. In some examples, wireless network **110** may have a coverage area indicated in FIGS. **1**A-C as coverage area **115**. Also, for these examples, the antenna array **124** of wireless network **120** may be adaptable (e.g., via beamforming) to enable wireless network **120** to have variable coverage areas. These variable coverage areas are shown in FIGS. **1**A-C as coverage area **125-1** and coverage area **125-2**.

According to some examples, as shown in FIGS. **1**A-C, wireless device **130**A may communicatively couple to wireless network **110** via communication link **116**A. Also, wireless device **140**A may communicatively couple to wireless network **120** via communication link **126**A. In some examples, wireless device **140**A may also be communicatively coupled to network **110** via communication link **116**I. As described more below, since wireless device **140**A may be communicatively coupled to both wireless networks, a communication channel **160** may be established that includes communication links **116**I and **126**A. Either wireless network **110** or wireless network **120** may use wireless device **140**A as a relay to communicate with the other wireless network via communication channel **160**. Additionally and/or alternatively, wireless network **110** may be communicatively coupled to wireless network **120** via communication channel **170** as shown in FIGS. **1**A-C.

In some examples, wireless networks **110** and **120** may be wireless base-stations that operate and/or may be separately associated with heterogeneous wireless networks. Wireless networks **110** and **120** may be heterogeneous based on each wireless network possibly operated by different network service providers and/or in accordance with different types of wireless network technologies. For these examples, the different network service providers may be able to handoff wireless devices between the different wireless networks but may not share operating characteristics such as current and past coverage areas One type of wireless network technology may be described in an industry standard known as Institute of Electrical and Electronics Engineers (IEEE) 802.16-2009 and may be referred to as "WiMax". Another type of wireless network technology may be described in one or more industry standards associated with the 3rd Generation Partnership Project such as GSM, GPRS, EDGE, W-CDMA, HSPA, LTE or LTE-Advanced and may be referred to as "3GPP". Yet another type of wireless network technology may be described in one or one or more industry standards associated with the 3rd Generation Partnership Project 2 such as CDMA-2000, EV-DO, EV-DO Rev. A or EV-DO Rev. B and may be referred to as "3GPP2". WiMax, 3GPP or 3GPP3 types of wireless networks may also be referred to as wireless wide area networks (WLANs). Although this disclosure is not limited to only the above-mentioned standards and types of wireless networks.

As mentioned above, wireless networks **110** and **120** may be coupled via communication channels **160** and/or **170**. In some examples, communication channels **160** and **170** may operate in compliance with one or more industry standards. The one or more industry standards may be associated with 3GPP, 3GPP2, IEEE 802.11-2007, or IEEE 802.16-2009 or may be associated with other industry standards such as standards associated with IEEE 802.1. In some examples, communication channels **160** and **170** may include wireless and/or wired communication links to couple wireless networks **110** and **120** and these communication links may also be

configured to operate in compliance with standards associated with 3GPP, 3GPP2, IEEE 802.11-2007, IEEE 802.16-2009 or IEEE 802.1. Although this disclosure is not limited to only the above-mentioned standards. As an example, the communication channel **170** may be used in an LTE wireless communication system as a network X1 channel. The network X1 channel may be used for instances where heterogeneous wireless networks coordinate/manage base-station to base-station communications between wireless networks.

In some examples, coverage manager **112** may be co-located with a base-station associated with wireless network **110**. In other examples, although not shown in FIGS. **1**A-C, coverage manager **112** may be located with control elements (e.g., a wireless communication system head end) that may remotely manage and/or control wireless network **110**. For these other examples, coverage manager **112** may be located remote to antenna array **114**, which provides coverage area **115** for wireless network **110**. Similarly, adaption manager **122** may be co-located with a base-station associated with wireless network **120**. Also, in other examples, adaption manager **122** may be located with control elements that may remotely manage and/or control wireless network **120**. For these other examples, adaption manager **122** may be located remote to antenna array **124**, which provides coverage areas **125-1** and **125-2** for wireless network **120**.

In some examples, coverage area **125-1** may indicate a coverage area for network **120** for a past time period and coverage area **125-2** may indicate a coverage area for a current or present time period. Although this disclosure is not limited to a wireless network having two coverage areas over past and present time periods, but may include any number of coverage areas over any number of time periods. As mentioned previously, antenna array **124** of wireless network **120** may be adaptable (e.g., via beamforming) to enable wireless network **120** to have variable coverage areas. As a result of the variable coverage areas, wireless device **130**A, as shown in FIG. **1**A, is within past coverage area **125-1** but is outside of current coverage area **125-2**. Thus, although wireless device **130**A is not currently covered by wireless network **120**, past coverage area **125-1** indicates that network **120** may be capable of providing coverage.

FIG. **1**B depicts a view of wireless communication system **100** that shows numerous wireless devices communicatively coupled to wireless network **110**. As shown in FIG. **1**A, wireless devices **130**A-H and **140**A may couple to wireless network **110** via communication links **116**A-I. In some examples, as described more below, coverage manager **112** of wireless network **110** may include logic and/or features configured to receive coverage information from wireless devices **130**A-H and **140**A to generate a coverage map to indicate possible coverage areas for neighboring wireless networks such as wireless network **120**. The coverage information received from a given wireless device may include information such as a location for the given wireless device, whether a signal from one or more neighboring wireless networks can be detected (e.g., strong enough to communicatively couple with the one or more neighboring wireless networks) or an indication of signal strength from the one or more neighboring wireless networks.

In some examples, as shown in FIG. **1**B, wireless devices **130**A and **130**H are in coverage area **125-1**. As a result of being in coverage area **125-1**, coverage information from wireless devices **130**A and **130**H may indicate that network **120** did provide coverage to these wireless devices at a past time period and this information may be indicated on the coverage map generated as described above. Therefore, although coverage area **125-2** indicates no coverage for wireless devices **130**A and **130**H at present, coverage manager **112** may be configured to determine that wireless device **130**A and/or wireless device **130**H may be capable of being covered by wireless network **120** based at least on the coverage map.

According to some examples, it may be determined that wireless device **130** and/or wireless network **110** would benefit from the handoff of wireless device **130** to wireless network **120**. For example, wireless device **130** may obtain a stronger signal from wireless network **120** or wireless network **110** may be overburdened and may need to reduce the number of wireless devices coupled to its network. Also, wireless device **130** may be a mobile wireless device and coverage map information may indicate that wireless device **130** may be moving towards wireless network **120** and away from wireless network **110**.

Coverage manager **112** of wireless network **110**, as mentioned above, may have already determined that wireless device **130**A may be capable being covered by wireless network **120**. As a result of wireless network **120** being capable of covering wireless device **130**A, coverage manager **112** may include logic and/or features to transmit a handoff request to wireless network **120**. The handoff request, for example, may be transmitted via communication channel **160** or **170**. As described more below, adaption manager **122** of wireless network **120** may include logic and/or features configured to receive the handoff request and determine whether to adapt antenna array **124** to facilitate coverage of wireless device **130**A. If a determination was made to adapt antenna array **124**, adaption manager **122** may transmit a confirmation (e.g., via communication channel **160** or **170**) to indicate acceptance of the handoff request. The coverage area for wireless network **120** may now be similar to coverage area **125-1** and wireless device **130**A may then be handed off from wireless network **110** to wireless network **120**.

FIG. **1**C depicts a view of wireless communication system **100** that shows numerous wireless devices communicatively coupled to wireless network **120**. As shown in FIG. **1**C, wireless devices **140**A-I and **130**A may couple to wireless network **120** via communication links **126**A-J. In some examples, as described more below, adaption manager **122** of wireless network **120** may include logic and/or features configured to receive a handoff request from wireless network **110** (e.g., via communication channel **160** or **170**). As described above, the handoff request may be based on a determination by wireless network **110** that wireless device **130**A may not be currently covered by wireless network **120** but may be capable of being covered by wireless network **120**. Adaption manager **122** may also include logic and/or features to adapt one or more beams of antenna array **124** to adjust wireless network **120**'s coverage area (e.g., back to coverage area **125-1**) based at least on the handoff request. For example, the one or more beams of antenna array **124** may be configured to provide directional signal transmissions for wireless network **120** via the use of beamforming techniques to include, but not limited to, the use of conventional beamformers or adaptive beamformers.

In some examples, adaption manager **122** may adapt the one or more beams of antenna array **124** based on certain criteria. For example, adaption manager **122** may include logic and/or features configured to predetermine criteria such as what network load would be placed on wireless network **120** if wireless device **130**A was handed off from wireless network **110**. The network load, for example, may be based on an estimate of an average load for wireless devices in

general (e.g., based on historical network data) or may be based on information included in the handoff request received from wireless network **110**.

According to some examples, adaption manager **122** may also include logic and/or features to determine an effect of adapting one or more beams may have on wireless devices **140**A-I. For example, as shown in FIG. **1**C, wireless device **140**C may be within coverage area **125-2**. However, if the one or more beams of antenna array **124** are adapted to adjust the coverage area back to coverage area **125-1**, wireless device **140**C is outside of this coverage area. Since wireless device **140**C may no longer be covered, adaption manager **122** may determine not to adapt the one or more beams. Hence, a confirmation to indicate an acceptance will not be transmitted to wireless network **110**. Alternatively, if adaption manager **122** values the addition of wireless device **130**A higher than the subtraction of wireless device **140**C (e.g., wireless device **130**A may be a more profitable/preferred user), a confirmation may be transmitted to wireless network **110**. The coverage area for wireless network **120** may then be adjusted to be similar to coverage area **125-1** and wireless device **130**A may then be handed off from wireless network **110** to wireless network **120**.

In some examples, wireless devices **130**A-I or wireless devices **140**A-J may be mobile or stationary wireless devices, e.g., a computer, laptop, netbook, e-book, tablet-PC, small-form factor portable (or mobile) electronic device such as a cell phone, smart phone, a personal data assistant (PDA), a personal media player device, a wireless web-watch device, a personal headset device, an application specific device, or a hybrid device that may include any of the above functions.

FIG. **2** illustrates a block diagram of an example architecture for a coverage manager **112**. As described above for wireless communication system **100** in FIGS. **1**A-C, wireless network **110** may include a coverage manager **112**. In some examples, coverage manager **112** includes features and/or logic configured or arranged for a first wireless network (e.g., wireless network **110**) to handoff a wireless device to a second wireless network (e.g., wireless network **120**).

The example coverage manager **112** of FIG. **2**, includes coverage logic **210**, control logic **220**, memory **230**, input/output (I/O) interfaces **240** and optionally one or more applications **250**. As illustrated in FIG. **2**, coverage logic **210** is coupled to control logic **220**, memory **230** and I/O interfaces **240**. Also illustrated in FIG. **2**, the optional applications **250** are arranged in cooperation with control logic **220**. Coverage logic **210** may further include one or more of an interval feature **212**, a receive feature **214**, a determine feature **216**, a request feature **218** or a handoff feature **219**, or any reasonable combination thereof.

In some examples, the elements portrayed in FIG. **2**'s block diagram are configured to support or enable coverage manager **112** as described in this disclosure. A given coverage manager **112** may include some, all or more elements than those depicted in FIG. **2**. For example, coverage logic **210** and control logic **220** may separately or collectively represent a wide variety of logic device(s) to implement the features of coverage manager **112**. An example logic device may include one or more of a computer, a microprocessor, a microcontroller, a field programmable gate array (FPGA), an application specific integrated circuit (ASIC), a sequestered thread or a core of a multi-core/multi-threaded microprocessor or a combination thereof.

In some examples, as shown in FIG. **2**, coverage logic **210** includes one or more of an interval feature **212**, a receive feature **214**, a determine feature **216**, a request feature **218** or a handoff feature **219**. Coverage logic **210** may be configured to use one or more of these features to perform operations. As described in more detail below, example operations may include implementing a handoff of a wireless device between a first wireless network and a second wireless network.

In some examples, control logic **220** may be configured to control the overall operation of coverage manager **112**. As mentioned above, control logic **220** may represent any of a wide variety of logic device(s) configured to operate in conjunction with executable content or instructions to implement the control of coverage manager **112**. In some alternate examples, the features and functionality of control logic **220** may be implemented within coverage logic **210**.

According to some examples, memory **230** is arranged to store executable content or instructions. The executable content or instructions may be used by control logic **220** and/or coverage logic **210** to implement or activate features or elements of coverage manager **112**. As described more below, memory **230** may also be arranged to at least temporarily maintain coverage information (e.g., coverage maps). The coverage information may be associated with a plurality of wireless devices coupled to a wireless network (e.g., wireless network **110**).

Memory **230** may include a wide variety of memory media including, but not limited to, one or more of volatile memory, non-volatile memory, flash memory, programmable variables or states, random access memory (RAM), read-only memory (ROM), or other static or dynamic storage media.

In some examples, I/O interfaces **240** may provide an interface via an internal communication medium or link between a coverage manager **112** and elements resident on or co-located with coverage manager **112**. For example, I/O interfaces **240** may provide an interface to elements co-located with coverage manager **112** at a wireless base-station or if coverage manager **112** is located remote to the wireless base-station, elements co-located at the remote location, e.g., at a wireless communication system head end. I/O interfaces **240** may include interfaces that operate according to various communication protocols to communicate over the internal communication link (e.g., Inter-Integrated Circuit (I^2C), System Management Bus (SMBus) or Serial Peripheral Interface Bus (SPI), etc.).

I/O interfaces **240** may also provide an interface between coverage manager **112** and elements remote to coverage manager **112**. In some examples, as mentioned above for FIGS. **1**A-C, wireless network **110** may couple to wireless network **120** via communication channels **160** or **170**. The I/O interfaces **240**, for example, include an interface configured to operate according to various wireless and/or wired communication protocols to allow coverage manager(s) **112** to communicate over communication channels **160** or **170** (e.g., IEEE, 802.1, IEEE 802.11, IEEE 802.16, GSM, GPRS, EDGE, W-CDMA, HSPA, LTE, CDMA-2000, EV-DO, etc.). In other examples, I/O interfaces **240** may allow coverage manager **112** to communicate to elements such as antenna array **114** if coverage manager **112** is remotely located to antenna array **114**, e.g., at a wireless communication system head end.

In some examples, coverage manager **112** includes one or more applications **250** to provide instructions to control logic **220** and/or coverage logic **210**. Instructions, for example, may include instructions for coverage manager **112** to implement or use one or more of an interval feature **212**, a receive feature **214**, a determine feature **216**, a request feature **218** or a handoff feature **219**.

FIG. **3** illustrates a block diagram of an example architecture for an adaption manager **122**. As described above for wireless communication system **100** in FIGS. **1**A-C, wireless

network **120** may include an adaption manager **122**. In some examples, adaption manager **122** includes features and/or logic configured or arranged for a handoff of a wireless device between wireless networks (e.g., wireless networks **110** and **120**).

The example adaption manager **122** of FIG. **3** includes adapt logic **310**, control logic **320**, memory **330**, input/output (I/O) interfaces **340** and optionally one or more applications **350**. As illustrated in FIG. **3**, adapt logic **310** is coupled to control logic **320**, memory **330** and I/O interfaces **340**. Also illustrated in FIG. **3**, the optional applications **350** are arranged in cooperation with control logic **320**. Adapt logic **310** may further include one or more of a receive feature **312**, a cost feature **314**, a beam feature **316** or a handoff feature **318**, or any reasonable combination thereof.

In some examples, the elements portrayed in FIG. **3**'s block diagram are configured to support or enable adaption manager **122** as described in this disclosure. A given adaption manager **122** may include some, all or more elements than those depicted in FIG. **3**. For example, adapt logic **310** and control logic **320** may separately or collectively represent a wide variety of logic device(s) to implement the features of adaption manager **122**. An example logic device may include one or more of a computer, a microprocessor, a microcontroller, a field programmable gate array (FPGA), an application specific integrated circuit (ASIC), a sequestered thread or a core of a multi-core/multi-threaded microprocessor or a combination thereof.

In some examples, as shown in FIG. **3**, adapt logic **310** includes one or more of a receive feature **312**, a cost feature **314**, a beam feature **316** or a handoff feature **318**. Adapt logic **310** may be configured to use one or more of these features to perform operations. As described in more detail below, example operations may include implementing a handoff of a wireless device between a first wireless network and a second wireless network.

In some examples, control logic **320** may be configured to control the overall operation of adaption manager **122**. Similar to control logic **220** mentioned above, control logic **320** may represent any of a wide variety of logic device(s) configured to operate in conjunction with executable content or instructions to implement the control of adaption manager **122**. In some alternate examples, the features and functionality of control logic **320** may be implemented within adapt logic **310**.

According to some examples, memory **330** is arranged to store executable content or instructions. The executable content or instructions may be used by control logic **320** and/or adapt logic **310** to implement or activate features or elements of adaption manager **122**. Memory **330** may also be arranged to temporarily maintain information associated with determining whether to accept a handoff request (e.g., predetermined network loads).

Memory **330** may include a wide variety of memory media including, but not limited to, one or more of volatile memory, non-volatile memory, flash memory, programmable variables or states, RAM, ROM, or other static or dynamic storage media.

In some examples, similar to I/O interfaces **240** described above, I/O interfaces **340** may provide an interface via an internal communication medium or link between adaption manager **122** and elements resident on co-located with adaption manager **122**. Also similar to I/O interface **240**, I/O interfaces **340** may also provide an interface between adaption manager **122** and elements remote to adaption manager **122**. In some examples, as mentioned above for FIGS. **1**A-C, wireless network **120** may couple to wireless network **110** via communication channels **160** or **170** that may operate according to various wireless and/or wired communication protocols. In other examples, I/O interfaces **340** may allow adaption manager **122** to communicate to elements such as antenna array **124** if adaption manager **122** is remotely located to antenna array **114**, e.g., at a wireless communication system head end.

In some examples, adaption manager **122** includes one or more applications **350** to provide instructions to control logic **320** and/or adapt logic **310**. Instructions, for example, may include instructions for adaption manager **122** to implement or use one or more of a receive feature **312**, a cost feature **314**, a beam feature **316** or a handoff feature **318**.

FIG. **4** illustrates a flow chart of example methods implemented at a wireless network (e.g., wireless network **110**) to handoff a wireless device to another wireless network (e.g., wireless network **120**). In some examples, wireless communication system **100** as shown in FIGS. **1**A-C, is used to illustrate example methods related to the flow chart depicted in FIG. **4**. A coverage manager **112** as shown in FIG. **2** may also be used to illustrate the example methods. But the described methods are not limited to implementations on wireless communication system **100** as shown in FIGS. **1**A-C or to the coverage manager **112** shown in FIG. **2**. The example methods may be implemented on other wireless communication systems having one or more of the elements depicted in FIGS. **1**A-C or FIG. **2**.

Beginning at block **410** (Begin Coverage Interval), coverage manager **112** may include logic and/or features configured to start a coverage interval (e.g., via interval feature **212**). In some examples, the coverage interval may be a time interval that may indicate to coverage manager **112** at wireless network **110** to decide if wireless devices can/should be handed off to another wireless network. The time interval may be based on an amount of time that does not overburden the wireless communication system with excessive overhead yet provides timely information to dynamically adjust to changing network environments (e.g., mobile/moving wireless devices and/or changing network loads).

Continuing from block **410** to decision block **420** (Possible Wireless Device to Handoff?), coverage manager **112** may include logic and/or features configured to determine whether a wireless device may need to be handed over to another wireless network (e.g., via receive feature **214**). In some examples, a possible wireless device to handoff may be a wireless device (e.g., wireless device **130**A) that is mobile and moving in the direction that may soon take the wireless device out of wireless network **110**'s coverage area **115**. For this example, cover manager **112** may or may not determine that wireless device **130**A is a possible handoff candidate to be handed off to wireless network **120**. So for the above example, if wireless device **130**A is a possible wireless device to handoff, the processing may continue from decision block **420** to block **430**. Otherwise, processing moves to decision block **490**.

Continuing from decision block **420** to block **430** (Receive Coverage Information), coverage manager **112** may include logic and/or features configured to receive coverage information associated with the wireless device to possibly handoff to wireless network **120** (e.g., via receive feature **214**). In some examples, as mentioned above for FIGS. **1**A-C, the coverage information may include a coverage map generated based on information received from wireless devices **130**A-**130**H. Also the coverage information may include additional information associated with a physical location of wireless device **130**A and/or an indication that wireless device **130**A does not detect a signal from wireless network **120**.

Continuing from block **430** to decision block **440** (Coverage Possible?), coverage manager **112** may include logic and/or features configured to determine whether wireless device **130**A was in a coverage area (e.g., coverage area **125-1**) that was covered by wireless network **120** in the past (e.g., via determine feature **216**). In some examples, the coverage map may be used to determine the potential for coverage by wireless network **120**. If the coverage map indicates that wireless device **130**A may be covered by wireless network **120**, processing may continue from decision block **440** to decision block **450**. Otherwise, processing moves to decision block **490**.

Continuing from decision block **440** to decision block **450** (Transmit Handoff Request?), coverage manager **112** may include logic and/or features configured to determine whether to transmit a handoff request to wireless network **120** (e.g., via request feature **218**). In some examples, coverage manager **112** may assess various criteria to determine whether a handoff of wireless device is cost effective or beneficial to wireless device **130**A and/or wireless network **110**. The criteria may include an estimated cost to handoff wireless device **130**A to wireless network **120**. For example, wireless device **130**A may not be a contracted user with a service provider that operates wireless network **120** and a high fee (e.g., roaming charge) may make a handoff unacceptably costly. The criteria may also include estimated signal strength from wireless network **120** if the handoff request is accepted. The criteria may further include whether wireless device **130**A is mobile or stationary. For example, if wireless device **130**A is mobile and coverage information indicates wireless device **130**A is moving towards wireless network **120** it may be beneficial to request a handoff. If a handoff request is to be transmitted to wireless network **120**, processing may continue from decision block **450** to block **460**. Otherwise, processing moves to decision block **490**.

Continuing from decision block **450** to block **460** (Transmit Handoff Request), coverage manager **112** may include logic and/or features configured to transmit the handoff request (e.g., via request feature **218**) to wireless network **120**. In some examples, the handoff request may be transmitted via communication channel **160** that may include the use of wireless device **140**A as a relay. In other examples, the handoff request may be transmitted via communication channel **170**. Also, the handoff request may include location or other information to allow wireless network **120** to possibly determine how the one or more beams of antenna array **124** may be adapted to cover wireless device **130**A.

Continuing from block **460** to decision block **470** (Conf. Received?), coverage manager **112** may include logic and/or features configured to determine whether a confirmation has been received from wireless network **120** (e.g., via receive feature **218**). In some examples, the received confirmation indicates to coverage manager **112** that the handoff request has been accepted for the handoff of wireless device **130**A to wireless network **120**. The confirmation may also indicate that wireless network **120** has adapted its coverage area to now cover the location of wireless device **130**A. Coverage manager **112** may also include logic and/or features configured to start a confirmation interval (e.g., via interval feature **212**) that establishes a period of time to wait for a confirmation. If a confirmation is received from wireless network **120** before the confirmation interval expires, processing may continue from decision block **470** to block **480**. Otherwise, if the confirmation interval expires and no confirmation has been received, processing moves to decision block **490**.

Continuing from decision block **470** to block **480** (Handoff Wireless Device), coverage manager **112** may include logic and/or features configured to handoff wireless device **130**A to wireless network **120** (e.g., via handoff feature **219**). In some examples, coverage manager **112** may be configured to follow protocols/procedures as described in operating agreements between operators of wireless networks **110** and **120** to conduct the handoff. Also, various industry standards may be followed to conduct the handoff (e.g., IEEE 802.16, GSM, GPRS, EDGE, W-CDMA, HSPA, LTE, CDMA-2000, EV-DO, etc).

Moving from block **480** to decision block **490** (Coverage Interval Over?), coverage manager **112** may include logic and/or features configured to determine whether the coverage interval is over (e.g., via interval feature **212**). In some examples, as mentioned above, the coverage interval may be a time interval that may indicate to coverage manager **112** at wireless network **110** to decide if wireless devices can/should be handed off to another wireless network. If the coverage interval is over, the process moves to block **410** and a new interval begins or is started. Otherwise, if the coverage interval is not yet over, the process moves to decision block **420** and other wireless devices coupled to wireless network **110** may be considered for a handoff.

FIG. **5** illustrates a flow chart of example methods implemented at a wireless network (e.g., wireless network **120**) for a wireless device handoff between another wireless network (e.g., wireless network **110**) and the wireless network. In some examples, wireless communication system **100** as shown in FIGS. **1**A-C, is used to illustrate example methods related to the flow chart depicted in FIG. **5**. An adaption manager **122** as shown in FIG. **3** may also be used to illustrate the example methods. But the described methods are not limited to implementations on wireless communication system **100** as shown in FIGS. **1**A-C or to the adaption manager **122** shown in FIG. **3**. The example methods may be implemented on other wireless communication systems having one or more of the elements depicted in FIGS. **1**A-C or FIG. **3**.

Moving from the start to block **510** (Receive Handoff Request), adaption manager **122** of wireless network **120** may include logic and/or features configured to receive a handoff request from wireless network **110** (e.g., via receive feature **312**). In some examples, the handoff request may be based on a determination by wireless network **110** that wireless device **130**A is not currently covered by wireless network **120** (e.g., coverage area **125-2**) but is capable of being covered by wireless network **120** (e.g., coverage area **125-1**). As mentioned above, the handoff request may be received via either communication channel **160** or **170**.

Continuing from block **510** to decision block **520** (Adapt Coverage Area?), adaption manager **122** may include logic and/or features configured to determine whether to adapt the coverage area for wireless network **120** (e.g., via cost feature **314**). In some examples, adaption manager **122** may evaluate the costs associated with a handoff of wireless device **130**A to wireless network **120** and base a determination on the associated costs. Those costs may be based on criteria to include a predetermined network load placed on wireless network **120** if wireless device **130**A is handed off. The costs may also be based on an effect of adapting the coverage area on other wireless devices coupled to wireless network **120** (e.g., wireless device **140**A-I). If a determination is made by adaption manager **122** to adapt the coverage area, processing continues from decision block **520** to block **530**. Otherwise, processing comes to an end.

Continuing from decision block **520** to block **530** (Adapt One or More Beams), adaption manager **122** may include logic and/or features configured to adapt one or more beams generated from or by antenna array **124** to facilitate coverage

of wireless device **130**A by wireless network **120** (e.g., via beam feature **316**). In some examples, a combination of beams generated by antenna array **124** may be directional beams. For these examples, adaption manager **122** may cause at least one of the directional beams to be adapted in order to change the coverage area (e.g., similar to coverage area **125-1**) of wireless network **120** to enable wireless device **130**A to be covered by wireless network **120**.

Continuing from block **530** to block **540** (Transmit Confirmation), adaption manager **122** may include logic and/or features configured to transmit a confirmation to indicate acceptance of the handoff request from wireless network **110** for wireless device **130**A (e.g., via beam feature **316**). In some examples, the confirmation may be transmitted via communication channel **160** or **170** and may indicate acceptance of the handoff request. The confirmation may also indicate that wireless network **120**'s coverage area has been adapted to now cover wireless device **130**A.

Continuing from block **540** to block **550** (Handoff Wireless Device), adaption manager **122** may include logic and/or features configured to handoff wireless device **130**A from wireless network **110** (e.g., via handoff feature **318**). In some examples, adaption manager **122** may be configured to follow protocols/procedures as described in operating agreements between operators of wireless networks **110** and **120** to conduct the handoff. Also, various industry standards may be followed to conduct the handoff. The process then moves from block **550** and comes to an end.

FIG. **6** illustrates a block diagram of an example computer program product **600**. In some examples, as shown in FIG. **6**, computer program product **600** includes a signal bearing medium **602** that may also include instructions **604** for a first wireless network (e.g., wireless network **110**) to handoff a wireless device (e.g., wireless device **130**A) to a second wireless network (e.g., wireless network **120**). Instructions **604**, which, when executed by logic (e.g., coverage logic **210**), may cause the logic to receive coverage information associated with the wireless device. The instructions **604** may also cause the logic to determine whether the wireless device is possibly covered by the second wireless network based, at least in part, on the coverage information. The instructions **604** may also cause the logic to transmit a handoff request to the second wireless network based, at least in part, on a determination that the wireless device is possibly covered by the second wireless network.

Also depicted in FIG. **6**, in some examples, computer product **600** may include one or more of a computer readable medium **606**, a recordable medium **608** and a communications medium **610**. The dotted boxes around these elements depict different types of mediums included within, but not limited to, signal bearing medium **602**. These types of mediums may distribute instructions **604** to be executed by logic (e.g., coverage logic **210**). Computer readable medium **606** and recordable medium **608** may include, but are not limited to, a flexible disk, a hard disk drive (HDD), a Compact Disc (CD), a Digital Versatile Disk (DVD), a digital tape, a computer memory, etc. Communications medium **610** may include, but is not limited to, a digital and/or an analog communication medium (e.g., a fiber optic cable, a waveguide, a wired communication link, a wireless communication link, etc.).

FIG. **7** illustrates an example computing device **700**. In some examples, coverage manager **112** or adaption manager **122** depicted in FIGS. **1**A-C, FIG. **2** or FIG. **3** may be implemented on computing device **700**. In these examples, elements of computing device **700** may be arranged or configured for a wireless device handoff between a first wireless network and a second wireless network. In a very basic configuration **701**, computing device **700** typically includes one or more processors **710** and system memory **720**. A memory bus **730** can be used for communicating between the processor **710** and the system memory **720**.

Depending on the desired configuration, processor **710** can be of any type including but not limited to a microprocessor (μP), a microcontroller (μC), a digital signal processor (DSP), or any combination thereof. Processor **710** can include one or more levels of caching, such as a level one cache **711** and a level two cache **712**, a processor core **713**, and registers **714**. The processor core **713** can include an arithmetic logic unit (ALU), a floating point unit (FPU), a digital signal processing core (DSP Core), or any combination thereof. A memory controller **715** can also be used with the processor **710**, or in some implementations the memory controller **715** can be an internal part of the processor **710**.

Depending on the desired configuration, the system memory **720** can be of any type including but not limited to volatile memory (such as RAM), non-volatile memory (such as ROM, flash memory, etc.) or any combination thereof. System memory **720** typically includes an operating system **721**, one or more applications **722**, and program data **724**. Application **722** includes instructions **723** that are arranged to perform the functions as described herein including the actions described with respect to coverage manager **112** architecture shown in FIG. **2**, adaption manager **122** architecture shown in FIG. **3** or including the actions described with respect to the flow charts shown in FIGS. **4** and **5**. Program Data **724** includes handoff data **725** that is useful for implementing instructions **723** (e.g., determining whether to handoff, coordinating or executing handoffs between wireless networks). In some examples, application **722** can be arranged to operate with program data **724** on an operating system **721** such that implementations for a wireless device handoff between a first wireless network and a second wireless network may be provided as described herein. This described basic configuration is illustrated in FIG. **7** by those components within dashed line **701**.

Computing device **700** can have additional features or functionality, and additional interfaces to facilitate communications between the basic configuration **701** and any required devices and interfaces. For example, a bus/interface controller **740** can be used to facilitate communications between the basic configuration **701** and one or more data storage devices **750** via a storage interface bus **741**. The data storage devices **750** can be removable storage devices **751**, non-removable storage devices **752**, or a combination thereof. Examples of removable storage and non-removable storage devices include magnetic disk devices such as flexible disk drives and hard-disk drives (HDD), optical disk drives such as compact disk (CD) drives or digital versatile disk (DVD) drives, solid state drives (SSD), and tape drives to name a few. Example computer storage media can include volatile and nonvolatile, removable and non-removable media implemented in any method or technology for storage of information, such as computer readable instructions, data structures, program modules, or other data.

System memory **720**, removable storage **751** and non-removable storage **752** are all examples of computer storage media. Computer storage media includes, but is not limited to, RAM, ROM, EEPROM, flash memory or other memory technology, CD-ROM, digital versatile disks (DVD) or other optical storage, magnetic cassettes, magnetic tape, magnetic disk storage or other magnetic storage devices, or any other medium which can be used to store the desired information

and which can be accessed by computing device **700** (e.g., coverage maps). Any such computer storage media can be part of device **700**.

Computing device **700** can also include an interface bus **742** for facilitating communication from various interface devices (e.g., output interfaces, peripheral interfaces, and communication interfaces) to the basic configuration **701** via the bus/interface controller **740**. Example output interfaces **760** include a graphics processing unit **761** and an audio processing unit **762**, which can be configured to communicate to various external devices such as a display or speakers via one or more A/V ports **763**. Example peripheral interfaces **770** include a serial interface controller **771** or a parallel interface controller **772**, which can be configured to communicate with external devices such as input devices (e.g., keyboard, mouse, pen, voice input device, touch input device, etc.) or other peripheral devices (e.g., printer, scanner, etc.) via one or more I/O ports **773**. An example communication interface **780** includes a network controller **781**, which can be arranged to facilitate communications with one or more other computing devices **790** over a network communication via one or more communication ports **782**. A network communication connection is one example of a communication media. Communication media may typically be embodied by computer readable instructions, data structures, program modules, or other data in a modulated data signal, such as a carrier wave or other transport mechanism, and includes any information delivery media. A "modulated data signal" can be a signal that has one or more of its characteristics set or changed in such a manner as to encode information in the signal. By way of example, and not limitation, communication media can include wired media such as a wired network or direct-wired connection, and wireless media such as acoustic, radio frequency (RF), infrared (IR) and other wireless media. The term computer readable media as used herein can include both storage media and communication media.

Computing device **700** can be implemented as a portion of a personal computer including both laptop computer and non-laptop computer configurations or implemented in a workstation or a server configuration. In some examples, computing device **700** may be included in or associated with a base-station for a wireless network (e.g., wireless networks **110** or **120**). In other examples, computing device **700** may be part of a wireless communication system head end that may control/manage a wireless network.

References made in this disclosure to the term "responsive to" or "in response to" are not limited to responsiveness to a particular feature and/or structure. A feature may also be responsive to another feature and/or structure and also be located within that feature and/or structure. Moreover, when terms or phrases such as "coupled" or "responsive" or "in response to" or "in communication with", etc. are used herein or in the claims that follow, these terms should be interpreted broadly. For example, the phrase "coupled to" may refer to being communicatively, electrically and/or operatively coupled as appropriate for the context in which the phrase is used.

Those skilled in the art will recognize that it is common within the art to describe devices and/or processes in the fashion set forth herein, and thereafter use engineering practices to integrate such described devices (e.g., transmitters, receivers, wireless devices, computing platforms, computing devices, etc.) and/or methods into data processing systems. That is, at least a portion of the devices and/or methods described herein can be integrated into a data processing system via a reasonable amount of experimentation. Those having skill in the art will recognize that a typical data processing system generally includes one or more of a system unit housing, a video display device, a memory such as volatile and non-volatile memory, processors such as microprocessors and digital signal processors, computational entities such as operating systems, drivers, graphical user interfaces, and applications programs, one or more interaction devices, such as a touch pad or screen, and/or control systems including feedback loops and control motors (e.g., feedback for sensing position and/or velocity; control motors for moving and/or adjusting components and/or quantities). A typical data processing system may be implemented utilizing any suitable commercially available component, such as those typically found in data computing/communication and/or network computing/communication systems.

The herein described subject matter sometimes illustrates different components or elements contained within, or connected with, different other components or elements. It is to be understood that such depicted architectures are merely examples, and that in fact many other architectures can be implemented which achieve the same functionality. In a conceptual sense, any arrangement of components to achieve the same functionality is effectively "associated" such that the desired functionality is achieved. Hence, any two components herein combined to achieve a particular functionality can be seen as "associated with" each other such that the desired functionality is achieved, irrespective of architectures or intermedial components. Likewise, any two components so associated can also be viewed as being "operably connected", or "operably coupled", to each other to achieve the desired functionality, and any two components capable of being so associated can also be viewed as being "operably couplable", to each other to achieve the desired functionality. Specific examples of operably couplable include but are not limited to physically mateable and/or physically interacting components and/or wirelessly interactable and/or wirelessly interacting components and/or logically interacting and/or logically interactable components.

With respect to the use of substantially any plural and/or singular terms herein, those having skill in the art can translate from the plural to the singular and/or from the singular to the plural as is appropriate to the context and/or application. The various singular/plural permutations may be expressly set forth herein for sake of clarity.

It will be understood by those within the art that, in general, terms used herein, and especially in the appended claims (e.g., bodies of the appended claims) are generally intended as "open" terms (e.g., the term "including" should be interpreted as "including but not limited to," the term "having" should be interpreted as "having at least," the term "includes" should be interpreted as "includes but is not limited to," etc.). It will be further understood by those within the art that if a specific number of an introduced claim recitation is intended, such an intent will be explicitly recited in the claim, and in the absence of such recitation no such intent is present. For example, as an aid to understanding, the following appended claims may contain usage of the introductory phrases "at least one" and "one or more" to introduce claim recitations. However, the use of such phrases should not be construed to imply that the introduction of a claim recitation by the indefinite articles "a" or "an" limits any particular claim containing such introduced claim recitation to inventions containing only one such recitation, even when the same claim includes the introductory phrases "one or more" or "at least one" and indefinite articles such as "a" or "an" (e.g., "a" and/or "an" should typically be interpreted to mean "at least one" or "one or more"); the same holds true for the use of definite articles used to introduce claim recitations. In addition, even if a

specific number of an introduced claim recitation is explicitly recited, those skilled in the art will recognize that such recitation should typically be interpreted to mean at least the recited number (e.g., the bare recitation of "two recitations," without other modifiers, typically means at least two recitations, or two or more recitations). Furthermore, in those instances where a convention analogous to "at least one of A, B, and C, etc." is used, in general such a construction is intended in the sense one having skill in the art would understand the convention (e.g., "a system having at least one of A, B, and C" would include but not be limited to systems that have A alone, B alone, C alone, A and B together, A and C together, B and C together, and/or A, B, and C together, etc.). In those instances where a convention analogous to "at least one of A, B, or C, etc." is used, in general such a construction is intended in the sense one having skill in the art would understand the convention (e.g., "a system having at least one of A, B, or C" would include but not be limited to systems that have A alone, B alone, C alone, A and B together, A and C together, B and C together, and/or A, B, and C together, etc.). It will be further understood by those within the art that virtually any disjunctive word and/or phrase presenting two or more alternative terms, whether in the description, claims, or drawings, should be understood to contemplate the possibilities of including one of the terms, either of the terms, or both terms. For example, the phrase "A or B" will be understood to include the possibilities of "A" or "B" or "A and B."

While various aspects and embodiments have been disclosed herein, other aspects and embodiments will be apparent to those skilled in the art. The various aspects and embodiments disclosed herein are for purposes of illustration and are not intended to be limiting, with the true scope and spirit being indicated by the following claims.

What is claimed is:

1. A method implemented at a first wireless network to handoff a mobile wireless device to a second wireless network, the method comprising:

receiving coverage information associated with the wireless device;

determining whether the wireless device is capable of being covered by the second wireless network based, at least in part, on the received coverage information, wherein the determining includes determining that the wireless device is not currently covered by the second wireless network but is capable of being covered by the second wireless network; and

transmitting a handoff request to the second wireless network based, at least in part, on the determination that the wireless device is capable of being covered by the second wireless network,

wherein the coverage information includes mapping information of one or more locations of the wireless device for which the second wireless network has previously had coverage.

2. A method according to claim **1**, further comprising:

receiving a confirmation from the second wireless network that the handoff request has been accepted by the second wireless network, wherein based, at least in part, on the received confirmation, the wireless device is handed off to the second wireless network.

3. A method according to claim **1**, wherein the coverage information includes location information of the wireless device and an indication that the wireless device does not detect a signal from the second wireless network.

4. A method according to claim **1**, wherein the mapping information of one or more locations for which the second wireless network has previously had coverage comprises a map generated based, at least in part, on information received from one or more wireless devices communicatively coupled to the first wireless network and covered by the second wireless network, wherein covered by the second wireless network includes a detectable signal from the second wireless network to the one or more wireless devices.

5. A method according to claim **1**, wherein the transmitting the handoff request comprises transmitting the handoff request based, at least in part, on at least one of an estimated cost to handoff the wireless device to the second wireless network, or an estimated signal strength from the second wireless network at the location of the wireless device if the handoff request is accepted.

6. A method according to claim **1**, wherein the transmitting the handoff request comprises transmitting the handoff request via a wireless or a wired communication link that communicatively couples the first wireless network to the second wireless network.

7. A method according to claim **1**, wherein the transmitting the handoff request comprises transmitting the handoff request via another mobile wireless device that is configured to be communicatively coupled to both the first wireless network and the second wireless network, wherein the another mobile wireless device serves as a relay between the first wireless network and the second wireless network.

8. A method according to claim **1**, wherein the first wireless network is a different type of wireless network than the second wireless network.

9. A method implemented at a first wireless network for a mobile wireless device handoff between a second wireless network and the first wireless network, the method comprising:

receiving a handoff request from the second wireless network, the handoff request based, at least in part, on a determination by the second wireless network that the wireless device is not currently covered by the first wireless network but is capable of being covered by the first wireless network;

based, at least in part, on the handoff request, adapting one or more beams of an antenna array to facilitate coverage of the wireless device by the first wireless network; and

transmitting a confirmation from the first wireless network to the second wireless network to indicate acceptance of the handoff request, wherein the wireless device is handed off from the second wireless network to the first wireless network.

10. A method according to claim **9**, wherein the receiving the handoff request comprises receiving the handoff request via a wireless or a wired communication link that communicatively couples the first wireless network to the second wireless network.

11. A method according to claim **9**, wherein the receiving the handoff request comprises receiving the handoff request via another mobile wireless device that is configured to be communicatively coupled to both the first wireless network and the second wireless network, wherein the another mobile wireless device serves as a relay between the first wireless network and the second wireless network.

12. A method according to claim **9**, wherein the adapting one or more beams comprises adapting one or more beams based, at least in part, on one of a predetermined network load placed on the first wireless network due to the handoff of the wireless device or an effect of adapting one or more beams on other wireless devices currently communicatively coupled to the first wireless network.

13. An apparatus for a first wireless network to handoff a wireless device to a second wireless network, the apparatus comprising:

a coverage manager having logic, the logic configured to:

receive coverage information associated with the wireless device;

determine whether the wireless device is capable of being covered by the second wireless network based, at least in part, on the coverage information, wherein the logic is further configured to determine that the wireless device is not currently covered by the second wireless network but is capable of being covered by the second wireless network; and

transmit a handoff request to the second wireless network based, at least in part, on the determination that the wireless device is capable of being covered by the second wireless network,

wherein the coverage information includes mapping information of one or more locations of the wireless device for which the second wireless network has previously had coverage.

14. An apparatus according to claim 13, wherein the logic is further configured to:

receive a confirmation that the handoff request has been accepted by the second wireless network, wherein the wireless device is handed off to the second wireless network.

15. An apparatus according to claim 13, wherein the coverage information includes location information of the wireless device and an indication that the wireless device does not detect a signal from the second wireless network.

16. An apparatus according to claim 13, wherein the logic is further configured to generate the mapping information based, at least in part, on information received from wireless devices communicatively coupled to the first wireless network and covered by the second wireless network, wherein covered by the second wireless network includes a detectable signal from the second wireless network to the wireless devices.

17. An apparatus according to claim 13, wherein the logic is further configured to transmit a handoff request based, at least in part, on at least one of an estimated cost to handoff the wireless device to the second wireless network, an estimated signal strength from the second wireless network at the location of the wireless device if the handoff request is accepted, or whether the wireless device is a mobile wireless device.

18. An apparatus according to claim 13, wherein the logic is further configured to transmit a handoff request via a wireless or a wired communication link that communicatively couples the first wireless network to the second wireless network.

19. An apparatus according to claim 13, wherein the logic is further configured to transmit a handoff request via another wireless device that is configured to be communicatively coupled to both the first wireless network and the second wireless network, wherein the another wireless device serves as a relay between the first wireless network and the second wireless network.

20. A system for a wireless device handoff between a first wireless network and a second wireless network, the system comprising:

an antenna array configured to generate one or more adaptable beams to modify a coverage area for the first wireless network; and

an adaption manager having logic, the logic configured to:

receive a handoff request from the second wireless network, the handoff request based, at least in part, on a determination by the second wireless network that the wireless device is capable of being covered by the first wireless network,

cause a beam from among the one or more adaptable beams to be adapted in order to enable the wireless device to be covered by the first wireless network, and

transmit a confirmation to the second wireless network to indicate acceptance of the handoff request, wherein the wireless device is handed off from the second wireless network to the first wireless network.

21. A system according to claim 20, wherein to receive the handoff request comprises to receive the handoff request via a wireless or a wired communication link that communicatively couples the first wireless network to the second wireless network.

22. A system according to claim 20, wherein to receive the handoff request comprises to receive the handoff request via another wireless device that is configured to be communicatively coupled to both the first wireless network and the second wireless network, wherein the another wireless device serves as a relay between the first wireless network and the second wireless network.

23. A system according to claim 20, wherein to cause the beam to be adapted comprises to cause a beam to be adapted based, at least in part, on one of a network load placed on the first wireless network due to the handoff of the wireless device or an impact of adapting one or more beams on other wireless devices currently communicatively coupled to the first wireless network.

24. A computer program product comprising a non-transitory medium having instructions for a first wireless network to handoff a wireless device to a second wireless network, which, when executed by logic, cause the logic to:

receive coverage information associated with the wireless device;

determine whether the wireless device is capable of being covered by the second wireless network based, at least in part, on the coverage information, wherein to determine comprises to determine that the wireless device is not currently covered by the second wireless network but is capable of being covered by the second wireless network; and

transmit a handoff request to the second wireless network based, at least in part, on a determination that the wireless device is capable of being covered by the second wireless network,

wherein the coverage information includes mapping information of one or more locations of the wireless device for which the second wireless network has previously had coverage.

25. A computer program product according to claim 24, further comprising instructions to cause the logic to receive a confirmation that the handoff request has been accepted by the second wireless network, wherein the wireless device is handed off to the second wireless network.

26. A computer program product according to claim 24, wherein the coverage information includes location information of the wireless device and an indication that the wireless device does not detect a signal from the second wireless network.

27. A computer program product according to claim 24, wherein the mapping information of one or more locations for which the second wireless network has had coverage in the past comprises a map generated based on information received from one or more wireless devices communicatively coupled to the first wireless network and covered by the second wireless network, wherein covered by the second

wireless network detection of a detectable signal from the second wireless network to the one or more wireless devices.

28. A computer program product according to claim **24**, further comprising instructions to cause the logic to transmit a handoff request via a wireless or a wired communication link that communicatively couples the first wireless network to the second wireless network.

29. A computer program product according to claim **24**, further comprising instructions to cause the logic to transmit a handoff request via another wireless device that is configured to be communicatively coupled to both the first wireless network and the second wireless network, wherein the another wireless device serves as a relay between the first wireless network and the second wireless network.

* * * * *