US006819345B1

(12) **United States Patent**
Jones et al.

(10) **Patent No.: US 6,819,345 B1**
(45) **Date of Patent: *Nov. 16, 2004**

(54) **MANAGING POSITION AND SIZE FOR A DESKTOP COMPONENT**

(75) Inventors: **Christopher R. Jones**, Seattle, WA (US); **Christopher R. Brown**, Seattle, WA (US); **Michael A. Schmidt**, Issaquah, WA (US); **Sankar Ramasubramanian**, Redmond, WA (US); **Sean L. Flynn**, North Bend, WA (US); **Edward Jason Anderson**, Duvall, WA (US); **Mark H. Enomoto**, Seattle, WA (US); **Gayna Williams**, Seattle, WA (US); **Bryan T. Starbuck**, Redmond, WA (US)

(73) Assignee: **Microsoft Corporation**, Redmond, WA (US)

(*) Notice: This patent issued on a continued prosecution application filed under 37 CFR 1.53(d), and is subject to the twenty year patent term provisions of 35 U.S.C. 154(a)(2).

Subject to any disclaimer, the term of this patent is extended or adjusted under 35 U.S.C. 154(b) by 0 days.

(21) Appl. No.: **09/024,311**

(22) Filed: **Feb. 17, 1998**

(51) **Int. Cl.**[7] **G06F 13/00**

(52) **U.S. Cl.** **345/856**; 345/854; 345/853; 345/764

(58) **Field of Search** 345/340, 352, 345/146, 339, 357, 334, 342, 333, 145

(56) **References Cited**

U.S. PATENT DOCUMENTS

4,931,783 A * 6/1990 Atkinson 345/163
5,515,496 A * 5/1996 Kaehler et al. 345/159
5,581,686 A * 12/1996 Koppolu et al. 345/340
5,745,100 A * 4/1998 Bates et al. 345/157
5,760,771 A * 6/1998 Blonder et al. 345/336
5,786,818 A * 7/1998 Brewer et al. 345/339
5,808,601 A * 9/1998 Leah et al. 345/145
5,914,718 A * 6/1999 Chiu et al. 345/358
6,078,308 A * 6/2000 Rosenberg et al. 345/145
6,091,415 A * 7/2000 Chang et al. 345/347

OTHER PUBLICATIONS

IBM, "System Application Architecture—Common User Access Advanced Interface Design Guide" pp. 29–30, Jun. 1989.*

* cited by examiner

Primary Examiner—Raymond J. Bayerl
Assistant Examiner—Tadesse Hailu
(74) *Attorney, Agent, or Firm*—Christensen O'Connor Johnson Kindness PLLC

(57) **ABSTRACT**

In a graphical desktop environment displaying desktop components, a control is provided to track the position of a pointer on a screen, and when the pointer enters relevant regions with respect to a desktop component, a thin or thick border in displayed around the desktop component to enable a user to resize the desktop component, and/or a caption bar is displayed along an edge of the component to enable a user to move the desktop component on the desktop. The caption bar may additionally be provided with menu and close buttons, to enable the user to bring up a menu of properties and/or actions for the desktop component, and close the desktop component, respectively. When the pointer is outside any region relevant to a desktop component, no borders or caption bars are displayed, thereby resulting in a visually less cluttered appearance.

9 Claims, 8 Drawing Sheets

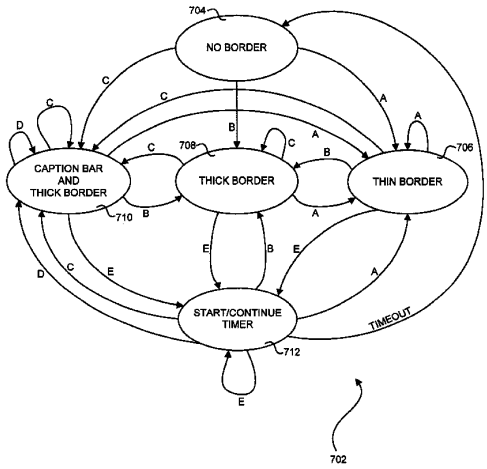

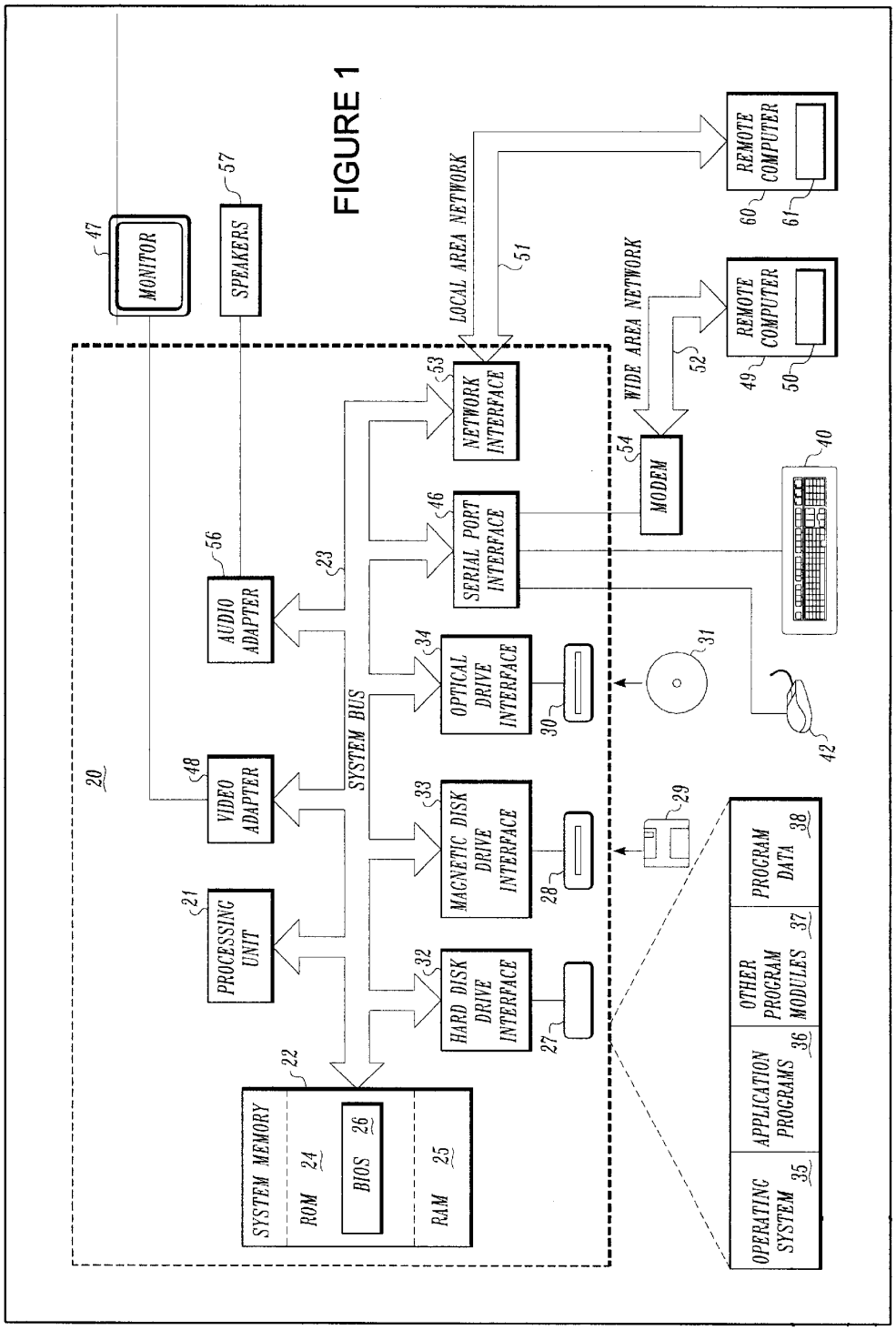
20
MONITOR
47
SPEAKERS
57
AUDIO ADAPTER
56
VIDEO ADAPTER
48
PROCESSING UNIT
21
SYSTEM MEMORY
22
ROM 24
BIOS 26
RAM 25
SYSTEM BUS
23
HARD DISK DRIVE INTERFACE
32
MAGNETIC DISK DRIVE INTERFACE
33
OPTICAL DRIVE INTERFACE
34
SERIAL PORT INTERFACE
46
NETWORK INTERFACE
53
LOCAL AREA NETWORK
51
WIDE AREA NETWORK
52
MODEM
54
REMOTE COMPUTER
49
50
REMOTE COMPUTER
60
61
27
28
29
30
31
40
42
OPERATING SYSTEM 35
APPLICATION PROGRAMS 36
OTHER PROGRAM MODULES 37
PROGRAM DATA 38

FIGURE 1

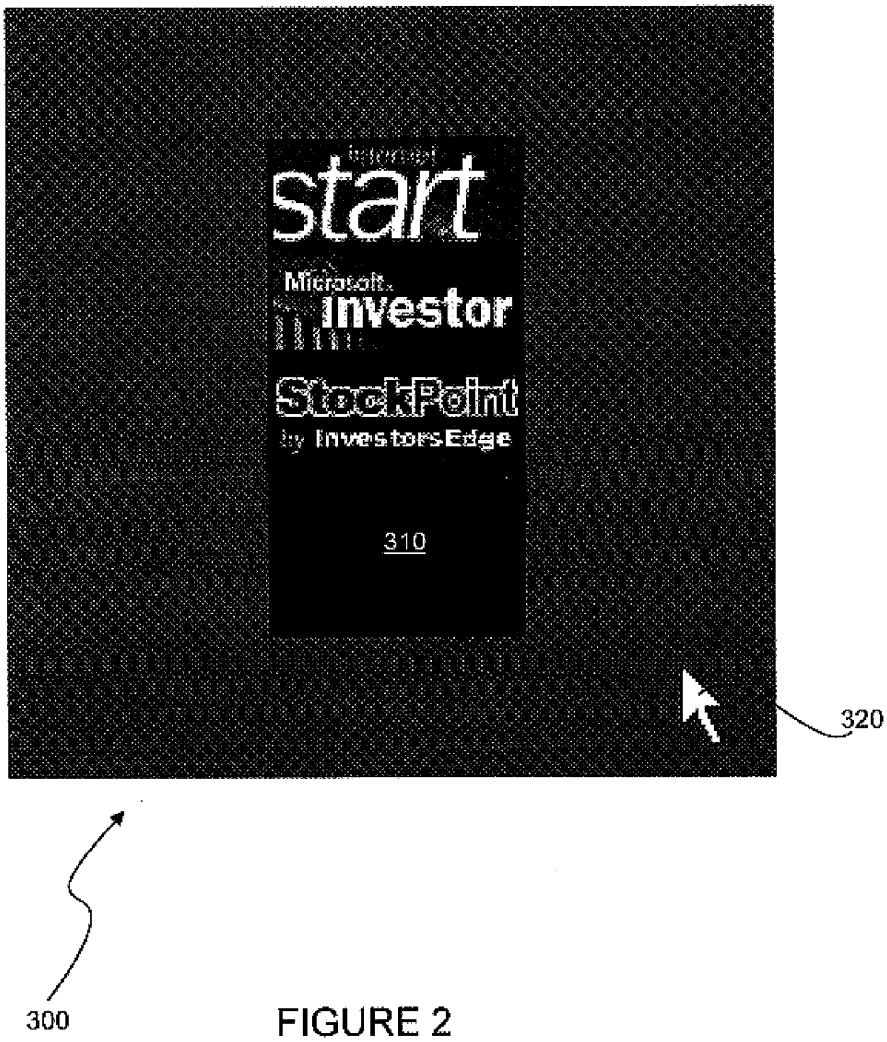
start
Microsoft
investor
StockPoint
by InvestorsEdge
310
320
300

FIGURE 2

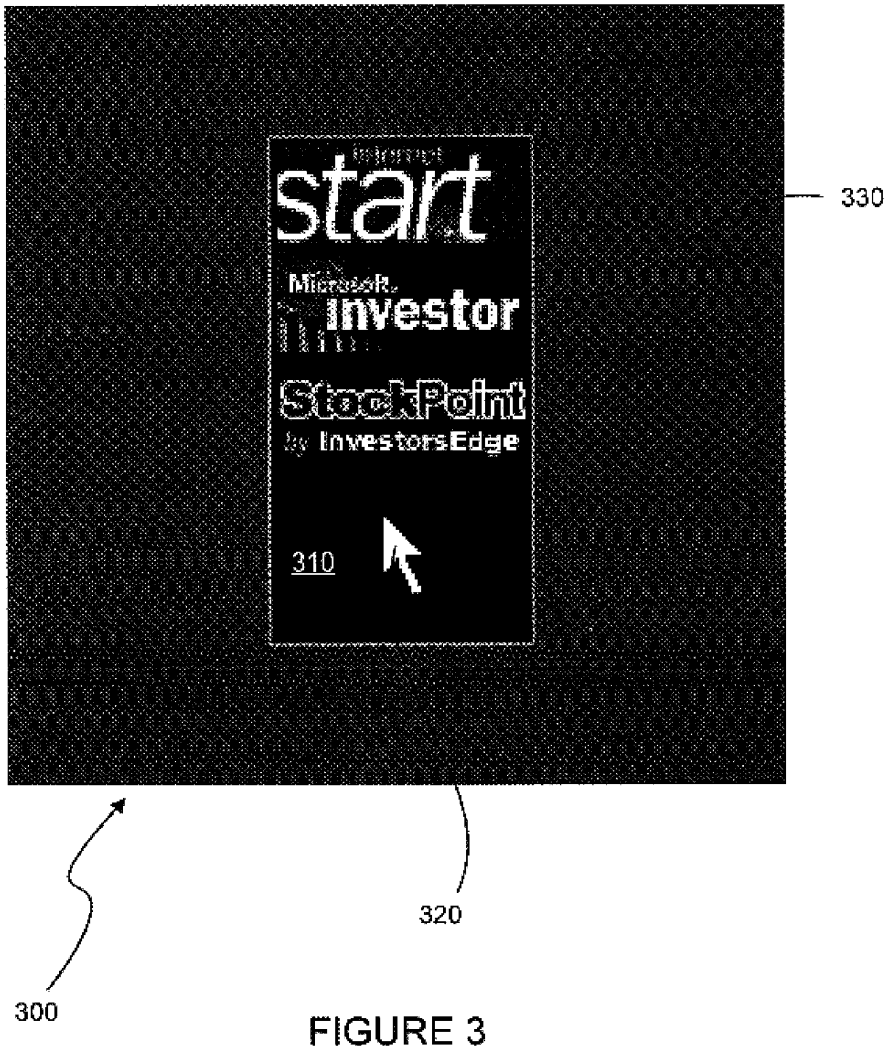
start
Microsoft
investor
StockPoint
by InvestorsEdge
310
330
320
300

FIGURE 3

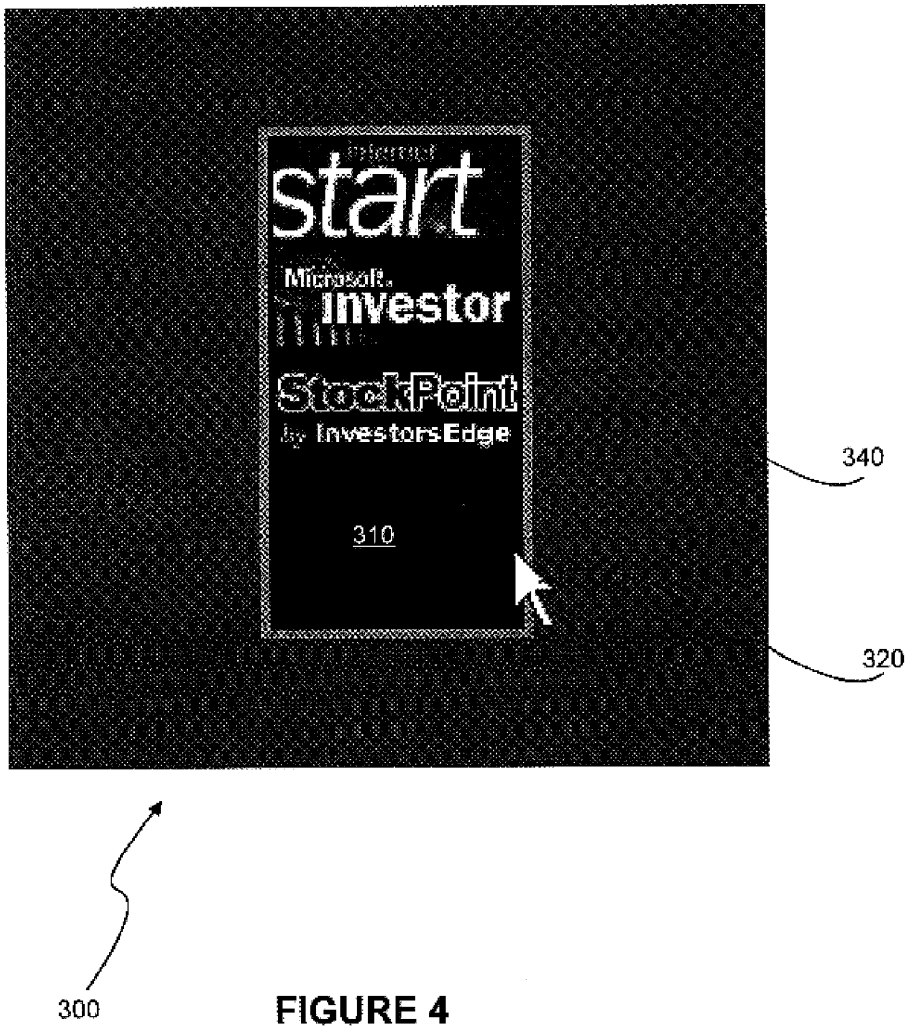
start
Microsoft
investor
StockPoint
by InvestorsEdge
310
340
320
300

FIGURE 4

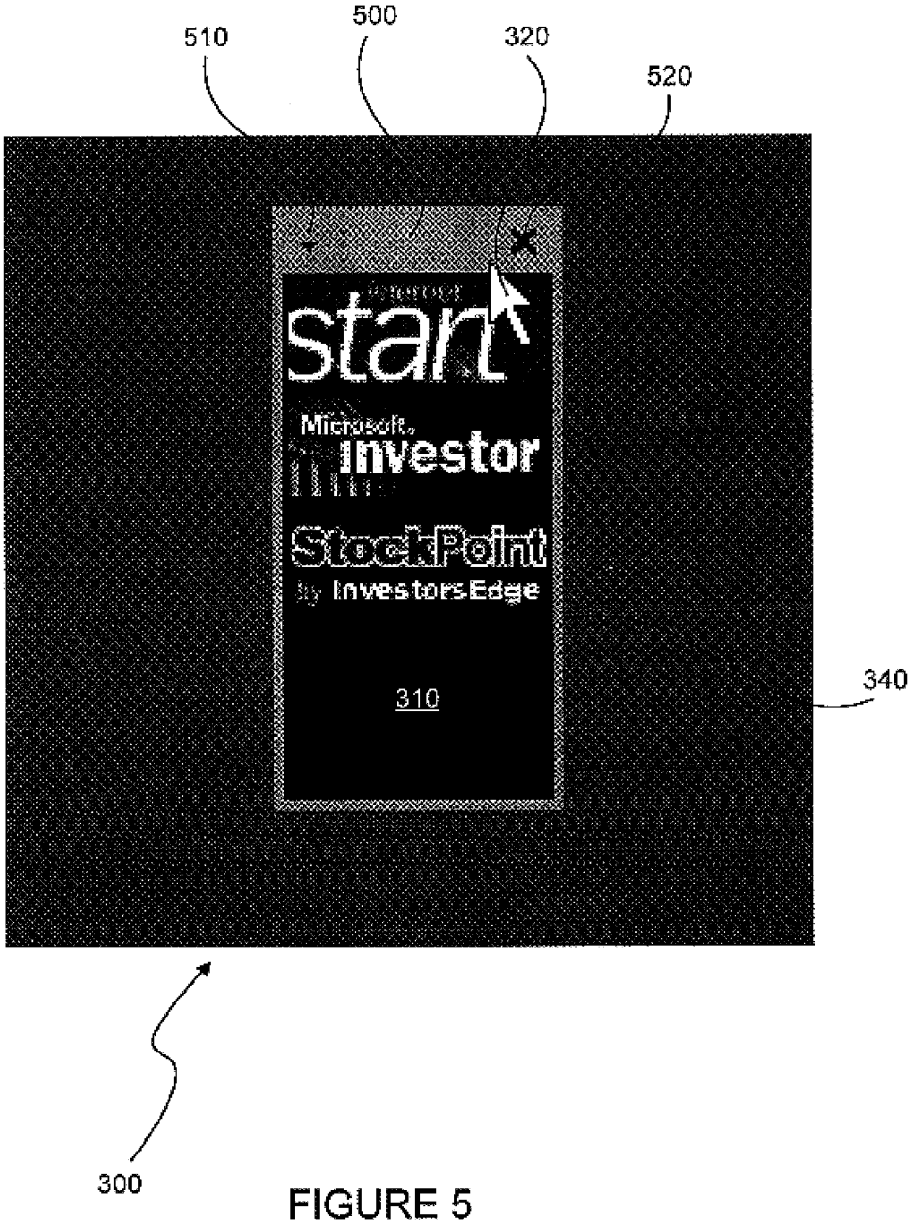
510
500
320
520
start
Microsoft
investor
StockPoint
by InvestorsEdge
310
340
300

FIGURE 5

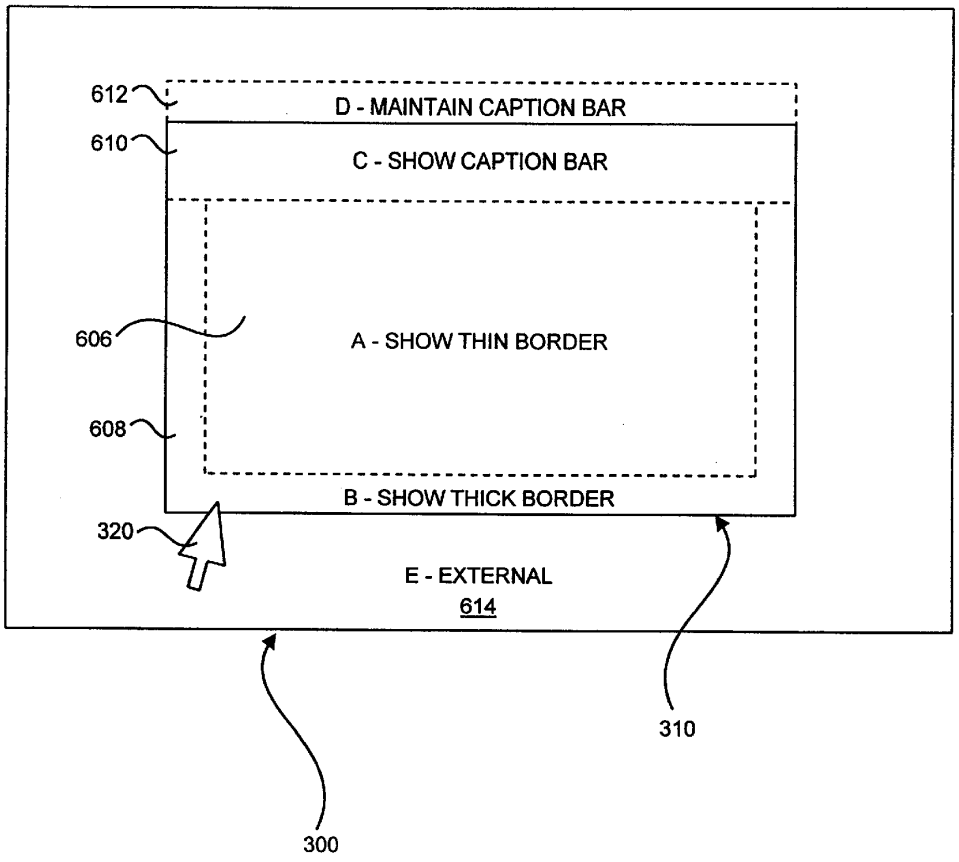
612
D - MAINTAIN CAPTION BAR
610
C - SHOW CAPTION BAR
606
A - SHOW THIN BORDER
608
B - SHOW THICK BORDER
320
E - EXTERNAL
614
310
300

FIGURE 6

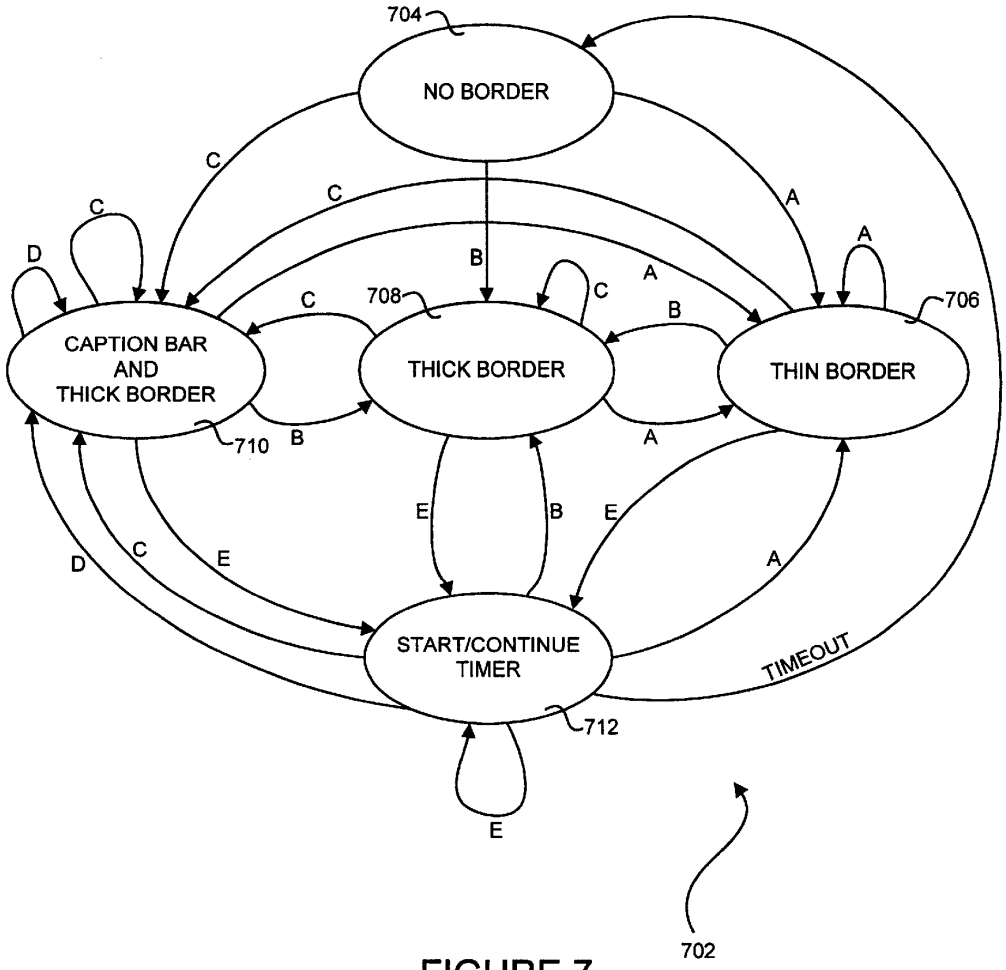
704
NO BORDER
C
C
C
A
A
D
B
A
C
708
C
B
706
CAPTION BAR
AND
THICK BORDER
THICK BORDER
THIN BORDER
710
B
A
E
B
E
D
C
E
A
START/CONTINUE
TIMEOUT
TIMER
712
E
702

FIGURE 7

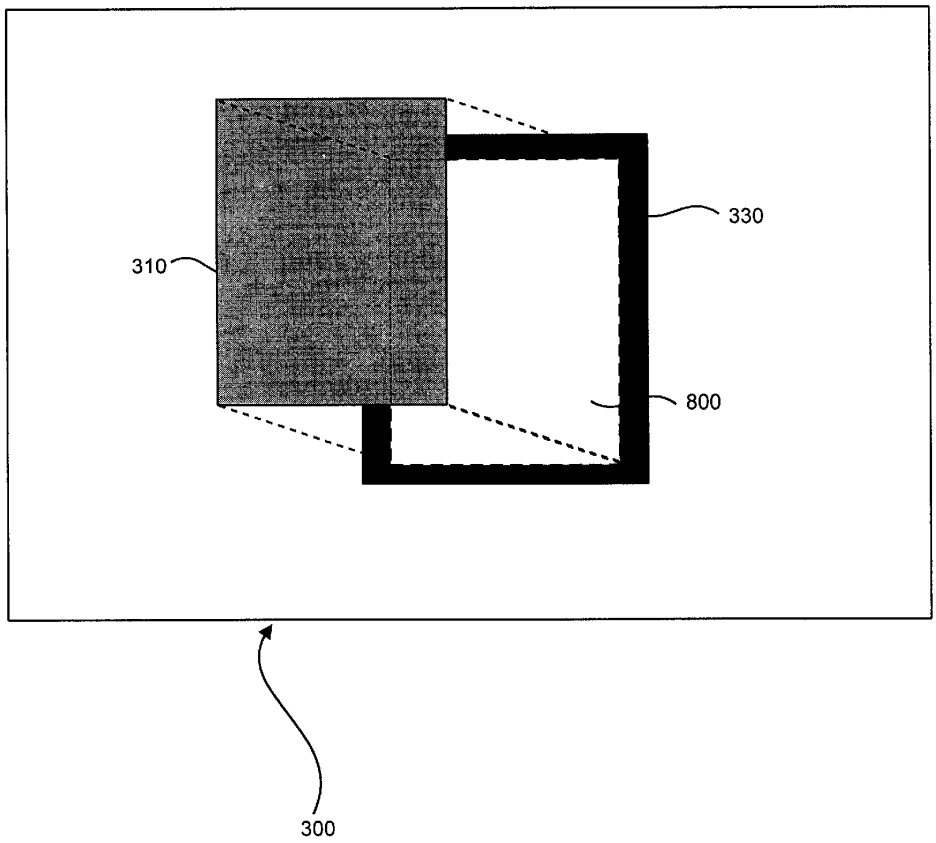

FIGURE 8

MANAGING POSITION AND SIZE FOR A DESKTOP COMPONENT

FIELD OF THE INVENTION

The present invention is directed to the field of graphical user interfaces, and more specifically to the manipulation of visual components in such interfaces.

BACKGROUND OF THE INVENTION

Many of today's computers are accessible through graphical user interfaces (GUIs). One popular implementation is Windows 95, by Microsoft Corporation, of Redmond, Wash., which is a windows-based operating system, in which multiple applications may independently execute under the operating system, each within its own separate window.

In a windows-based operating system, interaction with the computer is presented to the user through a desktop theme, under which commonly used applications and/or documents are displayed and accessed using graphical icons on the desktop.

In recent years, there has been a tremendous proliferation of computers connected to a global network known as the Internet. A "client" computer connected to the Internet can download digital information from "server" computers connected to the Internet. Client application software executing on client computers typically accept commands from a user and obtain data and services by sending requests to server applications running on server computers connected to the Internet. A number of protocols are used to exchange commands and data between computers connected to the Internet. The protocols include the File Transfer Protocol (FTP), the Hypertext Transfer Protocol (HTTP), the Simple Mail Transfer Protocol (SMTP), and the "Gopher" document protocol.

The HTTP protocol is used to access data on the World Wide Web, often referred to as "the Web." The World Wide Web is an information service on the Internet providing documents and links between documents. The World Wide Web is made up of numerous Web sites around the world that maintain and distribute electronic documents. A Web site may use one or more Web server computers that store and distribute documents in one of a number of formats including the Hypertext Markup Language (HTML). An HTML document contains text and metadata or commands providing formatting information. HTML documents also include embedded "links" that reference other data or documents located on any Web server computers. The referenced documents may represent text, graphics, or video in respective formats.

A Web browser is a client application or operating system utility that communicates with server computers via FTP, HTTP, and Gopher protocols. Web browsers receive electronic documents from the network and present them to a user. Internet Explorer, available from Microsoft Corporation, of Redmond, Wash., is an example of a popular Web browser application.

In addition to data and metadata, HTML documents can contain embedded software components containing program code that perform a wide variety of operations. These software components expand the interactive ability of an HTML document's user interface. The components can perform other operations, such as manipulating data and playing audio or video clips. ActiveX is a specification

developed by Microsoft Corporation for creating software components that can be embedded into an HTML document. Java is a well-known programming language that can be used to develop components called "applets," which are transmitted with HTML documents from Web servers to client computers. JavaScript and VBScript are scripting languages that are also used to extend the capabilities of HTML. JavaScript and VBScript scripts are embedded in HTML documents. A browser executes each script as it reaches the position in the script during interpretation of the HTML document.

With today's windows-based operating systems, which are multi-tasking, a user may use a web browser to open multiple windows, each with different content. Since each HTML document may contain scripts of various types, which may in turn open additional windows, a user's desktop display can quickly become visually cluttered due to each window having such elements as borders, control tabs, menu bars, title bars, scroll bars, minimize, maximize, and restore buttons, resizing corners, and other elements which provide functionality to windows.

SUMMARY OF THE INVENTION

The present invention provides a control which tracks the position of a pointer on the display screen to monitor its location relative to one or more desktop components. These desktop components, some of which normally benefit from having associated borders, caption bars, and/or other window functionality elements displayed therewith, are displayed as images lacking these elements until relevant pointer events are detected by the control, whereupon the associated element is displayed, thereby reducing visual clutter. For instance, when the control detects that the pointer has completely entered a region defined by a desktop component, a thin, one-pixel border is displayed around the desktop component. When the pointer intersects with an edge of the desktop component, a thicker, three-pixel border is displayed. When the pointer is close to the top edge of the desktop element, a caption bar is displayed atop the desktop component. When the pointer moves away from the desktop component, the control disappears, rendering borders and caption bars invisible.

BRIEF DESCRIPTION OF THE DRAWINGS

The foregoing aspects and many of the attendant advantages of this invention will become more readily appreciated as the same becomes better understood by reference to the following detailed description, when taken in conjunction with the accompanying drawings, wherein:

FIG. **1** is a block diagram of a general purpose computer system for implementing the present invention;

FIG. **2** depicts a desktop component having no border;

FIG. **3** depicts a desktop component having a thin border;

FIG. **4** depicts a desktop component having a thick border;

FIG. **5** depicts a desktop component having a title bar;

FIG. **6** illustrates regions around a desktop component representing relevant pointer events according to an aspect of the present invention;

FIG. **7** is a state diagram illustrating an overall operating concept of an embodiment of the present invention; and

FIG. **8** illustrates a desktop component and a control for implementing the present invention.

DETAILED DESCRIPTION OF THE PREFERRED EMBODIMENT

In accordance with the present invention, the system of the present invention executes on a computer, such as a

general purpose personal computer. FIG. **1** and the following discussion are intended to provide a brief, general description of a suitable computing environment in which the invention may be implemented. Although not required, the invention will be described in the general context of computer-executable instructions, such as program modules, being executed by a personal computer. Generally, program modules include routines, programs, objects, components, data structures, etc. that perform particular tasks or implement particular abstract data types. Moreover, those skilled in the art will appreciate that the invention may be practiced with other computer system configurations, including hand-held devices, multiprocessor systems, microprocessor-based or programmable consumer electronics, network PCs, minicomputers, mainframe computers, and the like. The invention may also be practiced in distributed computing environments where tasks are performed by remote processing devices that are linked through a communications network. In a distributed computing environment, program modules may be located in both local and remote memory storage devices.

With reference to FIG. **1**, an exemplary system for implementing the invention includes a general purpose computing device in the form of a conventional personal computer **20**, including a processing unit **21**, a system memory **22**, and a system bus **23** that couples various system components including the system memory to the processing unit **21**. The system bus **23** may be any of several types of bus structures including a memory bus or memory controller, a peripheral bus, and a local bus using any of a variety of bus architectures. System timing is provided by a clock signal (not shown) applied to the system bus **23**. The system memory includes read only memory (ROM) **24** and random access memory (RAM) **25**. A basic input/output system **26** (BIOS), containing the basic routines that helps to transfer information between elements within the personal computer **20**, such as during start-up, is stored in ROM **24**. The personal computer **20** further includes a hard disk drive **27** for reading from and writing to a hard disk, not shown, a magnetic disk drive **28** for reading from or writing to a removable magnetic disk **29**, and an optical disk drive **30** for reading from or writing to a removable optical disk **31** such as a CD-ROM or other optical media. The hard disk drive **27**, magnetic disk drive **28**, and optical disk drive **30** are connected to the system bus **23** by a hard disk drive interface **32**, a magnetic disk drive interface **33**, and an optical drive interface **34**, respectively. The drives and their associated computer-readable media provide nonvolatile storage of computer readable instructions, data structures, program modules and other data for the personal computer **20**. Although the exemplary environment described herein employs a hard disk, a removable magnetic disk **29** and a removable optical disk **31**, it should be appreciated by those skilled in the art that other types of computer-readable media which can store data that is accessible by a computer, such as magnetic cassettes, flash memory cards, digital versatile disks (also known as Digital Video Disks or DVDs), Bernoulli cartridges, random access memories (RAMs), read only memories (ROMs), and the like, may also be used in the exemplary operating environment.

A number of program modules may be stored on the hard disk, magnetic disk **29**, optical disk **31**, ROM **24** or RAM **25**, including an operating system **35**, one or more application programs **36**, other program modules **37**, and program data **38**. A user may enter commands and information into the personal computer **20** through input devices such as a keyboard **40** and pointing device **42**. Other input devices (not shown) may include a microphone, joystick, game pad, satellite dish, scanner, or the like. These and other input devices are often connected to the processing unit **21** through a serial port interface **46** that is coupled to the system bus, but may be connected by other interfaces, such as a parallel port, game port or a universal serial bus (USB). A monitor **47** or other type of display device is also connected to the system bus **23** via an interface, such as a video adapter **48**. One or more speakers **57** are also connected to the system bus **23** via an interface, such as an audio adapter **56**. In addition to the monitor and speakers, personal computers typically include other peripheral output devices (not shown), such as printers.

The personal computer **20** may operate in a networked environment using logical connections to one or more remote computers, such as remote computers **49** and **60**. Each remote computer **49** or **60** may be another personal computer, a server, a router, a network PC, a peer device or other common network node, and typically includes many or all of the elements described above relative to the personal computer **20**, although only a memory storage device **50** or **61** has been illustrated in FIG. **1**. The logical connections depicted in FIG. **1** include a local area network (LAN) **51** and a wide area network (WAN) **52**, Such networking environments are commonplace in offices, enterprise-wide computer networks, intranets and global networks such as the Internet. As depicted in FIG. **1**, the remote computer **60** communicates with the personal computer **20** via the local area network **51**. The remote computer **49** communicates with the personal computer **20** via the wide area network **52**.

When used in a LAN networking environment, the personal computer **20** is connected to the local network **51** through a network interface or adapter **53**. When used in a WAN networking environment, the personal computer **20** typically includes a modem **54** or other means for establishing communications over the wide area network **52**, such as the Internet. The modem **54**, which may be internal or external, is connected to the system bus **23** via the serial port interface **46**. In a networked environment, program modules depicted relative to the personal computer **20**, or portions thereof, may be stored in the remote memory storage device. It will be appreciated that the network connections shown are exemplary and other means of establishing a communications link between the computers may be used.

In the present invention a composite document including one or more subdocuments visually embedded therein is output to a display. In a present embodiment of the invention, a desktop **300** environment is displayed with one or more desktop components **310**. Referring to FIG. **2**, desktop component **310** is shown in a first state in which the desktop component merely appears as an image on the desktop **300**, rather than as a window with accompanying windows functionality elements such as borders, caption bars, etc. This is the default state for all desktop components where the pointer **320** is not within a predefined region with respect to the desktop component. The concept of regions will be described more fully in the discussion of FIG. **6**.

FIG. **3** depicts a desktop component **310** in a second state in which pointer **320** is displayed completely within an area defined by the desktop component. In this situation, a thin border **330** is displayed around the desktop component **310**. In a present embodiment, the thin border **330** has a one-pixel width, and is used to visually indicate the boundaries of the desktop component. This allows a user to more easily position the pointer on the desktop component boundary for resizing the desktop component, and is especially helpful where there is little contrast between the colors of the desktop **300** and the desktop component.

FIG. **4** depicts the desktop component **310** in a third state in which pointer **320** is in close proximity to, or actually intersecting, an edge of the desktop component. In this situation, a thick border **340** is displayed. In a present embodiment, a three-pixel border is used so that the user may more easily interact with the border, such as for resizing the desktop element.

FIG. **5** depicts the desktop component **310** in a fourth state, in which a caption bar **500** is displayed along an edge of the desktop component. In a present embodiment of the invention, the caption bar is displayed along the top edge of the desktop component for allowing a user to interact with the desktop component, such as for moving the desktop component on the desktop. In a present embodiment of the invention, the caption bar is displayed with a thick border **340** around the other edges, and is provided with a minimize button **510** and a close button **520**, for allowing the user to respectively minimize and close the desktop component. The caption bar is displayed along the top border when pointer **320** is in close proximity to the upper edge of the desktop component. Those skilled in the art will readily appreciate that the caption bar **500** may be displayed along any edge of the desktop component, that any edge may be used as the relevant edge for determining whether the caption bar should be displayed, and that any type of border, including no border may be displayed in conjunction with the caption bar. The caption bar may also include other features, such as a title, not specifically shown in the figures.

FIG. **6** depicts several regions relative to a desktop component **310** and illustrates the creation and deletion of borders and the caption bar based on the position and movement of the pointer **320**. The solid lines in FIG. **6** represent the boundary or perimeter of the desktop component **310**. The dashed lines delineate regions proximate to the desktop component perimeter. For example, when a user positions the pointer **320** within region A **606**, the mechanism of the invention displays a thin border **330** (FIG. **3**) surrounding the desktop component **310**. When the pointer **320** is positioned within region B **608**, the mechanism of the invention displays a thick border **340** (FIG. **4**) surrounding the desktop component **310**. When the pointer **320** is positioned within region C **610**, the mechanism of the invention displays a caption bar **500** (FIG. **5**) above the desktop component **310** and a thick border **340** surrounding the remaining three sides of the desktop component.

Region D **612** represents an area for the caption bar **500**, and only exists when the caption bar **500** is visible. When the caption bar is visible as a result of the pointer being moved into region C **610**, positioning of the pointer within region D **612** causes the mechanism of the invention to maintain the visibility of the caption bar. At times when the caption bar is not visible, the area represented by region D **612** is considered to be part of the external region E **614**, which is the entire area outside of all of the other regions discussed above. When the pointer **320** is moved into region E **614**, the caption bar **500**, the thin border **330**, and the thick border **340**, are not visible. As discussed below, preferably a timer is used to delay changing the state when the pointer moves into the external region E **614**.

FIG. **7** is a state diagram **702** that illustrates the changes in the caption bar and the borders, as affected by movement of the pointer. FIG. **7** is discussed with reference to the regions of FIG. **6**. At a state **704**, the desktop component **310** is displayed with no border and no caption bar. This is the state depicted in FIG. **2**. Movement of the pointer into region A **606** causes a change to state **706**, where a thin border is displayed. This is the state depicted in FIG. **3**. Continued movement of the pointer within region A **606** causes no further change in state.

Returning to state **704**, movement of the pointer within region B **608** causes a change to state **708**, where a thick border is displayed. This is the state depicted in FIG. **4**. Continued movement of the pointer within region C **608** causes no change of state from the state **708**. Returning once again to the no border state **704**, movement of the pointer within the region C **610** causes a change of state to the caption bar state **710**. This is the state depicted in FIG. **5**. Continued movement of the pointer within the caption bar state **610** causes no change of state.

From the thick border state **708**, or the caption bar state **710**, movement of the pointer into the thin border region **606** causes a change to the thin border state **706**. Similarly, movement of the pointer into the thick border region **608** causes a change of state to the thick border state **708**, and movement of the pointer into the caption bar region **610** causes a change of state to the caption bar state **710**. Additionally, because the caption bar is displayed when in the caption bar state **710**, movement of the pointer into the maintain caption bar state **612** causes a return to the caption bar state **710**.

From the thin border state **706**, the thick border state **708**, or the caption bar state **710**, movement of the pointer to the external region E **614** results in a change to the timer state **712**. When the timer state **712** is first entered, a timer is started to count down a predetermined amount of time. While the timer is running, movement into the thin border region **606**, the thick border region **608**, or the caption bar region **610** causes the mechanism of the invention to turn off the timer and return to the thin border state **706**, the thick border state **708**, or the caption bar state **710**, respectively. Additionally, if the caption bar is visible, movement into the maintained caption bar region **612**, while the timer is on, causes a change of state to the caption bar state **710**.

When in the timer state **712**, pointer movements within the external region **614** result in continuation of the timer. If the timer times out, the state changes back to the no border state **704**, where there is no visible border or caption bar.

Although FIGS. **6** and **7** illustrate one actual embodiment of the invention, these are to be considered exemplary, and the invention may include various modifications. For example, it is not required that a timer be used. Instead, any movement of the pointer into the external region **704** can cause a change to the no border state. Additionally, the regions depicted in FIG. **6** may be altered without departing from the spirit and scope of the invention. The invention may also include a state where a caption bar is visible but no border is visible.

FIG. **8** depicts a control for implementing the features of the present invention according to the state diagram shown in FIG. **6**. While, to the user, the appearance on the display is of a desktop component **310** having borders and/or a caption bar, preferably, these elements are not elements of the desktop component. Rather, a border **330** and a caption bar **500** are elements of the control **800**. In a present embodiment of the invention, the control **800** is implemented as an ActiveX control referred to as deskmovr. The deskmovr control may be used both with desktop components that are windowed objects as well as those that are windowless objects. A present embodiment of a desktop environment according to the present invention is known as the Active Desktop by Microsoft Corporation of Redmond, Wash. Under this desktop environment, a windowless object cannot be displayed in front of a windowed object. Since the

deskmovr control is displayed directly a desktop component, both a windowed instance and a windowless instance is provided for in the deskmovr control. A parameter is passed to the deskmovr control indicating whether the desktop component is a windowed object or a windowless object so that the appropriate instance of the deskmovr control is used. The deskmovr control may also be used in an HTML environment, where the components, or subdocuments, are portions of HTML pages. In order for the present invention to operate in an HTML environment, the environment should support Dynamic HTML and in-line style sheets with positioning. In a present embodiment of the invention, the HTML environment is provided in the IE4/Trident object model in the Internet Client SDK by Microsoft Corporation of Redmond, Wash. This HTML environment is described more fully in Scott Issacs, Inside Dynamic HTML,

Microsoft Press, Oct. 30, 1997, which is incorporated into the present specification by reference.

The deskmovr control includes a border **330** and a caption bar **500** (not shown in FIG. **8**). When a relevant pointer event occurs, such as when the pointer completely enters the region defined by the desktop component (region A **606** in FIG. **6**), the control moves directly underneath the desktop component, and resizes itself such that each edge of the control is one pixel farther out from a centerpoint than the corresponding edge of the desktop component (state **706** in FIG. **7**). Since the desktop component is superimposed and displayed directly on top of the control, a one-pixel border appears around the desktop component. If the pointer event indicates that a caption bar should be displayed (region C **610** in FIG. **6**; state **710** in FIG. **7**), the deskmovr control additionally displays the caption bar. When a thick border is indicated (e.g., when the pointer enters region B **608** of FIG. **6**), the deskmovr control changes the thickness of the border to three pixels (state **708** in FIG. **7**). In a present embodiment of the deskmovr control, whenever the caption bar is indicated, a thick border is concurrently displayed; however, those skilled in the art will readily appreciate that another element or other combinations of elements may be displayed for any given pointer event without departing from the spirit of the invention.

While the preferred embodiment of the invention has been illustrated and described, it will be appreciated that various changes can be made therein without departing from the spirit and scope of the invention.

The embodiments of the invention in which an exclusive property of privilege is claimed are defined as follows:

1. In a computer system having a display and a pointing device, the pointing device controlling a position of a pointer on the display, a method for manipulating a subdocument visually embedded in a composite document output from the computer to the display, the subdocument having a boundary defining a geometric area within the composite document, the method comprising:

(a) tracking the position of the pointer on display;

(b) monitoring the position of the pointer relative to the subdocument;

(c) displaying a first border around the subdocument when the pointer enters a first predefined region relative to the subdocument; and

(d) displaying a second border around the subdocument when the pointer enters a second predefined region relative to the subdocument.

2. The method of claim **1**, further comprising removing the second border displayed around the subdocument when the pointer moves out of the second predefined region relative to the subdocument.

3. The method of claim **1**, further comprising removing either the first border or second border displayed around the subdocument when the pointer moves to an external region relative to the subdocument and a predetermined amount of time has expired.

4. In a computer system having a display and a pointing device, the pointing device controlling a position of a pointer on the display, a method for manipulating a subdocument visually embedded in a composite document output from the computer to the display, the subdocument having a boundary defining a geometric area within the composite document, the method comprising:

(a) tracking the position of the pointer on display;

(b) monitoring the position of the pointer relative to the subdocument;

(c) displaying a first border around the subdocument when the pointer enters a first predefined region relative to the subdocument; and

(d) displaying a caption bar along an edge of the subdocument when the pointer enters a predefined caption bar region relative to the subdocument.

5. The method of claim **4**, further comprising removing the caption bar displayed along an edge of the subdocument when the pointer moves out of the predefined caption bar region relative to the subdocument.

6. The method of claim **4**, further comprising removing the first border and caption bar displayed along an edge of the subdocument when the pointer moves to an external region relative to the subdocument and a predetermined amount of time has expired.

7. The method of claim **4**, further comprising displaying a second border around the subdocument in conjunction with the caption bar when the pointer enters a predetermined area of the predefined caption bar region relative to the subdocument.

8. The method of claim **7**, further comprising removing the caption bar displayed along an edge of the subdocument and the second border displayed around the subdocument when the pointer moves out of the predefined caption bar region relative to the subdocument.

9. The method of claim **7**, further comprising removing the first border, the caption bar displayed along an edge of the subdocument, and a second border displayed around the subdocument, when the pointer moves to an external region relative to the subdocument and a predetermined amount of time has expired.

* * * * *