US005737560A

United States Patent [19]

Yohanan

[11] Patent Number: 5,737,560

[45] Date of Patent: Apr. 7, 1998

[54] **GRAPHICAL METHOD AND SYSTEM FOR ACCESSING INFORMATION ON A COMMUNICATIONS NETWORK**

[75] Inventor: **Steven J. Yohanan**, San Francisco, Calif.

[73] Assignee: **Silicon Graphics, Inc.**, Mountain View, Calif.

[21] Appl. No.: **580,742**

[22] Filed: **Dec. 29, 1995**

[51] **Int. Cl.**[6] **G06F 3/00**

[52] **U.S. Cl.** **395/349**; 395/329

[58] **Field of Search** 395/349, 329

[56] **References Cited**

U.S. PATENT DOCUMENTS

5,021,976	6/1991	Wexelblat et al.	364/521
5,295,244	3/1994	Dev et al.	395/161

OTHER PUBLICATIONS

Spitz, R.J. et al, "Calalina Marketting Corporation –Company Report," William Blair & Company; ILL, 15 May 1996.

Painter, L., "Microsoft Corporation –Company Report," Merrill Lynch Capital Markels, NY, 12 Mar. 1996.

Kiggen, J., et al, "History And Dynamics of Internet –Industry Report," Prudential Securities, Inc. N.Y. 8 Dec. '95.

http://www.Whollymac.com/ , *Wholly Mac Software Home Page*, Sep. 1995, pp. 1–6.

http://www.ffg.com/gnwin2.html, *ForeFront: GrabNet V2.0 for Windows 3.1*, Feb. 2, 1996, pp. 1–2.

http://atom.co.jp/VOYAGER/WebTools/WebPin/WebPin-Maker–E.html, *WebPinProject*, Jan. 29, 1996, pp. 1–3.

http://home.netscape.com/newsref/pr/newsrelease30.html, *Netscape Press Release*, Jan. 29, 1996, pp. 1–2.

Electronic Mail Message from wollymac@aol.com, Feb. 2, 1996, 1 page.

Microsoft Windows® 95 Operating Manual (excerpt), © 1981–1995 Microsoft Corporation, pp. 39 and 58.

Microsoft Windows® Press Release, *PR Newswire*, Aug. 24, 1995, 3 pages.

Primary Examiner—Raymond J. Bayerl
Assistant Examiner—A. Katbab
Attorney, Agent, or Firm—Sterne, Kessler, Goldstein & Fox, pllc

[57] **ABSTRACT**

A system and computer-based method for permitting a computer system to access a network location using a browser application by activating a desktop icon. The system comprises a first computer readable program code means for causing the computer system to display a desktop icon associated with a file containing a network address corresponding to the network location. When the desktop icon is activated, a second computer usable program code means causes the computer to launch an instance of a browser application or a new window for a currently executing browser application and a third computer usable program code means causes the computer system to pass the network address to the browser application, thereby accessing the network location.

19 Claims, 4 Drawing Sheets

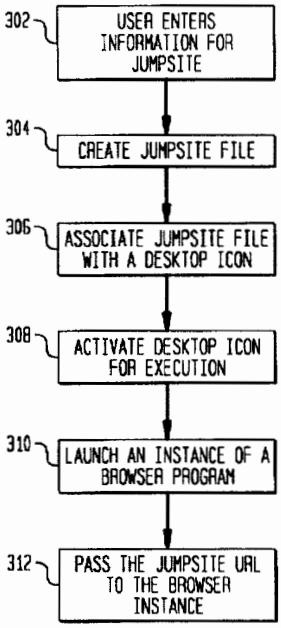

FIG. 1

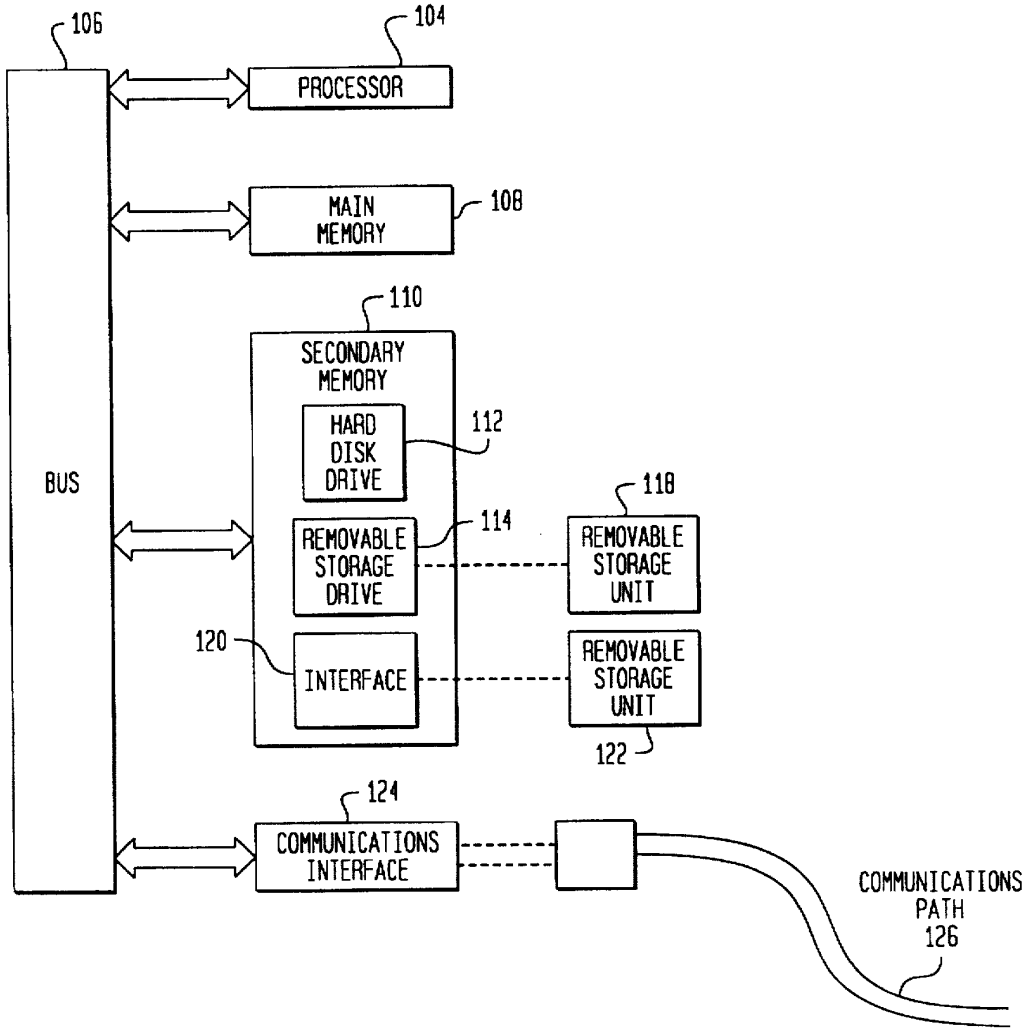
106
104
PROCESSOR
MAIN MEMORY
108
110
SECONDARY MEMORY
HARD DISK DRIVE
112
BUS
118
REMOVABLE STORAGE DRIVE
114
REMOVABLE STORAGE UNIT
120
INTERFACE
REMOVABLE STORAGE UNIT
122
124
COMMUNICATIONS INTERFACE
COMMUNICATIONS PATH 126

FIG. 2

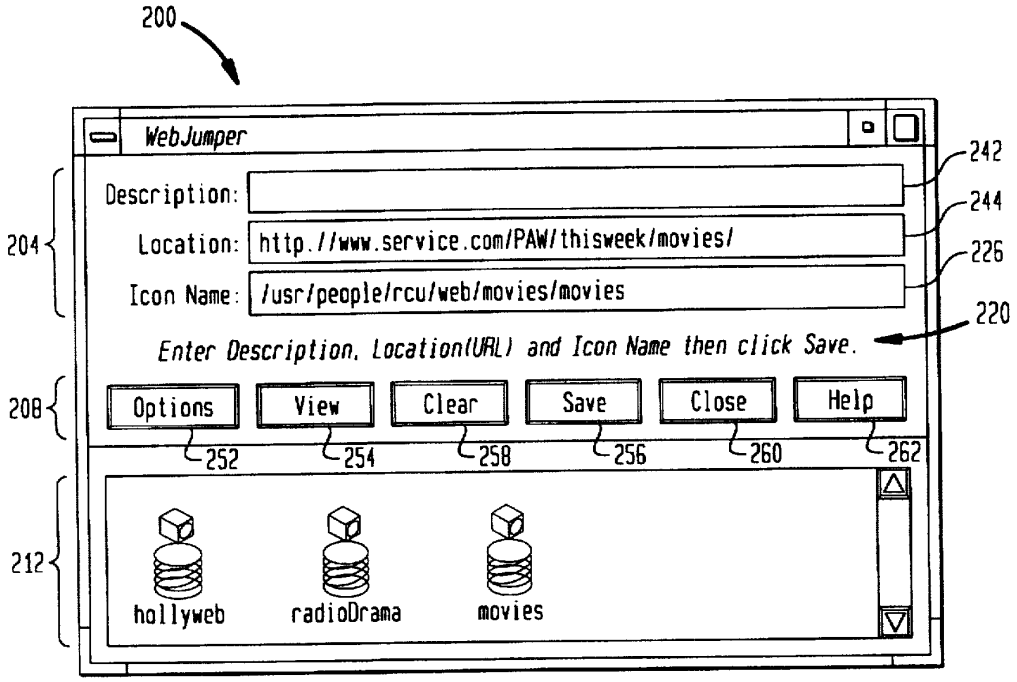
200
WebJumper
Description:
Location: http://www.service.com/PAW/thisweek/movies/
Icon Name: /usr/people/rcu/web/movies/movies
Enter Description, Location(URL) and Icon Name then click Save.
Options
View
Clear
Save
Close
Help
hollyweb
radioDrama
movies
204
208
212
220
226
242
244
252
254
258
256
260
262

FIG. 3

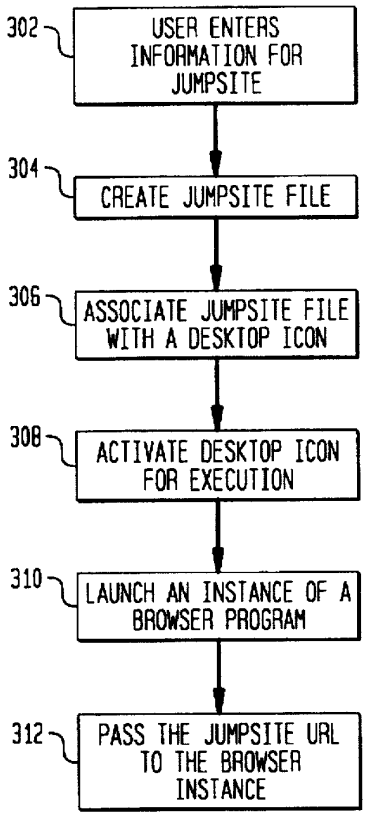
302
USER ENTERS INFORMATION FOR JUMPSITE
304
CREATE JUMPSITE FILE
306
ASSOCIATE JUMPSITE FILE WITH A DESKTOP ICON
308
ACTIVATE DESKTOP ICON FOR EXECUTION
310
LAUNCH AN INSTANCE OF A BROWSER PROGRAM
312
PASS THE JUMPSITE URL TO THE BROWSER INSTANCE

FIG. 4

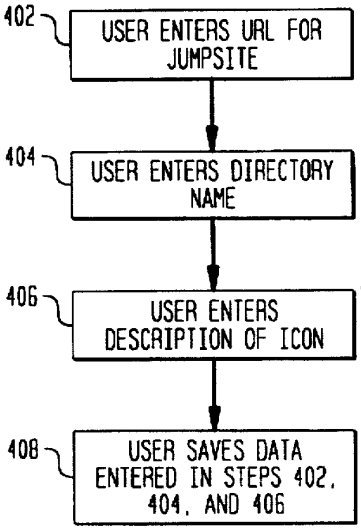
402
USER ENTERS URL FOR JUMPSITE
404
USER ENTERS DIRECTORY NAME
406
USER ENTERS DESCRIPTION OF ICON
408
USER SAVES DATA ENTERED IN STEPS 402, 404, AND 406

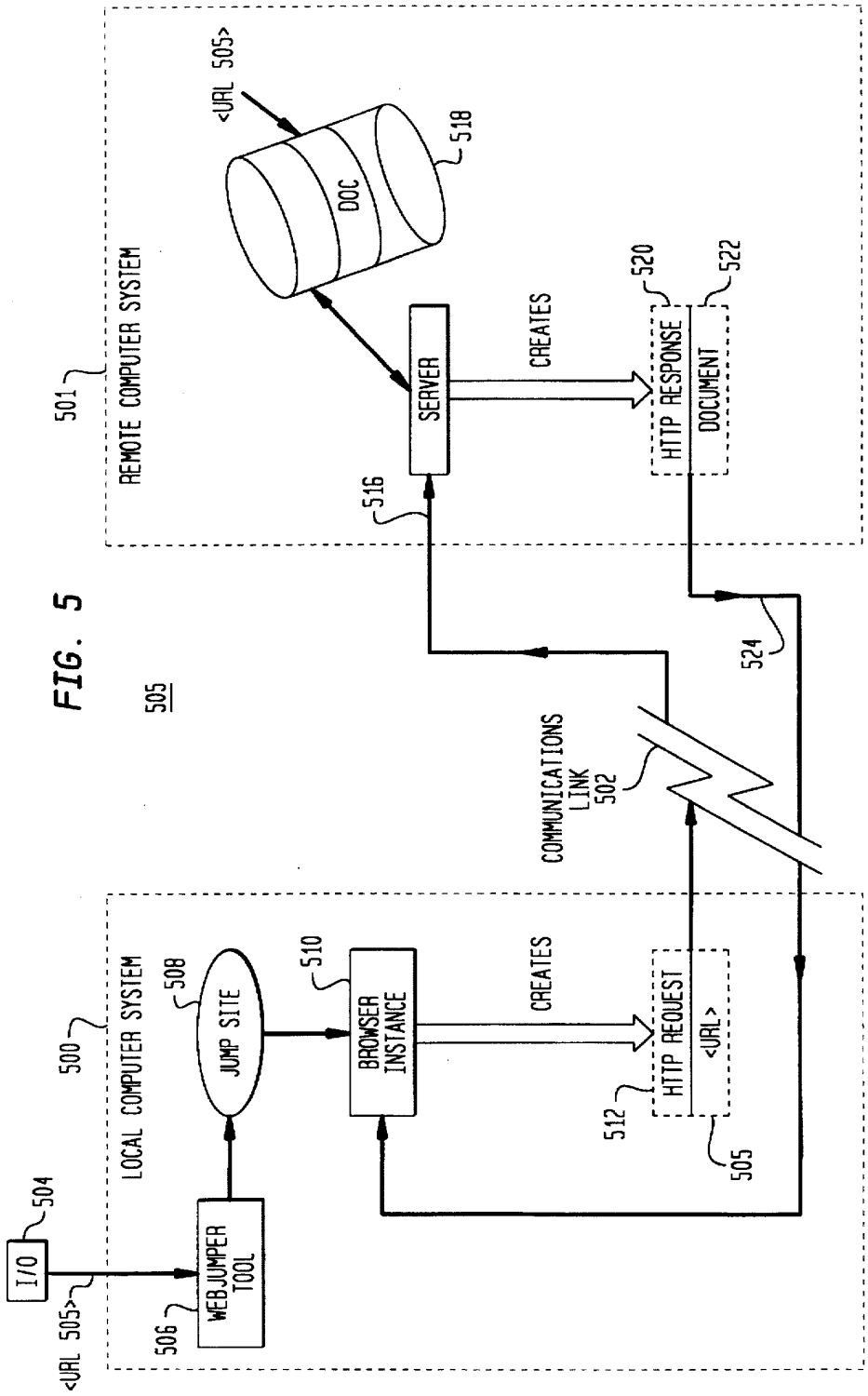
REMOTE COMPUTER SYSTEM
501
<URL 505>
DOC
518
SERVER
CREATES
HTTP RESPONSE
DOCUMENT
520
522
516
524
COMMUNICATIONS LINK
502
LOCAL COMPUTER SYSTEM
500
JUMP SITE
508
BROWSER INSTANCE
510
CREATES
HTTP REQUEST
<URL>
512
505
I/O
504
WEBJUMPER TOOL
506
<URL 505>

FIG. 5

505

GRAPHICAL METHOD AND SYSTEM FOR ACCESSING INFORMATION ON A COMMUNICATIONS NETWORK

BACKGROUND OF THE INVENTION

1. Field of the Invention

The field of the invention relates generally to accessing information on a network, and more particularly, to a system and computer-based method for providing easy access to sites on the World Wide Web.

2. Related Art

A vast array of electronic information infrastructures are rapidly being assembled and used by individuals, organizations, businesses and industry to facilitate the exchange of information and data across both near and far distances. As available computing power at a given price point is increasing, personal computers, workstations and other computing devices are finding their way onto more desktops, into more offices, and into more working environments than ever before imagined. These computing devices are used as the links into the information infrastructure, allowing all forms of electronic communications and data exchange.

This rise of electronic communication is a world-wide phenomenon, globally affecting personal lives as well as all facets of businesses and industry. Be it a local area network linking a few computers together in close proximity, or a wide area network providing information exchange around the globe, more and more businesses and individuals are turning to communications and data exchange via this electronic infrastructure. The electronic information infrastructure is reaching business operations from manufacturing and production to research and development, sales and commerce.

This electronic information infrastructure has become a common source of news, information and entertainment for computer end-users. In this regard, consider the Internet, for example. The Interact is a world-wide set of interconnected computer networks that can be used to access a plethora of information in various forms.

Computer end-users employ network addresses to locate information on the electronic information infrastructure. For example, on the Internet, Uniform Resource Locators (URLs) are used to specify sites such as servers within the World Wide Web (WWW; or the "web"). The web is a distributed hypermedia system and functions as a client-server based, information presentation system.

Files on the web are also referred to as "pages," and are written in HyperText Mark-up Language (HTML). Web pages include hyperlinks to other files. Web pages are typically viewed using an application program called a web browser (also known as an "internet browser" or "browser"), such as Netscape Communications Corporation's (Mountain View, Calif.) NetScape™ browser.

Conventionally, in order to access a network location, an end user must first open a browser application and then enter the URL of a desired network location. The browser connects to the web via a modem or other conventional network interface, thus permitting the user to read and interface with the accessed network location.

The following are example URL formats:

file://wuarchive.wust1.edu/mirrors/msdos/graphics/gifkit.zip

ecp://wuarchive.wust.edu/mirrors

http://www.w3.org:80/default.html

news:alt.hypertext

telnet://dra.com

The first part of the URL, before the colon, specifies the access method. The part of the URL after the colon is interpreted in accordance with the access method specified (for example, ftp is file transfer protocol and is command line-based). In general, two slashes after the colon indicate a machine name (machine:port is also valid).

Having to first access a web browser and then type-in a network location's URL can be tedious. Some browsers permit the user to store frequently accessed network locations to facilitate accesses. This is accomplished through the use of what is sometimes referred to as a bookmark. Through the use of a bookmark, once a browser is opened, the user may be able to quickly access a favorite site by selecting a bookmark previously designated to mark the location of that site.

Increased accesses by individual users on a day-to-day basis demands a more efficient method for accessing network locations.

What is needed is a convenient method to access network locations without having to open a browser and key-in the desired site's URL.

SUMMARY OF THE INVENTION

The present invention is directed to a system and computer-based method providing users quick access to a network location without having to first launch a web browser or key-in the site's URL. The system comprises a first computer readable program code means for causing the computer system to display a desktop icon, called a "jumpsite," which is associated with a file containing a network address corresponding to the network location. When the jumpsite is activated, a second computer usable program code means causes the computer to launch an instance of a browser application or a new window for a currently executing browser application, and a third computer usable program code means causes the computer system to pass the network address to the browser application, thereby accessing the network location.

According to a preferred embodiment of the present invention, jumpsites represent specific Internet network locations, addressed by their URLs. Each jumpsite is a hyperlink to a designated network location that the user frequently explores. Each jumpsite can be graphically manipulated to access its associated network location. These addresses are also referred to as http (or hypertext-transfer protocol) addresses.

One feature of the present invention is that it permits a user to access a desired network location without having to first access a browser application.

Another feature of the present invention is that it permits a user to store network locations in a hierarchical, browser-independent manner.

BRIEF DESCRIPTION OF THE FIGURES

The present invention will be described with reference to the accompanying drawings, wherein:

FIG. 1 is a block diagram illustrating an example environment in which the present invention can operate.

FIG. 2 is a diagram illustrating an example window **200** that serves as the GUI for the WebJumper tool.

FIG. 3 is a flow diagram illustrating the process followed in creating a jumpsite according to one embodiment of the invention.

FIG. 4 is a flow chart illustrating in further detail the step **304** of user entry of information for the creation of the jumpsite.

FIG. 5 is a block diagram illustrating a local computer system **500** (such as computer system **100**, for example) and a remote computer system **501** connected by a communication link **502**.

The preferred embodiment of the invention is described below with reference to these figures where like reference numbers indicate identical or functionally similar elements. Also in the figures, the left most digit of each reference number corresponds to the figure in which the reference number is first used.

DETAILED DESCRIPTION OF THE PREFERRED EMBODIMENTS

1. Introduction and Overview of the Invention

The present invention is directed toward a system and method for allowing a user to access a desired network location without having to first access a browser application. According to the invention, a Graphical User Interface (GUI) icon is provided that allows the user to "jump" directly to the designated network location. When the user selects the icon (e.g., by double-clicking on the icon), a browser application is automatically opened and the designated network location is accessed.

A user may create more than one icon and each icon can be used to designate a different network location. Thus, a user can have a different icon for each of his or her favorite or most frequently visited sites. In one embodiment of the present invention, the icons may have different visual representations. The icons can be stored on the users desktop, in folders, or, in fact, wherever the GUI allows icons to be kept.

2. Icon

An icon refers to an object displayed by an output monitor on the "desktop" (i.e., workspace) of a computer system employing a GUI; the object is associated with a computer file available to the computer's operating system. Standard file operations can each be invoked with respect to the associated file by performing a corresponding graphical manipulation of the icon. For example, a request to execute the program contained in a file might be invoked by double-clicking on the associated desktop icon. Similarly, a request to delete a file might be invoked by graphically moving or "dragging" the associated desktop icon onto the displayed image of a trash can or dumpster; or by cursor-clicking on the associated desktop icon (to "select" that icon) and then cursor-clicking on a pull-down menu command labeled "delete." In response to such actions, the operating system of the local computer system performs the requested operation.

A principal advantage of GUIs employing desktop icons of this nature is that the procedures corresponding to standard file operations are generic for all relevant desktop icons within a particular computer system. In other words, the actions that invoke file operations are independent of the identity of the particular icon and file being operated upon. Consequently, a user need learn only one basic set of relatively intuitive actions to perform standard file operations on the files represented by icons within the user's computer system.

Note that the set of standard file operations and the corresponding icon manipulations vary among different computer platforms and operating systems. The use of icons and standard file operations by clicking and dragging icons is well known and is commonly employed by several well known GUIs, platforms and operating systems such as Windows, Apple, and Unix.

3. Environment of the Invention

Before describing the invention in detail, it is useful to first describe an example environment in which the invention can operate. FIG. 1 is a block diagram illustrating an example environment in which the present invention can operate. The environment is a computer system **100** that includes one or more processors, such as processor **104**. The processor **104** is connected to a communications bus **106**. Various software embodiments are described in terms of this example computer system. After reading this description, it will be apparent to a person skilled in the relevant art how to implement the invention using other computer systems and/or computer architectures.

Computer system **100** also includes a main memory **108**, preferably random access memory (RAM), and can also include a secondary memory **110**. The secondary memory **110** can include, for example, a hard disk drive **112** and/or a removable storage drive **114**, representing a floppy disk drive, a magnetic tape drive, an optical disk drive, etc. The removable storage drive **114** reads from and/or writes to a removable storage unit **118** in a well known manner. Removable storage unit **118** represents a floppy disk, magnetic tape, optical disk, etc., which is read by and written to by removable storage drive **114**. As will be appreciated, the removable storage unit **118** includes a computer usable storage medium having stored therein computer software and/or data.

In alternative embodiments, secondary memory **110** may include other similar means for allowing computer programs or other instructions to be loaded into computer system **100**. Such means can include, for example, a removable storage unit **122** and an interface **120**. Examples can include a program cartridge and cartridge interface (such as that found in video game devices), a removable memory chip (such as an EPROM, or PROM) and associated socket, and other removable storage units **122** and interfaces **120** which allow software and data to be transferred from the removable storage unit **122** to computer system **100**.

Computer system **100** can also include a communications interface **124**. Communications interface **124** allows software and data to be transferred between computer system **100** and external devices via communications path **126**. Examples of communications interface **124** can include a modem, a network interface (such as an ethernet card), a communications port, etc. Software and data transferred via communications interface **124** are in the form of signals which can be electronic, electromagnetic, optical or other signals capable of being received by communications interface **124** via communications path **126**. Note that communications interface **124** provides a means by which computer system **100** can interface to a network such as the Internet.

The present invention is described in terms of this example environment. Description in these terms is provided for convenience only. It is not intended that the invention be limited to application in this example environment. In fact, after reading the following description, it will become apparent to a person skilled in the relevant art how to implement the invention in alternative environments.

4. Software and Hardware Embodiments

The present invention is preferably implemented using software running (that is, executing) in an environment similar to that described above with respect to FIG. 1. In this document, the term "computer program product" is used to generally refer to removable storage device **118** or a hard disk installed in hard disk drive **112**. These computer program products are means for providing software to computer system **100**.

Computer programs (also called computer control logic) are stored in main memory and/or secondary memory **110**. Computer programs can also be received via communications interface **124**. Such computer programs, when executed, enable the computer system **100** to perform the features of the present invention as discussed herein. In particular, the computer programs, when executed, enable the processor **104** to perform the features of the present invention. Accordingly, such computer programs represent controllers of the computer system **100**.

In an embodiment where the invention is implemented using software, the software may be stored in a computer program product and loaded into computer system **100** using removable storage drive **114**, hard drive **112** or communications interface **124**. Alternatively, the computer program product may be downloaded to computer system **100** over communications path **126**. The control logic (software), when executed by the processor **104**, causes the processor **104** to perform the functions of the invention as described herein.

In another embodiment, the invention is implemented primarily in hardware using, for example, hardware components such as application specific integrated circuits (ASICs). Implementation of a hardware state machine so as to perform the functions described herein will be apparent to persons skilled in the relevant art(s).

5. WebJumper and Jumpsites

Having thus described an example environment in which the invention can be implemented, a preferred embodiment of the invention is now described. In a preferred embodiment, a desktop icon on a local computer represents a web page (e.g., a file) on a web site (e.g., a remote server) that is accessed by an http request from a local web browser. As will be apparent to one skilled in the relevant art, a jumpsite can be employed to access other types of files and network locations by other access methods without departing from the spirit and scope of the present invention. As stated above, according to the invention icons are provided which allow the user to access a designated web site, without having to first open a browser application and then access the location.

In one embodiment, the present invention is directed to a computer-based system and method for creating the jumpsites. This system and method are referred to in this document as "WebJumper." WebJumper is a tool that lets users create desktop icon that "jump" the user to designated web sites; these icons are called "jumpsites." The WebJumper tool provides a GUI to "capture" information from the user regarding a designated web site. That is, the GUI permits the user to enter information regarding the designated web site; this information is then stored in a file associated with the icon.

Jumpsites can be placed on the desktop, in a directory, or in an icon catalog page for easy access. Further, jumpsites may be used with any standard browser. Thus, jumpsites provide a browser-independent way for users to organize and access network locations.

FIG. **2** is a diagram illustrating an example window **200** that serves as the GUI for the WebJumper tool. Referring now to FIG. **2**, the WebJumper tool comprises a main window section **204**, a button bar section **208** and an icon display section **212**. Main window section **204** provides a section for the user to enter information pertaining to the jumpsite being created. Button section **208** provides a series of "buttons" that can be activated by the user to select certain features. Display section **212** provides a section where created jumpsites can be displayed to the user.

Main window section **204** provides data entry locations permitting the user to specify a description for a new jumpsite icon, the network address (e.g., URL) of the web site to be associated with the new jumpsite icon, and the icon name.

The description field **242** allows the user to enter a description of the jumpsite being created. This description can be any moniker which describes the jumpsite to the user. This field is optional.

Location field **244** allows the user to enter the URL of the web site designated by the jumpsite being created. According to one embodiment, location field **244** ignores any new line and space characters. This means that users can cut and paste a URL containing new line and space characters into location field **244** without needing to edit the text.

Icon name field **246** provides an entry for the user to enter a name for the jumpsite being created. This name is the name under which the jumpsite is to be stored. In a preferred embodiment, the directory as to where the jumpsite is to be kept is included in icon name field **246**. For the example illustrated in FIG. **2**, the jumpsite is to be named "movies" and is to be kept in a directory "/usr/people/rcu/web/movies" on the system.

Buttons **208** permit the user to perform tasks in connection with creating jumpsite icons. An "Options" button **252**, permits the user to set several preferences. Clicking the Options button **252** activates an options window. In the options window (not shown), the user can enter certain settings or attributes for the jumpsite being created, or can change certain settings or attributes for an existing jumpsite. For example, the options settings can allow the user to identify or select a default web site or the default web browser. For example, the user can select the NetScape Navigator™ browser or the Mosaic browser.

In one embodiment of the present invention, the options window can also permit the user to change or select a default directory for storing jumpsite icons and their corresponding information. One manner by which this can be accomplished is by allowing the user to type a directory path in a field designated Default Icon Location Label (not shown). Once the Default Icon Location is selected, all jumpsite icons created will be saved in the selected default directory unless the user specifies otherwise. If the user wishes a jumpsite to be stored in another directory, the user can specify the directory by, for example, including the directory name in the icon name when creating the jumpsite. In this embodiment, the default directory automatically appears in location field **244** when a new jumpsite is being created. This default directory acts as a "hot list" of the user's favorite web sites. All jumpsites maintained in this hot list are visible to the user when the default directory is selected.

A "View" button **254** allows the user to view icon directories. Activating View button **254** enlarges display section **212** permitting the user to see all jumpsite icons stored in any directory specified by the user. This directory view permits the user to remove, rename, copy, organize into folders, and otherwise manipulate the jumpsite icons that they create or copy into their jumpsite directory.

A "Save" button **256**, when activated, causes information regarding a jumpsite icon that is specified in the main window section **204** to be saved. Thus, once a user has entered a description, location and name for the new jumpsite, the user activates Save button **256** to save this information and create the new jumpsite or modify a previously stored jumpsite.

In one embodiment, where a user wishes to edit a jumpsite, the user can select the jumpsite to be edited from

display section **212** (e.g., by single-clicking it with a pointing device). This selection causes the information about that jumpsite to be visible in main window section **204** where it can be edited by the user. Changing the name causes the jumpsite to be copied, while changing the other fields causes the jumpsite to be edited.

A "Clear" button **258** can be used by the user to clear the information in the description field **242**, location field **244** and icon name field **246**.

A "Close" button **260** is provided for the user to easily close the WebJumper tool. Of course, as is the case with other windowing environments, the tool can be closed by double-clicking on the "dash" in the upper left hand corner of WebJumper window **200**.

A "Help" button **262** is included to provide on-line information concerning the operation, use and features of the WebJumper tool.

WebJumper window **200** also includes a feedback line **220** to prompt the user for input or otherwise guide the user when using the WebJumper tool. The feedback line blanks when the user depresses the Clear, Save or Options button.

Multiple jumpsite icons can be created in a single session by entering information for a first icon in WebJumper window **200**, saving it using Save button **256**, using Clear button **258** to dear fields **242**, **244** and **246**, and then repeating the steps described above for creating and saving the first jumpsite icon.

Note that the user can also categorize jumpsite icons by creating directories or icon catalog pages for different topics. By creating jumpsites by using the WebJumper tool, the user can drag related icons from the default directory, another directory, or from the WebJumper tool itself into other directories or icon catalog pages. Also, the icon can be stored fight on the user's desktop allowing immediate access without having to open directories or other windows.

Jumpsite icon created with the WebJumper tool of the present invention are transportable. Jumpsite icons can be copied by disk, attached to e-mail messages and otherwise transported to another system. In this manner, jumpsite icon attach to e-mail messages in a similar manner that document files, or the like, are attached to conventional Internet messages. If recipients have WebJumper installed on their computer, they can drag an icon out of the message onto the desktop and double-click on it to open the jumpsite. If the recipient of the message does not have WebJumper installed, a text file appears when they double-click the icon. This file contains the UKL information for the web site associated with the jumpsite icon, but does not contain the web page itself.

When a user double clicks on a jumpsite icon the designated web site is opened in a browser application. Mother alternative technique for opening jumpsite icons is to drag them onto the icon representing the browser application. Multiple web sites can be open at the same time. According to one embodiment, each time a jumpsite icon is double-clicked, a new instance of browser **510** is opened and the web site accessed. Therefore, multiple web sites can be open simultaneously on the user's terminal.

Existing jumpsite icons can be edited easily using the View button **254** in WebJumper window **200**. As noted above, all of the jumpsite icons will be displayed in the directory view window which appears at the bottom of the WebJumper window **200**. Alternatively, the user can use commands available in a menu which appears when a jumpsite icon is selected (e.g., by single-clicking on the icon).

6. Creating Jumpsites

One embodiment of the invention is directed toward creating jumpsites. To create a jumpsite, the user utilizes the WebJumper tool. Creation of a jumpsite is described in terms of a WebJumper tool using the example WebJumper window **200** described above. After reading this description, it will become apparent how jumpsites can be created by the WebJumper tool using alternative window configurations. As would be apparent to a person skilled in the relevant art, jumpsites can be created by other methods without departing from the spirit and scope of the present invention.

FIG. **3** is a flow diagram illustrating the process followed in creating a jumpsite according to one embodiment of the invention. Referring now to FIG. **3**, in a step **302** the user enters desired information into WebJumper window **200**. This information includes, at a minimum, the URL for the site to be accessed when jumpsite is selected.

FIG. **4** is a flow chart illustrating in further detail the step **304** of user entry of information for the creation of the jumpsite. Referring now to FIG. **4**, in a step **402**, the user enters the URL for the site he or she desires to access by the jumpsite being created. For example, if the user wishes to create an icon for the Silicon Surf home page of Silicon Graphics, Inc., the user would enter: http://www.sgi.com. Using the example window **200** described above, this information is entered into location field **244**.

Preferably, in a step **404**, the user also enters name and directory information for the jumpsite being created. Again, using the example WebJumper window **204**, the user types a name for the icon in name field **246** of the WebJumper window **200**. Preferably, the name includes directory information where the jumpsite is to be stored. In one embodiment, there is a default directory so the user does not have to enter directory information each time. Following the above example, the user can type silicon.surf as the name of the file for the Silicon Surfhome page.

In a step **406**, the user can add a description of the icon as well. This description can provide the user with a brief description identifying the jumpsite to a greater level of specificity. In the example WebJumper window **200**, the description is entered in description field **242**.

In one embodiment, to enter a description the user clicks on options button **252** to display a WebJumper options window (not shown). The WebJumper options window includes an additional button called "Show Description Field" (also not shown). An "OK" button is also provided to exit the WebJumper options window. When either button is activated, a description field then appears in the main WebJumper window, as described above. At this point, the user can type in the description of the jumpsite icon. Depending on the configuration of the tool, the description field can be set up to always appear when window **200** is opened, or to appear only when specifically requested via the options window.

In a step **408**, once all of the desired information about the jumpsite is entered into WebJumper window **200**, the user can click Save button **256** and the WebJumper tool creates the icon and saves it in the directory specified. Prompts can be included for specifying a different directory in which to save the new jumpsite icon.

FIG. **5** is a block diagram illustrating a local computer system **500** (such as computer system **100**, for example) and a remote computer system **501** connected by a communications link **502**. The information entered by the user in step **302** is represented in FIG. **5** by block **504** labeled input/output (I/O) in FIG. **5**.

Once the user saves a new jumpsite icon or modifies and saves an existing jump site icon, the WebJumper tool, shown

at **506**, creates a jumpsite **508** and saves it as a file on the local computer system **500**. This step of creating the jumpsite **508** and saving it is shown at **304** in FIG. **3**. In one embodiment, step **304** is transparent to the user.

Specifically, the WebJumper tool creates a file that executes when the jumpsite icon is selected for execution by the user. A file is created that, when executed, launches a browser instance **510**, thereby creating an http request **512**.

According to one embodiment of the present invention, the jumpsite file stores the URL but does not contain executable browser code. Rather, the jumpsite file contains only linkage information that, when executed, will cause an operating system of the local computer system **500** to launch browser instance **510** using the stored URL that was specified by the user in the jumpsite icon.

The WebJumper tool forms an association between the newly created jumpsite file and a new desktop icon to represent the information associated with that jumpsite file. The new desktop icon is called a jumpsite icon as discussed above. This association step is shown at **306** on FIG. **3**.

Once a jumpsite icon has been created by the WebJumper tool, it can be moved directly onto the user's desktop by clicking and dragging the icon using a pointing device. The contents of the jumpsite file are not affected by this operation. After jumpsite icons have been created and positioned on the user's desktop, the WebJumper tool can be closed.

7. Using Jumpsites

At any time after a jumpsite icon is created, the user can readily access the web site specified by a given jumpsite icon by simply double-clicking on that jumpsite icon. By positioning one or more jumpsite icons on the user's desktop, the user has direct access to the associated web sites without having to access the WebJumper tool or take the extra step of launching a browser., When the user activates (e.g., double-clicks on) a jumpsite icon, as shown in a step **308** in FIG. **3**, an instance of the selected browser is launched, as shown in a step **310**, and the jumpsite's URL is passed to the browser instance, as shown in a step **312**. The browser then automatically returns the designated web page in an new active browser window on the user's desktop.

In an alternative embodiment, activating the jumpsite icon returns the designated web page in an already-open window of a currently executing browser application.

Referring again to FIG. **5**, once the user double-clicks on a jumpsite icon **508**, an instance **510** of the associated browser is executed. The jumpsite file passes the URL **505** to browser instance **510**, which generates an http request **512** using URL **505**. The http request **512** is transferred over the communications network **502**, as shown generally at **514**. The generation, transfer and servicing of http requests are performed in a conventional manner, as would be apparent to one skilled in the relevant art.

For example, the http request **514** is received at the remote computer system **501** by a server **516**. The server **516** parses the http request, and in response accesses the file specified with the URL **505**. For example, the file can be accessed from a database **518**. The server **516** then creates an http response **520**, attaches a copy of the file **522** to the http response **520** and sends the response and file copy back to the requesting browser instance **510** via communications network **502**, as shown generally at **524**. At the local computer system **500**, browser instance **510** parses the response **524** and ultimately displays the file as a document on the user's display within a window created by browser instance **510**.

8. Conclusion

While various embodiments of the present invention have been described above, it should be understood that they have been presented by way of example, and not limitation. It will be apparent to persons skilled in the relevant art that various changes in form and detail can be made therein without departing from the spirit and scope of the invention. Thus the present invention should not be limited by any of the above-described exemplary embodiments, but should be defined only in accordance with the following claims and their equivalents. All cited patent documents and publications in the above description are incorporated herein by reference.

What is claimed is:

1. A computer program product for permitting a computer system to access a network location using a browser application by activating a desktop icon, said computer program product comprising:

a computer usable medium having computer readable program code means embodied in said medium for causing an application program to execute on the computer system, said computer readable program code means comprising

a computer readable first program code means for causing the computer system to display a desktop icon, said desktop icon associated with a file containing a network address corresponding to the network location,

a computer readable second program code means for, when said desktop icon is activated, causing the computer system to launch the browser application, if the browser application is not currently executing, wherein said computer readable second program code means is separate from the browser application, and

a computer readable third program code means for causing the computer system to access the network location using said network address and the browser application.

2. The computer program product of claim **1**, wherein said computer readable program code means further comprises:

a computer readable fourth program code means for causing the computer system to capture information in said file, said information provided by a user and including said network address.

3. The computer program product of claim **2**, wherein said computer readable program code means is downloaded from a remote storage device.

4. The computer program product of claim **1**, wherein the browser application accesses the network location using Hypertext Transfer Protocol, and wherein said network address is a Uniform Resource Locator.

5. The computer program product of claim **1**, wherein said computer readable program code means further comprises:

a computer readable sixth program code means for causing the computer system to store said desktop icon in a directory.

6. The computer program product of claim **1**, wherein said computer readable program code means further comprises:

a computer readable seventh program code means for causing the computer system to electronically transfer a copy of said desktop icon and said file from the computer system to a further computer system, thereby permitting said further computer system to access said network location using a further browser application by activating said copy of said desktop icon.

7. The computer program product of claim **1**, wherein said computer readable program code means is downloaded from a remote storage device.

8. The computer program product of claim **1**, wherein said computer readable program code means further comprises:

a computer readable further program code means for causing the computer system to copy said desktop icon and said file.

9. The computer program product of claim **1**, wherein said third computer readable program code means comprises:

a computer readable further program code means for causing the computer system to pass said network address to the browser application.

10. A graphical interactive method for permitting a computer system to access a desired document located at a network location, said method comprising the steps of:

(1) displaying a desktop icon, said desktop icon associated with a file containing a network address corresponding to the network location;

(2) interactively selecting said desktop icon for execution;

(3) in response to selecting said desktop icon for execution, launching a browser application if said browser application is not currently executing, wherein said browser application is separate from said file; and

(4) retrieving the desired document from the network location using said browser application and said network address.

11. The method of claim **10**, further comprising the step of:

permitting a user to create said file.

12. The method of claim **10**, wherein the browser application retrieves documents using Hypertext Transfer Protocol, and wherein said file specifies the network location of the documents using a Uniform Resource Locator.

13. The method of claim **10**, further comprising the step of:

(6) storing said desktop icon in a directory.

14. The method of claim **10**, further comprising the step of:

(7) electronically transferring a copy of said desktop icon and said file from the computer system to a further computer system.

15. The method of claim **14**, further comprising the step of:

using said further computer system to perform steps (1) through (3).

16. The method of claim **10**, further comprising the step of:

copying said desktop icon and said file.

17. The method of claim **10**, further comprising the step of:

passing said network address to the browser application.

18. A computer program product for permitting a computer system to access a network location using a browser application by activating a desktop icon, said computer program product comprising:

a computer usable medium having computer readable program code means embodied in said medium for causing an application program to execute on the computer system, said computer readable program code means comprising,

a computer readable first program code means for causing the computer system to display a desktop icon, said desktop icon associated with a file containing a network address corresponding to the network location,

a computer readable second program code means for, when said desktop icon is activated, causing the computer system to launch the browser application, if the browser application is not currently executing, wherein said computer readable second program code means is separate from the browser application,

a computer readable third program code means for causing the computer system to access the network location using said network address and the browser application, and

a computer readable fourth program code means for causing the computer system to permit a user to select a default browser application.

19. A graphical interactive method for permitting a computer system to access a desired document located at a network location, said method comprising the steps of:

(1) displaying a desktop icon, said desktop icon associated with a file containing a network address corresponding to the network location;

(2) interactively selecting said desktop icon for execution;

(3) in response to selecting said desktop icon for execution, launching a browser application if said browser application is not currently executing, wherein said browser application is separate from said file;

(4) retrieving the desired document from the network location using said browser application and said network address; and

(5) permitting a user to select a default browser application.

* * * * *