US006094681A

# United States Patent [19]

**Shaffer et al.**

[11] **Patent Number: 6,094,681**

[45] **Date of Patent: Jul. 25, 2000**

[54] **APPARATUS AND METHOD FOR AUTOMATED EVENT NOTIFICATION**

[75] Inventors: **Shmuel Shaffer**, Palo Alto; **William Joseph Beyda**, Cupertino, both of Calif.

[73] Assignee: **Siemens Information and Communication Networks, Inc.**, Boca Raton, Fla.

[21] Appl. No.: **09/053,212**

[22] Filed: **Mar. 31, 1998**

[51] **Int. Cl.**[7] ..... **G06F 15/173**

[52] **U.S. Cl.** ..... **709/224**; 709/206; 709/207

[58] **Field of Search** ..... 709/224, 207, 709/206, 227, 223; 710/17, 18; 714/39, 47, 51; 379/93.24

[56] **References Cited**

U.S. PATENT DOCUMENTS

| | | | |
|---|---|---|---|
| 4,554,418 | 11/1985 | Toy | 179/2 |
| 5,327,684 | 8/1993 | Record et al. | 395/650 |
| 5,530,868 | 6/1996 | Record et al. | 395/700 |
| 5,657,372 | 8/1997 | Ahlberg et al. | 455/414 |
| 5,721,825 | 2/1998 | Lawson et al. | 395/200.33 |

FOREIGN PATENT DOCUMENTS

2 213 889 3/1998 Canada .

OTHER PUBLICATIONS

"A Value–Added Service with Brains" by R. Gareiss; vol. 24, No. 1, Jan. 1, 1995, pp. 66,68, 70.

"Portable Speech–Activated, Electronic Mail System"; IBM Technical Disclosure Bulletin, vol. 38, No. 7, Jul. 1, 1995, pp. 537–538.

*Primary Examiner*—Mehmet B. Geckil

[57] **ABSTRACT**

A method and system for automatically providing remote notification of a locally detected event includes receiving data and analyzing the content of the data using a data filter of a computer. The data filter is configured to detect an indication of a predetermined event within the data. If the event is detected, the data filter activates a local event indicator associated with the computer. An event indicator monitor determines whether a user response is initiated within a configurable time interval after activation of the event indicator. If the monitor determines that no user response is initiated within the configurable time interval, the monitor transmits an establish-connection message to a control program. The control program responds to the establish-connection message by accessing an event notification message from a database which indicates access numbers of the remote communication devices to which to transmit the event notification message. Communication links are established to the remote communication devices and the event notification message is transmitted to the devices. The data filter is capable of analyzing data included in web page updates transmitted to a web browser of the computer, e-mail messages, scheduling updates and requests transmitted to an electronic calendar of the computer, and scheduling reminders transmitted by the electronic calendar.

**11 Claims, 3 Drawing Sheets**

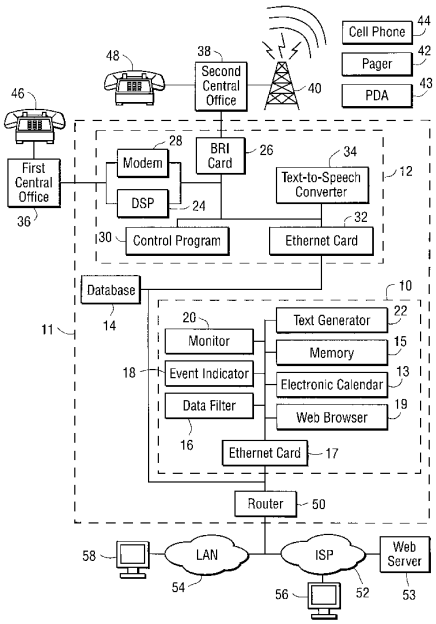

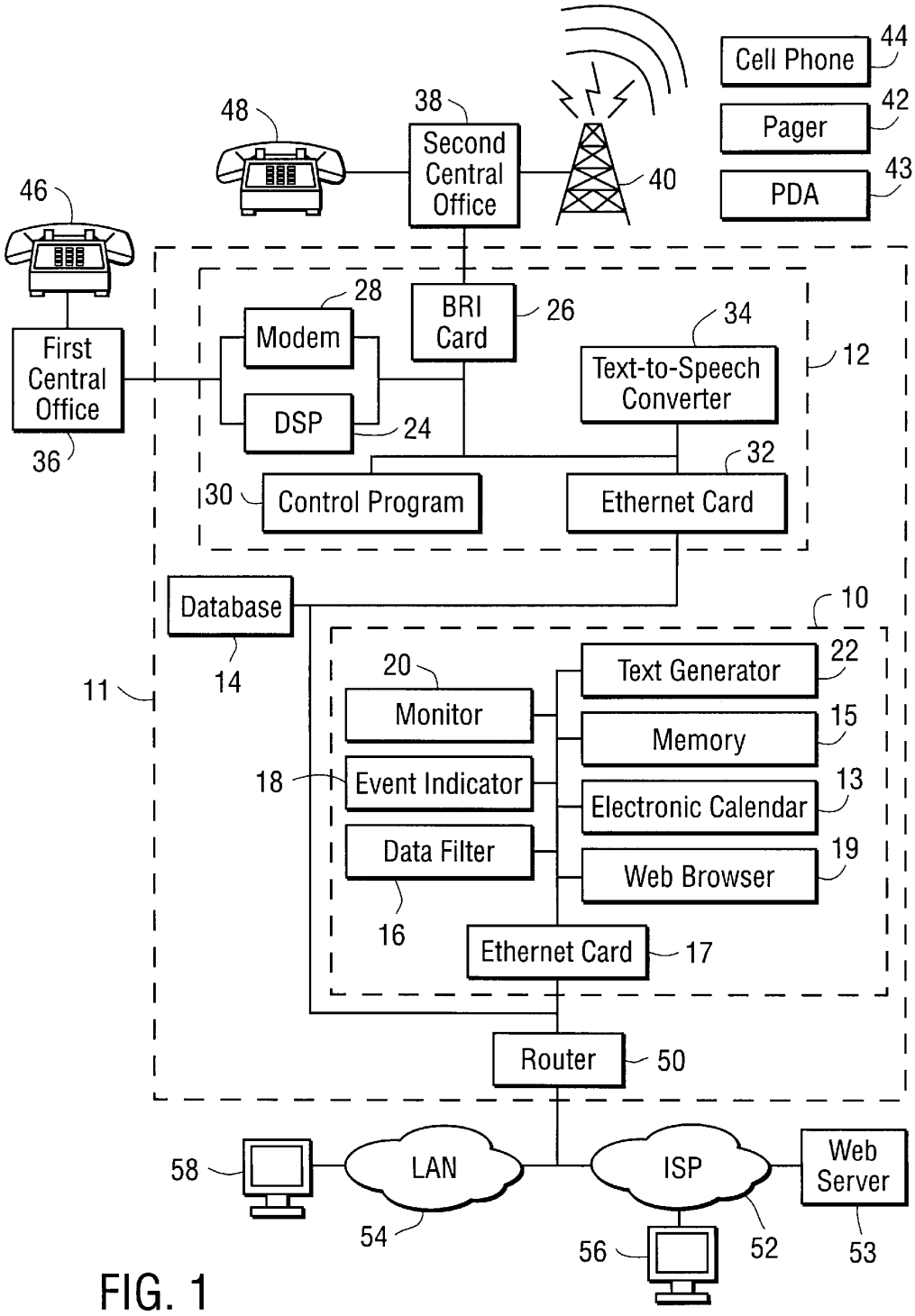
Cell Phone
44
Pager
42
PDA
43
48
38
Second Central Office
40
46
First Central Office
36
28
Modem
DSP
24
BRI Card
26
34
Text-to-Speech Converter
12
30
Control Program
Ethernet Card
32
Database
14
10
11
20
Monitor
18
Event Indicator
Data Filter
16
Text Generator
22
Memory
15
Electronic Calendar
13
Web Browser
19
Ethernet Card
17
Router
50
58
LAN
54
ISP
52
56
Web Server
53

FIG. 1

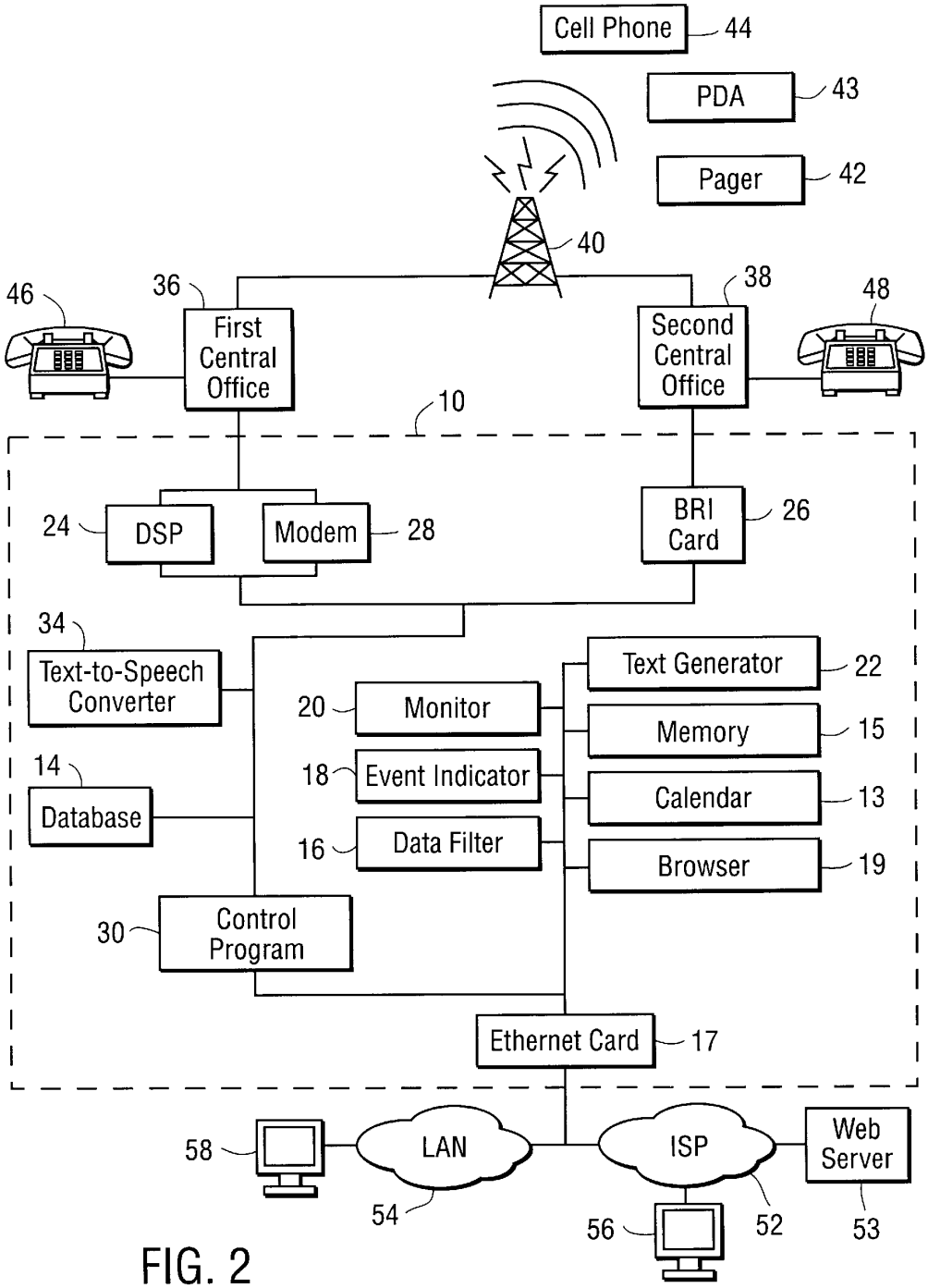
Cell Phone
44
PDA
43
Pager
42
40
46
36
First Central Office
38
Second Central Office
48
10
24
DSP
Modem
28
BRI Card
26
34
Text-to-Speech Converter
Text Generator
22
20
Monitor
Memory
15
14
Database
18
Event Indicator
Calendar
13
16
Data Filter
Browser
19
30
Control Program
Ethernet Card
17
58
LAN
ISP
Web Server
54
56
52
53

FIG. 2

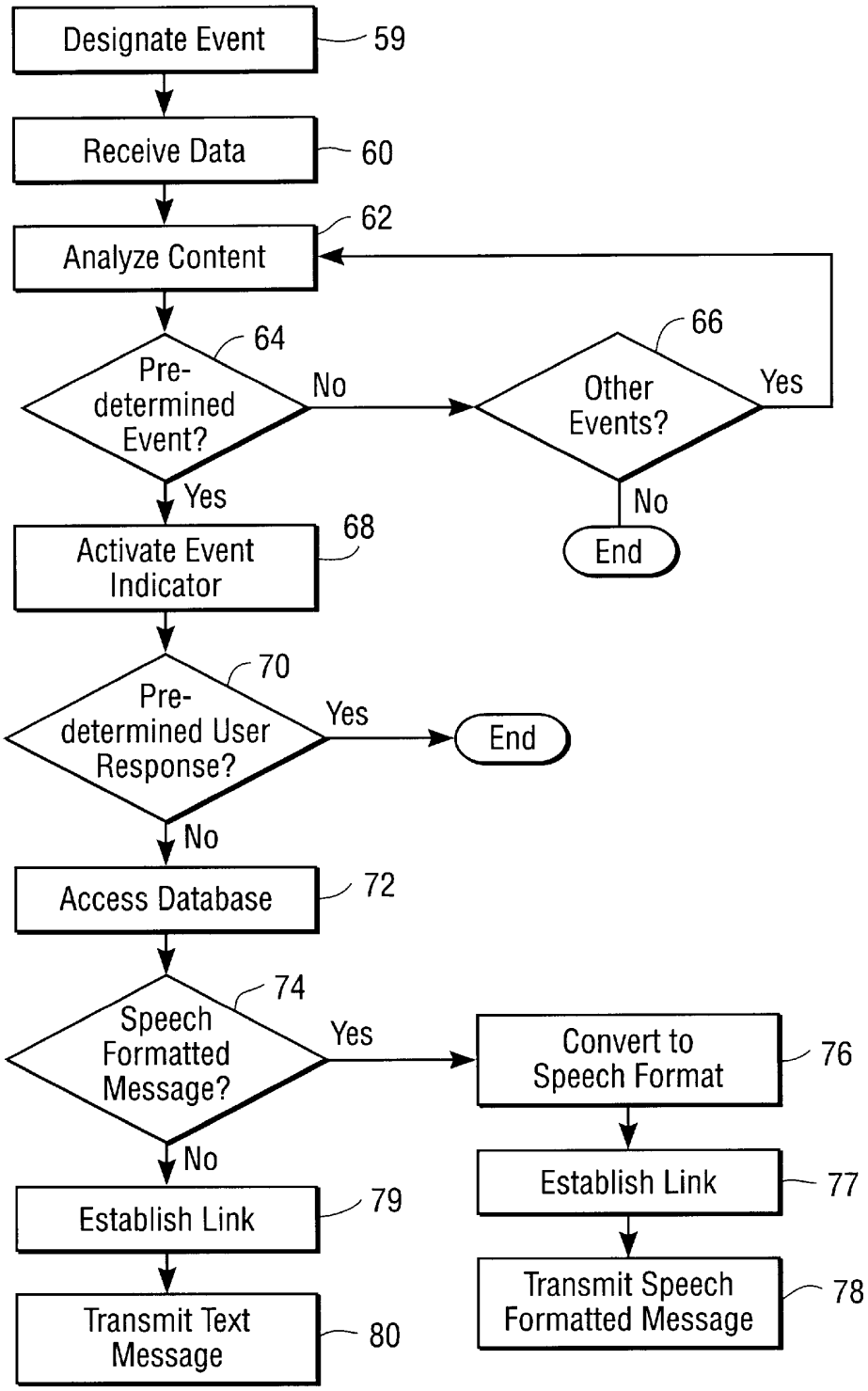
Designate Event
59
Receive Data
60
Analyze Content
62
Pre-determined Event?
64
No
Other Events?
66
Yes
No
End
Yes
Activate Event Indicator
68
Pre-determined User Response?
70
Yes
End
No
Access Database
72
Speech Formatted Message?
74
Yes
Convert to Speech Format
76
Establish Link
77
Transmit Speech Formatted Message
78
No
Establish Link
79
Transmit Text Message
80

FIG. 3

# APPARATUS AND METHOD FOR AUTOMATED EVENT NOTIFICATION

## BACKGROUND OF THE INVENTION

The invention relates generally to a system and method for event notification over a telecommunications network and, more particularly, the invention relates to automatic notification of a locally detected remote event over a telecommunications network.

## DESCRIPTION OF THE RELATED ART

Computing devices, such as work stations and personal computers, have come to occupy a more central role as communication devices with the increasing interconnectivity provided by networks such as the Internet and local area networks (LANs). E-mail enables users to transmit and receive text messages and to attach data files within these messages. Push technology associated with the World Wide Web of the Internet enables a user to subscribe to a service which automatically transmits to the user updates of particular web sites. For instance, a user might subscribe to a push service which provides regular updates of stock prices. Each time the stock prices are updated at a particular web site, or after a selected period of time, the user receives updated information.

A personal computer is also often used to support an electronic calendar. A user is able to enter meetings and appointments into computer memory, and the calendar software automatically provides reminders of upcoming scheduled events. A computer can also be equipped for voice-over-data network telephony, such as internet protocol (IP) telephony. Moreover, the IP-telephony enabled computer can be equipped with a messaging function, so that the computer allows a caller to leave a voice message if the user is unavailable to take a call.

Each of these communication technologies can be configured to alert a user that information has been received or that an attempt has been made to establish a communication link. When an e-mail message is received, the computer can be configured to beep to indicate receipt of the message. Alternatively, a visual indicator such as a flashing icon, can be made to appear on a screen of the computer to indicate that a message has been received. In the electronic calendar example, the electronic calendar can be configured to provide a local reminder of an upcoming event by activating an audio signal and displaying a visual reminder on the computer screen. However, if the user is away from the computer when the event occurs, the user will not receive notification of the event. This is especially troublesome if the event is urgent, for instance, a rescheduling message for a critical meeting.

U.S. Pat. No. 5,721,825 to Lawson et al. describes a system and method for global event notification in a distributed computer environment. A local event registry identifies local event consumers who should be notified when an event occurs. A global event registry identifies which remote servers should be notified of the event, so that event consumers supported by the remote servers can also be notified of the event. When the event occurs, a local server accesses both the local event registry to determine which local event consumers to notify and the global event registry to determine which remote servers require notification. Although the Lawson et al. invention is effective for its intended purpose of providing global event notification, the invention does not solve the problem of remote event notification of a user who is determined to be locally unavailable to receive notification.



What is needed is a system and method for remote user notification of an event when the user is determined to be unavailable to locally receive notification.

## SUMMARY OF THE INVENTION

A method and system for providing automatic event notification to a locally unavailable user of a telecommunications system include providing computers with a data filter for analyzing content of received data (i.e., messages) to determine if the data includes an indication of occurrence of a predetermined event. The data filter communicates with an event indicator associated with the computer to provide a visual alert upon detection of the predetermined event by the data filter. An event indicator monitor is connected to the event indicator to determine whether the user is locally available to receive an event notification. If a specified action is not taken by the user of the computer within a configurable time interval following an activation of the event indicator, the event indicator monitor generates an establish-connection message that is configured to access a system capability to transmit a notification to a remote communication device.

In one embodiment of the system, a server is connected on a data network to control remote notification capability of the system. The server includes a control program configured to trigger a notification sequence in response to receiving the establish-connection message from the event indicator monitor. The sequence is executed by the control program to establish a telecommunications link to a remotely located communication device. A transmitter associated with the server transmits an event notification to a specified remotely located communication device (e.g., a user-specified telephone or pager) via the telecommunications link. Preferably, the event notification includes an identification of the message content of interest to a notified user.

In a preferred embodiment, the messages received by the computer include web page updates received by a router associated with a web server on the World Wide Web of the Internet. For example, the computer may be subscribed to a push service provider which provides scheduled updates of stock prices. The data filter is configured to search the content of updates and to detect a predetermined event in the web page updates, such as a drop in stock X below a certain price, for example $50 per share. Upon receiving a web page update, the data filter determines whether the update includes data reflecting a drop in stock X below $50 per share. If the data filter detects this event, the data filter activates the event indicator associated with the computer, triggering a local notification alert (e.g., an icon appears on a computer screen). The event indicator monitor determines whether the user of the computer is locally available by monitoring whether a specified responsive action occurs within a configurable time interval after activation of the event indicator (e.g., depressing a specific key of a keyboard). If the indicator is not deactivated within the configurable time interval, the monitor transmits the appropriate establish-connection message to the server.

The server accesses the remote notification capability of the system in response to the establish-connection message. The server or computer includes the telephone number(s) for one or more user-specified remote communication devices. These devices might include a wireless pager, a wireless telephone, a wired telephone, and/or a personal digital assistant (PDA). If the notification protocol requires a communication link to an alpha-numeric pager or a PDA, a text

message generator is utilized to construct an event notification text message that includes the identification of the event of interest. If the protocol requires a connection to a telephone or a voice messaging service associated with a pager, a text-to-speech converter converts the text message into a speech format. The server establishes the connections to whichever devices are indicated in the protocol, and the transmitter transmits the message via the communication link. In alternative embodiments, the data received by the computer for content-analysis by the data filter are e-mail messages or electronic calendar scheduling messages.

## BRIEF DESCRIPTION OF THE DRAWINGS

FIG. **1** is a block diagram of a system for providing automatic remote notification of a locally detected event.

FIG. **2** is a block diagram of an alternative embodiment of the system for providing automatic remote event notification of a locally detected event.

FIG. **3** is a process flow of a method for providing automatic remote notification of a locally detected event utilizing the system shown in FIGS. **1** or **2**.

## DETAILED DESCRIPTION

With reference to FIG. **1**, a system for automatically providing remote notification of a locally detected event includes a computing device **10** such as a first personal computer, or a workstation located on a data network **11** such as a first local area network (LAN). A server **12** is located on the first LAN **11** and is enabled to establish telecommunications links to remotely located communication devices through a first central office **36** and a second central office **38**. The first central office **36** supports an analog telephone **46** and the second central office **38** supports an ISDN telephone **48**. The second central office **38** is also connected to a wireless base station **40**, which provides signaling to a wireless pager **42**, a personal digital assistant (PDA) **43**, and a wireless cellular phone **44**. A database **14**, which is accessible to the server **12**, stores an event notification protocol. A text-to-speech converter **34** converts specified event notification messages to a speech format. A router **50** is located on the first LAN **11**, which enables the computer **10** to communicate with a first remote computer **56** via an Internet Service Provider (ISP) and a second remote computer **58** located on a remote LAN **54** and to access a web server **53** of the World Wide Web via the ISP **52**.

The first computer **10** includes a data filter **16** configured to parse through data received via the Internet and the remote LAN **54** to determine whether a predetermined event is included in the received data. For example, the data filter may execute keyword searches for descriptors in the contents of received messages. An event indicator **18** connected to the data filter **16** is responsive to detection of the event by the data filter **16**. An event indicator monitor **20** monitors the event indicator to determine whether a user of the first computer **10** is locally available to receive notification of occurrence of the event. An electronic calendar program **13** allows a user of the computer **10** to store and retrieve scheduling information from memory **15**. A text generator **22** is used to generate an event notification text message which is stored in memory **15** of the computer. An ethernet card **17** enables the first computer **10** to transmit and receive data.

The server **12** includes a control program **30** configured to access the remote event notification capability of the system and to access information from the database **14**. A digital signal processor **24** converts digital signals into a format compatible for processing by an analog communication device. The server **12** further includes a basic rate interface (BRI) card **26** to establish connections over the ISDN and to transmit voice information and data over ISDN connections. A modem **28** enables the server **12** to establish telephonic connections via the first central office **36** and to transmit voice information and data over those connections. Alternatively, an ethernet card **32** is accessed to transmit and receive data over the first LAN **11**.

The web server **53** is enabled for providing a push service in which locally supported web sites and/or remotely located web sites are monitored to determine when updates occur. Subscribers to the push service, such as the first computer **10**, are automatically provided with updates of preselected web sites upon detection of the updates by the web server **53** or at user-configurable times. For example, the user of the computer **10** might subscribe to a push service provided by the web server **53** which transmits scheduled updates of prices of selected stocks.

The data filter **16** can be configured to parse through content of stock price web updates for specific information, such as the price of stock X falling below $50 per share. If the data filter **16** identifies such data, the data filter **16** activates the event indicator **18** to provide local notification of the occurrence of the event (stock X<$50/share) at the first computer **10**. The event indicator **18** can be configured to produce an audio signal, such as a beep, together with an icon displayed on a computer screen (not shown) to indicate that stock X has dropped below the $50 threshold. Alternatively, the screen might simply display the web page update so that, regardless of which application the computer **10** is running, the web page update is displayed on at least a portion of the computer screen. The event indicator **18** is configured to be deactivated upon execution of a predetermined response by the user within a predetermined time interval. For instance, if the user strikes any key on the keyboard within ten seconds of activation, the event indicator **18** is deactivated.

The event indicator monitor **20** monitors the event indicator **18** to determine whether the user deactivates the indicator **18** within the predetermined time interval. If the monitor determines that the indicator **18** has been deactivated, the monitor takes no further action, because it is apparent that the user has received the stock price update information. If the indicator **18** is not deactivated within the predetermined time interval, the monitor **20** accesses an event notification text message from the local memory **15** and causes the text message to be transmitted to the control program **30** of the server **12** together with an establish-connection message. The establish-connection message includes the content of interest (e.g., "stock X<$50/share") and includes an identifier for the first computer **10**.

The text message is assembled by the text generator **22**. The text generator **22** can assemble the text of the message either at the pre-configured direction of a user or through communication with the data filter **16**. In the first instance, the user constructs the message during configuration of the computer **10** for detection of a particular event by using a keyboard (not shown) associated with the computer **10** to enter the message. The text generator **22** responds to the entry made by the user by storing the message in the memory **15** with a message identifier, which is also communicated to the event indicator monitor **20**. The monitor **20** associates the identifier with the particular event, for instance stock X price below $50 per share, which the data filter **16** is configured to detect. If the monitor **20** determines

that the user is unavailable to locally receive notification of the event, the monitor **20** uses the message identifier to access the appropriate event notification message from local memory **15** for transmission to the control program **30**. Alternatively, the text generator **22** can be configured to communicate with the data filter **16** to receive a portion of the web update within which the data filter **16** has detected the event. The text generator **22** constructs an elemental event notification message based on the received portion of the web page update.

The control program **30** accesses the event notification protocol assigned to the first computer **10** from the database **14** using the first computer identifier. The event notification protocol provides instructions to the control program, indicating the remotely located communication devices which are to receive an event notification message. The event protocol might instruct the control program **30** to transmit the message to the pager **42**, the PDA **43**, the cellular phone **44**, and the ISDN phone **48**. Other possible communication devices which can receive an event notification message include the analog telephone **46** and the first and second remote computers **56** and **58**.

The pager **42**, if it is an alpha-numeric pager, the PDA **43**, and the first and second remote computers **56** and **58** are enabled to receive and display alpha-numeric messages. However, the analog telephone **46** and the cellular phone **44** are equipped to receive speech messages, not text messages. The control program **30** utilizes the text-to-speech converter **34** to convert the text message to a speech format suitable for transmission to the analog telephone **46** or the cellular phone **44**, if the event notification protocol indicates that the event notification message must be transmitted to these devices.

The server **12** utilizes the BRI card **26** to establish a connection via the second central office **38**. The analog modem **28** and the DSP **24** are utilized to establish a connection via the first central office **36**. If the event notification protocol requires that the notification message be transmitted to either the first or second remote computers **56** and **58** via e-mail, the server utilizes the ethernet card **32** to transmit the e-mail via the router **50**.

The first computer **10** can also be configured to analyze e-mail it receives to determine if the content of the e-mail includes an indication of a predetermined event. The user can configure the data filter **16** to process received e-mails to determine if the received e-mail was transmitted from a particular individual. If the user is expecting an urgent e-mail message from a particular individual, for instance an important client, the user configures the data filter **16** to recognize e-mails transmitted from the client's e-mail address. Alternatively, the data filter **16** can be configured to analyze the text of e-mail messages to determine whether the e-mail contains certain keywords associated with a subject of interest. The push technology described above can also utilize e-mail as a method for transmitting the web page updates. The data filter **16** analyzes the e-mail content to determine whether the predetermined event is included in the e-mail in the same manner as if the web update were transmitted to the computer's web browser **19**.

The data filter **16** can also analyze messages associated with the electronic calendar **13**. The messages can be either scheduling updates or requests received from a remote device, such as the first remote computer **56** or a scheduling reminder generated by the electronic calendar **13** to locally notify the user of an upcoming appointment. In the first case, the scheduling update/request message transmitted from the first remote computer **56** is analyzed by the data filter **16** to determine if it includes the predetermined event in the same manner as the e-mail messages or the web page updates are analyzed. The analysis can focus on the sender identity or the subject matter of the update/request text. In the case of the scheduling reminder message locally generated by the electronic calendar **13**, the data filter **16** does not have to perform a detailed analysis of the message. Arrival of the scheduling reminder message is itself the predetermined event. It has already been determined that the user requires the scheduling reminder, so the data filter **16** activates the event indicator **18** automatically upon receipt of the scheduling reminder.

The operation of the event notification system described above is not significantly affected by the format of the data received by the first computer **10**. Whether the data is in the format of a web page update directed to the browser **19**, an e-mail message, or an electronic calendar message, the data filter **16** determines whether the event has occurred, the event indicator **18** and the monitor **20** cooperate to determine if the user is locally available to receive notification of the event, and the server **12** performs the remote notification if the user is determined to be locally unavailable.

With reference to FIG. **2**, an alternative embodiment of the event notification system merges the server function into the first computer **10**, so that the computer **10** performs all of the operations of the system. The computer **10** is located on the LAN **54** and is able to communicate with the first and second remote computers **56** and **58** in the same manner as in FIG. **1**. In addition to the event detection and local notification functions enabled by the data filter **16**, the event indicator **18**, and the event indicator monitor **20**, the computer **10**, the control program **30**, database **14**, text-to-speech converter **34**, DSP **24**, modem **28** and the BRI card enable the computer **10** to perform the remote notification as well.

Referring to FIG. **3**, a method for automatically providing remote event notification upon determination that the user is locally unavailable to receive notification includes designating at least one event as being of interest in step **59** and receiving a data transmission in step **60**. As previously discussed, the transmission can include an e-mail message, a web page update directed to the browser **19** of the computer **10**, a scheduling message directed to the electronic calendar **13**, or a scheduling reminder message generated by the electronic calendar **13**. The data is transmitted to the data filter **16**, which has been configured to detect a predetermined event, for instance an e-mail message transmitted from a particular address. In step **62**, the data filter **16** analyzes the content of the data to determine in step **64** whether the data includes the event. Continuing with the e-mail example above, the data filter **16** determines whether the transmission is an e-mail message, and if it is an e-mail message, whether it was transmitted from the address in question. Although the data filter **16** has been described as analyzing data for a single event, it should be understood that the data filter **16** can be configured to detect or recognize multiple events. The data filter **16**, when configured to perform an analysis of data for multiple events, performs the analysis for each event, one at a time, until the data filter **16** has screened all of the events.

If a first predetermined event is not detected, in step **66** the data filter **16** determines if any other events are of concern. If no events remain, the data filter **16** takes no further steps. If other events remain, the data filter returns to step **62** and analyzes the data to determine if it includes a second event. If a predetermined event is detected, the data filter **16** activates the event indicator **18** in step **68**. Activation of the event indicator **18** can include activating an audio alarm

and/or displaying a visual icon which indicates the occurrence of an event.

The event indicator monitor **20** monitors the event indicator **18** to determine in step **70** if a user response is registered within a configurable time interval after activation of the event indicator **18**. The user response can be a keystroke of the computer keyboard (not shown) within ten seconds of activation of the indicator **18**, which disables the indicator **18**. If the monitor **20** detects the user response within ten seconds, the monitor **20** takes no further steps because deactivation of the indicator **18** demonstrates that the user is locally available to receive the event notification. If no response is detected within the configurable time interval, the monitor **20** transmits an establish-connection message to the control program **30**. The control program **30** accesses the event notification protocol from the database **14** in step **72** to determine to which remote communication devices to transmit an event notification message.

Based on the event notification protocol accessed from the database **14**, the control program **30** determines in step **74** whether the message must be converted to a speech-formatted message. If the only remote communication devices to be contacted are enabled for receiving and displaying text messages, then the message does not need to be reformatted. On the other hand, if one of the communication devices is not enabled to display text messages, such as the pager **42**, then the control program utilizes the text-to-speech converter **34** to convert the message to a speech format in step **76**. In step **77**, a communication link to the pager **42** is established. Once the notification message has been converted to a speech format, the server **12** transmits the message to the pager **42** in step **78**. If the notification protocol indicates that a speech-formatted message is not necessary, then the server **12** establishes a communication link in step **79** and transmits the text message to the remotely located communication device, such as the remote computer **56** and **58** or the PDA **43** in step **80**.

What is claimed is:

**1**. A method for providing automatic remote notification of a locally detected event comprising the steps of:

designating at least one event as being of interest to a first user of a data network;

monitoring specified user-intended messages received via said data network for conveying message information to said first user;

electronically analyzing content of said specified messages to determine whether said content is indicative of occurrence of one of said designated events;

determining whether said first user is available to receive an automated event notification at a specified local communication device on said data network if said content of one of said specified user-intended messages is determined to be indicative of occurrence of one of said designated events;

automatically establishing a telecommunications link to a specified remote user communication device in response to a determination that said first user is unavailable to receive said automated event notification at said specified local communication device; and

transmitting said automated event notification to said specified remote user communication device via said telecommunications link;

wherein said step of monitoring said specified user-intended messages includes receiving a web page update from a web server on the World Wide Web, said analyzing step including executing a search of data content of said web page update to detect an indication of an occurrence of one of said designated events.

**2**. A method for providing automatic remote notification of a locally detected event comprising the steps of:

designating at least one event as being of interest to a first user of a data network;

monitoring specified user-intended messages received via said data network for conveying message information to said first user;

electronically analyzing content of said specified messages to determine whether said content is indicative of occurrence of one of said designated events;

determining whether said first user is available to receive an automated event notification at a specified local communication device on said data network if said content of one of said specified user-intended messages is determined to be indicative of occurrence of one of said designated events;

automatically establishing a telecommunications link to a specified remote user communication device in response to a determination that said first user is unavailable to receive said automated event notification at said specified local communication device; and

transmitting said automated event notification to said specified remote user communication device via said telecommunications link;

wherein said step of monitoring said user-intended specified messages includes receiving a scheduling message associated with an electronic calendar, said analyzing step including determining whether content of said scheduling message includes an indication of one of said designated events.

**3**. A method for providing automatic remote notification of a locally detected event comprising the steps of:

designating at least one event as being of interest to a first user of a data network;

monitoring specified user-intended messages received via said data network for conveying message information to said first user;

electronically analyzing content of said specified messages to determine whether said content is indicative of occurrence of one of said designated events;

determining whether said first user is available to receive an automated event notification at a specified local communication device on said data network if said content of one of said specified user-intended messages is determined to be indicative of occurrence of one of said designated events;

automatically establishing a telecommunications link to a specified remote user communication device in response to a determination that said first user is unavailable to receive said automated event notification at said specified local communication device; and

transmitting said automated event notification to said specified remote user communication device via said telecommunications link;

wherein said analyzing step further includes determining at least one of whether content is indicative of an appointment within a predetermined time interval and whether said content is indicative of an appointment with a predetermined party.

**4**. A method for providing automatic remote notification of a locally detected event comprising the steps of:

designating at least one event as being of interest to a first user of a data network;

monitoring specified user-intended messages received via said data network for conveying message information to said first user;

electronically analyzing content of said specified messages to determine whether said content is indicative of occurrence of one of said designated events;

determining whether said first user is available to receive an automated event notification at a specified local communication device on said data network if said content of one of said specified user-intended messages is determined to be indicative of occurrence of one of said designated events;

automatically establishing a telecommunications link to a specified remote user communication device in response to a determination that said first user is unavailable to receive said automated event notification at said specified local communication device; and

transmitting said automated event notification to said specified remote user communication device via said telecommunications link;

wherein said step of analyzing said content includes filtering data for predetermined content representative of an occurrence of said one of said designated events, the method further comprising the steps of creating a notification message indicative of said occurrence of said one of said designated events and converting said notification message to a speech format, said transmitting step including transmitting said speech formatted notification message to one of a telephone and a voice messaging system associated with a pager.

**5**. A system for automatically providing event notification over a telecommunications network comprising:

means for receive data addressed to a local communication device, said local communication device and said receiving means being connected to a data network;

means, operatively coupled to said receiving means, for filtering said user addressed data for content indicative of an occurrence of a predetermined event;

means, in communicative contact with said filtering means, for determining whether a user is locally accessible at said local communication device to receive an automated event notification of said occurrence of said predetermined event;

means, responsive to said determining means, for automatically establish a telecommunications link to a remotely located communication device in response to a determination of user inaccessibility at said local communication device; and

means for transmitting said automated event notification to said remotely located communication device via said telecommunications link

wherein said receiving means is selectively connected to a web server of the World Wide Web, said data addressed to said local communication device including a web page update transmitted from a router associated with said web server, said filtering means being enabled to filter said web page update for said content indicative of said occurrence of said predetermined event.

**6**. A system for automatically providing event notification over a telecommunications network comprising:

means for receive data addressed to a local communication device, said local communication device and said receiving means being connected to a data network;

means, operatively coupled to said receiving means, for filtering said user addressed data for content indicative of an occurrence of a predetermined event;

means, in communicative contact with said filtering means, for determining whether a user is locally accessible at said local communication device to receive an automated event notification of said occurrence of said predetermined event;

means, responsive to said determining means, for automatically establish a telecommunications link to a remotely located communication device in response to a determination of user inaccessibility at said local communication device; and

means for transmitting said automated event notification to said remotely located communication device via said telecommunications link

wherein said data addressed to said local communication device includes a scheduling message associated with an electronic calendar.

**7**. The system of claim **5** or **6** wherein said transmitting means is configured to transmit said text message to said remotely located communication device, said remotely located communication device being one of a personal digital assistant (PDA).

**8**. A system for automated telecommunications messaging within a network having an event-notification capability for supporting transmissions of notifications to communication devices comprising:

a plurality of computing devices, each computing device including:

(a) an input connected to said network to receive user-intended data configured for display of said data in a human-perceivable format;

(b) data filter means for searching content of said data to recognize subject matter indicative of at least one user-configurable condition;

(c) condition-indicator means for triggering a visual alert at said computing device in response to recognition of one of said user-configurable conditions; and

(d) an event-indicator monitor configured to generate and transmit an establish-connection message in response to passage of a time-out period following initiation of said visual alert by said condition-indicator means, said establish-connection message being configured to initiate access to said event-notification capability of said network.

**9**. The system of claim **7** further comprising means, associated with said transmitting means, for converting said text message to a speech message, said transmitting means being configured to transmit said speech message to said remotely located communication device.

**10**. The system of claim **8** further comprising a server connected to each said computing device, said server having a control program responsive to receiving one of said establish-connection messages from one of said computer devices, said control program triggering a telecommunications link to a specific remote communication device as a response to said establish-connection message.

**11**. The system of claim **10** further comprising transmission means connected to said server for transmitting a notification message to said specific remote communication device via said telecommunications link.

* * * * *