US007941656B2

(12) **United States Patent**
Hans et al.

(10) **Patent No.: US 7,941,656 B2**
(45) **Date of Patent: May 10, 2011**

(54) **CARD DEVICE FOR LOADING APPLICATIONS TO A MOBILE DEVICE**

(75) Inventors: **Sebastian J. Hans**, Berlin (DE); **Eduard K. de Jong**, Dyfed (GB)

(73) Assignee: **Oracle America, Inc.**, Redwood City, CA (US)

(*) Notice: Subject to any disclaimer, the term of this patent is extended or adjusted under 35 U.S.C. 154(b) by 1458 days.

(21) Appl. No.: **11/374,937**

(22) Filed: **Mar. 13, 2006**

(65) **Prior Publication Data**

US 2006/0212537 A1 Sep. 21, 2006

(30) **Foreign Application Priority Data**

Mar. 16, 2005 (EP) 05005728

(51) **Int. Cl.**
G06F 9/00 (2006.01)
G06F 9/24 (2006.01)

(52) **U.S. Cl.** **713/2**; 713/1; 713/100; 713/191; 713/189; 713/190; 455/418; 455/419; 455/420; 455/558; 455/414.1; 455/432.3; 455/403; 709/220; 709/217; 717/168; 717/169; 717/170; 717/171; 717/172

(58) **Field of Classification Search** ..... None
See application file for complete search history.

(56) **References Cited**

U.S. PATENT DOCUMENTS

6,039,247	A *	3/2000	Reccia et al.	235/379
6,250,557	B1 *	6/2001	Forslund et al.	235/492
6,788,926	B1 *	9/2004	Frangione et al.	455/405
6,978,453	B2 *	12/2005	Rao et al.	717/171
6,996,818	B2 *	2/2006	Jacobi et al.	717/170
7,058,890	B2 *	6/2006	George et al.	715/728
7,139,372	B2 *	11/2006	Chakravorty et al.	379/114.01
7,197,322	B1 *	3/2007	Rayburn et al.	455/456.1
7,258,267	B2 *	8/2007	Choi	235/379
2002/0128984	A1 *	9/2002	Mehta et al.	705/71
2002/0131404	A1 *	9/2002	Mehta et al.	370/352
2003/0023963	A1	1/2003	Birkholz et al.	717/172
2007/0079142	A1 *	4/2007	Leone et al.	713/193
2009/0318171	A1 *	12/2009	Backholm et al.	455/466
2010/0146500	A1 *	6/2010	Joubert et al.	717/178

FOREIGN PATENT DOCUMENTS

EP	1331559	A2 *	7/2003
EP	1 498 812		1/2005
EP	1538855	A2 *	6/2005
WO	WO 02/44892		6/2002
WO	WO 03/073273		9/2003

* cited by examiner

Primary Examiner — Syed A. Zia
(74) *Attorney, Agent, or Firm* — Gunnison, McKay & Hodgson, L.L.P.; Forrest Gunnison

(57) **ABSTRACT**

A system for loading application identifiers to a mobile device includes a mobile device, a card device insertable into the mobile device, and an application center. The card device is adapted to determine an effective mobile device identifier of the mobile device, and transmit the effective mobile device identifier to the application center. The effective mobile device identifier is based at least in part on the result of a process performed by the card device. The application center is adapted to (1) determine zero or more allotted application identifiers and zero or more application identifiers of applications loaded on the mobile device based at least in part on the effective mobile device identifier, (2) identify at least one application identifier of the zero or more allotted application identifiers which does not form part of the zero or more application identifiers of applications loaded on the mobile device, and (3) load the at least one application identifier to the mobile device.

22 Claims, 10 Drawing Sheets

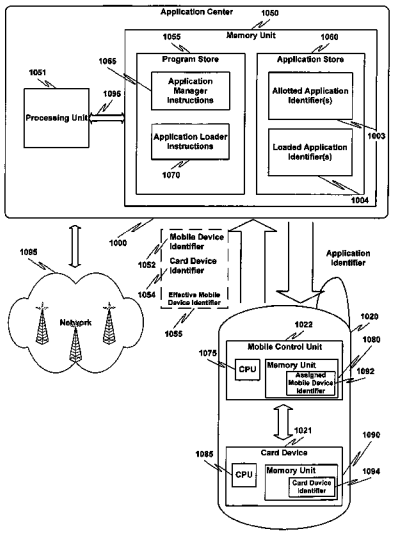

SAMSUNG EX-1073

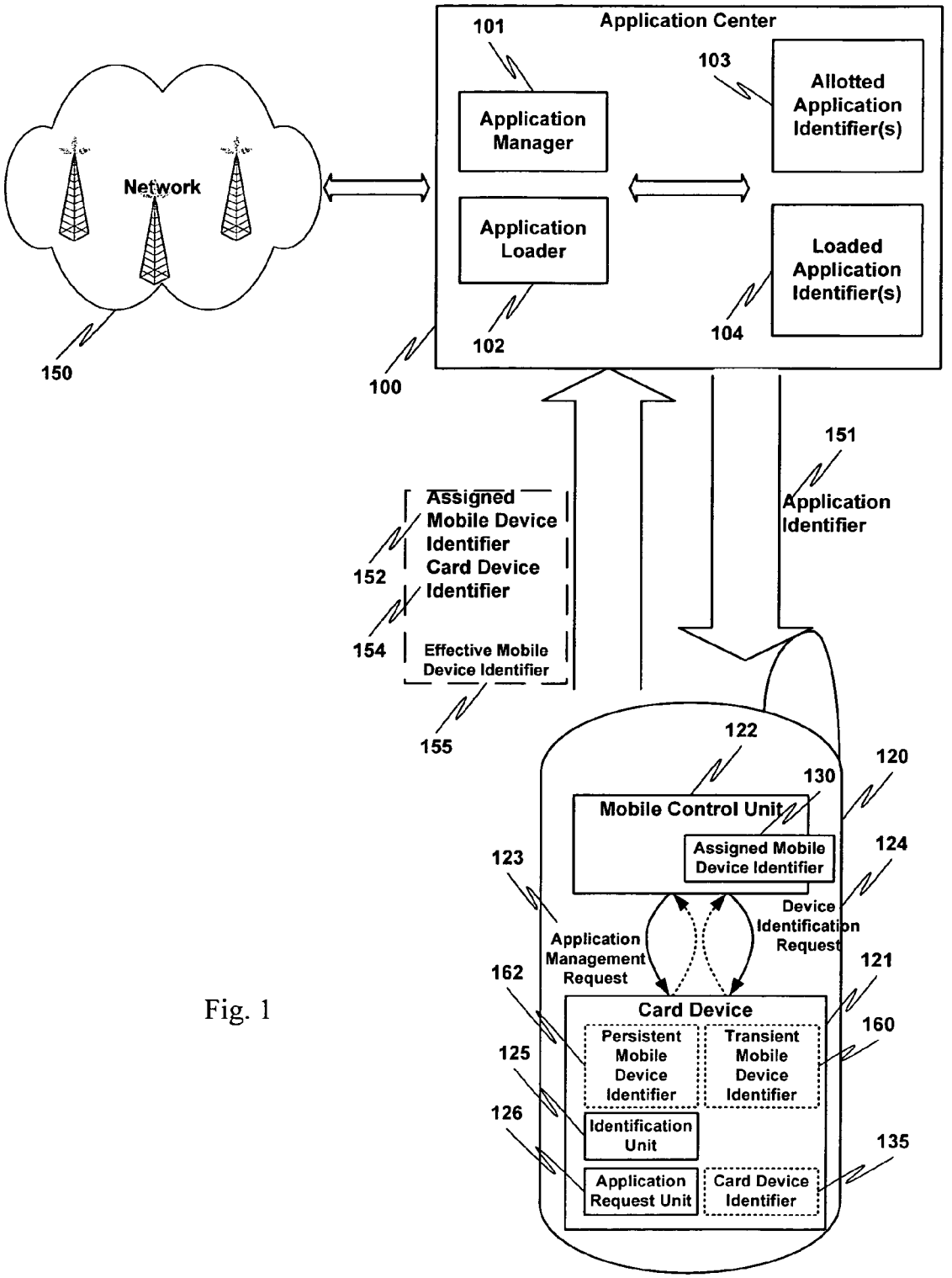
Application Center
101
Application Manager
103
Allotted Application Identifier(s)
Network
Application Loader
Loaded Application Identifier(s)
102
104
150
100
151
Application Identifier
Assigned Mobile Device Identifier
152
Card Device Identifier
154
Effective Mobile Device Identifier
155
122
120
130
Mobile Control Unit
Assigned Mobile Device Identifier
123
124
Device Identification Request
Application Management Request
121
162
Card Device
160
Persistent Mobile Device Identifier
Transient Mobile Device Identifier
125
Identification Unit
126
135
Application Request Unit
Card Device Identifier

Fig. 1

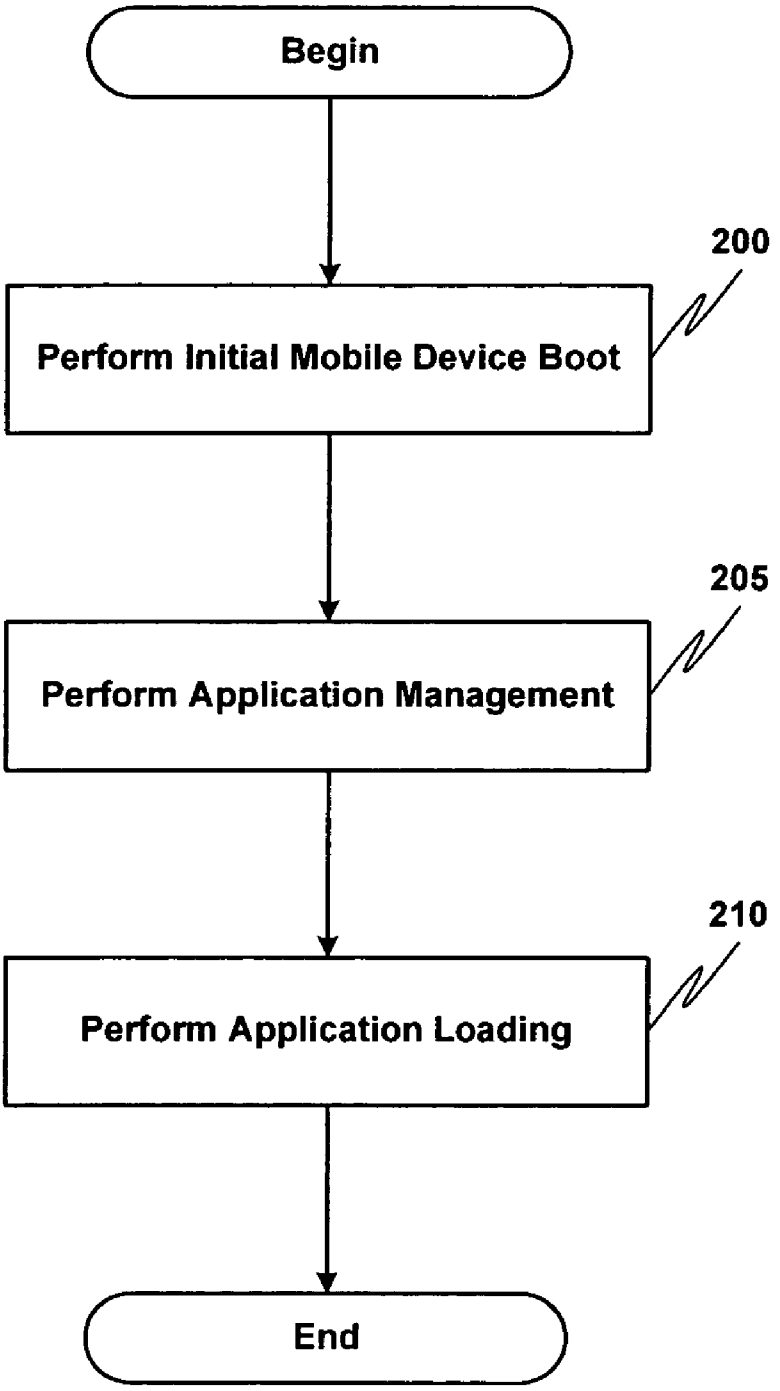
Begin
200
Perform Initial Mobile Device Boot
205
Perform Application Management
210
Perform Application Loading
End

Fig. 2

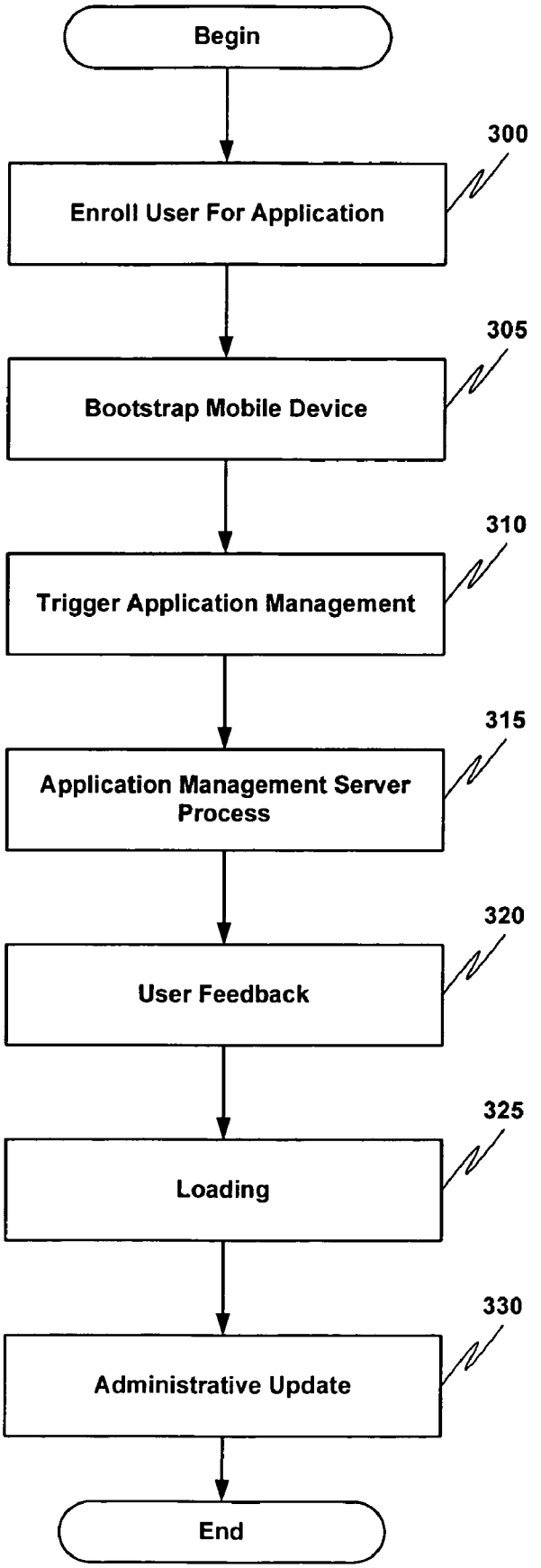
Begin
300
Enroll User For Application
305
Bootstrap Mobile Device
310
Trigger Application Management
315
Application Management Server Process
320
User Feedback
325
Loading
330
Administrative Update
End

Fig. 3

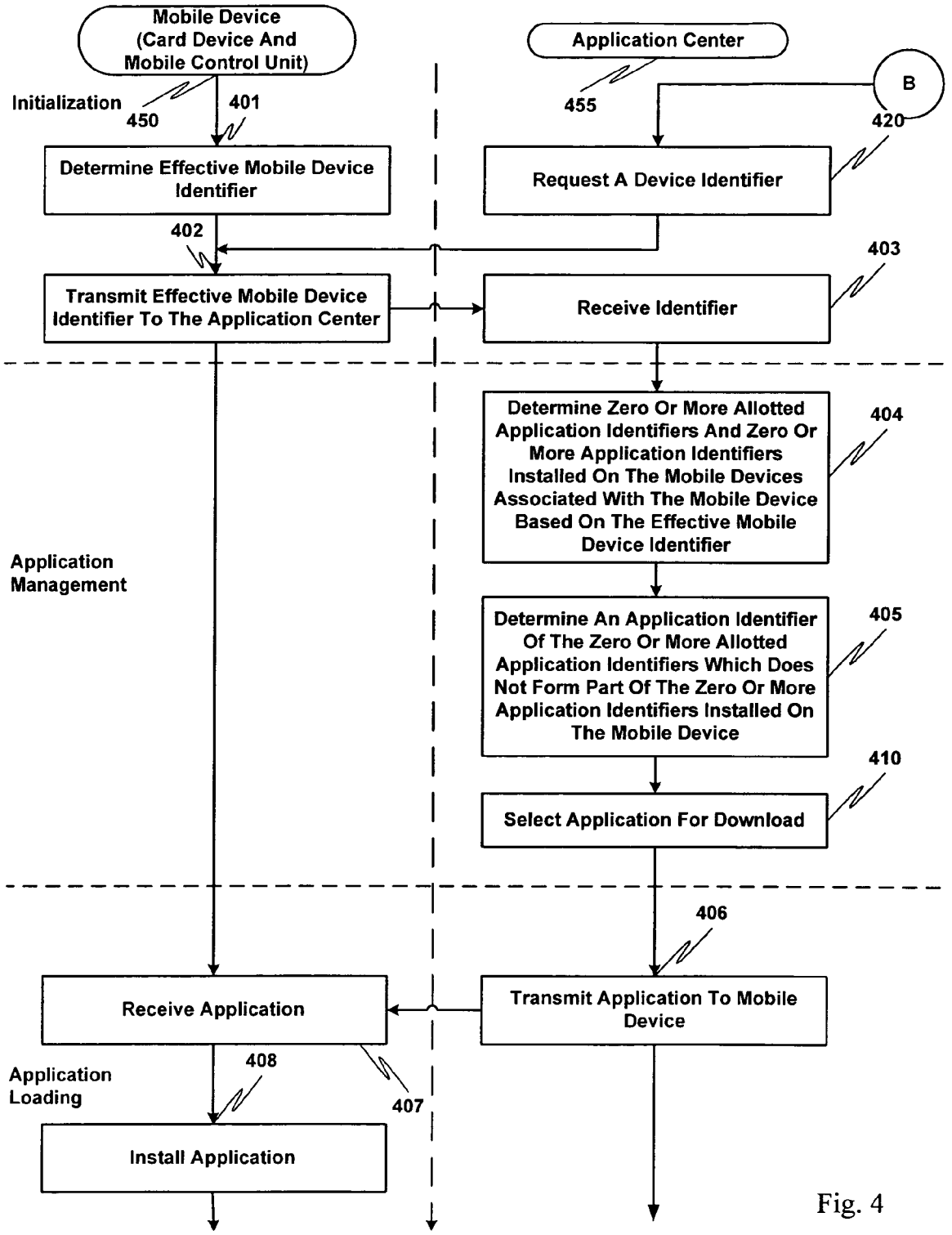
Mobile Device (Card Device And Mobile Control Unit)
Application Center
Initialization
450
401
455
B
420
Determine Effective Mobile Device Identifier
Request A Device Identifier
402
403
Transmit Effective Mobile Device Identifier To The Application Center
Receive Identifier
Determine Zero Or More Allotted Application Identifiers And Zero Or More Application Identifiers Installed On The Mobile Devices Associated With The Mobile Device Based On The Effective Mobile Device Identifier
404
Application Management
Determine An Application Identifier Of The Zero Or More Allotted Application Identifiers Which Does Not Form Part Of The Zero Or More Application Identifiers Installed On The Mobile Device
405
410
Select Application For Download
406
Receive Application
Transmit Application To Mobile Device
Application Loading
408
407
Install Application

Fig. 4

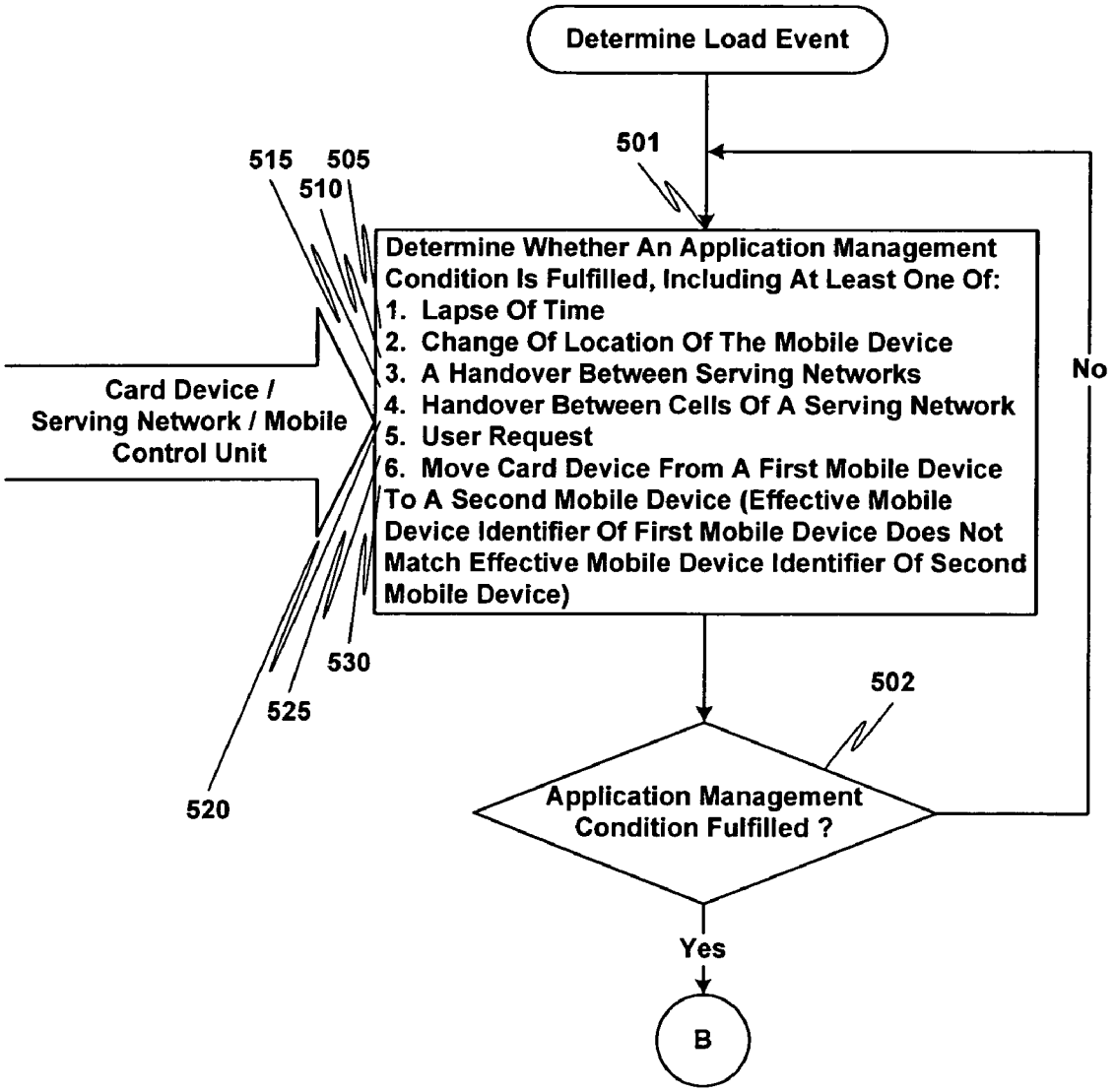
Determine Load Event
501
515
505
510
Determine Whether An Application Management Condition Is Fulfilled, Including At Least One Of:
1. Lapse Of Time
2. Change Of Location Of The Mobile Device
3. A Handover Between Serving Networks
4. Handover Between Cells Of A Serving Network
5. User Request
6. Move Card Device From A First Mobile Device To A Second Mobile Device (Effective Mobile Device Identifier Of First Mobile Device Does Not Match Effective Mobile Device Identifier Of Second Mobile Device)
No
Card Device / Serving Network / Mobile Control Unit
530
525
520
502
Application Management Condition Fulfilled ?
Yes
B

Fig. 5

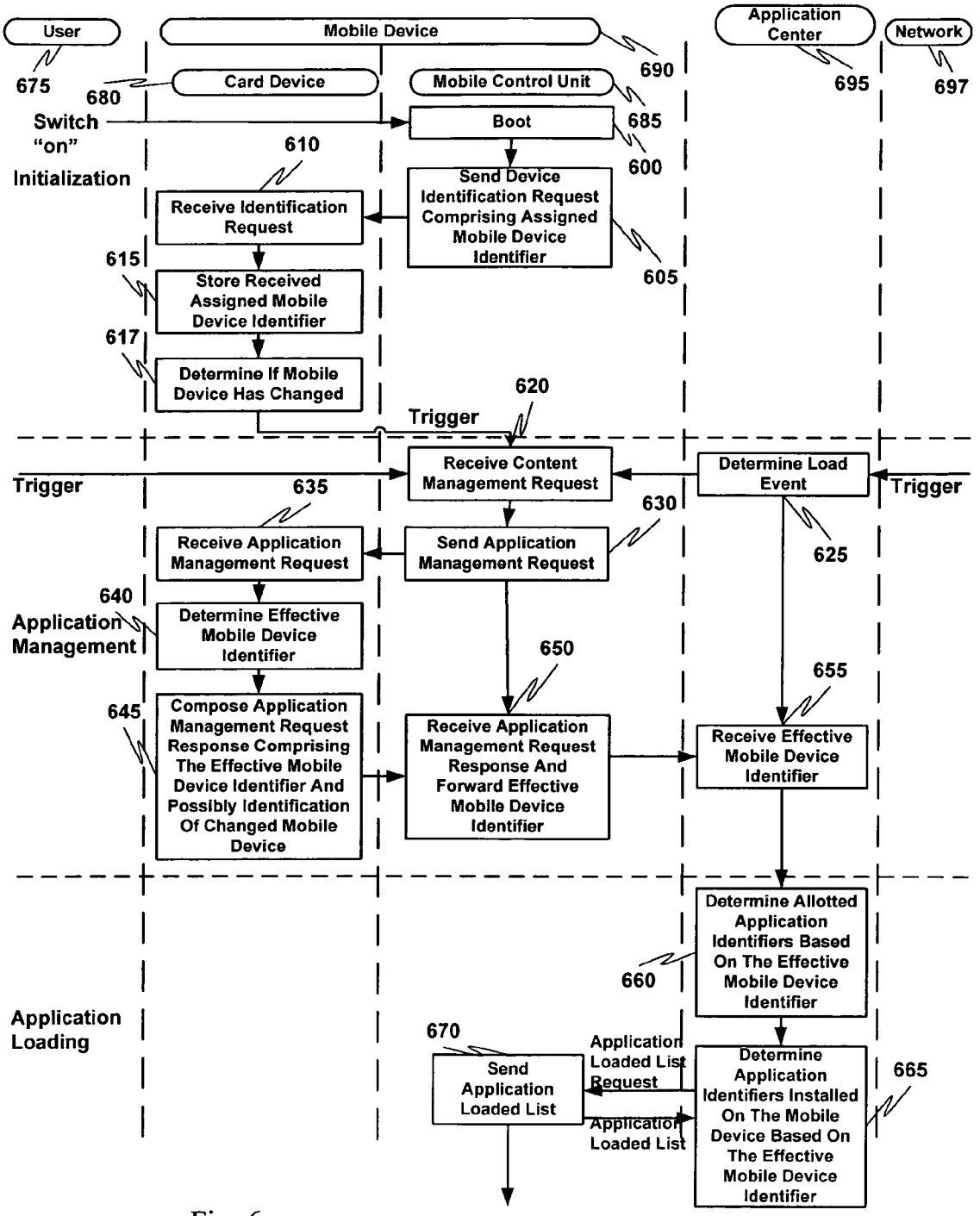
User
Mobile Device
Application Center
Network
675
680
690
695
697
Card Device
Mobile Control Unit
Switch "on"
Boot
685
600
Initialization
610
Receive Identification Request
Send Device Identification Request Comprising Assigned Mobile Device Identifier
605
615
Store Received Assigned Mobile Device Identifier
617
Determine If Mobile Device Has Changed
620
Trigger
Trigger
Receive Content Management Request
Determine Load Event
Trigger
635
630
Receive Application Management Request
Send Application Management Request
625
640
Application Management
Determine Effective Mobile Device Identifier
650
655
645
Compose Application Management Request Response Comprising The Effective Mobile Device Identifier And Possibly Identification Of Changed Mobile Device
Receive Application Management Request Response And Forward Effective Mobile Device Identifier
Receive Effective Mobile Device Identifier
Determine Allotted Application Identifiers Based On The Effective Mobile Device Identifier
660
Application Loading
670
Send Application Loaded List
Application Loaded List Request
Application Loaded List
Determine Application Identifiers Installed On The Mobile Device Based On The Effective Mobile Device Identifier
665

Fig. 6

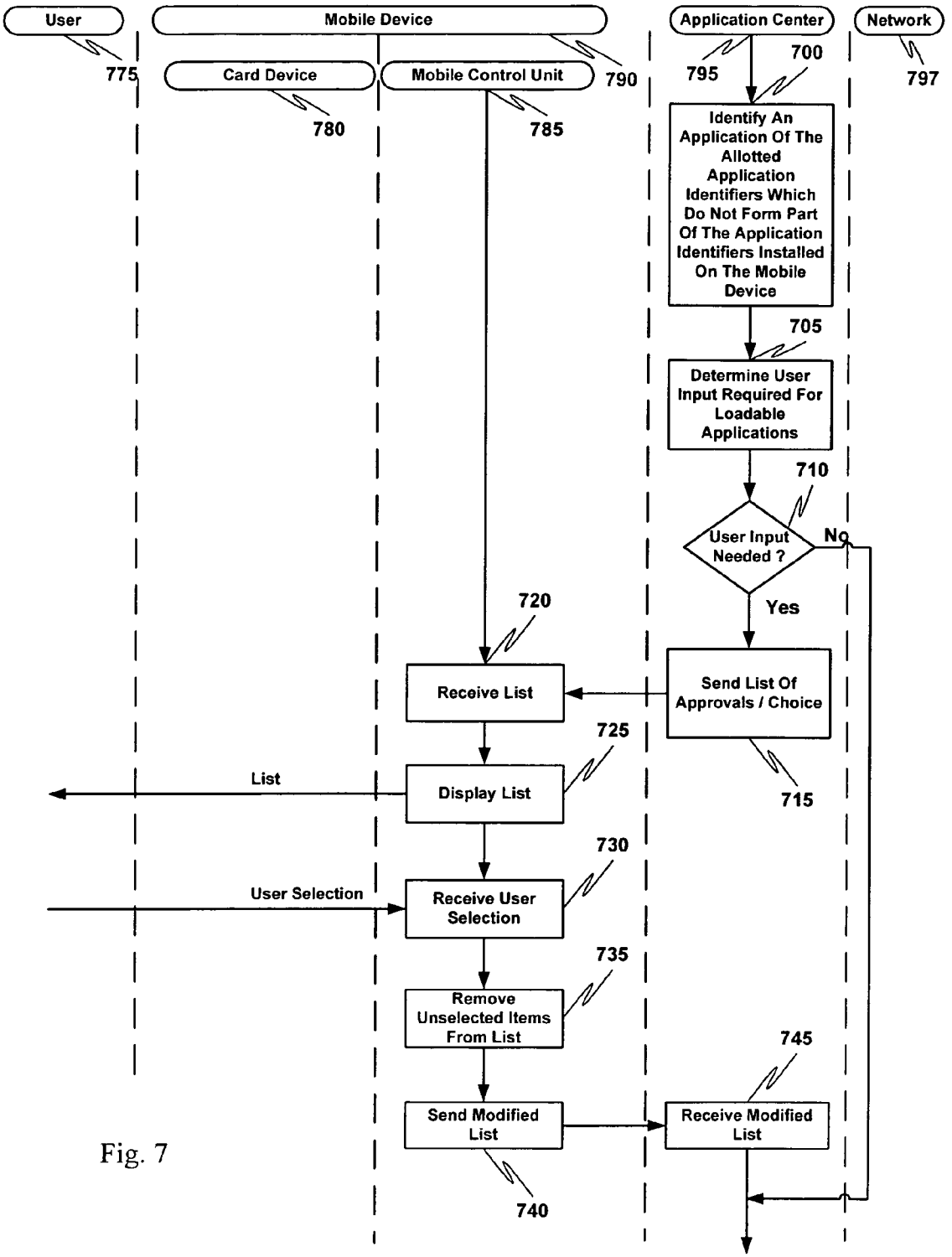
User
Mobile Device
Application Center
Network
775
Card Device
Mobile Control Unit
790
795
700
797
780
785
Identify An Application Of The Allotted Application Identifiers Which Do Not Form Part Of The Application Identifiers Installed On The Mobile Device
705
Determine User Input Required For Loadable Applications
710
User Input Needed ?
No
Yes
720
Receive List
Send List Of Approvals / Choice
725
List
Display List
715
730
User Selection
Receive User Selection
735
Remove Unselected Items From List
745
Send Modified List
Receive Modified List
740

Fig. 7

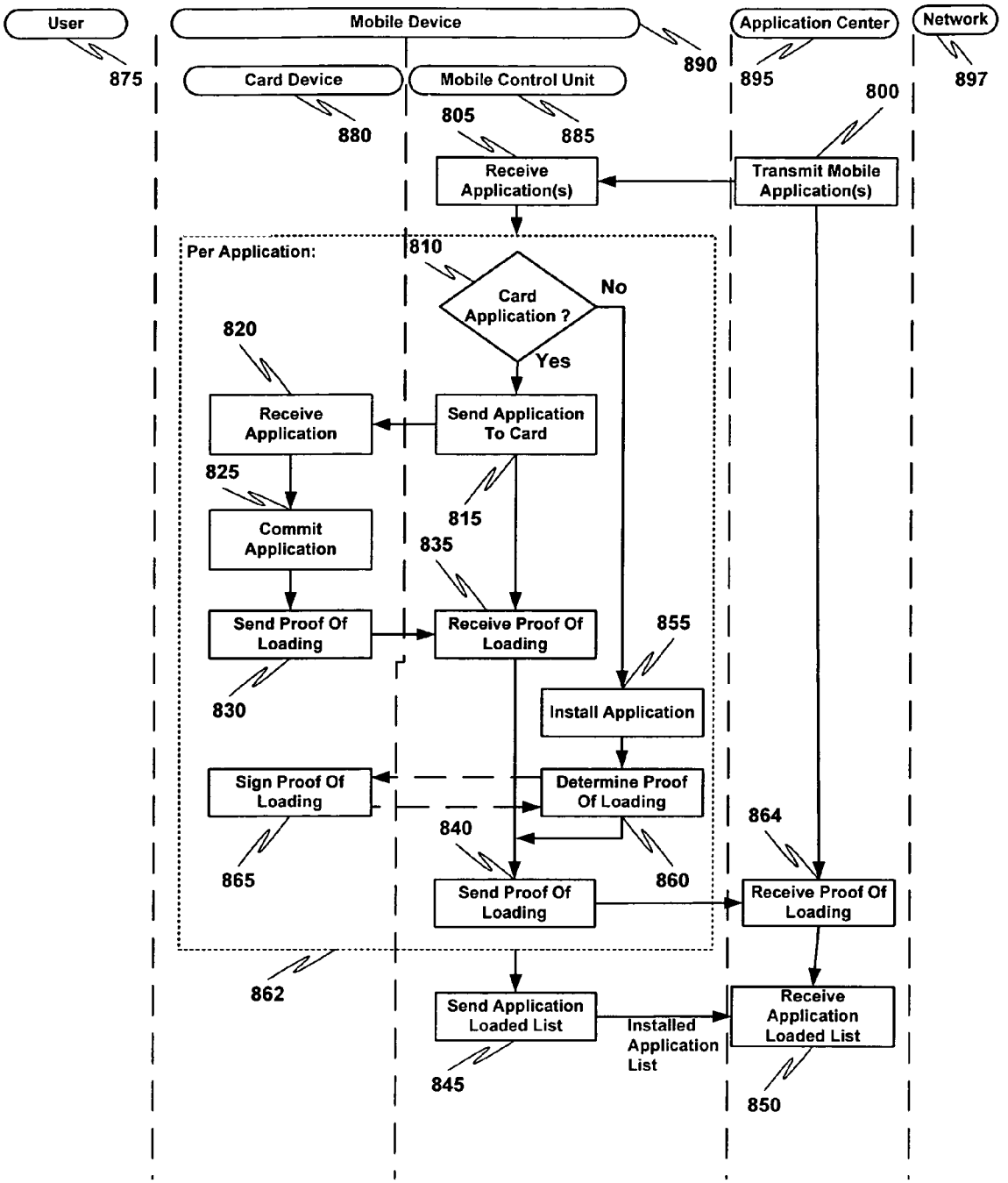
User
Mobile Device
Application Center
Network
875
890
895
897
Card Device
Mobile Control Unit
880
885
800
805
Receive Application(s)
Transmit Mobile Application(s)
Per Application:
810
Card Application ?
No
Yes
820
Receive Application
Send Application To Card
825
815
Commit Application
835
Send Proof Of Loading
Receive Proof Of Loading
855
830
Install Application
Sign Proof Of Loading
Determine Proof Of Loading
840
864
865
860
Send Proof Of Loading
Receive Proof Of Loading
862
Send Application Loaded List
Installed Application List
Receive Application Loaded List
845
850

Fig. 8

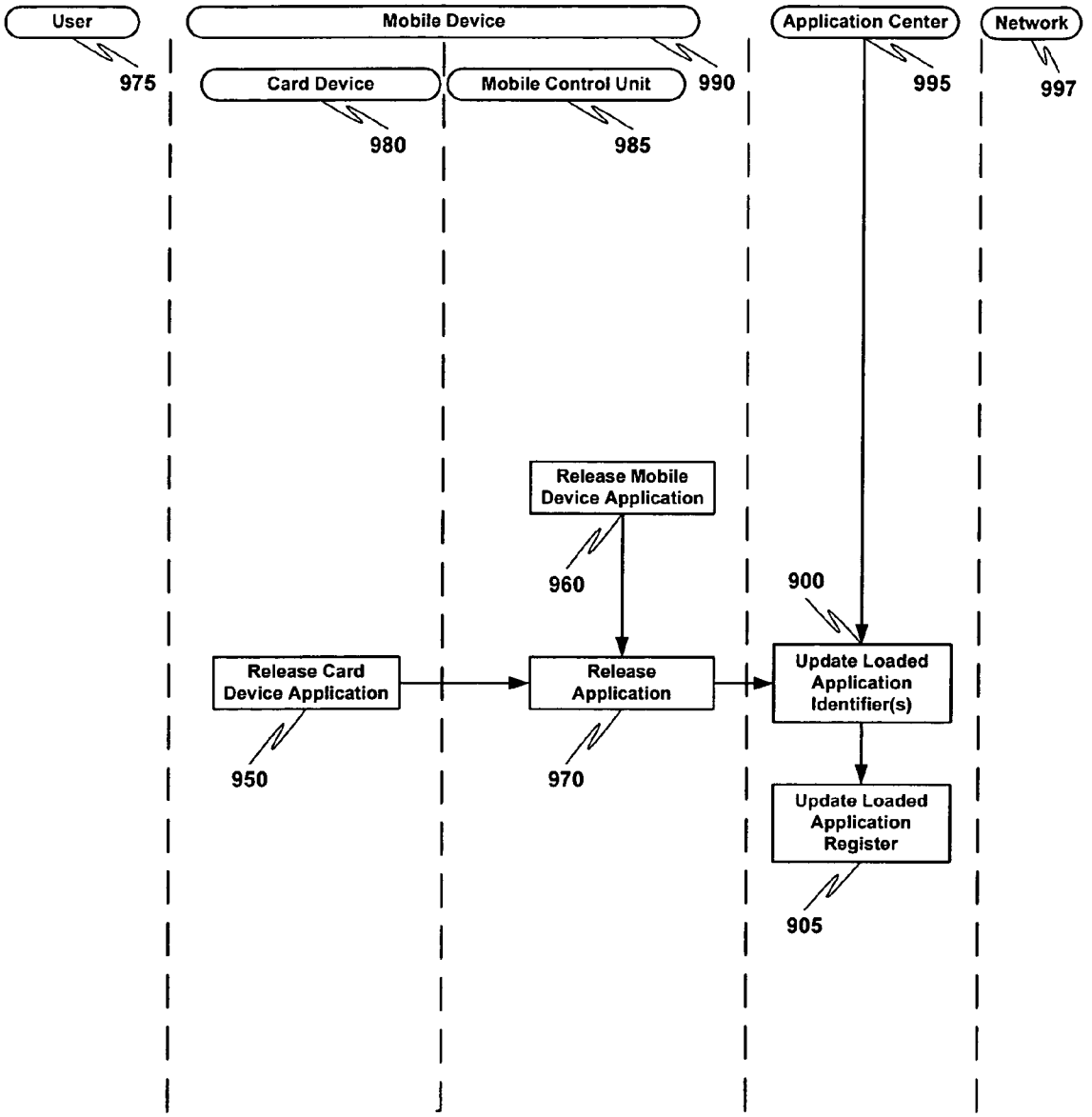
User
Mobile Device
Application Center
Network
975
Card Device
Mobile Control Unit
990
995
997
980
985
Release Mobile Device Application
960
900
Release Card Device Application
Release Application
Update Loaded Application Identifier(s)
950
970
Update Loaded Application Register
905

Fig. 9

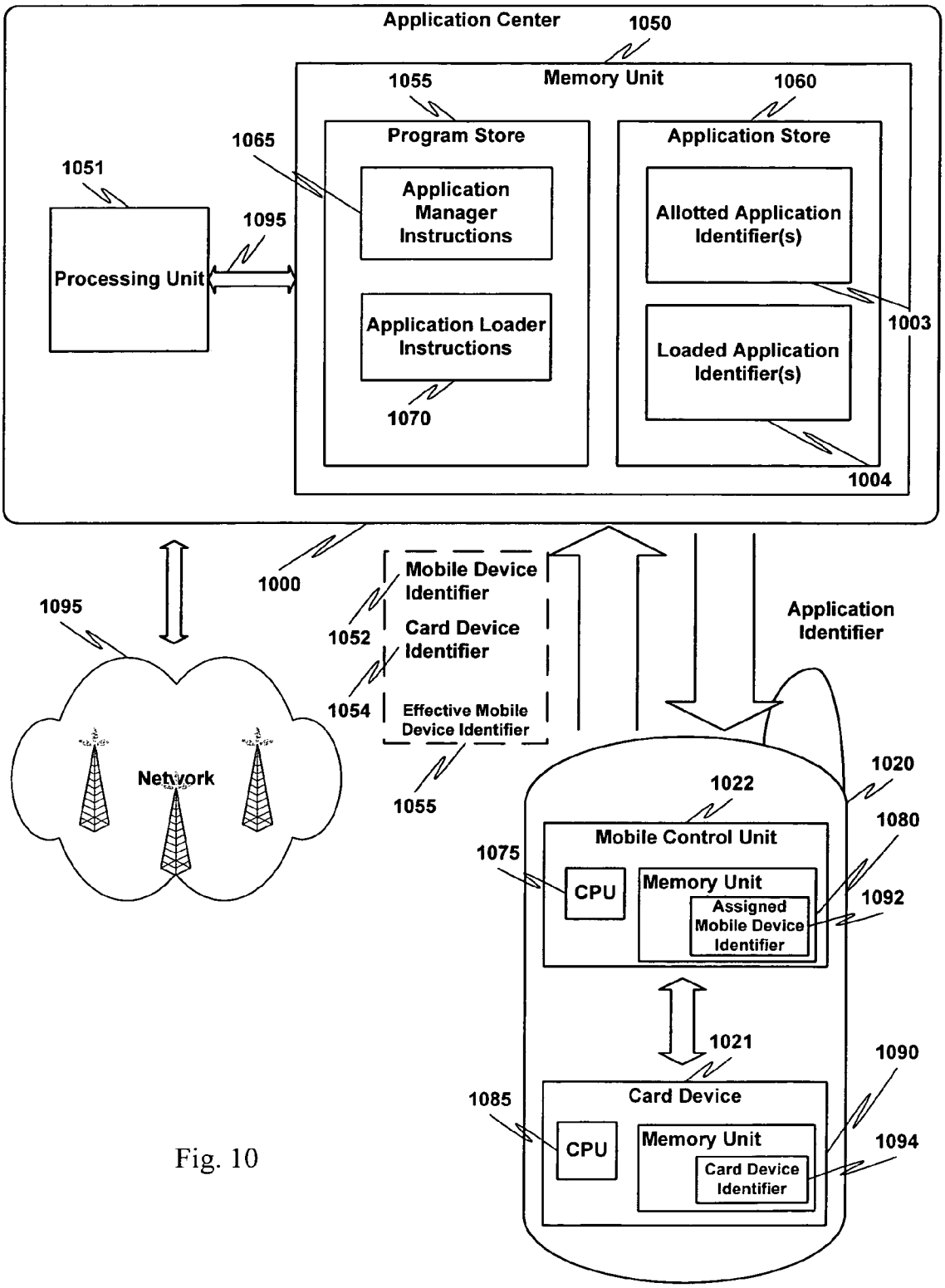
Application Center
1050
Memory Unit
1055
1060
Program Store
Application Store
1065
1051
Application Manager Instructions
Allotted Application Identifier(s)
1095
Processing Unit
Application Loader Instructions
1003
Loaded Application Identifier(s)
1070
1004
1000
Mobile Device Identifier
1095
1052
Card Device Identifier
Application Identifier
1054
Effective Mobile Device Identifier
Network
1055
1020
1022
1080
Mobile Control Unit
1075
CPU
Memory Unit
1092
Assigned Mobile Device Identifier
1021
1090
1085
Card Device
CPU
Memory Unit
1094
Card Device Identifier

Fig. 10

CARD DEVICE FOR LOADING APPLICATIONS TO A MOBILE DEVICE

FIELD OF THE INVENTION

The present invention relates to the field of computer science, and more particularly to a card device for loading applications to a mobile device.

BACKGROUND OF THE INVENTION

Wireless communication networks are becoming increasingly popular and are widely used for communications in private and business environments. Wireless networks allow a wireless transmission of information between users, e.g. during a telephone conversation between telephone terminals or a data communication between computing devices. Wireless networks generally operate according to a wireless communication standard, examples being the GSM (Global System for Mobile Communications) standard, the UMTS (Universal Mobile Telecommunications System) standard, also known as wide band CDMA (WCDMA), the CDMA2000 (Code Division Multiple Access 2000) standard, wireless local area network (WLAN) standards and others.

Mobile communications networks are one type of wireless communication network that generally allows a user of a mobile device to at least roam within the coverage area of the serving network, and communications may be handed over between individual cells of the mobile network. Furthermore, fixed wireless networks are another type of wireless communication network, which generally only allows a movement of a wireless device within a smaller defined area, such as an office or home.

A mobile telephone is one type of wireless communication device, widely used in voice communications, data communications, or both. Similarly, a mobile computer is a type of wireless communication device which is able to connect to wireless communication networks for data transmission, for assisting in voice communications with other communications or computing devices, or both.

Mobile devices such as mobile telephones or mobile computing devices may include a card device for enabling access to a wireless network or a plurality of different wireless networks. The card device can be a type of plastic card embedded with a computer chip for storing data and for carrying out processing operations to enable the mobile device to access the network or networks. The card device may store information pertaining to a particular user or subscriber of a network, allowing a network operator to identify the user for properly directing calls to the user, for providing features of subscribed services, for billing purposes and other purposes. The card device may be insertable into the mobile device, into a dedicated slot or receiving compartment.

Newer mobile devices typically have substantial computing power and are thus becoming increasingly versatile. In addition to offering simple communication services, e.g. voice communication services, newer mobile devices may also offer data services for virtually any type of application, such as information services, maintenance of personal information, purchasing transactions, banking services, and other services.

Accordingly, the mobile devices will be required to hold a number of different mobile application programs, for operating the mobile device and for enabling service provision.

The application programs may be installed on a mobile control unit of the mobile device, or may be installed on the card device. An application may be installed on the mobile

device when the mobile device is put into service, e.g. during manufacture of the mobile device, when entering a service contract with a user, or similar. Furthermore, applications may be installed on a card device upon putting a card device into service, including making a service contract with a user, upon manufacturing the card device, or similar. Thus, the mobile device and the card device will be equipped with a certain initial set of applications available for a user.

However, if at a later point in time during regular operation of the mobile device requirements change, or if new services are subscribed to, an operator of the wireless network may want to install, remove or update applications available on the mobile control unit, the card device, or both.

It is conceivable to load applications onto the mobile control unit, the card device, or both, in a specific service mode entered by a user, where the wireless link between the network and the mobile device is used for downloading applications. However, this may require substantial user interaction in selecting applications, and controlling the downloading of applications, which may lead to errors. Furthermore, as the network may not have full knowledge about applications or versions of applications available on the mobile device, applications may be loaded repeatedly or not at all.

SUMMARY OF THE INVENTION

A system for loading application identifiers to a mobile device includes a mobile device, a card device insertable into the mobile device, and an application center. The card device is adapted to determine an effective mobile device identifier of the mobile device, and transmit the effective mobile device identifier to the application center. The effective mobile device identifier is based at least in part on the result of a process performed by the card device. The application center is adapted to (1) determine zero or more application identifiers of applications loaded on the mobile device and zero or more allotted application identifiers based at least in part on the effective mobile device identifier, (2) identify at least one application identifier of the zero or more allotted application identifiers which does not form part of the zero or more application identifiers of applications loaded on the mobile device, and (3) load the at least one application identifier to the mobile device.

BRIEF DESCRIPTION OF THE DRAWINGS

The accompanying drawings, which are incorporated into and constitute a part of this specification, illustrate one or more embodiments of the present invention and, together with the detailed description, serve to explain the principles and implementations of the invention.

FIG. **1** is a block diagram that illustrates a communication environment for loading an application identifier to a mobile device in accordance with one embodiment of the present invention.

FIG. **2** is a high level flow diagram that illustrates a method for loading one or more application identifiers to a mobile device from a system perspective in accordance with one embodiment of the present invention.

FIG. **3** is a low level flow diagram that illustrates a method for loading one or more application identifiers to a mobile device from a system perspective in accordance with one embodiment of the present invention.

FIG. **4** is a flow diagram that illustrates initialization, application management, and application loading methods from the perspectives of a mobile device and an application center in accordance with embodiments of the present invention.

FIG. **5** is a flow diagram that illustrates a method for determining a load event in accordance with one embodiment of the present invention.

FIG. **6** is a flow diagram that illustrates initialization, application management, and application loading methods from the perspectives of a user, a card device of a mobile device, a mobile control unit of the mobile device, an application center, and a network in accordance with embodiments of the present invention.

FIG. **7** is a flow diagram that illustrates application identifier loading methods from the perspectives of a user, a card device of a mobile device, a mobile control unit of the mobile device, an application center, and a network, with particular emphasis on user input regarding loadable applications in accordance with embodiments of the present invention. FIG. **7** is a continuation of FIG. **6**.

FIG. **8** is a flow diagram that illustrates application identifier loading methods from the perspectives of a user, a card device of a mobile device, a mobile control unit of the mobile device, an application center, and a network, with particular emphasis on providing a proof of loading in accordance with embodiments of the present invention. FIG. **8** is a continuation of FIG. **7**.

FIG. **9** is a flow diagram that illustrates application identifier releasing methods from the perspectives of a user, a card device of a mobile device, a mobile control unit of the mobile device, an application center, and a network, with particular emphasis on performing administrative updates in accordance with embodiments of the present invention. FIG. **9** is a continuation of FIG. **8**.

FIG. **10** is a block diagram that illustrates a communication environment in accordance with one embodiment of the present invention, particularly illustrating elements of an application center and a mobile device.

DETAILED DESCRIPTION

Embodiments of the present invention are described herein in the context of a system for loading applications to a mobile device. Those of ordinary skill in the art will realize that the following detailed description of the present invention is illustrative only and is not intended to be in any way limiting. Other embodiments of the present invention will readily suggest themselves to such skilled persons having the benefit of this disclosure. Reference will now be made in detail to implementations of the present invention as illustrated in the accompanying drawings. The same reference indicators will be used throughout the drawings and the following detailed description to refer to the same or like parts.

In the interest of clarity, not all of the routine features of the implementations described herein are shown and described. It will, of course, be appreciated that in the development of any such actual implementation, numerous implementation-specific decisions must be made in order to achieve the developer's specific goals, such as compliance with application- and business-related constraints, and that these specific goals will vary from one implementation to another and from one developer to another. Moreover, it will be appreciated that such a development effort might be complex and time-consuming, but would nevertheless be a routine undertaking of engineering for those of ordinary skill in the art having the benefit of this disclosure.

In accordance with one embodiment of the present invention, the components, process steps, and/or data structures may be implemented using various types of operating systems (OS), computing platforms, firmware, computer programs, computer languages, and/or general-purpose machines. The method can be run as a programmed process running on processing circuitry. The processing circuitry can take the form of numerous combinations of processors and operating systems, or a stand-alone device. The process can be implemented as instructions executed by such hardware, hardware alone, or any combination thereof. The software may be stored on a program storage device readable by a machine.

In addition, those of ordinary skill in the art will recognize that devices of a less general purpose nature, such as hardwired devices, field programmable logic devices (FPLDs), including field programmable gate arrays (FPGAs) and complex programmable logic devices (CPLDs), application specific integrated circuits (ASICs), or the like, may also be used without departing from the scope and spirit of the inventive concepts disclosed herein.

In accordance with one embodiment of the present invention, the method may be implemented on a data processing computer such as a personal computer, workstation computer, mainframe computer, or high performance server running an OS such as Solaris® available from Sun Microsystems, Inc. of Santa Clara, Calif., Microsoft® Windows® XP and Windows® 2000, available from Microsoft Corporation of Redmond, Wash., or various versions of the Unix operating system such as Linux available from a number of vendors. The method may also be implemented on a mobile device running an OS such as Windows® CE, available from Microsoft Corporation of Redmond, Wash., Symbian OS®, available from Symbian Ltd of London, UK, Palm OS®, available from PalmSource, Inc. of Sunnyvale, Calif., and various embedded Linux operating systems. Embedded Linux operating systems are available from vendors including MontaVista Software, Inc. of Sunnyvale, Calif., and FSMLabs, Inc. of Socorro, N. Mex. The method may also be implemented on a multiple-processor system, or in a computing environment including various peripherals such as input devices, output devices, displays, pointing devices, memories, storage devices, media interfaces for transferring data to and from the processor(s), and the like. In addition, such a computer system or computing environment may be networked locally, or over the Internet.

In the context of this description, the term "network" includes local area networks, wide area networks, the Internet, cable television systems, telephone systems, wireless telecommunications systems, fiber optic networks, ATM networks, frame relay networks, satellite communications systems, and the like. Such networks are well known in the art and consequently are not further described here.

In the context of this description, the term "randomized" describes the result of a random or pseudo-random number generation process. A "randomized process" describes the application of such a result to a process. Methods of generating random and pseudo-random numbers are known by those skilled in the relevant art.

In the context of this description, the term "identifier" describes one or more numbers, characters, symbols, or the like. More generally, an "identifier" describes any entity that can be represented by one or more bits.

In the context of this description, the term "application identifier" describes different applications with different functionality, different versions of the same application, or both. Thus, for example a version V1.1 of a particular service application can be considered to constitute a first application, while a version V1.2 of the same service application can be considered to constitute a second application.

In the context of this description, an application identifier is "allotted" to a device such as a mobile device or a card device

if the executable application code that implements the application is enabled for use on that particular type of device (i.e. the application code is capable of running on the type of mobile device), and if the application code is allowed for use on the particular device (i.e. the device user has paid for use of a service enabled by the application).

In the context of this description, the term "loading an application identifier" describes any operation or sequence of operations for installing or making available an application on a device, i.e. on the mobile control unit, the card device, or both. This includes compiling, downloading or storing coded instructions of an application on the card device or mobile control unit, such that, upon execution, the functionality of the application can be realized and utilized. Furthermore, the expression "loading application identifiers" as used in this description may refer to the operation of transferring one or more application identifiers, e.g. from an application center towards the mobile device, i.e. loading does not necessarily also include installing the application at the mobile device.

In the context of this description, the term "releasing an application identifier" describes any operation or sequence of operations for uninstalling or making unavailable an application on a device, i.e. on the mobile control unit, the card device, or both. Releasing an application identifier may include releasing files associated with an application, such as image files. An application identifier may be released to increase availability of memory space or if application identifiers are no longer required for other reasons, such as if a certain service is un-subscribed, if a service provision is terminated at the mobile device, or for other reasons.

In the context of this description, the term "mobile device application identifier" describes an application identifier associated with an application for loading on a mobile device.

In the context of this description, the term "card device application identifier" describes an application identifier associated with an application for loading on a card device.

In the context of this description, an assigned mobile device identifier describes an identifier assigned to a mobile device prior to being issued to a mobile device user.

In the context of this description, an assigned card device identifier describes an identifier assigned to a card device prior to being issued to a card device user or being configured with a mobile device.

Turning now to FIG. **1**, a block diagram that illustrates a communication environment for loading application identifiers to a mobile device in accordance with one embodiment of the present invention is presented. The embodiment enables convenient downloading of application identifiers from an application center **100** to a mobile device **120** by maintaining information regarding application identifiers allotted to mobile device **120**. Application center **100** may also maintain information regarding identifiers of applications loaded on mobile device **120**. Application center **100** may also maintain a relationship between one or more assigned mobile device identifiers and one or more card device identifiers, where an assigned card device identifier uniquely identifies a card device and an assigned mobile device identifier uniquely identifies a mobile device. Based at least in part on a comparison of the application identifiers already loaded on mobile device **120** and application identifiers allotted for mobile device **120**, application center **100** determines additional application identifiers to be downloaded to the mobile device **120**. Thus, application center **100** ensures a desired set of application identifiers on mobile device **120**, without requiring extensive user interaction and by reducing communication overhead.

Still referring to FIG. **1**, application center **100** is shown to include an application manager **101**, an application loader **102**, zero or more allotted application identifiers **103**, and zero or more application identifiers **104** of applications loaded on mobile device **120**. Furthermore, FIG. **1** illustrates mobile device **120** including a card device **121** and a mobile control unit **122**. Card device **121** may be removably attached to mobile device **120**.

In operation, application manager **101** of application center **100** determines zero or more allotted application identifiers **103**, and zero or more application identifiers **104** of applications loaded on mobile device **120**, based at least in part on an effective mobile device identifier **155** of mobile device **120**. Application manager **101** also identifies at least one application identifier of the zero or more allotted application identifiers **103**, which does not form part of the zero or more application identifiers **104** of applications loaded on the mobile device **120**. Effective mobile device identifier **155** is based at least in part on the result of a process performed by card device **121**. Application loader **102** of the application center **100** then loads the at least one application identifier to mobile device **120**.

According to one embodiment of the present invention, application center **100** maintains a comprehensive overview of application identifiers allotted to and loaded to mobile device **120**, or a plurality of mobile devices. Application center **100** loads only application identifiers, including different versions thereof, to mobile device **120**, which are not already available at mobile device **120**.

To enable application center **100** to determine the zero or more allotted application identifiers **103**, and the zero or more application identifiers **104** of applications loaded on mobile device **120**, an assigned mobile device identifier **130** is transmitted by mobile device **120** to application center **100** as illustrated with reference numeral **152** in FIG. **1**. More precisely, card device **121** of mobile device **120** includes an application request unit **126** that responds to an application management request and an identification unit **125** that responds to a device identification request **124**. Device identification request **124** is made by mobile control unit **122** to transfer assigned mobile device identifier **130** to card device **121**, and application management request **123** is made by mobile control unit **122** to transfer effective mobile device identifier **155** including the assigned mobile device identifier **152** from card device **120** to application center **100**. Upon receipt of effective mobile device identifier **155**, application center **100**: (i) determines the zero or more allotted application identifiers **103**, and the zero or more application identifiers **104** of applications loaded on mobile device **120** based at least in part on the received effective mobile device identifier **155**; (ii) identifies at least one application identifier of the zero or more allotted application identifiers **103** that does not form part of the zero or more application identifiers **104** of applications loaded on mobile device **120**; and (iii) transmits the at least one application identifier to mobile device **120**, as illustrated with reference numeral **151** in FIG. **1**.

According to another embodiment of the present invention, mobile control unit **122** is operationally adapted to provide a conduit such that application center **100** to determine the zero or more allotted application identifiers **103**, and the zero or more application identifiers **104** of applications loaded on mobile device **120** issues an application management request to card device **121** via mobile control processing unit **122**, essentially without further processing by that processing unit. Mobile control unit **122** is adapted to issue a device identification request **124** at a time prior to application center **100** issuing application management request **123**. Specifically,

mobile control unit **122** issues device identification request **124** to card device **121** at boot time or whenever mobile control unit **122** is operationally re-initialized (reset). Application center **100** after issuing application management request **123**; (i) receives, in response, the effective mobile device identifier **155** including the assigned mobile device identifier **152**; (ii) determines the zero or more allotted application identifiers **103**, and the zero or more application identifiers **104** of applications loaded on mobile device **120** based at least in part on received effective mobile device identifier **155**; (iii) identifies at least one application identifier of the zero or more allotted application identifiers **103** that does not form part of the zero or more application identifiers **104** of applications loaded on mobile device **120**; and (iv) transmits the at least one application identifier to mobile device **120**, as illustrated by reference numeral **151** of FIG. **1**.

According to another embodiment of the present invention, card device **121** is adapted to request the assigned mobile device identifier from mobile device and send the effective mobile device identifier including the assigned mobile device identifier to the application management center. Upon receipt of the effective mobile device identifier **155**, application center **100**: (i) determines the zero or more allotted application identifiers **103**, and the zero or more application identifiers **104** of applications loaded on mobile device **120** based at least in part on the received effective mobile device identifier **155**; (ii) identifies at least one application identifier of the zero or more allotted application identifiers **103** that does not form part of the zero or more application identifiers **104** of applications loaded on mobile device **120**; and (iii) transmits the at least one application identifier to mobile device **120**, as illustrated with reference numeral **151** in FIG. **1**.

According to one embodiment of the present invention, card device **121** includes an assigned card device identifier **135**. Assigned card device identifier **135** may be persistently stored in card device **121** memory and assigned to card device **121** when the card device **121** is initialized, e.g. at card device **121** issuance. Specifically, the assigned card device identifier is assigned to card device **121** when application request unit **126** is initialized, and this card device identifier **135** may be different from similarly functional data elements additionally stored in card device **121** as may be associated with other functional units that may also be present in the card device **121** (data elements and functional units not shown in FIG. **1**). Furthermore, application request unit **126** is adapted to respond to application management request **123** with an effective mobile device identifier **155** that is based at least in part on the result of a process performed by card device **121**. Application center **100**, after receiving the effective mobile device identifier **155**: (i) determines the zero or more allotted application identifiers **103**, and the zero or more application identifiers **104** of applications loaded on mobile device **120** based at least in part on the effective mobile device identifier **155**; (ii) identifies at least one application identifier of the zero or more allotted application identifiers **103** that does not form part of the zero or more application identifiers **104** of applications loaded on mobile device; and (iii) transmits the at least one application identifier to mobile device **120**, as illustrated with reference numeral **151** in FIG. **1**. In a further embodiment, application request unit **126** is operationally adapted to persistently store a mobile device identifier **162** as may be received in a device identification request **124**, and include in the response to an application management request **123** an indication that a recently received mobile device identifier **160** differs from a previously stored one **162**.

According to one embodiment of the present invention, the effective mobile device identifier is based on the result of a process or protocol initiated by card device **121**. According to one embodiment of the present invention, effective mobile device identifier **155** includes assigned mobile device identifier **152**. According to another embodiment, card device **121** establishes a mapping between assigned mobile device identifier **130** and effective mobile device identifier **155**. According to another embodiment of the present invention, effective mobile device identifier **155** is based at least in part on assigned mobile device identifier **130**, assigned card device identifier **135**, or both. By way of example, effective mobile device identifier **155** may include one or more cryptograms based at least in part on the result of applying a cryptographic process to one or more of assigned mobile device identifier **130** and assigned card device identifier **135**. The one or more cryptograms may be computed using symmetric or asymmetric keys. As a further example, effective mobile device identifier **155** may be based at least in part on the hash value of one or more of assigned mobile device identifier **130** and assigned card device identifier **135**. According to another embodiment of the present invention, effective mobile device identifier **155** is transmitted over a secure transmission path as may have been established by a transmission path protection unit present in card device **121** and in application management center **100** (units not shown in FIG. **1**).

Receipt by the application center **100** of effective mobile device identifier **155**, whether effective mobile device identifier **155** includes an assigned mobile device identifier **152** or both an assigned mobile device identifier **152** and an assigned card device identifier **154** triggers: (i) a determination of the zero or more allotted application identifiers **103**, and the zero or more application identifiers **104** of applications loaded on mobile device **120** at the application center **100**; (ii) the identification of the at least one application identifier of the zero or more allotted application identifiers **103**, which does not form part of the zero or more application identifiers **104** of applications loaded on mobile device **120**; and (iii) a transmission of this at least one application identifier to mobile device **120**.

According to another embodiment of the present invention, application request unit **126** generates and transmits a specific request to the application center **100**, requesting the above operations of determining the at least one application identifier and transmission of the at least one application identifier to mobile device **120**. If card device **121** is responsible for establishing a mapping between an assigned mobile device identifier **130** and an effective mobile device identifier **155**, application request unit **126** may include in this request an indication that a persistently stored mobile device identifier **162** differs from a recently received mobile device identifier **160**. If the mapping between assigned mobile device identifier **130** and an effective mobile device identifier **155** is done in application center **100**, such as when effective mobile device identifier **155** is based at least in part on assigned mobile device identifier **130**, application request unit **126** need not include in the request an indication that a persistently stored mobile device identifier **162** differs from a recently received mobile device identifier **160**, since application center **100** makes the determination on its own. Receipt by application center **100** of an indication that mobile device identifier **162** persistently stored by application request unit **126** differs from a recently received mobile device identifier **155** may trigger one or more application management actions, including the erasure of all application identifiers presently loaded in mobile device **120** and loading the zero or more allotted application identifiers **103** associated with mobile device **120**.

According to one embodiment of the present invention, the at least one application identifier determined at the application center **100** is transmitted to mobile device **120** as a

sequence of coded instructions for installation or execution at mobile device **120**, i.e., an application program can be transmitted from the application center **100**. Alternatively, application identifier **151** transmitted from application center **100** to mobile device **120** may be constituted by an identifier of the application to be loaded at mobile device **120**, and mobile device **120** may use the identifier to obtain the corresponding coded instructions from another source. For example, mobile device **120** obtains the application code from a memory available at mobile device **120**, storing one or more applications in compressed form, or may obtain the application code from an external device, e.g. arranged somewhere in a communication network **150**.

As shown in FIG. **1**, application manager **101** receives effective mobile device identifier **155** for use in determining the zero or more allotted application identifiers **103**. Effective mobile device identifier **155** may include an assigned mobile device identifier **152**. Effective mobile device identifier **155** may also include information indicating the type of mobile device **120**, the features of mobile device **120**, the capabilities of mobile device **120**, or a combination thereof. Alternatively, application center **100** may include a mapping between one or more effective mobile device identifiers and information indicating the type of mobile device **120**, the features of mobile device **120**, the capabilities of mobile device **120**, or a combination thereof. This information may be established once upon a card device detecting a new mobile device. Accordingly, application center **100** may specifically tailor the zero or more allotted application identifiers **103** based at least in part on the features or capabilities of mobile device **120**.

Likewise, if application manager **101** also receives assigned card device identifier **154** from card device **121**, e.g. as part of effective mobile device identifier **155**, application manager **101** may identify a type of card device **121** based at least in part on assigned card device identifier **154**, and determine at least part of the zero or more allotted application identifiers **103** based at least in part on the type of card device **121**. Accordingly, the zero or more allotted application identifiers **103** may also be specifically tailored to the type of card device **121**. By way of example, the zero or more allotted application identifiers **103** may be tailored based at least in part on the features or capabilities of card device **121**.

Accordingly, application center **100** is able to determine application identifiers for loading to mobile control unit **122**, or for loading to card device **121**.

According to one embodiment of the present invention, application manager **101** determines the zero or more allotted application identifiers **103** based at least in part on a location indicator of mobile device **120**. Accordingly, the zero or more allotted application identifiers **103** can include a localized set of application identifiers, e.g. providing location dependent application identifiers or features thereof. Furthermore, application manager **101** may determine the zero or more allotted application identifiers **103** based at least in part on an identifier of a serving network **150**, enabling provision of zero or more allotted application identifiers **103** based at least in part on a type or features of serving network **150**, or based at least in part on an application selection desired by an operator of serving network **150**. Additionally, application manager **101**, according to another embodiment of the present invention, determines the zero or more allotted application identifiers **103** based at least in part on user subscription information. The user subscription information may include a user subscription of services and associated application identifiers, a user subscription to specific features of services, or both. By way of example, application manager **101** may determine the zero or more allotted application identifiers **103** based at least in part on user preference, including user settings of mobile device **120**, user settings pertaining to service selection, and other user preferences.

According to one embodiment of the present invention, application center **100** determines the zero or more application identifiers **104** of applications loaded on mobile device **120** based at least in part on information regarding application identifiers previously loaded on mobile device **120**, e.g. maintained at the application center **100**. Alternatively or addition thereto, application manager **101** can request from mobile device **120** information regarding identifiers of applications loaded on mobile device **120**, card device **121**, or both.

Additionally, according to one embodiment of the present invention, card device **121** transmits information regarding identifiers of applications loaded on mobile device **120** in association with effective mobile device identifier **155**.

Application center **100** may also request information from mobile device **120** regarding identifiers of applications loaded on mobile device **120** upon detecting the absence of one or more application identifiers **104** loaded on mobile device **120** at the application center **100**, a lapse of a predetermined period of time, or both. Accordingly, application center **100** is made aware of the application identifiers presently loaded on mobile device **120**.

As an alternative to card device **121** detecting a new mobile device **120**, the application manager **101** may store corresponding (assigned card device identifier **135**, assigned mobile device identifier **152**) pairs received from mobile device **120**, and the application manager **101** receives a new assigned card device identifier **154** or assigned mobile device identifier **152** in association with a previously stored assigned mobile device identifier **152** or card device identifier **154** of a corresponding pair, mobile device **120** may be requested to provide information regarding identifiers of applications loaded on mobile device **120**. Thus, if a card device **121** is exchanged, or inserted into a new mobile device **120**, zero or more application identifiers of applications loaded on mobile device **120** may automatically be determined.

As noted above, the application identifiers may be provided for installation on card device **121**, for installation on mobile control unit **122** of mobile device **120**, or for both. Therefore, according to one embodiment of the present invention, the zero or more allotted application identifiers **103** includes zero or more allotted mobile application identifiers and zero or more allotted card application identifiers. Similarly, in this case the zero or more identifiers **104** of applications loaded on mobile device **120** includes zero or more mobile applications for loading on mobile control unit **122** of mobile device **120**, and zero or more card applications for loaded on the card device **121**.

In the following, examples of application center **100** and mobile device **120** are described in further detail. The following constitutes examples only and should not be construed as limiting the application.

Application center **100** is responsible for maintaining or obtaining information regarding allotted application identifiers of a mobile device **120**, and zero or more application identifiers of applications loaded on mobile device **120**. Further, application center **100** is responsible for selecting at least one of the application identifiers of the zero or more allotted application identifiers **103** which are not already loaded on mobile device **120**, i.e., which do not form part of the zero or more application identifiers **104** loaded on mobile device **120**.

The application center **100** may manage a plurality of mobile devices, e.g. subscribers of a particular network **150** or subscribers to the application loading service of application center **100**. According to one embodiment of the present

invention, application center **100** is located on a network side of a network **150** serving mobile device **120** or mobile devices and forms an integral part of a serving network **150**, responsible for all mobile devices having subscribed to network **150**, or mobile devices being present in mobile network **150**. According to another embodiment of the present invention, application center **100** is responsible for only part of a communication network **150**. According to another embodiment of the present invention, application center **100** is responsible for a number of different communication networks such as network **150**.

Furthermore, while application center **100** shown in FIG. **1** is formed by a single unit, as shown in FIG. **1**, it is also possible that application center **100** includes distributed elements, for example distributed over a network **150**, e.g. in a backbone of a communication network **150**.

According to one embodiment of the present invention, application center **100** maintains centralized information regarding zero or more allotted application identifiers **103** and zero or more identifiers **104** of applications loaded on the mobile device for each one of a number of mobile devices. According to one embodiment of the present invention, elements of application center **100** are distributed, and there is one master copy of zero or more allotted application identifiers **103** and zero or more application identifiers **104** of applications loaded on mobile device **120**. However, it is possible that in a larger network environment, copies of the master zero or more allotted application identifiers **103** and master zero or more application identifiers **104** of applications loaded on mobile device **120** are taken and distributed over network **150**, with the copies being maintained in closer proximity to an actual location of mobile device **120**. For example, in a GSM system a master copy of the zero or more allotted application identifiers **103** and zero or more application identifiers **104** of applications loaded on mobile device **120** may be stored in a database of the GSM network, whereas copies of the zero or more allotted application identifiers **103** and zero or more application identifiers **104** of applications loaded on mobile device **120** may for example be maintained at a mobile switching center (MSC).

According to one embodiment of the present invention, the zero or more allotted application identifiers **103** shown in FIG. **1** indicates all application identifiers allotted to a particular mobile device **120**, card device **121**, or both. While it is possible that the zero or more allotted application identifiers **103** include program code for each application or, e.g. a source code or a compiled code, it is also possible that the zero or more allotted application identifiers **103** only includes identifiers of the respective application, with the program code pertaining to the application being stored at another location and being referenced through the identifier of the application. Furthermore, the zero or more allotted application identifiers **103** may be stored as one unit for example in a memory of application center **100**, or portions of the zero or more allotted application identifiers **103** may be stored in a distributed fashion in different memories of application center **100**. In one example, the group of application identifiers pertaining to card device **121** are stored at one location, and the group of application identifiers pertaining to mobile device **120**, i.e., mobile control unit **122**, are stored at another location in application center **100**.

According to one embodiment of the present invention, the zero or more application identifiers **104** of applications loaded on mobile device **120**, similar to the zero or more allotted application identifiers **103**, are stored at a central location, or in a distributed fashion, with parts or copies of the zero or more application identifiers **104** of applications loaded on mobile device **120** being stored in closer proximity to mobile device **120** and includes zero or more application identifiers of applications, which are already loaded to mobile device **120**, i.e. card device **121** or mobile control unit **122**.

While it is possible that the zero or more allotted application identifiers **103**, and the zero or more application identifiers **104** of applications loaded on mobile device **120** are physically stored somewhere at application center **100**, according to another embodiment of the present invention, the zero or more allotted application identifiers **103**, the zero or more application identifiers **104** of applications loaded on mobile device **120**, or both, are generated on the fly, e.g. upon detecting a command or request pertaining to loading an application identifier to mobile device **120**.

The applications for mobile device **120**, i.e. for mobile control unit **122** and card device **121**, may be of any type, including any kind of service application or application for an operating system of mobile control unit **122**, card device **121**, or both. Thus, an application could provide certain functionality for mobile device **120**, such as to obtain or utilize a certain service provided through mobile device **120**. By way of example, an application may relate to e-mail services, to a maintenance program of personal data, such as addresses and the like, to a banking application for enabling online banking, to information services, such as news services, local traffic information, information regarding local events, and the like. Additionally, an application may pertain to an operating system of mobile device **120**, i.e. controlling mobile control unit **122**, card device **121**, or both. These applications may add certain basic functionality to mobile device **120**, such as the capability to securely transmit data, the ability to utilize certain compression techniques, applications enabling the use of application programs, and others.

As detailed above, application manager **101** of application center **100** is responsible for determining the zero or more allotted application identifiers **103**, and the zero or more application identifiers **104** of applications loaded on mobile device **120** based at least in part on assigned mobile device identifier **152**, assigned card device identifier **154**, or both, and to identify at least one application identifier of the zero or more allotted application identifiers **103**, which does not form part of the zero or more application identifiers **104** of applications loaded on mobile device **120**.

Application loader **102** of application center **100** is responsible for loading the at least one determined application identifier to mobile device **120**.

According to one embodiment of the present invention, application manager **101** and application loader **102**, i.e., the functionality realized by application manager **101** and application loader **102** is implemented by executing code instructions of corresponding programs on a data processing device. Application manager **101** and application loader **102** may thus be realized by loading corresponding executable code sections from a memory into a processor and executing the executable code sections. Furthermore, while it is possible that application manager **101** and application loader **102** may be implemented by the same processing device, it is also possible that a group of processing devices, co-located or remotely located from one another, implement application manager **101** and application loader **102**. Alternatively, application manager **101**, application loader **102**, or both, may be at least partially realized by hardware elements.

According to one embodiment of the present invention, application manager **101** enters communications with mobile device **120**, network **150**, e.g., a serving communication network, or both, to determine the location of mobile device **120**, information regarding network **150** such as an identifier, char-

acteristics of network **150**, or both, subscription information of a user, one or more user preferences, and a type of mobile device **120** and card device **121**. Application loader **102** can obtain this information by accessing corresponding registries of network **150**, registering a location of mobile device **120**, an identifier of network **150**, user subscription information, and one or more user preferences. Alternatively, or in addition thereto, application manager **101** transmits corresponding requests to network **150**, mobile device **120**, or both, to obtain the above information.

Mobile device **120** of FIG. **1** is shown as a mobile telephone, but may instead also be any other kind of mobile communication device. For example, mobile device **120** may be a mobile computing device, such as a laptop computer, a personal digital assistant (PDA), or the like.

Mobile device **120** is able to enter a one- or bi-directional communication with a network **150** and application center **100**, and may operate in accordance with any standard, such as according to the GSM (Global System for Mobile Communications) standard, the UMTS (Universal Mobile Telecommunications System) standard, also known as wide band CDMA (WCDMA), the CDMA2000 (Code Division Multiple Access 2000) standard, or may operate according to a wireless LAN standard, 3G (third generation) or beyond 3G networks, or any standard for wireless communication with distributed medium access control. Mobile device **120** may also be capable of implementing a plurality of standards or access technologies and thus may be able to connect to wireless communication networks operating in accordance with different standards.

As shown in FIG. **1**, mobile device **120** maintains a communication link, such as an RF connection, to network **150**. This communication link is for use by voice or data services and for communicating with application center **100**. However, it is also possible that mobile device **120** maintains more than one communication link to support communications with network **150** on the one hand and for communicating with application center **100** on the other hand.

Communications carried out by or using mobile device **120** may involve voice communications, data communications, or both, e.g. in a regular telephone call or in a data communication between two parties.

Network **150** may include any kind of wireless communication network **150** operating according to any communication standard or combinations thereof, such as the GSM (Global System for Mobile Communications) standard, the UMTS (Universal Mobile Telecommunications System) standard, also known as wide band CDMA (WCDMA), the CDMA2000 (Code Division Multiple Access 2000) standard, wireless LAN standard, 3G (third generation) or beyond 3G networks, as noted above.

According to one embodiment of the present invention, mobile control unit **122** at mobile device **120** includes a processing unit and a memory for storing data, coded instructions pertaining to applications, or both. Mobile control unit **122** is responsible for communicating with card device **121**, and is responsible for operating mobile device **120**, i.e., to provide the functions of mobile device **120**, and integrates an operating system of mobile device **120**. Furthermore, mobile control unit **122** is capable of receiving one or more application identifiers from application center **100** and installing the one or more application identifiers, e.g. in a memory of mobile control unit **122**. The functionality of mobile control unit **122** may be realized by coded instructions stored in a memory of mobile control unit **122** and loaded into a processing unit of mobile control unit **122**. Alternatively or in addition thereto, at least part of mobile control unit **122** may be realized in hardware.

Card device **121** is a card embedded with a computer chip for performing processing operations and for storing data, or any other kind of card device **121** having provided thereon a memory and a processing unit. According to one embodiment of the present invention, card device **121** includes a processing unit and a memory. The memory stores coded instructions of programs for realizing identification unit **125** and coded instructions of a program or programs for realizing application request unit **126**. These instructions can then be loaded into the processing unit, enabling card device **121** to execute the functionality of identification unit **125** and application request unit **126**.

Card device **121** may be constituted by any card device for mobile devices, such as a SIM (subscriber identification module), a UICC, or a smart card, or other kind of chip card. Card device **121** is a card insertable into a dedicated slot or compartment of mobile device **120** and connects to terminals of mobile device **120**.

According to one embodiment of the present invention, card device **121** includes a secure portable device such as a Java Card™ technology-enabled device, or the like. Java Card™ technology is described in Chen, Z. Java Card™ Technology for Smart Cards—Architecture and Programmer's Guide, Boston, Addison-Wesley, 2000.

According to one embodiment of the present invention, card device **121** includes a CDMA technology-enabled smart card. CDMA technology-enabled smart cards are described in Smart Card Stage I Description, Version 1.1, CDMA Development Group—Smart Card Team Document (May 22, 1996).

According to another embodiment of the present invention, card device **121** includes a SIM (Subscriber Identity Module card) card. The term "SIM card" describes the smart card used in GSM (Global System for Mobile Communications) mobile telephones. The SIM includes the subscriber's personal cryptographic identity key and other information such as the current location of the phone and an address book of frequently called numbers. The SIM is described in Digital cellular telecommunications system (phase 2+); Specification of the Subscriber Identity Module-Mobile Equipment (SIM-ME) interface, ETSI, GSM 11.11 version 7.4.0, Release 1998.

According to another embodiment of the present invention, card device **121** includes a WIM (Wireless Interface Module). A WIM is a smart card in a WAP (Wireless Application Protocol) phone. It is described in Wireless Identity Module Part: Security, WAP-260-WIM-20010712-a, Wireless Application Protocol Forum, Jul. 12, 2001. According to another embodiment of the present invention, card device **121** includes a USIM (Universal Subscriber Identity Module). A USIM is a smart card application resident on a UICC platform and defined by the 3rd Generation Partnership Project (3GPP). A USIM is described in the USIM specification, "Characteristics of the Universal Subscriber Identity Module (USIM) application," 3GPP TS 31.102, and the other 31 series of documents from 3GPP, and so is known to those of skill in the art.

According to another embodiment of the present invention, card device **121** includes a UIM (User Identity Module). A UIM is a smart card for a 3GPP Project 2 (3GPP2) mobile phone. The term "R-UIM" is used when the smart card is removable. A UIM is a super set of the SIM and allows CDMA (Code Division Multiple Access)-based cellular subscribers to roam across geographic and device boundaries. The R-UIM is described in a specification issued by the 3rd

Generation Partnership Project 2 (3GPP2) and entitled 3rd Generation Partnership Project 2; Removable User Identity Module (R-UIM) for CDMA2000 Spread Spectrum Systems, 3GPP2 C.S0023-0, Jun. 9, 2000.

The above description regarding various mobile phone technologies is not intended to be limiting in any way. Those of ordinary skill in the art recognize that other mobile devices may be used.

An operator of application center **100** or network **150** operator may own card device **121**, so that card device **121** and application center **100** are under control of the same entity.

According to one embodiment of the present invention, mobile device **120** and card device **121** or, alternatively, application request unit **126** are uniquely identifiable by identification codes, for example, mobile device **120**, more precisely mobile control unit **122** can be identified by an IMEISV (International Mobile Equipment Identity Software Version). Card device **121** can be identified by a card serial number and the application request unit by an AID (Application Identifier) in conjunction with an assigned applet identifier. According to one embodiment of the present invention, the effective mobile device identifier **155** or assigned card device identifier **154** is an IMEI (International Mobile Equipment Identifier), where effective mobile device identifier **155** or assigned card device identifier **154** has a value that differs from the value of assigned mobile device identifier **130**, effectively mimicking the assigned card device identifier as a mobile device identifier in IMEI form and obviating the need to transmit assigned mobile device identifier **130**.

According to one embodiment of the present invention, card device **121** reacts upon switching on mobile device **120** and then downloads data containing information such as characteristics or capabilities of mobile device **120**. According to another embodiment of the present invention, mobile device **120** carries out a boot process upon being switched on, part of this boot process being a reset operation of card device **121**. Zero or more initial information is then downloaded to card device **121**. The initial information may include assigned mobile device identifier **130** and information regarding characteristics or capabilities of mobile device **120**. If assigned mobile device identifier **130** or information regarding characteristics or capabilities of mobile device **120** is not included in the zero or more initial information, card device **121** actively requests the missing information. The information is then provided to application center **100** to facilitate determining the zero or more allotted application identifiers **103**.

Additionally, a processing unit of card device **121** may compare the value of a recently received or transient mobile device identifier **160** of mobile device **120** with a previously stored or persistent mobile device identifier **162** to determine whether card device **121** was inserted into another mobile device. In case card device **121** was inserted into another mobile device, the download operations of application identifiers may be triggered, i.e., effective mobile device identifier **155** may be transmitted to application center **100** and loading of application identifiers may be requested.

Card device **121** may use existing messages of a transport protocol to network **150**, application center **100**, or both, to send the identifiers to application center **100**, thus requiring only minor changes to an existing communication protocol.

FIGS. **2-8** illustrate loading one or more application identifiers to a mobile device in accordance with embodiments of the present invention. FIG. **2** provides a high level overview of the processes from a system perspective, while FIG. **3** provides a low level illustration of the processes from a system perspective. FIGS. **4** and **5** illustrate initialization, application management, and application loading from the perspectives of a mobile device and an application center. FIGS. **6-8** illustrate initialization, application management, and application loading from the perspectives of a user, a card device of a mobile device, a mobile control unit of the mobile device, an application center, and a network. FIG. **9** illustrates application identifier releasing methods from the perspectives of a user, a card device of a mobile device, a mobile control unit of the mobile device, an application center, and a network. The operations of FIGS. **2-9** may be carried out using the communication environment shown in FIG. **1**, however, FIGS. **2-9** are not limited thereto.

Turning now to FIG. **2**, a high level flow diagram that illustrates a method for loading one or more application identifiers to a mobile device from a system perspective in accordance with one embodiment of the present invention is presented. The processes illustrated in FIG. **2** may be implemented in hardware, software, firmware, or a combination thereof. In operation **200**, the mobile device is booted upon being switched "on". During the boot process of the mobile device, the mobile control unit of the mobile device may also initialize the card device inserted into the mobile device such as card device **121** shown in FIG. **1**. In operation **205**, application management operations are performed, producing an indication of zero or more application identifiers to be loaded to the mobile device. The application management operations may be triggered by the occurrence of one or more events, including the passage of a predetermined amount of time. In operation **210**, the zero or more application identifiers determined in operation **205** are loaded to the mobile device. The zero or more application identifiers may be loaded with or without user input regarding whether one application identifiers allotted to but not loaded on a mobile device should be loaded to the mobile device.

Turning now to FIG. **3**, a low level flow diagram that illustrates a method for loading one or more application identifiers to a mobile device from a system perspective in accordance with one embodiment of the present invention is presented. FIG. **3** provides more detail for FIG. **2**. The processes illustrated in FIG. **3** may be implemented in hardware, software, firmware, or a combination thereof. In operation **300**, a user is enrolled for one or more applications. The enrollment establishes a relationship between the user and an application management center associated with the one or more applications. By way of example, the user may provide a payment in return for use of a service, which is enabled by an application capable of being downloaded to and executed on the user's mobile device. In operation **305**, the mobile control unit of the mobile device performs a boot process. During or after the boot process, the mobile control unit sends an assigned mobile device identifier to the card device. In operation **310**, trigger application management is performed. The trigger application management process detects the occurrence of one or more events that trigger an application management server process **315**. An exemplary trigger event is detecting that a particular assigned card device identifier is presently associated with a different assigned mobile device identifier, indicating the card has been placed in a different mobile device. Other examples are presented below. Upon occurrence of one of such triggering events, an application management server process **315** is initiated. Application management server process **315** determines which of one or more application identifiers, if any, should be loaded to the mobile device. If there are one or more application identifiers to be loaded to the mobile device, the one or more application identifiers are loaded to the mobile device at load operation **325**. Upon completion of the loading process, an administra-

tive update process **330** is performed to indicate the one or more application identifiers currently loaded on the mobile device.

Turning now to FIG. **4**, a flow diagram that illustrates initialization, application management, and application loading methods from the perspectives of a mobile device and an application center in accordance with embodiments of the present invention is presented. The processes illustrated in FIG. **4** may be implemented in hardware, software, firmware, or a combination thereof. In operation **401** an effective mobile device identifier is determined. According to one embodiment of the present invention, the effective mobile device identifier also includes an identifier that uniquely identifies a particular card device associated with the mobile device. In operation **402** the effective mobile device identifier is transmitted to application center **455**, e.g. to application center **100** shown in FIG. **1**. The transmission of the effective mobile device identifier to application center **455** may include any kind of transmission technique, such as any kind of wireless transmission, may include wire-bound transmissions, package-switched transmissions and so on.

According to one embodiment of the present invention, the effective mobile device identifier is determined based upon an assigned mobile device identifier, an assigned card device identifier, or both.

Still referring to FIG. **4**, in operation **403**, application center **455** receives the effective mobile device identifier. Upon the occurrence of a triggering event, in operation **404**, zero or more allotted application identifiers and zero or more application identifiers of applications loaded on mobile device **450** are determined based at least in part on the effective mobile device identifier. For example, application center **455** stores for each effective mobile device identifier zero or more allotted application identifiers and zero or more application identifiers of applications loaded on mobile device **450**. The zero or more allotted application identifiers may thus be tailored to an individual mobile device.

Alternatively, or in addition thereto, a first effective mobile device identifier is associated with a first set of mobile devices having a first zero or more allotted application identifiers, and a second effective mobile device identifier is associated with a second set of mobile devices having a second zero or more allotted application identifiers. Membership in one of the sets of mobile devices may be determined based at least in part on mobile device capabilities, mobile device type, mobile device user subscription, or mobile device user preferences. Those of ordinary skill in the art recognize that other membership criteria may be used.

The zero or more allotted application identifiers may be permanently stored at application center **455**, or may be determined on demand, e.g. upon receiving an effective mobile device identifier. In the first case, application center **455**, using the effective mobile device identifier, simply identifies a memory section, in an application store of application center **455**, holding the zero or more allotted application identifiers. The same cases apply to the zero or more application identifiers of applications loaded on mobile device **450**. In the alternative, the zero or more allotted application identifiers are determined upon receiving the effective mobile device identifier, e.g. based at least in part on certain rules, such as a location of mobile device **450**, an identity of a user of mobile device **450**, a network, or other criteria.

As noted before, the zero or more allotted application identifiers may include coded instructions corresponding to the application identifiers, or may include identifiers of the applications, which can later be used to retrieve coded instructions corresponding to the application identifier from another location.

Similarly, the zero or more application identifiers of applications loaded on mobile device **450** may be permanently stored and updated, i.e., when an application identifier is loaded to mobile device **450**, the corresponding application identifier could be included into the zero or more application identifiers of applications loaded on mobile device **450**. Alternatively, the zero or more application identifiers of applications loaded on mobile device **450** are determined on demand, e.g. when receiving the effective mobile device identifier. In this case application center **455** may interrogate mobile device **450** to learn about application identifiers loaded on mobile device **450**. Alternatively, the information regarding identifiers of applications loaded on mobile device **450** may be transmitted in association with the effective mobile device identifier to application center **455**, i.e., at operation **402**.

Once the zero or more allotted application identifiers and the zero or more application identifiers of applications loaded on mobile device **450** are identified, in operation **405** an application identifier of the zero or more allotted application identifiers, which does not form part of the zero or more application identifiers of applications loaded on mobile device **450**, is determined. In operation **410**, an application identifier is selected for loading to mobile device **450**. By way of example, if a set comparison of the zero or more allotted application identifiers and the zero or more application identifiers of applications loaded on mobile device **450** yields a set, possibly empty, of application identifiers of the zero or more allotted application identifiers, which do not form part of the zero or more application identifiers of applications loaded on mobile device **450**, one or more of the application identifiers, which do not form part of the zero or more application identifiers of applications loaded on mobile device **450**, are selected for loading to mobile device **450**.

According to one embodiment of the present invention, determining the one or more application identifiers from the zero or more allotted application identifiers, which are not already loaded, includes a selection operation. The selection operation may include applying a randomized selection process to select a predetermined number of application identifiers for loading to mobile device **450**, the predetermined number, for example, depending on an available time for loading application identifiers, or an available bandwidth.

According to another embodiment of the present invention, the selection process includes assigning priorities to application identifiers, and loading the application identifiers in the sequence of their priority. By way of example, application identifiers associated with an operating system of mobile device **450**, assuring proper functioning of mobile device **450**, may be assigned a higher priority. Similarly, application identifiers enabling services requested by a user may be assigned a high priority. By way of example, if a user makes a request that requires a mail service, the mail service may be assigned a high priority with respect to other application identifiers that are not needed for executing the mail service or application identifiers that are not required for proper functioning of mobile device **450**.

After identifying the application identifier or application identifiers to be loaded to mobile device **450**, the zero or more application identifiers of applications loaded on mobile device **450** can be appropriately updated by including application identifiers, which are or will be loaded to mobile device **450**.

Thereafter, in operation **406**, the one or more application identifiers are transmitted to mobile device **450**. In operation

407, mobile device 450 receives the one or more application identifiers. As noted before, the transmission of the application code or identifier may employ an existing communication link between mobile device 450 and application center 455 or a serving network, or may employ a dedicated communication link. In operation 408, the one or more application identifiers are installed on mobile device 450, e.g. by storing the application code in a memory of mobile device 450, enabling a later loading of the code into a processing device of mobile device 450 for realizing the functionality of the application identifier.

According to one embodiment of the present invention, mobile device 450 returns a completion indicator to application center 455, indicating a successful loading of the application identifier or the application identifiers, to enable application center 455 to appropriately update the zero or more application identifiers of applications loaded on mobile device 450.

Turning now to FIG. 5, a flow diagram that illustrates a method for determining a load event, in accordance with one embodiment of the present invention, is presented. FIG. 5 illustrates events that may trigger performance of the application management server process, such as process 315 of FIG. 3 and processes 404 and 405 of FIG. 4. The processes illustrated in FIG. 5 may be implemented in hardware, software, firmware, or a combination thereof. As shown in operation 501, exemplary triggering events include a determination that a predetermined amount of time has lapsed (505), a determination that the location of the mobile unit has changed (510), a determination that there has been a handover between serving networks (515), a determination that there has been a handover between cells of a serving network (520), a determination of a user request (525), and a determination that a card device has been removed from a first mobile device and inserted into a second mobile device that has an assigned mobile device identifier different from the one assigned to the first mobile device (530). Upon determining an application management condition has been fulfilled, application management process 404 (FIG. 4) is initiated.

In operation 501 a determination is made regarding whether an application management condition is fulfilled. According to one embodiment of the present invention, an application management condition includes the lapse of a predetermined amount of time. Thus, mobile devices may be regularly checked in view of application identifiers loaded. The predetermined period of time could for example be a month, a week or any other period of time.

According to one embodiment of the present invention, an application management condition includes a change of location of the mobile device. For example, if the mobile device changes its location, a localized set of application identifiers may be allotted to the mobile device. The change of location may also trigger loading one or more of the newly allotted applications.

According to one embodiment of the present invention, an application management condition includes carrying out a handover between serving networks. A handover between serving networks may require a downloading of a different set of application identifiers to the mobile device, e.g. an indication of application identifiers required for accessing the mobile device, an indication of application identifiers allotted to the mobile device when served by the new network, and the like.

According to one embodiment of the present invention, an application management condition includes a handover between cells of a serving network. Finally, according to another embodiment of the present invention, an application management condition is constituted by a specific user request to load further application identifiers to the mobile device. A user of the mobile device may for example enter the user request by pressing a certain key or combination of keys at the mobile device.

According to one embodiment of the present invention, an application management condition includes the detection of a new (assigned card device identifier, assigned mobile device identifier) combination. Accordingly, each time a combination of an assigned card device identifier and assigned mobile device identifier differs from a previously received combination of card device identifier and assigned mobile device identifier, information regarding identifiers of applications loaded on the mobile device needs to be obtained. Receiving a new (assigned card device identifier, assigned mobile device identifier) combination indicates that the card device has been inserted into another mobile device.

According to one embodiment of the present invention, an application management condition may also include the fact that new application identifiers or sets of application identifiers become available or are newly supported by the application center or a serving network.

The information acquired in operation 501 may be obtained by the application center through requesting the card device, the mobile control unit, the serving network, or any combination thereof.

In operation 502, it is then determined whether an application management condition is fulfilled. If in operation 502, at least one application management condition is fulfilled, the flow of operations continues at an entry point B in FIG. 4, i.e., the flow of operations continues with operation 420 of FIG. 4 for determining of zero or more allotted application identifiers and zero or more application identifiers of applications loaded on mobile device 450.

If in operation 502, none of the application management conditions are fulfilled, the flow returns to operation 501, i.e., the flow continues to check application management conditions until at least one of the application management conditions is fulfilled.

Turning now to FIG. 6, a flow diagram that illustrates initialization, application management, and application identifier loading methods from the perspectives of a user 675, a card device 680 of a mobile device 690, a mobile control unit 685 of mobile device 690, an application center 695, and a network 697 in accordance with embodiments of the present invention is presented. The processes illustrated in FIG. 6 may be implemented in hardware, software, firmware, or a combination thereof.

Upon being switched "on", mobile control unit 685 of mobile device 690 performs a boot process 600. Mobile device 690 may be switched "on", by way of example, in response to the operation of a power button, the entering of a personal identification number of a user 675, or both. During the boot process of mobile device 690, mobile control unit 685 may also initialize card device 680 inserted into mobile device 690 such as the card device 121 shown in FIG. 1. During or after the boot process 600, in operation 605, mobile control unit 685 sends an identification request including the assigned mobile device identifier to card device 680. The identification request may be transmitted in association with an initialization method exchange between card device 680 and mobile control unit 685.

Card device 680 receives the identification request in operation 610 and stores the received assigned mobile device identifier in operation 615. In operation 617, card device 680 determines whether the mobile device has changed. If the assigned mobile device identifier is included in messages

exchanged between mobile control unit **685** and card device **680**, an identification unit, such as the identification unit **125** shown in FIG. **1**, analyzes the messages to retrieve or determine the assigned mobile device identifier. In an alternative to operation **600**, card device **680** can also issue a specific request for the assigned mobile device identifier to mobile control unit **685**, e.g. during a boot process or at any other point in time.

Application management may be initiated when application center **625** determines a load event has occurred and then sends a content management request to mobile control unit **685** of mobile device **690**. Alternatively, user **675** may initiate application management.

Upon receiving a content management request, in operation **630**, mobile control unit **685** sends an application management request to card device **680**. In operation **635**, card device **680** receives the application management request. In operation **640**, card device **680** determines an effective mobile device identifier. According to one embodiment of the present invention, determining the effective mobile device identifier includes performing a lookup operation in a permanent storage unit of card device **680** storing the effective mobile device identifier. As noted before, the effective mobile device identifier may also be transmitted in accordance with existing messages of communication protocols supported by mobile device **690**/card device **680** and application center **695**.

According to one embodiment of the present invention, the transmission of the effective mobile device identifier is carried out by making use of a secure data transmission path between card device **680** and application center **695**. The secure data transmission path between card device **680** and application center **695** may make use of any kind of encryption technique, including public key and shared key mechanisms.

Referring again to FIG. **6**, in operation **645**, card device **680** composes an application management request response including the effective mobile device identifier and possibly identification of the changed mobile device, and sends the application management request response to mobile control unit **685**. In operation **650**, mobile control unit **685** receives the application management request response and forwards the effective mobile device identifier to application center **695**. In operation **655**, application center **695** receives the effective mobile device identifier and forwards it to an application manager, such as application manager **101** shown in FIG. **1**. In operation **660**, the application manager determines zero or more allotted application identifiers based at least on the effective mobile device identifier. Generally, the identification operation may be as outlined with regard to the embodiment of FIG. **1** in connection with determining the zero or more allotted application identifiers based at least in part on the effective mobile device identifier.

Process **660** may include determining a type of mobile device **690**, card device **680**, or both. Process **660** may also include determining a manufacturing code, a manufacturing date, capabilities and other information regarding mobile device **690**, card device **680**, or both. Obtaining information regarding the type of mobile device **690**, card device **680**, or both enables selection of a tailored set of application identifiers for the zero or more allotted application identifiers.

Still referring to FIG. **6**, the application manager then obtains information regarding a mobile location. The mobile location is a geographical location or region, where mobile device **690** is positioned. For example, the location of mobile device **690** may be determined by interrogating network **697** serving mobile device **690**. A location of mobile device **690** may correspond to a base station of network **697** serving mobile device **690**, i.e. maintaining communications for a data exchange with mobile device **690**. According to another embodiment of the present invention, mobile device **690** includes a GPS (Global Positioning System) device for transmitting the location of mobile device **690**.

A location of mobile device **690** may be determined based at least in part on a geographical area served by entire network **697**, e.g. corresponding to a state or entire country. The location of mobile device **690** corresponds to a region smaller than the coverage area of a base station, e.g. obtained by triangulation techniques. Operation **660** may include obtaining information regarding network **697**, such as a network identifier, one or more services provided by network **697**, one or more application identifiers desired by a network operator and other information.

Additionally, operation **660** may include obtaining subscription information pertaining to a user subscription to services, features of services, or both. For example, a subscription could identify an email service, and a subscription of a feature could identify a subscription to an automatic email notification service. Moreover, operation **660** may include determining one or more user preferences, such as user settings of mobile device **690**, user setting for obtaining services and other user preferences. For example, a user preference may pertain to a call forwarding service or settings thereof, to an automatic reminder service.

The above information can be collected by application center **695** through inquiring of at least one of card device unit **680**, mobile control unit **685** or network **697**. Additionally, or in an alternative, the above information may be obtained by performing lookup operations in corresponding registries maintained at application center **695**, network **697**, or both.

Referring again to operation **660** of FIG. **6**, the application manager determines zero or more allotted application identifiers based at least in part on the collected information. Consequently, the zero or more allotted application identifiers may include one or more application identifiers allotted to mobile devices at a certain location. The one or more application identifiers may include application identifiers for providing local information, local news, local traffic information, local information regarding services, such as train schedules, flight departures and other information. Furthermore, one or more of application identifiers of the zero or more allotted application identifiers may be defined in correspondence to a language associated with a location of mobile device **690**. Moreover, the zero or more allotted application identifiers may include one or more application identifiers associated with network **697**, such as application identifiers pertaining to special services provided by network **697**, application identifiers required for accessing network **697** and other application identifiers. Additionally, the zero or more allotted application identifiers may include sets of application identifiers pertaining to a user subscription of services or features thereof, one or more user preferences, or both as noted above.

While the zero or more allotted application identifiers can be permanently stored at application center **695** and updated from time to time, it is also possible that the zero or more allotted application identifiers are determined upon receiving the effective mobile device identifier. According to one embodiment of the present invention, the application manager identifies a type of card device **680** based at least in part on the assigned card device identifier and identifies a type of mobile device **690** based at least in part on the assigned mobile device identifier. Then, the application manager determines at least part of the zero or more allotted application

identifiers based at least in part on the type of card device **680**, and at least part of the zero or more allotted application identifiers based at least in part on the type of mobile device **690**. Consequently, the zero or more allotted application identifiers may include zero or more allotted mobile application identifiers and zero or more allotted card application identifiers.

According to one embodiment of the present invention, the zero or more allotted application identifiers includes all application identifiers allotted by an operator of application center **695** to the (assigned card device identifier, assigned mobile device identifier) combination, e.g. for each specific combination of assigned card device identifier and assigned mobile device identifier. According to another embodiment of the present invention, an operator may allot sets of application identifiers for groups of (assigned mobile device identifier, assigned card device identifier) pairs, e.g. for mobile devices and card devices having certain features or processing capabilities.

Still referring to FIG. **6**, in operation **665** the application manager determines zero or more application identifiers of applications loaded on mobile device **690** by obtaining a list of identifiers of applications loaded on mobile device **690** from mobile device **690**. The application manager issues a loaded application identifier list request. In operation **670**, mobile control unit **685** receives the loaded application identifier list request and returns a loaded application identifier list.

According to one embodiment of the present invention, the indication of identifiers of applications loaded on mobile device **690** includes at least one identifier of the zero or more loaded applications, and may include further information such as a time of loading the respective application, further information regarding the application, such as version of the application and other information.

As shown in FIG. **6**, an application manager obtains a loaded application identifier list from mobile control unit **685** of mobile device **690**. Alternatively, application center **695** may maintain zero or more application identifiers of applications loaded on the mobile device for each (assigned card device identifier, assigned mobile device identifier) pair. As a further alternative, application center **695** may request the information regarding identifiers of applications loaded on the mobile device from another source, for example from network **697** serving mobile device **690**, from any other location, or any combination thereof.

Turning now to FIG. **7**, a flow diagram that illustrates application identifier loading methods from the perspectives of a user, a card device of a mobile device, a mobile control unit of the mobile device, an application center, and a network, with particular emphasis on user input regarding loadable application identifiers in accordance with embodiments of the present invention is presented. FIG. **7** is a continuation of FIG. **6**. The processes illustrated in FIG. **7** may be implemented in hardware, software, firmware, or a combination thereof. In operation **700**, the application manager identifies a mobile device application identifier, a card device application identifier of the zero or more allotted application identifiers, or both, or a plurality of those application identifiers, which do not form part of the zero or more application identifiers of applications loaded on the mobile device, as outlined with regard to previous embodiments. In operation **705**, the user input required for loadable application identifiers is determined. In operation **710**, a determination is made regarding whether user input is required.

If in operation **710** user input is not required, the unsolicited or "push-type" loading of one or more application identifiers to the mobile device proceeds in operation **800** of FIG. **8**.

If in operation **710** user input is required, in operation **715** a selection instruction including a list of application identifiers from which user **775** is to choose or select is sent to mobile control unit **785** of mobile device **790**. According to another embodiment of the present invention, the selection instruction includes an indication for an individual application identifier or groups of application identifiers, indicating whether the user should be involved in deciding on loading the respective application identifiers. In this case for example, each application identifier or group of application identifiers could be associated with a user selection instruction flag, which, when set, enables a user interaction when loading the application identifier.

The user selection instruction is transmitted to the mobile device, where it is received in operation **720**. The transmission of the user selection instruction may be in physical association with the transmission of operation **800** of FIG. **8**, i.e., the user selection instruction can be transmitted together with the application code or identifiers of the applications or indication of applications. However, it is also possible that the user selection instruction is only logically associated with the transmission of operation **800**, i.e., the user selection instruction may be transmitted at a later point in time.

According to one embodiment of the present invention, the user selection instruction includes a simple flag which, when set, indicates that user **775** should be involved in selecting the application identifiers to be actually loaded to the mobile device.

In operation **725**, the list received from application center **795** is displayed to user **775** and user **775** is prompted to indicate whether to install the application identifier or refrain from installing the application identifier. The user prompt may be displayed on a display unit associated with mobile device **790**, e.g. on a display screen of a mobile telephone or mobile computing device. User **775** may make a selection by pressing a predetermined key or predetermined sequence of keys.

In operation **730**, mobile control unit **785** receives a user selection from user **775**. In operation **735**, unselected items are removed from the list received in operation **720** to create a modified list. In operation **740**, the modified list is returned to application center **795**. In operation **745**, application center **795** receives the modified list.

Turning now to FIG. **8**, a flow diagram that illustrates application identifier loading methods from the perspectives of a user **875**, a card device **880** of a mobile device **890**, a mobile control unit **885** of mobile device **890**, an application center **895**, and a network **897**, with particular emphasis on providing a proof of loading in accordance with embodiments of the present invention is presented. FIG. **8** is a continuation of FIG. **7**. The processes illustrated in FIG. **8** may be implemented in hardware, software, firmware, or a combination thereof.

In operation **800**, application center **895**, e.g. via application loader **102** shown in FIG. **1**, transmits one or more mobile application identifiers to be loaded on mobile device **890**. The one or more mobile application identifiers may be transmitted as one or more sequences of coded instructions. As noted above, priorities may be assigned to application identifiers or groups of application identifiers, and the application identifiers or groups of application identifiers may be transmitted in the order of prioritization. According to one embodiment of the present invention, an available timeframe for transmitting

application identifiers, an available amount of data for transmission, or both is determined, and application identifiers are selected for transmission in the order of their priority, until the data limit is reached.

The operations illustrated with regard to FIG. **8** enable a provision of a tailored zero or more allotted application identifiers for a mobile device or a combination of mobile device and card device.

While the operations shown in FIGS. **6-8** are illustrated in a specific order, other sequences of the operations are conceivable, for example determining zero or more application identifiers of applications loaded on the mobile device (operation **665** of FIG. **6**) could be carried out after determining zero or more allotted application identifiers (operation **660** of FIG. **6**) and before identifying (operation **700** of FIG. **7**) and transmitting (operation **800** of FIG. **8**).

In operation **805**, mobile control unit **885** of mobile device **890** receives the one or more application identifiers. The mobile application identifier may be directly transmitted to mobile control unit **885**, through a communication link between mobile device **890** and network **897**, and application center **895**. In an alternative the mobile application identifier is transmitted through card device **880**, i.e., first routed through the receiver of mobile device **890** to card device **880** and then distributed to mobile control unit **885**. In this case the transmission of the mobile application identifier may utilize a secure data transmission link between card device **880** and application center **895**.

In case of a transmission of only an identifier of the mobile applications, operation **805** may further include retrieving code instructions of the respective applications from another source. This may include retrieving code instructions stored in compressed form in an application library available at mobile device **890** or available at an external location, accessible by mobile device **890**.

Still referring to FIG. **8**, operation **862** indicates the processes that are performed for each application identifier received in operation **805**. In operation **810**, a determination is made regarding whether the application identifier received in operation **805** is a reference to a card application. If the application identifier is a card application, in operation **815** the card application is sent to card device **880**. In operation **820**, card device **880** receives the card application. In operation **825**, the card application is committed to card device **880**. In operation **830**, a proof of loading is sent to mobile control unit **885**. In operation **835**, mobile control unit **885** receives the proof of loading from card device **880**.

If in operation **810**, it is determined that the application identifier is not a card application identifier, the application identifier is installed on the mobile device. In operation **860**, a proof of loading for the application identifier loaded on the mobile device is determined. According to one embodiment of the present invention, operation **860** includes sending the proof of loading to card device **880** and requesting that card device **880** confirm the loading of the mobile device application identifier by cryptographically signing the proof of loading and returning the cryptographically signed proof of loading to mobile control unit **885**.

Regardless of whether the application identifier is a card device application or a mobile device application, and regardless of whether the proof of loading is cryptographically signed, in operation **840** the proof of loading is sent to application center **895**. Application center **895** receives the proof of loading in operation **864**. Upon completion of operation **862** for each of the applications received in operation **805**, mobile control unit **885** sends a loaded application list to application center **895** in operation **845**.

Turning now to FIG. **9**, a flow diagram that illustrates application identifier releasing methods from the perspectives of a user **975**, a card device **980** of a mobile device **990**, a mobile control unit **985** of mobile device **990**, an application center **995**, and a network **997**, with particular emphasis on performing administrative updates in accordance with embodiments of the present invention is presented. FIG. **9** is a continuation of FIG. **8**. The processes illustrated in FIG. **9** may be implemented in hardware, software, firmware, or a combination thereof. In operation **900** the loaded application identifier list received in operation **850** of FIG. **8** is used to update the application identifier(s) loaded on the mobile device. In operation **905**, application center **995** updates the loaded application identifier register. Operation **905** may simply include entering an identifier of the respective application identifiers into the zero or more application identifiers, loaded on the mobile device but may also include entering further information, such as a point in time of loading the application identifier. Furthermore, the zero or more application identifiers of applications loaded on the mobile device may include information regarding versions of the identifiers of applications loaded on the mobile device, so that it can be identified whether an application identifier at the mobile device needs to be updated. Alternatively, the individual versions of an application identifier may also be treated as separate application identifiers, as noted before.

With the above operations, application identifiers have been installed or loaded to the mobile device, i.e. the card device, the mobile control unit, or both. However, it is also possible that application identifiers need to be released from the card device and the mobile control unit, to increase availability of memory space or if application identifiers are not required any longer for other reasons, such as if a certain service is un-subscribed, if a service provision is terminated at the mobile device, or for other reasons.

Therefore, in an optional operation **970** a release message is transmitted from mobile control unit **985** to application center **995**, in case one of the application identifiers is released from mobile control unit **985**. Similarly, a release message from card device **980** is transmitted to application center **995** via mobile control unit **985** if an application identifier is released from card device **980**. According to one embodiment of the present invention, the released messages include an identifier of the respectively released application identifiers. The messages may be transmitted along the same path as the identifiers, i.e., the released message of mobile device **990** may be routed through card device **980** to the application manager.

In operation **900**, upon receiving the released messages from mobile control unit **985**, card device **980**, or both, the application manager updates the zero or more application identifiers of applications loaded on mobile device in operation **900** and the loaded application identifier register in operation **905**. According to one embodiment of the present invention, the update operation includes deleting an identifier of the respectively unloaded applications from the zero or more application identifiers of applications loaded on the mobile device.

Turning now to FIG. **10**, a block diagram that illustrates a communication environment for loading application identifiers to a mobile device in accordance with one embodiment of the present invention is presented. FIG. **10** is similar to FIG. **1**, showing more detail of application center **100** and mobile device **120**. Objects **100**, **103**, **104**, **120**, **122**, and **121** of FIG. **1** correspond with objects **1000**, **1003**, **1004**, **1020**, **1022**, and **1021**, respectively, of FIG. **10**.

FIG. **10** illustrates an application center **1000** including a memory unit **1050**. Memory unit **1050** is subdivided into a program store **1055**, and an application store **1060**. Program store **1055** and application store **1060** may occupy different portions of memory unit **1050**, or may be arranged in physically separate elements of memory unit **1050**. Memory unit **1050** may be any kind of memory unit, such as a RAM, a hard disk, optical storage means or combinations thereof.

Furthermore, while memory unit **1050** is shown located at application center **1000**, it is also possible that at least portions thereof are located external to application center **1000**.

Application store **1060** stores the zero or more allotted application identifiers **1003** and the zero or more application identifiers **1004** of applications loaded on the mobile device, as outlined with regard to previous embodiments.

Furthermore, program store **1055** stores application manager instructions **1065**, and application loader instructions **1070**. Application manager instructions **1065** and application loader instructions **1070** are constituted by sequences of software instructions which, when loaded into a processing device, make the processing device realize the functionality of application manager **101** and application loader **102** described with regard to FIG. **1** and the other embodiments of the present invention.

Application center **1000** further includes a processing unit **1051** for loading application manager instructions **1065** and application loader instructions **1070**, to execute their functionality for loading application identifiers to mobile device **1020**. Processing unit **1051** may be constituted by a single unit, or may be constituted by a plurality of interacting processing elements. Processing unit **1051** and memory unit **1050** communicate, line **1095**, for example via a system bus, or via communication links between external elements of the processing unit **1051**, application center **1000**, or both.

FIG. **10** illustrates mobile device **1020**, including mobile control unit **1022** and card device **1021**.

Card device **1021** includes a memory unit **1090**. Memory unit **1090** includes identification unit instructions (not shown in FIG. **10**) and request unit instructions (not shown in FIG. **10**). The identification unit instructions and the request unit instructions are constituted by software instructions which, when loaded into a processing unit, make the processing unit to realize the functionality of the identification unit (element **125** of FIG. **1**) and the request unit (element **126** of FIG. **1**), respectively. Furthermore, the card device **1021** includes a central processing unit **1085** for correspondingly loading the identification unit instructions and request unit instructions and executing same. Furthermore, memory unit **1090** is provided for storing further programs of card device **1021**, data of card device **1021**, or both, and processing unit **1085** realizes further functionality of card device **1021**.

Additionally, mobile device **1020** includes mobile control unit **1022**, mobile control unit **1022** having a central processing unit **1075** and a memory unit **1080**. Memory unit **1080** is provided for storing program instructions to realize, together with central processing unit **1075**, the functionality of the mobile control **1022** unit as outlined with regard to the previous embodiments, and for realizing further operations of mobile device **1020**.

A program or programs may be provided having instructions adapted to cause a processing unit or a network of data processing units to realize elements of the above embodiments and to carry out the method of at least one of the above operations. Furthermore, a computer readable medium may be provided, in which a program is embodied, where the program is to make a computer execute the method of the above operation.

Also, a computer-readable medium may be provided having a program embodied thereon, where the program is to make a card device to execute functions or operations of the features and elements of the above described examples. A non-transitory computer-readable medium can be a magnetic or optical or other tangible medium on which a program is recorded. Additionally, a computer program product may be provided including the computer-readable medium.

In yet another example, a method for loading applications to a mobile device having an insertable card device includes

receiving from an application center a selection instruction comprising a list of application identifiers, the list of application identifiers comprising zero or more mobile device application identifiers corresponding to applications loadable to the mobile device, the list of application identifiers further comprising zero or more card device application identifiers corresponding to applications loadable to the card device;

displaying the list to a user of the mobile device;

receiving a user selection in response to the displaying, the user selection indicating zero or more of the application identifiers selected for loading to one or more of the mobile device and the card device;

removing unselected application identifiers from the list application identifiers to create a modified list; and

sending the modified list to the application center.

This embodiment of the method also includes receiving the application code associated with the application identifiers in physical association with the user selection instruction.

The method further includes receiving the application code associated with the application identifiers after receiving the user selection instruction.

The method also further includes receiving the application code associated with the application identifiers before receiving the user selection instruction.

The method still further includes prompting the user regarding whether to install applications corresponding to the zero or more application identifiers in the list.

The method yet still further includes displaying the user prompt on a display unit associated with the mobile device.

In another embodiment, a system for loading application identifiers to a mobile device having an insertable card device includes:

a mobile device comprising a mobile control unit;

a card device insertable into the mobile device, the card device comprising:

an identification unit for determining an effective mobile device identifier of a mobile device, wherein the effective mobile device identifier is based at least in part on the result of a process performed by the card device; and

an application request unit for transmitting the effective mobile device identifier,

wherein the card device is for loading application identifiers to the mobile device; and the card device is insertable into the mobile device; and

an application center comprising:

an application manager adapted:

for receiving an effective mobile device identifier for the mobile device;

for determining zero or more allotted application identifiers and zero or more application identifiers of applications loaded on the mobile device based at least in part on the effective mobile device identifier; and

for identifying at least one application identifier of the zero or more allotted application identifiers, which

does not form part of the zero or more application identifiers of applications loaded on the mobile device; and

an application loader adapted for loading the at least one application identifier to the mobile device.

In still yet a further embodiment, a mobile device includes:

an insertable card device; and

a mobile control unit adapted to:

receive from an application center a selection instruction comprising a list of application identifiers, the list of application identifiers comprising zero or more mobile device application identifiers corresponding to applications loadable to the mobile device, the list of application identifiers further comprising zero or more card device application identifiers corresponding to applications loadable to the card device;

display the list to a user of the mobile device;

receive a user selection in response to the displaying, the user selection indicating zero or more of the application identifiers selected for loading to one or more of the mobile device and the card device;

remove unselected application identifiers from the list application identifiers to create a modified list; and

send the modified list to the application center.

The mobile control unit is further adapted to receive the application code associated with the application identifiers in physical association with the user selection instruction. The mobile control unit is further adapted to receive the application code associated with the application identifiers after receiving the user selection instruction. The mobile control unit is still further adapted to receive the application code associated with the application identifiers before receiving the user selection instruction. The mobile control unit also is further adapted to prompt the user regarding whether to install applications corresponding to the zero or more application identifiers in the list. The mobile control unit is also still further adapted to display the user prompt on a display unit associated with the mobile device.

While embodiments and applications of this invention have been shown and described, it would be apparent to those skilled in the art having the benefit of this disclosure that many more modifications than mentioned above are possible without departing from the inventive concepts herein. The invention, therefore, is not to be restricted except in the spirit of the appended Claims.

What is claimed is:

1. A card device comprising:

an identification unit for determining an effective mobile device identifier of a mobile device,

wherein the effective mobile device identifier is based at least in part on the result of a process performed by the card device, and is based at least in part on an assigned mobile device identifier, and further wherein said assigned mobile device identifier is an identifier assigned to the mobile device prior to the mobile device being issued to a mobile device user, and still further wherein said assigned mobile device identifier uniquely identifies the mobile device; and

an application request unit for transmitting the effective mobile device identifier,

wherein said card device is for loading application identifiers to the mobile device; and said card device is insertable into the mobile device, and

wherein the identification unit is further adapted to request any one of (a) said assigned mobile device identifier from a mobile control unit of the mobile device in response to a request for the effective mobile device identifier, the card device having processed the assigned mobile device identifier to create the effective mobile device identifier; (b) said assigned mobile device identifier from said mobile control unit of the mobile device during an initialization procedure; and (c) said assigned mobile device identifier from said mobile control unit of the mobile device in response to a request for the effective mobile device identifier;

wherein the effective mobile device identifier comprises one or more of an assigned mobile device identifier cryptogram and an assigned card device identifier cryptogram, the assigned mobile device identifier cryptogram comprising the result of applying a cryptographic process to said assigned mobile device identifier, and the assigned card device identifier cryptogram comprising the result of applying a cryptographic process to an assigned card device identifier assigned to the card device prior to being issued to a card device user or being configured with the mobile device.

2. The card device of claim **1** wherein the identification unit is further adapted to request said assigned mobile device identifier from a mobile control unit of the mobile device in response to a request for the effective mobile device identifier, the card device having processed the assigned mobile device identifier to create the effective mobile device identifier.

3. The card device of claim **1** wherein the effective mobile device identifier comprises one or more of said assigned mobile device identifier and an assigned card device identifier, the assigned card device identifier having been assigned to the card device prior to being issued to a card device user or being configured with the mobile device.

4. A card device comprising:

an identification unit for determining an effective mobile device identifier of a mobile device,

wherein the effective mobile device identifier is based at least in part on the result of a process performed by the card device, and is based at least in part on an assigned mobile device identifier, and further wherein said assigned mobile device identifier is an identifier assigned to the mobile device prior to the mobile device being issued to a mobile device user, and still further wherein said assigned mobile device identifier uniquely identifies the mobile device; and

an application request unit for transmitting the effective mobile device identifier,

wherein said card device is for loading application identifiers to the mobile device; and said card device is insertable into the mobile device, and

wherein the effective mobile device identifier comprises one or more of an assigned mobile device identifier cryptogram and an assigned card device identifier cryptogram, the assigned mobile device identifier cryptogram comprising the result of applying a cryptographic process to said assigned mobile device identifier, and the assigned card device identifier cryptogram comprising the result of applying a cryptographic process to an assigned card device identifier assigned to the card device prior to being issued to a card device user or being configured with the mobile device.

5. The card device of claim **1** wherein the card device establishes a mapping between the effective mobile device identifier and said assigned mobile device identifier.

6. The card device of claim **1** wherein the application request unit is further adapted to receive at least one applica-

tion identifier and to install the at least one application identifier on at least one of a mobile control unit and the card device.

7. The card device of claim **1** wherein the application request unit is further adapted to receive an application code for loading on at least one of a mobile control unit and the card device.

8. The card device of claim **1** wherein the card device comprises a smart card.

9. An application center for loading application identifiers to a mobile device including an insertable card device, the application center comprising:

an application manager, executing on the application center, adapted:

for receiving an effective mobile device identifier from the mobile device,

wherein the effective mobile device identifier is based at least in part on the result of a process performed by the card device, and is based at least in part on an assigned mobile device identifier, wherein said assigned mobile device identifier is an identifier assigned to the mobile device prior to the mobile device being issued to a mobile device user, and still further wherein said assigned mobile device identifier uniquely identifies the mobile device;

for determining (i) zero or more allotted application identifiers, and (ii) zero or more application identifiers of applications loaded on the mobile device based at least in part on the effective mobile device identifier wherein an allotted application identifier is an application identifier for an application having executable application code capable of executing on a device and the executable application code is allowed for use on the device; and

for identifying at least one application identifier of the zero or more allotted application identifiers, which does not form part of the zero or more application identifiers of applications loaded on the mobile device; and

an application loader, on the application center, adapted for loading the at least one application identifier to the mobile device,

wherein the effective mobile device identifier comprises one or more of an assigned mobile device identifier cryptogram and an assigned card device identifier cryptogram, the assigned mobile device identifier cryptogram comprising the result of applying a cryptographic process to said assigned mobile device identifier, the assigned card device identifier cryptogram comprising the result of applying a cryptographic process to an assigned card device identifier assigned to the card device prior to being issued to a card device user or being configured with the mobile device.

10. The application center of claim **9** wherein the determining is based at least in part on a location indicator of the mobile device.

11. An application center for loading application identifiers to a mobile device including an insertable card device, the application center comprising:

an application manager, executing on the application center, adapted:

for receiving an effective mobile device identifier from the mobile device,

wherein the effective mobile device identifier is based at least in part on the result of a process performed by the card device, and is based at least in part on an assigned mobile device identifier, wherein said assigned mobile device identifier is an identifier assigned to the mobile device prior to the mobile device being issued to a mobile device user, and still further wherein said assigned mobile device identifier uniquely identifies the mobile device;

for determining (i) zero or more allotted application identifiers, and (ii) zero or more application identifiers of applications loaded on the mobile device based at least in part on the effective mobile device identifier wherein an allotted application identifier is an application identifier for an application having executable application code capable of executing on a device and the executable application code is allowed for use on the device; and

for identifying at least one application identifier of the zero or more allotted application identifiers, which does not form part of the zero or more application identifiers of applications loaded on the mobile device; and

an application loader, on the application center, adapted for loading the at least one application identifier to the mobile device,

wherein the effective mobile device identifier comprises one or more of an assigned mobile device identifier hash value and an assigned card device identifier hash value, the assigned mobile device identifier hash value comprising the result of applying a hashing process to said assigned mobile device identifier, the assigned card device identifier hash value comprising the result of applying a hashing process to an assigned card device identifier assigned to the card device prior to being issued to a card device user or being configured with the mobile device.

12. The application center of claim **9** wherein the zero or more allotted application identifiers comprise at least one of zero or more allotted mobile application identifiers and zero or more allotted card application identifiers.

13. The application center of claim **9** wherein the zero or more application identifiers of applications loaded on the mobile device comprise zero or more mobile applications for loading on the mobile device and zero or more card applications for loading on the card device.

14. The application center of claim **9** wherein the application loader is further adapted to transmit the at least one application identifier to at least one of a mobile control unit of the mobile device and the card device.

15. The application center of claim **9** wherein the application loader is further adapted to transmit an identifier of the at least one application to the mobile device, instructing at least one of a mobile control unit of the mobile device and the card device to load the code comprising the application.

16. The application center of claim **9** wherein the application loader is further adapted to transmit an application code for loading of the application on at least one of a mobile control unit of the mobile device and the card device.

17. A method for loading application identifiers to a mobile device having an insertable card device, the method comprising:

receiving, by an application center, an effective mobile device identifier from the mobile device,

wherein the effective mobile device identifier is based at least in part on the result of a process, performed by the card device, and is based at least in part on an assigned mobile device identifier, wherein said assigned mobile device identifier is an identifier assigned to the mobile device prior to the mobile

device being issued to a mobile device user, and still further wherein said assigned mobile device identifier uniquely identifies the mobile device;

determining, by the application center, (i) zero or more allotted application identifiers, and (ii) zero or more application identifiers of applications loaded on the mobile device based at least in part on the effective mobile device identifier wherein an allotted application identifier is an application identifier for an application having executable application code capable of executing on a device and the executable application code is allowed for use on the device; and

identifying, by the application center, at least one application identifier of the zero or more allotted application identifiers, which does not form part of the zero or more application identifiers of applications loaded on the mobile device;

identifying, by the application center, a type of the card device based at least in part on an assigned card device identifier contained in said effective mobile device identifier; and

determining, by the application center, at least part of the zero or more allotted application identifiers based at least in part on the type of the card device; and

transmitting, by the application center, one of the at least one application identifier and an identifier of the at least one application identifier to the mobile device.

18. The method of claim **17** wherein the determining zero or more allotted application identifiers is based at least in part on a location indicator of the mobile device.

19. The method of claim **17**, further comprising:

identifying, by the application center, a type of the mobile device based at least in part on the effective mobile device identifier; and

determining, by the application center, at least part of the zero or more allotted application identifiers based at least in part on the type of the mobile device.

20. The method of claim **17** wherein said determining the zero or more allotted application identifiers is based at least in part on at least one of:

a location indicator of the mobile device;

an identifier of a serving network;

user subscription information; and

one or more user preferences.

21. The method of claim **17** further comprising:

requesting, by the application center, information regarding identifiers of applications loaded on the mobile device.

22. The method of claim **17** further comprising:

requesting, by the application center, from the mobile device, information regarding identifiers of applications loaded on the mobile device upon detecting at least one of:

an absence of one or more identifiers of applications loaded on the mobile device; and

a lapse of a predetermined period of time.

* * * * *