US 20090021955A1

(19) United States

(12) Patent Application Publication

(10) Pub. No.: US 2009/0021955 A1

(43) Pub. Date: Jan. 22, 2009

Kuang et al.

(54) **CONTROL NETWORK FOR LED-BASED LIGHTING SYSTEM IN A TRANSIT VEHICLE**

(75) Inventors: **Baixiong Kuang**, Diamond Bar, CA (US); **Jerry Lin**, Rowland Heights, CA (US); **Yongchang Wang**, Diamond Bar, CA (US); **Chin Seong Khor**, Monterey Park, CA (US)

Correspondence Address:
IRELL & MANELLA LLP
1800 AVENUE OF THE STARS, SUITE 900
LOS ANGELES, CA 90067 (US)

(73) Assignee: **I/O CONTROLS CORPORATION**, Azusa, CA (US)

(21) Appl. No.: **11/850,659**

(22) Filed: **Sep. 5, 2007**

Related U.S. Application Data

(60) Provisional application No. 60/966,547, filed on Jul. 17, 2007.

Publication Classification

(51) **Int. Cl.**
B60Q 3/02 (2006.01)
B60Q 3/00 (2006.01)

(52) **U.S. Cl.** **362/479**; 315/77; 362/478

(57) **ABSTRACT**

A transit vehicle lighting system has a plurality of LED-based lighting fixtures for providing interior illumination. A control network comprises a plurality of slave nodes for controlling the LED-based lighting fixtures, and a master node for controlling the slave nodes. The master node may be connected to the slave nodes by a combined power/communication bus in a daisy chain fashion. The slave node may include a power regulator and a controller for providing a target current command to the power regulator, and may adjust the target current based upon temperature measurements or a recorded age of the LEDs. An optical sensor may provide automatic dimming. A reduced number of LEDs may be used in an emergency mode. The lighting fixture may include a ceiling panel fixture and a riser panel attachable by way of a hinge mechanism.

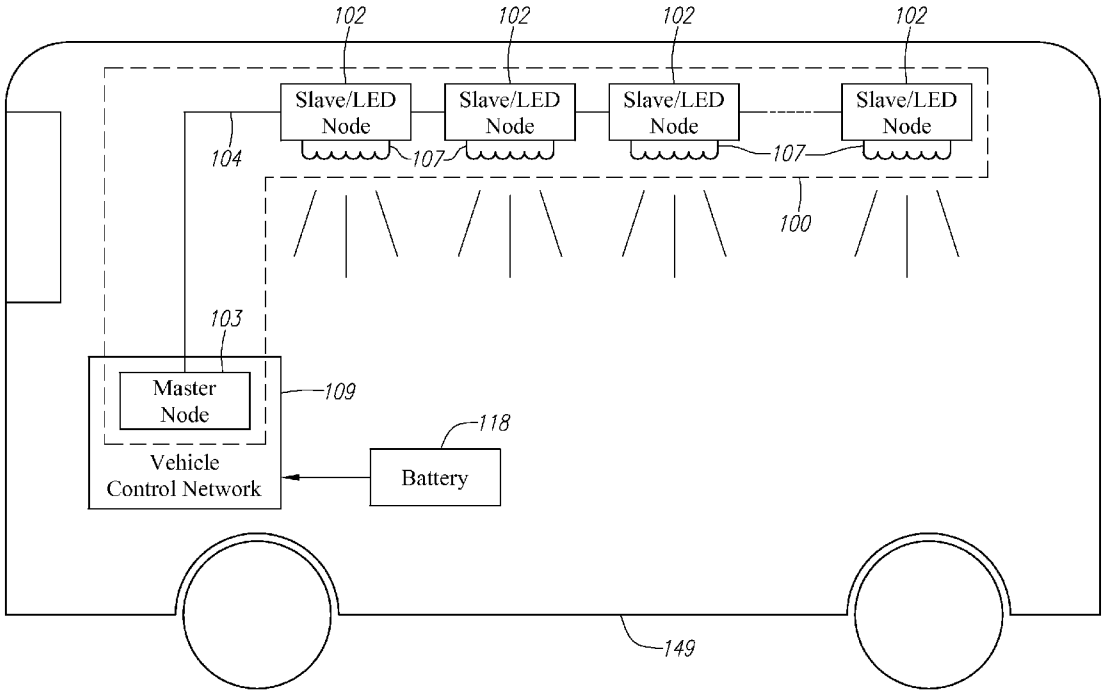

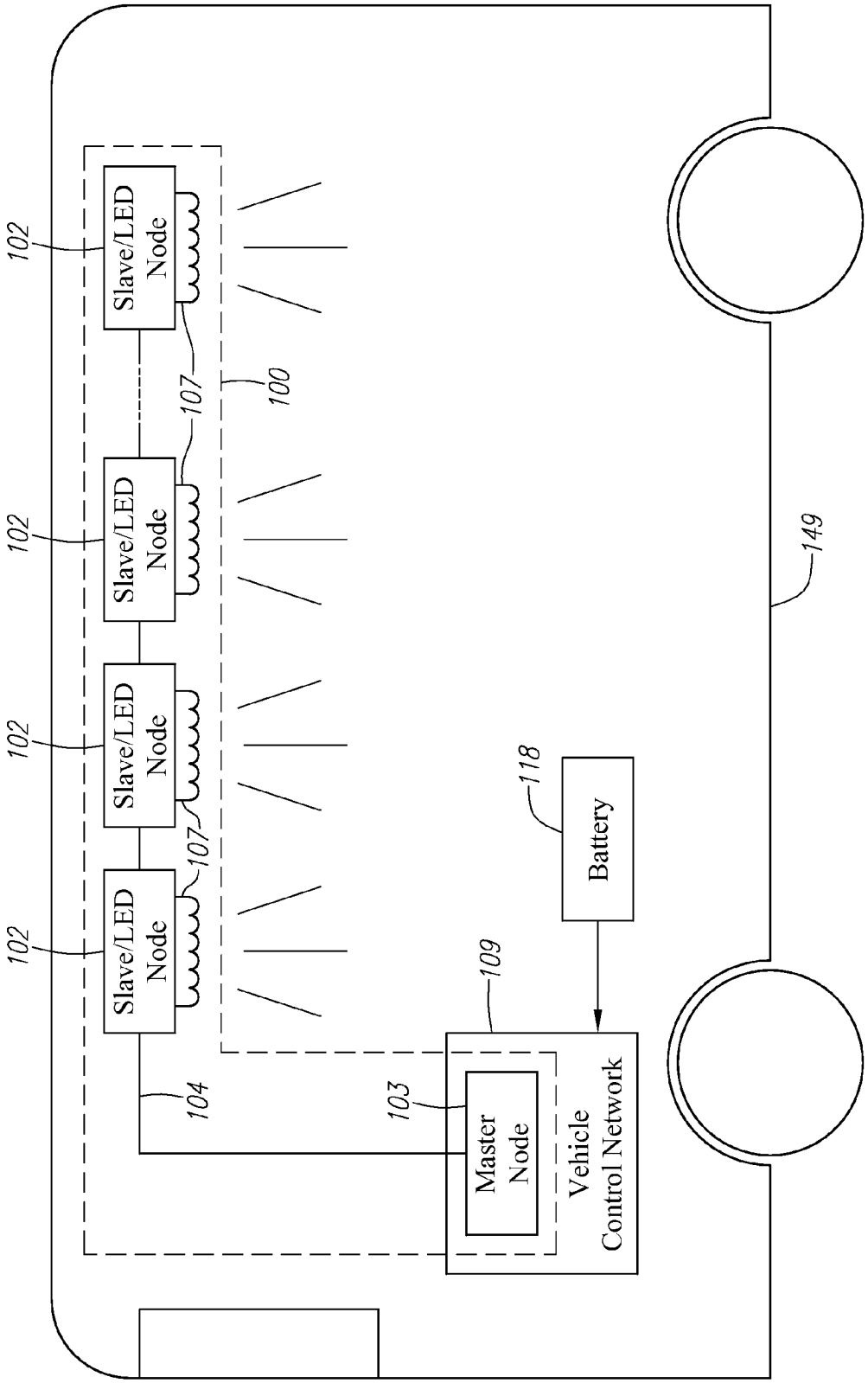
Slave/LED Node
Slave/LED Node
Slave/LED Node
Slave/LED Node
102
102
102
102
107
107
100
104
103
Master Node
Vehicle Control Network
109
Battery
118
149

FIG. 1

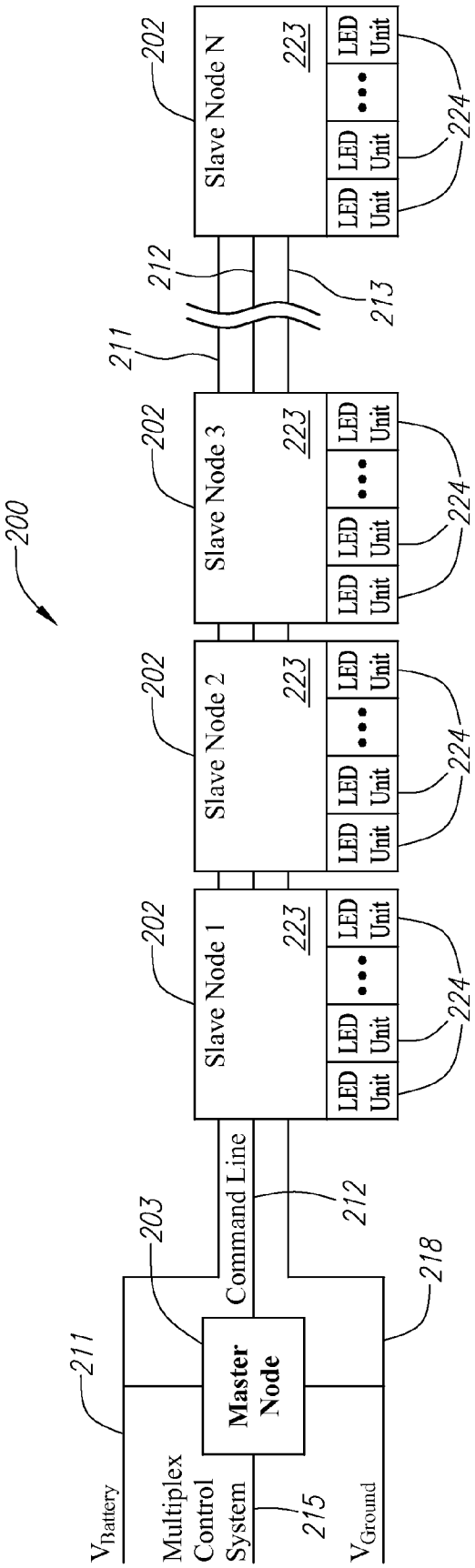
200
202
Slave Node N
223
LED Unit
LED Unit
LED Unit
224
212
213
211
202
Slave Node 3
223
LED Unit
LED Unit
LED Unit
224
202
Slave Node 2
223
LED Unit
LED Unit
LED Unit
224
202
Slave Node 1
223
LED Unit
LED Unit
LED Unit
224
Command Line
212
203
218
211
Master Node
$V_{Battery}$
Multiplex Control System
215
V_{Ground}

FIG. 2A

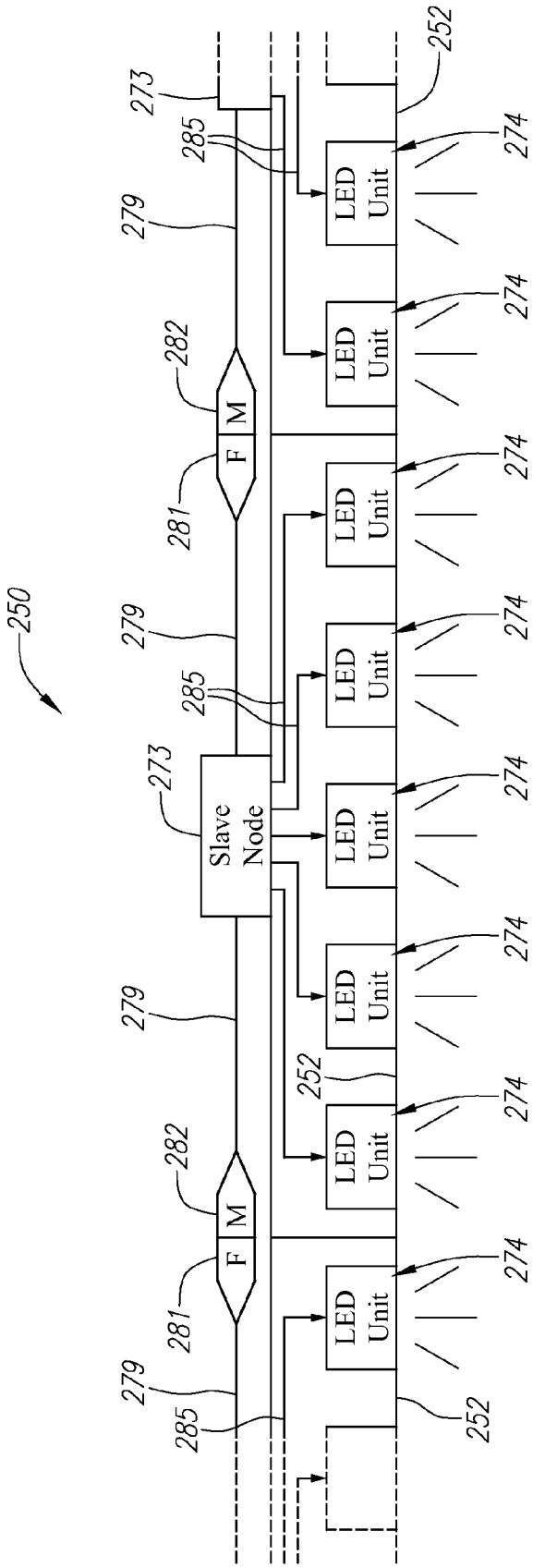

FIG. 2B

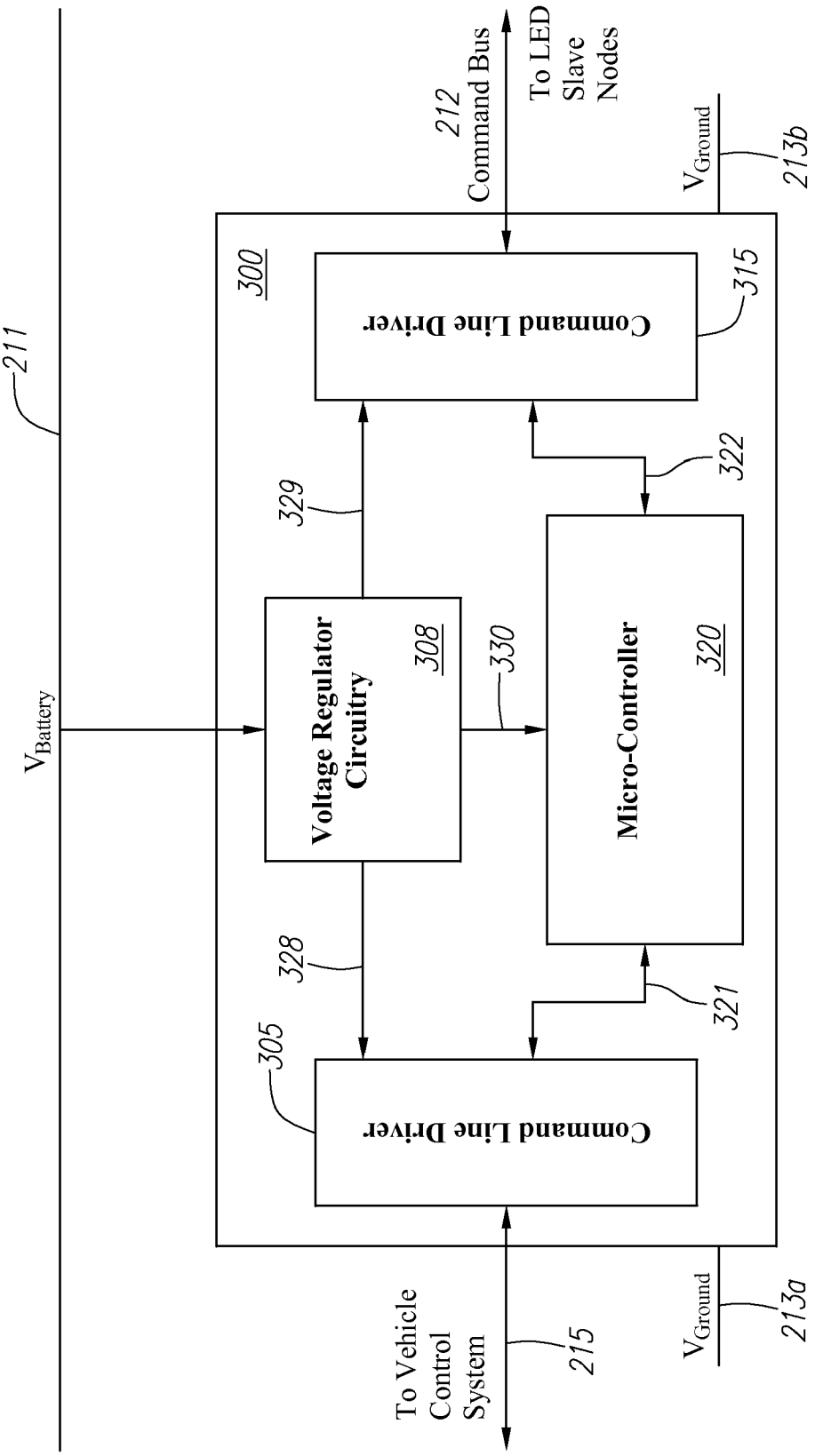
211
$V_{Battery}$
300
Voltage Regulator Circuitry
308
329
328
305
Command Line Driver
330
Micro-Controller
320
322
321
Command Line Driver
315
212
Command Bus
To LED Slave Nodes
V_{Ground}
213b
To Vehicle Control System
215
V_{Ground}
213a

FIG. 3

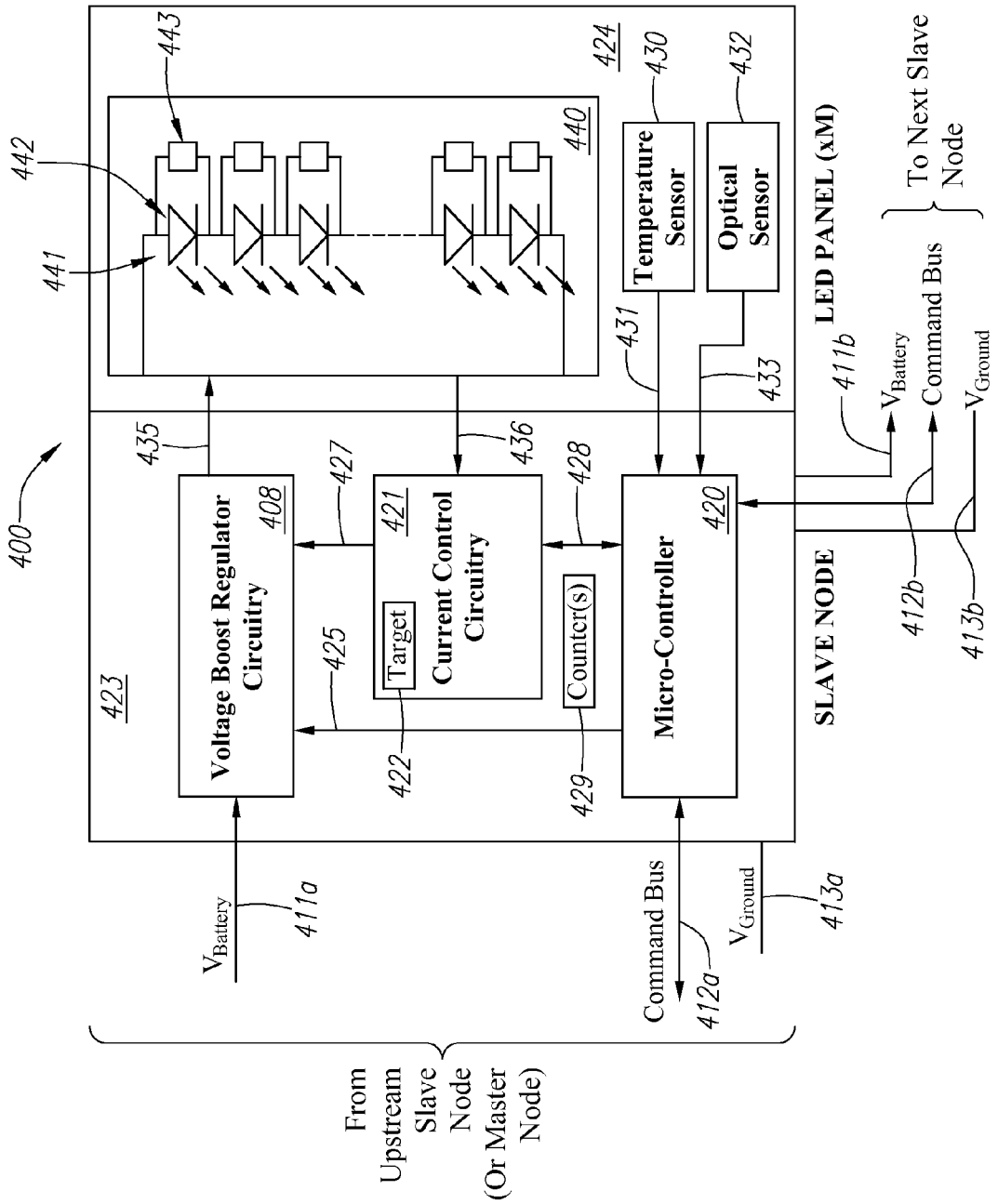
400
423
Voltage Boost Regulator Circuitry
408
Current Control Circuitry
421
Target
Counter(s)
Micro-Controller
420
SLAVE NODE
LED PANEL (xM)
440
441
442
443
424
Temperature Sensor
430
Optical Sensor
432
431
433
435
436
427
428
425
422
429
411a
411b
412a
412b
413a
413b
$V_{Battery}$
Command Bus
V_{Ground}
From Upstream Slave Node (Or Master Node)
To Next Slave Node

FIG. 4

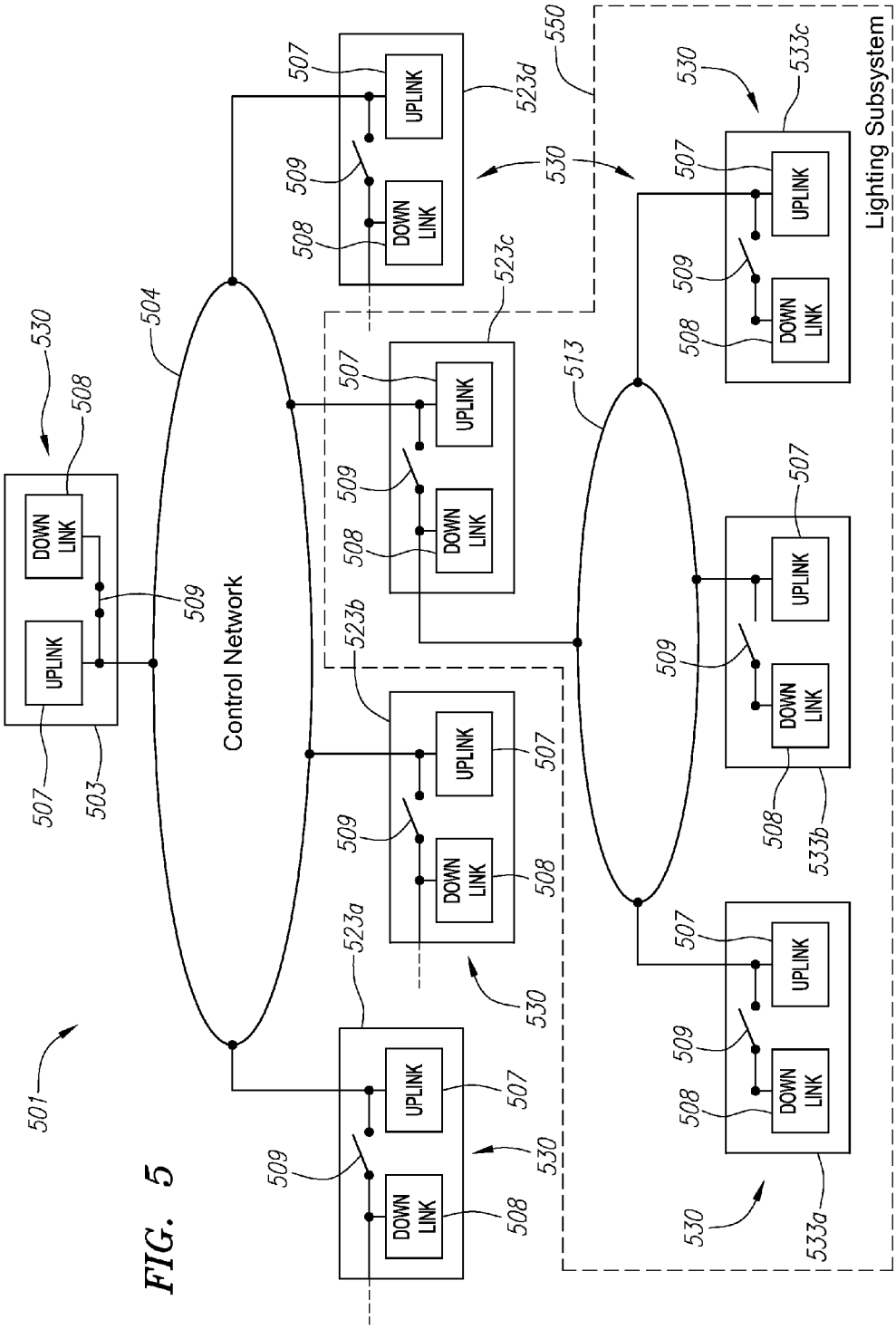
Control Network
Lighting Subsystem
UPLINK
DOWN LINK
501
503
504
507
508
509
513
523a
523b
523c
523d
530
533a
533b
533c
550

FIG. 5

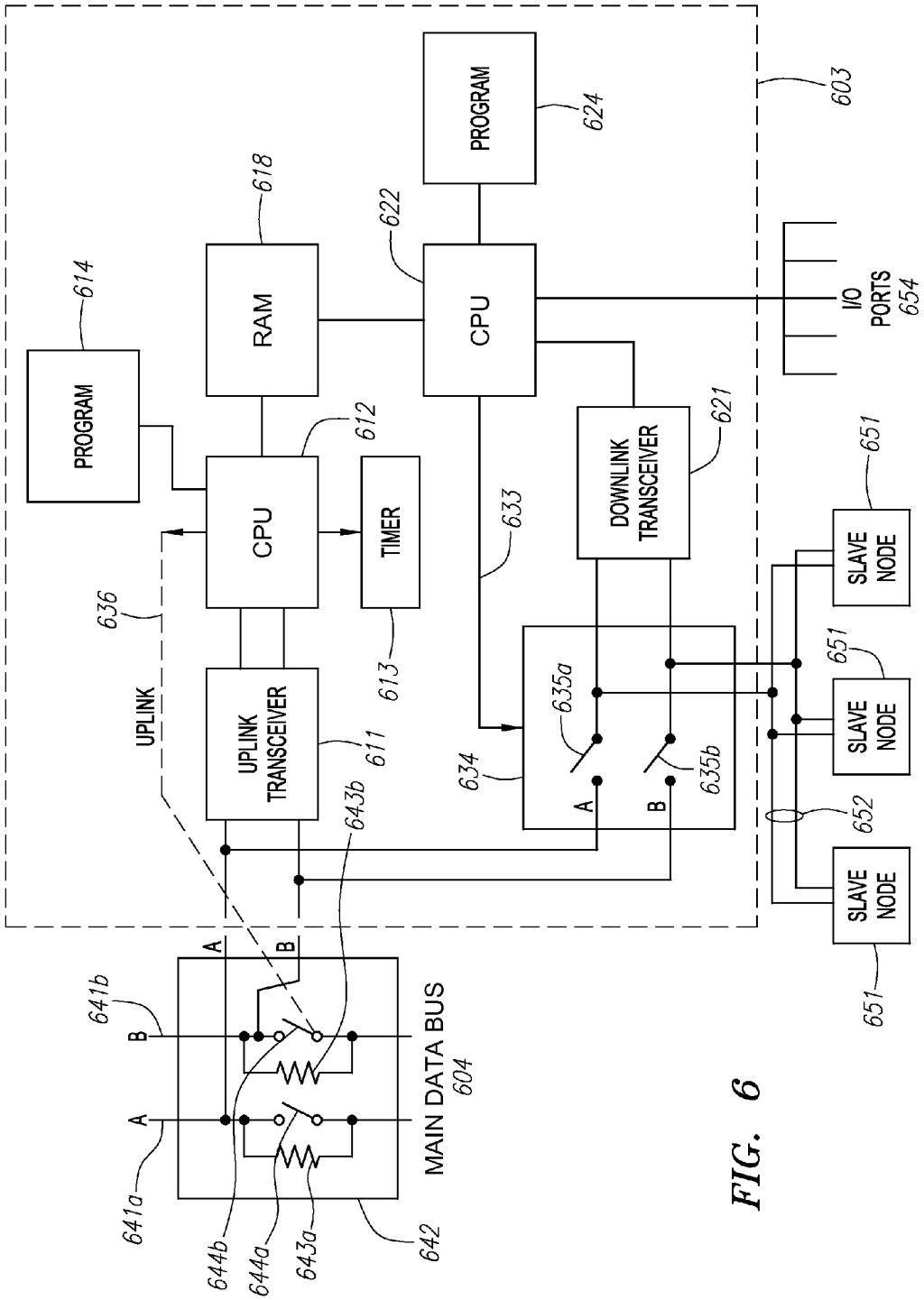
PROGRAM
614
RAM
618
CPU
612
TIMER
613
UPLINK
636
UPLINK TRANSCEIVER
611
643b
PROGRAM
624
CPU
622
603
I/O PORTS
654
DOWNLINK TRANSCEIVER
621
633
634
635a
635b
A
B
651
SLAVE NODE
652
641b
641a
644b
644a
643a
642
MAIN DATA BUS
604

FIG. 6

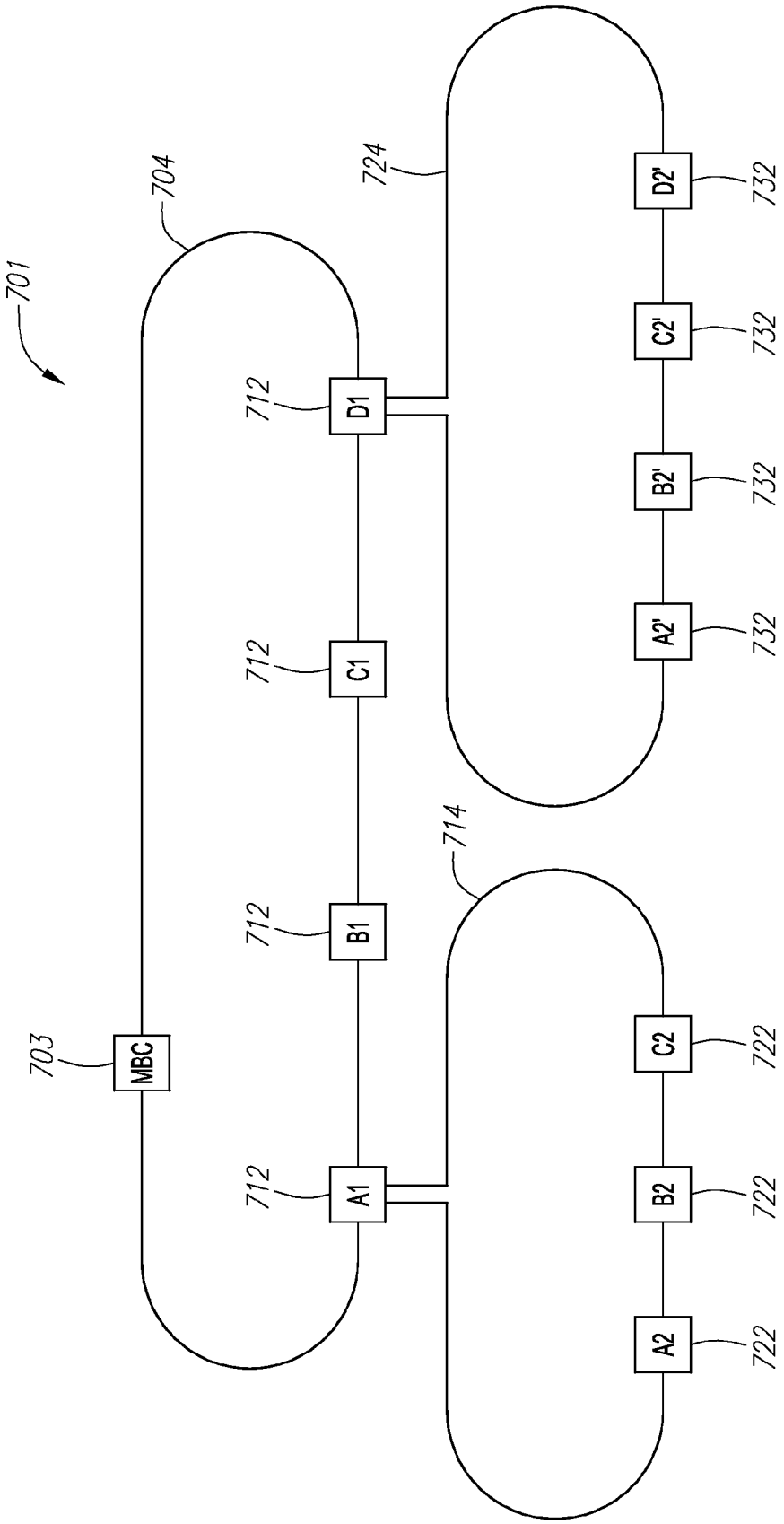
701
703
MBC
704
712
A1
712
B1
712
C1
712
D1
714
722
A2
722
B2
722
C2
724
732
A2'
732
B2'
732
C2'
732
D2'

FIG. 7

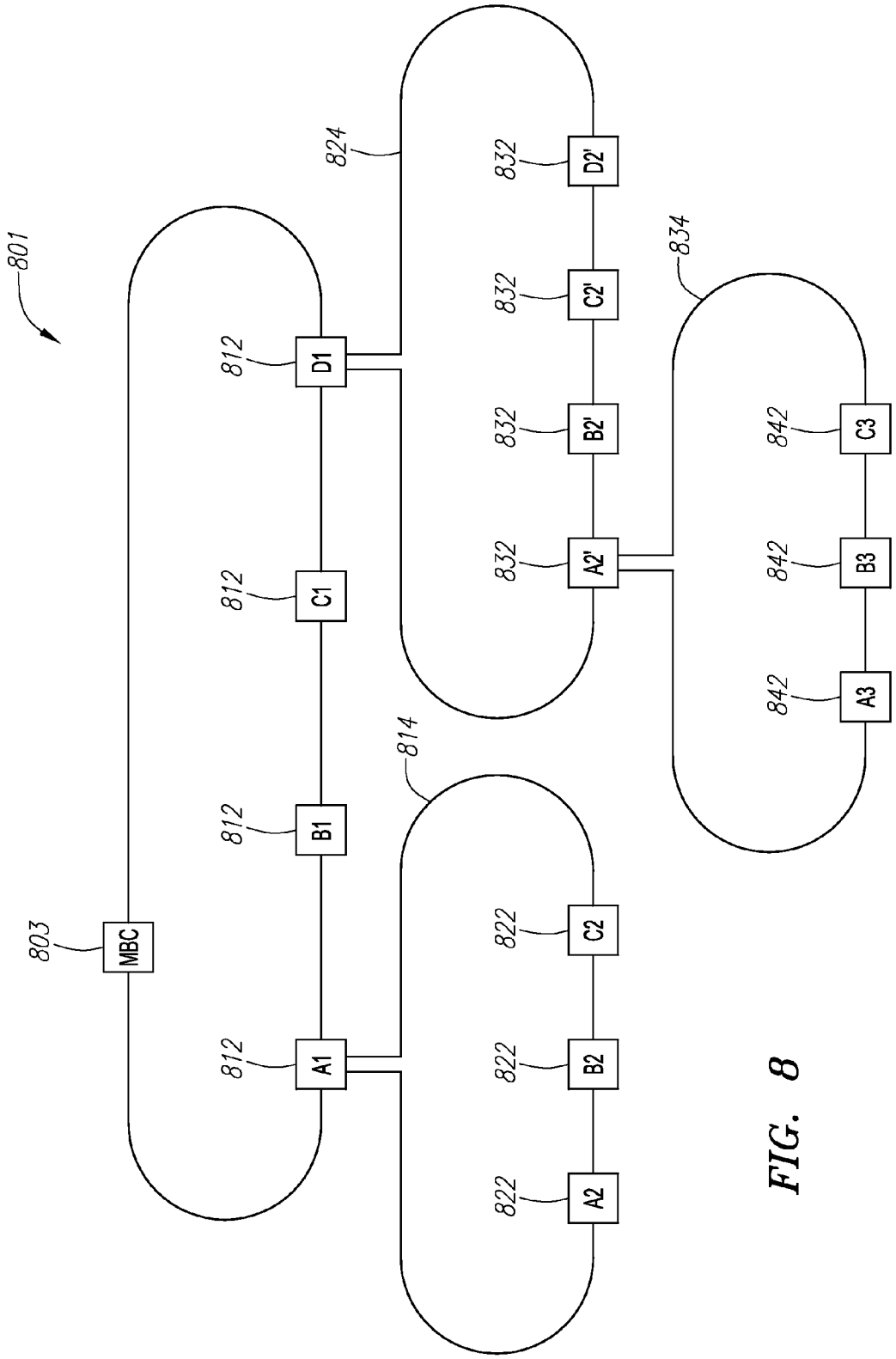
801
803
MBC
812
A1
812
B1
812
C1
812
D1
814
822
A2
822
B2
822
C2
824
832
A2'
832
B2'
832
C2'
832
D2'
834
842
A3
842
B3
842
C3

FIG. 8

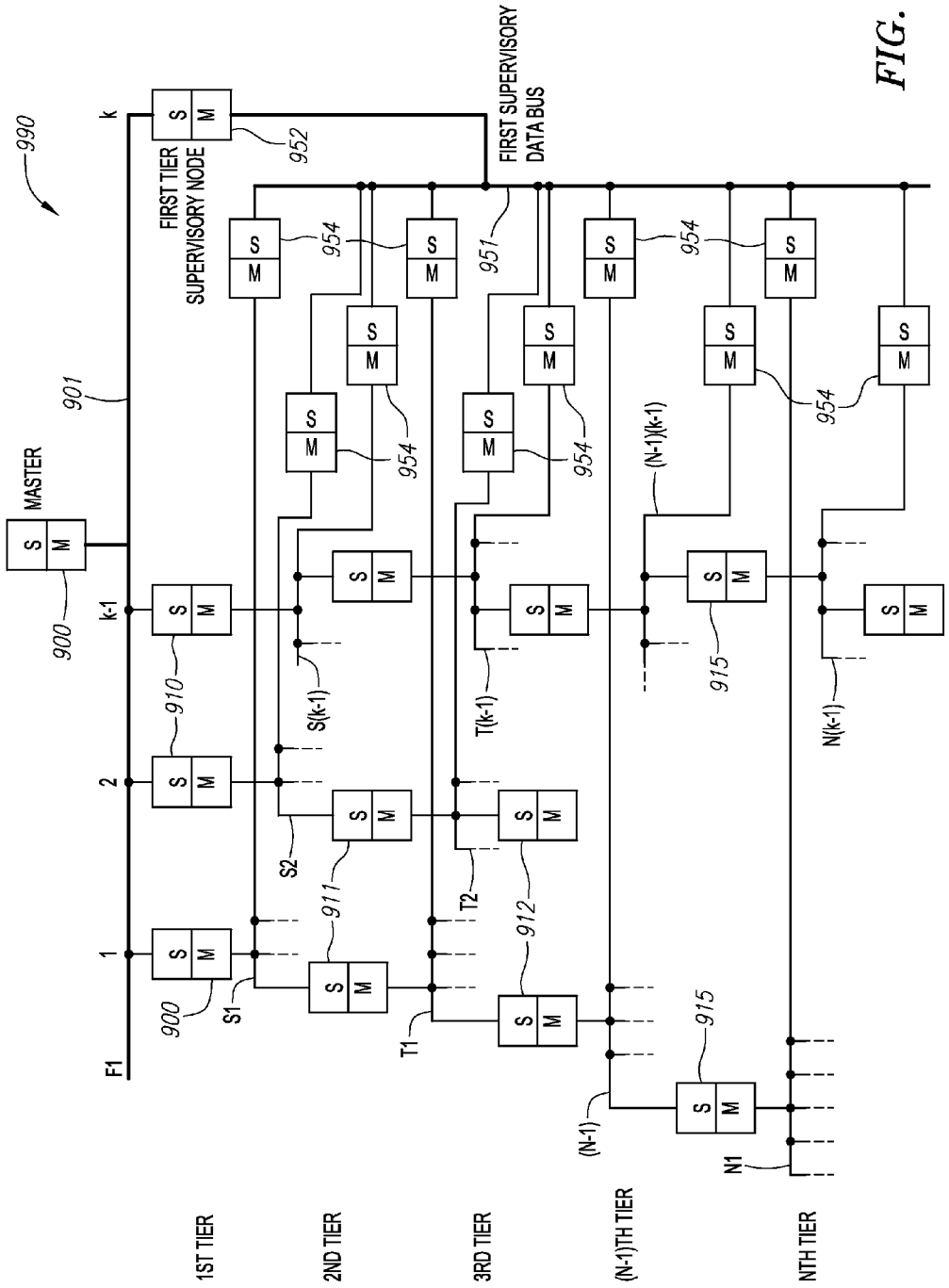
990
MASTER
900
901
FIRST TIER SUPERVISORY NODE
952
FIRST SUPERVISORY DATA BUS
951
954
910
911
912
915
S1
S2
T1
T2
S(k-1)
T(k-1)
(N-1)(k-1)
N(k-1)
(N-1)
N1
F1
1
2
k-1
k
1ST TIER
2ND TIER
3RD TIER
(N-1)TH TIER
NTH TIER

FIG. 9

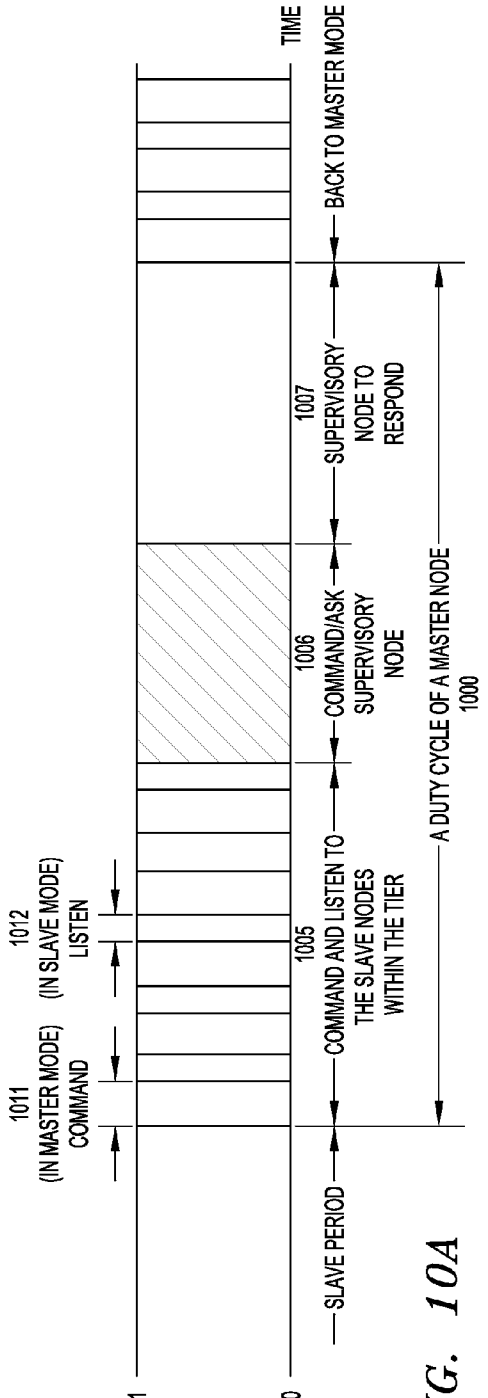

FIG. 10A

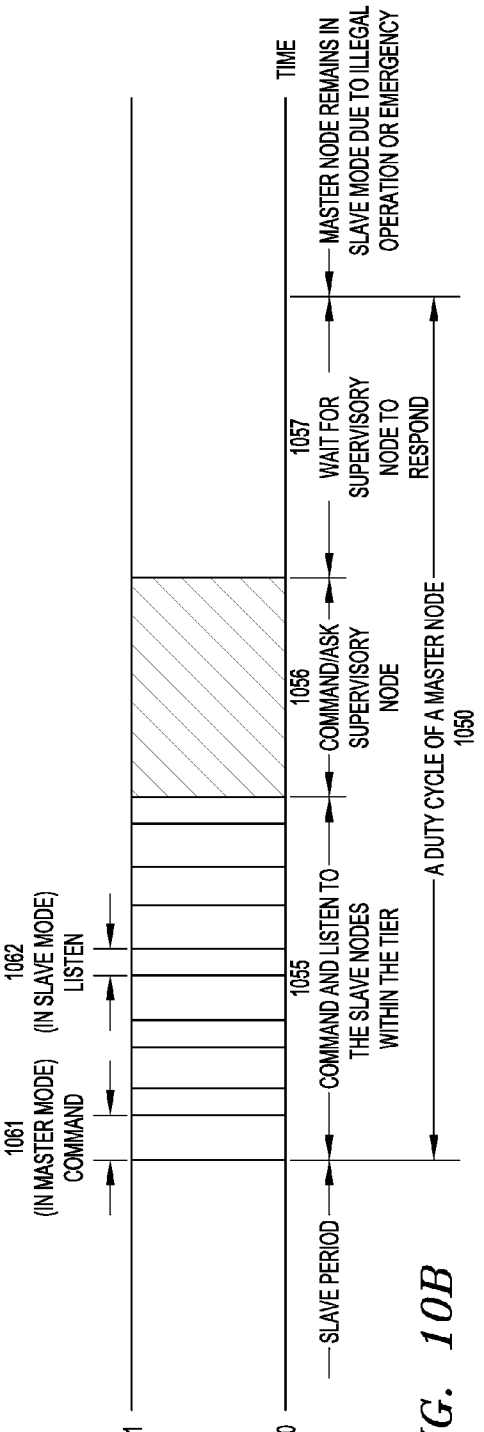

FIG. 10B

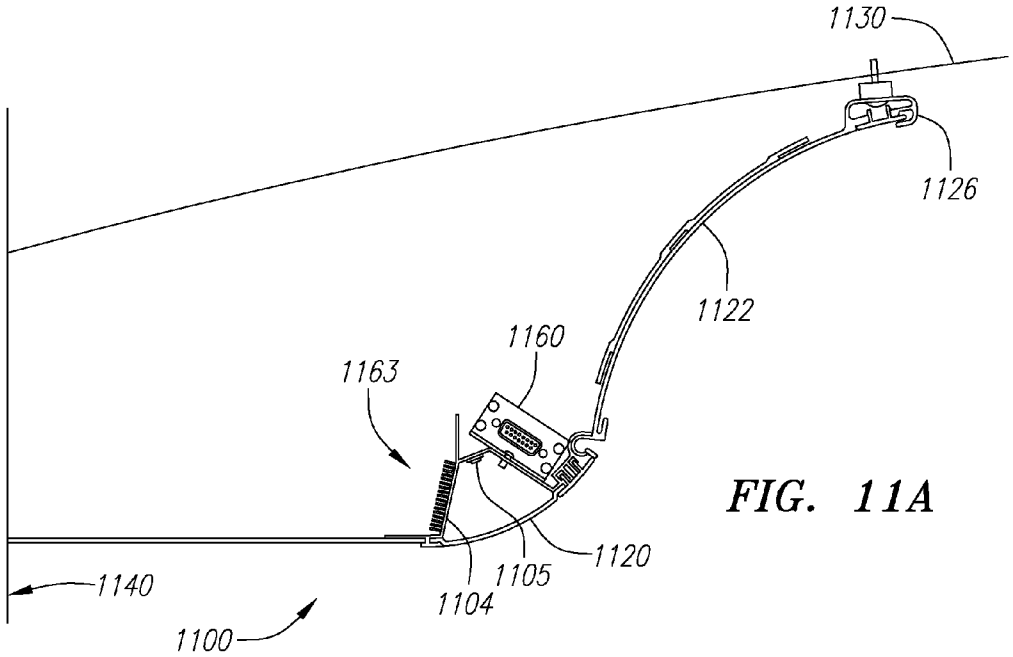

FIG. 11A

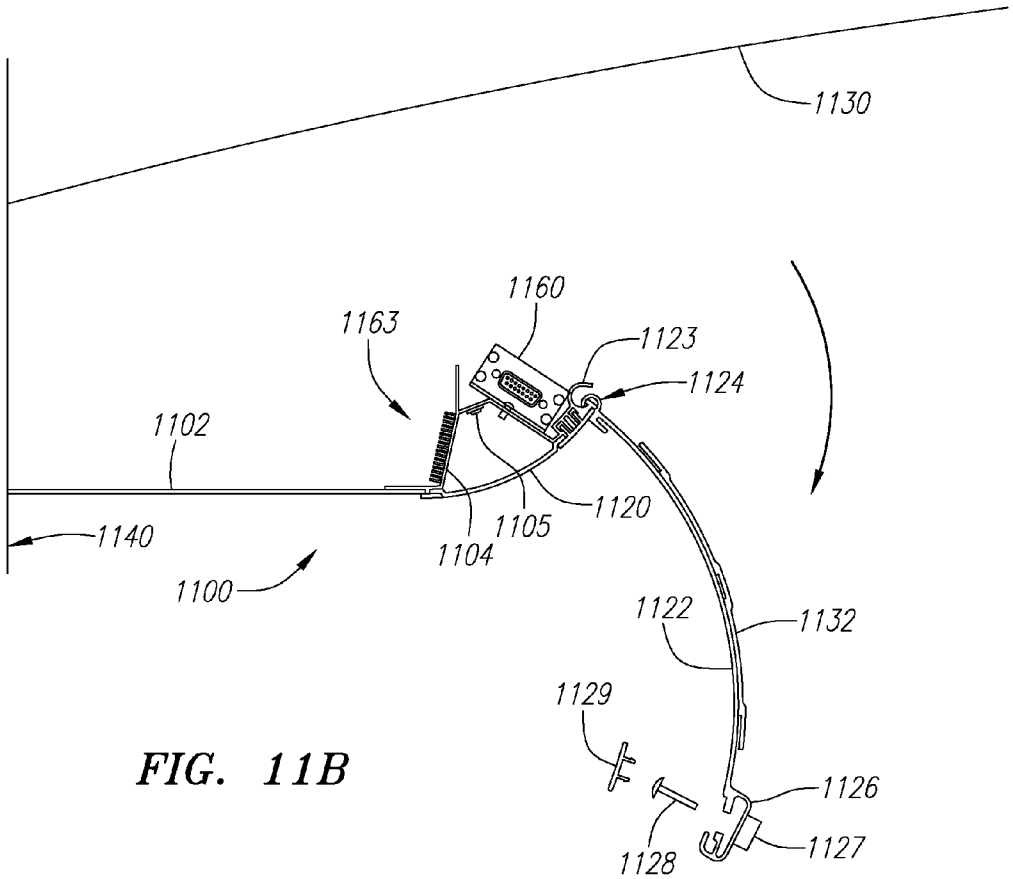

FIG. 11B

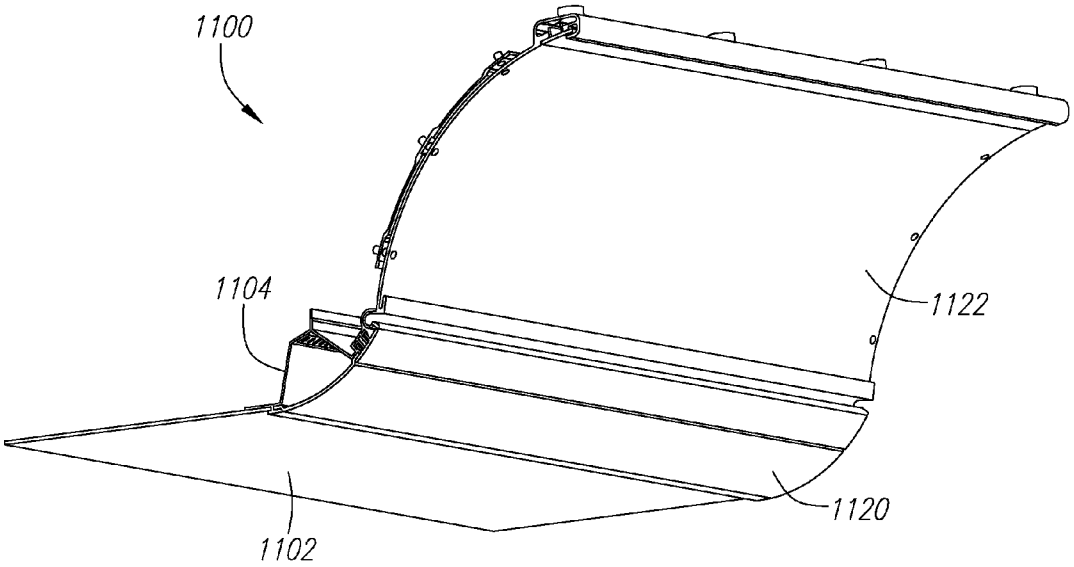

FIG. 11C

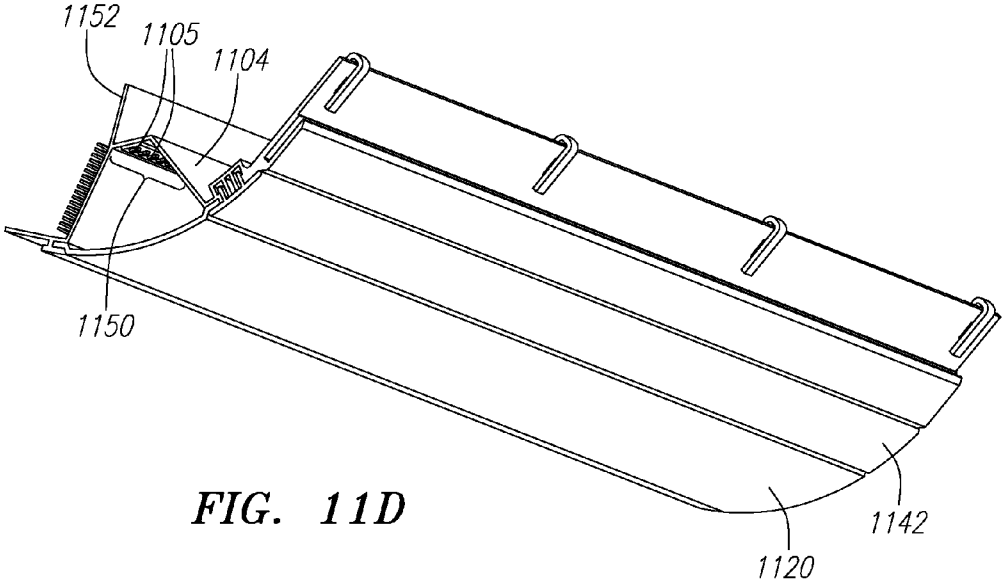

FIG. 11D

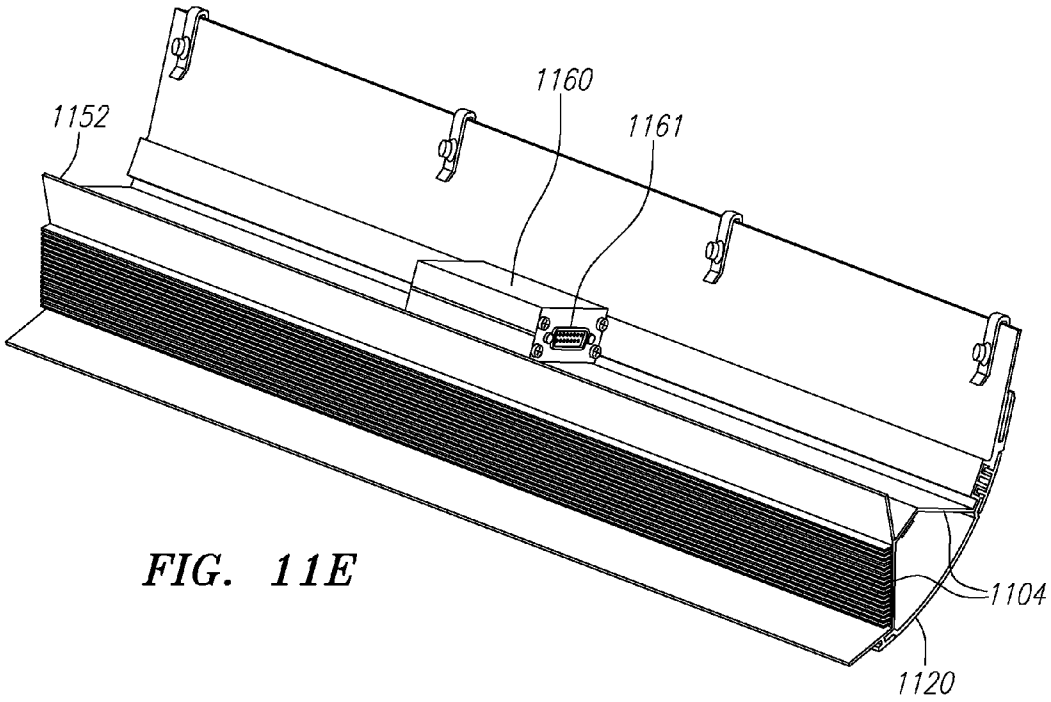

FIG. 11E

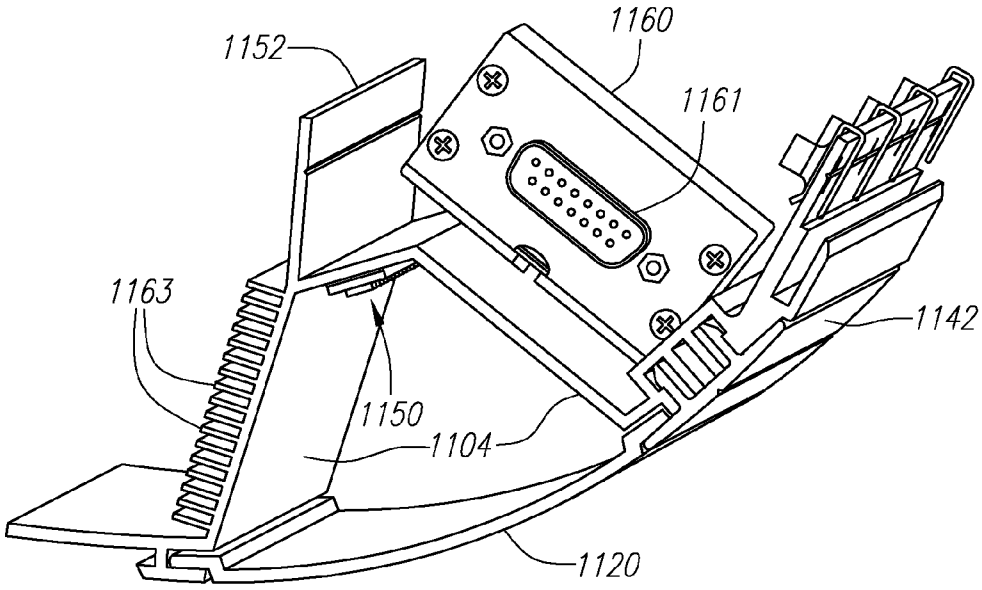

FIG. 11F

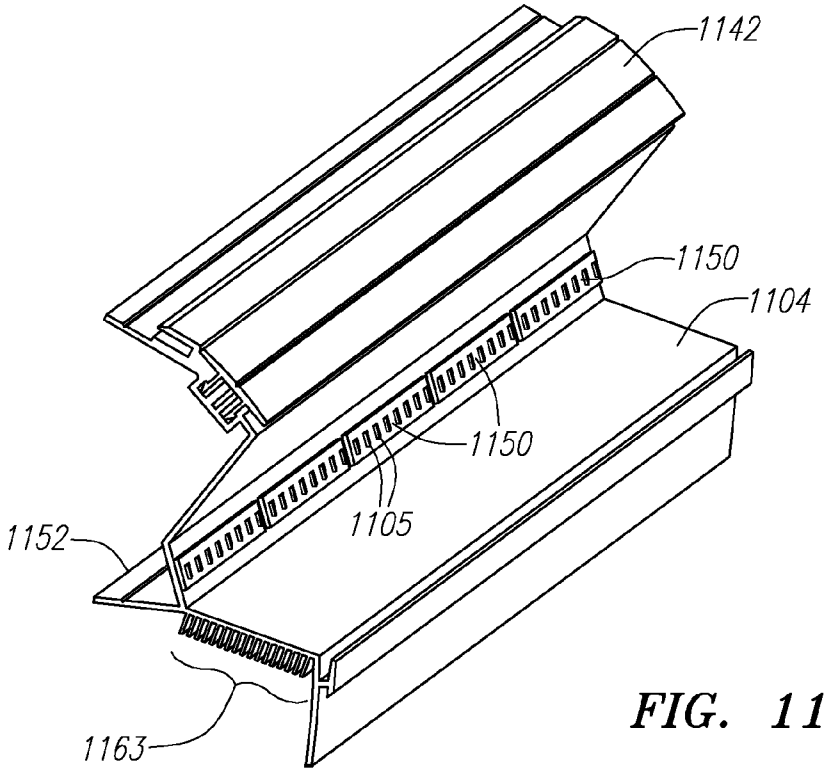

FIG. 11G

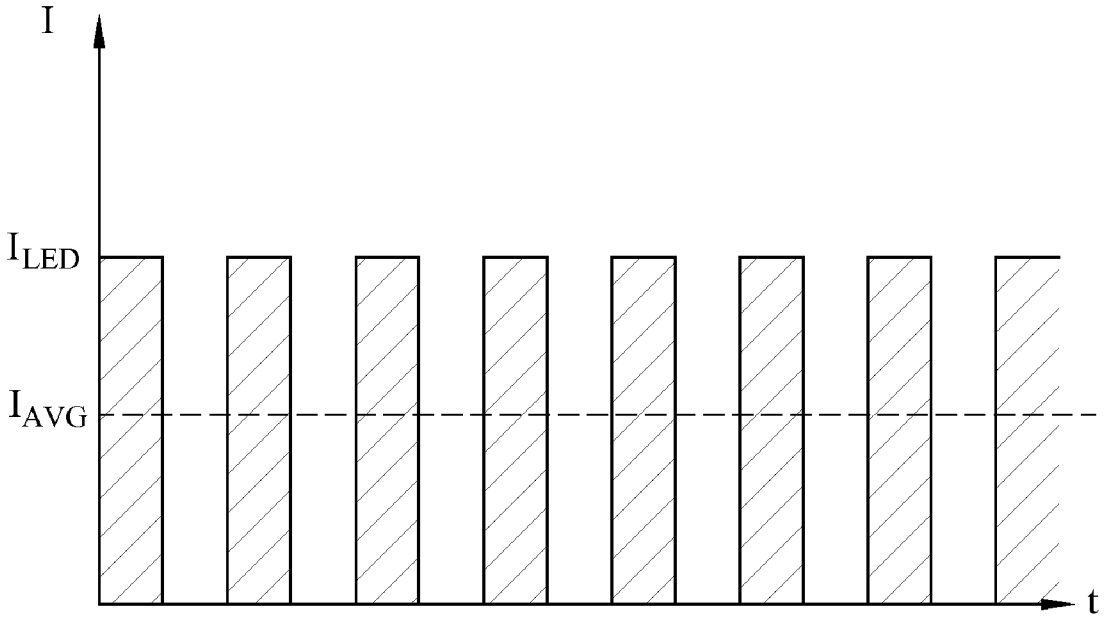

FIG. 12

Time (month)	LED current (mA)	PWM duty (%)
0	150.5	43
3	157.5	45
6	164.5	47
9	171.5	49
12	178.5	51
15	185.5	53
18	192.5	55
21	199.5	57
24	206.5	59
30	213.5	61
36	220.5	63
42	227.5	65
48	234.5	67
54	241.5	69
60	248.5	71
66	255.5	73
72	262.5	75
78	269.5	77
84	276.5	79
90	283.5	81
96	290.5	83
102	297.5	85
108	304.5	87
114	311.5	89
120	318.5	91
126	325.5	93
132	325.5	93
138	325.5	93
144	325.5	93
150	325.5	93

FIG. 13A

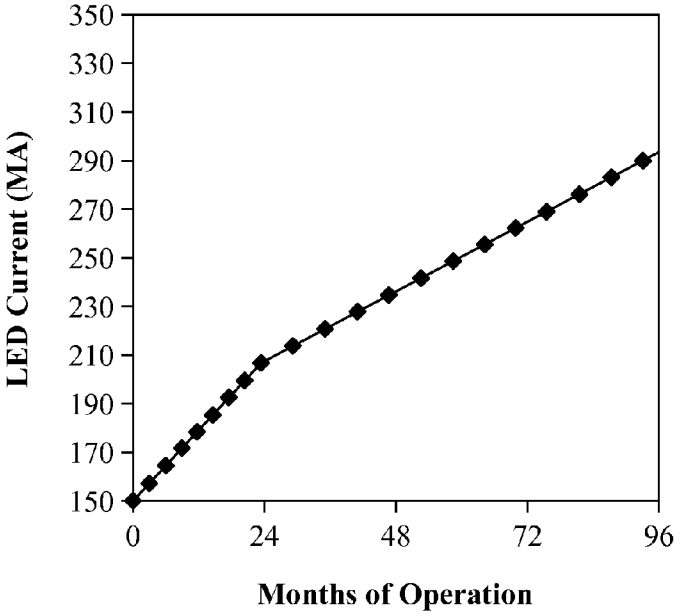

FIG. 13B

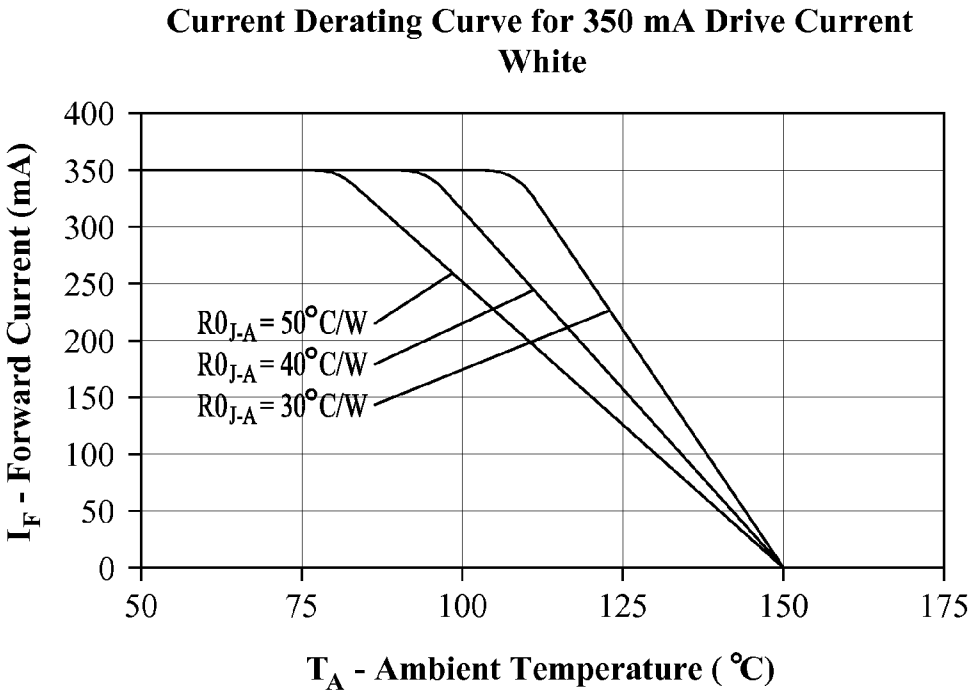

FIG. 14A

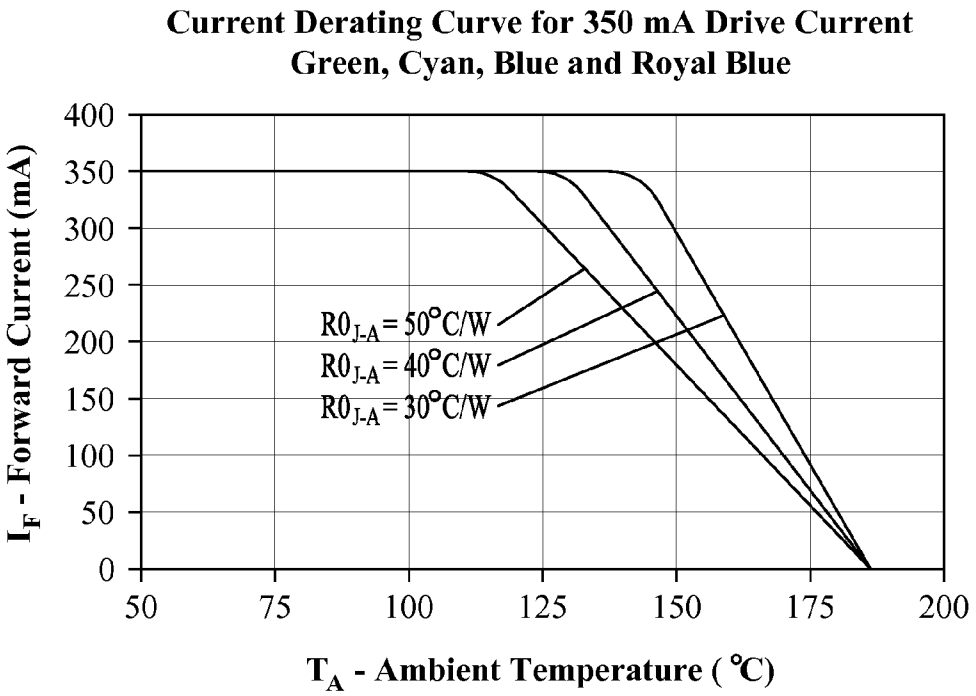

FIG. 14B

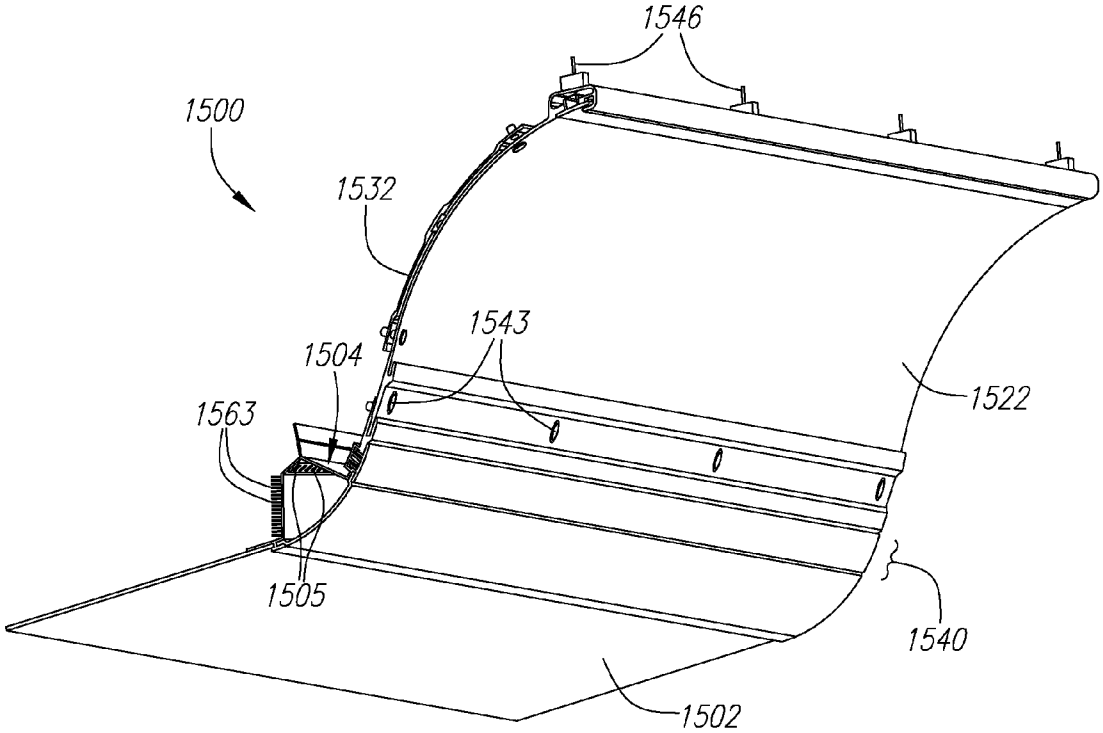

FIG. 15A

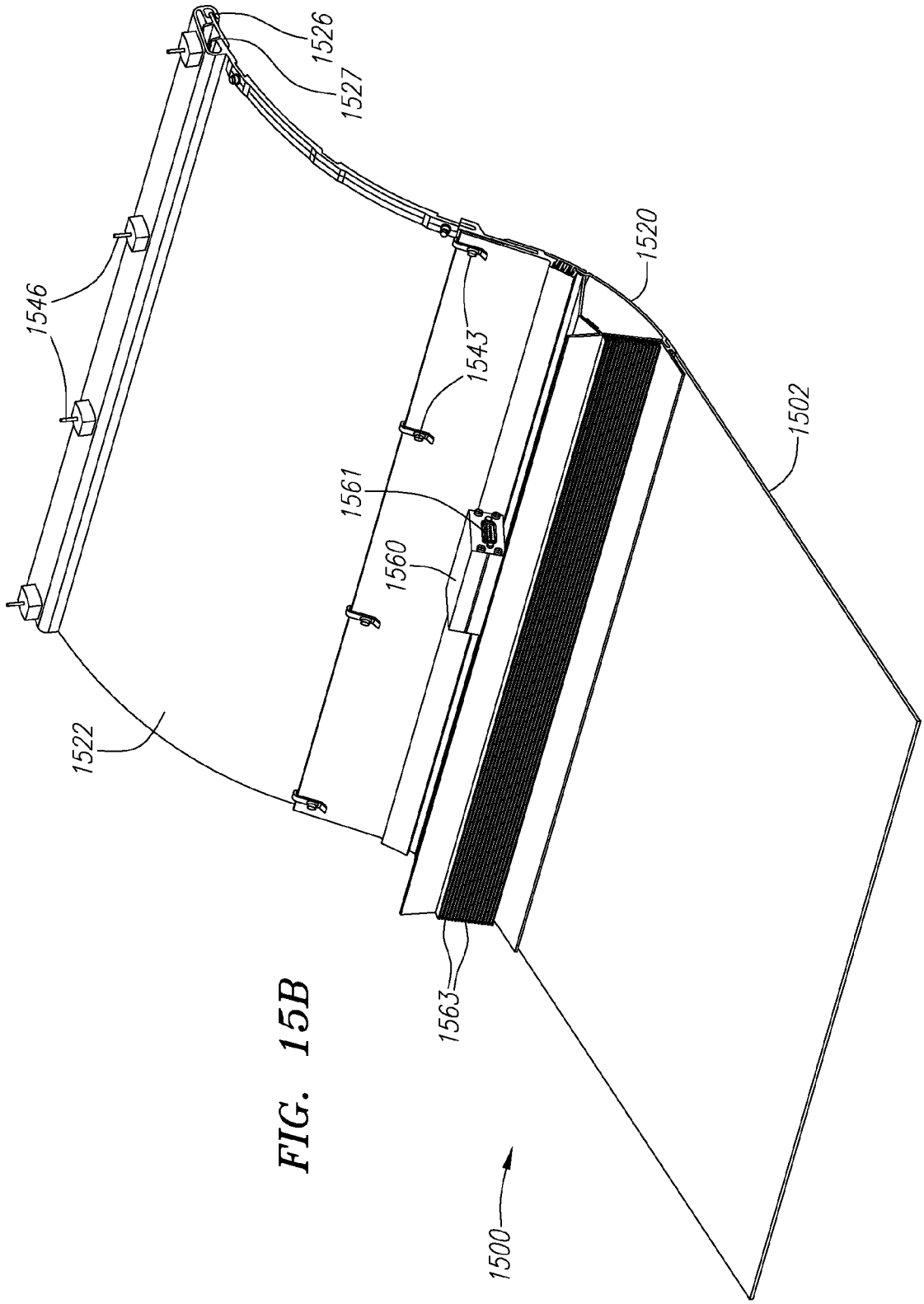

FIG. 15B

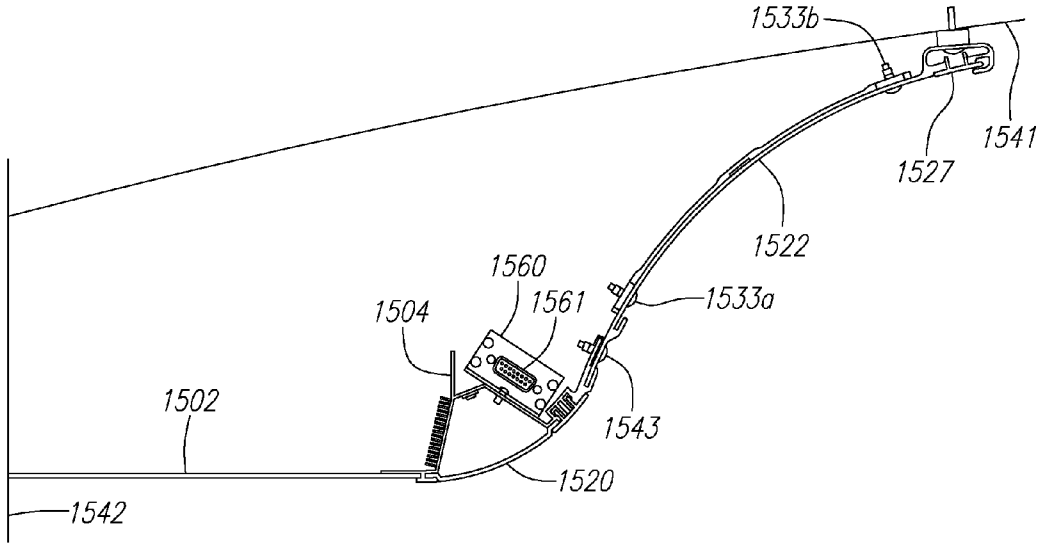

FIG. 15C

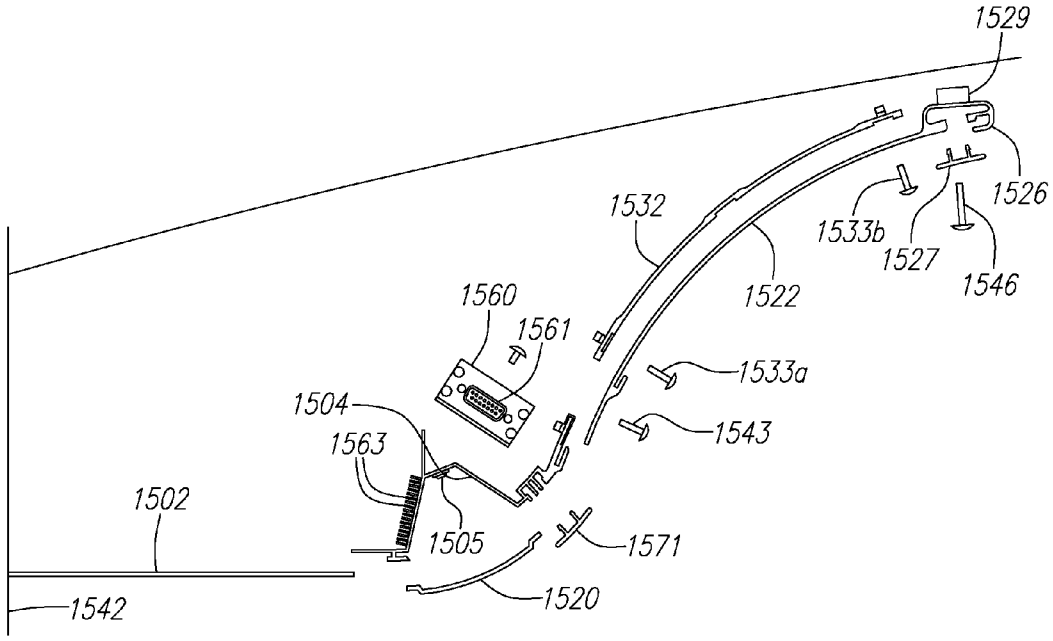

FIG. 15D

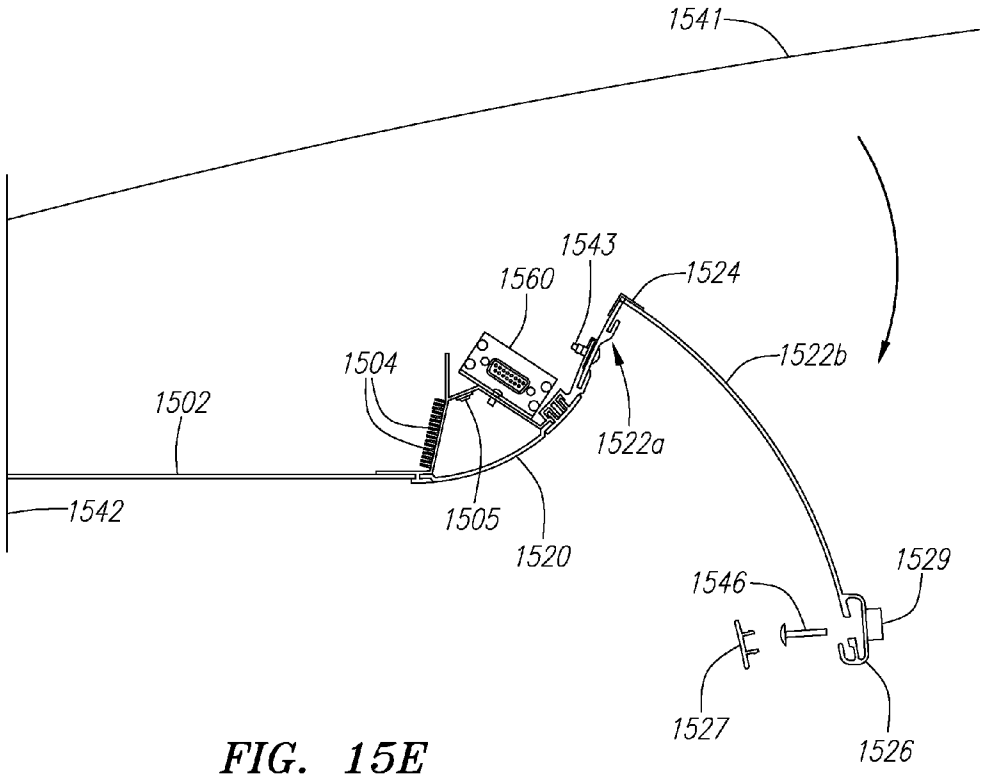
1541
1543
1560
1524
1504
1522b
1502
1522a
1542
1505
1520
1529
1546
1527
1526

FIG. 15E

CONTROL NETWORK FOR LED-BASED LIGHTING SYSTEM IN A TRANSIT VEHICLE

RELATED APPLICATION INFORMATION

[0001] This application is a utility application claiming the benefit of U.S. [Provisional] Application Ser. No. _____ (formerly Ser. No. 11/779,260), filed on Jul. 17, 2007, hereby incorporated by reference as if set forth fully herein.

BACKGROUND OF THE INVENTION

[0002] 1) Field of the Invention

[0003] The field of the present invention generally relates to lighting systems and, more particularly, to control networks for lighting systems used in transit vehicles or conveyances such as buses, lightrail cars, and the like.

[0004] 2) Background

[0005] Transit vehicles and similar conveyances typically rely on fluorescent lighting to provide illumination, in part because of the historical efficiency of such lighting as compared to, e.g., incandescent lighting. However, fluorescent lighting has drawbacks and limitations.

[0006] For example, fluorescent lighting has a relatively short lifetime and a high current draw as compared to some other types of lighting, in particular low power light-emitting diodes (LEDs). In a typical setting, the fluorescent lights receive power from the transit vehicle's battery, which is usually 24 volts, the output of which is "chopped" to provide an alternating current source. The nature of fluorescent lights leads to high electro-magnetic fields, making compatibility with other electrical equipment challenging. Fluorescent lights also often have problems with arcing, which in turn can pose fire dangers or else blow out electrical components and/or cause power ripples. Fluorescent lights are also traditionally wired in a point-to-point fashion, requiring a substantial amount of wiring.

[0007] In addition, fluorescent lighting is not very amenable to flexible control, and can be difficult to dim. For example, if the fluorescent lamp filaments get too cool when attempting to dim the lamp, then the lamp may simply go out. If current continues to flow while the electrodes are at an improper temperature, then severe rapid degradation of the filaments is possible.

[0008] Some efforts have been made to try to incorporate LED lights in transit vehicles, but it is not clear that such efforts have been able to overcome the many disadvantages and limitations of fluorescent lighting.

[0009] It would therefore be advantageous to provide a lighting system for a transit vehicle or conveyance, which overcomes one or more of the disadvantages or limitations of conventional lighting systems. It would further be advantageous to provide such a lighting system which has improved lifetime and power/current consumption, requires less wiring, and/or is more easily controlled. It would also be advantageous to provide such a lighting system which is inexpensive and not overly complex to implement or deploy, and/or has other benefits and advantages not found in conventional transit vehicle lighting systems.

SUMMARY OF THE INVENTION

[0010] The invention is generally directed in one aspect to a novel and versatile lighting system that is particularly well suited for a transit vehicle or similar conveyance, but which may find other uses or applications as well. According to one embodiment as disclosed herein, an LED-based lighting fixture for a transit vehicle comprises a plurality of LEDs for illuminating an area of a transit vehicle, a power regulator receiving an input power supply signal, and a controller for providing a target current command to the power regulator. The controller may adjust the target current based upon temperature measurements received from a temperature sensor, and/or based upon a recorded age of the LEDs. An optical sensor may provide automatic dimming. A reduced number of LEDs may be employed when in an emergency mode.

[0011] In various forms and embodiments, the lighting fixture may be part of an LED-based control network in which a plurality of LED-based lighting fixtures each comprise a plurality of LEDs for illuminating an area of a transit vehicle, a plurality of slave nodes for controlling the LED-based lighting fixtures, and a master node in communication with the slave nodes. A digital communications bus may be provided for communicating among the master node and the slave nodes. The digital communications bus may be combined with a power supply cable, and the master node may be connected to the slave nodes by wiring the combined digital/power cable/bus in a daisy chain fashion from slave node to slave node.

[0012] In other embodiments, the LED-based lighting fixture may include a ceiling panel fixture having a ceiling panel adapted to abut a transit vehicle interior sidewall and an LED lighting mount on which the LEDs are disposed, and a riser panel attached to the ceiling panel fixture and adapted to abut a transit vehicle ceiling or interior top mounting surface. The riser panel may include a locking mechanism for securing the riser panel to the transit vehicle ceiling or interior top mounting surface, and a detachable hinge for releasably attaching to the ceiling panel fixture, whereby the riser panel may be fully removed from and reattached in position by releasing the locking mechanism. Alternatively, the riser panel may include a permanent hinge for attaching the riser panel to the ceiling panel fixture, whereby the riser panel may be rotationally swung open by releasing the locking mechanism.

[0013] Further embodiments, variations and enhancements are also disclosed herein.

BRIEF DESCRIPTION OF THE DRAWINGS

[0014] FIG. **1** is a conceptual diagram showing an example of a lighting control system for a transit vehicle in accordance with one embodiment as disclosed herein.

[0015] FIG. **2**A is a high level architectural diagram of an embodiment of a lighting control system in accordance with the principles illustrated in and/or described with respect to FIG. **1**.

[0016] FIG. **2**B is a diagram of an embodiment in which LED-based lighting fixtures are connected in series, according to one example of a lighting control system constructed in accordance with various principles illustrated in and/or described with respect to FIG. **2**A.

[0017] FIG. **3** is a block diagram of a master node as may be used, for example, in the lighting control system depicted in FIG. **2**A or otherwise.

[0018] FIG. **4** is a block diagram of an LED-based lighting fixture and slave node as may be used, for example, in the lighting control system depicted in FIG. **2**A or otherwise.

[0019] FIG. **5** is an architectural diagram of a master-slave control network for a transit vehicle, illustrating a possible relationship of the lighting control system to other components in the control network.

[0020] FIG. **6** is a block diagram of a network node as may be used within the control network architecture shown in FIG. **5** or otherwise.

[0021] FIG. **7** is a diagram of a hierarchical control network architecture in accordance with another embodiment, and having multiple second-tier buses.

[0022] FIG. **8** is an architectural diagram of another embodiment of a hierarchical control network, having a third-tier bus, as may be used in connection with a lighting system control network as disclosed herein.

[0023] FIG. **9** is an architectural diagram of a hierarchical control network with a matrix architecture providing supervision of mid- and lower-tier levels of the control network, as may be used in connection with a lighting system control network as disclosed herein.

[0024] FIGS. **10**A and **10**B are timing diagrams for communication in a hierarchical control network having a matrix architecture, such as the control network illustrated in FIG. **9**.

[0025] FIGS. **11**A and **11**B are diagrams illustrating cross-sectional views of a lighting panel fixture with LEDs for illumination as may be used in a transit vehicle, while FIGS. **11**C through **11**G are diagrams illustrating oblique views from different angles of the lighting panel fixture or portions thereof illustrated in FIGS. **11**A and **11**B.

[0026] FIG. **12** are graphs illustrating an example of voltage and current waveform characteristics of an array of LEDs controlled by a lighting control system as disclosed herein.

[0027] FIG. **13**A is a chart illustrating an example of LED current relative to age (in months), and FIG. **13**B is a graph illustrating similar information.

[0028] FIGS. **14**A and **14**B are examples of current derating graphs illustrating in general a drop in maximum LED current rating with an increase in forward junction temperature.

[0029] FIGS. **15**A and **15**B are diagrams illustrating, respectively, front and back oblique views of another embodiment of a lighting panel fixture with LEDs for illumination as may be used in a transit vehicle, while FIGS. **15**C and **15**D illustrate cross-sectional side views (the latter being an assembly diagram) of the lighting panel fixture illustrated in FIGS. **15**A and **15**B. FIG. **15**E is a variation having a permanent hinge in the curved riser panel for access behind the lighting panel fixture.

DETAILED DESCRIPTION OF PREFERRED EMBODIMENT(S)

[0030] According to various embodiments as disclosed herein, a lighting fixture and control network for an LED-based lighting system for use in a transit vehicle may comprise, for example, one or more of (i) a plurality of lighting fixtures each having LEDs for illuminating an area of a transit vehicle; (ii) a power regulator for receiving an input power supply signal; (iii) a controller for providing a target current command to the power regulator; (iv) a plurality of slave nodes for controlling the LED-based lighting fixtures; (v) a master node in communication with the slave nodes; (vi) a digital communications bus for communicating among the master node and the slave nodes; (vii) a power supply cable integrated with the digital communications bus, connecting the master node to the slave nodes in a daisy chain fashion; (viii) an optical sensor for detecting ambient light in order to provide automatic dimming of the LEDs; and (ix) an emergency mode in which a reduced number of LEDs are employed. In certain embodiments, the controller may adjust the target current based upon temperature measurements received from a temperature sensor, and/or based upon a recorded age of the LEDs. In other embodiments, the LED-based lighting fixture may include a ceiling panel fixture having a ceiling panel adapted to abut a transit vehicle interior sidewall and an LED lighting mount on which the LEDs are disposed, and a riser panel attached to the ceiling panel fixture and adapted to abut a transit vehicle ceiling or interior top mounting surface. The riser panel may include a locking mechanism for securing the riser panel to the transit vehicle ceiling or interior top mounting surface, and a hinging mechanism (detachable or permanent) for attaching to the ceiling panel fixture, whereby the riser panel may be fully removed from and reattached in position by releasing the locking mechanism or else rotationally swung open by releasing the locking mechanism.

[0031] FIG. **1** is a conceptual diagram of an example of a preferred lighting control system as may be used in connection with a transit vehicle, in accordance with one embodiment as disclosed herein. In FIG. **1**, a preferred lighting control system **100** comprises part of, or interacts with, a vehicle control network **109** that controls various functions and operations of a transit vehicle **149**. The vehicle control network **109**, through various network nodes or other components, may control or monitor aspects of the transit vehicle's operational features such as, e.g., its transmission system, engine sensors or controls, air conditioner, light indicators or displays, front and rear doors, magnetic breakers, kneeling mechanism, wheel chair platform, headlights, tail lights, control switches, instrument panel, internal lighting system, and so on. In one aspect, the lighting control system **100** may comprise a sub-system of the vehicle control network **109**, although in other embodiments the lighting control system **100** may be standalone or independent of the main vehicle control network **109**.

[0032] As further illustrated in FIG. **1**, power may be provided to the vehicle control network **109** and/or lighting control network **100** via an on-board battery **118**, which typically will be rated 24 Volts for a transit vehicle although the actual voltage output may vary over time and under various conditions. The lighting control network **100** in this example comprises a plurality of network nodes including a master node **103** and a series of slave/LED nodes **102**, each of which constitutes or is associated with an LED-based lighting fixture having local electronic control but responsive to the master node **103**. A power/data bus **104** preferably interconnects the series of slave/LED nodes **102** in a daisy-chain fashion. Each of the slave/LED nodes **102** may include a plurality of LEDs **107** arranged on a lighting panel or other fixture to provide illumination for a particular interior region of the transit vehicle **149**.

[0033] FIG. **2**A is a high level architectural diagram of an embodiment of a lighting control system **200** in accordance with the principles illustrated in FIG. **1**, showing additional details thereof. As illustrated in FIG. **2**A, the lighting control system **200** comprises a master node **203** and a series of LED-based lighting fixtures **202**, each of which constitutes or is associated with a slave/LED network node having local control electronics responsive to the master node **203**, similar to the lighting control system **100** of FIG. **1**. Each of the LED-based lighting fixtures **202** in this example comprises a network (slave) node **223** and one or more LED units **224**. Each LED unit **224** comprises one or more LEDs arranged thereon to provide illumination for a particular interior region

of a transit vehicle. The LED-based lighting fixtures **202** are preferably interconnected in series, in a daisy-chain manner, as described with respect to FIG. **1**. A power bus comprising a power supply line **211** from the vehicle battery and a ground line **213** is preferably connected from the master node **203** to each LED-based lighting fixture **202** and slave node **223** thereof, in series. Likewise, a command/data bus **212** may be connected from the master node **203** to each LED-based lighting fixture **202** and slave node **223** thereof, in series. Although other techniques may be used, by connecting the LED-based lighting fixtures in daisy-chain fashion, wiring of the interior lights for the transit vehicle may be advantageously simplified.

[0034] In operation, the master node **203** may communicate with the main vehicle control network (e.g., control network **109** in the example of FIG. **1**) and may respond to commands or queries therefrom, and/or may send alarm signals, interrupts, or status information to the main vehicle control network. The master node **203** may also control the various LED-based lighting fixtures **202**, and slave nodes **223** thereof, through commands or queries transmitted over the command/data bus **212**. The command/data bus **212** may be embodied as any suitable bus, and may, for example, be serial or parallel in nature, and may be electrical or optical in nature (e.g., using fiber optics). The master node **203** and slave nodes **223** may be arranged in a linear configuration, or else may be arranged in a loop configuration as explained hereinafter for increased reliability and redundancy. Commands or inquiries may be transmitted from the master node **203** over the command/data bus **212** to the first slave node **223** (Slave Node **1**), which then propagates the commands or inquiries over the command/data bus **212** to the next slave node **223** (Slave Node **2**) in the chain, and so on in sequence until the command or inquiry reaches the last slave node **223** (Slave Node N) if necessary. Commands or inquiries need not be propagated if the targeted slave node **223** receives the command or inquiry and responds thereto; however, it may nonetheless be desirable in some configurations to propagate all commands and inquiries, or certain subsets thereof, to all of the slave nodes **223** in the lighting control network **200**.

[0035] Via commands or inquiries conveyed over the command/data bus **212**, the master node **203** may control, individually or by group, the individual LED units **224** of each LED-based lighting fixture **202**. The master node **203** may, for example, command certain LED units **224** to turn on, turn off, dim by a specified amount, intensify by a specified amount, flash (e.g., in emergency situations), or activate according to a predetermined pattern. Dimming may be accomplished by pulse width modulation, thereby reducing the percentage of time that the LEDs are turned on, and/or by turning off selected LEDs and thereby reducing the number of "on" LEDs at a given time. Likewise, the intensity of light may be increased by increasing the percentage of time that the LEDs are turned on using pulse width modulation, and/or by turning on additional selected LEDs which are initially in an "off" state. The master node **203** may convey commands to the slave nodes **223** at each LED-based lighting fixture **202**, and, in response thereto, the slave nodes **223** may be responsible for locally controlling the electronics at each LED-based lighting fixture **202** in order to implement the command received from the master node **203**.

[0036] FIG. **2**B is a diagram of an embodiment in which LED-based lighting fixtures **252** are connected in series, according to one example of a lighting control system **250** constructed in accordance with various principles illustrated in and/or described with respect to FIG. **2**A. In FIG. **2**B, the lighting control system **250** includes a plurality of LED-based lighting fixtures **252**, each of which includes, among other things, one or more LED units **274**, as may be embodied according to the various examples described herein. The LED units **274** typically comprise a plurality of LEDs for illumination of the interior of a transit vehicle. The LED-based lighting fixtures **252** are illustrated in FIG. **2**B as physically connected in series. They may, for example, be physically installed along the ceiling region above the seating area of a transit vehicle, thereby providing continuous illumination for occupants in the interior of the transit vehicle. Each of the LED-based lighting fixtures **252** also preferably includes a slave node **273** as described with respect to FIG. **2**A and other embodiments elsewhere herein. The slave nodes **273** of the LED-based lighting fixtures **252** may, as illustrated in FIG. **2**B, be connected by a series of cables **279**, thereby simplifying wiring requirements of the transit vehicle lighting system. Complementary mating connectors (e.g., female and male connectors **281**, **282**) may be used to secure the cables **279** to one another between the various slave nodes **273**. Each cable **279** may carry a plurality of electrical signals including, e.g., battery power and ground signals (**211** and **213** in FIG. **2**A) and one or more command/data bus signals (**212** in FIG. **2**A).

[0037] As generally described previously, the slave nodes **273** provide local control of the various LED units **274** on a particular LED-based lighting fixture **252**. The slave nodes **273** are accordingly coupled to the various LED units **274** via one or more control and/or power signals **285**. A preferred set of particular signals that are included among the control and/or power signals **285** is described with respect to FIG. **4** herein, although not all the signals in FIG. **4** may be necessary in various embodiments, or else additional electrical signals may be provided if additional functions are included.

[0038] As noted, one potential benefit of the arrangement in FIG. **2**B is the simplification of wiring needed for the illumination system in a transit vehicle. Such an arrangement dispenses with the need for individual power cables being separately routed from the battery source to each lighting fixture (as is typically done with fluorescent lighting fixtures), and also, by virtue of using LEDs, dispenses with the need for ballasts for each of the lighting fixtures. The arrangement in FIG. **2**B therefore uses less wiring, and consequently can be less expensive and more lightweight. Use of serial cables **279** also makes wiring of power and control signals relatively simple and easy to install and maintain.

[0039] FIG. **3** is a block diagram of a preferred master node **300** as may be used, for example, in the lighting control system depicted in FIG. **2**A. In the example illustrated in FIG. **3**, the master node **300** is connected to the power supply line **211** and ground line (shown as separate input and output ground lines **213***a* and **213***b*, collectively referred to as ground line **213**). The master node **300** preferably includes a voltage regulator **308** which receives a power signal from the power supply line **211**, and converts the (typically 24 Volt) input power signal to a stable low voltage power output signal for digital electronics and other components within the master node **300**. The voltage regulator **308** outputs appropriate internal power supply signals **328**, **329** and **330** to other components of the master node **300**.

[0040] The master node **300** also preferably includes a micro-controller **320** for performing the supervisory control and logic functions of the lighting control system. Although

not expressly shown in FIG. **3**, the micro-controller **320** would be understood to include appropriate memory (e.g., RAM and/or ROM), interfaces, and drivers, as well as logic circuitry including, for example, a microprocessor, FPGA, or other programmable logic. A main network command line driver **305** interfaces with the main vehicle control network via a network communication bus **215**. Likewise, a lighting control system command line driver **315** interfaces with other lighting control system network components via a data/command bus **212**, which is interconnected to downstream LED-based lighting fixtures in a manner described with respect to FIG. **2**A.

[0041] In operation, the micro-controller **320** communicates with the main vehicle control network over the network communication bus **215** and may, for example, send periodic status updates or alarm signals to the main vehicle control network, or else respond to various commands or inquiries received from the main vehicle control network. The micro-controller **320** also is responsible for communicating with the slave nodes **223** of the LED-based lighting fixtures **202** via commands or inquiries sent over the data/command bus **212**, and may also, for example, receive periodic status updates or alarm signals sent by the slave nodes **223**. The master node, under control of micro-controller **320**, may communicate with the slave nodes according to, e.g., a polling scheme whereby the slave nodes **223** are periodically queried for status information or other data.

[0042] FIG. **4** is a block diagram of a preferred LED-based lighting fixture **400**, including a slave node **423**, as may be used, for example, in the lighting control system depicted in FIG. **2**A. In the example illustrated in FIG. **4**, the LED-based lighting fixture **400** is conceptually divided into a slave node **423**, which forms a network node of the lighting control network, and one or more LED units or modules **424** as generally described previously with respect to FIG. **2**A. The slave node **423** of the LED-based lighting fixture **400** is connected to an incoming power supply line **411***a* and ground line **413***a* received from an upstream LED-based lighting fixture **400** in the daisy chain (as shown in the arrangement of FIG. **2**A), or, if the first fixture in the chain, from the master node **203**. The LED-based lighting fixture **400** preferably includes a voltage boost regulator **408** which receives a power signal from the power supply line **411***a*, nominally at 24 Volts for a typical transit vehicle (although the actual voltage may swing significantly), and converts the input power signal to both a stable low voltage power output signal for digital electronics and other components within the slave node **423**, and a regulated boosted voltage level for the LEDs on the various LED units **424**. The voltage regulator **408** outputs appropriate internal power supply signals (not shown) to other components of the slave node **223**, such as micro-controller **420** and any other components requiring a low voltage source.

[0043] The micro-controller **420** performs the local control and logic functions required by the lighting control system for causing the LEDs of the LED units **424** to turn on and off, dim, flash if necessary, and so on. Although not expressly shown in FIG. **4**, the micro-controller **420** would be understood to include appropriate memory (e.g., RAM and/or ROM), interfaces, and drivers, as well as logic circuitry including, for example, a microprocessor, FPGA, or other programmable logic. The microcontroller **420** receives commands or inquiries over a data/command bus **412***a* from an upstream slave node **423** or the master node **203**, and also propagates commands and inquiries as necessary to downstream slave nodes **223** via a continued segment of the data/command bus **412***b*. Although not expressly shown in FIG. **4**, the slave node **423** would be understood to include command line drivers for sending appropriate data or command signals over the data/command bus **412***a*, **412***b*.

[0044] The LED unit **424** preferably includes a temperature sensor **430** and optionally an optical sensor **432**, the purpose of which will be described in more detail hereinafter. The temperature sensor **430** and optical sensor **432** are preferably coupled to the micro-controller **420**. The micro-controller **420** may be provided with access to one or more lifetime counters **429**, which store an indication of the age of the LEDs of the LED units **424** and, in certain embodiments, may affect the amount of current provided to the LEDs as further described herein.

[0045] The number of LED units or modules **424** of the LED-based lighting fixture **400** may vary depending upon architectural needs. As one example, the LED-based lighting fixture **400** may include five LED units or modules **424** each having, e.g., eight LEDs, for a total of 40 LEDs on a single LED-based lighting fixture **400**. LED protection circuits **443** may be provided in parallel with each of the LEDs **442**, as known in the art, so that failure of a single LED will not necessarily impede the performance of the remaining LEDs **442**. The LED units **424** are configured in parallel. For a configuration having eight LEDs **442** per LED unit **424**, the voltage boost regulator circuitry **408** would provide an output **435** of approximately 35 Volts, which some variation depending upon the current draw and operational temperature of the LEDs **442**. The LEDs **442** are preferably white in color temperature and have relatively high output. In one embodiment, the LEDs **442** are Luxeon K2 emitters available from Philips Lumileds Lighting Company.

[0046] In addition to communicating with upstream or downstream nodes of the LED control network, the micro-controller **420** is also preferably configured to control the local electronics to provide the LED units **424** with a regulated current appropriate to the age of the LEDs **442**, ambient conditions, and incoming control commands (such as dimming commands). The micro-controller **420** may receive commands from the master node **203** and, based thereon, set or modify target parameters utilized by the current control circuitry **421** and/or voltage boost regulator circuitry **408**. For example, the micro-controller **420** may receive a command to dim the lighting by a specified amount, and in response thereto, the micro-controller **420** would lower or adjust the target parameters utilized by the current control circuitry **421** and/or voltage boost regulator circuitry **408** accordingly. In a preferred embodiment, each LED unit **424** can be separately controlled and thus individually turned on/off or dimmed.

[0047] While a variety of factors or conditions may cause the LED output to vary over time, the overall output of the LED fixtures may need to meet the requirements set for mass transit vehicles regardless of ambient conditions or other variable factors. A typical mass transit vehicle standard might require, for example, 15 foot-candles of illumination over each bus seat, and 10 foot-candles of illumination in the bus aisles. The variable nature of LEDs can make it challenging to meet the minimum brightness standards. The circuitry used for LED-based lighting fixture **400** may be particularly advantageous in this regard.

[0048] In one embodiment, the current control circuitry **421**, by itself or under control of the micro-controller **420**,

controls the amount of LED current based upon factors including the operational temperature of the LEDs **442** and the age of the LEDs **442**. The lifetime counter(s) **429** may be referenced to adjust the duty cycle based on the age of the LEDs **442**. The age of the LEDs **442** may be stored in one or more lifetime counters **429** and continuously updated based on the micro-controller's internal clock or date stamp. For example, lifetime counter(s) **429** may store a numeric value indicating the age of the LEDs **442** in terms of months of operation. The numeric value may be initialized to zero when the LED units **424** are installed or replaced, and gradually will be incremented over time based upon the internal clock or date stamp of the micro-controller **420**. In general, the older the LEDs **442**, the higher the LED current that may be necessary to achieve the same level of brightness. Therefore, the micro-controller **420** may increase the target current value **422** provided to the current control circuitry **421** over time as the LEDs age. A chart depicting an example of how the LED current may be increased over time is illustrated in FIG. **13**A. In this example, each additional three months of LED age would cause the amount of necessary current to increase by the specified amount. A diagram showing a portion of this same information in graphical form is shown in FIG. **13**B. The micro-controller **420** preferably stores information representing a chart similar to FIG. **13**A or **13**B (in the form of, e.g., an internal table) so that the target current **422** can be readily adjusted in response to the recorded age of the LEDs **442** as reflected by the numeric value stored in the lifetime counters **429**. The chart in FIG. **13**A also illustrates the pulse width modulation duty cycle (in terms of percentage) that may be used to achieve the specified LED current for each entry. Thus, the current control circuitry **421** in this example may be configured to start with relatively low PWM duty cycle (e.g., 43%) when the LEDs **442** are new, and gradually increase the duty cycle over lifetime of LEDs **442** to maximum duty cycle of, e.g., 93% at 150 months.

[0049] The operational temperature of the LEDs **442** may be periodically or continuously monitored using temperature sensor **430**, and this information may also be provided to micro-controller **420**. Micro-controller **420** may then determine a target current setting for current control circuitry **421** based on predefined temperature/current derating information stored in local memory accessible to the micro-controller **420**. Examples of current derating curves showing the maximum forward LED current versus operational temperature are illustrated in FIGS. **14**A and **14**B, for white and colored LEDs respectively. Generally, the higher the junction temperature of the LEDs **442**, the lower the maximum safe current setting. If the maximum safe current setting is exceeded, the expected lifetime of LEDs **442** can be seriously affected. Information describing the applicable current derating curve for LEDs **442** may be stored in local memory and utilized by micro-controller **420** to determine the maximum current setting for LEDs **442** to be applied by current control circuitry **421**. In general, so long as the LED junction temperature is below the maximum permissible level, no temperature adjustment will be necessary, but as the maximum permissible temperature is exceeded the current control circuitry **421** will limit the LED target current level **422**.

[0050] In alternative embodiments, current control circuitry **421** directly utilizes the values from the temperature sensor **430** and/or lifetime counters **429**, without the need for the micro-controller **420** as an intermediary.

[0051] The current control circuitry **421** outputs a control signal to the voltage boost regulator circuitry **408**, whereby the boosted or regulated voltage output **435** is applied to the LED arrays **441** of LED units **424**. As the temperature of the LEDs **442** increases, the current control circuitry **421** adjusts the current setting so as to avoid going above the maximum safe current limit, as described above. FIG. **12** illustrates an example of a current waveform characteristic for the LED arrays **441**. As shown in FIG. **12**, while the regulated voltage from voltage boost regulator circuitry **408** may vary over time, the LED current is pulse width modulated, and duty cycle set, according to the target current level as set by the current control circuitry **421**. The LED current level stays relatively constant across pulses. As the LED temperature increases, the current level is decreased, under management of the current control circuitry **421**, in accordance with a characteristic such as reflected in the chart of FIG. **14**A. The current control circuitry **421** preferably monitors the LED current through a current sense signal **436** (which preferably senses the peak current level), in order to keep the current stable despite possible fluctuations in the regulated voltage level. The peak current value and duty cycle information allow the area of graph in FIG. **12** to be determined, which in turn allows determination of the average current. The average current may then be compared to the target current level **422** to maintain the desired current level and adjust the duty cycle as necessary. The current control circuitry **421** may implement a hard current limit, such as 350 milliamps for example, which will depend on the particular LED specifications.

[0052] In one aspect, temperature feedback is used (via temperature sensor **430**) in order to adjust the LED current if necessary via current control circuitry **421**, in a manner which can advantageously extend the lifetime of the LEDs by minimizing the risk of over-current conditions. Other control information or parameters, such as the measured LED current level, LED age (stored in counter(s) **429**), and state of optical sensor **432** may also be used to affect the LED current, by altering the duty cycle provided by current control circuitry **421**.

[0053] In some embodiments, a single temperature sensor **430** may be used for all of the LED units **424**. In such a case, the temperature measured from one LED unit **424** is deemed to be an accurate estimate of the temperature on the other LED units **424**. In other embodiments, a temperature sensor **430** may be provided for each LED unit **424**.

[0054] In some embodiments, the micro-controller **420** provides a range of capabilities and useful features relating to the LED-based lighting fixture **400**. For example, the micro-controller **420** may respond to commands from the master node **203** to shut off all or selected ones of the LED units **424**. A master light shutoff command may also be sent from the master node **203** instructing all LED/slave nodes to turn off. The micro-controller **420** may also respond to commands from the master node **203** to dim the LEDs **442** on all or selected ones of the LED units **424**, in which case the micro-controller **420** may instruct the current control circuitry **421** to reduce the PWM duty cycle for the affected LED units **424** by an appropriate amount. This feature may be useful, for example, to provide driver-controlled manually adjustable dimming of the lights in the transit vehicle. The micro-controller **420** may also be operative to receive an indication of the ambient light from an optical sensor **432**, and adjust the power of the LEDs **442** in response thereto, thereby providing an auto-brightness function. For example, the micro-control-

ler **420** may have a "day" mode and "night" mode, with the LEDs **442** being set to brighter (i.e., higher duty cycle) in the "night" mode. The micro-controller **420** may store a threshold value, against which the measured ambient light is compared in order to determine which brightness mode should be applied. More than two possible brightness settings responsive to the optical sensor **432** may also be provided. By reducing the brightness of the LEDs **442** when full brightness is not needed, the lifetime of the LEDs **442** may be usefully enhanced. Only a single optical sensor **432** may be needed per transit vehicle; however, more than one optical sensor **432** may be used (for redundancy) and/or at least one optical sensor **432** may be provided for LED-based lighting fixture **400**.

[0055] The micro-controller **420** may also provide an overheated warning message or indication based on the temperature detected by temperature sensor **430**. A special overheat indicator (which may be a colored LED located on driver's control panel or display, or locally near the LED-based lighting fixture **400**) may be configured to light up or blink if the LEDs **442** overheat.

[0056] The LED-based lighting fixture **400** may also usefully provide an emergency exit lighting function. In case of an emergency, the LED-based lighting fixture **400** may be configured, under control of micro-controller **420**, to automatically light up to provide passengers with a visual view and guide them to the nearest exit. A backup power supply (e.g., rechargeable battery) is preferably included to provide emergency power to the LEDs **442** in this situation. Also, a reduced number of LEDs **442** can be activated in an emergency situation, so as to minimize the size and rating requirements of the backup power supply. For example, half or fewer of the LEDs **442** could be activated in an emergency situation.

[0057] The LED-based lighting fixture **400** may also have a self diagnostics indicator, which shows if a malfunction has occurred on an LED unit **424** or elsewhere in the LED-based lighting fixture **400**. In case of a malfunction, a diagnostics message with the details of the failure may be logged to the system, i.e., sent to the master node **203**. Customers can thereafter access the diagnostics by downloading the information from the master node **203**.

[0058] Additional features and functions pertain to a preferred mechanical configuration of an LED lighting fixture in accordance with various embodiments as disclosed herein. One exemplary embodiment is depicted in FIGS. **11**A through **11**G. FIGS. **11**A and **11**B are cross-sectional views of a lighting panel fixture **1100** with LEDs for illumination, as may be used in a transit vehicle, while FIGS. **11**C through **11**G are various oblique views of the lighting panel or portions thereof illustrated in FIGS. **11**A and **11**B. Other embodiments are illustrated in FIGS. **15**A through **15**E, described later herein.

[0059] As illustrated first in FIG. **11**A, the lighting panel fixture **1100** includes a ceiling panel **1102**, an LED lighting mount **1104**, and a riser panel **1122**. The ceiling panel **1102** is generally configured to be positioned directly over the seating in the transit vehicle or similar conveyance, and may abut the interior sidewall **1140** of the transit vehicle. The riser panel **1122** is, in this particular embodiment, curved in approximately a quarter arc shape, and would generally reach to the ceiling **1130** of the transit vehicle or some other top mounting surface. The riser panel **1122** may optionally be configured to allow mounting of advertising prints or similar materials, as is common in the transit industry. In the embodiment illustrated, the riser panel **1122** is detachably hinged, such that it can be pulled down (as illustrated in FIG. **11**B) and temporarily removed to allow access to, e.g., a utility panel or a storage compartment. The LED lighting mount **1104** interconnects the ceiling panel **1102** and the riser panel **1122**, and the LEDs **1105** (shown in side view) may be positioned along the LED lighting mount in an array or other configuration. A removable light permeable cover **1120** may be provided or affixed to the LED lighting mount **1104**, for softening or evening out the illumination from the LEDs **1105**. The light permeable cover **1120** is preferably of sufficient opaqueness to make the LEDs **1105** appear as a single broad light source (as opposed to discrete or individual point light source), without substantially affecting the amount of illumination output from the lighting unit.

[0060] FIGS. **11**A and **11**B also show further details of one possible detachable hinge mechanism for the LED lighting fixture **1100**. In this example, a rounded hinge member **1124** is generally hook-shaped and configured to fit snugly in a half-cylindrical shaped hinge clasp **1123**, as illustrated in FIG. **11**B. A locking member **1126** on the opposite end of the riser panel **1122** preferably provides a means to securely attach to the ceiling or similar top mounting surface when the riser member is in an upright position, as in FIG. **11**A. The locking member **1126** may, for example, have a removable protective cover **1129** (as shown in FIG. **11**B) and a sleeve **1127** for guiding a screw **1128** into a receptor located in the ceiling **1130** of the transit vehicle or other conveyance. A protective panel cover **1132** may be positioned on the back of the riser member **1122** for additional support or reinforcement.

[0061] In one embodiment, the LED lighting mount **1104** is constructed using aluminum extrusion, and operates as a heat sink in addition to providing physical support for the LEDs. To further facilitate heat dissipation, the LED lighting mount **1104** may be configured with metallic heat dissipating fins **1163** on the backside of one or more of its walls. Such heat dissipating fins **1163** may be particularly advantageous where high power LEDs are utilized (typically having operating current from 200 mA to 700 mA or more). The riser panel **1122** may be constructed of a lightweight durable material such as fiberglass, or PVC plastic. Ceiling panel **1102** is preferably formed of a composite material, such as two metal layers sandwiching an insulator material. For example, the composite material may be DIBOND™, a lightweight yet rigid aluminium composite material consisting of a polyethylene core and aluminium cover sheets with a thickness of approximately 0.3 millimeters, coil-coated on front and reverse sides according to ECCA-Standards with a protective film. DIBOND material is commercially available from Alcan Inc. of Montreal, Canada, and is commonly used on transit vehicles. This type of composite material helps prevent condensation when air conditioning is employed.

[0062] The diagrams in FIGS. **11**C through **11**G show additional views and details of the lighting panel fixture **1100** or portions thereof illustrated in FIGS. **11**A and **11**B. FIG. **11**C illustrates an oblique view of the lighting panel fixture **1100**. FIG. **11**D illustrates primarily the LED lighting mount **1104** of the lighting panel fixture **1100**, showing the opaque cover **1120** and various LED modules **1150** each having, in this example, an array of multiple LEDs **1105**. The length of the lighting panel fixture **1100** may vary depending upon lighting needs. In one particular example, the lighting panel fixture **1100** (and hence the LED lighting mount **1104**) is approxi-

mately 60" in length. The lighting panel fixture **1100** may comprise multiple LED units (or "light bars") **1150**, e.g, five LED units **1150**, each 12" long. Each LED unit **1150** in this example has eight LEDs **1105**, arranged in a linear array, as more clearly shown in FIG. **11**G (with light permeable cover **1120** removed). The example in FIG. **11**G shows five LED units **1150** each having eight LEDs **1105**. The LEDs **1105** may be mounted on a metal PCB for convenient modular attachment and/or to help dissipate heat. A removable snap-in lens holder **1142** may be provided to allow rapid removal of the light permeable cover **1120**.

[0063] In a typical transit vehicle (such a passenger bus), six lighting panel fixtures **1100** may be employed on each side of the vehicle. Each LED lighting panel fixture **1100** may have a control module to drive the LEDs **1105** of the multiple LED units **1150**, as described with respect to FIGS. **2**A through **4** previously. The control module may be contained in a control module housing **1160** on the back of the LED lighting mount **1104**, as illustrated in FIGS. **11**E and **11**F. Multiple lighting panel fixtures **1100** may be connected using cables with complementary connectors at either end (similar to FIG. **2**B), in a daisy chain fashion, with a male connector at one end of the lighting panel fixture **1100** and a female connector on the other end. A connector socket **1161** may be provided on each side of the control module housing **1160** to facilitate such interconnection. The complementary connectors may be, e.g., pigtail connectors and may have, in one embodiment, three pins (power, ground, and a serial bus for communication) thereby conveying three electrical signals.

[0064] In the example illustrated in FIGS. **11**A through **11**G, the conduits in which the LED units **1150** reside are open at either end, so that when the LED lighting panel fixtures **1100** are placed in a row, a single continuous conduit is formed. By contrast, fluorescent lights generally require sockets at each end, and thus, in conventional transit vehicle lighting systems, a continuous lighting conduit does not exist. Having a single continuous conduit using a series of the lighting panel fixtures **1100** can significantly ease cleaning of the lighting fixtures. For example, it is possible to vacuum or force air through the entire continuous lighting conduit, providing the possibility of a self-cleaning mechanism. As one possible example, a bypass valve may be provided to the air conditioning or ventilation system whereby forced air can be selectively directed from one end of the continuous lighting conduit and exited at the other end, facilitating cleaning of the lighting fixtures. By contrast, fluorescent lamps generally need to be manually removed so that its lighting fixture can be cleaned.

[0065] FIGS. **15**A, **15**B, **15**C and **15**D are diagrams illustrating another embodiment of an LED lighting fixture **1500** as may be used in connection with various LED control network embodiments as disclosed herein. FIGS. **15**A and **15**B illustrate front and back oblique views, respectively, while FIGS. **15**C and **15**D illustrate cross-sectional side views of the lighting panel illustrated in FIGS. **15**A and **15**B. FIG. **15**D illustrates various individual components of the LED lighting fixture **1500** prior to assembly, whereas FIG. **15**C illustrates those same components after assembly.

[0066] As illustrated in FIGS. **15**A and **15**B, the lighting panel fixture **1500** includes a ceiling panel **1502**, an LED lighting mount **1504**, and a riser panel **1522**, similar to the embodiment of FIG. **11**A but without a hinge mechanism. The ceiling panel **1502** is generally configured to be positioned directly over the seating in the transit vehicle, and may abut the interior sidewall of the transit vehicle. The riser panel **1522** is, in this particular embodiment, curved in approximately a quarter arc shape, and would generally reach to the ceiling of the transit vehicle or some other top mounting surface. As before, the riser panel **1522** may optionally be configured to allow mounting of advertising prints or similar materials, as is common in the transit industry. The LED lighting mount **1504** interconnects the ceiling panel **1502** and the riser panel **1522**. The riser panel **1522** may be secured to the LED lighting mount **1504** with screws **1543**, which may be attached using clip-on extrusions as illustrated more clearly in FIGS. **15**C and **15**D.

[0067] The LEDs **1505** (shown in side view in FIGS. **15**C and **15**D) may be positioned along the LED lighting mount **1504** in a linear array or in some other configuration, similar to the configuration illustrated in FIG. **11**G. As before, a removable light permeable cover **1520** may be provided or affixed to the LED lighting mount **1504**, for softening or evening out the illumination from the LEDs **1505**. Snap-in lens holder **1571** may be manually removed (e.g., popped out) to allow convenient removal of the light permeable cover **1520**.

[0068] In one embodiment, the LED lighting mount **1504** of the LED lighting fixture **1500** is constructed using aluminum extrusion, and operates as a heat sink in addition to providing physical support for the LEDs. As before, the LED lighting mount **1104** may be configured with metallic heat dissipating fins **1563** on the backside of one or more of its walls. The riser panel **1522** may be constructed of a lightweight durable material such as fiberglass, or PVC plastic. Ceiling panel **1502** is preferably formed of a composite material, such as two metal layers sandwiching an insulator material. The length of the lighting panel fixture **1500** may vary depending upon lighting needs, and the use of LEDs (as opposed to, e.g., fluorescent tubes) increases the flexibility of fixture lengths and sizes. In one particular example, the lighting panel fixture **1500** is approximately 60" in length. The lighting panel fixture **1500** may comprise multiple LED units (or "light bars") **1550** (in one example, five such LED units **1150**, each approximately 12" long). Each LED unit **1550** in this example may have eight LEDs **1505**, arranged in a linear array, and which may be mounted on a metal PCB to help dissipate heat. The LED lighting panel fixture **1500** may have a control (i.e., slave) module to drive the LEDs **1505** of the multiple LED units **1550**, as described with respect to FIGS. **2**A through **4** previously. The control module may be contained in a control module housing **1560** on the backside of the LED lighting mount **1504**, as illustrated in FIGS. **15**A and **15**B. Multiple lighting panel fixtures **1500** may be connected using cables with complementary connectors at either end (similar to FIG. **2**B), in a daisy chain fusion, as previously described.

[0069] In the exemplary LED lighting panel fixture **1500** illustrated in FIGS. **15**A through **15**D, the conduits in which the LED units **1550** reside are open at either end, so that when the LED lighting panel fixtures **1500** are placed in a row, a single continuous conduit is formed, thereby potentially simplifying cleaning of the lighting fixtures as previously described.

[0070] FIG. **15**E is a side view diagram similar to FIGS. **15**C and **15**D, but illustrating a variation of the LED lighting fixture including one possible permanent hinge mechanism. Unlike the embodiment illustrated in FIG. **11**A, the riser panel **1522** in this example is not detachably hinged, but

instead is permanently hinged such that it can be rotated downwards (as illustrated in FIG. **15**E) to allow temporary access to, e.g., a utility panel or a storage compartment. In this example, an elongate hinge member **1524**, such as a "piano hinge" style hinge, traverses the riser panel **1522**. Removable insert **1527** may be manually removed to allow access to screws **1546**, which can be loosened to permit the riser panel **1522** to be rotated downwards as shown in FIG. **15**E. To re-secure the riser panel **1522**, the opposite steps may be carried out.

[0071] In alternative embodiments, other means may be provided (such as a sliding door or screw-on panel) to allow access behind the riser panel.

[0072] The control network architecture for the various embodiments of the LED-based control systems described herein may utilize, for example, control networks disclosed or described in one or more of U.S. Pat. Nos. 5,907,496, 6,061,600, 6,094,416, 6,147,967, 6,201,995, 6,611,860, 6,961,306, 7,046,621, 7,046,622, and/or 7,065,039, all of which are assigned to the assignee of the present invention and hereby incorporated by reference as if set forth fully herein.

[0073] For example, FIG. **5** is a high-level architectural diagram of a master-slave control network **501** for a transit vehicle, illustrating a possible relationship of an LED-based lighting control subsystem **550** to other components in the control network **501**. In the context of FIG. **5**, a node acting as a master bus controller for a particular bus will be referred to as a "master node" for that particular bus, and the other nodes on that bus will be referred to as "slave nodes" for that particular bus. In FIG. **5**, a master node **503** and a plurality of first-tier slave nodes **523** are connected to a main data bus **504**. In a preferred embodiment, each of the slave nodes **523** is configured or can be configured to control a secondary data bus. For example, the first-tier slave node **523**C is shown connected to a secondary data bus **523** in the control network **501**. The first-tier slave node **523**C functions as a second-tier master node with respect to second-tier slave nodes **533** connected to the secondary data bus **513**. Others of the first-tier slave nodes **523** can also serve as second-tier master nodes and be connected to different secondary buses having additional second-tier slave nodes. A multi-level or multi-tiered hierarchical control network is thereby established.

[0074] Each of the master node **503**, first-tier slave nodes **523**, second-tier slave nodes **533**, and other lower-level slave nodes (not shown in FIG. **5**) are referred to hereinafter generically as "nodes" and are designated as nodes **530** in FIG. **5**. In one aspect of a preferred embodiment as shown in FIG. **5**, each of the nodes **530** has substantially the same hardware configuration and can therefore function as either a master node or a slave node, depending upon how the control network **501** is configured. Each data bus, along with the nodes attached to it, may be generally referred to as a cell, and the master node connected to the data bus is referred to as a "cell controller" for that particular cell. As explained in more detail hereinafter, each node **530** configured as a master node transmits and receives messages over the data bus for the cell it controls. Each node **530** configured as a slave node remains in a listen mode, receiving but not transmitting messages over that data bus, unless specifically requested to transmit information over the data bus by the master node. Any number of the slave nodes can, even though operating as a slave node with respect to an upper tier, be simultaneously operating as a master node with respect to other lower-tier slave nodes at a different cell sub-level.

[0075] A preferred embodiment of the control network **501** involves a mechanism for redundant backup control of any node functioning as a master node at any level or sub-level of the control network **501**. Generally, the slave nodes connected to a particular data bus monitor the data bus while in a listen mode and await periodic signals from the master node for that data bus. Upon a failure to receive a signal from a master node within an expected time, the slave nodes connected to that data bus begin a wait period (which is preferably a different wait period for each slave node connected to the data bus). When the wait period elapses, the slave node determines that a failure in the master node for the particular data bus has occurred, and takes steps to take over the functionality of the master node. Each of the slave nodes is preferably programmed with a different wait period, so that there is no contention for replacing the master node when a master node failure has occurred. In one aspect, backup control of each master node is prioritized, such that there is a specific order in which the slave nodes can potentially take over control of the master node functionality when a failure has occurred.

[0076] In more detail, one of the nodes **530** attached to the main data bus **504** is configured as a master node **503**. The other nodes **530** attached to the main data bus **504** (in this example numbering four such nodes **530**) are configured as first-tier slave nodes **523**, meaning that they receive but do not transmit master-control signals over the main data bus **504**. The first-tier slave nodes **523** may, however, from time to time send responsive signals or status signals over the main data bus **504**.

[0077] In a preferred embodiment, each of the first-tier slave nodes **523** may be configured as a second-tier master node controlling a secondary bus. One such example is shown in FIG. **5**, wherein first-tier slave node **523**C is connected to a secondary data bus **513**. A plurality of other nodes **530** are also attached to the secondary bus data **513**, and serve as second-tier slave nodes **533**. There are three such second-tier slave nodes **533** in the example shown in FIG. **5**. With respect to the secondary data bus **513**, the first-tier slave/second-tier master node **523**C transmits master-control signals to the second-tier slave nodes **533**. The second-tier slave nodes **533** ordinarily operate only in a listen mode, but from time to time may send responsive messages or status messages to the second-tier master node **523**C. The other first-tier slave nodes **523**A, **523**B and **523**D may similarly be connected as second-tier master nodes (i.e., cell controllers) each controlling its own secondary bus or cell.

[0078] While the control network **501** shown in FIG. **5** has four first-tier slave nodes **523** and three second-tier slave nodes **533**, the number of first-tier slave nodes **523** and second-tier slave nodes **533** is limited only by the ability of the master node to communicate with the slave nodes over the particular data bus. There may be more slave nodes or fewer slave nodes on each bus than shown in the control network **501**. In a preferred embodiment, there are no more than eight such cell controllers, although more than eight may be used so long as processing capacity and speed permit.

[0079] In addition, further levels of control nesting beyond two data buses may also be provided, using a similar approach to the two data bus method. Thus, for example, one or more of the second-tier slave nodes **533** may be configured as a third-tier master node controlling its own tertiary or third-tier data bus. While FIG. **5** only shows two nested control levels, the same control concepts would apply to a control network

architecture having additional nested control levels. Examples of control networks having more than two data buses are depicted in FIGS. **8** and **9** and described in more detail hereinafter.

[0080] In a preferred embodiment, communication over the main data bus **504** and the secondary data bus **513** (or buses, if appropriate) is time-multiplexed such that only one node **530** is transmitting over a particular data bus at a given time. Usually, each transmitted message will be targeted for a specific destination node **530**, which may be specified by address bits in the transmitted message. However, in some embodiments broadcast messages may also be used targeted to multiple nodes **530**.

[0081] Responsibilities for tasks, or groups of tasks, may be assigned to specific nodes **530**. For example, each of the first-tier slave nodes **523** may be assigned a distinct sphere of responsibility. Similarly, each of the second-tier slave nodes **533** may be assigned a distinct sphere of responsibility.

[0082] Each of the nodes **530** preferably comprises an uplink transceiver **507**, a downlink transceiver **508**, and a switch **509**. Each of the nodes **530** receives signals over its downlink transceiver **508**. Over the main data bus **504**, the first-tier master node **503** transmits master-control signals to each of the first-tier slave nodes **523**. From time to time, according to the programmed control protocol, the first-tier slave nodes **523** respond to the master-control signals, or otherwise send status messages to the first-tier master node **503** when events occur specific to that first-tier slave node **523**. Otherwise, the first-tier slave nodes **523** do not ordinarily communicate with each other.

[0083] In a similar manner, over each secondary data bus (such as secondary data bus **513**), the second-tier master node **523** (for example, first-tier slave/second-tier master node **523**C in FIG. **5**) transmits master-control signals to each of the second-tier slave nodes **533** connected to the same secondary data bus. From time to time, according to the programmed control protocol, the second-tier slave nodes **533** respond to the master-control signals, or otherwise send status messages to the second-tier master node **523**C when events occur specific to that second-tier slave node **533**. Otherwise, the second-tier slave nodes **523** do not ordinarily communicate with each other.

[0084] Communication between nodes is preferably carried out using half-duplex time division multiplexing. In typical operation, the master node polls each of the slave nodes periodically. Each of the nodes is preferably provided with a unique node identification number or address that distinguishes it from all other nodes of the control network. The master node sends a control message to each slave unit in turn, using the node identification number or address to identify the intended destination. Each of the slave nodes receives the control message but only reacts if it recognizes its own node identification number or address in the control message. The slave node takes the actions requested by the control message received from the master node. Within a designated time period after receiving the control message, the slave node responds to the master node with an acknowledgment message. Each of the slave nodes are polled in turn so that the master node can keep track of events happening throughout the system.

[0085] A communication protocol is preferably established so as to avoid collisions on each of the data buses. A simple and effective communication protocol is one in which the master node for the particular data bus sends a control message to a particular slave node, which responds with an acknowledgment or status message within a predetermined amount of time before the master node contacts another slave node. Slave nodes generally do not initiate communication without being first polled by the master node. The master node may also send out a broadcast control message that is intended for receipt by more than one of the slave nodes. The broadcast control message can comprise a node identification number or address that instructs a single particular node to respond to the broadcast control message. The single node selected for response may be the most critical node requiring receipt of the broadcast control message.

[0086] Failure of the current master node (at any of the control levels) commonly results in the master node either failing to transmit, or else transmitting improper control information to the slave nodes over the data bus. According to a preferred redundant backup control protocol, the slave nodes periodically receive master-control messages from the master node and, in the event that proper master-control messages fail to appear, initiate a failure mode response procedure. For example, a slave node may take over the responsibilities of the master node if it fails to detect a transmission from the master node within the expected time period.

[0087] In one embodiment, the lighting subsystem **550** comprises a portion of the larger control network **501** of the transit vehicle. A second-tier master node **523**B functions as the master node **203** described with respect to FIG. **2**A, and the other nodes coupled to bus **513**, i.e., nodes **533**A, **533**B and **533**C in this example, function as the LED/slave nodes **202** in FIG. **2**A. While the lighting subsystem master node **523**B generally provides high-level control for the lighting subsystem **550**, the lighting subsystem master node **523**B may itself be a slave node with respect to the higher level of the control network hierarchy. In other words, the lighting subsystem master node **523**B may act as a slave node with respect to first-tier bus **504**, under control and direction of first-tier master node **503**. In one example, the downlink transceivers **508** of slave nodes **533**A, **533**B and **533**C may not necessarily control other lower level network tiers, but rather would primarily be provided for redundant backup control of the lighting subsystem master node **523**B in accordance with the operation described herein.

[0088] FIG. **6** is a block diagram of an embodiment of a network node **603** as may be used within the control network architecture shown in FIG. **5**. Detection of and response to a failure mode condition may be explained in greater detail with reference to the network node **603** illustrated in FIG. **6**. Because failure mode detection and response may be carried out by a node **530** operating as a slave node, the following discussion will assume that the node **603** shown in FIG. **6** is initially configured as a slave node. Further, for simplicity of explanation, it will be assumed that the node **603** shown in FIG. **6** is a first-tier slave/second-tier master node connected to a main bus and a secondary bus (such as first-tier slave/second-tier master node **523**C connected to the main data bus **504** and secondary data bus **513** in FIG. **5**), although the same node circuit configuration is preferably used for each of the nodes **530**, regardless of control level, for ease of construction and flexibility purposes.

[0089] In the node block diagram of FIG. **6**, a node **603** is shown connected to a first bus (e.g., main bus) **604**. The node **603** comprises an uplink transceiver **611**, a downlink transceiver **621**, a CPU **612** connected to the uplink transceiver **611**, and another CPU **622** connected to the downlink transceiver **621**. Both CPUs **612**, **622** are preferably connected to a dual-port RAM **618**, and each CPU **612**, **622** is connected to a ROM program store **614** and **624**, respectively. The second CPU **622** is connected through an appropriate interface to I/O

ports **654**, which may comprise sensor inputs, control signal outputs, status LEDs, LCD display, keypad, or other types of external connections.

[0090] Each node **603** is preferably capable of both sending and receiving messages (e.g., control instructions). Typically, the uplink transceiver **611** operates in a "slave" mode whereby the node **603** receives control instructions using the uplink transceiver **611** and then responds thereto, and the downlink transceiver **621** operates in a "master" mode whereby the node **603** issues control instructions (e.g., polls slave nodes) and awaits a response from other nodes after sending such control instructions.

[0091] The downlink transceiver **621** of the node **603** is connected to a secondary data bus **652**, to which is also connected a plurality of second-tier slave nodes **651** (assuming the node **603** is a first-tier slave/second-tier master node). The node **603** thereby functions as a first-tier slave node with respect to the main data bus **604**, receiving with its uplink transceiver **611** first-tier master-control signals over the main bus **604** from a first-tier master node (such as master node **503** shown in FIG. **5**), and also functions as a second-tier master node with respect to the secondary data bus **652**, transmitting second-tier master-control signals with its downlink transceiver **634** to second-tier slave nodes **651**.

[0092] The node **603** also comprises a pair of switches **635***a*, **635***b* connected between the downlink transceiver **621** and the signal lines **643***a*, **643***b* of the main data bus **604**. In normal operation, the switches **635***a*, **635***b* remain open (unless the node **503** is also the first-tier master node, such as master node **503** shown in FIG. **5**, in which case the switches **635***a*, **635***b* would be closed), and the downlink transceiver **621** is thereby isolated from the main data bus **604**. However, when a first-tier master node failure condition is detected, switches **635***a*, **635***b* are closed, enabling the downlink transceiver **621** to take over for the first-tier master node. The downlink transceiver **621** would therefore function simultaneously as master node with respect to both the main data bus **604** and the secondary data bus **652**.

[0093] In a preferred embodiment, detection of a master node failure condition on the main data bus **604** is accomplished using a timer mechanism, such as a hardware timer **613** accessible (either directly or indirectly) by the CPU **612** that is connected to the uplink transceiver **611**. According to a preferred control protocol (assuming the node **603** is a first-tier slave/second-tier master node), the uplink transceiver **611** of node **603** receives first-tier master-control signals periodically from the first-tier master node (such as master node **503** in FIG. **5**). The master-control signals may, for example, request status information from the node **603**, or instruct the node **603** to carry out certain control or input/output functions. The node **603** ordinarily responds by carrying out the requested functions and/or sending an acknowledgment or status signal to the first-tier master control node using the uplink transceiver **611**.

[0094] Timer **613** times out a wait period between master-control signals received from the first-tier master control node. In a preferred embodiment, each time the uplink transceiver **611** receives a master-control signal from the first-tier master node that is recognized as an appropriate master-control signal within the particular programmed control protocol (whether or not the master-control signal is directed to the particular node **603**), the CPU **612** connected to the uplink transceiver **612** resets the timer **613**. If the timer **613** ever times out, then CPU **612** responds by asserting a failure mode response procedure. The timing out of timer **613** may result in an interrupt to CPU **612** in order to inform the CPU **612** of the failure to receive master-control signals, or else the CPU **612** may periodically monitor the timer **613** and, when the CPU **612** notices that the timer **613** has timed out, assert a failure mode response procedure.

[0095] When a failure mode condition is detected, the CPU **612** sets a failure mode status bit in a predetermined flag location within the dual-port RAM **618**. The other CPU **622** periodically monitors the failure mode status bit in the dual-port RAM **618** and is thereby informed when a failure occurs. Alternatively, instead of the CPUs **612**, **622** communicating through the dual-port RAM **618**, timer **613** can directly inform CPU **622** when a failure to receive master-control signals has occurred (i.e., when timer **613** has timed out).

[0096] When the CPU **622** has been informed or otherwise determined that a failure mode condition exists, and that the first-tier master node has presumably failed, the CPU **622** sends a signal over control line **633** to close switches **635***a*, **635***b*, thereby connecting the downlink transceiver **621** to the main bus **604**. From that point on, the CPU **622** performs as the first-tier master node with respect to the main bus **604**. The node **603** can continue to receive information over the main data bus **604** using the uplink transceiver **611**. Alternatively, the node **603** may thereafter perform all transmission and reception over both the main bus **604** and the secondary bus **652** using the downlink transceiver **621**. When the failure mode is entered, the CPU **622** may be programmed so as to directly carry out the I/O port functions for which it previously received instructions from the first-tier master node, or the node **603** may send master-control signals to its own uplink transceiver **611** and thereby continue to carry out the I/O port functions as it had previously been doing. In other words, the node **603** can give itself control instructions over the main data bus **604** so that it can continue to perform its previously assigned functions. If, after taking over for the first-tier master node, the node's downlink transceiver **611** should fail, the node **603** can still continue to perform its control functions when the next slave node takes over control as the new first-tier master node (as later described herein), because its uplink transceiver **611** continues to function in a normal manner.

[0097] According to the above described technique, the node **603** thereby substitutes itself for the first-tier master node upon the detection of a first-tier master node failure as indicated by the failure to receive the expected first-tier master-control signals. Should the node **603** fail, either before or after taking over control for the first-tier master node, the next first-tier slave node would take over and become the first-tier master node in a similar manner to that described above.

[0098] Referring again to FIG. **5**, the order in which the first-tier slave nodes **523** take over for the first-tier master node **503** is dictated by the wait period timed out by the timer **613** of the particular first-tier slave node **523**. The timer **613** (see FIG. **6**) for each first-tier slave node **523** is programmed or reset using a different time-out value. A first-tier slave node **523** only asserts a failure mode condition when its internal timer **613** reaches the particular timeout value programmed for that particular node **523**.

[0099] While the programmed wait periods for the internal timer **613** in each first-tier slave node **523** can vary depending upon the control application, illustrative wait periods are programmed in ten millisecond increments. Thus, for example, first-tier slave node **523***a* could be programmed with a 10 millisecond wait period; the next first-tier slave node **523***b* could be programmed with a 20 millisecond wait period; the next first-tier slave node **523***c* could be programmed with a 30 millisecond wait period; and the last first-tier slave node **523***d* could be programmed with a 40 millisecond wait period; and so on. First-tier slave node **523***a*

would take over as the first-tier master node if 10 milliseconds elapses without it receiving any proper first-tier master-control signals; the next first-tier slave node **523***b* would take over as the first-tier master node if 20 milliseconds elapses without it receiving any proper first-tier master-control signals; the next first-tier slave node **523***c* would take over as the first-tier master node if 30 milliseconds elapses without it receiving any proper first-tier master-control signals; and so on.

[0100] Use of 10 millisecond increments for the wait periods in the above example is considered merely illustrative, and the actual wait periods should be selected depending upon the time criticality of the control messages, and the number of messages that may be missed before a high enough degree of certainty is established that the master node has failed. For example, if a slave node expects to observe a control-message signal on the data bus no later than every 5 milliseconds, then the slave node may be programmed to assert a failure mode condition after a wait period corresponding to the absence of a predefined number of messages—for example, twenty messages (i.e., 100 milliseconds). If critical aspects of the system requiring master node control need to be serviced in a shorter time period, then the wait period would have to be reduced to accommodate the time-sensitive components of the system.

[0101] The order in which the slave nodes take over for the master node need not be dictated by the relative position in the control loop of the slave node with respect to the master node, but rather may be dictated according to the programmed wait period in each slave node. Flexibility is thereby provided in the order of priority in which the slave nodes take over for the master node in the event of a failure event.

[0102] Accordingly, by use of the aforementioned techniques described herein, redundant backup for the first-tier master node **503** is provided. Such redundant backup control is provided without requiring additional physical nodes to be located within the control system, and without having to provide wiring for such additional physical nodes to the buses **504** or **513**. The redundant backup for the master node **504** is also accomplished while resolving contention problems that might otherwise occur if each of the first-tier slave nodes **523** were programmed with the identical timeout period.

[0103] In a preferred embodiment, redundant backup control is provided in a similar manner for the secondary data bus **513**, and each additional data bus that may be provided in the system. Thus, each of the second-tier slave nodes **533** is preferably configured with the circuitry shown for node **603** in FIG. **6**, and each of the second-tier slave nodes **533** can therefore substitute itself for the first-tier slave/second-tier master node **523***c* if the first-tier slave/second-tier master node **523***c* fails.

[0104] If a particular node is operating as a master node for two buses as a result of a failure of the master node on a higher-tier bus, and the node operating as such fails, then it is possible that two different nodes will take over for the failed node, one node taking over on each bus. For example, supposing that first-tier slave/second-tier master node **523***c* has already taken over as the first-tier master node due to a failure of the master node **503**, and further suppose that first-tier slave/second-tier master node **523***c* too fails, then the next first-tier slave node **523***d* would take over as the first-tier master node with respect to the main data bus **504**, but the first second-tier slave node **533***a* would take over as second-tier master node with respect to the secondary data bus **513**.

[0105] In the above manner, despite the failure of one or more nodes, substantial functionality of the control system as a whole can be maintained. A failed node is essentially discarded or bypassed to the extent possible so as to maintain the highest possible degree of continued operability. Furthermore, because certain parts of the system will continue operate despite the failure of the master node, identification of the failed node by engineers or maintenance personnel should be simplified by being able to identify the inoperative portion of the system that has become isolated due to the failure.

[0106] In one aspect, separation of responsibility in each node **603** of master functions and slave functions between two different CPU's each operating with a different transceiver allows the node **603** to potentially continue operating as either a master node or a slave node should one of the CPU's fail, providing that the failure does not disrupt both of the transceivers at the node **603**.

[0107] In one embodiment, the nodes **530** of FIG. **5** are wired using a single cable connecting all of the nodes **530** in a loop configuration. Details of such a wiring technique are described in U.S. Pat. No. 5,907,486 entitled "Wiring Method and Apparatus for Distributed Control Network," assigned to the assignee of the present invention, and previously incorporated herein by reference.

[0108] In other embodiments, the nodes **530** of FIG. **5** are configured with fault isolation and recovery circuitry in the case of a short circuit or similar event. Details of such fault isolation and recovery circuitry are described, for example, in U.S. Pat. No. 6,147,967 entitled "Fault Isolation and Recovery In A Distributed Control Network," incorporated by reference as if set forth fully herein.

[0109] FIG. **7** is a diagram of another example of a control network architecture in accordance with another embodiment, and having multiple second-tier buses. Each of the nodes shown in FIG. **7** may be configured to include the circuitry shown for preferred node **603** in FIG. **6**. FIG. **7** shows an example of a control network architecture for a control network **701** having three data buses **704**, **714** and **724**. A first-tier master node **703** and a plurality of first-tier slave nodes **712** are connected to the main data bus **704**. One of the first-tier slave nodes **712**, designated as A**1** in FIG. **7**, operates as a second-tier master node, and is connected to the second data bus **714** along with a plurality of second-tier slave nodes **722**. Another of the first-tier slave nodes **712**, designated as D**1** in FIG. **7**, operates as another second-tier master node, and is connected to the third data bus **724** along with another plurality of second-tier slave nodes **732**. The other first-tier slave nodes **712**, designated B**1** and C**1** in FIG. **7**, could also be configured as master nodes of a second-tier bus. The particular example in FIG. **7** thereby provides a hierarchical control network **701** having two control levels or tiers, and three data buses.

[0110] FIG. **8** is a diagram of another example of an embodiment of a hierarchical control network **801**, having a third-tier bus, as may be used in connection with a lighting system control network as disclosed herein. The control network **801** shown in FIG. **8** has four buses **804**, **814**, **824** and **834**. Similar to FIG. **7**, a first-tier master node **803** and a plurality of first-tier slave nodes **812** are connected to the main data bus **804**. One of the first-tier slave nodes **812**, designated as A**1** in FIG. **8**, operates as a second-tier master node, and is connected to the second data bus **814** along with a plurality of second-tier slave nodes **822**. Another of the first-tier slave nodes **812**, designated as D**1** in FIG. **8**, operates as another second-tier master node, and is connected to the third data bus **824** along with another plurality of second-tier slave nodes **832**. One of the second-tier slave nodes **832** connected to the third data bus **824**, denoted as A**2'** in FIG. **8**, operates as a third-tier master node with respect to the fourth data bus **834**, which is connected to a plurality of third-tier slave nodes **842**. The structure of FIG. **8** thereby provides a

hierarchical control network **801** having three control levels or tiers, and four data buses. In the context of FIG. **8**, the control network subsystem associated with any of the data buses **804**, **814**, **824** or **834** may represent the lighting control subsystem used in a transit vehicle, although the lighting control subsystem is more likely to be associated with a lowest level tier such as the subsystems associated with buses **814** or **834**.

[0111] It will be appreciated that, expanding the approach used in FIGS. **7** and **8**, additional control levels may be created by adding successive lower control tiers, or additional slave nodes at any particular tier may be configured as cell controllers to control additional localized data buses. A great deal of flexibility is thereby provided in establishing a hierarchical control structure suitable for many different control applications.

[0112] FIG. **9** is a diagram of a hierarchical control network with a matrix architecture providing supervision of mid- and lower-tier levels of the control network, as may be used in connection with a lighting system control network as disclosed herein, and based on similar principles to those described with respect to the control networks of FIGS. **5**, **7** and **8**. In FIG. **9**, a first-tier master node **900** and a plurality of first-tier slave nodes **902** are connected to the main data bus **901**. Each of the first-tier slave nodes **902** (up to, e.g., k nodes) may operate as a second-tier master node with respect to a respective second-tier data bus (denoted **9S1**, **9S2** . . . **9**Sk in FIG. **9**), each of which has connected to it a plurality of second-tier slave nodes **903**. Likewise, each of second-tier slave nodes **903** may be connected to a respective third-tier data bus (denoted **9T1**, **9T2** . . . **9**Tk in FIG. **9**), each of which has connected to it a plurality of third-tier slave nodes **904**. This same expansion may occur at lower tier levels, with respect to fourth-tier data buses (denoted **9F1**, **9F2** . . . **9**Fk in FIG. **9**) down to the Nth level. The control network **950** depicted in FIG. **9** thereby provides a multiple-bus hierarchical control scheme, with each node preferably capable of fanning out to a number of lower-level slave nodes, which may be repeated down to an arbitrary number of levels or tiers.

[0113] In a preferred embodiment, each node in FIG. **9** is given a unique node identifier to facilitate communication among the various nodes in the network. The unique node identifier may comprise, for example, a series of three binary numbers XYZ, the first number X identifying the tier for which the node is connected in its capacity as a slave, the second number Y identifying which bus of the tier (i.e., tier X) the node is attached to by identifying the relative position of the bus with respect to the other buses attached to the tier, and the third number Z identifying the relative position of the node with respect to other nodes attached to the same bus (i.e., bus Y of tier X).

[0114] The control network architecture depicted in FIG. **9** has the advantage of being relatively easily expandable and is capable of controlling very large networks. To reduce the potential for time lag or latency in very large networks when propagating important communications from lower tier nodes through a number of intermediary nodes up to the first-tier master node **900**, it may be desirable to add a supervisory network coupled to one or more of the lower-tier buses, so as to allow monitoring of communications at the lower tier levels, and to further allow the possibility of redundant backup control and/or communication with respect to the lower-tier master nodes.

[0115] FIGS. **10**A and **10**B are exemplary timing diagrams for communication in a hierarchical control network having a matrix architecture, such as the control network illustrated in FIG. **9**. A wide variety of other communication protocols may also be used, in FIG. **9** and in connection with other embodiments as disclosed herein.

[0116] In various embodiments, an LED-based lighting control system constructed in accordance with the principles and techniques disclosed herein may exhibit a number of advantages and/or useful characteristics. For example, the lighting control system and its various components may have a long lifetime, because LEDs can operate up to 100,000 hours or more. As a result, fewer lighting fixtures require replacement over time, as compared to, e.g., fluorescent lighting fixtures, which may reduce maintenance costs (both replacement component costs and service costs). LEDs consume less current than fluorescent lights, typically using about half the power, thus resulting in a significant power savings. Using LEDs may reduce the effects of electromagnetic coupling, and also reduce arcing because the LEDs typically operate off a 12 or 24 Volt supply.

[0117] As another potential advantage, LEDs have no filaments or bulbs, and are highly durable. LEDs are generally resistant to vibration, cold, dampness, and salt spray, providing many environmental settings in which the lighting systems disclosed herein may be utilized. An LED-based lighting network may also be more environmentally friendly, as compared with fluorescent, incandescent and neon lighting, in that their construction requires less fossil fuels (required to produce the glass needed to encapsulate incandescent, fluorescent and neon lighting), and potentially environmentally harmful materials (such as Mercury) or gases (such as neon) need not be used in the manufacture of LEDs.

[0118] Another advantage of the LED-based lighting systems as disclosed herein is that the LED fixtures and individual LED units may be made any desired length, by, for example, altering the number of LEDs in the array. By contrast, fluorescent lights generally are available in only certain preset sizes, limiting flexibility. Different sized LED-based fixtures may be mixed and matched within a transit vehicle, offering great flexibility in physical layout and arrangement.

[0119] Yet another advantage of using LED-based lighting is that the LEDs can be made more directed than incandescent or fluorescent lighting, and can, for example, be targeted downwards towards passenger seating areas. In this manner, glare that might otherwise occur on the driver's windshield from lighting the passenger seating compartments can advantageously be reduced.

[0120] Use of a multiplexed control system as described in connection with certain embodiments may enhance or facilitate control of the LED-based lighting fixtures. Addressable IDs for the slave nodes may be used for selective control of different LED-based lighting fixtures in the lighting system. Connecting the LED-based lighting fixtures in a daisy chain fashion may reduce the amount of wiring required. The LED output level may also be conveniently adjusted, manually or automatically, and may be selectively reduced for example to conserve battery output during overload conditions. Using the multiplexed control system, monitoring and diagnosis of the LED-based lighting fixtures is also facilitated. The LED-based lighting fixtures may also provide emergency lighting functionality.

[0121] In certain embodiments in which a ring loop architecture is utilized, survivability and reliability of the control network may be enhanced. Hierarchical control of lighting, in a cell-based fashion, makes the architecture readily scalable and relatively easy to control and program. The control network infrastructure provides feedback for monitoring and diagnosis, and allows automatic detection of faults and their location. A control network matrix architecture may also be

used, in particularly complex network settings, allowing more rapid feedback in case of emergencies.

[0122] The novel techniques described herein may be used to control both LED-based lighting systems and conventional incandescent lights. The principles described herein have applicability beyond transit vehicles, and may be used, for example, in connection with lighting systems in buildings, factories, and other facilities. The novel techniques described herein may also be combined with more general building lighting control, or with air-conditioning control, environmental control, and other electronic functions (temperature, music, etc.).

[0123] While preferred embodiments of the invention have been described herein, many variations are possible which remain within the concept and scope of the invention. Such variations would become clear to one of ordinary skill in the art after inspection of the specification and the drawings. The invention therefore is not to be restricted except within the spirit and scope of any appended claims.

What is claimed is:

1. A lighting system for a transit vehicle, comprising:

a plurality of LED-based lighting fixtures, each of said LED-based lighting fixtures comprising a plurality of light-emitting diodes (LEDs) collectively providing area lighting, and a plurality of slave nodes for controlling operation of the LEDs;

a master node for controlling said slave nodes and thereby controlling the operation of said LED-based lighting fixtures;

a power bus interconnecting said master node and slave nodes; and

a communication bus interconnecting said master node and slave nodes.

2. The lighting system of claim **1**, wherein said LED-based lighting fixtures comprise an input connector and an output connector, and wherein the power bus comprises power cable segments connecting the LED-based lighting fixtures in a daisy chain.

3. The lighting system of claim **2**, wherein said communication bus is integrated with said power cable segments, whereby the communication bus is connected to said LED-based lighting fixtures in a daisy chain.

4. The lighting system of claim **1**, wherein said LEDs of an LED-based lighting fixture are groupwise controllable via the slave node.

5. The lighting system of claim **1**, wherein said master node responds to a dimming control input by conveying commands over the communication bus to selectively dim LEDs at the LED-based lighting fixtures.

6. The lighting system of claim **5**, wherein said dimming control input is provided from a manual dimming control operable by a transit vehicle driver.

7. The lighting system of claim **5**, wherein said dimming control input is provided from an emergency lighting command.

8. The lighting system of claim **1**, wherein said master node further comprises a voltage regulator for providing low voltage power to digital electronics including a master node micro-controller.

9. The lighting system of claim **1**, wherein each of said slave nodes further comprises a voltage regulator for providing low voltage power to digital electronics including a slave node micro-controller.

10. The lighting system of claim **9**, wherein said voltage regulator converts power from said power bus for use by the LED-based lighting fixture controlled by the slave node.

11. The lighting system of claim **9**, wherein said slave node sets a target LED current level based upon a recorded age of the LEDs, and wherein said voltage regulator adjusts the amount of current supplied to the LEDs of the LED-based lighting fixture according to the target current level.

12. The lighting system of claim **11**, wherein voltage regulator adjusts a duty cycle of pulse width modulation in order to adjust the amount of current supplied to the LEDs of the LED-based lighting fixture to the target current level.

13. The lighting system of claim **12**, wherein said LEDs are dimmed by reducing the duty cycle of pulse width modulation.

14. The lighting system of claim **11**, wherein said LED-based lighting fixture further comprises a temperature sensor, whereby said voltage regulator adjusts the amount of current supplied to the LED-based lighting fixture according to a reading from said temperature sensor.

15. The lighting system of claim **14**, wherein the slave node periodically reads an output of said temperature sensor, and commands said voltage regulator to adjust the amount of power supplied to the LED-based lighting fixture in response thereto.

16. The lighting system of claim **1**, further comprising an optical sensor for sensing a level of ambient illumination, whereby the LEDs are automatically dimmed if the level of ambient illumination surpasses a dimming command threshold.

17. The lighting system of claim **1**, wherein said LEDs are high output.

18. A distributed control network for a transit vehicle lighting system, comprising:

a plurality of LED-based lighting fixtures, each of said LED-based lighting fixtures comprising a plurality of light-emitting diodes (LEDs) for illuminating an area of a transit vehicle;

a plurality of slave nodes for controlling the LED-based lighting fixtures;

a master node in communication with said slave nodes; and

a digital communications bus for communicating among the master node and the slave nodes.

19. The distributed control network of claim **18**, further comprising a power bus interconnecting said master node and slave nodes.

20. The distributed control network of claim **19**, wherein said power bus is intergrated with the digital communications bus in a plurality of power/data cable segments, and wherein said master node is communicatively coupled to said slave nodes by connecting said slave nodes in a daisy chain using with said power/data cable segments.

21. The distributed control network of claim **18**, wherein each of said slave nodes is configured to control an LED current based upon one or both of a recorded age of the LEDs and a measured temperature of at least one of the LEDs.

22. The distributed control network of claim **21**, wherein the recorded age of the LEDs is stored in a lifetime counter.

23. The distributed control network of claim **21**, wherein the LED current is adjusted by varying a duty cycle of an input power signal across the LEDs.

24. The distributed control network of claim **18**, further comprising an optical sensor, whereby said master node operates according to a plurality of brightness modes and auto-

matically commands said slave nodes to dim the LEDs in conditions of brighter ambient illumination.

25. The distributed control network of claim **18**, further comprising an emergency lighting mode wherein a reduced number of LEDs are activated by one or more slave nodes.

26. The distributed control network of claim **25**, further comprising a battery connected to one of more of said LED-based lighting fixtures to provide energy as a backup power supply.

27. An LED-based lighting fixture for a transit vehicle, comprising:

a plurality of light-emitting diodes (LEDs) for illuminating an area of a transit vehicle;

a power regulator receiving an input power supply signal;

a temperature sensor for measuring a temperature of one or more of said LEDs; and

a controller for providing a target current command to said power regulator, said controller receiving temperature measurements from said temperature sensor and adjusting the target current command in response thereto.

28. The LED-based lighting fixture of claim **27**, wherein said controller sets the target current command based at least in part upon a recorded age of the LEDs.

29. The LED-based lighting fixture of claim **27**, wherein said power regulator adjusts a duty cycle of pulse width modulation in order to adjust the amount of current supplied to the LEDs to the level indicated by the target current command.

30. The LED-based lighting fixture of claim **29**, wherein said LEDs are dimmable by reducing the duty cycle of pulse width modulation.

31. The LED-based lighting fixture of claim **30**, further comprising an optical sensor for sensing a level of ambient illumination, whereby the LEDs are automatically dimmed if the level of ambient illumination surpasses a predefined threshold.

32. The LED-based lighting fixture of claim **27**, wherein said controller is responsive to commands from a remote master node located in the transit vehicle.

33. The LED-based lighting fixture of claim **32**, further comprising a combined power/data bus for communicating between said controller and the master node and for carrying power from a remote on-board power supply to the LED-based lighting fixture in order to provide said input power supply signal.

34. The LED-based lighting fixture of claim **27**, further comprising a ceiling panel adapted to abut a transit vehicle interior sidewall, an LED lighting mount on which said LEDs are disposed, and a riser panel adapted to abut a transit vehicle ceiling or interior top mounting surface.

35. The LED-based lighting fixture of claim **34**, wherein said riser panel includes a locking mechanism for securing the riser panel to the transit vehicle ceiling or interior top mounting surface, and a detachable hinge for releasably attaching to said LED lighting mount, whereby the riser panel may be fully removed from and reattached in position by releasing said locking mechanism.

36. The LED-based lighting fixture of claim **34**, wherein said riser panel includes a locking mechanism for securing the riser panel to the transit vehicle ceiling or interior top mounting surface, and a hinge for attaching the riser panel to said LED lighting mount, whereby the riser panel may be rotationally swung open by releasing said locking mechanism.

37. The LED-based lighting fixture of claim **34**, wherein said lighting mount forms a conduit in which said LEDs are disposed.

38. The LED-based lighting fixture of claim **37**, wherein said conduit is covered by a contiguous opaque lens which partially diffuses the LED illumination.

39. The LED-based lighting fixture of claim **34**, wherein said LEDs are disposed on a front side of said conduit, and further comprising a housing disposed on a back side of said lighting mount for housing control electronics including said power regulator and said controller, and for receiving power and data signals.

40. The LED-based lighting fixture of claim **27**, further comprising a battery power supply.

41. The LED-based lighting fixture of claim **27**, wherein said controller responds to an emergency lighting mode by causing a reduced number of LEDs to be illuminated.

42. The LED-based lighting fixture of claim **41**, wherein said reduced number of LEDs are capable of drawing power from a backup battery power supply when in said emergency lighting mode.

43. An LED-based lighting fixture for a transit vehicle, comprising:

a plurality of light-emitting diodes (LEDs) for illuminating an area of a transit vehicle;

a ceiling panel fixture including a ceiling panel adapted to abut a transit vehicle interior sidewall and an LED lighting mount on which said LEDs are disposed, said LED lighting mount having a plurality of metallic heat dissipating fins for dissipating heat generated by said LEDs; and

a riser panel attached to said ceiling panel fixture and adapted to abut a transit vehicle ceiling or interior top mounting surface;

wherein said riser panel includes a locking mechanism for securing the riser panel to the transit vehicle ceiling or interior top mounting surface.

44. The LED-based lighting fixture of claim **43**, further comprising a local voltage regulator for receiving a power supply signal and providing a regulated power output to said LEDs.

45. The LED-based lighting fixture of claim **44**, further comprising a controller for adjusting a target current level for said LEDs based upon at least one of a monitored LED temperature and a recorded age of said LEDs.

46. The LED-based lighting fixture of claim **45**, wherein said controller adjusts the illumination intensity of said LEDs by adjusting a duty cycle associated with said local power regulator.

47. The LED-based lighting fixture of claim **43**, wherein said LED lighting mount comprises an open-ended transverse conduit in which said LEDs are mounted, such that when a second LED-based lighting fixture is adjacently positioned the conduits of each LED-based lighting fixture line up to form a single continuous conduit.

48. The LED-based lighting fixture of claim **43**, wherein said riser panel comprises a detachable hinge for releasably attaching to said ceiling panel fixture, whereby the riser panel may be fully removed from and reattached in position by releasing said locking mechanism.

* * * * *