US006774584B2

(12) **United States Patent**
Lys et al.

(10) **Patent No.: US 6,774,584 B2**
(45) **Date of Patent: Aug. 10, 2004**

(54) **METHODS AND APPARATUS FOR SENSOR RESPONSIVE ILLUMINATION OF LIQUIDS**

(75) Inventors: **Ihor A. Lys**, Boston, MA (US); **Frederick M. Morgan**, Quincy, MA (US); **George G. Mueller**, Boston, MA (US); **Kevin J. Dowling**, Westford, MA (US)

(73) Assignee: **Color Kinetics, Incorporated**, Boston, MA (US)

(*) Notice: Subject to any disclaimer, the term of this patent is extended or adjusted under 35 U.S.C. 154(b) by 0 days.

(21) Appl. No.: **10/040,266**

(22) Filed: **Oct. 25, 2001**

(65) **Prior Publication Data**

US 2002/0163316 A1 Nov. 7, 2002

Related U.S. Application Data

(63) Continuation-in-part of application No. 09/669,121, filed on Sep. 25, 2000, which is a continuation of application No. 09/425,770, filed on Oct. 22, 1999, now Pat. No. 6,150,774, which is a continuation of application No. 08/920,156, filed on Aug. 26, 1997, now Pat. No. 6,016,038, and a continuation-in-part of application No. 09/215,624, filed on Dec. 17, 1998, now Pat. No. 6,528,954, and a continuation-in-part of application No. 09/213,607, filed on Dec. 17, 1998, now abandoned, and a continuation-in-part of application No. 09/213,189, filed on Dec. 17, 1998, now Pat. No. 6,459,919, and a continuation-in-part of application No. 09/213,581, filed on Dec. 17, 1998, and a continuation-in-part of application No. 09/213,540, filed on Dec. 17, 1998, and a continuation-in-part of application No. 09/333,739, filed on Jun. 15, 1999, and a continuation-in-part of application No. 09/344,699, filed on Jun. 25, 1999, and a continuation-in-part of application No. 09/616,214, filed on Jul. 14, 2000, and a continuation-in-part of application No. 09/870,418, filed on May 30, 2001, and a continuation-in-part of application No. 09/805,368, filed on Mar. 13, 2001, and a continuation-in-part of application No. 09/805,590, filed on Mar. 13, 2001, and a continuation-in-part of application No. 09/870,193, filed on May 30, 2001, now Pat. No. 6,608,453, and a continuation-in-part of application No. 09/742,017, filed on Dec. 20, 2000, now abandoned, which is a continuation of application No. 09/213,548, filed on Dec. 17, 1998, now Pat. No. 6,166,496, and a continuation-in-part of application No. 09/815,418, filed on Mar. 22, 2001, which is a continuation of application No. 09/213,548, filed on Dec. 17, 1998, now Pat. No. 6,166,496.

(60) Provisional application No. 60/297,828, filed on Jun. 13, 2001, provisional application No. 60/296,377, filed on Jun. 6, 2001, provisional application No. 60/290,101, filed on May 10, 2001, provisional application No. 60/243,250, filed on Oct. 25, 2000, provisional application No. 60/090,920, filed on Jun. 26, 1998, provisional application No. 60/079,285, filed on Mar. 25, 1998, provisional application No. 60/078,861, filed on Mar. 20, 1998, provisional application No. 60/068,792, filed on Dec. 24, 1997, and provisional application No. 60/071,281, filed on Dec. 17, 1997.

(51) **Int. Cl.**[7] **H05B 37/02**

(52) **U.S. Cl.** **315/362**; 315/312; 362/800

(58) **Field of Search** 315/291, 294, 315/297, 307, 308, 309, 312, 362, 149, 153, 156, 159, 169.3; 362/96, 101, 562, 559, 582, 800

(56) **References Cited**

U.S. PATENT DOCUMENTS

2,909,097	A	10/1959	Alden et al.
3,318,185	A	5/1967	Kott
3,561,719	A	2/1971	Grindle
3,586,936	A	6/1971	McLeroy
3,601,621	A	8/1971	Ritchie
3,643,088	A	2/1972	Osteen et al.
3,746,918	A	7/1973	Drucker et al.
3,818,216	A	6/1974	Larraburu
3,832,503	A	8/1974	Crane
3,845,291	A	10/1974	Portyrata
3,858,086	A	12/1974	Anderson et al.
3,909,670	A	9/1975	Wakamatsu et al.
3,924,120	A	12/1975	Cox, III
3,958,885	A	5/1976	Stockinger et al.
3,974,637	A	8/1976	Bergey et al.
4,001,571	A	1/1977	Martin
4,054,814	A	10/1977	Fegley et al.
4,082,395	A	4/1978	Donato et al.
4,096,349	A	6/1978	Donato
4,241,295	A	12/1980	Williams, Jr.
4,272,689	A	6/1981	Crosby et al.
4,273,999	A	6/1981	Pierpoint

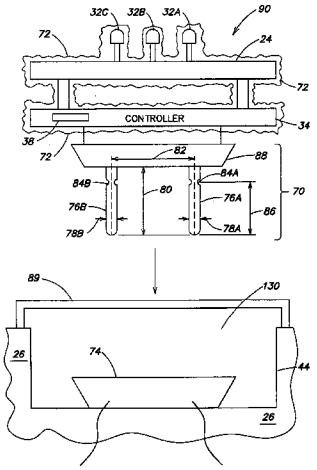

4,298,869 A 11/1981 Okuno
4,305,117 A 12/1981 Evans
4,317,071 A 2/1982 Murad
4,329,625 A 5/1982 Nishizawa et al.
4,367,464 A 1/1983 Kurahashi et al.
4,388,567 A 6/1983 Yamazaki et al.
4,388,589 A 6/1983 Molldrem, Jr.
4,392,187 A 7/1983 Bornhorst
4,394,716 A 7/1983 Campagna et al.
4,420,711 A 12/1983 Takahashi et al.
4,500,796 A 2/1985 Quin
4,564,889 A 1/1986 Bolson
4,616,298 A 10/1986 Bolson
4,622,881 A 11/1986 Rand
4,625,152 A 11/1986 Nakai
4,635,052 A 1/1987 Aoike et al.
4,647,217 A 3/1987 Havel
4,656,398 A 4/1987 Michael et al.
4,668,895 A 5/1987 Schneiter
4,682,079 A 7/1987 Sanders et al.
4,686,425 A 8/1987 Havel
4,687,340 A 8/1987 Havel
4,688,154 A 8/1987 Nilssen
4,688,869 A 8/1987 Kelly
4,695,769 A 9/1987 Schweickardt
4,701,669 A 10/1987 Head et al.
4,704,660 A 11/1987 Robbins
4,705,406 A 11/1987 Havel
4,707,141 A 11/1987 Havel
4,727,289 A 2/1988 Uchida
4,740,882 A 4/1988 Miller
4,753,148 A 6/1988 Johnson
4,771,274 A 9/1988 Havel
4,780,621 A 10/1988 Bartleucci et al.
4,780,917 A 11/1988 Hancock
4,818,072 A 4/1989 Mohebban
4,837,565 A 6/1989 White
4,843,627 A 6/1989 Stebbins
4,844,333 A 7/1989 Davis et al.
4,845,481 A 7/1989 Havel
4,845,745 A 7/1989 Havel
4,863,223 A 9/1989 Weissenbach et al.
4,874,320 A 10/1989 Freed et al.
4,887,074 A 12/1989 Simon et al.
4,920,465 A 4/1990 Sargent
4,922,154 A 5/1990 Cacoub
4,934,852 A 6/1990 Havel
4,962,687 A 10/1990 Belliveau et al.
4,965,561 A 10/1990 Havel
4,973,835 A 11/1990 Kurosu et al.
4,979,081 A 12/1990 Leach et al.
4,980,806 A 12/1990 Taylor et al.
4,992,704 A 2/1991 Stinson
5,003,227 A 3/1991 Nilssen
5,008,595 A 4/1991 Kazar
5,010,459 A 4/1991 Taylor et al.
5,012,457 A 4/1991 Mitchell et al.
5,027,262 A 6/1991 Freed
5,034,807 A 7/1991 Von Kohorn
5,072,216 A 12/1991 Grange
5,078,039 A 1/1992 Tulk et al.
5,083,063 A 1/1992 Brooks
5,117,233 A 5/1992 Hamos et al.
5,122,936 A 6/1992 Guthrie
5,126,634 A 6/1992 Johnson
5,128,595 A 7/1992 Hara
5,134,387 A 7/1992 Smith et al.
5,142,199 A 8/1992 Elwell
5,154,641 A 10/1992 McLaughlin
5,164,715 A 11/1992 Kashiwabara et al.
5,169,236 A 12/1992 Iest
5,171,429 A 12/1992 Yasuo
5,184,114 A 2/1993 Brown
5,194,854 A 3/1993 Havel
5,209,560 A 5/1993 Taylor et al.
5,225,765 A 7/1993 Callahan et al.
5,226,723 A 7/1993 Chen
5,254,910 A 10/1993 Yang
5,256,948 A 10/1993 Boldin et al.
5,267,129 A 11/1993 Anderson
5,282,121 A 1/1994 Bornhorst et al.
5,294,865 A 3/1994 Haraden
5,301,090 A 4/1994 Hed
5,307,295 A 4/1994 Taylor et al.
5,329,431 A 7/1994 Taylor et al.
5,350,977 A 9/1994 Hamamoto et al.
5,357,170 A 10/1994 Luchaco et al.
5,371,618 A 12/1994 Tai et al.
5,374,876 A 12/1994 Horibata et al.
5,388,357 A 2/1995 Malita
5,402,702 A 4/1995 Hata
5,404,282 A 4/1995 Klinke et al.
5,406,176 A 4/1995 Sugden
5,410,328 A 4/1995 Yoksza et al.
5,412,284 A 5/1995 Moore et al.
5,412,552 A 5/1995 Fernandes
5,420,482 A 5/1995 Phares
5,421,059 A 6/1995 Leffers, Jr.
5,432,408 A 7/1995 Matsuda et al.
5,436,535 A 7/1995 Yang
5,461,188 A 10/1995 Drago et al.
5,463,280 A 10/1995 Johnson
5,465,144 A 11/1995 Parker et al.
5,489,827 A 2/1996 Xia
5,491,402 A 2/1996 Small
5,504,395 A 4/1996 Johnson et al.
5,530,322 A 6/1996 Ference et al.
5,539,624 A 7/1996 Dougherty
5,545,950 A 8/1996 Cho
5,561,346 A 10/1996 Byrne
5,569,371 A 10/1996 Perling
5,575,459 A 11/1996 Anderson
5,575,554 A 11/1996 Guritz
5,592,051 A 1/1997 Korkala
5,636,303 A 6/1997 Che et al.
5,640,061 A 6/1997 Bornhorst et al.
5,642,129 A 6/1997 Zavracky et al.
5,673,059 A 9/1997 Zavracky et al.
5,680,730 A 10/1997 Epple
5,701,058 A 12/1997 Roth
5,721,471 A 2/1998 Begemann et al.
5,725,761 A 3/1998 Phillips
5,734,590 A 3/1998 Tebbe
5,751,118 A 5/1998 Mortimer
5,752,766 A 5/1998 Bailey et al.
5,769,527 A 6/1998 Taylor et al.
5,803,579 A 9/1998 Turnbull et al.
5,808,689 A 9/1998 Small
5,821,695 A 10/1998 Vilanilam et al.
5,823,431 A 10/1998 Pierce
5,848,837 A 12/1998 Gustafson
5,850,126 A 12/1998 Kanbar
5,851,063 A 12/1998 Doughty et al.
5,852,658 A 12/1998 Knight et al.
RE36,030 E 1/1999 Nadeau
5,859,508 A 1/1999 Ge et al.
5,896,010 A 4/1999 Mikolajczak et al.
5,912,653 A 6/1999 Fitch
5,924,784 A 7/1999 Chliwnyj et al.
5,927,845 A 7/1999 Gustafson et al.
5,946,209 A 8/1999 Eckel et al.
5,952,680 A 9/1999 Strite

5,959,547	A	9/1999	Tubel et al.
5,963,185	A	10/1999	Havel
5,974,553	A	10/1999	Gandar
6,008,783	A	12/1999	Kitagawa et al.
6,016,038	A	1/2000	Mueller et al.
6,018,237	A	1/2000	Havel
6,021,960	A	2/2000	Kehat
6,025,550	A	2/2000	Kato
6,030,108	A	2/2000	Ishiharada et al.
6,031,343	A	2/2000	Recknagel et al.
6,036,333	A	3/2000	Spiller
6,068,383	A	5/2000	Robertson et al.
6,072,280	A	6/2000	Allen
6,095,661	A	8/2000	Lebens et al.
6,097,352	A	8/2000	Zavracky et al.
6,132,072	A	10/2000	Turnbull et al.
6,135,604	A	10/2000	Lin
6,150,774	A	11/2000	Mueller et al.
6,166,496	A	12/2000	Lys et al.
6,175,201	B1	1/2001	Sid
6,183,086	B1	2/2001	Neubert
6,184,628	B1	2/2001	Ruthenberg
6,196,471	B1	3/2001	Ruthenberg
6,211,626	B1	4/2001	Lys et al.
6,215,409	B1	4/2001	Blach
6,250,774	B1	6/2001	Begemann et al.
6,292,901	B1	9/2001	Lys et al.
6,340,868	B1	1/2002	Lys et al.
6,459,919	B1	10/2002	Lys et al.
2001/0033488	A1	10/2001	Chliwnyj et al.

FOREIGN PATENT DOCUMENTS

AU	6 267 9		12/1996
CA	2 178 432		12/1996
EP	0495305	A2	7/1992
EP	0534710	B1	1/1996
EP	0752632	A2	1/1997
EP	0752632	A3	8/1997
EP	0823812	A2	2/1998
EP	0935234	A1	8/1999
EP	0942631	A2	9/1999
EP	1020352	A2	7/2000
EP	1113215	A2	7/2001
FR	88 17359		12/1998
GB	2045098	A	10/1980
GB	2135536	A	8/1984
GB	2176042	A	12/1986
JP	06043830		2/1994
JP	7-39120		7/1995
JP	8-106264		4/1996
JP	9 320766		12/1997
WO	WO 89/05086		6/1989
WO	WO 94/18809		8/1994
WO	WO 95/13498		5/1995
WO	WO 96/41098		12/1996

OTHER PUBLICATIONS

* "LM117/LM317A/LM317 3–Terminal Adjustable Regulator", National Semiconductor Corporation, May 1997, pp. 1–20.

* "DS96177 RS–485 / RS–422 Differential Bus Repeater", National Semiconductor Corporation, Feb. 1996, pp. 1–8.

* "DS2003 / DA9667 / DS2004 High Current / Voltage Darlington Drivers", National Semiconductor Corporation, Dec. 1995, pp. 1–8.

* "LM140A / LM140 / LM340A / LM7800C Series 3—Terminal Positive Regulators", National Semiconductor Corporation, Jan. 1995, pp. 1–14.

* High End Systems, Inc., Trackspot User Manual, Aug. 1997, Excerpts (Cover, Title page, pp. ii through iii and 2–13 through 2–14).

* Artistic License, AL4000 DMX512 Processors, Revision 3.4, Jun. 2000, Excerpts (Cover, pp. 7,92 through 102).

* Artistic License, Miscellaneous Drawings (3 sheets) Jan. 12, 1995.

* Artistic License, Miscellaneous Documents (2 sheets Feb. 1995 and Apr. 1996).

* Newnes's Dictionary of Electronics, Fourth Edition, S.W. Amos, et al., Preface to First Edition, pp. 278–279.

*"http://www.luminus.cx/projects/chaser", (Nov. 13, 2000), pp. 1–16.

Co–pending U.S. patent application, Ser. No. 10/040,253, filed Oct. 25, 2001, George G. Mueller, et al., "Methods and Apparatus for Illumination of Liquids".

Co–pending U.S. patent application, Ser. No. 10/040,291, filed Oct. 25, 2001, Frederick M. Morgan, et al., "Methods and Apparatus for Remotely Controlled Illumination of Liquids".

Co–pending U.S. patent application, Ser. No. 10/040,291, filed Oct. 25, 2001, Frederick M. Morgan, et al., "Methods and Apparatus for Remotely Controlled Illumination of Liquids".

Co–pending U.S. patent application, Ser. No. 10/045,629, filed Oct. 25, 2001, Frederick M. Morgan, et al., "Methods and Apparatus for Controlling Illumination".

Co–pending U.S. patent application, Ser. No. 10/040,252, filed Oct. 25, 2001, Frederick M. Morgan, et al., "Light Fixtures for Illumination of Liquids".

Primary Examiner—Haissa Philogene
(74) *Attorney, Agent, or Firm*—Lowrie, Lando & Anastasi, LLP

(57) **ABSTRACT**

Methods and apparatus for sensor responsive illumination of liquids in a variety of environments. In one example, multi-color LED-based sensor responsive light sources are employed to achieve a wide range of enhanced lighting effects in liquids. In another example, a pool or spa is illuminated by one or more multi-color sensor responsive light sources that may be employed as individually and independently controllable devices, or coupled together to form a networked lighting system to provide a variety of programmable and/or coordinated color illumination effects in the pool or spa environment.

79 Claims, 20 Drawing Sheets

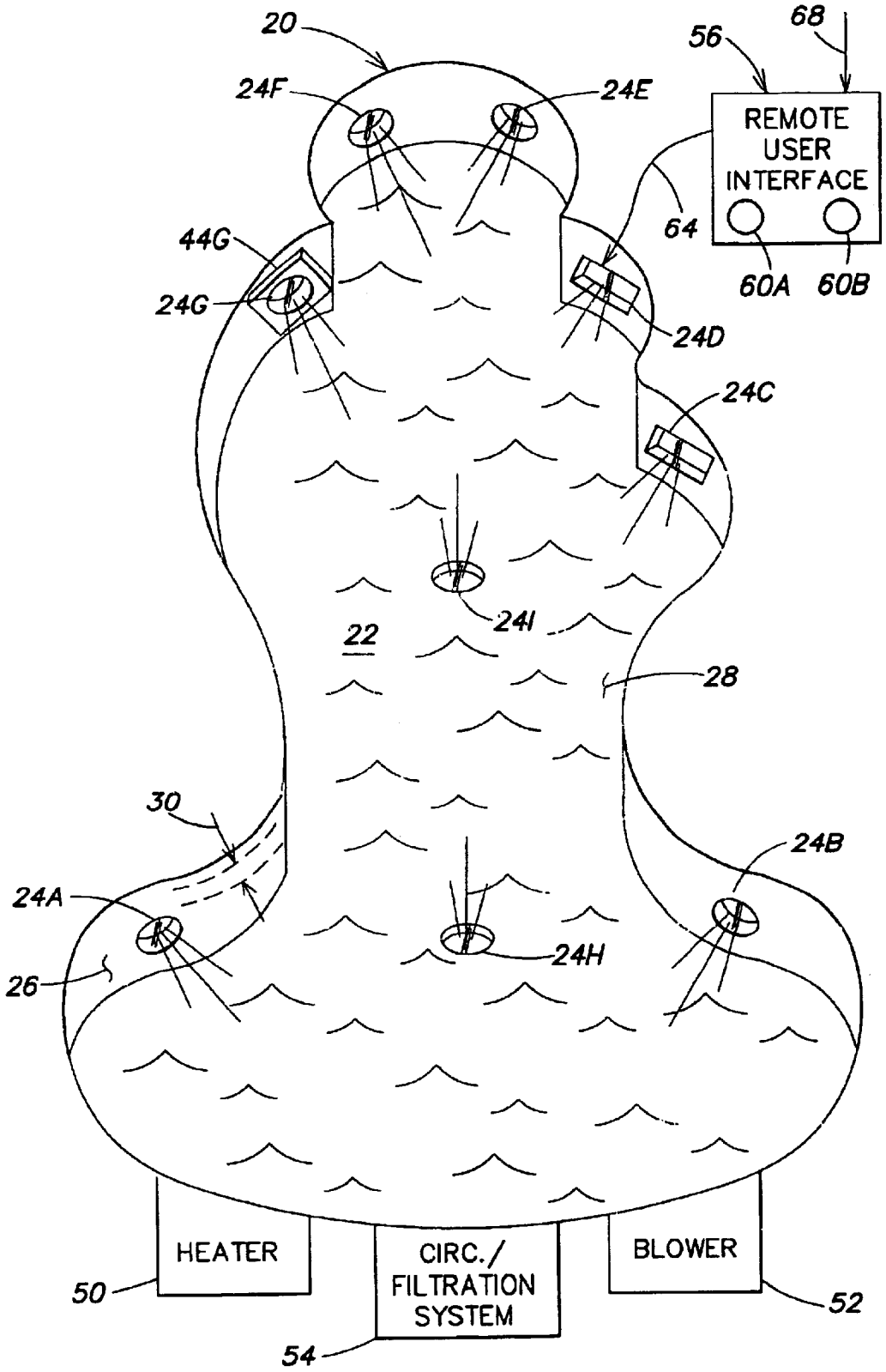
20
56
68
REMOTE USER INTERFACE
60A
60B
64
24F
24E
44G
24G
24D
24C
24I
22
28
30
24B
24A
24H
26
HEATER
CIRC./ FILTRATION SYSTEM
BLOWER
50
52
54

FIG. 1

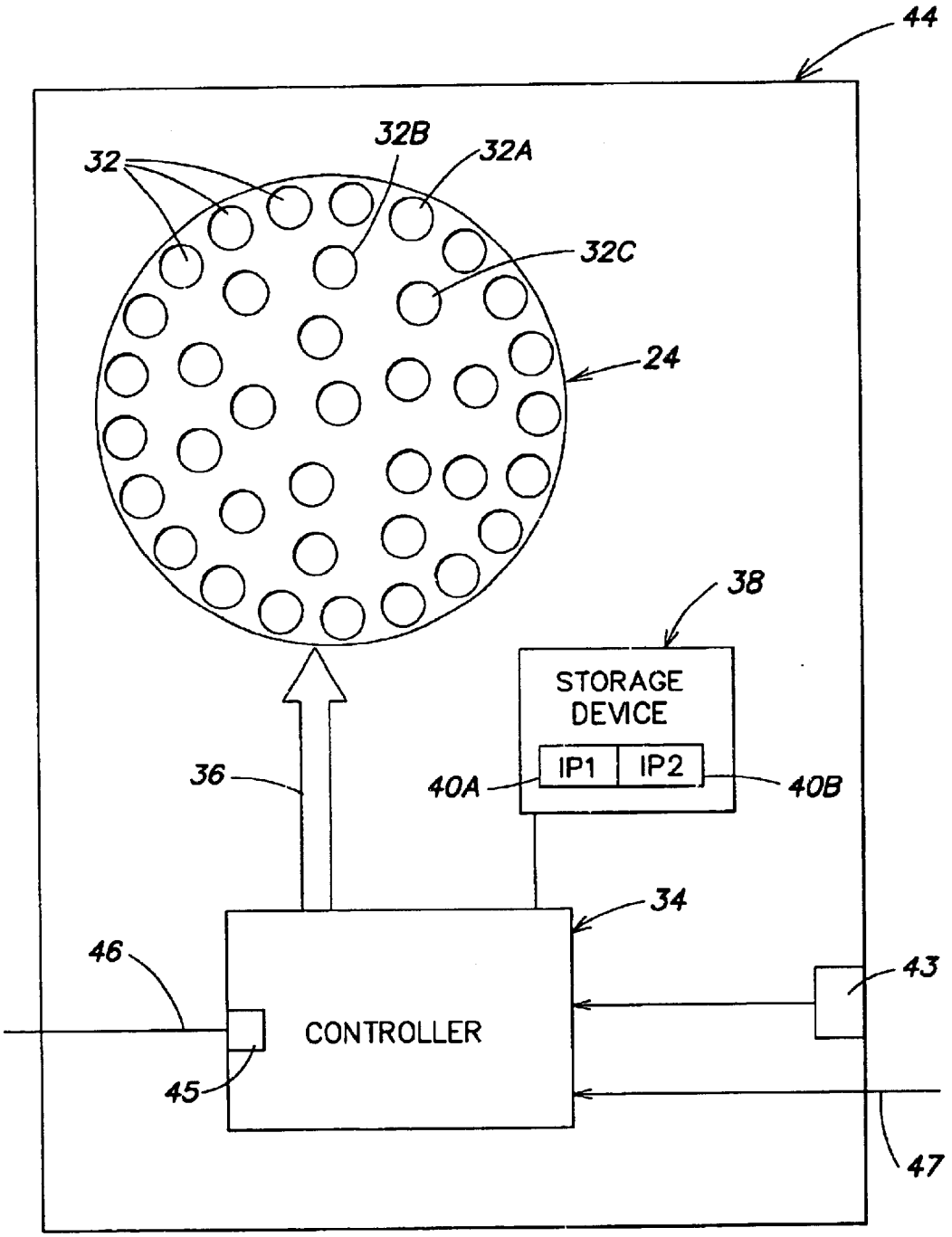
44
32
32B
32A
32C
24
38
STORAGE DEVICE
IP1
IP2
40A
40B
36
34
46
43
CONTROLLER
45
47

FIG. 2

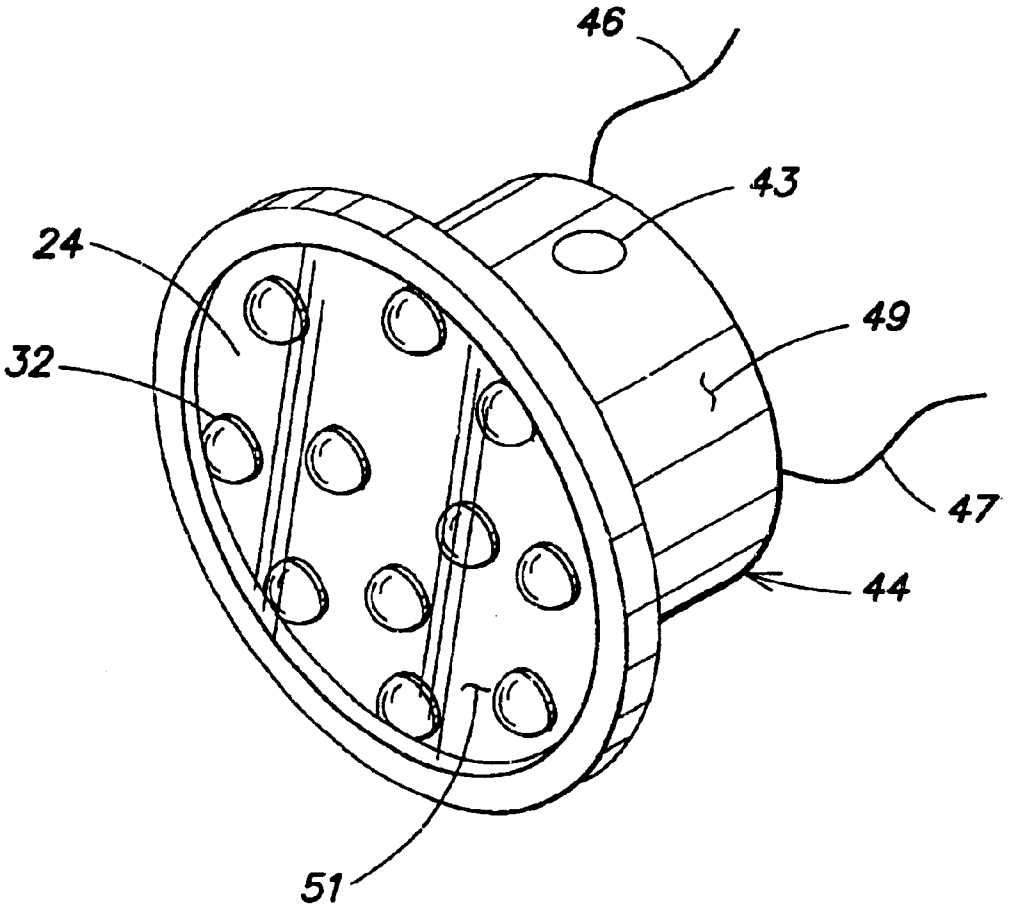

FIG. 3

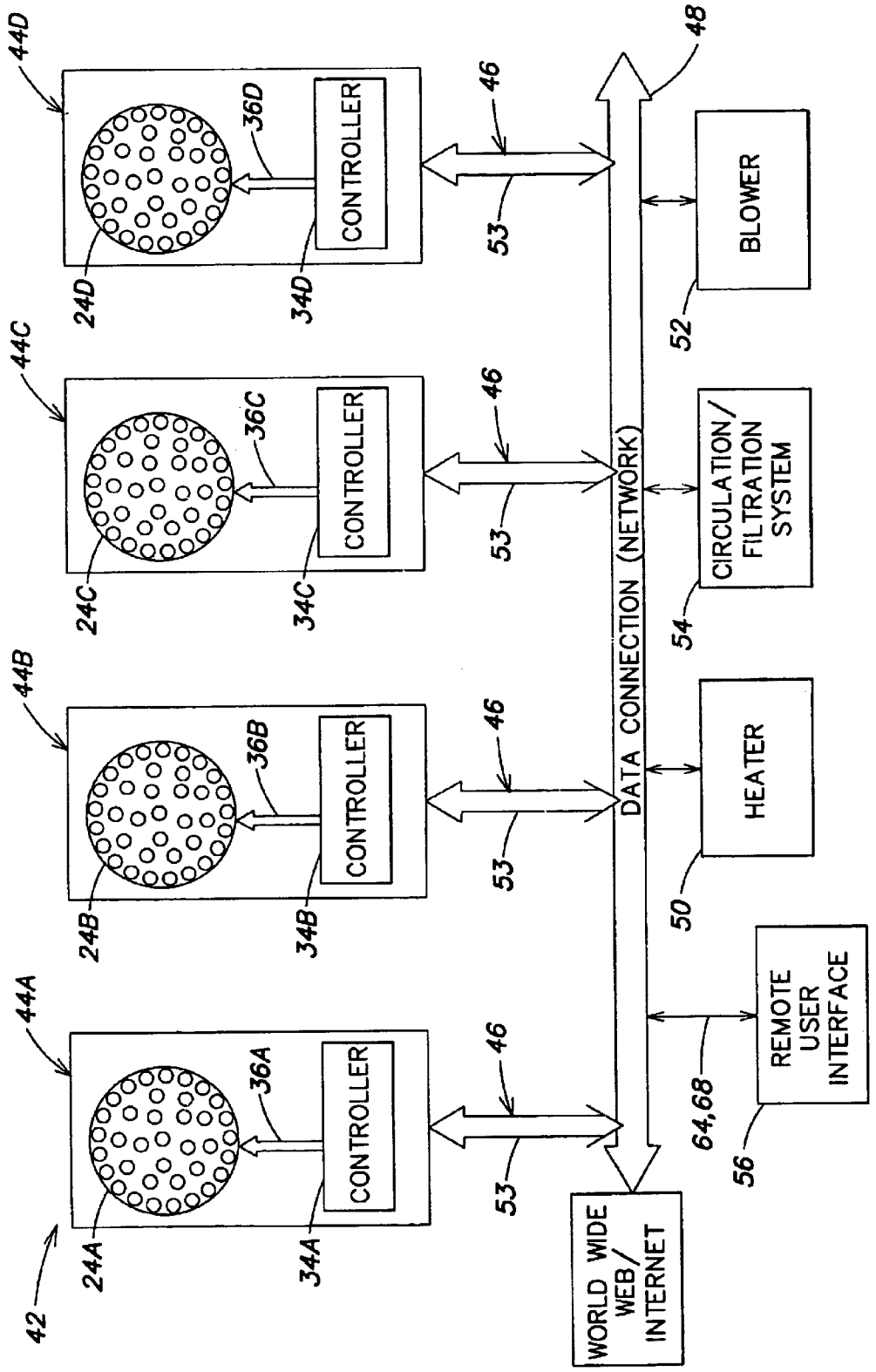
44D
36D
CONTROLLER
24D
34D
44C
36C
CONTROLLER
24C
34C
44B
36B
CONTROLLER
24B
34B
44A
36A
CONTROLLER
24A
34A
42
46
53
DATA CONNECTION (NETWORK)
48
BLOWER
52
CIRCULATION/ FILTRATION SYSTEM
54
HEATER
50
REMOTE USER INTERFACE
56
64,68
WORLD WIDE WEB/ INTERNET

FIG. 4

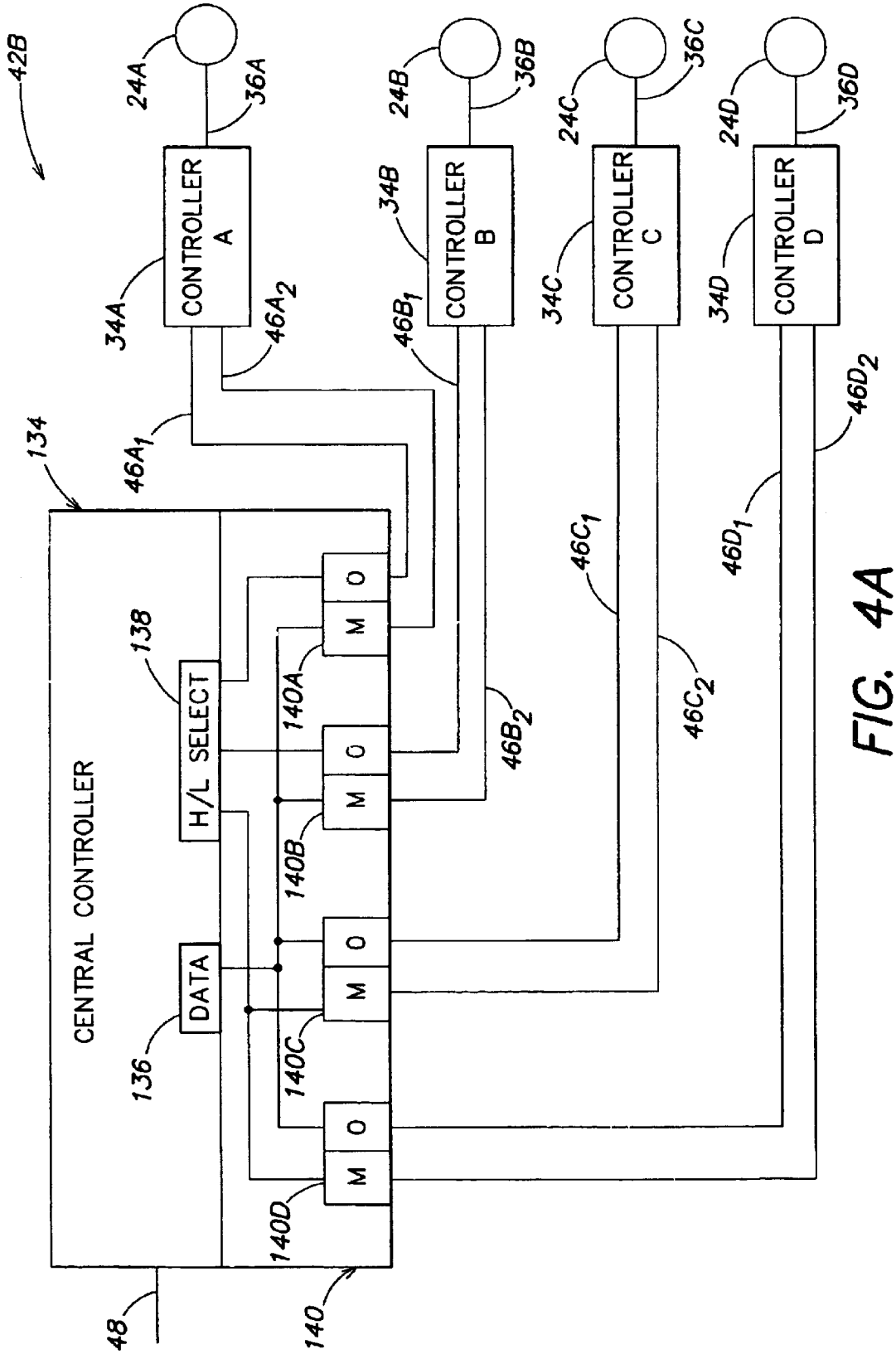
42B
24A
36A
24B
36B
24C
36C
24D
36D
CONTROLLER A
CONTROLLER B
CONTROLLER C
CONTROLLER D
34A
34B
34C
34D
46A2
46A1
46B1
46B2
46C1
46C2
46D1
46D2
134
CENTRAL CONTROLLER
H/L SELECT
DATA
138
136
140A
140B
140C
140D
M O
M O
M O
M O
48
140

FIG. 4A

CONTROLLER	MODE (M)	OPTION (O)
A	DATA	LOGIC HIGH
B	DATA	LOGIC LOW
C	LOGIC HIGH	DATA
D	LOGIC LOW	DATA

FIG. 4B

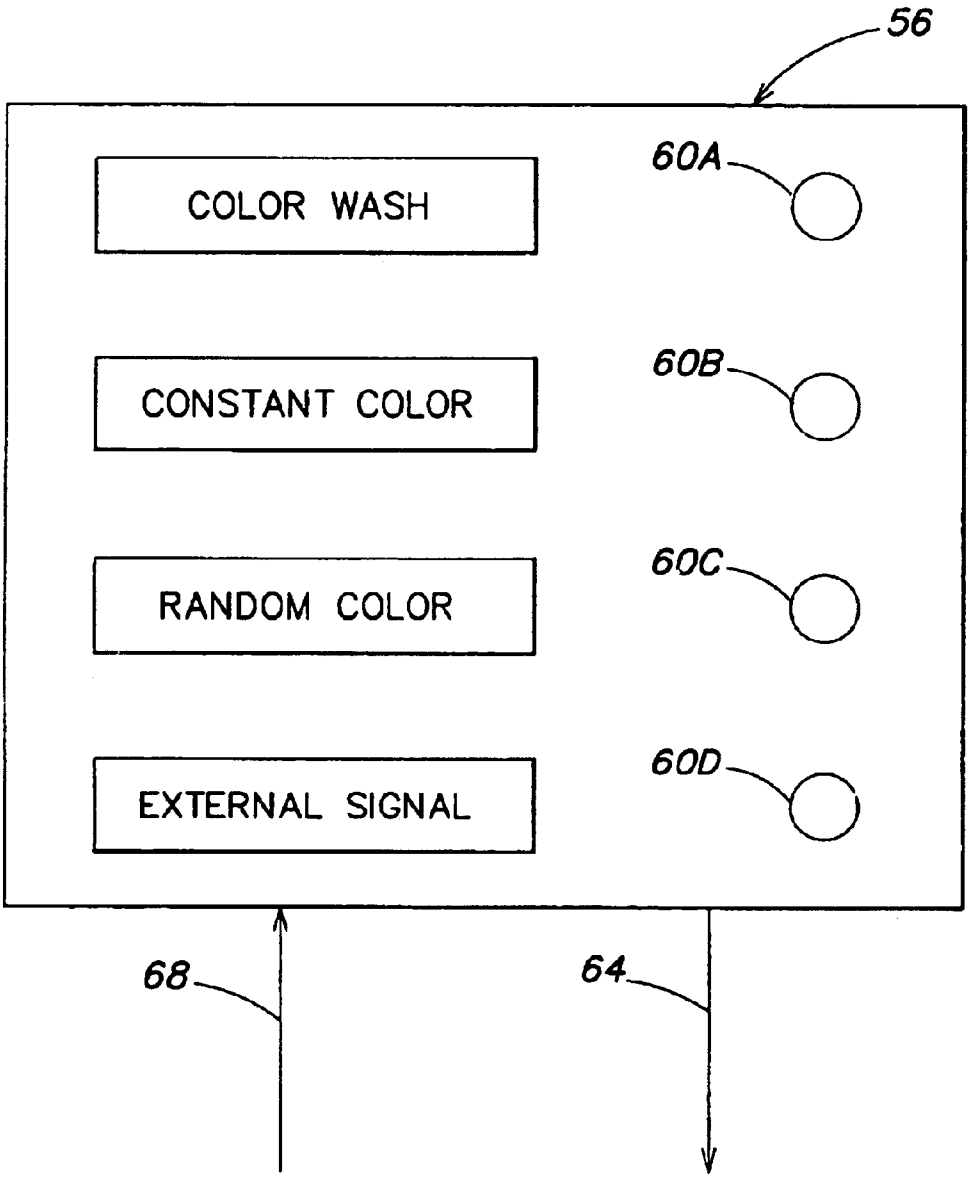
56
COLOR WASH
60A
CONSTANT COLOR
60B
RANDOM COLOR
60C
EXTERNAL SIGNAL
60D
68
64

FIG. 5

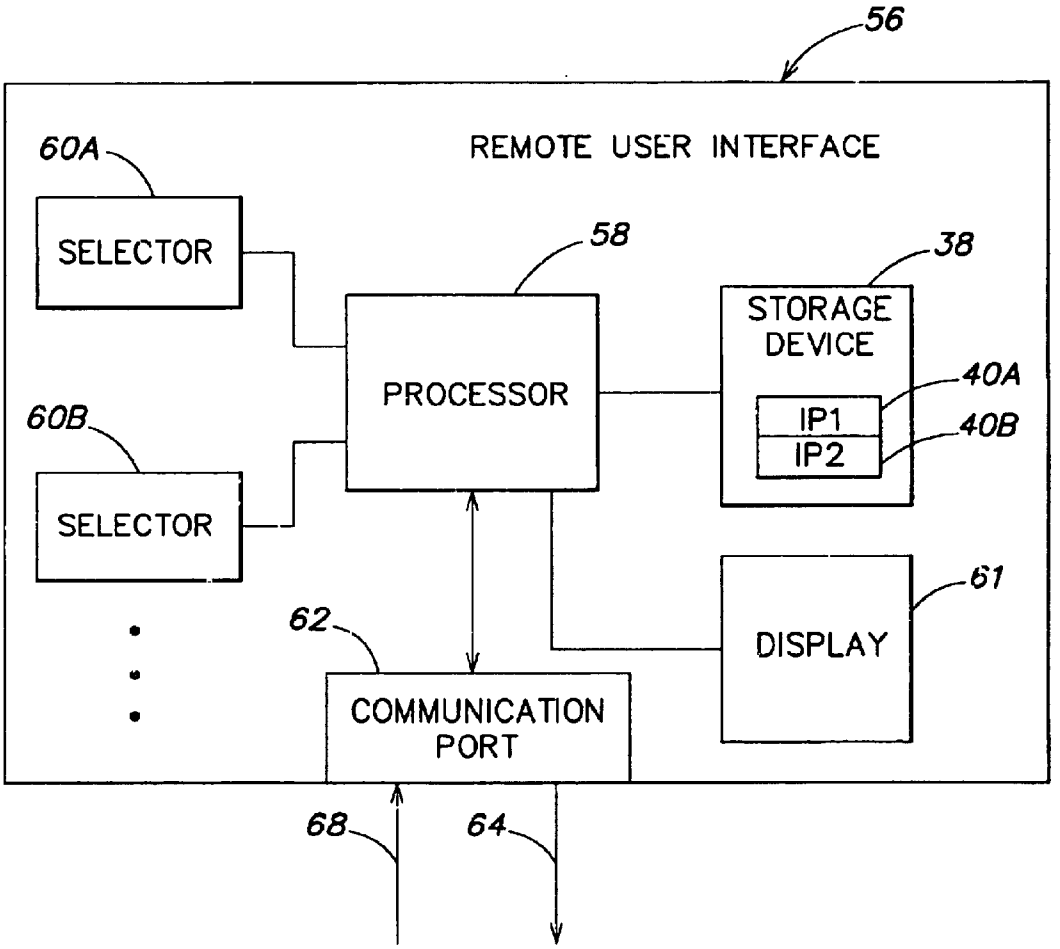
56
REMOTE USER INTERFACE
60A
SELECTOR
58
38
STORAGE DEVICE
PROCESSOR
40A
IP1
IP2
40B
60B
SELECTOR
61
62
DISPLAY
COMMUNICATION PORT
68
64

FIG. 6

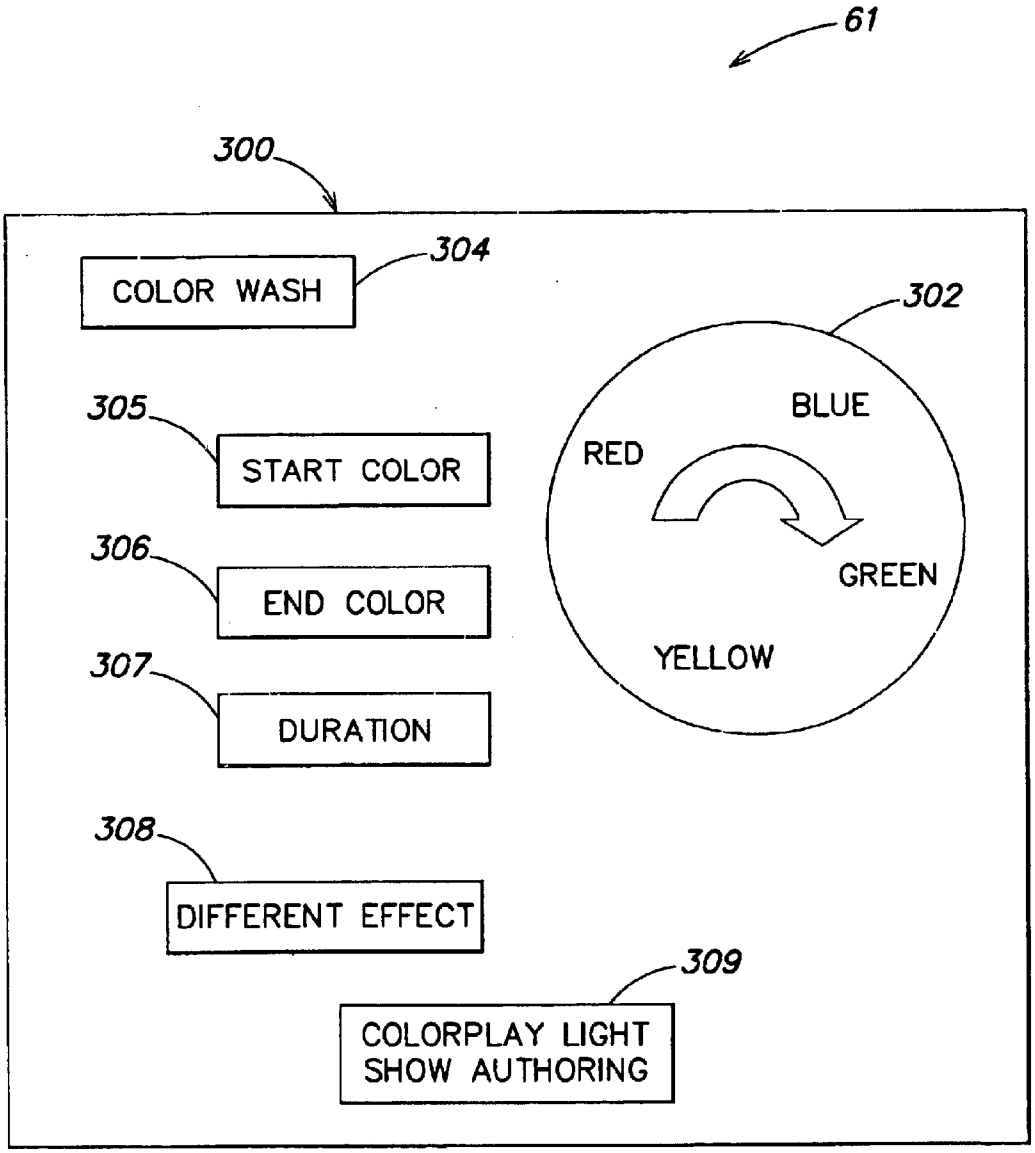
61
300
COLOR WASH
304
302
BLUE
RED
GREEN
YELLOW
305
START COLOR
306
END COLOR
307
DURATION
308
DIFFERENT EFFECT
309
COLORPLAY LIGHT SHOW AUTHORING

FIG. 7

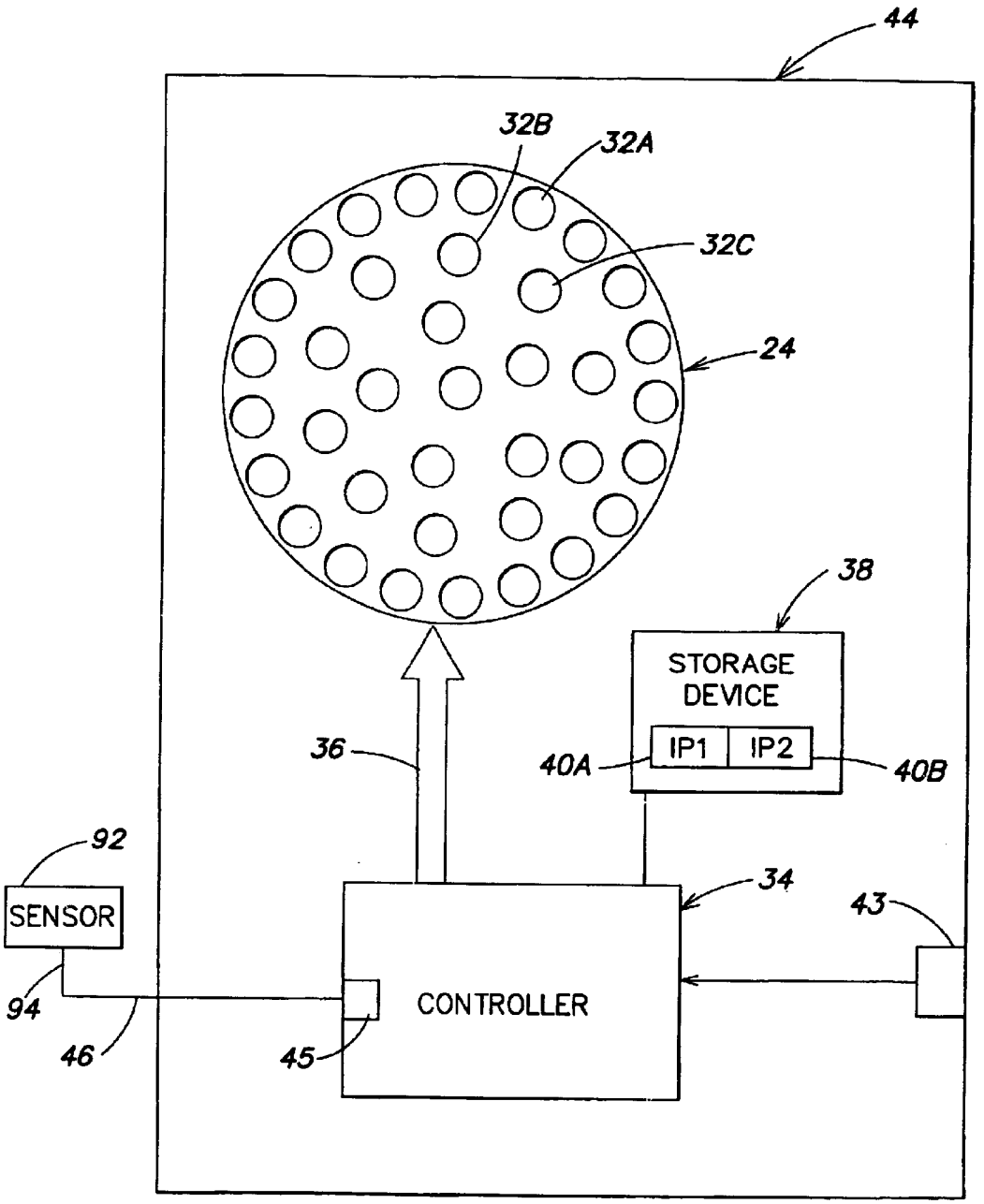
44
32B
32A
32C
24
38
STORAGE DEVICE
IP1
IP2
40A
40B
36
92
SENSOR
34
43
94
CONTROLLER
46
45

FIG. 8

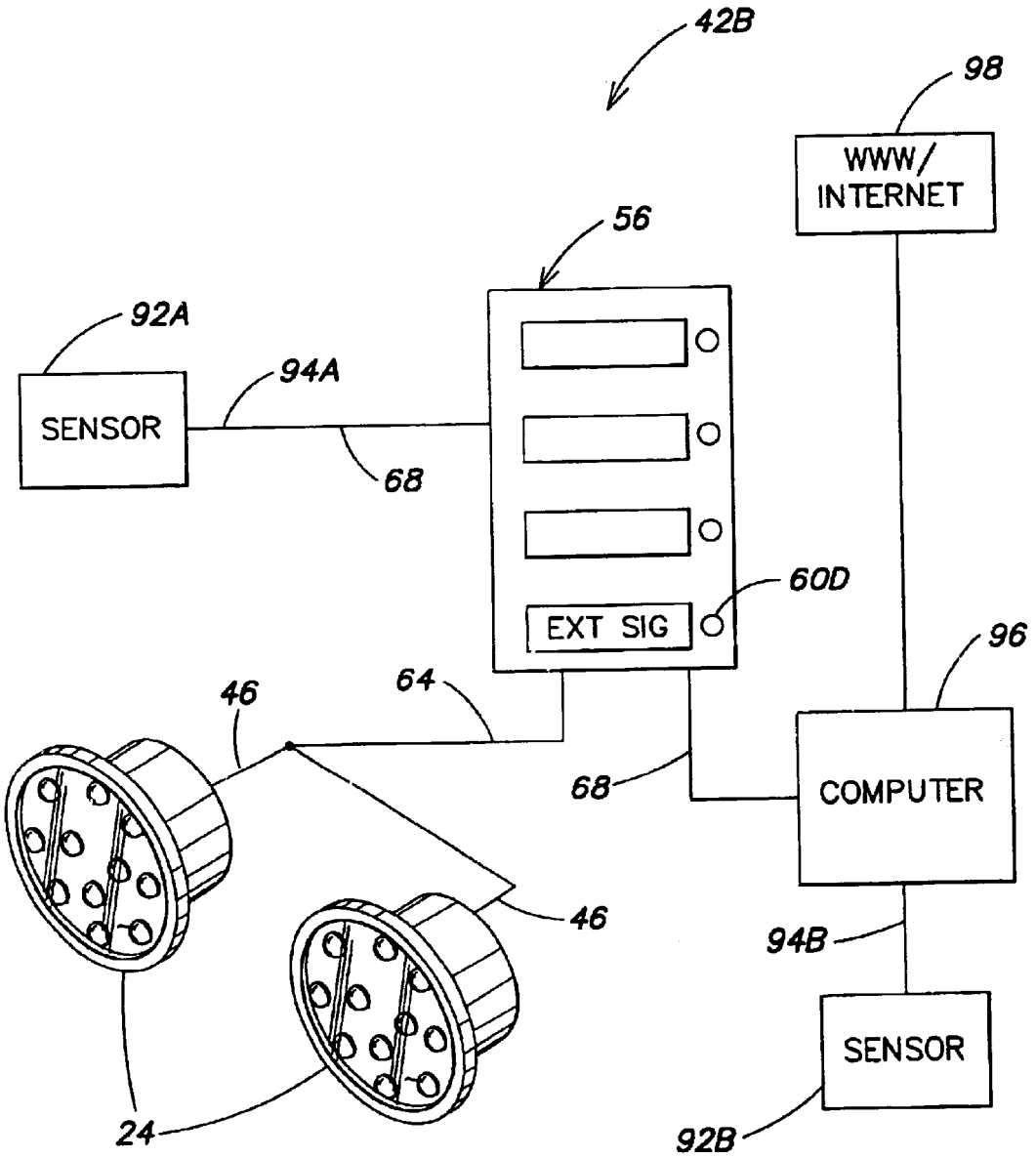
42B
98
WWW/
INTERNET
56
92A
94A
SENSOR
68
60D
EXT SIG
96
46
64
68
COMPUTER
46
94B
SENSOR
24
92B

FIG. 9

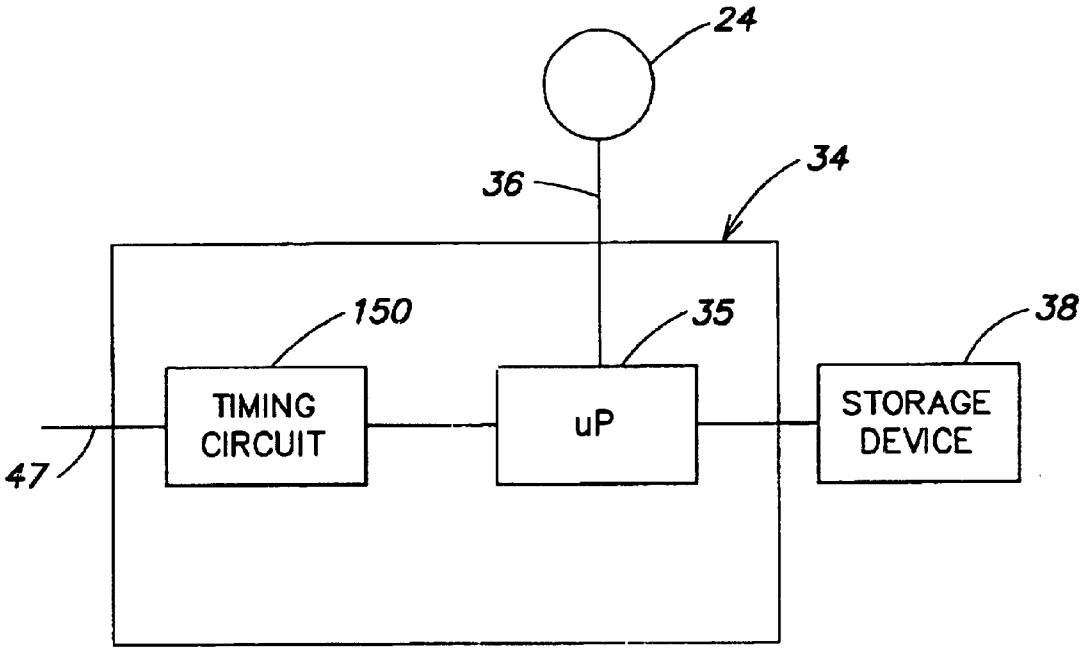

FIG. 10

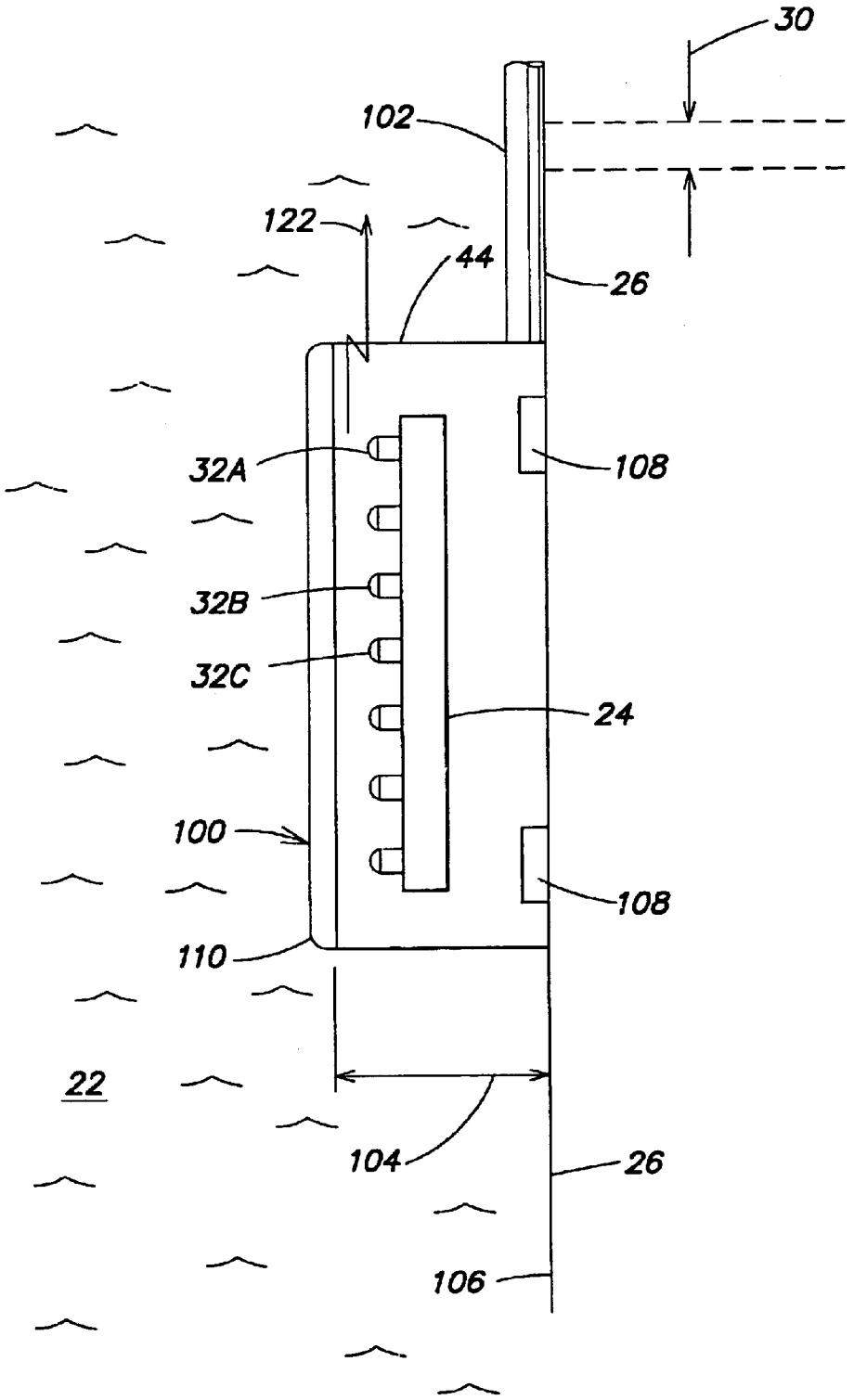

FIG. 11

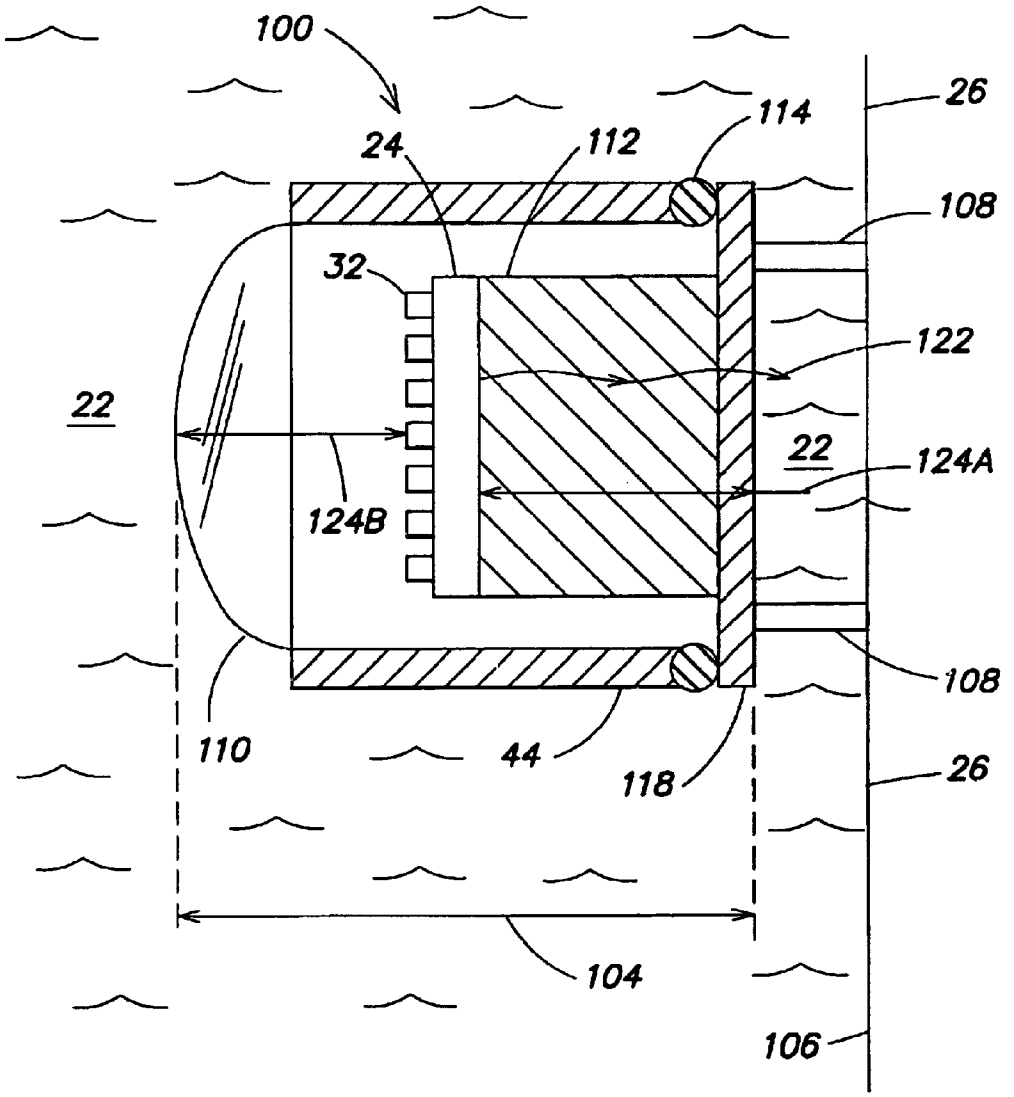
100
24
112
114
26
108
32
122
22
22
124A
124B
108
110
44
118
26
104
106

FIG. 12

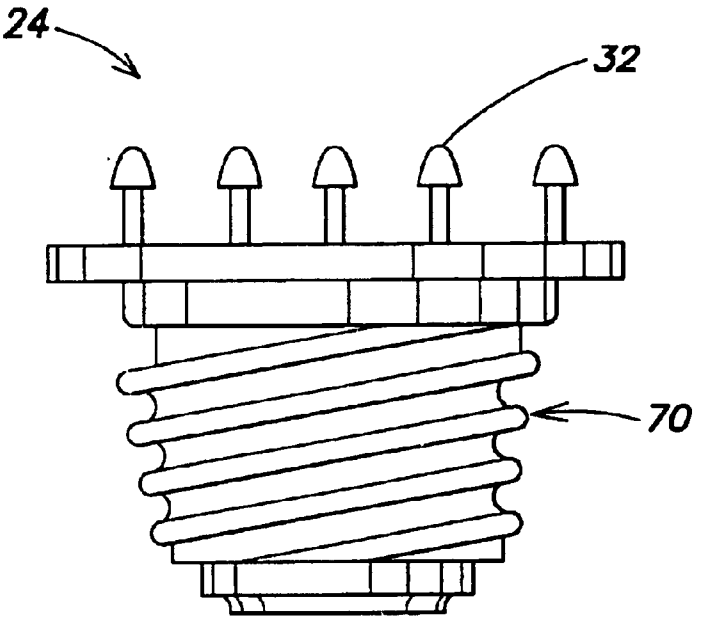

FIG. 13

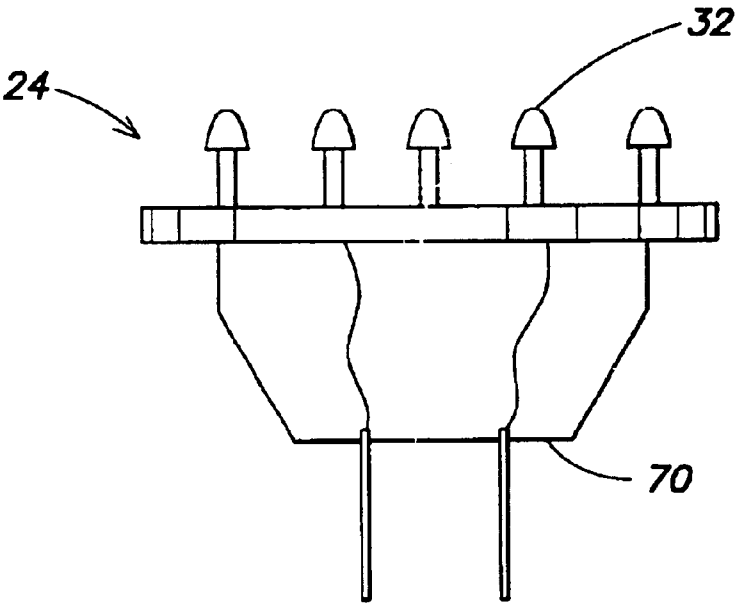

FIG. 14

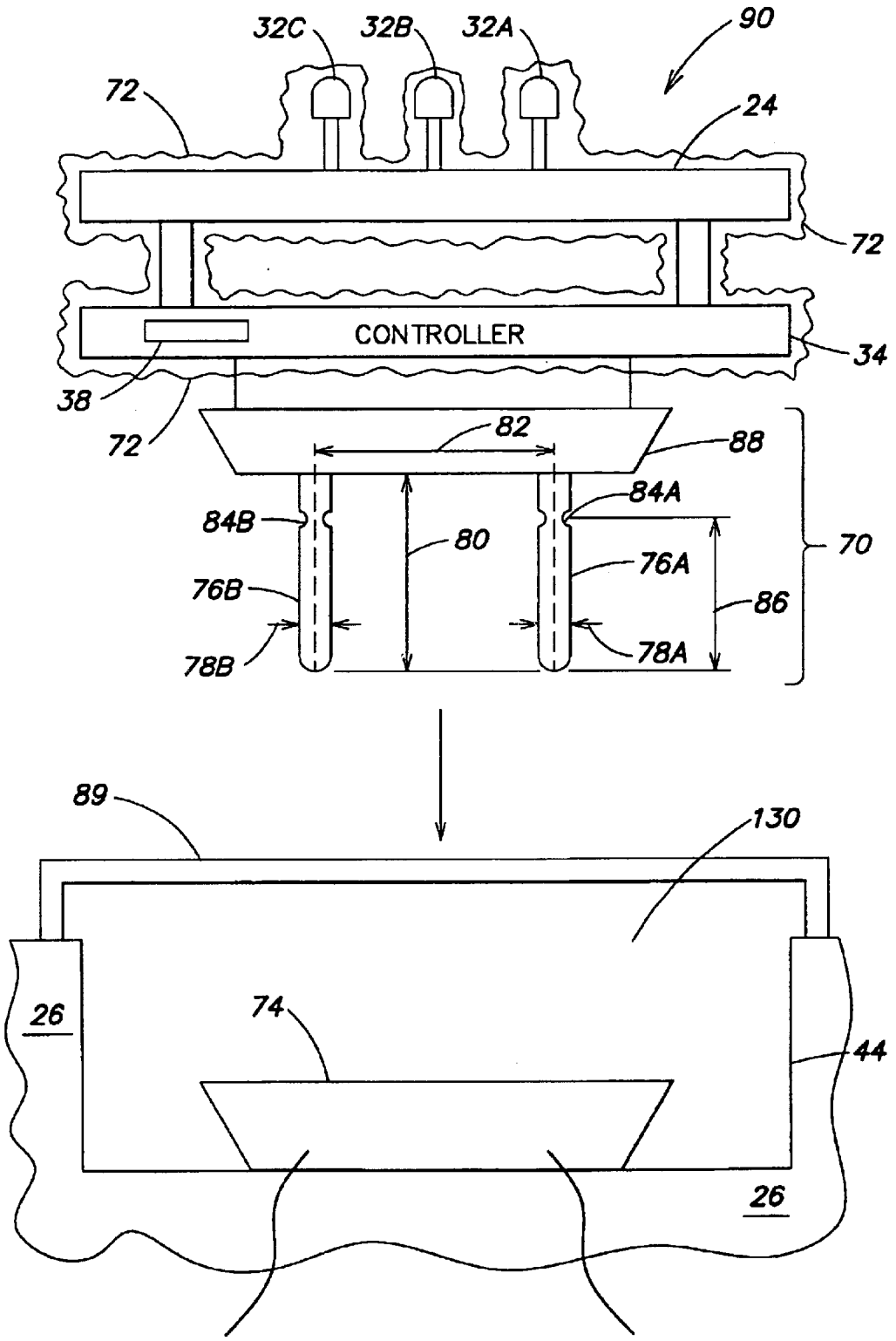
32C
32B
32A
90
72
24
72
CONTROLLER
34
38
72
82
88
84A
84B
80
70
76A
76B
86
78B
78A
89
130
26
74
44
26

FIG. 15

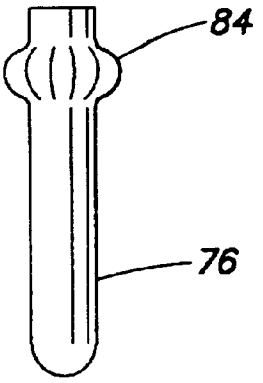

FIG. 16A

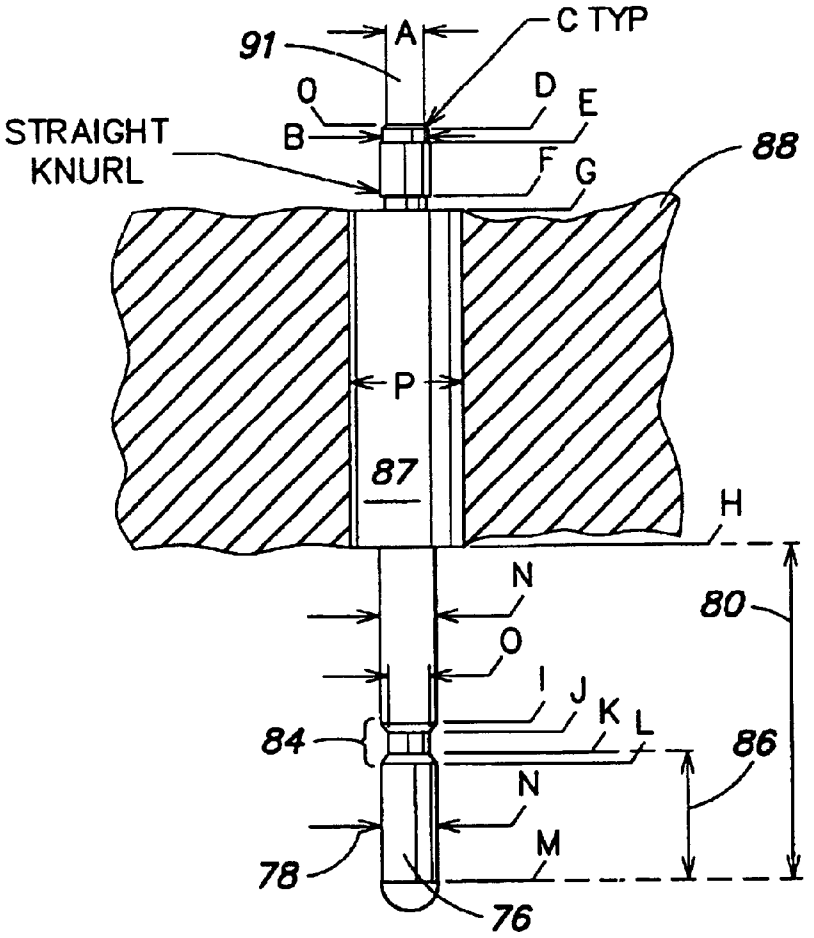

FIG. 16B

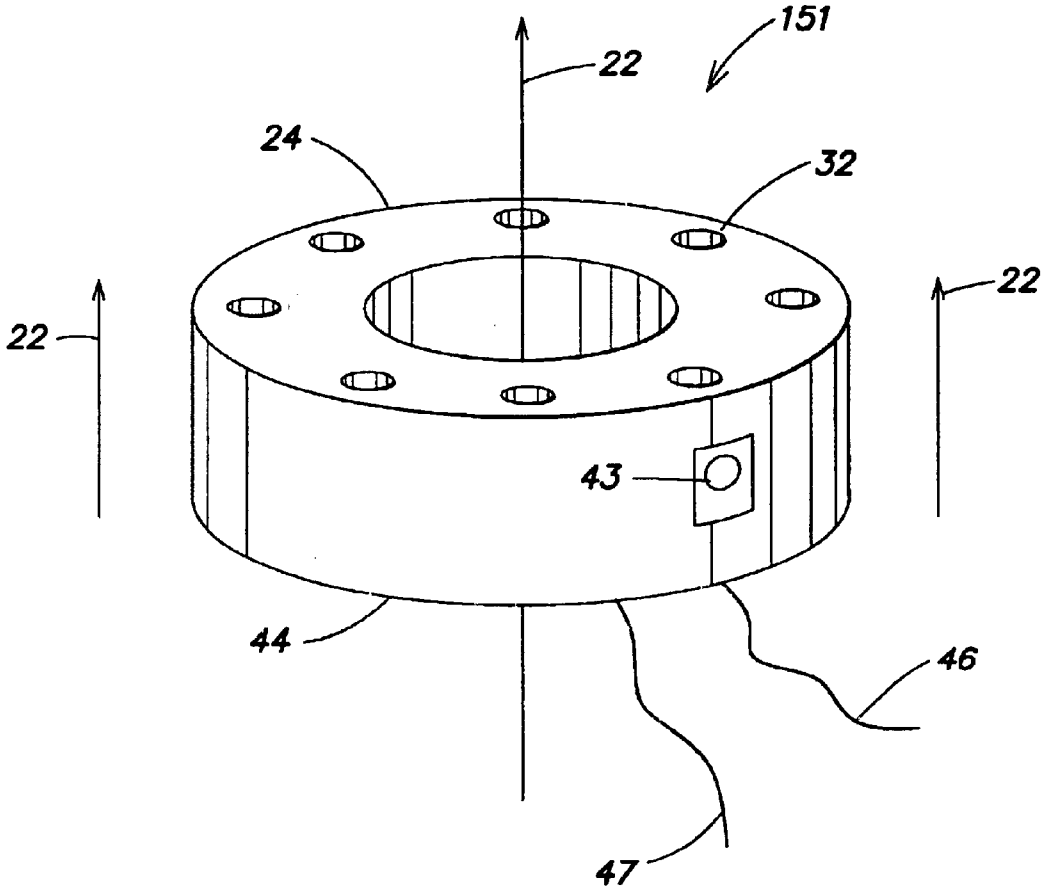

FIG. 17

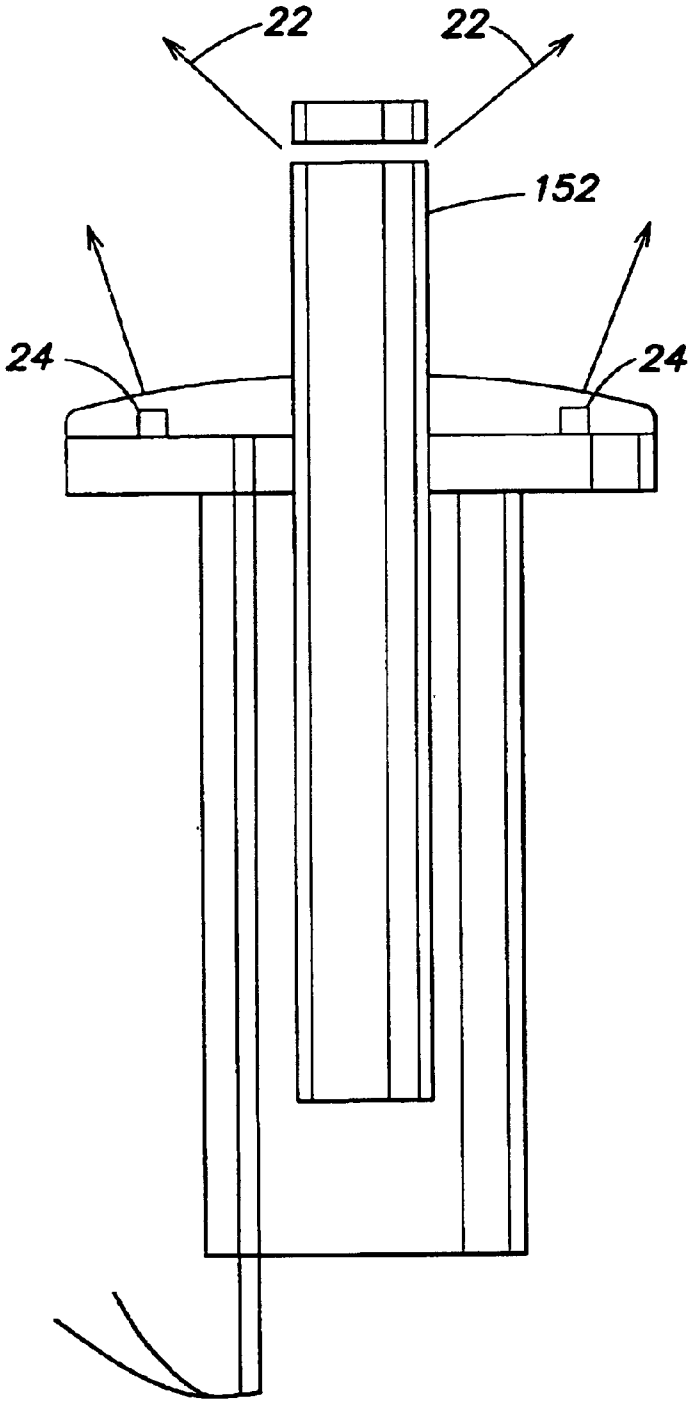

FIG. 18

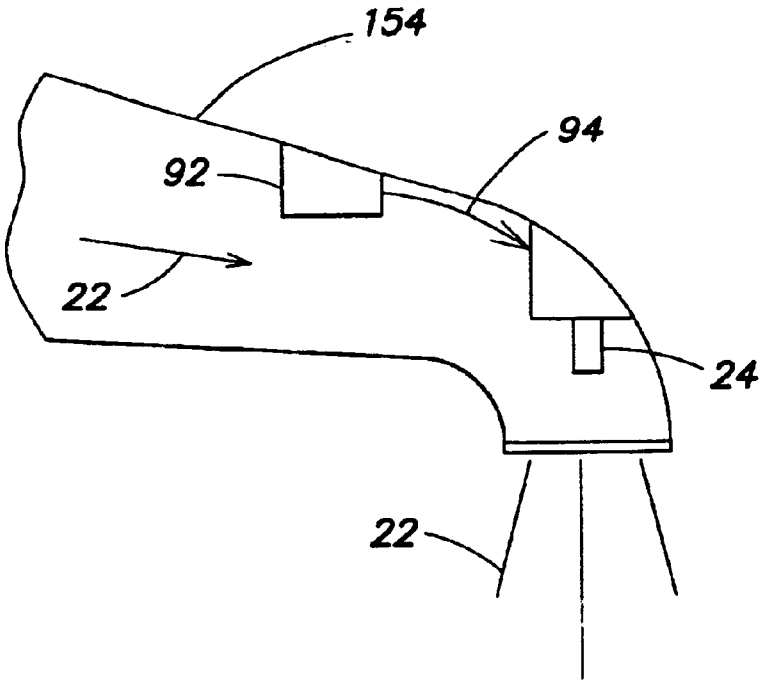

FIG. 19

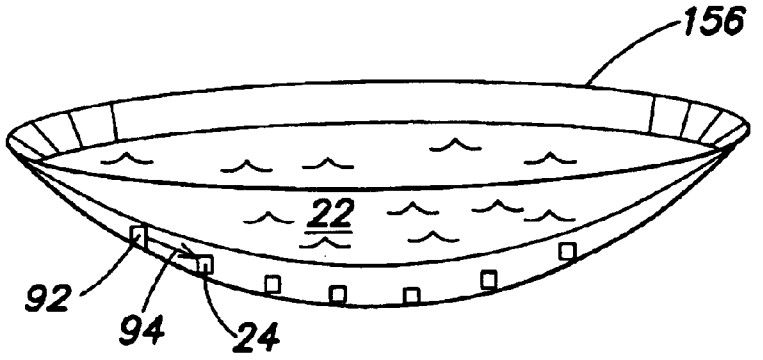

FIG. 20

METHODS AND APPARATUS FOR SENSOR RESPONSIVE ILLUMINATION OF LIQUIDS

CROSS REFERENCES TO RELATED APPLICATIONS

This application claims the benefit under 35 U.S.C. §119 (e) of the following U.S. provisional applications:

Serial No. 60/243,250, filed Oct. 25, 2000, entitled ILLUMINATION OF LIQUIDS;

Serial No. 60/296,377, filed Jun. 6, 2001, entitled SYSTEMS AND METHODS FOR CONTROLLING LIGHTING SYSTEMS;

Serial No. 60/297,828, filed Jun. 13, 2001, entitled SYSTEMS AND METHODS FOR CONTROLLING LIGHTING SYSTEMS; and

Serial No. 60/290,101, flied May 10, 2001, entitled LIGHTING SYNCHRONIZATION WITHOUT A NET WORK.

This application also claims the benefit under 35 U.S.C. §120 as a continuation-in-part (CIP) of U.S. non-provisional application Ser. No. 09/669,121, filed Sep. 25, 2000, entitled MULTICOLORED LEE) LIGHTING METHOD AND APPARATUS, which is a continuation of U.S. Ser. No. 09/425,770, filed Oct. 22, 1999, now U.S. Pat. No. 6,150,774, which is a continuation of U.S. Ser. No. 08/920,156, filed Aug. 26, 1997 now U.S. Pat. No. 6,016,038.

This application also claims the benefit under 35 U.S.C. §120 as a continuation-in-part (CIP) of the following U.S. non-provisional applications:

Ser. No. 09/215,624, filed Dec. 17, 1998, now U.S. Pat. No. 6,528,954 entitled SMART LIGHT BULB, which claims priority to the following U.S. Provisional Applications:

Serial No. 60/071,281, filed Dec. 17, 1997, entitled "Digitally Controlled Light Emitting Diodes Systems and Methods";

Serial No. 60/068,792, filed Dec. 24, 1997, entitled "Multi-Color Intelligent Lighting";

Serial No. 60/078,861, filed Mar. 20, 1998, entitled "Digital Lighting Systems";

Serial No. 60/079,285, filed Mar. 25, 1998, entitled "System and Method for Controlled Illumination"; and

Serial No. 60/090,920, filed Jun. 26, 1998, entitled "Methods for Software Driven Generation of Multiple Simultaneous High Speed Pulse Width Modulated Signals";

Ser. No. 09/213,607, filed Dec. 17, 1998, now abandoned entitled SYSTEMS AND METHODS FOR SENSOR-RESPONSIVE ILLUMINATION;

Ser. No. 09/213,189, filed Dec. 17, 1998, now U.S. Pat. No. 6,459,919 entitled PRECISION ILLUMIIMATION;

Ser. No. 09/213,581, filed Dec. 17, 1998, entitled KINETIC ILLUMINATION;

Ser. No. 09/213,540, filed Dec. 17, 1998, entitled DATA DELIVERY TRACK;

Ser. No. 09/333,739, filed Jun. 15, 1999, entitled DIFFUSE ILLUMINATION SYSTEMS AND METHODS;

Ser. No. 09/344,699, filed Jun. 25, 1999, entitled METHOD FOR SOFTWARE DRIVEN GENERATION OF MULTIPLE SIMULTANEOUS HIGH SPEED PULSE WIDTH MODULATED SIGNALS;

Ser. No. 09/616,214, filed Jul. 14, 2000, entitled SYSTEMS AND METHODS FOR AUTHORING LIGHTING SEQUENCES;

Ser. No. 09/870,418, filed May 30, 2001, entitled METHODS AND APPARATUS FOR AUTHORING AND PLAYING BACK LIGHTING SEQUENCES;

Ser. No. 09/805,368, filed Mar. 13, 2001, entitled LIGHT-EMITTING DIODE BASED PRODUCTS;

Ser. No. 09/805,590, filed Mar. 13, 2001, entitled LIGHT-EMITTING DIODE BASED PRODUCTS;

Ser. No. 09/870,193, filed May 30, 2001, now U.S. Pat. No. 6,608,453 entitled METHODS AND APPARATUS FOR CONTROLLING DEVICES IN A NETWORKED LIGHTING SYSTEM;

Ser. No. 09/742,017, filed Dec. 20, 2000, entitled "Lighting Entertainment System", now abandoned which is a continuation of U.S. Ser. No. 09/213,548, filed Dec. 17, 1998, now U.S. Pat. No. 6,166,496; and

Ser. No. 09/815,418, filed Mar. 22, 2001, entitled "Lighting Entertainment System", which also is a continuation of U.S. Ser. No. 09/213,548, filed Dec. 17, 1998, now U.S. Pat. No. 6,166,496.

Each of the foregoing applications is hereby incorporated herein by reference.

FIELD OF THE INVENTION

The present invention relates generally to illumination and lighting control. More particularly, the present invention is directed to methods and apparatus for illumination of liquids, including illumination of liquids in environments such as pools or spas.

BACKGROUND

Conventional lighting for various space-illumination applications (e.g., residential, office/workplace, retail, commercial, industrial, recreational, sporting, entertainment and outdoor environments) generally involves light sources coupled to a source of power via manually operated mechanical switches. Some examples of conventional lighting include fluorescent, incandescent, sodium and halogen light sources. Incandescent light sources (e.g., tungsten filament light bulbs) are perhaps most commonly found in residential environments, while fluorescent light sources (e.g., ballast-controlled gas discharge tubes) commonly are used for large lighting installations in office and workplace environments, due to the high efficiency (high intensity per unit power consumed) of such sources. Sodium light sources commonly are used in outdoor environments (e.g., street lighting), and are also recognized for their energy efficiency, whereas halogen light sources may be found in residential and retail environments as more efficient alternatives to incandescent light sources.

Unlike the foregoing lighting examples, light emitting diodes (LEDs) generally are semiconductor-based light sources often employed in low-power instrumentation and appliance applications for indication purposes. LEDs conventionally are available in a variety of colors (e.g., red, green, yellow, blue, white), based on the types of materials used in their fabrication. This color variety of LEDs recently has been exploited to create LED-based light sources having sufficient light output for new space-illumination applications.

For example, as discussed in U.S. Pat. Nos. 6,016,038, 6,150,774, 6,166,496, 6,211,626, and 6,292,901, each of which patents is incorporated herein by reference, multiple differently-colored LEDs may be combined in a lighting fixture, wherein the intensity of the LEDs of each different color is independently controlled (erg., varied) to produce a

number of different hues. In one example of such an apparatus, red, green, and blue LEDs are used in combination to produce literally hundreds of different hues from a single lighting fixture. Additionally, the relative intensities of the red, green, and blue LEDs may be computer controlled, thereby providing a programmable multi-color light source.

Furthermore, as discussed in the aforementioned patents, and additionally in co-pending U.S. patent application Ser. No. 09/870,193, filed May 30, 2001, entitled METHODS AND APPARATUS FOR CONTROLLING DEVICES IN A NETWORKED LIGHTING SYSTEM, incorporated by reference herein, individual computer controllable LED-based multi-color light sources may be adapted to be coupled together to form a networked lighting system, wherein each light source is independently addressable. In such a network, one or more illumination programs may be executed to strategically route lighting data to any one or more of the independently addressable LED-based multi-color light sources, so as to generate a wide variety of dynamic lighting effects.

SUMMARY OF THE INVENTION

One embodiment of the invention is directed to an apparatus, comprising one of a pool and a spa to contain a liquid, at least one light source, supported by the one of the pool and the spa, to illuminate the liquid, at least one sensor to output at least one detection signal in response to a detectable condition, and at least one controller, coupled to the at least one light source and the at least one sensor, to control radiation output by the at least one light source based on the at least one detection signal.

Another embodiment of the invention is directed to an apparatus, comprising at least one light source to illuminate a liquid, the at least one light source including at least two differently colored LEDs to generate variable color radiation, at least one sensor to output at least one detection signal in response to a detectable condition, and at least one controller, coupled to the at least one light source and the at least one sensor, to control the variable color radiation generated by the at least one light source based on the at least one detection signal.

Another embodiment of the invention is directed to a method for illuminating a liquid, comprising acts of illuminating the liquid with radiation output simultaneously by at least two differently colored LEDs, and controlling the radiation based on at least one detectable condition.

Another embodiment of the invention is directed to a method for illuminating a liquid in one of a pool and a spa, comprising acts of a) illuminating the liquid in the one of the pool and the spa with variable color radiation, and b) controlling the variable color radiation based on at least one detectable condition.

BRIEF DESCRIPTION OF THE DRAWINGS

FIG. **1** is a diagram illustrating illumination of a liquid in a pool or spa environment, according to one embodiment of the invention;

FIG. **2** is a diagram illustrating one example of a light source used for illumination in a pool or spa environment such as that shown in FIG. **1**, according to one embodiment of the invention;

FIG. **3** is a diagram illustrating another example of a light source used for illumination in a pool or spa environment such as that shown in FIG. **1**, according to one embodiment of the invention;

FIG. **4** is a diagram of a networked lighting system for illumination in a pool or spa environment such as that shown in FIG. **1**, according to one embodiment of the invention;

FIG. **4**A is a diagram of a networked lighting system for illumination in a pool or spa environment such as that shown in FIG. **1**, according to another embodiment of the invention;

FIG. **4**B is a diagram of a truth table showing one example of an addressing scheme for the light source controllers of FIG. **4**A, according to one embodiment of the invention;

FIG. **5** is a diagram illustrating one example of a remote user interface used in a pool or spa environment such as that shown in FIG. **1**, according to one embodiment of the invention;

FIG. **6** is a diagram illustrating another example of a remote user interface used in a pool or spa environment such as that shown in FIG. **1**, according to one embodiment of the invention;

FIG. **7** is a diagram illustrating one example of a display of a remote user interface used in a pool or spa environment such as that shown in FIG. **1**, according to one embodiment of the invention;

FIG. **8** is a diagram illustrating the use of a sensor to control a light source in a pool or spa environment such as that shown in FIG. **1**, according to one embodiment of the invention;

FIG. **9** is a diagram illustrating the use of one or more sensors to control one or more light sources in a networked lighting system for a pool or spa environment such as that shown in FIG. **1**, according to one embodiment of the invention;

FIG. **10** is a diagram of a controller that facilitates control of a light source based on one or more interruptions of power, according to one embodiment of the invention;

FIG. **11** is a diagram illustrating a lighting fixture, having a particular depth dimension, that may be mounted on a wall or in a niche of a pool or spa, according to one embodiment of the invention;

FIG. **12** is a diagram illustrating a lighting fixture for illumination of liquids that is adapted to effectively dissipate heat into a liquid in contact with the lighting fixture, according to one embodiment of the invention;

FIG. **13** is a diagram illustrating a light fixture having an interface to engage mechanically and electrically with a conventional screw type pool or spa light socket, according to one embodiment of the invention;

FIG. **14** is a diagram illustrating a light fixture having an interface to engage mechanically and electrically with a conventional multi-pin pool or spa light socket, according to one embodiment of the invention;

FIG. **15** is a diagram illustrating a light fixture having an interface to engage mechanically and electrically with a conventional wedge type light socket mounted in a niche of a pool or spa, according to one embodiment of the invention;

FIG. **16**A is a diagram illustrating an example of an interface pin of the light fixture of FIG. **15**, according to one embodiment of the invention;

FIG. **16**B is a diagram illustrating an example of an interface pin of the light fixture of FIG. **15**, according to another embodiment of the invention;

FIG. **17** is a diagram of an apparatus to illuminate a flowing liquid, according to one embodiment of the invention;

FIG. **18** is a diagram of an apparatus to illuminate a flowing liquid, according to another embodiment of the invention;

FIG. **19** is a diagram of an apparatus to illuminate a flowing liquid, according to another embodiment of the invention; and

FIG. **20** is a diagram illustrating an illuminated sink or basin, according to one embodiment of the invention.

DETAILED DESCRIPTION

Applicants have recognized and appreciated that multi-color LED-based light sources may be adapted to illuminate liquids in a variety of environments (e.g., entertainment, recreational, sporting, therapeutic, utilitarian, etc.) to achieve a wide range of enhanced lighting effects. For example, as discussed in a number of the U.S. patents and patent applications referenced above, multi-color LED-based light sources may be employed to produce a variety of enhanced lighting effects in pools or spas, as well as in other liquid environments. It should be appreciated that the various concepts, methods, apparatus, and systems disclosed in any of the patents and patent applications referenced herein may be applied in various embodiments of the present invention discussed further below directed to the illumination of liquids.

Prior to the introduction of multi-color LED-based light sources in pool or spa environments (as disclosed in U.S. Pat. Nos. 6,016,038 and 6,166,496, for example), pools and spas conventionally were illuminated using standard white light incandescent, fluorescent or halogen lamps. In some cases, pool or spa light fixtures including conventional white light sources are assembled with one or more color filters, in an effort to add color to the light generated by the conventional white light sources. In particular, some conventional pool or spa light fixtures include a number of movable color filters to provide variable color light. In yet other conventional pool or spa lighting systems, fiber optics may be employed to distribute light around the edge of a pool or spa, wherein one end of the fiber optic may be coupled to a conventional white light source generating light through one or more color filters.

Unlike the foregoing conventional systems for illuminating a pool or spa using conventional white light sources and color filters, Applicants have recognized and appreciated that light sources other than conventional white light sources may be particularly adapted and employed to provide multi-color radiation for a variety of liquid illumination applications. Accordingly, one embodiment of the present invention is directed generally to novel methods and apparatus for illumination of liquids.

For example, in one embodiment of the invention, one or more multi-color LED-based light sources are employed to provide enhanced color illumination effects in liquid environments. In one aspect, multi-color LED-based light sources for illumination of liquids generally do not require the use of a color filter to produce color illumination effects. However, it should be appreciated that one or more color filters optionally may be employed with LED-based light sources, as well as other types of light sources, for illumination of liquids according to various embodiments of the invention. Additionally, LED-based multi-color light sources optionally may be used in conjunction with a fiber optic light distribution system for various liquid illumination applications, according to one embodiment of the invention.

Examples of liquid environments that may be illuminated according to various embodiments of the present invention include, but are not limited to, pools, spas, tubs, basins, sinks, water baths, water tanks, fish tanks, aquariums, waterfalls, and fountains. In one aspect of the invention, one or more light sources may be employed to provide enhanced color illumination effects for essentially standing (e.g., stationary) liquids as well as flowing liquids, and similarly may be used to illuminate ice, water vapor, rain, mist, fog, and the like, whether naturally occurring or man made (e.g., produced by a machine). More generally, in various aspects of the present invention, one or more light sources may be used to illuminate any of a variety of liquids that allow radiation generated by the light sources to be at least partially transmitted or reflected.

One embodiment of the present invention is particularly directed to illuminating a liquid in a pool or spa. According to various aspects of this embodiment, one or more multi-color light sources may be employed in a pool or spa environment. In one aspect, such multi-color light sources may be individually and independently controllable (i.e., "stand-alone") devices that each generates multi-color illumination in the liquid contained in the pool or spa. Alternatively, two or more independently controllable and independently addressable multi-color light sources may be coupled together to form a networked lighting system, to provide a variety of programmable and/or coordinated color illumination effects in the pool or spa environment. Specifically, in one embodiment, two or more multi-color light sources coupled together in a networked lighting system may provide dynamic variable color lighting effects in all or only particular sections or portions of a pool or spa.

Additionally, according to one embodiment, one or more multi-color light sources in a pool or spa environment may be remotely controlled to facilitate a number of liquid illumination applications. In one aspect of this embodiment, one or more multicolor light sources in the pool or spa environment may be remotely controlled via one or more remote user interfaces. In another aspect, one or more multi-color light sources may be remotely controlled based on one or more interruptions in the power supplied to the light source(s). In yet another aspect, one or more light sources in the pool or spa environment may be remotely controlled based on information obtained from one or more sensors adapted to output signals in response to one or more detectable conditions in the pool or spa environment. In yet another aspect, one or more light sources in the pool or spa environment may be remotely controlled based on information obtained from a data network, such as the Internet, for example.

In another embodiment of the invention, one or more multi-color light sources in the pool or spa environment may be particularly adapted to execute one or more dynamic variable color illumination programs. In one aspect of this embodiment, the selection of a particular dynamic illumination program from a number of such programs may be indicated to the user via the radiation generated by the one or more light sources. In particular, in one aspect, the selection of a particular dynamic illumination program may be indicated by temporarily modifying one or more variable parameters of the dynamic color variation program that affect the radiation generated by the light sources upon execution of the program.

For example, a particular illumination program may be designed such that, when executed, the radiation output from one or more light sources is varied at some predetermined rate to transition between a number of different colors in succession. Such illumination programs generally may be referred to as dynamic variable color illumination programs, and an example of such an illumination program is a "color wash" program. According to one embodiment of the invention, upon selection of a particular dynamic variable

color illumination program, a color variation speed of the program is noticeably increased from the predetermined rate for a short time period (e.g., 1 to 10 seconds) so that a user may recognize that the program has been selected. Thereafter, the color variation speed of the program is automatically decreased to the predetermined rate at which the program is intended to run.

Another embodiment of the invention is directed to generating variable color radiation in a liquid medium to compensate for various radiation absorption and/or scattering effects due to the liquid medium. In this regard, Applicants have recognized and appreciated that many common liquids, such as water, significantly absorb and/or scatter red color, such that it is more difficult for an observer to detect a presence of red color in the liquid than in air, for example. Additionally, Applicants have recognized and appreciated that in some common pool or spa environments, in which the walls and/or floor of a pool or spa may be constructed with a bluish colored vinyl lining, red color also may be significantly absorbed and/or scattered by the vinyl lining.

In view of the foregoing, one embodiment of the invention is directed to a method for generating "liquid hues" to illuminate a liquid, such that when viewed in the liquid by an observer, the liquid hues approximate similar hues observed in non-liquid mediums (e.g., air). More specifically, in one aspect of this embodiment, liquid hues that include radiation having a red color in combination with one or more other colors are generated to approximate a similar hue in a non-liquid medium by increasing the amount of red color included in the liquid hue, so as to compensate for the absorption and/or scattering of the red color in the liquid medium.

As discussed above, one or more dynamic color illumination programs may be executed in a pool or spa environment to realize a variety of illumination effects. Another embodiment of the invention is directed to methods for dynamic color illumination of a liquid medium that take into consideration the various absorption and scattering effects also discussed above. In particular, in one embodiment of the invention, red color appearing alone is omitted from a dynamic variable color illumination program, due to significant absorption and/or scattering of the red color by the illuminated liquid, so as to prevent the appearance of a lapse or break (i.e., absence of illumination) in the illumination program. For example, according to one embodiment, in the "color wash" illumination program discussed above, red color appearing alone is omitted from the color wash program because, relative to other colors radiated in the liquid, an observer would essentially see little or no hue at all in the liquid if red color alone was radiated into the liquid. It should be appreciated, however, that in one aspect of this embodiment, red color radiation may nonetheless be generated in combination with radiation of one or more other colors to produce a variety of liquid hues, as discussed above.

Yet another embodiment of the invention is directed to a multi-color LED-based light source that includes an interface adapted to engage mechanically and electrically with a conventional pool or spa light socket. Some examples of a conventional pool or spa light socket include, but are not limited to, a screw type light socket commonly used for Edison-type incandescent light bulbs, a fluorescent light socket, various types of halogen light sockets, and the like.

For example, in one embodiment, a multi-color LED-based light fixture includes an interface adapted to engage mechanically and electrically with a wedge type light socket commonly found in many commercial pool and spa applications. In one aspect of this embodiment, as well as in other embodiments, the light fixture may include an encapsulant in contact with one or more LEDs (and electrical circuitry associated with the LEDs) to protect these components of the light fixture from moisture. In another aspect of this embodiment, the interface includes a plurality of pins particularly formed, and having particular dimensions, to facilitate mechanical engagement of the light fixture with the wedge type light socket. In yet another aspect, the interface optionally may include a rubber grommet to further facilitate mechanical engagement of the light fixture with the wedge type light socket.

Another embodiment of the invention is directed to a surface mount lighting fixture having a significantly thin depth dimension normal to a surface to which the lighting fixture is mounted. For example, in one aspect of this embodiment, the light fixture has a depth dimension of less than 2.5 inches. In another aspect, the light fixture has a depth dimension of as little as 0.5 inches, and hence is significantly thinner than conventional light sources typically employed in pool or spa environments. In yet another aspect, such a "thin" lighting fixture may include a multi-color LED-based light source to generate variable color radiation. In yet another aspect, the lighting fixture may be adapted to be mounted on a portion of an inner surface of a pool or a spa.

Another embodiment of the invention is directed to methods and apparatus for facilitating the dissipation of heat generated from a light source in a liquid environment. In particular, one embodiment of the invention is directed to a light fixture for use in a liquid environment. In one aspect of this embodiment, the light fixture includes a housing adapted to be at least partially in contact with a liquid. The housing is constructed to prevent one or more light sources supported and enclosed therein from contacting a liquid. The one or more light sources and the housing of the light fixture are particularly adapted such that heat generated by the light sources is effectively absorbed by the liquid via the housing. For example, in one aspect of this embodiment, the light fixture includes a gap pad disposed between the light source and the housing to provide a thermally conductive path between the light source and the housing. In another aspect of this embodiment, the housing includes a back plate in contact with the gap pad, wherein the back plate provides an effective thermal coupling between the light source and the liquid in contact with the housing.

Following below are more detailed descriptions of various concepts related to, and embodiments of, methods and apparatus according to the present invention for the illumination of liquids. It should be appreciated that various aspects of the invention, as discussed above and outlined further below, may be implemented in any of numerous ways as the invention is not limited to any particular manner of implementation. Examples of specific implementations are provided for illustrative purposes only.

FIG. **1** is a diagram illustrating a pool or spa **20** containing a liquid **22** (e.g., water). According to one embodiment of the invention, the pool or spa **20** may be equipped with one or more light sources; for example, FIG. **1** shows a number of light sources **24A–24I**, supported by the pool or spa **20**, to illuminate the liquid **22**. While FIG. **1** shows nine light sources distributed around the pool or spa **20**, it should be appreciated that the depiction in FIG. **1** is for purposes of illustration only, and that the invention is not limited in terms of the number or placement of lights sources in the pool and spa environment.

In various aspects of the embodiment shown in FIG. **1**, the pool or spa **20**, as well as the light sources **24A–24I** themselves, may have a variety of different shapes and sizes. For example, while several of the light sources (i.e., **24A**, **24B**, and **24E–24I**) are indicated as having an essentially circular shape in FIG. **1**, two of the light sources (i.e., **24C** and **24D**) are indicated as having a rectangular shape. FIG. **1** also shows that, according to one aspect, the pool or spa **20** may have one or more walls **26** and a floor **28**, and that each of the light sources **24A–24I** may be supported by one of the wall **26** or the floor **28**. It should be appreciated, however, that the invention is not limited in this respect, in that the pool or spa **20** need not have one or more discrete walls **26** and a discrete floor **28**. Rather, in other embodiments, the structure of the pool or spa **20** that supports one or more of the light sources **24A–24I** as well as the liquid **22** may include a continuously curved inner surface, such that there is no explicit delineation between one or more walls and a floor of the pool or spa **20**.

As indicated in FIG. **1**, the pool or spa **20** may have a range **30** of typical liquid levels of the liquid **22** during use. FIG. **1** further illustrates that, according to one embodiment, one or more of the light sources **24A–24I** are disposed below the range **30** of typical liquid levels. In particular, FIG. **1** explicitly illustrates that at least the light source **24A** is disposed below the range **30** of typical liquid levels. In various embodiments discussed further below, one or more of the light sources **24A–24I** may be located in a "niche" or indentation in the wall **26** or floor **28** of the pool or spa (not explicitly shown in FIG. **1**). In some embodiments, a niche in which a light source is disposed may be adapted to be water tight, such that the light source is prevented from contacting the liquid **22** in the pool or spa. In other embodiments, the niche merely may be an indented deformation in the wall **26** or the floor **28** of the pool or spa, and may be filled with the liquid **22**. In yet other embodiments discussed further below, at least some portion of the walls **26** of the pool or spa may be "niche-less," and one or more of the light sources **24A–24I** may be mounted on an inner surface of the wall **26** or floor **28** of the pool or spa **20**, facing the liquid **22**.

In this respect, according to one embodiment of the invention, one or more of the light sources **24A–24I** shown in FIG. **1** may be adapted to be submersible in the liquid **22**. For example, in one embodiment, one or more of the light sources **24A–24I** may include one or more waterproof surfaces or be enclosed in a water tight housing. In particular, for purposes of illustration, FIG. **1** indicates that the light source **24G** is disposed in a housing **44G**, which may be essentially water tight and/or include one or more waterproof surfaces. While not explicitly shown in FIG. **1**, one or more of the other light sources indicated in FIG. **1** also may be associated with a housing. Various housings according to the invention for light sources in a pool or spa environment are discussed further below in connection with FIGS. **3**, **11**, and **12**. In yet another embodiment, discussed in greater detail further below in connection with FIG. **15**, one or more of the light sources **24A–24I** may include an encapsulant to protect various components of the light source from moisture in the typically humid environment associated with a pool or spa.

FIG. **1** also illustrates that the pool or spa **20** optionally may include one or more heaters **50**, blowers **52**, and/or circulation and filtration systems **54**. Such accessories generally may be employed to condition the pool and spa environment and, more particularly, to condition the liquid **22** contained in the pool or spa **20**. For example, such accessories may enhance enjoyment of the pool or spa environment by heating the liquid **22** and/or creating various soothing or invigorating flows of the liquid **22**. In one embodiment of the invention, one or more of the light sources **24A–24I** are controlled in a coordinated fashion with one or more other accessories (e.g., heaters, blowers, filtration and circulation systems, etc.) in the pool or spa environment. In particular, according to one embodiment, one or more accessories provide control signals to one or more light sources; alternatively, in another embodiment, one or more light sources may provide control signals to one or more accessories, as discussed further below in connection with FIG. **4**.

FIG. **1** also illustrates that, according to one embodiment of the invention, one or more remote user interfaces **56** may be employed to control one or more of the light sources **24A–24I** associated with the pool or spa **20**. In one aspect of this embodiment, one or more user interfaces optionally may be used to additionally control one or more of the other accessories (e.g., heaters, blowers, circulation and filtration systems) associated with the pool or spa **20**.

As shown in FIG. **1**, a remote user interface **56** according to one embodiment of the invention outputs one or more control signals **64** to one or more of the light sources **24A–24I**. For purposes of illustration in FIG. **1**, the remote user interface **56** is shown coupled to the light source **24D**. It should be appreciated, however, that according to one embodiment of the invention as discussed further below in connection with FIG. **4**, two or more of the light sources **24A–24I** may be coupled together, and that the remote user interface **56** may be coupled to any one or more of the light sources **24A–24I** to facilitate control of the one or more light sources. FIG. **1** also shows that the remote user interface **56** may include one or more selectors **60A** and **60B** to allow a user to control various aspects of at least the illumination of the liquid **22** in the pool or spa **20**. Additionally, FIG. **1** indicates that in one embodiment, the remote user interface **56** may receive one or more external signals **68** used to control various aspects of at least the illumination of the liquid **22** in the pool or spa **20**. Further details of various embodiments of the invention directed to a remote user interface for illumination of liquids is discussed below in connection with FIGS. **4–7**.

FIG. **2** is a diagram illustrating an exemplary light source **24**, according to one embodiment of the invention, that may be representative of any one of the light sources **24A–24I** in the pool or spa environment shown in FIG. **1**. In particular, FIG. **2** illustrates the light source **24** and other components that may be associated with the light source **24** according to various embodiments of the invention. In one embodiment, the light source **24** and one or more other associated components (discussed further below) may be included together in a housing **44** supported by the pool or spa **20** shown in FIG. **1**. In other embodiments discussed further below in connection with FIGS. **13–15**, the light source **24** and one or more other associated components may be included together in various forms as a lighting fixture that is adapted to engage mechanically and electrically with a conventional pool or spa light socket supported by the pool or spa **20** shown in FIG. **1**.

With reference again to FIG. **2**, the light source **24** according to one embodiment of the invention may include one or more LEDs **32**. More specifically, in one aspect of this embodiment, the light source **24** may include two or more differently colored LEDs (indicated as **32A**, **32B**, and **32C** in FIG. **2**), wherein the intensity of the LEDs of each different color may be independently varied to produce a

number of different hues. In the light source **24** shown in FIG. **2**, it should be appreciated that any number of LEDs **32** may be included in the light source, and that multiple LEDs of the same color may be distributed throughout the light source **24** in a variety of manners.

U.S. Pat. Nos. 6,016,038, 6,150,774, 6,166,496, 6,211,626, and 6,292,901 disclose examples of multi-color LED-based light sources representative of the light source **24** shown in FIG. **2**, wherein red, green, and blue LEDs are used in combination to produce literally hundreds of different hues, without requiring the use of a color filter. In this respect, in one aspect of the embodiment shown in FIG. **2**, the light fixture **24** may include at least one red LED **32**A, at least one green LED **32**B, and at least one blue LED **32**C. Accordingly, it should be appreciated that in one embodiment of the invention, within the housing **44** shown in FIG. **2**, the light source **24** may include a number of independently controllable light sources in the form of independently controllable differently colored LEDs **32**A, **32**B, and **32**C.

FIG. **2** also shows that one or more controllers **34** may be associated with the light source **24** to control radiation output by the light source. For example, according to one embodiment, the controller **34** shown in FIG. **2** may be adapted to control a color of the overall radiation output by the light source **24** by individually and independently controlling the intensity of each of the differently colored LEDs **32**A, **32**B and **32**C.

In particular, according to one aspect of this embodiment, the controller **34** of FIG. **2** outputs one or more control signals **36** to the light source **24**, wherein the control signal(s) may include one or more pulse width modulated signals. Pulse-width-modulated signal control of LEDs is discussed in detail in the U.S. patents referred to above, as well as in U.S. application Ser. No. 09/344,699 entitled "Method for Software Driven Generation of Multiple Simultaneous High-Speed Pulse Width Modulated Signals," which application is incorporated herein by reference. As discussed in the foregoing references, a pulse width modulated signal, which includes rapid successions of pulsed current provided to one or more LEDs of the light source **24**, creates the effect of a constant light output from the light source, without human perceptible flicker. In this technique, the duty cycle of a pulse width modulated signal serving as the control signal **36** (intended for one or more LEDs of a particular color) is adjusted based on the desired intensity of the radiation output by the particularly colored LED(s). In an alternative method of LED control according to another embodiment, one or more control signals **36** output by the controller **34** to the light source **24** may include one or more variable analog signals to adjust the relative intensities of differently colored LEDs of the light source **24**.

FIG. **2** also shows that, according to one embodiment, one or more storage devices **38** may be coupled to the controller **34** to store one or more illumination programs. Examples of various storage devices suitable for purposes of the present invention include, but are not limited to, RAM, PROM, EPROM, EEPROM, CD, DVD, optical disks, floppy disks, magnetic tape media, and the like. FIG. **2** shows that, in one embodiment, the storage device **38** stores at least a first illumination program **40**A and a second illumination program **40**B. In one aspect of this embodiment, the controller **34** is adapted to execute one or more illumination programs so as to control the radiation output by the light source **24**. For example, in one aspect, a given illumination program may include information that enables the controller to adjust the intensity one or more LEDs of each different color for particular time periods, so as to create a wide variety of variable color dynamic illumination effects. In another aspect, one or more illumination programs may utilize the DMX data protocol, as discussed in the various U.S. patents and patent applications referenced above, and the controller may be particularly adapted to execute programs utilizing the DMX data protocol.

According to one embodiment, the storage device **38** may be a removable storage device (e.g., the housing **44** may be adapted to facilitate removal of the storage device **38**). In yet another embodiment, the storage device **38** may be located exterior to the housing **44**. In either case, according to one aspect of these embodiments, a given removable or "changeable" storage device **38** may be pre-programmed with one or more particular illumination programs or a particular set of illumination programs. In this aspect, a user could change storage devices to acquire different illumination programs for the liquid illumination environment. In another aspect of this embodiment, an example of a business method utilizing such removable or changeable storage devices would be to have a retail store selling storage devices for liquid illumination environments with preloaded illumination programs, and/or providing a service to download illumination programs (e.g., from a central storage location at the store) to a blank storage device sold at the store. In yet another embodiment, one or more fixed or removable storage devices **38** may be programmed with illumination programs downloaded from a data network, or from a web site on the Internet. In one aspect of this embodiment, information from the data network or Internet web site may be provided to the storage device as one or more external signals **46** via the controller **34**.

According to one embodiment, the controller **34** shown in FIG. **2** receives a power signal **47** to provide power to the light source **24**. In various aspects of this embodiment, the power signal **47** may be provided directly by either an A.C. or D.C. power source. According to one aspect of this embodiment, an A.C. to D.C. converter (not shown in FIG. **2**) may be utilized to convert an A.C. power source to a D.C. voltage. The A.C. to D.C. converter may be included in the controller **34** itself, or may be located externally to the controller **34**, such that a low voltage D.C. power signal (derived from an A.C. power signal) is provided to the controller **34** as the power signal **47**. According to another aspect of this embodiment, such an arrangement facilitates safe operation of one or more light sources **24** when used in liquid illumination applications.

FIG. **2** also shows that, according to one embodiment, the controller **34** may include one or more inputs **45** to receive one or more external signals **46**. In one aspect of this embodiment, the controller **34** is adapted such that one or more parameters (e.g., a color) of the radiation output by the light source **24** is controlled based on one or more external signals **46**. In this regard, according to one aspect of this embodiment, the radiation generated by the light source **24** may be remotely controllable.

For example, according to one embodiment discussed further below, one or more external signals **46** may be derived from one or more remote user interfaces (e.g., the remote user interface **56** shown in FIG. **1**). In one aspect of this embodiment, the remote user interface **56** is not in contact with or supported by the light source **24** or the controller **34** (e.g., the user interface is not supported by the housing **44**); rather, the user interface is located remotely from the light source **24** and only coupled to the light source (e.g., via the controller **34**) by virtue of some form of communication link, which may be a wire (cable), fiber optic, or wireless link).

In other embodiments, one or more external signals **46** provided to the controller **34** shown in FIG. **2** may be derived from one or more sensors adapted to output signals in response to one or more detectable conditions (e.g., of the environment in or around the pool or spa **20** shown in FIG. **1**). Similarly, one or more external signals **46** may be derived from one or more audio signals, such that radiation generated by the light source **24** may be controlled based on the audio signal(s). Likewise, one or more external signals **46** may be derived from a data network, as discussed further below in connection with FIG. **4**.

In another embodiment, the power signal **47** indicated in FIG. **2** may serve as an external signal **46**, and the controller **34** may be adapted such that one or more parameters (e.g., a color) of the radiation output by the light source **24** is controlled based on one or more interruptions in the power signal **47**. In yet another embodiment, one or more external signals **46** may be derived from one or more other devices or accessories associated with the pool or spa **20** shown in FIG. **1**. For example, as discussed above in connection with FIG. **1**, one or more of the heater **50**, blower **52**, or circulation and filtration system **54** may provide one or more signals from which one or more external signals **46** may be derived, such that one or more of these other devices controls the radiation output by the light source **24**.

While not shown explicitly in FIG. **2**, according to one embodiment, the controller **34** may be adapted to receive a first external signal $\mathbf{46}_1$, designated as an "options" signal, and a second external signal $\mathbf{46}_2$, designated as a "mode" signal, via respective inputs $\mathbf{45}_1$ and $\mathbf{45}_2$ of the controller **34**. In one aspect of this embodiment, the respective "mode" and "options" signals facilitate operation of the controller **34** (and, hence, the light source **24**) with a remote user interface **56**, as shown in FIG. **1** and discussed further below in connection with FIGS. **4**–**7**. In particular, according to one embodiment, the light source **24**, via the controller **34**, may be operated as a "stand-alone" independently controllable device via a remote user interface that generates the "mode" and "options" signals, respectively, to control the device.

For example, according to one aspect of this embodiment, the controller **34** adapted to receive the mode and options signals may be controlled using a remote user interface **56** having two or more selectors **60**A and **60**B, as shown for example in FIG. **1**. In one aspect, a first selector **60**A of the remote user interface **56**, when activated by a user, would generate a "mode" signal, whereas a second selector **60**B would generate an "options" signal. in FIG. **1**, an output of the remote user interface **56** is shown generally as the signal **64**; however, it should be appreciated that, according to one embodiment, the signal **64** output from the remote user interface **56** may include a first output signal $\mathbf{64}_1$ (corresponding to the "options" signal $\mathbf{46}_1$ input to the controller **34**) and a second output signal $\mathbf{64}_2$ (corresponding to the "mode" signal $\mathbf{46}_2$ input to the controller **34**).

According to one aspect of this embodiment, a "mode" signal generated by the remote user interface **56** may be used to select one of a number of illumination programs stored in the storage device **38** shown in FIG. **2**, as discussed above. Likewise, according to another aspect, the "options" signal generated by the remote user interface **56** may be used to adjust one or more variable parameters of a selected illumination program. For example, in one embodiment, a user may operate the first selector **60**A to generate a "mode" signal which sequentially toggles through a number of illumination programs stored on the storage device **38**, to select the particular illumination program, for example, "color wash". In one aspect of this embodiment, the "color wash" program may have an adjustable color variation speed (discussed further below). Accordingly, upon selection of the "color wash" program via the selector **60**A, the user may activate the selector **60**B, which generates an "options" signal from the remote user interface **56** and allows the user to change the color variation speed of the "color wash" program. It should be appreciated, however, that the invention is not limited to the foregoing example, as a number of different illumination programs having a variety of adjustable parameters may be selected and tailored by a user in a manner similar to that discussed above.

According to another embodiment, respective "mode" and "options" signals applied to a controller **34** may be used to appropriately configure a number of controllers for operation in a networked lighting system. The use of "mode" and "options" signals in this manner are discussed further below in connection with FIGS. **4**A and **4**B.

According to one embodiment, a local user interface **43** may be associated with the controller **34** shown in FIG. **2** to facilitate user selection of one or more operating modes of the controller **34** and the light source **24**. For example, in one aspect of this embodiment, the local user interface **43** may be a button, switch, dial, or any other interface or combination of interfaces that facilitates selection of one or more of the illumination programs **40**A and **40**B stored in the storage device **38**. Additionally, according to another aspect of this embodiment, each illumination program may have one or more adjustable parameters, and the local user interface **43** may be employed to vary one or more of the adjustable parameters of the illumination programs.

In connection with the foregoing discussion of FIG. **2**, it should be appreciated that the invention is not limited to the particular components and arrangement of components shown in FIG. **2**, and that the particular implementation shown in FIG. **2** is depicted for purposes of illustration only. For example, according to other embodiments, the storage device **38** may not be included in a housing **44** for the light source **24**, and the controller **34** may receive illumination program information from a remote source via one or more external signals **46**. Likewise, according to other embodiments, the controller **34** itself may not be included in the housing **44** along with the light source **24**. Also, the local user interface **43** need not necessarily be included in an apparatus according to one embodiment of the invention. In general, it should be appreciated that, according to the present invention, numerous implementations of a light source **24**, as well as one or more other components associated with the light source **24**, are suitable for the illumination of liquids.

FIG. **3** is a diagram illustrating an example of a housing **44** for a light source **24**, according to one embodiment of the invention. In one aspect of the embodiment shown in FIG. **3**, the housing **44** may include at least one waterproof or water resistant surface **49**, as discussed above in connection with FIG. **1**. Additionally, in another aspect, the housing **44** may include a waterproof lens **51** that is substantially light transmissive, but nonetheless prevents the light source **24** from contacting a liquid. In various embodiments, the housing **44** may contain one or more light sources **24**, and also may contain one or more other components associated with the light source **24**, as discussed above in connection with FIG. **2**. For example, according to one embodiment, the housing **44** may include at least the light source **24** and the controller **34** shown in FIG. **2**, and optionally also may include one or more storage devices **38**. FIG. **3** also shows that the housing **44** may be adapted to support one or more local user interfaces **43**, and be equipped with connections to receive one or more external signals **46** and a power signal **47**.

With reference again to the discussion in connection with FIG. **1** and, more particularly, the light source **24**G and the housing **44**G shown in the wall **26** of the pool or spa **20** of FIG. **1**, a housing similar to that shown in FIG. **3** may be mounted on a portion of an inner surface of the wall **26** using a variety of mounting mechanisms, such that the housing **44** does not protrude through the wall **26** of the pool or spa **20**. This type of mounting arrangement for a lighting fixture in a pool or spa conventionally is referred to as "niche-less" lighting. Alternatively, in yet another embodiment, a hole may be cut in the wall **26** of the pool or spa **20**, and the housing **44** shown in FIG. **3** may be mounted to the wall such that at least a portion of the body of the housing **44** protrudes through the wall **26** of the pool or spa **20**. In one aspect of this embodiment, the housing **44** is adapted to make a watertight seal with the inner surface of the wall **26** such that the liquid **22** in the pool or spa **20** is unable to leak through the hole containing the housing **44**. In yet another embodiment of the invention, a "niche" may be constructed in the wall **26** of the pool or spa, and the niche itself may serve as a portion of the housing **44** containing the light source **24** and possibly one or more other components associated with the light source. Various embodiments of the invention directed to light fixtures and arrangements for supporting one or more light fixtures in a pool or spa environment are discussed further below in connection with FIGS. **11–15**.

FIG. **4** is a diagram illustrating one example of a networked lighting system **42** employed in the pool or spa environment shown in FIG. **1**, according to one embodiment of the invention. As discussed above in connection with FIG. **1**, one or more light sources **24**A–**24**I supported by the pool or spa **20** each may serve as a "stand-alone" illumination source, and may be adapted to be individually and independently controllable to produce a variety of variable color lighting effects. Alternatively, as shown in the embodiment of FIG. **4**, two or more light sources may be coupled together, along with one or more other devices associated with the pool or spa environment, to form a networked lighting system **42**. Various networked lighting systems suitable for use in the pool and spa environment shown in FIG. **1** are discussed in the U.S. patents referenced above, as well as U.S. patent application Ser. No. 09/870,193, filed May 30, 2001, entitled METHODS AND APPARATUS FOR CONTROLLING DEVICES IN A NETWORKED LIGHTING SYSTEM, incorporated herein by reference.

By way of example, FIG. **4** illustrates four of the light sources **24**A–**24**D shown supported by the pool or spa **20** in FIG. **1**. Although FIG. **4** shows four light sources **24**A–**24**D coupled together to form the networked lighting system **42**, it should be appreciated that the invention is not limited in this respect, as any two or more of the light sources shown in FIG. **1** may be coupled together to form the networked lighting system **42**.

FIG. **4** illustrates that each of the light sources **24**A–**24**D receives one or more external signals **46** from a data connection or network **48**. Each of the light sources in FIG. **4** also may be adapted to transmit one or more output signals **53** to the network **48**. FIG. **4** also illustrates that the network **48** may be coupled to one or more other devices associated with the pool or spa environment (e.g., the heater **50**, the circulation and filtration system **54**, the blower **52**, and one or more remote user interfaces **56**) and also may be coupled to the Internet (World Wide Web). It should be appreciated that, according to various embodiments, the network **48** may comprise any one or more of a variety of communication media, including, but not limited to, wire cable, fiber optic, and wireless links that support one or more of radio frequency (RF), infrared (IR), microwave communication techniques, for example.

In the networked lighting system **42** shown in FIG. **4**, according to one embodiment, one light source coupled to the network **48** may act as a "master" to control one or more other "slave" light sources and/or other devices coupled to the network **48**. Additionally, while not shown explicitly in FIG. **4**, the network **48** may be coupled to one or more processors that may serve to coordinate the various functions of different devices associated with the pool or spa, including the light sources **24**A–**24**D and other accessories. In one embodiment discussed further below in connection with FIGS. **5–7**, a remote user interface **56** may serve as a central processor to coordinate the various functions of the networked lighting system **42**.

According to one embodiment, each of the controllers **34**A–**34**D shown in FIG. **4** (respectively associated with the light sources **24**A–**24**D) may include one or more independently controllable output ports to provide one or more control signals **36**A–**36**D respectively to the light sources **24**A–**24**D, based on one or more external signals **46** received by the controllers from the data network **48**. In one aspect of this embodiment, a given controller's output ports are "independently controllable," in that the controller receives data on the network **48** and appropriately routes particular portions of the received data that is intended for the controller's respective output ports. In another aspect of this embodiment, a given controller is "independently addressable," in that the controller may receive data intended for multiple controllers coupled to the network **48**, but selectively "picks-off" particular data from the network intended for the one or more output ports supported by the controller.

More specifically, in the networked lighting system **42** of FIG. **4**, according to one embodiment, individual LEDs or groups of same color LEDs of each light source **24**A–**24**D are coupled to independently controllable output ports of the controller associated with the light source. By virtue of the independently addressable controllers, individual LEDs or groups of same color LEDs of each light source may be controlled independently of one another based on various control information (e.g., data) transported throughout the network. In this manner, each light source **24**A–**24**D may be independently controlled, and multiple light sources coupled to the network **48** may be independently controlled in a coordinated manner to achieve a variety of enhanced color lighting effects around all or a portion of the pool or spa **20** shown in FIG. **1**.

According to yet another embodiment of the invention directed to a networked lighting system **42** as shown in FIG. **4**, one or more other devices associated with the pool or spa **20**, such as the heater **50**, the blower **52**, and the circulation or filtration system **54**, may control one or more of the light sources **24**A–**24**D coupled to the data network **48**. For example, in one aspect of this embodiment, illumination conditions created by one or more of the light sources **24**A–**24**D may particularly indicate activation of one or more of the other devices or accessories associated with the pool or spa. Some illustrative examples of this embodiment include changing illumination conditions in the pool or spa to a particular color when the heater **50** is activated, or changing the illumination conditions to one or more other particular colors when one or more blowers **52** comes on to agitate the liquid **22** in the pool or spa **20**. Similarly, one or more of the light sources **24**A–**24**D can generate a particular illumination condition in the pool or spa **20** indicating any

number of events associated with one or more other devices or accessories associated with the pool or spa **20**.

In yet another embodiment of the invention, one or more of the light sources **24**A or **24**D also may control one or more other devices or accessories associated with the pool or spa that are coupled to the network **48**. For example, in one aspect of this embodiment, one or more of the other devices or accessories may be activated to create a particular condition in the liquid **22** contained in the pool or spa **20** when one or more of the light sources **24**A–**24**D generate a particular illumination condition in the pool or spa (e.g., when the color green is generated, the circulation system creates a whirlpool in the liquid **22**).

FIG. **4** also illustrates that, according to one embodiment of the invention, one or more remote user interfaces **56** may be coupled to the network **48** to control one or more of the light sources **24**A–**24**D and optionally other devices and accessories associated with the pool or spa **20** shown in FIG. **1**. According to various embodiments of the invention, a remote user interface **56** may be a relatively simple device including one or more selectors and minimal circuitry to allow a user to remotely control at least a color of the variable color radiation output of one or more of the light sources **24**A–**24**D coupled to the network **48**. Alternatively, as discussed further below in connection with FIGS. **5**–**7**, the remote user interface **56** optionally may include one or more processors, storage devices, a number of different types of selectors operable by a user, as well as a display, to provide a sophisticated interface for control of the network lighting system **42** associated with the pool or spa **20** shown in FIG. **1**. In one aspect of these embodiments, some type of remote user interface **56** may be included in a control panel along with other pool or spa controls at some central location in the pool and spa environment. In yet another aspect, the remote user interface **56** may be an essentially mobile device that one or more users may transport to different locations in and around the pool or spa environment.

According to another embodiment of the invention, as illustrated in FIG. **4**, the network **48** associated with the networked lighting system **42** may be coupled to the Internet (World Wide Web). According to one aspect of this embodiment, one or more light sources **24**A–**24**D of the networked lighting system **42** may be controlled based on information obtained from the Internet. For example, in one aspect of this embodiment, information obtained from the Internet may be related to one or more weather conditions in the vicinity of the pool or spa **20** shown in FIG. **1**. In this aspect, one or more of the light sources **24**A–**24**D, as well as one or more other devices or accessories associated with the pool or spa **20**, may be controlled to change the pool or spa environment based on the weather information (whether obtained via the Internet or otherwise). For example, in one aspect of this embodiment, if weather information obtained from any of a variety of sources, including the Internet, indicates that thunderstorms are approaching the area of the pool or spa **20**, one or more of the light sources **24**A–**24**D may be controlled to indicate an emergency situation (e.g., the liquid **22** in the pool or spa **20** could be illuminated to flash quickly on a particular color).

FIG. **4**A is a diagram illustrating another example of a networked lighting system **42**B that may be employed in the pool or spa environment shown in FIG. **1**, according to one embodiment of the invention. In the embodiment of FIG. **4**A, a central controller **134** coupled to the network **48** is adapted to control four light sources **24**A–**24**D respectively associated with four controllers **34**A–**34**D. In one aspect of this embodiment, each of the controllers **34**A–**34**D is adapted to receive at least two input signals. In particular, as discussed above in connection with FIG. **2**, in one aspect, each of the controllers **34**A–**34**D is adapted to receive a "mode" signal and an "options" signal. For example, FIG. **4**A shows that the controller **34**A receives a first signal $\mathbf{46}A_1$ (an "options" signal) and a second signal $\mathbf{46}A_2$ (a "mode" signal). The other controllers **34**B–**34**D shown in FIG. **4**A are designated similarly.

As illustrated in FIG. **4**A, according to one embodiment, the central controller **134** may be equipped with a connection block **140** to provide connections to the controllers **34**A–**34**D. In particular, in one aspect of this embodiment, the connection block **140** includes a plurality of sub-blocks **140**A–**140**D respectively allocated for the controllers **34**A–**34**D. For example, in FIG. **4**A, the controller **34**A is connected to the sub-block **140**A, the controller **34**B is connected to the sub-block **140**B, and so on. According to another aspect, each of the sub-blocks **140**A–**140**D includes two terminals, a first terminal designated as "M" (i.e., for "mode" signal) and a second terminal designated as "O" (i.e., for "options" signal).

In one aspect of the embodiment shown in FIG. **4**A, the central controller **134** outputs a data signal **136** and a logic high/low (H/L) select signal **138** to the controllers **34**A–**34**D of the networked lighting system **42**B. In another aspect of this embodiment, the particular data that each of the controllers **34**A–**34**D receives depends on the manner of connection of each controller's "mode" and "options" signal inputs to the data signal **136** and the H/L select signal **138** of the central controller **134**. Stated differently, according to one aspect of this embodiment, an "address" of each of the controllers **34**A–**34**D in the networked lighting system **42**B is determined at least in part by the particular manner in which the controllers **34**A–**34**D are connected to the central controller **134**.

FIG. **4**B is a diagram showing a truth table, which illustrates one example of how the controllers **34**A–**34**D in the networked lighting system **42**B of FIG. **4**A may be "addressed" by the central controller **134**, according to one embodiment of the invention. The truth table shown in FIG. **4**B is based on the particular interconnections between the controllers **34**A–**34**D and the central controller **134** indicated in the connection block **140** shown in FIG. **4**A. For example, according to the truth table of FIG. **4**B, the "mode" signal input $\mathbf{46}A_2$ of the controller **34**A (coupled to the "M" terminal of the connection sub-block **140**A) is provided with data from the data signal **136** of the central controller **134**. As also indicated in the truth table, the controller **34**A processes this data as data intended for it while the "option" signal input $\mathbf{46}A_1$ to the controller **34**A (coupled to the "O" terminal of the connection sub-block **140**A) is in a logic high state, as dictated by the H/L select signal **138** of the central controller **134**. In a similar manner, the truth table in FIG. **4**B indicates that the "mode" signal input $\mathbf{46}B_2$ of the controller **34**B (coupled to the "M" terminal of the connection sub-block **140**B) also is provided with data from the data signal **136** of the central controller **134**. The controller **34**B processes this data as data intended for it while the "option" signal input $\mathbf{46}B_1$ to the controller **34**B (coupled to the "O" terminal of the connection sub-block **140**B) is in a logic low state, as dictated by the H/L select signal **138** of the central controller **134**. The truth table in FIG. **4**B may be interpreted similarly for the controllers **34**C and **34**D, based on the connections indicated in FIG. **4**A.

According to another aspect of this embodiment, each of the controllers **34**A–**34**D shown in FIG. **4**A may be particularly adapted to distinguish between stationary logic level

signals and more rapidly changing data signals applied to the "mode" and "options" signal inputs of each controller, so as to appropriately decode these signals in order to realize the addressing scheme outlined in the truth table of FIG. **4**B. For example, according to one embodiment, each controller monitors a signal rate (e.g., rate of switching between high and low logic states) on each of its "mode" and "options" signal inputs, based, for example, on an expected data rate from the central controller **134**, to determine which one of the data signal **136** and the H/L select signal **138** a given "mode" or "options" signal input is connected to. Based on the periodic monitoring of the signal rate of its "mode" and "options" signals, and the conditions indicated in the truth table of FIG. **4**B, each controller can effectively select and process data particularly intended for it, as output by the central controller **134**.

In yet another aspect of this embodiment, if a controller does not detect the presence of a data signal on either of the "mode" or "options" signal inputs (e.g., for some predetermined time), the controller may automatically default to a "stand-alone" mode. In the "stand-alone" mode, as discussed above in connection with FIG. **2** and further below in connection with other figures, a controller may be controlled by a remote interface (e.g., coupled to the "mode" and "options" signal inputs), and/or may respond to a variety of other external signals. Alternatively, the controller may automatically begin execution of one or more pre-programmed illumination programs.

In another embodiment of the invention, two or more independently controllable light sources of the pool or spa environment shown in FIG. **1** may be synchronized without necessarily being coupled to a network (e.g., as illustrated in FIGS. **4** and **4**A) by monitoring a line frequency of the power supplied to the light sources. Examples of this technique are discussed in greater detail in U.S. provisional application Serial No. 60/290,101, entitled LIGHTING SYNCHRONIZATION WITHOUT A NETWORK, incorporated herein by reference. In this technique, two or more light sources may be connected to the same source of power (e.g., with reference to FIG. **2**, the controller **34** of each light source **24** may be coupled to a power signal **47** from a common source of power, or common power circuit). In one aspect of this embodiment, each of the controllers coupled to the common power circuit monitors the line frequency of the power signal **47** and executes any one of a number of illumination programs in synchronization with the line frequency of the power signal **47**. In this manner, multiple light sources may execute the same illumination program in synchronization, without necessarily being coupled to a data network.

In another aspect of this embodiment, two controllers **34** respectively may be coupled to power signals **47** originating from different power circuits. As a result, the line frequencies of the respective power signals **47** may have some relative phase difference. In this aspect, since the phase difference of the power signals may be measured a priori, the controllers may be particularly adapted to compensate for such a phase difference and thereby still achieve synchronization based on the line frequencies in a manner similar to that discussed above.

FIG. **5** illustrates an example of a remote user interface **56** according to one embodiment of the invention. As discussed above in connection with FIGS. **1** and **4**, the remote user interface **56** may be used to facilitate control of a single light source or of a number of light sources coupled together to form a networked lighting system. In the embodiment shown in FIG. **5**, the remote user interface **56** may include one or more selectors, shown in FIG. **5** as the selectors **60**A–**60**D, to allow a user to remotely control at least one parameter associated with variable color radiation generated by one or more light sources. According to various embodiments of the invention, the selectors **60**A–**60**D may include one or more buttons, adjustable dials, adjustable sliders, adjustable thumb wheels, one or more joy sticks, one or more keypads, touch sensitive pads, switches, and the like.

FIG. **5** also shows that the remote user interface **56** outputs one or more control signals **64** to effect control of one or more light sources. For example, in one aspect of this embodiment, one or more control signals **64** output by the remote user interface **56** may be applied as one or more external signals **46** to a controller **34** associated with a light source **24**, as illustrated in FIG. **2**. Alternatively, as shown in FIG. **4**, the remote user interface **56** may output one or more control signals **64** to the network **48** to control one or more light sources coupled to the network **48**, as well as one or more other devices or accessories associated with the pool or spa that may be coupled to the data network **48**.

In the particular example of a remote user interface **56** shown in the embodiment of FIG. **5**, the remote user interface **56** may be used to select one of three preprogrammed illumination programs, as well as one or more external signals **68** provided as inputs to the remote user interface **56**. In one aspect of this embodiment, the exemplary illumination programs entitled "Color Wash," "Constant Color" and "Random Color," indicated on a panel of the remote user interface **56** shown in FIG. **5**, each may be programmed in one or more storage devices **38** associated with a particular light source **24**, as shown for example in FIG. **2**. Upon activation by a user of one of the selectors **60**A–**60**C associated with the respective pre-programmed illumination programs indicated on the remote user interface **56** shown in FIG. **5**, one or more control signals **64** is output by the remote user interface **56** and received as one or more external signals **46** at the input **45** of the controller **34** shown in FIG. **2**. Upon receiving the one or more external signals **46**, the controller **34** selects the appropriate pre-programmed illumination program from the storage device **38** and executes the program, thereby generating one or more control signals **36** to control the light source **24** in a predetermined manner.

According to yet another embodiment, the remote user interface **56** shown in FIG. **5** may be adapted to receive one or more external signals **68** that may be selected by a user via the selector **60**D of the remote user interface. In one aspect of this embodiment, one or more external signals **68** may be routed through the remote user interface **56**, upon selection by the user of the selector **60**D, to be provided in turn as one or more control signals **64** output by the remote user interface **56**, without being processed by the remote user interface **56**. In another aspect, the remote user interface **56** may provide some processing of the one or more external signals **68** before outputting one or more control signals **64**. According to yet another aspect of this embodiment, a variety of external signals **68** may be provided to the remote user interface **56**; for example, as discussed above in connection with FIG. **2**, with reference to various external signals **46** that may be applied directly to the controller **34**, one or more external signals **68** provided to the remote user interface **56** shown in FIG. **5** may include, but are not limited to, an output of one or more sensors adapted to detect one or more environmental conditions in the environment in or around the pool or spa, as discussed further below in connection with FIG. **8**.

FIG. **6** is a diagram illustrating another example of a remote user interface **56** according to one embodiment of the

invention. As shown in FIG. **6**, the remote user interface **56** of this embodiment includes one or more selectors **60**A and **60**B and one or more processors **58** responsive to operation of the one or more selectors. FIG. **6** also shows that the remote user interface **56** may include one or more storage devices **38**, on which are stored one or more illumination programs **40**A and **40**B, in a manner similar to that described above in connection with FIG. **2**. According to one aspect of this embodiment, the one or more selectors **60**A and **60**B allow the user to remotely select a particular illumination program stored on the storage device **38**. According to another aspect of this embodiment, one or more selectors **60**A and **60**B of the remote user interface **56** may be operated to allow the user to control one or more variable parameters associated with a particular illumination program.

FIG. **6** also shows that the remote user interface **56**, according to one embodiment, may include one or more displays **61** coupled to the processor **58**, to indicate to the user a status of one or more parameters associated with the radiation generated by one or more light sources being controlled by the remote user interface **56**. One example of a display **60** associated with the remote user interface **56** is discussed further below in connection with FIG. **7**.

FIG. **6** also shows that the remote user interface **56**, according to one embodiment, may include one or more communication ports **62** to output one or more control signals **64**. According to one aspect of this embodiment, the communication port **62** also may be adapted to receive one or more external signals **68**. According to another aspect of this embodiment, the communication port **62** may be particularly adapted to support transport of the one or more control signals **64** and/or the one or more external signals **68** via a wire (cable) link or a fiber optic link. Alternatively, according to yet another aspect of this embodiment, the communication port **62** may be particularly adapted to support transport of one or more control signals **64** and one or more external signals **68** via a wireless link.

FIG. **7** is a diagram showing an example of a display **61** associated with the remote user interface **56** shown in FIG. **6**, according to one embodiment of the invention. In the embodiment of FIG. **7**, the display **61** may include an LCD or plasma screen **300**. In one aspect of this embodiment, the display screen **300** may be adapted to include touch-sensitive capabilities so as to simulate one or more selectors, thereby allowing the user to control one or more parameters of the radiation generated by one or more light sources via-the display screen **300**. For example, in one aspect of this embodiment, the display screen **300** may include a touch-sensitive color wheel **302** to display an illumination spectrum and allow a user to select one or more desired colors for illumination of the liquid **22** in the pool or spa **20** by visual inspection of the color wheel. More specifically, in this aspect, the user may place a finger on the desired color displayed in the color wheel, and the remote user interface **56** would control one or more light sources to produce the selected color.

In yet another aspect of the embodiment of the display **60** shown in FIG. **7**, the display screen **300** also may display status information and/or touch-sensitive selectors indicative of one or more variable parameters that are germane to a particular selected illumination program. For example, according to one aspect of this embodiment, upon selection of a pre-programmed illumination program **304** entitled "Color Wash," the display screen **300** may indicate touch-sensitive selectors **305**, **306**, and **307** to allow a user to vary particular parameters germane to the Color Wash illumination program (e.g., Start Color **305**, End Color **306**, and Duration **307**). One or more of the touch-sensitive selectors **305**, **306**, and **307** also may work in tandem with the color wheel **302**; for example, to vary the indicated parameters of the Color Wash program, the user would first activate one of the selectors **305**, **306**, and **307** to indicate the desired action, followed by placing a finger on the desired color on the color wheel corresponding to the desired action (e.g., press Start Color then place finger on red in the color wheel, press End Color then place finger on blue in the color wheel, etc.).

As also shown in FIG. **7**, according to one embodiment, the display screen **300** may indicate one or more touch-sensitive selectors to allow a user to select a different illumination program ("Different Effect" **308**), or to program a custom illumination effect ("Color Play Light Show Authoring" **309**). Various methods and apparatus for authoring custom illumination effects via a remote user interface are discussed in detail in U.S. patent application Ser. No. 09/616,214, entitled AUTHORING A LIGHTING SEQUENCE, and U.S. patent application Ser. No. 09/870,418, entitled METHODS AND APPARATUS FOR AUTHORING AND PLAYING BACK LIGHTING SEQUENCES, which applications are incorporated herein by reference.

FIG. **8** illustrates yet another embodiment of the present invention, in which one or more light sources **24** supported by a pool or spa **20** such as that shown in FIG. **1** are coupled to one or more sensors **92** that output one or more detection signals **94** in response to one or more detectable conditions. In the embodiment of FIG. **8**, the sensor **92** is shown coupled directly to the input **45** of the controller **34**, such that one or more detection signals **94** provide one or more external signals **46** to the controller **34**. It should be appreciated, however, that the invention is not limited in this respect, as one or more sensors **92** may be coupled to one or more controllers associated with one or more light sources in the pool or spa environment, and alternatively may be coupled to a network **48** serving a networked lighting system **42** in the pool or spa environment, as discussed above in connection with FIG. **4**, and further below in connection with FIG. **9**.

According to one embodiment, the sensor **92** shown in FIG. **8** responds to one or more environmental conditions, as discussed, for example, in U.S. application Ser. No. 09/213,607, entitled SYSTEMS AND METHODS FOR SENSOR-RESPONSIVE ILLUMINATION, which application is incorporated herein by reference. In one aspect of this embodiment, the sensor **92** varies one or more detection signals **94** based on changes in the detected environmental condition. Some examples of environmental conditions that may be detected by the sensor **92** include an illumination condition (for which the sensor **92** may be a light sensor), a temperature (for which the sensor **92** may be a temperature sensor), a force (for which the sensor **92** may be a force transducer), and sound waves (for which the sensor **92** may be a pressure transducer, such as a microphone or piezoelectric device). Other examples of detectable environmental conditions may be related to one or more weather conditions such as atmospheric pressure (for which the sensor **92** may be a barometer), and ambient humidity (for which the sensor **92** may be a humidity sensor). Similarly, yet another example of a detectable environmental condition includes a presence of electromagnetic radiation within a particular band of wavelengths. In this case, the sensor **92** may be adapted to output one or more detection signals **94** in response to the presence of the electromagnetic radiation within the particular band of wavelengths. Yet other

examples of detectable environmental conditions include a motion (for which the sensor **92** may be a motion sensor), or a presence of one or more thermal bodies (for which the sensor **92** may be a thermal or infrared detector).

According to another aspect of the embodiment shown in FIG. **8**, one or more detectable conditions monitored by the sensor **92** may include one or more liquid conditions of the liquid **22** in the pool or spa **20** shown in FIG. **1**. In one aspect, the sensor **92** varies one or more detection signals **94** based on changes in one or more liquid conditions monitored by the sensor **92**. For example, the sensor **92** may be adapted to monitor various liquid conditions including, but not limited to, a temperature of the liquid, and/or a concentration of one or more substances in the liquid, such as a salt concentration in the liquid, a chlorine concentration in the liquid, or a bacteria level in the liquid.

In this aspect, the controller **34** may be adapted to control the light source **24** based on the monitored liquid condition. For example, the controller **24** may control the light source **24** to output a first color when the temperature of the liquid is below a predetermined range, and change the first color to a second color when the temperature of the liquid falls within the predetermined range. In this respect, one embodiment of the invention is directed to indicating a "readiness" of the liquid **22** in the pool or spa **20**, via the radiation generated by one or more light sources **24**, based on one or more desirable conditions of the liquid **22**. More specifically, in one aspect of this embodiment, the controller **34** may control the light source **24** to generate a predetermined illumination condition that will indicate to a user when one or more conditions of the liquid (e.g., temperature, salt concentration, chlorine concentration, bacteria levels, etc.) fall within a predetermined desired range.

According to yet another aspect of the embodiment shown in FIG. **8**, one or more detectable conditions monitored by the sensor **92** may include one or more operating conditions of the light source **24**, wherein the sensor **92** is adapted to vary one or more detection signals **94** based on changes in one or more operating conditions of the light source **24**. For example, in one aspect of this embodiment, the sensor **92** may monitor a temperature of the light source **24**. In yet another aspect, the sensor **92** may monitor an electrical current to the light source **24** (e.g., provided by one or more control signals **36** output by the controller **34**). In response to one or more detection signals representing one or more operating conditions of the light source **24** (received as one or more external signals **46**), the controller **34**, according to one embodiment, may control the radiation output by the light source **24** so as to maintain safe operation of the light source **24**. For example, in one aspect of this embodiment, the controller **34** controls the radiation output by the light source **24** so as to maintain one or more operating conditions of the light source **24** within a predetermined "safe" range (e.g., a predetermined temperature range, a predetermined range of electrical currents, etc.). In yet another aspect, the controller **34** may control the radiation output by the light source **24** so as to provide one or more indications to a user, via the radiation output, if the one or more operating conditions monitored by the sensor **92** do not fall within a predetermined range (e.g., the controller may control the light source **24** to flash a particular color repeatedly so as to indicate an unsafe operating condition of the light source **24**).

FIG. **9** is a diagram illustrating another embodiment of the invention, in which one or more light sources **24** are coupled to one or more sensors **92**A and **92**B to form a networked lighting system **42**B. While many of the concepts underlying the network lighting system **42**B are similar to those discussed above in connection with FIG. **4**, FIG. **9** shows that one or more sensors **92**A and **92**B may be coupled to the network lighting system **42**B in a variety of manners to provide one or more detection signals used to control one or more light sources **24**. For example, FIG. **9** shows that a first sensor **92**A is coupled to the remote user interface **56**. In one aspect of this embodiment, the remote user interface **56** may be similar to that shown in FIG. **5**, and include at least one selector **60**D to allow a user to select an external signal provided to the remote user interface **56**. In this regard, one or more detection signals **94**A may be provided as external signals **68** to the remote user interface **56**.

Alternatively, according to another aspect of the embodiment illustrated in FIG. **9**, a second sensor **92**B may be coupled to a computer **96**, which, in turn, provides one or more external signals **68** to the remote user interface **56**. In turn, the remote user interface **56** provides one or more control signals **64** to one or more light sources **24**, based on detection signals received from one or more sensors, either directly or via the computer **96**. Additionally, according to another aspect of this embodiment (as also shown in FIG. **4**), the remote user interface **56**, via the computer **96** shown in FIG. **9**, may be coupled to the Internet **98** such that one or more control signals **64** provided to one or more light sources **24** are derived from information obtained on the Internet. It should be appreciated that a wide variety of configurations are possible in a networked lighting system for the illumination of liquids, according to various embodiments of the invention, and that such configurations are not limited to the specific examples discussed above.

FIG. **10** is a diagram illustrating a controller **34** according to one embodiment of the invention that facilitates control of one or more light sources **24** supported by a pool or spa **20** such as that shown in FIG. **1**, via one or more interruptions in the power signal **47** supplied to the controller **34**. In one aspect of this embodiment, the feature of controlling one or more light sources via interruptions in power may provide an alternative solution for remotely controlling illumination conditions in a liquid illumination environment, by simply toggling a power switch to one or more controllers associated with the light source(s). Hence, according to one aspect of this embodiment, other types of local or remote user interfaces may be unnecessary, thereby facilitating in some cases the retrofitting of novel multi-color controllable light sources into existing pool or spa lighting systems. It should also be appreciated that power interruption control techniques for light sources are not necessarily limited to the pool or spa environment, and may have applicability in other lighting control applications as well.

According to one aspect of this embodiment, with reference to FIG. **10**, the controller **34** may be adapted to control the light source **24** based on one or more interruptions in the power signal **47** supplied to the controller **34**. In this sense, the controller **34** processes the power signal **47** such that the power signal **47** serves as an external control signal, in a manner similar to that of one or more external signals **46** provided at the input **45** to the controller, as discussed above in connection with FIG. **2**.

In another aspect of this embodiment, the controller **34** may be adapted to control the light source **24** based on one or more interruptions in the power signal **47** having an interruption duration that is less than or equal to a predetermined duration. In yet another aspect of this embodiment, if the interruption duration of an interruption in the power signal **47** is greater than the predetermined duration, the controller **34** does not effect any changes in the radiation output by the light source **24**.

In particular, according to one embodiment as illustrated in FIG. **10**, the controller **34** may include a timing circuit **150** to receive as an input the power signal **47**. In one aspect, the controller **34** also may include one or more microprocessors **35**, coupled to the timing circuit **150**, to provide one or more control signals **36** to the light source **24** based on the monitored power signal **47**. In another aspect, the timing circuit **150** may include an RC circuit (not shown explicitly in FIG. **10**) having one or more capacitors that maintain a charge based on the application of the power signal **47** to the timing circuit **150**. In this aspect, a time constant of the RC circuit may be particularly selected based on a desired predetermined duration of an interruption in the power signal **47** that causes the controller **34** (e.g., via the microprocessor **35**) to effect some change in the radiation output by the light source **24**.

For example, according to one aspect of this embodiment, the controller may be adapted to modify one or more variable parameters of one or more illumination programs based on one interruptions in the power signal **47** having less than or equal to the predetermined duration. Alternatively, in another aspect of this embodiment, if a number of illumination programs are stored in a storage device **38** coupled to the controller **34**, the controller **34** may be adapted to select and execute a particular illumination program based on one or more interruptions in the power signal **47** having less than or equal to the predetermined duration.

More specifically, in one aspect of this embodiment, the controller **34** may be adapted to select and execute different illumination programs stored in the storage device **38** based on successive interruptions in the power signal **47**. In this aspect, each illumination program stored in the storage device may be associated with one identifier in a sequence of identifiers (e.g., program 1, program 2, program 3, etc.). The controller **34** may be adapted to sequentially select and execute a different illumination program, based on the sequence of identifiers assigned to the programs, by toggling through the different illumination programs with each successive interruption of the power signal **47** having a duration of less than or equal to the predetermined duration. Furthermore, according to another aspect of this embodiment, if an interruption in the power signal is greater than the predetermined duration, the controller **34** may be adapted not to select and execute a different illumination program, but rather execute the last illumination program selected before the interruption in the power signal that was greater than the predetermined duration (i.e., the illumination program selection will not change on a power-up following interruption in the power signal of a significant duration).

More specifically, in the embodiment shown in FIG. **10**, upon power-up, the microprocessor **35** periodically monitors the timing circuit **150**. In one aspect of this embodiment, if the microprocessor **35** detects a logic high value output by the timing circuit **150** (i.e., the most recent interruption in the power signal **47** was less than the predetermined duration, such that an RC circuit of the timing circuit **150** remained "charged-up"), the microprocessor **35** selects a new illumination program from the storage device **38**. However, if the microprocessor **35** detects a logic low value output by the timing circuit **150** (i.e., the most recent interruption in the power signal **47** was greater than the predetermined duration, such that an RC circuit of the timing circuit **150** was able to significantly discharge), the microprocessor **35** does not select a new illumination program, but rather begins to execute the illumination program that was selected prior to the most recent interruption in the power signal **47**.

Another embodiment of the present invention is directed to a method of indicating to a user, via the color radiation generated by one or more light sources, that a particular illumination program of a number of illumination programs has been selected. For example, with reference again to FIG. **2**, one or more storage devices **38** associated with a controller **34** that controls radiation generated by the light source **24** may store a number of illumination programs (illustrated for example in FIG. **2** as the illumination programs **40**A and **40**B). As discussed above in connection with FIG. **10**, according to one embodiment of the invention, successive interruptions of the power signal **47** provided to the controller **34** may be used to toggle through the illumination programs stored on the storage device **38**, so as to select and execute a particular illumination program. Additionally, as discussed above in connection with FIGS. **5–7**, a remote user interface **56** may be used to select a particular illumination program from a number of such programs stored on the storage device **38**.

In some cases, as a user toggles through multiple illumination programs in order to select a particular illumination program, it may not be immediately apparent to the user which illumination program is selected at any given time. For example, a particular illumination program may be designed such that, when executed, the radiation output from one or more light sources is gradually varied at some predetermined rate to transition between a number of different colors in succession throughout the visible spectrum. An example of such an illumination program is a "color wash" program, as discussed above, which more generally may be referred to as a "dynamic color variation program" having a color variation speed. The color variation speed of such a dynamic color variation program may be either a predetermined or variable parameter of the program. For example, in one case, the color variation speed of the "color wash" illumination program may be predetermined such that the radiation generated by one or more light sources slowly varies in color upon execution of the program to create a soothing varying color illumination effect.

In the current example, it should be appreciated that if a user toggles through a number of illumination programs, including the "color wash" program, the user may not immediately realize that they have selected a dynamic color variation program, such as a color wash program with a slow color variation speed, if they are quickly toggling through the programs. Accordingly, in one embodiment of the invention, one or more variable parameters of a particular illumination program are temporarily modified so as to indicate to the user that the particular illumination program has been selected.

For example, in one aspect of this embodiment, a color variation speed of a dynamic color variation program, such as the "color wash" program, may be temporarily increased upon selection and initial execution of the program to indicate to the user that the program has been selected. In this manner, as a user toggles through a number of illumination programs including dynamic color variation programs, the user is able to more readily realize the selection of such a dynamic color variation program. In the case described above in connection with the color wash program, in one aspect of this embodiment, upon selection of the color wash program, a color of the radiation generated by one or more light sources is rapidly changed for a short period of time upon selection of the program (e.g. 1 to 10 seconds), after which the color variation speed may be automatically decreased to the intended programmed speed (e.g., some nominal color variation speed so as to produce a soothing gradual dynamic color effect).

In the foregoing embodiment, it should be appreciated that a method of indicating to a user the selection of a particular illumination program, via variable color radiation output by one or more light sources, may be used in connection with any of a variety of a dynamic color variation programs including, but not limited, the color wash program described above. Additionally, it should be appreciated that according to other embodiments, the color variation speed of a dynamic color variation program need not be changed, but rather any pattern of radiation may be used (e.g., fast flickering of one or more particular colors) to signify the selection of a particular program.

Another embodiment of the invention is directed to generating variable color radiation in a liquid medium to compensate for various radiation absorption and/or scattering effects due to the liquid medium. In this regard, Applicants have recognized and appreciated that many common liquids, such as water, significantly absorb and/or scatter red color, such that it is more difficult for an observer to detect a presence of red color in the liquid than in air, for example. Additionally, Applicants have recognized and appreciated that in some common pool or spa environments, in which the walls and/or floor of a pool or spa may be constructed with a vinyl lining (in some cases having a bluish color), red color also may be significantly absorbed and/or scattered by the vinyl lining. As an illustrative guideline, a red color in water may decrease in intensity to an observer by as much as approximately 25% or more over a propagation distance of one meter, whereas a green color in water may decrease in intensity by approximately 4% over the same distance. Similarly, a blue color in water may decrease in intensity by only approximately 2% over the same distance.

In view of the foregoing, one embodiment of the invention is directed to a method for generating "liquid hues" to illuminate a liquid, such that when viewed in the liquid by an observer, the liquid hues approximate similar hues observed in non-liquid mediums (e.g., air). More specifically, in one aspect of this embodiment, liquid hues that include radiation having a red color in combination with one or more other colors are generated to approximate a similar hue in a non-liquid medium by increasing the amount of red color included in the liquid hue, to compensate for the absorption and/or scattering of the red color in the liquid medium.

As discussed above, one or more dynamic color illumination programs may be executed in a pool or spa environment to realize a variety of illumination effects. Another embodiment of the invention is directed to methods for dynamic color illumination of a liquid medium that take into consideration the various absorption and scattering effects also discussed above. In particular, in one embodiment of the invention, red color appearing alone is omitted from a dynamic variable color illumination program, due to significant absorption and/or scattering of the red color by the illuminated liquid, so as to prevent the appearance of a lapse or break (i.e., absence of illumination) in the illumination program. For example, according to one embodiment, in the "color wash" illumination program discussed above, red color appearing alone is omitted from the color wash program because, relative to other colors radiated in the liquid, an observer would essentially see little or no hue at all in the liquid if red color alone was radiated into the liquid. It should be appreciated, however, that in one aspect of this embodiment, red color radiation may nonetheless be generated in combination with radiation of one or more other colors to produce a variety of liquid hues, as discussed above.

FIG. **11** is a diagram illustrating another embodiment of the invention directed to a surface mount lighting fixture that may be employed, for example, in a pool or spa environment such as that shown in FIG. **1** to illuminate the liquid **22**. In FIG. **11**, a lighting fixture **100** including a light source **24** is adapted to be mounted on a surface **106** (e.g., the wall **26** of a pool or spa), and has a first dimension **104** that is essentially normal to the surface **106** when the lighting fixture **100** is mounted on the surface. In one aspect of this embodiment, the first dimension **104** preferably is less than approximately 2.5 inches. In yet other aspects, the first dimension **104** is preferably less than 2.25 inches, more preferably less than 2.0 inches, more preferably less than 1.75 inches, more preferably less than 1.5 inches, more preferably less than 1.25 inches, more preferably less than 1.0 inch, and still more preferably as little as approximately 0.5 inches. In another aspect, the thin "depth" dimension **104** of the lighting fixture **100** shown in FIG. **11** renders the fixture particularly suited for use in "niche-less" lighting applications for pool or spa environments, in which one or more lighting fixtures are mounted directly on an inner surface of a pool or spa wall, rather than being recessed in a "niche" in a pool or spa wall. However, it should be appreciated that the invention is not limited in this respect, as the lighting fixture **100** alternatively may be supported in a niche of the pool or spa.

In one aspect of this embodiment, the lighting fixture **100** of FIG. **11** includes one or more mounting mechanisms **108** to mount the lighting fixture **100** to the surface **106**. Examples of mounting mechanisms **108** suitable for purposes of the invention include, but are not limited to, one or more suction mechanisms or one or more magnetic mechanisms to mount the lighting fixture **100** to the surface **106**. In another aspect, as discussed above in connection with various figures, the light source **24** shown in the fixture of FIG. **11** may include one or more LEDs, and may further include two or more differently colored LEDs **32**A–**32**C (e.g., red, green and blue LEDs).

In yet another aspect, the lighting fixture **100** shown in FIG. **11** also may include an essentially water tight lens **110** to prevent the light source **24** from contacting the liquid **22**. In this regard, the lighting fixture **100** also may be particularly adapted to be submersible in the liquid by including an essentially water tight housing **44**, such that the lighting fixture **100** may be disposed below the range **30** of typical liquid levels in the pool or spa.

As also shown in the embodiment of FIG. **11**, in one aspect the lighting fixture **100** is mounted on the inner surface **106** of a wall **26** of a pool or spa such that the lighting fixture does not protrude through the wall **26**. In another aspect, a cable **102** may be coupled to the lighting fixture **100** and mounted to the inner surface **106** of the wall **26** such that no holes are required to be made through the wall **26** below the range **30** of typical liquid levels. Alternatively, in yet another aspect, a small hole may be made through the wall **26** in a portion of the wall on which the lighting fixture **100** is mounted, to accommodate the cable **102** passing through the wall **26**. In this aspect, the lighting fixture **100** (and, more particularly, the one or more mounting mechanisms **108**) may be adapted to make a water tight seal with the inner surface **106**, such that the liquid **22** is unable to leak through the hole.

FIG. **12** is a diagram illustrating another example of a lighting fixture **100** according to one embodiment of the present invention. In the embodiment of FIG. **12**, the lighting fixture **100** is coupled to the wall **26** of the pool or spa by one or more "stand-off" mounting mechanisms **108**,

which allow the liquid **22** to essentially surround the lighting fixture **100**. While the lighting fixture **100** in FIG. **12** is shown mounted to a surface **106** of the wall **26** of the pool or spa, it should be appreciated that, like the fixture shown in FIG. **11**, the lighting fixture of FIG. **12** may be mounted in a niche in the wall **26** of the pool or spa adapted to support the lighting fixture.

Similar to the lighting fixture **100** shown in FIG. **11**, according to one embodiment the lighting fixture **100** shown in FIG. **12** includes a housing **44** and a lens **110**. Additionally, in one aspect, the housing contains a light source **24** that may include one or more LEDs **32**. In another aspect of the embodiment of FIG. **12**, the light source **24** may be mounted on a thermally conductive electrically resistive gap pad **112**, which is in turn attached to a back plate **118** of the housing **44**. As shown in FIG. **12**, the sides of the housing **44** are coupled to the back plate **118** via a rubber seal **114**.

The gap pad **112** shown in FIG. **12** allows heat generated from the light source **24** (and any electronics associated with the light source **24**) to flow to the back plate **118** of the housing **44**, while preventing electrical contact between the light source **24** and the back plate. In one aspect of this embodiment, the back plate **118** may be a metal plate to facilitate the conduction of heat from the light source **24** through the gap pad **112** and into the liquid **22** in contact with the back plate **118**. In other embodiments, the back plate **118** alternatively may be formed from a plastic or rubber material.

In the embodiment of FIG. **12**, although a gap pad **112** is provided to facilitate thermal conduction, it should be appreciated that the gap pad **112** may not be required according to other embodiments. In particular, Applicants have recognized and appreciated that because the lighting fixture **100** shown in FIG. **12** is in substantial contact with the liquid **22**, the liquid **22** may serve as a significant absorber of heat such that heat generated by the light source or associated electronics is effectively absorbed by the liquid **22** via the housing **44**. In this respect, one embodiment of the invention is directed more generally to a light fixture in a liquid illumination environment, wherein the light source **24** of the fixture is particularly positioned in the housing **44** such that heat generated by the light source is effectively absorbed by the liquid **22** in contact with the housing **44**.

In yet another embodiment, the gap pad **112** shown in FIG. **12** may be replaced by another standoff (not shown in FIG. **12**), such that the light source **24** is spaced from, but nonetheless attached to, the back plate **118** (or otherwise attached to the housing **44**). In one aspect of this embodiment, space within the housing between the light source **24** and the housing **44** (or the back plate **118**) may provide sufficient electrical isolation while nonetheless allowing an adequate transfer of heat from the light source **24** through the housing and into the liquid **22**. This concept is further illustrated in the light fixture shown in FIG. **11**, in which the thermal path **122** is illustrated from the light source **24** out through a side of the housing **44** into the liquid **22**.

Another embodiment of the present invention is directed to a light source comprising one or more LEDs and an interface coupled to the one or more LEDs that is adapted to engage mechanically and electrically with a conventional pool or spa light socket. Examples of light sources including one or more LEDs coupled to various interfaces that are adapted to engage with conventional light sockets are discussed in U.S. Pat. No. 6,016,038, as well as U.S. patent application Ser. No. 09/215,624, entitled SMART LIGHT BULB, which application is incorporated herein by reference.

FIG. **13** illustrates one example of this embodiment, showing a light source **24** including one or more LEDs **32** coupled to an interface **70**. The interface **70** illustrated in FIG. **13** is adapted to engage mechanically and electrically with a screw type light socket, conventionally associated with Edison-type incandescent light bulbs, that is supported by the pool or spa **20** shown in FIG. **1**.

FIG. **14** illustrates yet another embodiment of a light source according to the invention, in which the interface **70** is adapted to engage mechanically and electrically with a multi-pin light socket (such as an MR-16 light socket commonly used for halogen light sources) supported by the pool or spa **20** shown in FIG. **1**. According to other aspects of this embodiment, the interface **70** may be adapted to engage mechanically and electrically with bayonet-type light sockets, a variety of multi-pin light sockets, fluorescent light sockets, halogen light sockets, double-ended halogen light sockets, and wedge-type light sockets, as well as a number of other types of light sockets conventionally used in pools or spas.

More specifically, according to one embodiment, a light source **24** including one or more LEDs **32** may be particularly adapted to be supported by a pool or spa by engaging mechanically and electrically with a conventional light socket mounted in a "niche" or indented compartment in a wall **26** of a pool or spa. For example, FIG. **15** illustrates an example of a light fixture **90** adapted to engage mechanically and electrically with a conventional light socket **74** mounted in a niche **130** in a wall **26** of the pool or spa **20**, shown in FIG. **1**. In one aspect of this embodiment, the niche **130** may serve essentially as a water-tight housing **44** for the light fixture **90**, wherein the niche **130** is covered with a water-tight lens or cover **89** once the light fixture **90** is installed in the socket **74**. In other embodiments discussed above, the niche **130** alternatively may be allowed to fill with the liquid **22** contained in the pool or spa, and a lighting fixture similar to those illustrated in FIGS. **3**, **11** and **12** may be supported by the pool or spa in the niche **130** containing the liquid **22**.

Returning to FIG. **15**, according to one embodiment, the light fixture **90** includes a light source **24** having one or more LEDs **32A–32C**, wherein the light source **24** is coupled to an interface **70** adapted to engage mechanically and electrically with a wedge-type light socket **74** supported by the pool or spa. In one aspect, the light fixture **90** also may include a controller **34** and one or more storage devices **38**, as discussed above in connection with FIG. **2**.

In another aspect of the embodiment illustrated in FIG. **15**, the light source **24** and the controller **34** (or any other circuitry associated with light source **24**) may be coated with an encapsulate **72** to protect these components from moisture. In another aspect, the encapsulate may be in contact with the light source **24** and the controller **34** in the form of a conformal coating. In another aspect, the encapsulate may be deposited on the light source and associated circuitry using conventional vacuum deposition techniques. In yet another aspect, the encapsulate may include a potting material in contact with the light source **24** and associated circuitry. In yet another aspect, the encapsulate may be essentially light transmissive. Some examples of encapsulates suitable for purposes of the invention include, but are not limited to, silicones, epoxies, glass resins, polysiloxanes, polyimides, and acrylics. In one embodiment, the encapsulate may be HumiSeal 1B73 aerosol acrylic, available from HumiSeal, Inc., Woodside, N.Y.

As shown in FIG. **15**, according to one embodiment, the interface **70** of the light fixture **90** includes two pins **76**A and **76**B to engage at least electrically with the wedge-type light socket **74**. In one aspect of this embodiment, so as to accommodate such engagement, the pins **76**A and **76**B have respective diameters **78**A and **78**B of approximately 0.09 inches. In yet another aspect of this embodiment, each of the pins **76**A and **76**B has a length **80** of approximately 0.46 inches. In yet another aspect of this embodiment, the two pins **76**A and **76**B are separated from each other by a distance **82** of approximately 0.25 inches.

In yet another aspect of the embodiment illustrated in FIG. **15**, one or both of the pins **76**A and **76**B may include one or more perturbations, shown in FIG. **15** as indented grooves **84**A and **84**B in the pins **76**A and **76**B, respectively, to facilitate mechanical engagement of the interface **70** and the wedge-type light socket **74**. Although the perturbations **84**A and **84**B are illustrated in FIG. **15** as indented grooves, it should be appreciated that the invention is not limited in this respect, as one or more perturbations in the pins of the interface may include a protruding ring, as shown in FIG. **16**A. Additionally, it should be appreciated that one or more perturbations to facilitate mechanical engagement may be formed at least partially around a circumference of a pin or may be formed completely around the circumference of the pin in a continuous fashion. In yet another aspect, as illustrated in FIG. **15** by the perturbation **84**A, a perturbation may be located at a distance **86** approximately 0.17 inches from an end of the pin.

In yet another aspect of the embodiment shown in FIG. **15**, the interface **70** may include a rubber grommet **88** to further facilitate mechanical engagement of the interface **70** and the wedge-type light socket **74**. It should be appreciated that according to other embodiments, the interface **70** shown in FIG. **15** may include the rubber grommet **88** alone or in combination with one or more perturbations in the pins to facilitate mechanical engagement. Similarly, in yet another embodiment, one or more perturbations in the pins provide for adequate mechanical engagement with the socket without the use of the rubber grommet **88**.

FIG. **16**B is a diagram showing a more detailed view of a pin **76** of the light fixture **90** shown in FIG. **16**, according to one embodiment of the invention. According to one aspect of this embodiment, exemplary values for various indicated pin dimensions (in inches) are as follows: A=0.059, B=0.067, D=0.005, E=0.020, F=0.100, G=0.115, H=0.588, I=0.836, J=0.848, K=0.878, L=0.891, M=1.046, N=0.090, 0=0.065, P=0.158. Also, an exemplary value for the angle C indicated in FIG. **16**B is 45 degrees. FIG. **16**B illustrates in greater detail that the pin **76** may include an indented groove perturbation **84** formed continuously around the pin. FIG. **16**B also illustrates that, according to one aspect of this embodiment, the pin **76** may include a widened portion **87** that passes through the rubber grommet **88** and connects to a narrower portion **91** of the pin to which electrical connections may be made.

FIG. **17** is a diagram showing yet another embodiment of the invention directed to a liquid illumination apparatus **151**. In one aspect of this embodiment, the apparatus **150** may include a housing **44** having a variety of ring-like shapes including, but not limited to, circular, triangular, square, octagonal, or any other geometric shape. In the embodiment specifically illustrated in FIG. **17**, the housing **44** of the apparatus **150** is shaped essentially as a donut, and is designed to allow the flow of liquid **22** through the center and/or around an outer perimeter of the apparatus **150**. Similar to the light sources discussed in the previous figures, the liquid illumination apparatus **150** may include one or more light sources **24**, which further may include one or more LEDs **32**. In the apparatus **150**, radiation generated by the light source **24** is coupled to the flow of the liquid **22** as the liquid passes through and/or around the apparatus **150**. In particular, in one aspect of this embodiment, one or more LEDs **32** are arranged to direct radiation into the flow of the liquid **22** to illuminate the liquid. As discussed above in connection with other embodiments, the apparatus **150** may include a local user interface **43**, and may be adapted to receive one or more external signals **46** and a power signal **47**. Additionally, according to other aspects, the apparatus **150** may include one or more controllers and one or more storage devices, as discussed above in connection with FIG. **2**.

FIG. **18** is a diagram illustrating yet another embodiment of a liquid illumination apparatus **152** according to the present invention. In one aspect of this embodiment, the apparatus **152** may be adapted for use as a sprinkler which couples radiation generated by one or more light switches **24** into a stream of liquid **22** emanating from the apparatus **152**. In this aspect, the apparatus **152** couples the radiation generated by the light sources **24** with the stream of the liquid **22** to provide colored effects, for example while watering a lawn, or in a decorative setting such as, but not limited to, a pool, spa, or water fountain. While not shown exclusively in FIG. **18**, the apparatus **152** similarly may be adapted as the apparatus **151** shown in FIG. **17** to include a local user interface **43**, and to receive one or more external signals **46** and a power signal **47** for operation of the apparatus **152**.

FIG. **19** is a diagram illustrating yet another embodiment of the invention directed to a water faucet **154** adapted to illuminate a stream or liquid **22** (e.g., water) with radiation generated by one or more light sources **24** supported by the faucet **154**. In one aspect of this embodiment, the light source **24** includes two or more differently colored LEDs, to provide illumination of the stream of liquid **22** with a variety of variable color lighting effects. In one aspect of this embodiment, the light source **24** includes a plurality of red, blue and green LEDs, as discussed above in connection with FIG. **2**. In yet another aspect of this embodiment, as discussed above in connection with FIG. **8**, the light source **24** supported by the faucet **154** may be responsive to one or more detection signals output by one or more sensors that are employed to monitor one or more conditions related to the stream of liquid **22** exiting the faucet **154**. For example, in one embodiment, a temperature of the liquid **22** flowing from the faucet **154** may be monitored by a sensor **92**, and an output **94** of the sensor may be employed to control the light source **24**, such that the radiation generated by the light source **24** varies with changes in the monitored temperature of the liquid **22**.

FIG. **20** illustrates yet another embodiment of the invention directed to illumination of liquids. In the embodiment of FIG. **20**, a sink or basin **156** contains a liquid **22** and one or more light sources **24** coupled to the basin. In one aspect of this embodiment, the sink or basin **156** is made of transparent, translucent, semi-transparent, or semi-translucent material, or other materials which allow the transmission or partial transmission of radiation generated by one or more light sources **24** to illuminate a liquid **22** contained in the basin **156**. As discussed above in connection with FIG. **19**, the sink or basin **156** also may be equipped with a sensor **92** which outputs one or more signals **94** to control one or more light sources **24** as discussed above in connection FIG. **9**.

According to yet another embodiment of the invention, a flow of liquid **22**, for example as illustrated in FIGS. **17**, **18** and **19**, may be used to power one or more light sources **24** described in various embodiments herein. Additionally, according to another embodiment, one or more light sources **24** as discussed herein may be powered by other illumination sources, for example sources of solar energy.

In the embodiments of the invention discussed above, various processors and controllers can be implemented in numerous ways, such as with dedicated hardware, or using one or more processors (e.g., microprocessors) that are programmed using software (e.g., microcode) to perform the various functions discussed above. Similarly, storage devices can be implemented in numerous ways, such as, but not limited to, RAM, ROM, PROM, EPROM, EEPROM, CD, DVD, optical disks, floppy disks, magnetic tape, and the like.

For purposes of the present disclosure, the term "LED" refers to any diode or combination of diodes that is capable of receiving an electrical signal and producing a color of light in response to the signal. Thus, the term "LED" as used herein should be understood to include light emitting diodes of all types (including semi-conductor and organic light emitting diodes), semiconductor dies that produce light in response to current, light emitting polymers, electro-luminescent strips, and the like. Furthermore, the term "LED" may refer to a single light emitting device having multiple semiconductor dies that are individually controlled. It should also be understood that the term "LED" does not restrict the package type of an LED; for example, the term "LED" may refer to packaged LEDs, non-packaged LEDs, surface mount LEDs, chip-on-board LEDs, and LEDs of all other configurations. The term "LED" also includes LEDs packaged or associated with other materials (e.g., phosphor, wherein the phosphor may convert radiant energy emitted from the LED to a different wavelength).

Additionally, as used herein, the term "light source" should be understood to include all illumination sources, including, but not limited to, LED-based sources as defined above, incandescent sources (e.g., filament lamps, halogen lamps), pyro-luminescent sources (e.g., flames), candle-luminescent sources (e.g., gas mantles), carbon arc radiation sources, photo-luminescent sources (e.g., gaseous discharge sources), fluorescent sources, phosphorescent sources, high-intensity discharge sources (e.g., sodium vapor, mercury vapor, and metal halide lamps), lasers, electro-luminescent sources, cathode luminescent sources using electronic satiation, galvano-luminescent sources, crystallo-luminescent sources, kine-luminescent sources, thermo-luminescent sources, triboluminescent sources, sonoluminescent sources, radioluminescent sources, and luminescent polymers capable of producing primary colors.

For purposes of the present disclosure, the term "illuminate" should be understood to refer to the production of a frequency (or wavelength) of radiation by an illumination source (e.g., a light source). Furthermore, as used herein, the term "color" should be understood to refer to any frequency (or wavelength) of radiation within a spectrum; namely, "color" refers to frequencies (or wavelengths) not only in the visible spectrum, but also frequencies (or wavelengths) in the infrared, ultraviolet, and other areas of the electromagnetic spectrum. Similarly, for purposes of the present disclosure, the term "hue" refers to a color quality of radiation that is observed by an observer. In this sense, it should be appreciated that an observed hue of radiation may be the result of a combination of generated radiation having different wavelengths (i.e., colors), and may be affected by a medium through which the radiation passes before being observed (due to radiation absorption and/or scattering effects in the medium).

For purposes of the present disclosure, the term "pool" is used generally to describe a vessel containing a liquid (e.g., water), that may be used for any number of utilitarian, entertainment, recreational, therapeutic, or sporting purposes. As used herein, a pool may be for human use (e.g., swimming, bathing) or may be particularly designed for use with wildlife (e.g., an aquarium for fish, other aquatic creatures, and/or aquatic plant life). Additionally, a pool may be man made or naturally occurring and may have a variety of shapes and sizes. Furthermore, a pool may be constructed above ground or below ground, and may have one or more discrete walls or floors, one or more rounded surfaces, or combinations of discrete walls, floors, and rounded surfaces. Accordingly, it should be appreciated that the term "pool" as used herein is intended to encompass various examples of water containing vessels such as, but not limited to, tubs, sinks, basins, baths, tanks, fish tanks, aquariums and the like.

Similarly, for purposes of the present disclosure, the term "spa" is used herein to describe a type of pool that is particularly designed for a variety of entertainment, recreational, therapeutic purposes and the like. Some other commonly used terms for a spa include, but are not limited to, "hot-tub," "whirlpool bath" and "Jacuzzi." Generally, a spa may include a number of accessory devices, such as one or more heaters, blowers, jets, circulation and filtration devices to condition water in the spa, as well as one or more light sources to illuminate the water in the spa. For purposes of the present disclosure, it also should be appreciated that a pool as described above may be divided up into one or more sections, and that one or more of the pool sections can be particularly adapted for use as a spa.

Having thus described several illustrative embodiments of the invention, various alterations, modifications, and improvements will readily occur to those skilled in the art. Such alterations, modifications, and improvements are intended to be within the spirit and scope of the invention. Accordingly, the foregoing description is by way of example only, and is not intended as limiting. The invention is limited only as defined in the following claims and the equivalents thereto.

What is claimed is:

1. An apparatus, comprising:

one of a pool and a spa to contain a liquid;

at least one light source, supported by the one of the pool and the spa, to illuminate the liquid, the at least one light source being positioned so as to illuminate the liquid with substantially unguided radiation;

at least one sensor to output at least one detection signal in response to a detectable condition; and

at least one controller, coupled to the at least one light source and the at least one sensor, to control radiation output by the at least one light source based on the at least one detection signal.

2. The apparatus of claim **1**, wherein the one of the pool and the spa has a range of typical liquid levels of the liquid during use, and wherein the at least one light source is adapted to be disposed below the range of typical liquid levels.

3. The apparatus of claim **2**, wherein the at least one light source includes means for engaging the at least one light source mechanically and electrically with a conventional light socket supported by the one of the pool and the spa.

4. The apparatus of claim **2**, further including an encapsulant, in contact with at least the at least one light source, to protect the at least one light source from moisture.

5. The apparatus of claim 1, wherein the at least one light source includes at least one LED.

6. The apparatus of claim 5, wherein the at least one LED includes at least two differently colored LEDs.

7. The apparatus of claim 5, wherein the at least one LED includes at least one red LED, at least one green LED, and at least one blue LED.

8. The apparatus of claim 1, wherein the at least one light source includes at least one lens.

9. The apparatus of claim 6, wherein the at least one light source includes at least one lens.

10. An apparatus, comprising:

one of a pool and a spa to contain a liquid;

at least one light source, supported by the one of the pool and the spa, to illuminate the liquid;

at least one sensor to output at least one detection signal in response to a detectable condition; and

at least one controller, coupled to the at least one light source and the at least one sensor, to control radiation output by the at least one light source based on the at least one detection signal,

wherein the at least one detectable condition includes at least one environmental condition in or external to the liquid, and wherein the at least one sensor is adapted to output the at least one detection signal in response to the at least one environmental condition.

11. The apparatus of claim 10, wherein:

the at least one environmental condition includes an illumination condition in or external to the liquid; and

the at least one sensor includes at least one light sensor.

12. The apparatus of claim 10, wherein:

the at least one environmental condition includes a temperature in or external to the liquid; and

the at least one sensor includes at least one temperature sensor.

13. The apparatus of claim 10, wherein:

the at least one environmental condition includes a force in or external to the liquid; and

the at least one sensor includes at least one force transducer.

14. The apparatus of claim 10, wherein:

the at least one light source is positioned so as to illuminate the liquid with substantially unguided radiation;

the at least one environmental condition includes at least one sound wave in or external to the liquid; and

the at least one sensor includes at least one pressure transducer.

15. The apparatus of claim 10, wherein:

the at least one environmental condition includes at least one weather condition external to the liquid; and

the at least one sensor is adapted to output the at least one detection signal in response to the at least one weather condition.

16. The apparatus of claim 15, wherein:

the at least one weather condition includes an atmospheric pressure; and

the at yeast one sensor includes at least one barometer.

17. The apparatus of claim 15, wherein:

the at least one weather condition includes an ambient humidity; and

the at least one sensor includes at least one humidity sensor.

18. The apparatus of claim 10, wherein:

the at least one environmental condition includes a presence of electromagnetic radiation within a particular band of wavelengths in or external to the liquid; and

the at least one sensor is adapted to output the at least one detection signal in response to the presence of the electromagnetic radiation within the particular band of wavelengths.

19. The apparatus of claim 10, wherein:

the at least one environmental condition includes a motion in or external to the liquid; and

the at least one sensor includes at least one motion sensor.

20. The apparatus of claim 10, wherein:

the at least one environmental condition includes a presence of at least one thermal body in or external to the liquid; and

the at least one sensor includes at least one thermal detector.

21. The apparatus of claim 10, wherein the at least one sensor is adapted to vary the at least one detection signal based on changes in the at least one environmental condition.

22. The apparatus of claim 10, wherein the at least one light source includes at least two differently colored LEDs.

23. An apparatus, comprising:

one of a pool and a spa to contain a liquid;

at least one light source, supported by the one of the pool and the spa, to illuminate the liquid;

at least one sensor to output at least one detection signal in response to a detectable condition; and

at least one controller, coupled to the at least one light source and the at least one sensor, to control radiation output by the at least one light source based on the at least one detection signal,

wherein the at least one detectable condition includes at least one liquid condition of the liquid, and wherein the at least one sensor is adapted to output the at least one detection signal in response to the at least one liquid condition.

24. The apparatus of claim 23, wherein the at least one liquid condition includes a concentration of at least one substance in the liquid.

25. The apparatus of claim 24, wherein the at least one liquid condition includes a salt concentration in the liquid.

26. The apparatus of claim 24, wherein the at least one liquid condition includes a chlorine concentration in the liquid.

27. The apparatus of claim 23, wherein the at least one liquid condition includes a bacteria level in the liquid.

28. The apparatus of claim 23, wherein the at least one sensor is adapted to vary the at least one detection signal based on changes in the at least one liquid condition.

29. The apparatus of claim 23, wherein the at least one liquid condition includes a temperature of the liquid.

30. The apparatus of claim 23, wherein the at least one light source includes at least two differently colored LEDs.

31. An apparatus, comprising:

one of a pool and a spa to contain a liquid;

at least one light source, supported by the one of the pool and the spa, to illuminate the liquid; and

at least one sensor to output at least one detection signal in response to a detectable

at least one controller, coupled to the at least one light source and the at least one sensor, to control radiation

output by the at least one light source based on the at least one detection signal,

wherein the at least one detectable condition includes at least one operating condition of the at least one light source, and wherein the at least one sensor is adapted to output the at least one detection signal in response to the at least one operating condition.

32. The apparatus of claim **31**, wherein the at least one controller controls the radiation output by the at least one light source based on the at least one detection signal so as to maintain safe operation of the at least one light source.

33. The apparatus of claim **32**, wherein the at least one controller controls the radiation output by the at least one light source based on the at least one detection signal so as to maintain the at least one operating condition of the at least one light source within a predetermined range.

34. The apparatus of claim **32**, wherein the at least one controller controls the radiation output by the at least one light source based on the at least one detection signal so as to provide at least one indication to a user via the radiation output if the at least one operating condition of the at least one light source does not fall within a predetermined range.

35. The apparatus of claim **31**, wherein the at least one sensor is adapted to vary the at least one detection signal based on changes in the at least one operating condition.

36. The apparatus of claim **31**, wherein the at least one operating condition includes a temperature of the at least one light source.

37. The apparatus of claim **31**, wherein the at least one operating condition includes an electrical current of the at least one light source.

38. The apparatus of claim **31**, wherein the at least one light source includes at least two differently colored LEDs.

39. A method for illuminating a liquid in one of a pool and a spa, comprising acts of:

a) illuminating the liquid in the one of the pool and the spa with variable color radiation; and

b) controlling the variable color radiation based on at least one detectable condition, wherein the act b) comprises acts of:

determining a readiness for use of the liquid based on the at least one detectable condition; and

controlling the variable color radiation so as to indicate to a user the readiness for use of the liquid.

40. The method of claim **39**, wherein the act a) includes an act of:

illuminating the liquid with variable color radiation output by at least two differently colored LEDs.

41. A method for illuminating a liquid in one of a pool and a spa, comprising acts of:

a) illuminating the liquid in the one of the pool and the spa with variable color radiation: and

b) controlling the variable color radiation based on at least one detectable condition,

wherein the at least one detectable condition includes at least one environmental condition in or external to the liquid, and wherein the act b) comprises an act of:

controlling the variable color radiation based on the at least one environmental condition.

42. The method of claim **41**, wherein the at least one environmental condition includes an illumination condition in or external to the liquid, and wherein the act b) comprises an act of:

controlling the variable color radiation based on the at least one illumination condition.

43. The method of claim **41**, wherein the at least one environmental condition includes a temperature in or external to the liquid, and wherein the act b) comprises an act of:

controlling the variable color radiation based on the temperature.

44. The method of claim **41**, wherein the at least one environmental condition includes a force in or external to the liquid, and wherein the act b) comprises an act of:

controlling the variable color radiation based on the force.

45. The method of claim **41**, wherein the variable color radiation is substantially unguided variable color radiation, wherein the at least one environmental condition includes at least one sound wave in or external to the liquid, and wherein the act b) comprises an act of:

controlling the substantially unguided variable color radiation based on the at least one sound wave.

46. The method of claim **41**, wherein the at least one environmental condition includes at least one weather condition, and wherein the act b) comprises an act of:

controlling the variable color radiation based on the at least one weather condition.

47. The method of claim **46**, wherein the at least one weather condition includes an atmospheric pressure, and wherein the act b) comprises an act of:

controlling the variable color radiation based on the atmospheric pressure.

48. The method of claim **46**, wherein the at least one weather condition includes an ambient humidity, and wherein the act b) comprises an act of:

controlling the variable color radiation based on the ambient humidity.

49. The method of claim **41**, wherein the at least one environmental condition includes a presence of electromagnetic radiation within a particular band of wavelengths in or external to the liquid, and wherein the act b) comprises an act of:

controlling the variable color radiation based on the presence of the electromagnetic radiation within the particular band of wavelengths.

50. The method of claim **41**, wherein the at least one environmental condition includes a motion in or external to the liquid, and wherein the act b) comprises an act of:

controlling the variable color radiation based on the motion.

51. The method of claim **41**, wherein the at least one environmental condition includes a presence of at least one thermal body in or external to the liquid, and wherein the act b) comprises an act of:

controlling the variable color radiation based on the presence of the at least one thermal body.

52. The method of claim **41**, wherein the act b) comprises an actor:

varying the variable color radiation based on changes in the at least one environmental condition.

53. The method of claim **41**, wherein the act a) includes an act of:

illuminating the liquid with variable color radiation output by at least two differently colored LEDs.

54. A method for illuminating a liquid in one of a pool and a spa, comprising acts of:

a) illuminating the liquid in the one of the pool and the spa with variable color radiation; and

b) controlling the variable color radiation based on at least one detectable condition,

wherein the at least one detectable condition includes at least one liquid condition of the liquid, and wherein the act b) comprises an act of:

controlling the variable color radiation based on the at least one liquid condition.

55. The method of claim 54, wherein the at least one liquid condition includes a concentration of at least one substance in the liquid, and wherein the act b) comprises an act of:

controlling the variable color radiation based on the concentration of the at least one substance in the liquid.

56. The method of claim 55, wherein the at least one liquid condition includes a salt concentration in the liquid, and wherein the act b) comprises an act of:

controlling the variable color radiation based on the salt concentration in the liquid.

57. The method of claim 55, wherein the at least one liquid condition includes a chlorine concentration in the liquid, and wherein the act b) comprises an act of:

controlling the variable color radiation based on the chlorine concentration in the liquid.

58. The method of claim 54, wherein the at least one liquid condition includes a bacteria level in the liquid, and wherein the act b) comprises an act of:

controlling the variable color radiation based on the bacteria level in the liquid.

59. The method of claim 54, wherein the act b) comprises an act of:

varying die variable color radiation based on changes in the at least one liquid condition.

60. The method of claim 54, wherein the at least one liquid condition includes a temperature of the liquid, and wherein the act b) comprises an act of:

controlling the variable color radiation based on the temperature of the liquid.

61. The method of claim 54, wherein the act a) includes an act of:

illuminating the liquid with variable color radiation output by at least two differently colored LEDs.

62. A method for illuminating a liquid in one of a pool and a spa, comprising acts of:

a) illuminating the liquid in the one of the pool and the spa with variable color radiation; and

b) controlling the variable color radiation based on at least one detectable condition,

wherein the at least one detectable condition includes at least one operating condition of at least one light source that generates the variable color radiation, and wherein the act b) comprises an act of:

controlling the variable color radiation based on the at least one operating condition of the at least one light source.

63. The method of claim 62, wherein the act b) comprises an act of:

b1) controlling the variable color radiation based on the at least one operating condition so as to maintain safe operation of the at least one light source.

64. The method of claim 63, wherein the act b1) includes an act of:

controlling the variable color radiation so as to maintain the at least one operating condition of the at least one light source within a predetermined range.

65. The method of claim 63, wherein the act b1) includes an act of:

controlling the variable color radiation so as to provide at least one indication to a user if the at least one operating condition of the at least one light source does not fall within a predetermined range.

66. The method of claim 62, wherein the act b) comprises an act of:

varying the variable color radiation based on changes in the at least one operating condition.

67. The method of claim 62, wherein the at least one operating condition includes an operating temperature of the at least one light source, and wherein the act b) comprises an act of:

controlling the variable color radiation based on the operating temperature of the at least one light source.

68. The method of claim 62, wherein the at least one operating condition includes an electrical current of the at least one light source, and wherein the act b) comprises an act of:

controlling the variable color radiation based on the electrical current of the at least one light source.

69. The method of claim 52, wherein the act a) includes an act of:

illuminating the liquid with variable color radiation output by at least two differently colored LEDs.

70. A method for illuminating a liquid, comprising acts of:

illuminating the liquid with substantially unguided radiation output simultaneously by at least two differently colored LEDs; and

controlling the radiation based on at least one detectable condition.

71. An apparatus, comprising:

at least one light source to illuminate a liquid, the at least one light source including at least two differently colored LEDs to generate variable color radiation, the at least one light source being positioned so as to illuminate the liquid with substantially unguided radiation;

at least one sensor to output at least one detection signal in response to a detectable condition; and

at least one controller, coupled to the at least one light source and the at least one sensor, to control the variable color radiation generated by the at least one light source based on the at least one detection signal.

72. The apparatus of claim 71, wherein the at least one light source includes at least one lens.

73. An apparatus, comprising:

one of a pool and a spa to contain a liquid;

at least one light source, supported by the one of the pool and the spa, to illuminate the liquid;

at least one sensor to output at least one detection signal in response to a detectable condition; and

at least one controller, coupled to the at least one light source and the at least one sensor, to control radiation output by the at least one light source based on the at least one detection signal,

wherein the at least one controller is adapted to determine a readiness for use of the liquid based on the at least one detection signal, and is further adapted to control the radiation output by the at least one light source so as to indicate to a user the readiness for use of the liquid.

74. The apparatus of claim 73, wherein the at least one light source includes at least two differently colored LEDs.

75. A method for illuminating a liquid in one of a pool and a spa, comprising acts of:

a) illuminating the liquid in the one of the pool and the spa with substantially unguided variable color radiation; and

b) controlling the variable color radiation based on at least one detectable condition.

76. The method of claim 75, wherein the act b) comprises an act of:

controlling at least one of an intensity and a color of the variable color radiation based on the at least one detectable condition.

77. An apparatus, comprising:

one of a pool and a spa to contain a liquid;

at least one light source, supported by the one of the pool and the spa, to illuminate the liquid;

at least one sensor to output at least one detection signal in response to a detectable condition; and

at least one controller, coupled to the at least one light source and the at least one sensor, to control radiation output by the at least one light source based on the at least one detection signal,

wherein the one of the pool and the spa has a range of typical liquid levels of the liquid during use, and wherein the at least one light source is adapted to be disposed below the range of typical liquid levels,

and wherein the at least one light source includes means for engaging the at least one light source mechanically and electrically with a conventional light socket supported by the one of the pool and the spa.

78. The apparatus of claim **77**, wherein the at least one light source includes at least two differently colored LEDs.

79. The apparatus of claim **78**, wherein the at least one light source includes at least one lens.

* * * * *