US 20140130374A1

(19) United States

(12) Patent Application Publication

Minami et al.

(10) Pub. No.: US 2014/0130374 A1

(43) Pub. Date: May 15, 2014

(54) **ARTICLE OF FOOTWEAR INCORPORATING A KNITTED COMPONENT**

(71) Applicant: **NIKE, INC**, Beaverton, OR (US)

(72) Inventors: **Tetsuya T. Minami**, Portland, OR (US); **James Molyneux**, Portland, OR (US); **Doug D. Wilken**, Hillsboro, OR (US); **Phil Woodman**, Treviso (IT)

(21) Appl. No.: **13/944,689**

(22) Filed: **Jul. 17, 2013**

Related U.S. Application Data

(60) Provisional application No. 61/727,010, filed on Nov. 15, 2012.

Publication Classification

(51) **Int. Cl.**
A43B 1/04 (2006.01)

(52) **U.S. Cl.**
CPC *A43B 1/04* (2013.01)
USPC **36/84**

(57) **ABSTRACT**

An article of footwear has an upper and a sole structure secured to the upper. The upper includes a knitted component and, in some configurations, a skin layer secured to the knitted component. The knitted component may have a plurality of protruding areas that extend outward and away from a void within the upper for receiving a foot of a wearer. The protruding areas may include one or both of (a) a first tubular structure and an inlaid strand extending through the first tubular structure and (b) a second tubular structure and yarn sections extending across the second tubular structure.

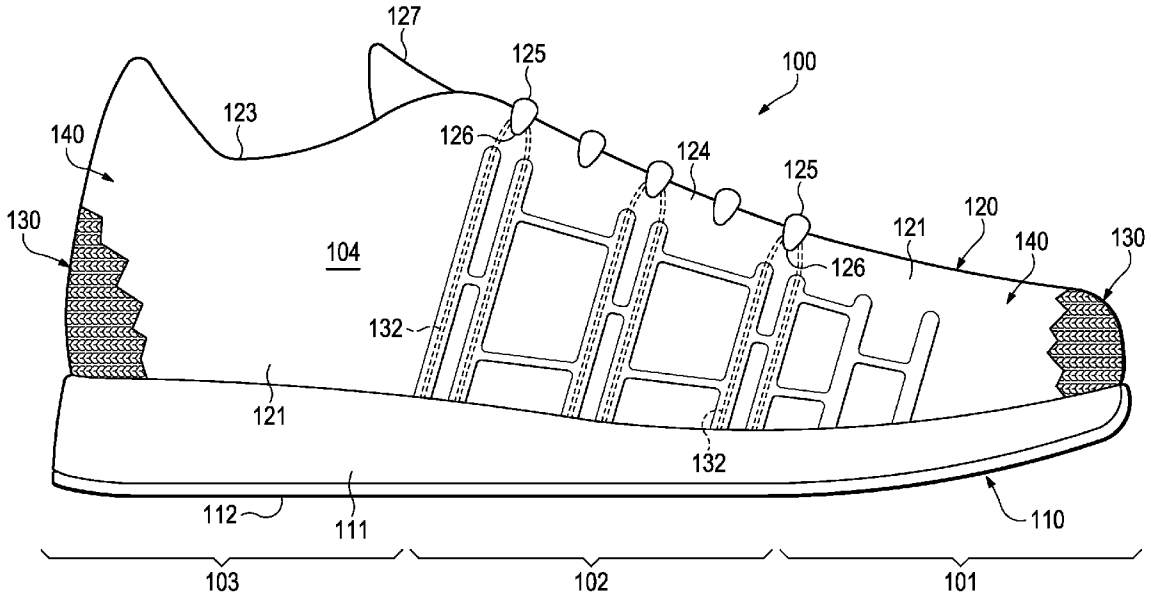

lululemon Ex. 1007
IPR Petition - USP 9,375,046

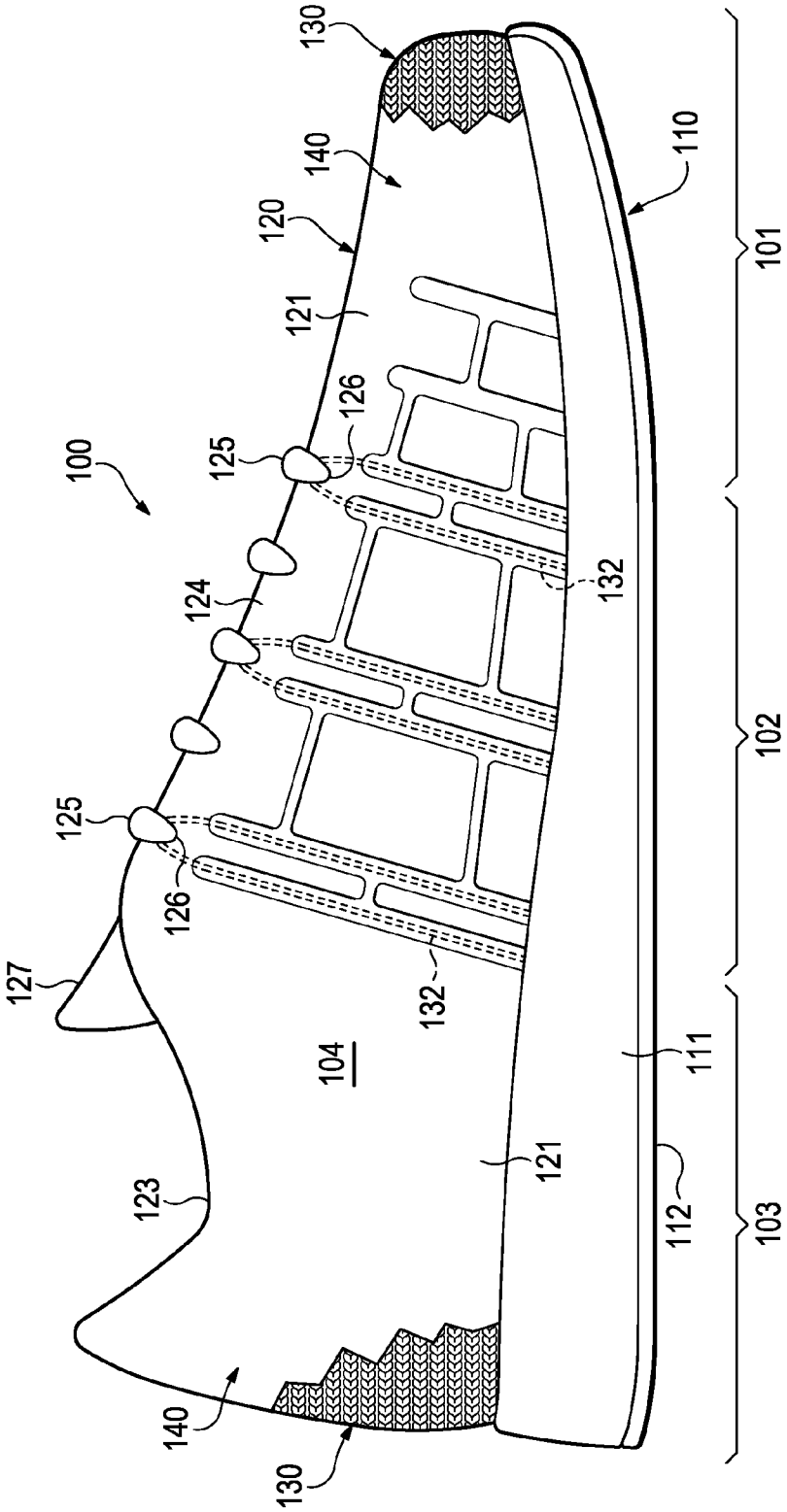

Figure 1

lululemon Ex. 1007
IPR Petition - USP 9,375,046

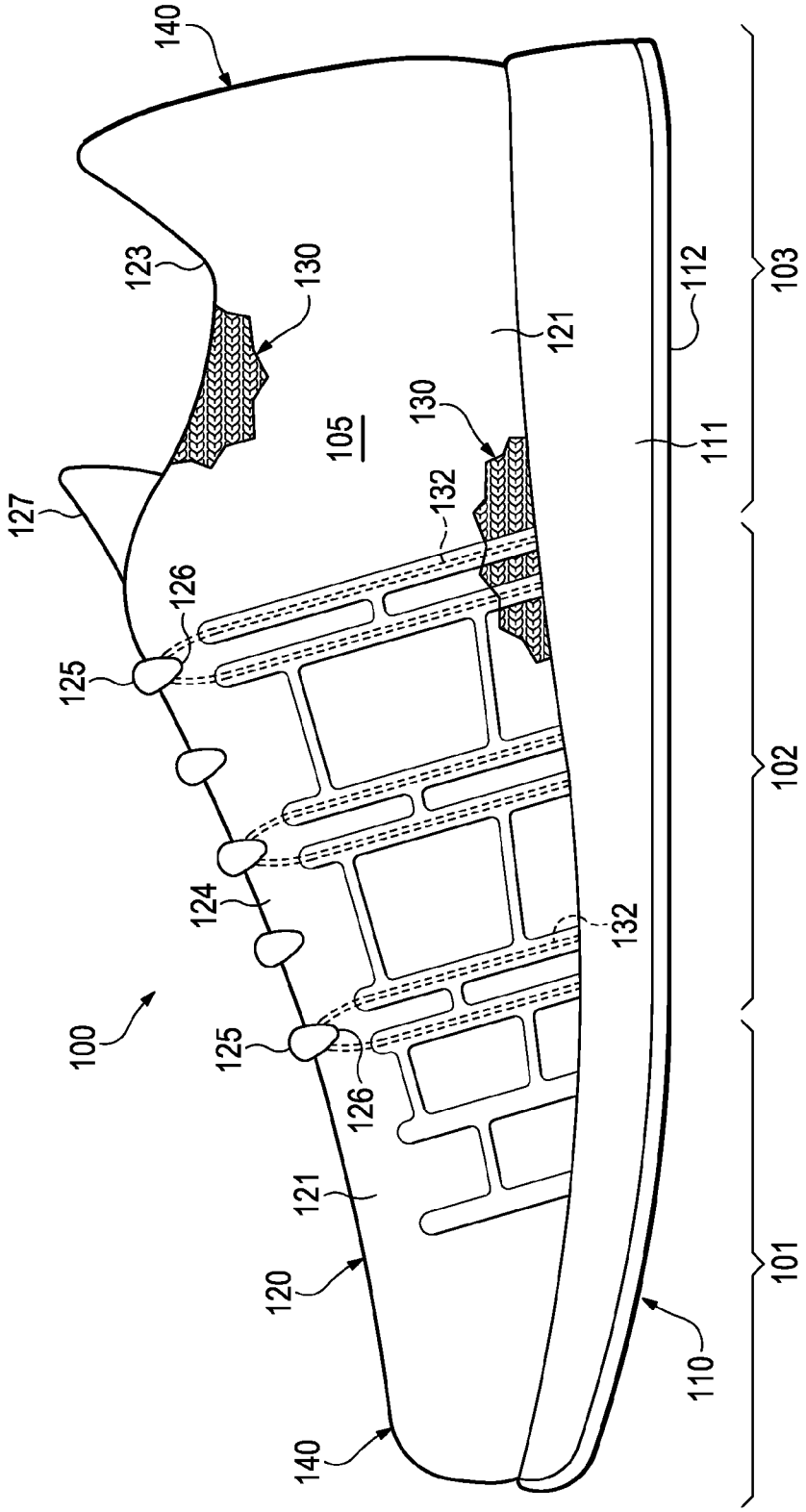

Figure 2

lululemon Ex. 1007
IPR Petition - USP 9,375,046

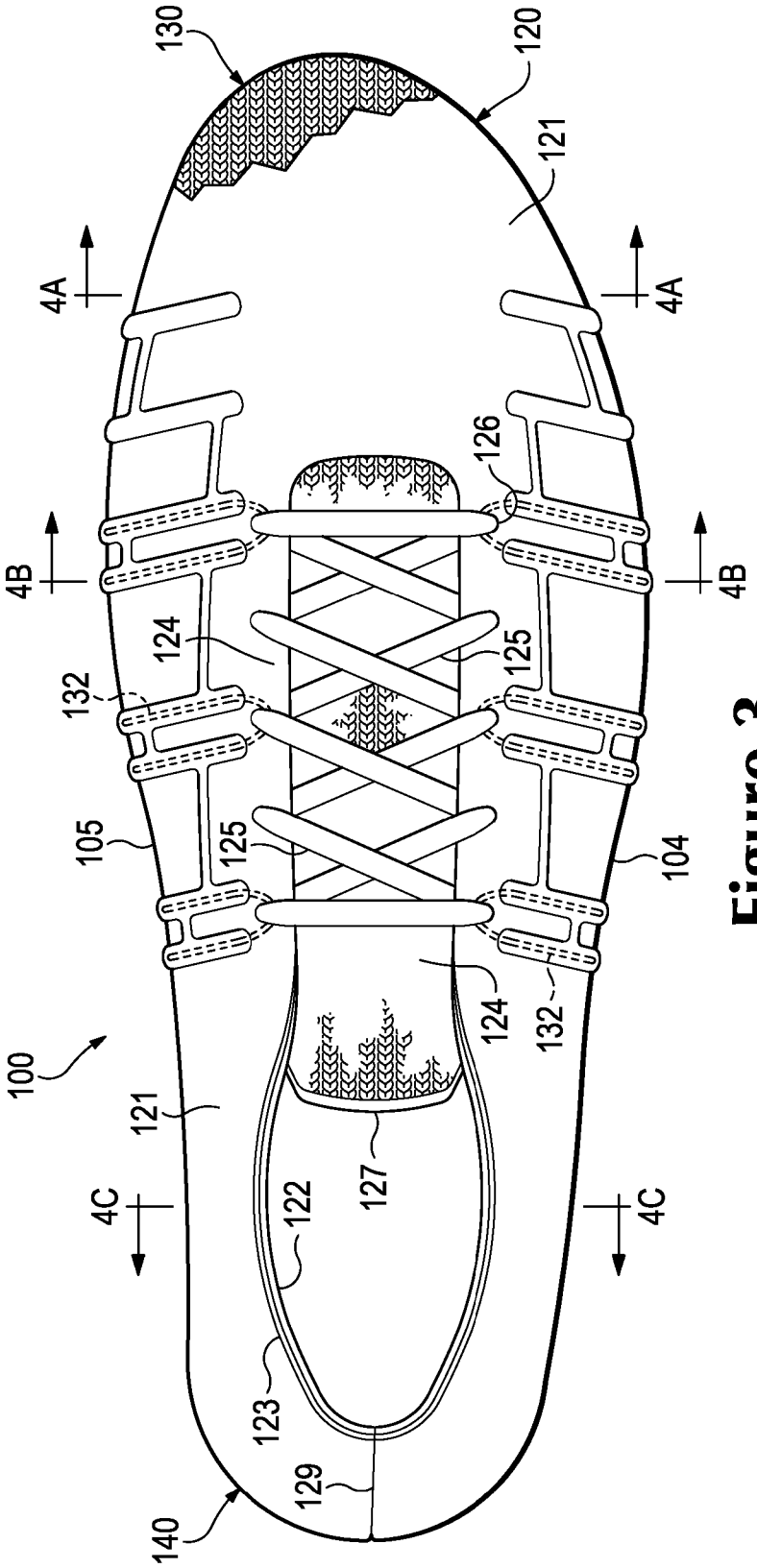

Figure 3

lululemon Ex. 1007
IPR Petition - USP 9,375,046

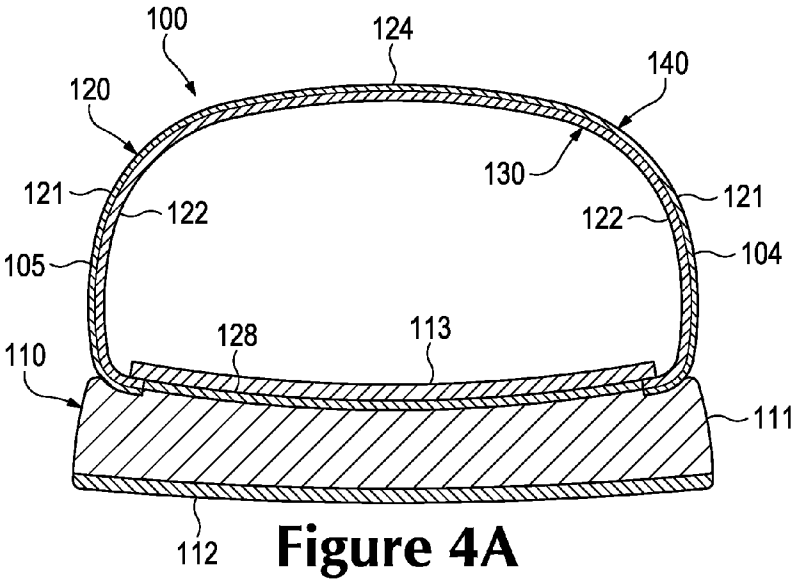

Figure 4A

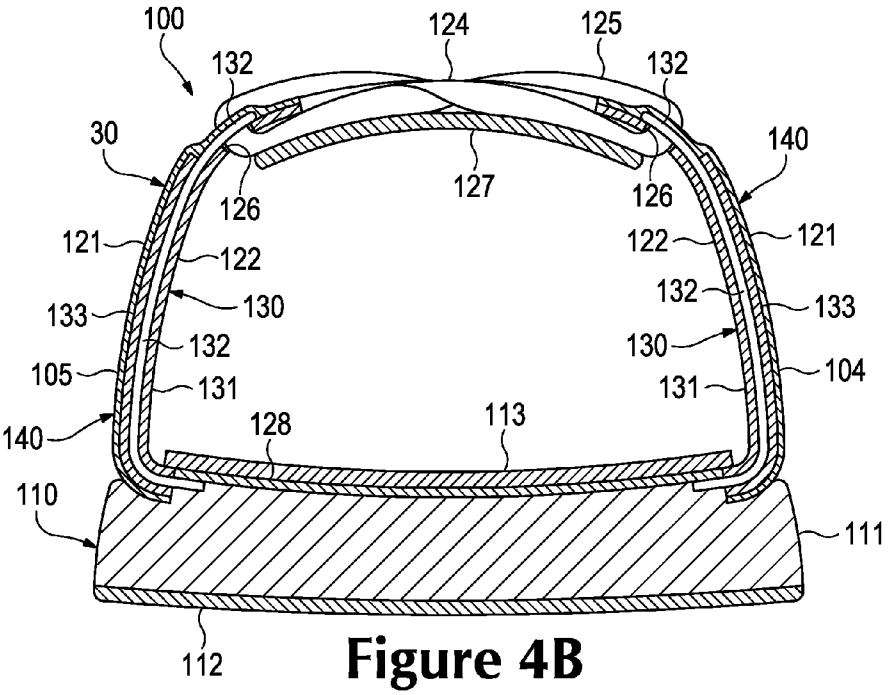

Figure 4B

lululemon Ex. 1007
IPR Petition - USP 9,375,046

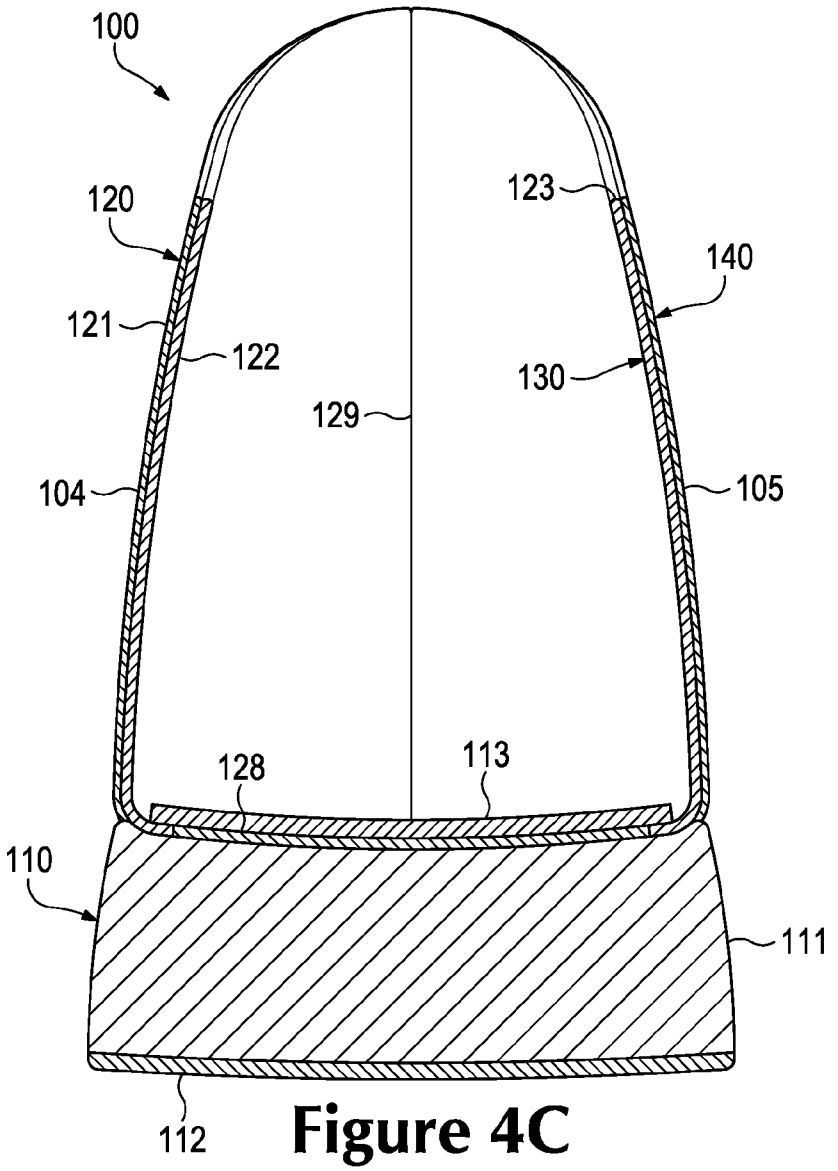

Figure 4C

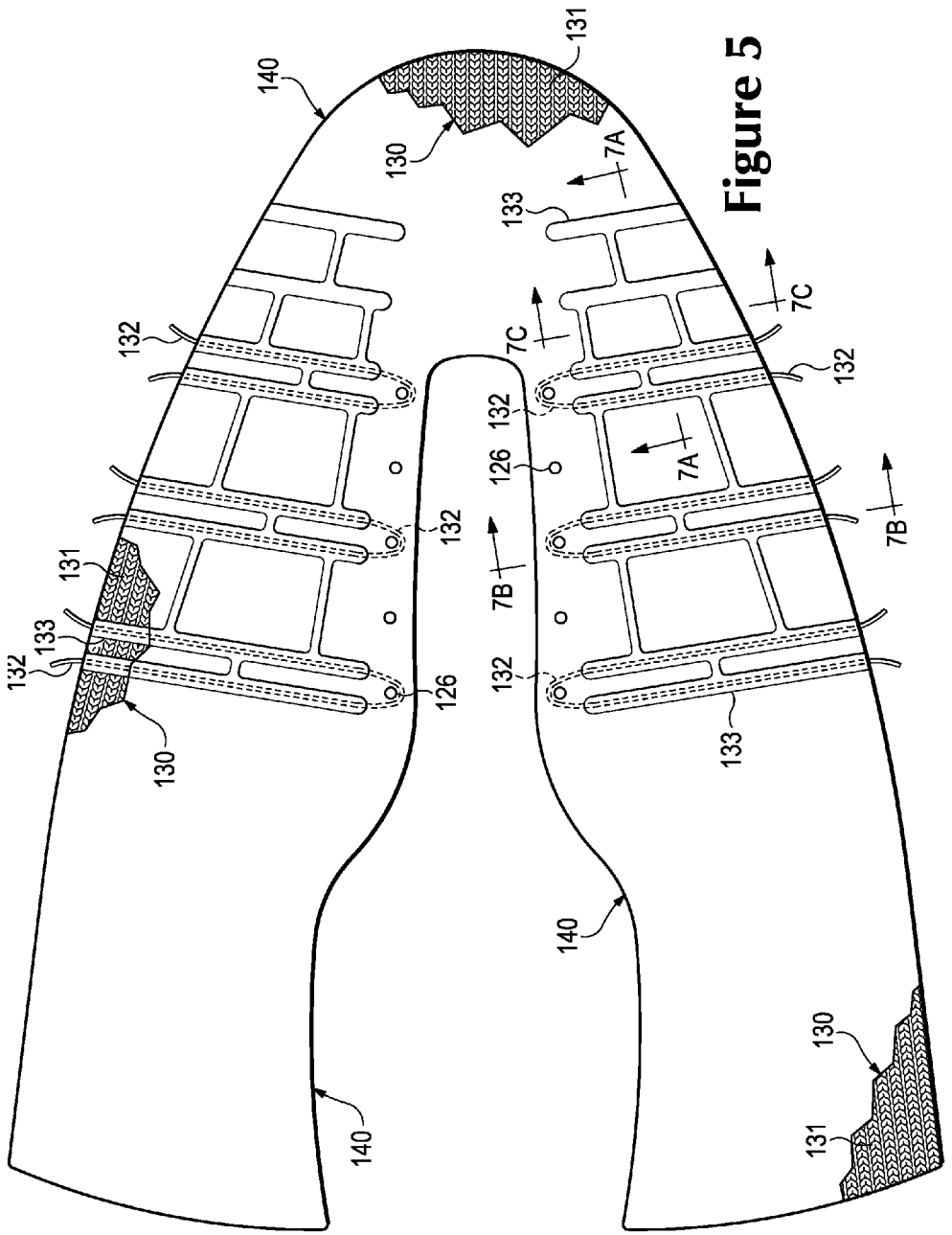

Figure 5

lululemon Ex. 1007
IPR Petition - USP 9,375,046

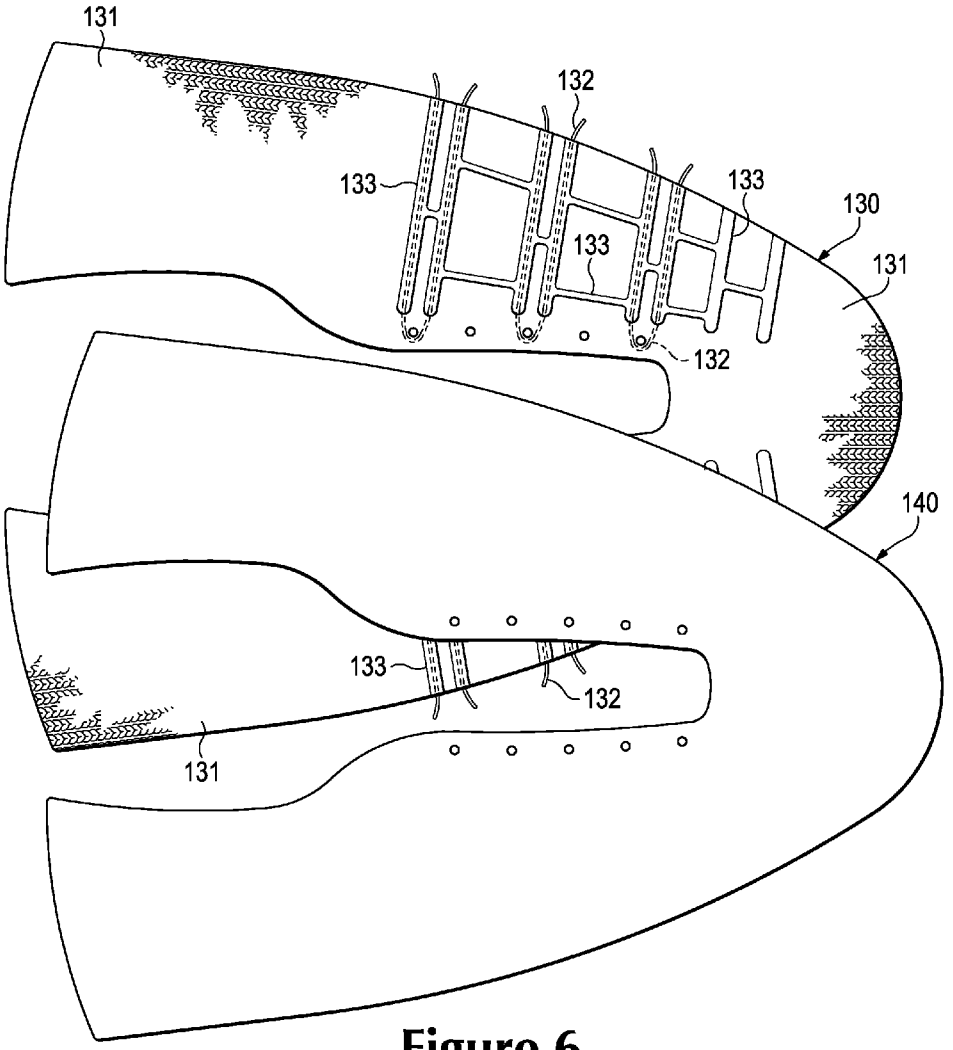

Figure 6

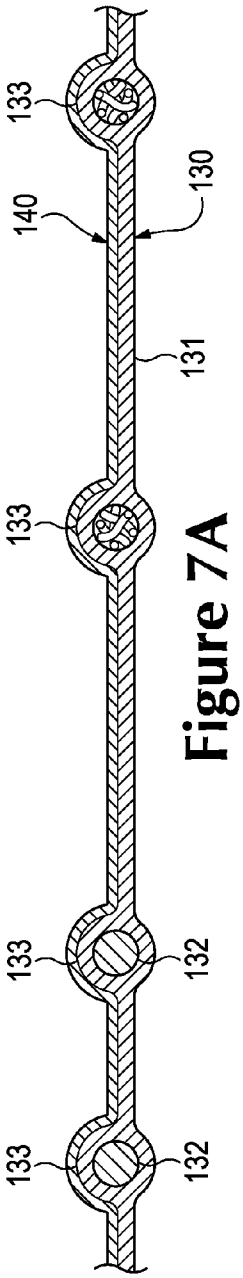

Figure 7A

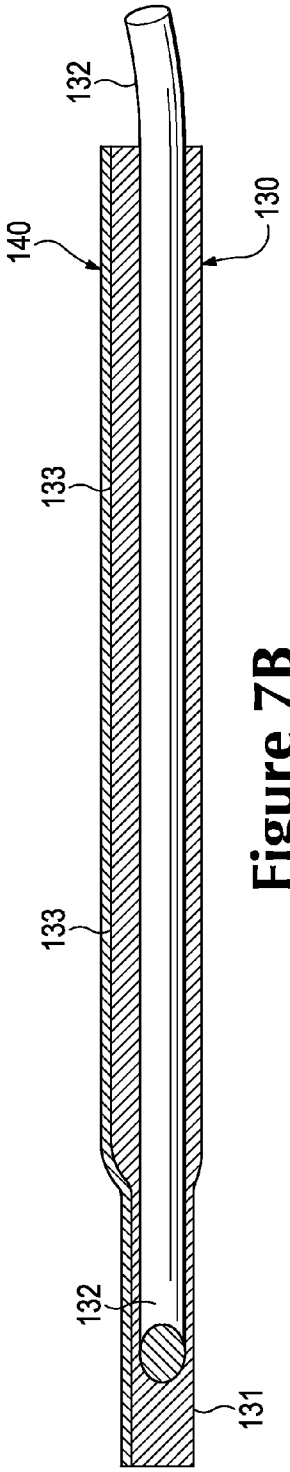

Figure 7B

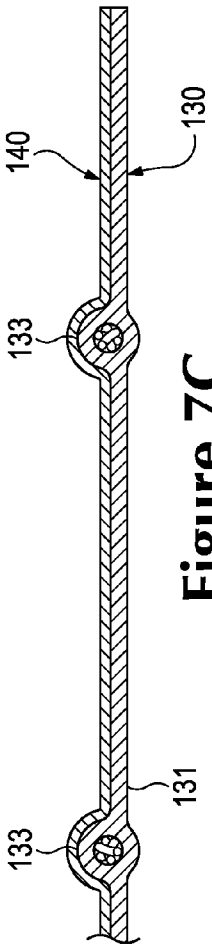

Figure 7C

lululemon Ex. 1007
IPR Petition - USP 9,375,046

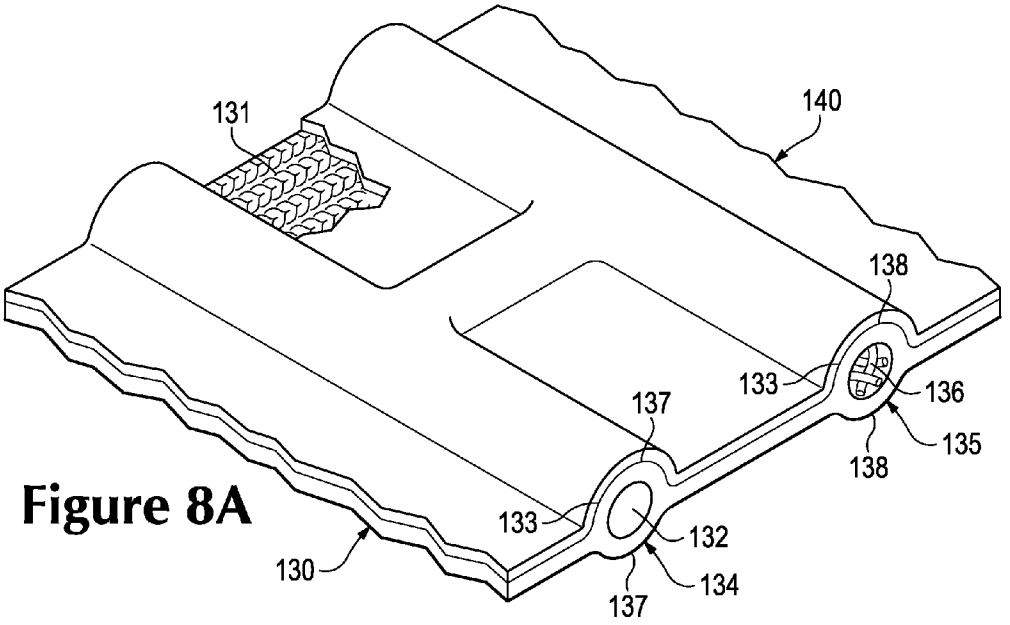

Figure 8A

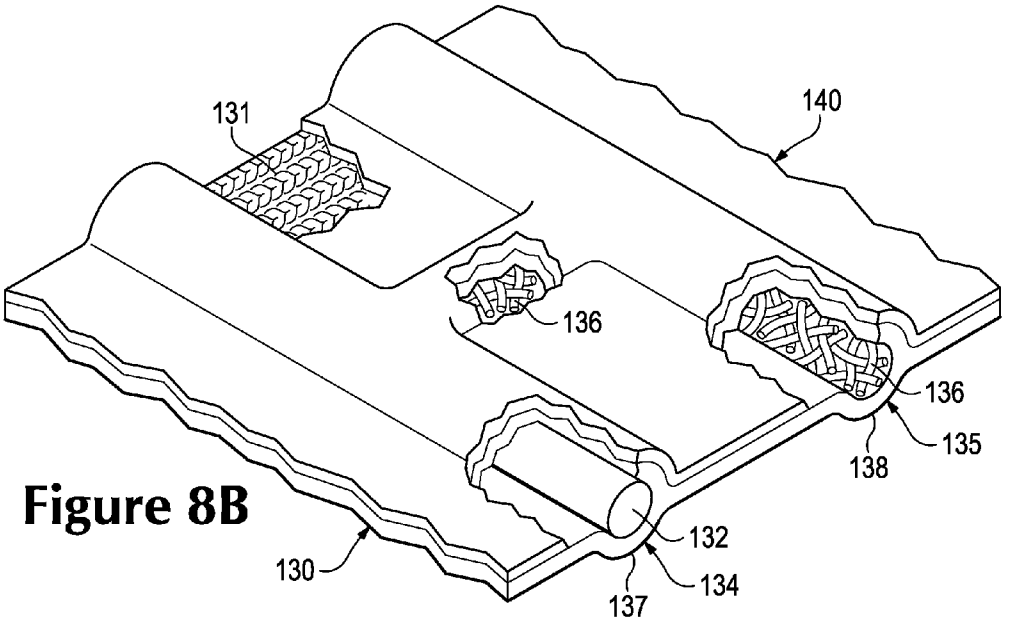

Figure 8B

lululemon Ex. 1007
IPR Petition - USP 9,375,046

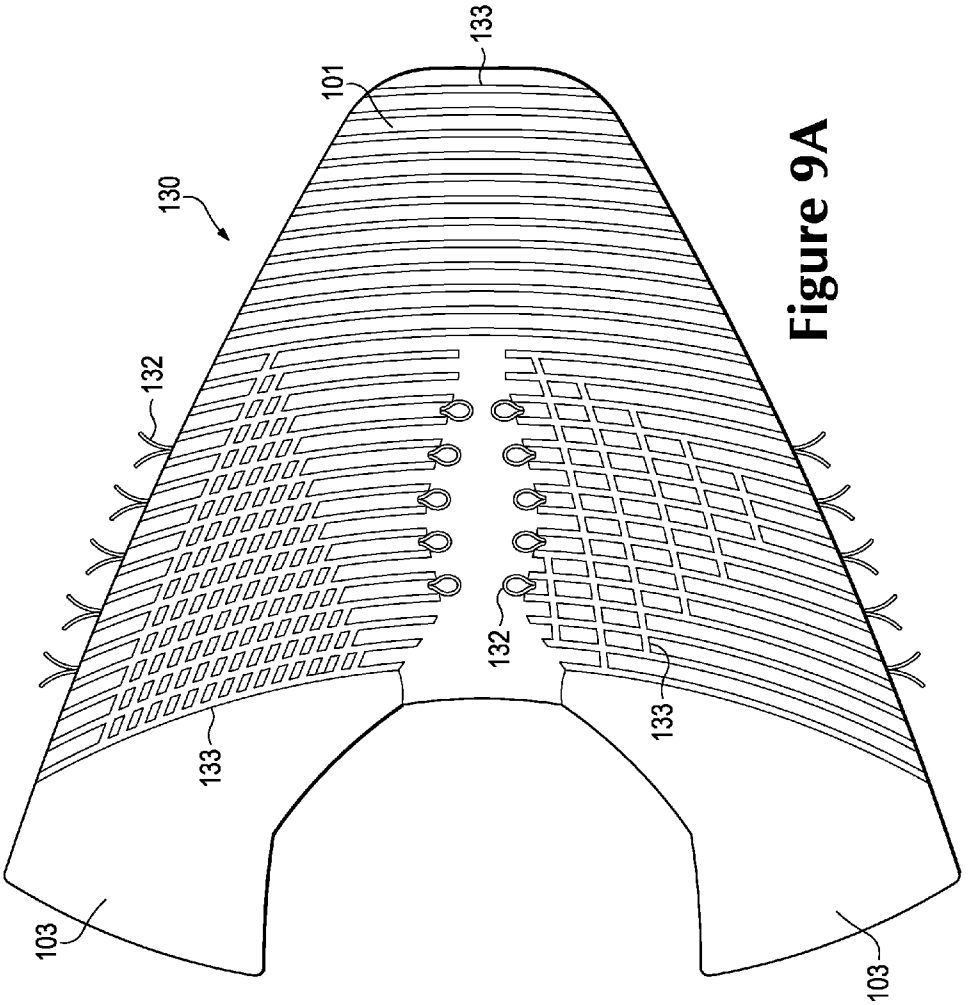

Figure 9A

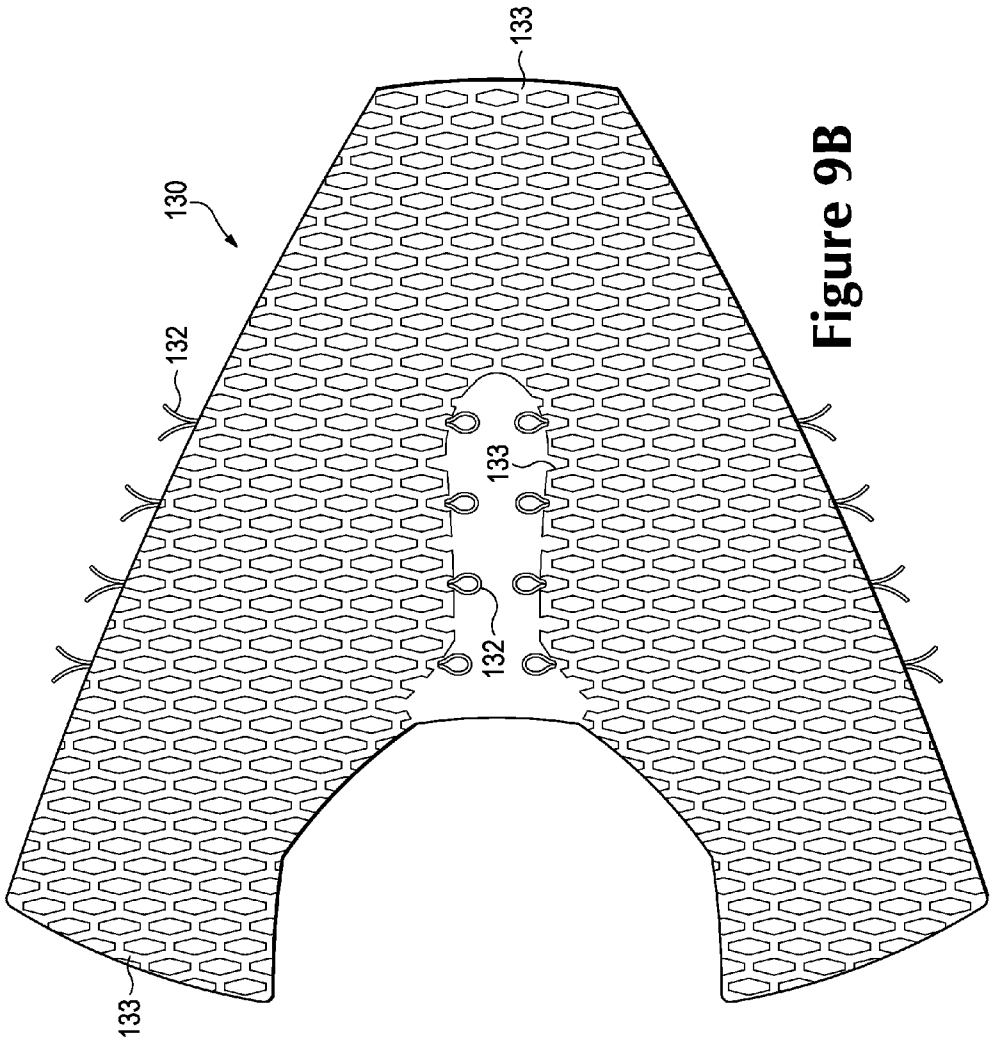

Figure 9B

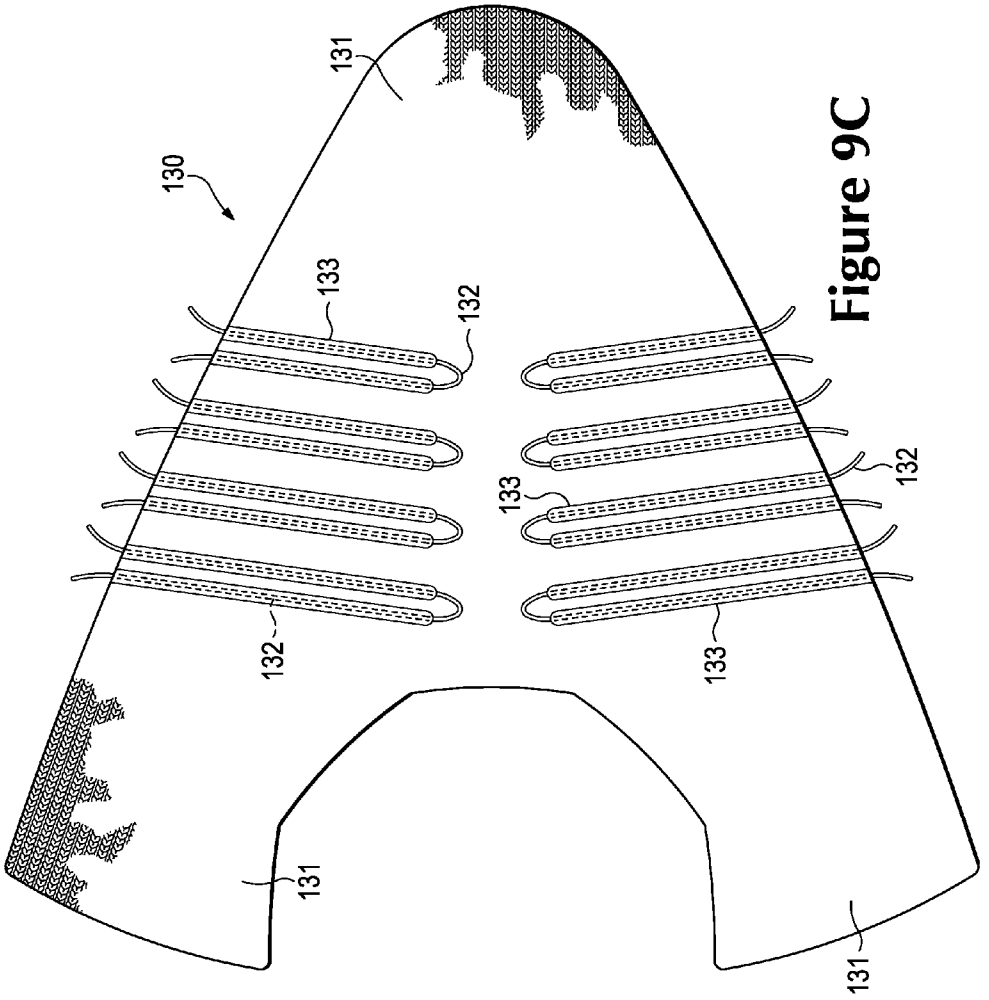

Figure 9C

lululemon Ex. 1007
IPR Petition - USP 9,375,046

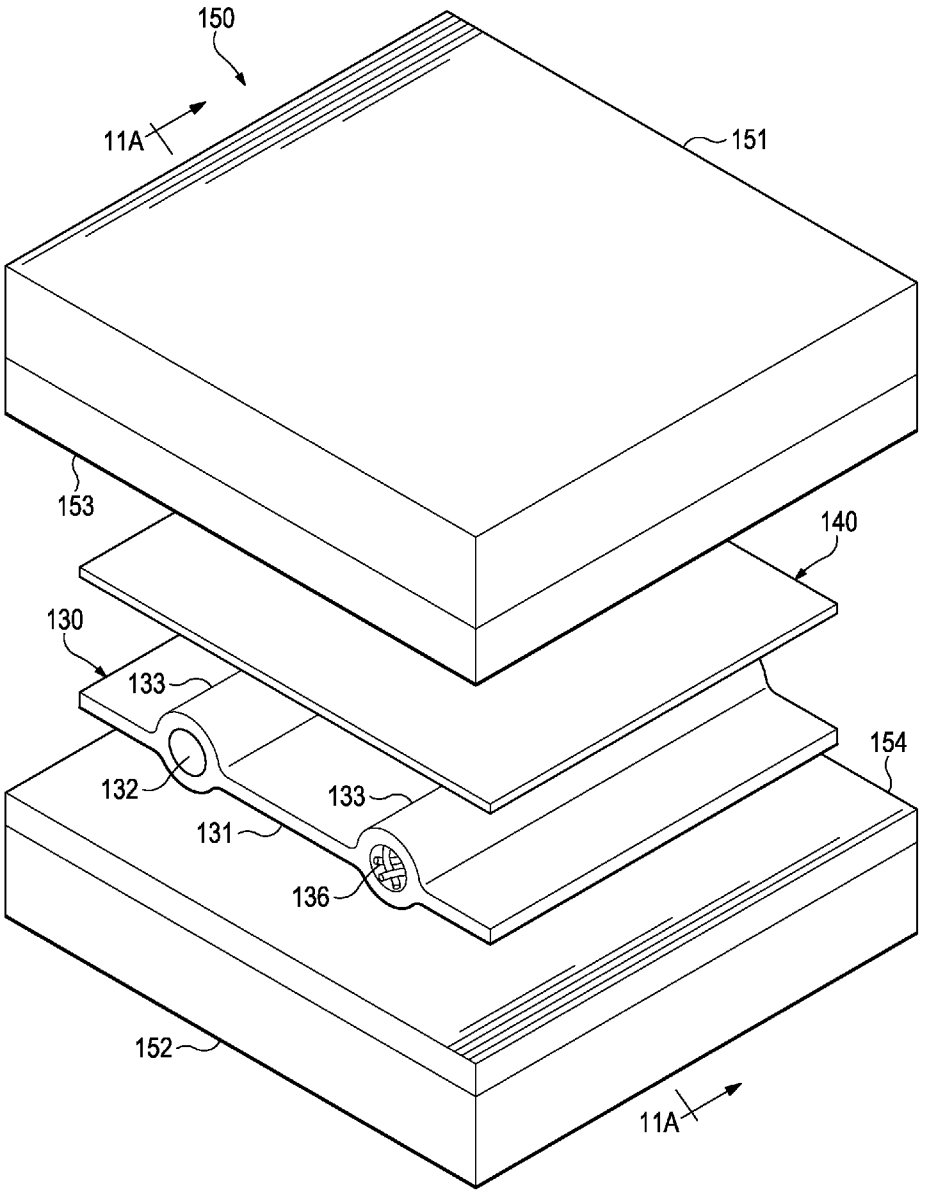

Figure 10A

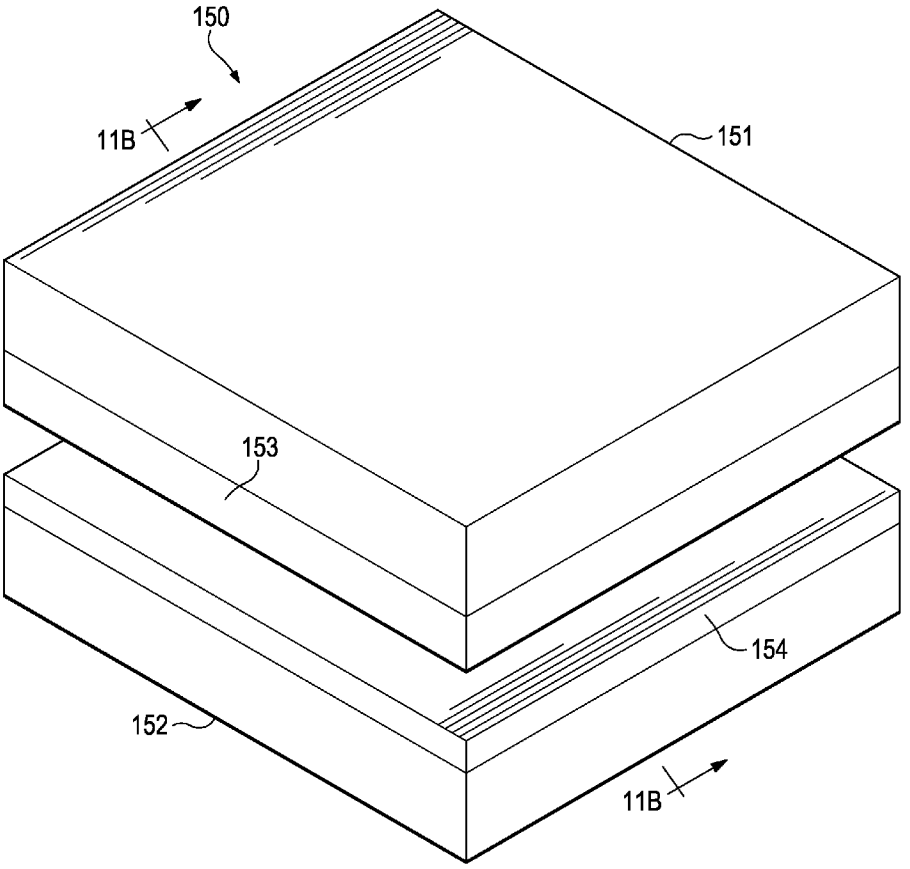

Figure 10B

lululemon Ex. 1007
IPR Petition - USP 9,375,046

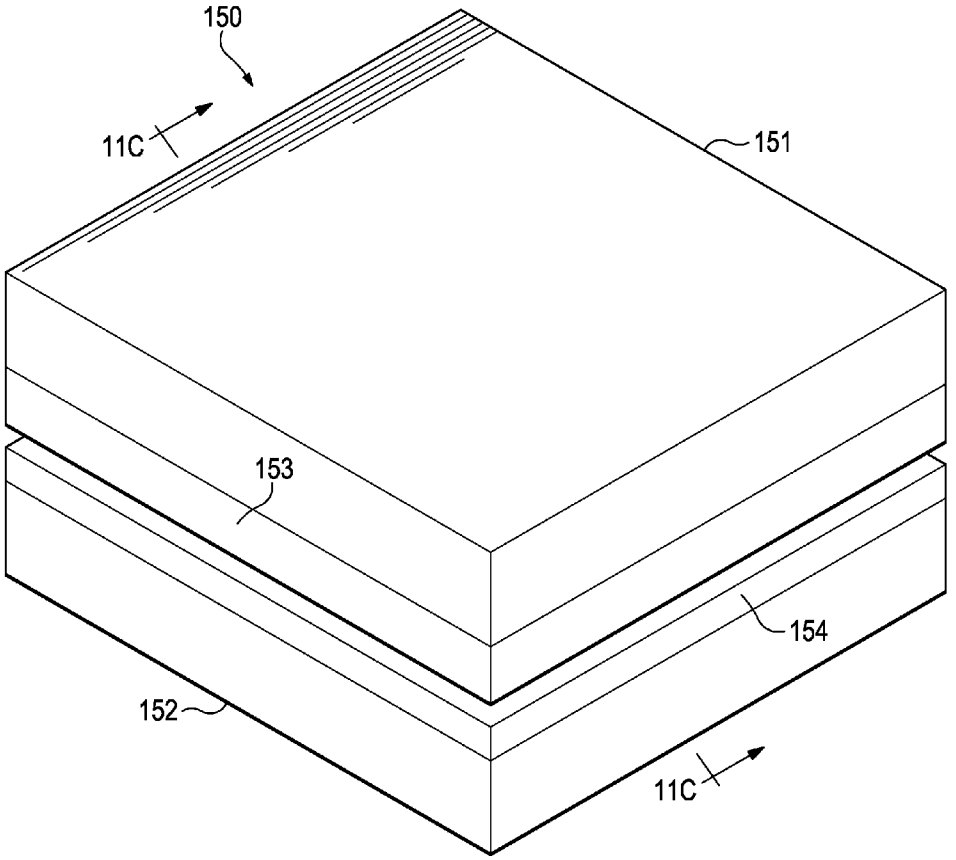

Figure 10C

lululemon Ex. 1007
IPR Petition - USP 9,375,046

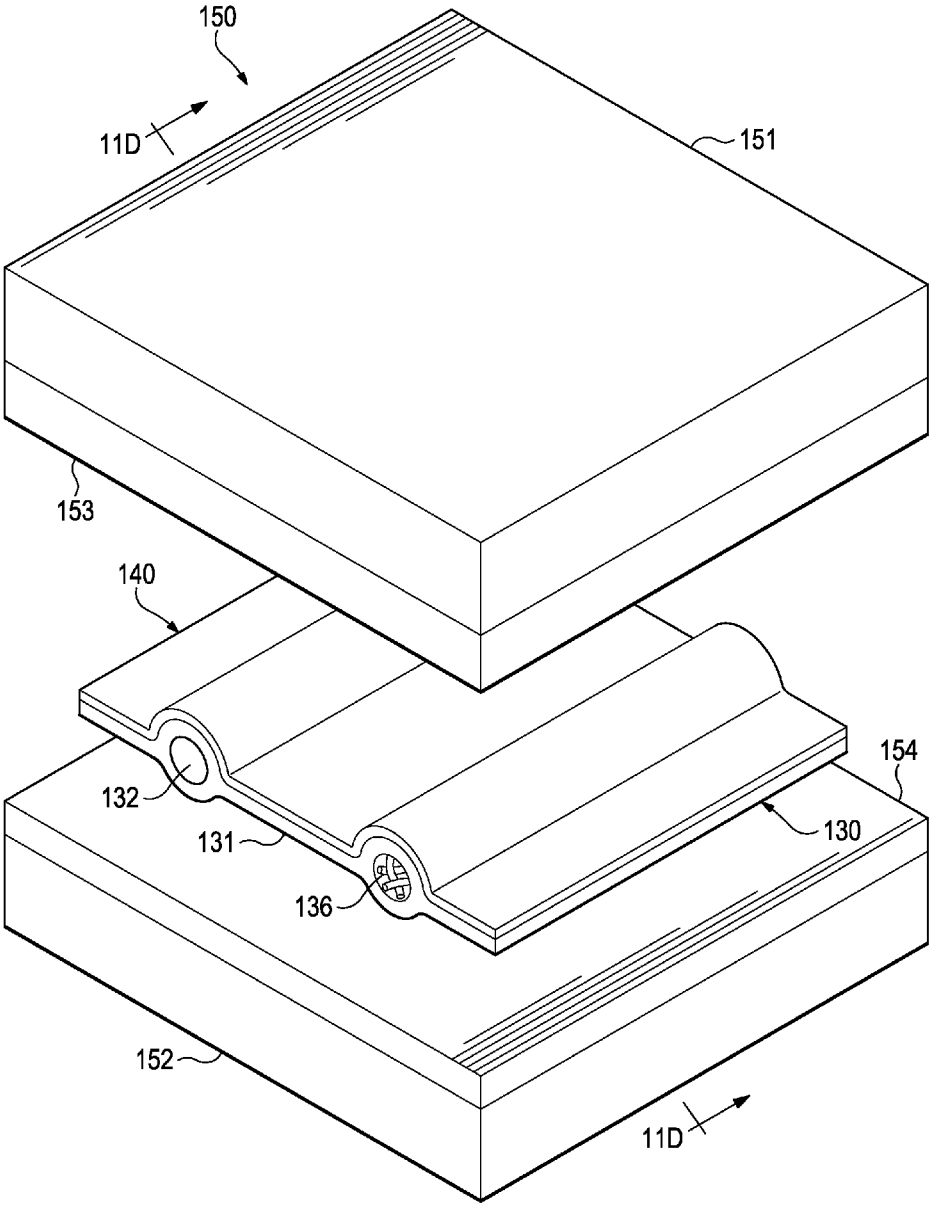

Figure 10D

lululemon Ex. 1007
IPR Petition - USP 9,375,046

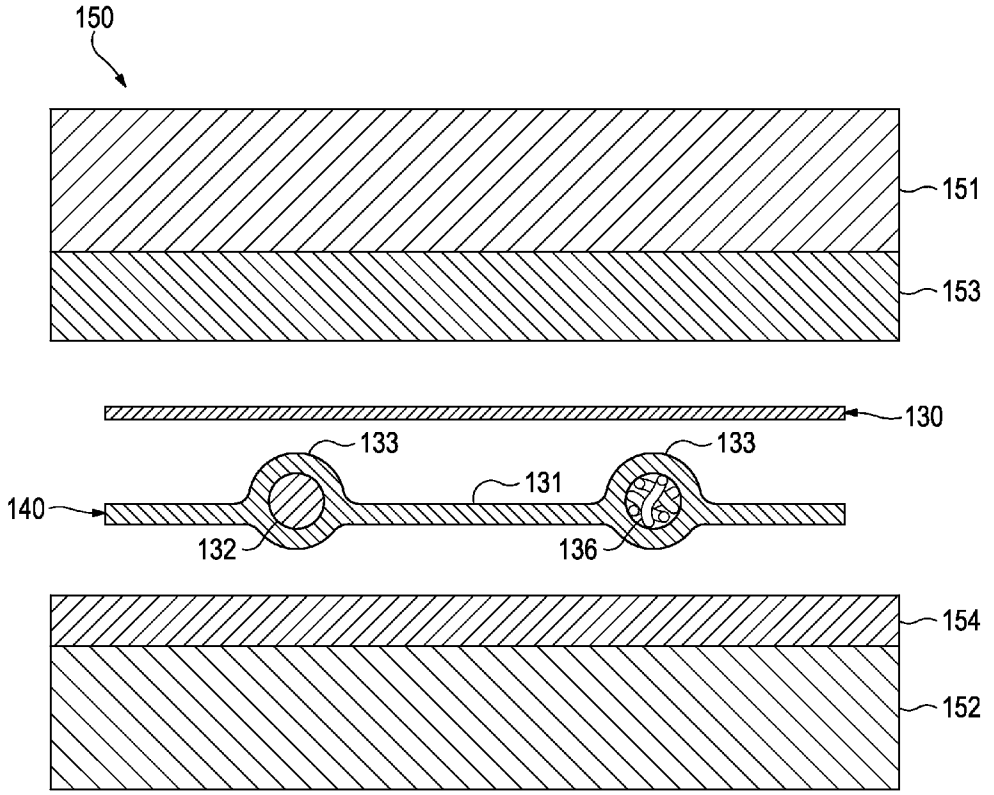

Figure 11A

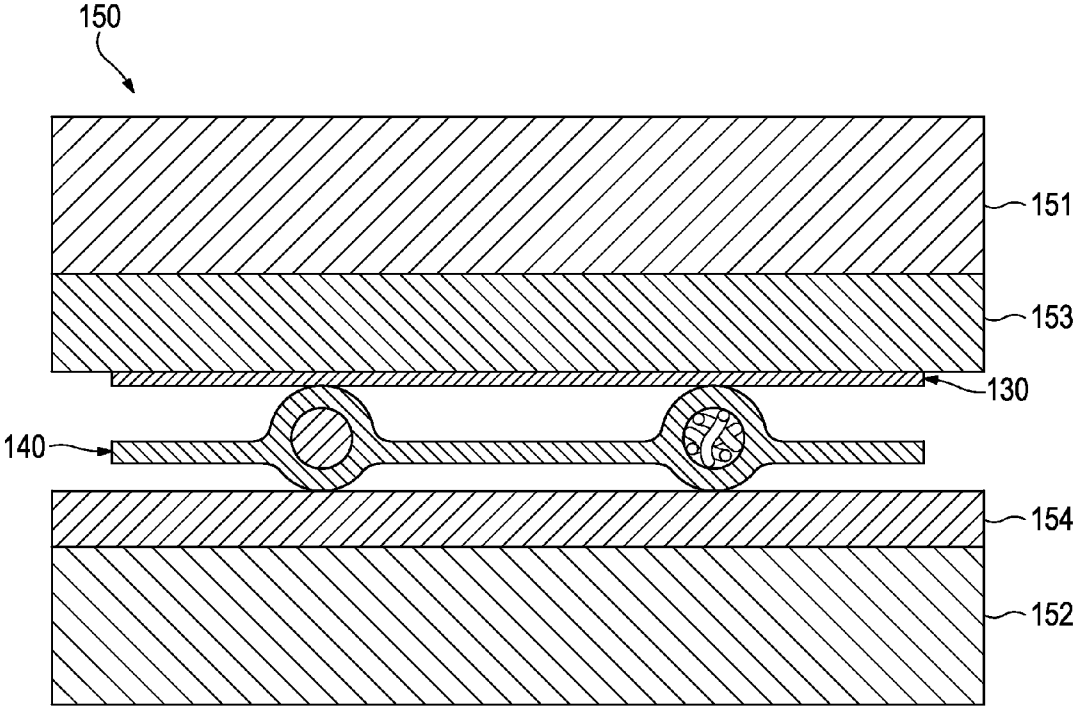

Figure 11B

lululemon Ex. 1007
IPR Petition - USP 9,375,046

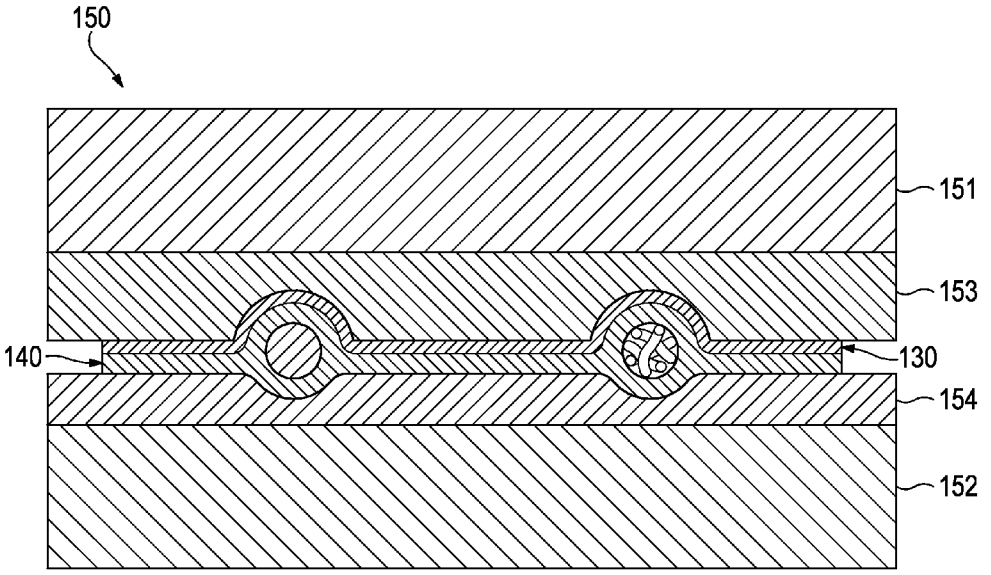

Figure 11C

lululemon Ex. 1007
IPR Petition - USP 9,375,046

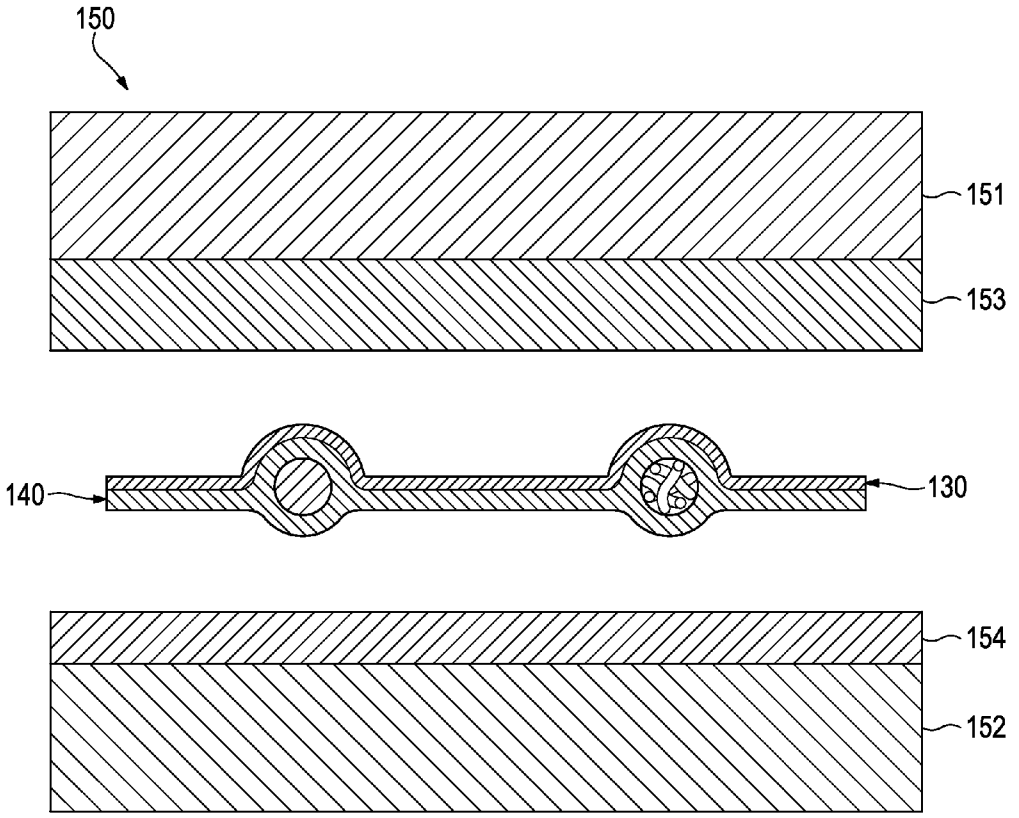

Figure 11D

lululemon Ex. 1007
IPR Petition - USP 9,375,046

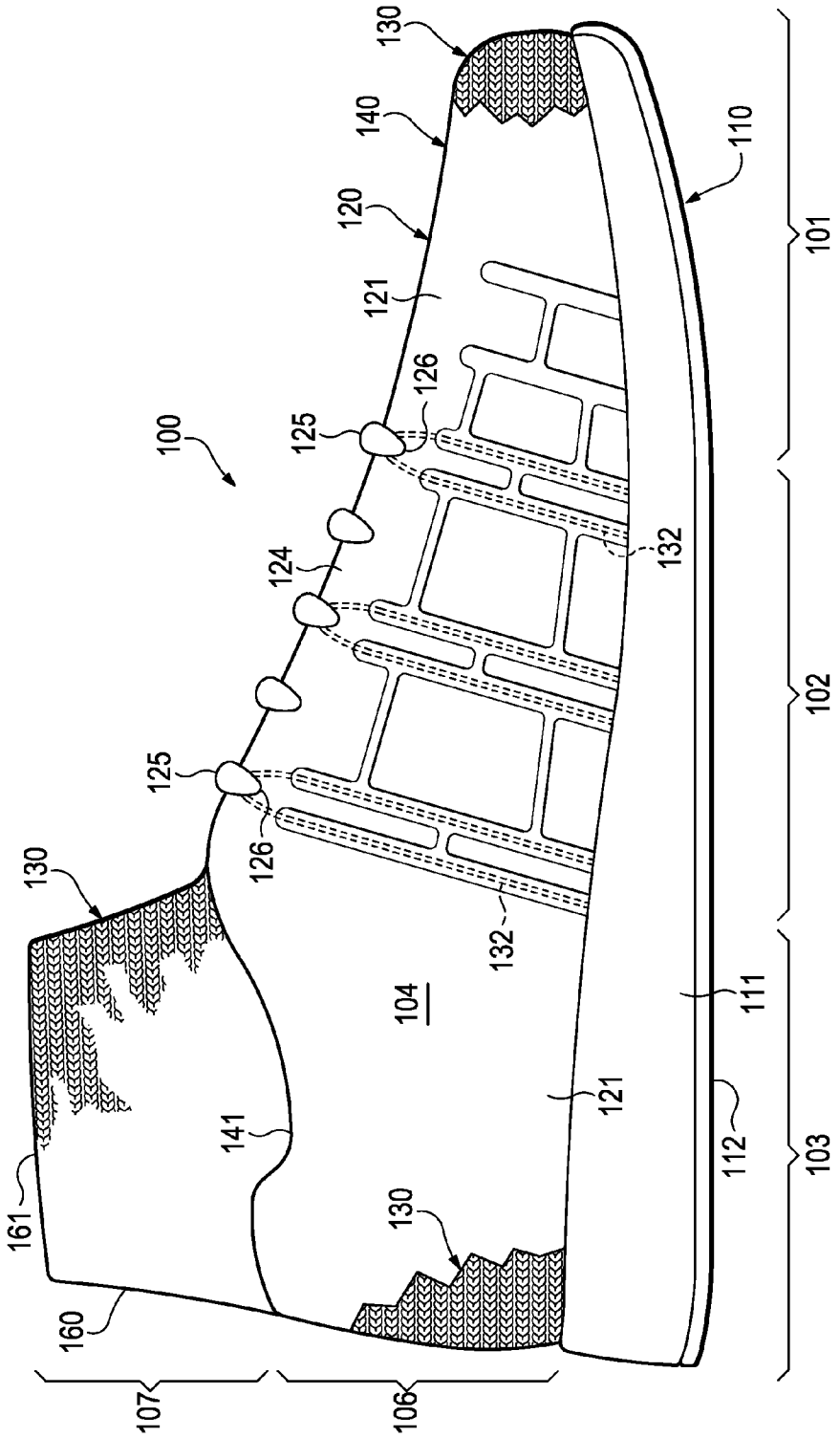

Figure 12

lululemon Ex. 1007
IPR Petition - USP 9,375,046

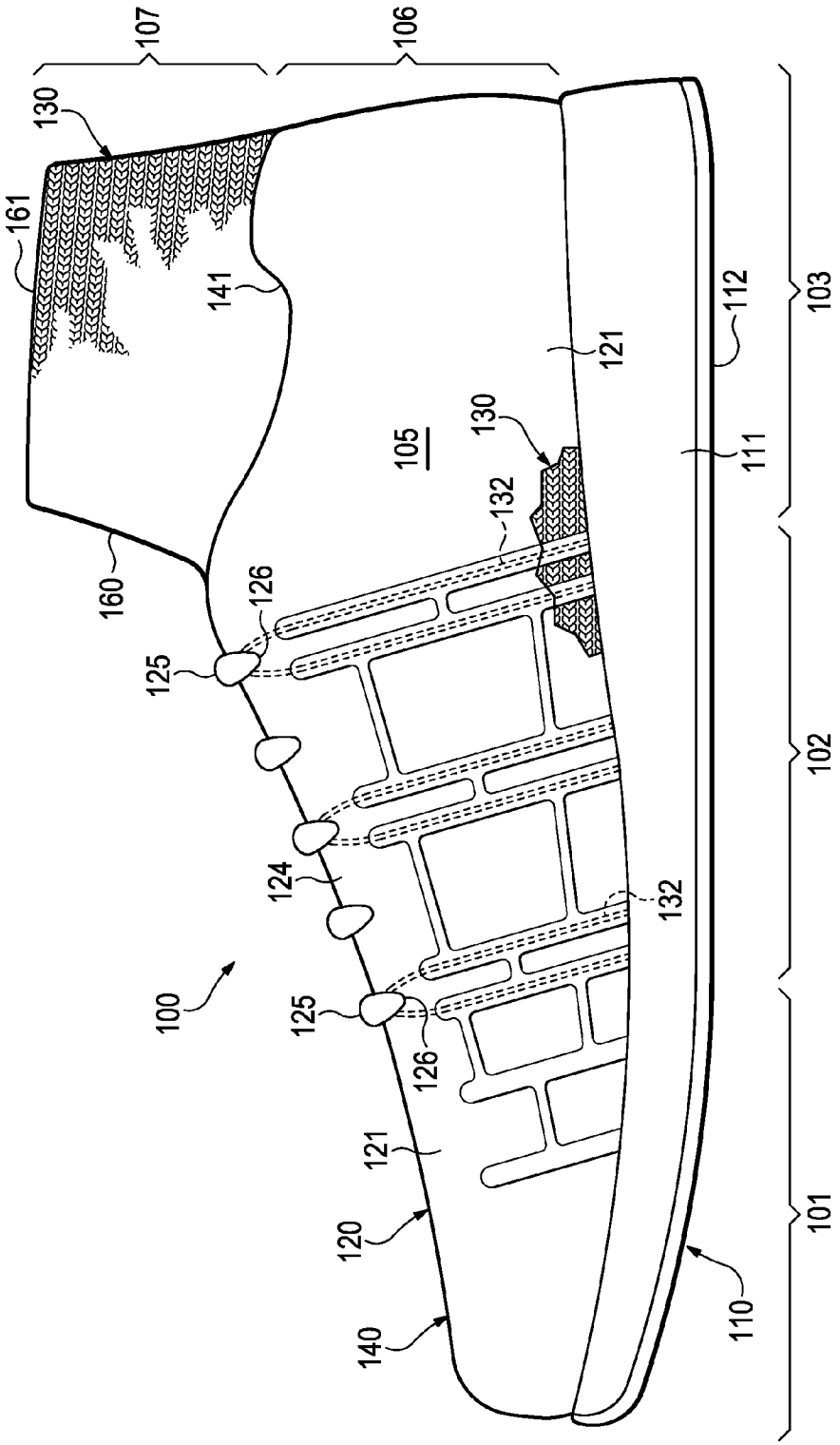

Figure 13

lululemon Ex. 1007
IPR Petition - USP 9,375,046

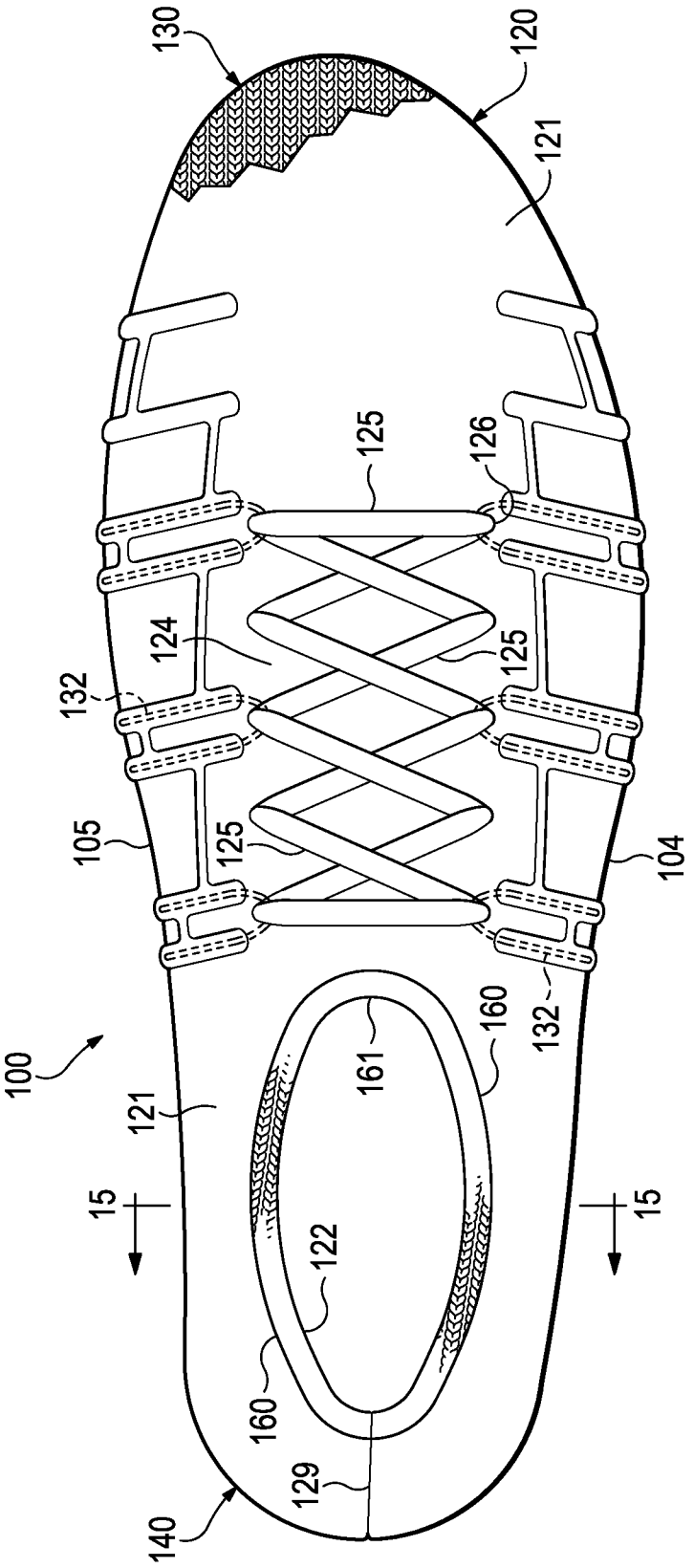

Figure 14

lululemon Ex. 1007
IPR Petition - USP 9,375,046

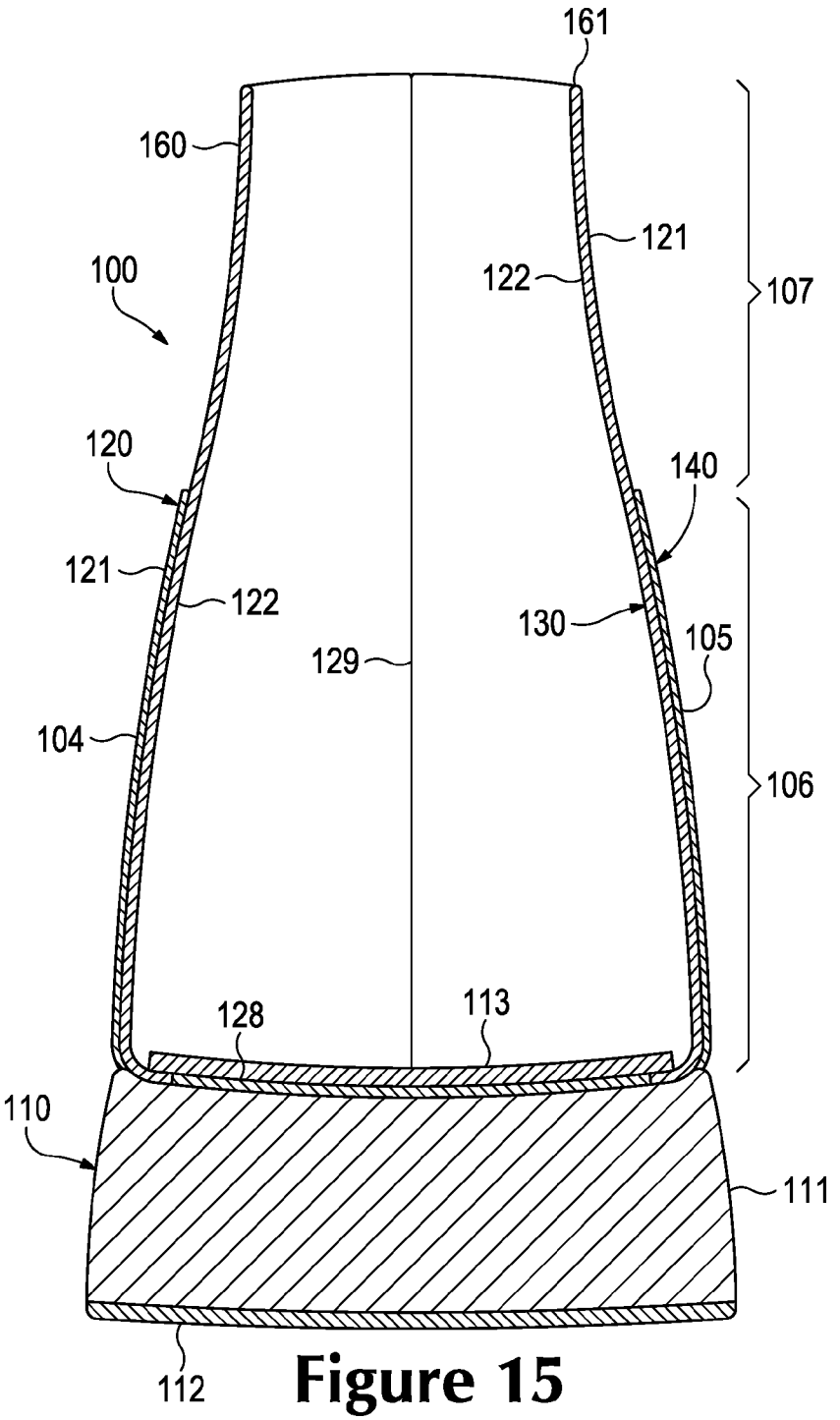
161
160
121
100
122
107
120
140
121
122
130
105
129
104
106
128
113
110
111
112

Figure 15

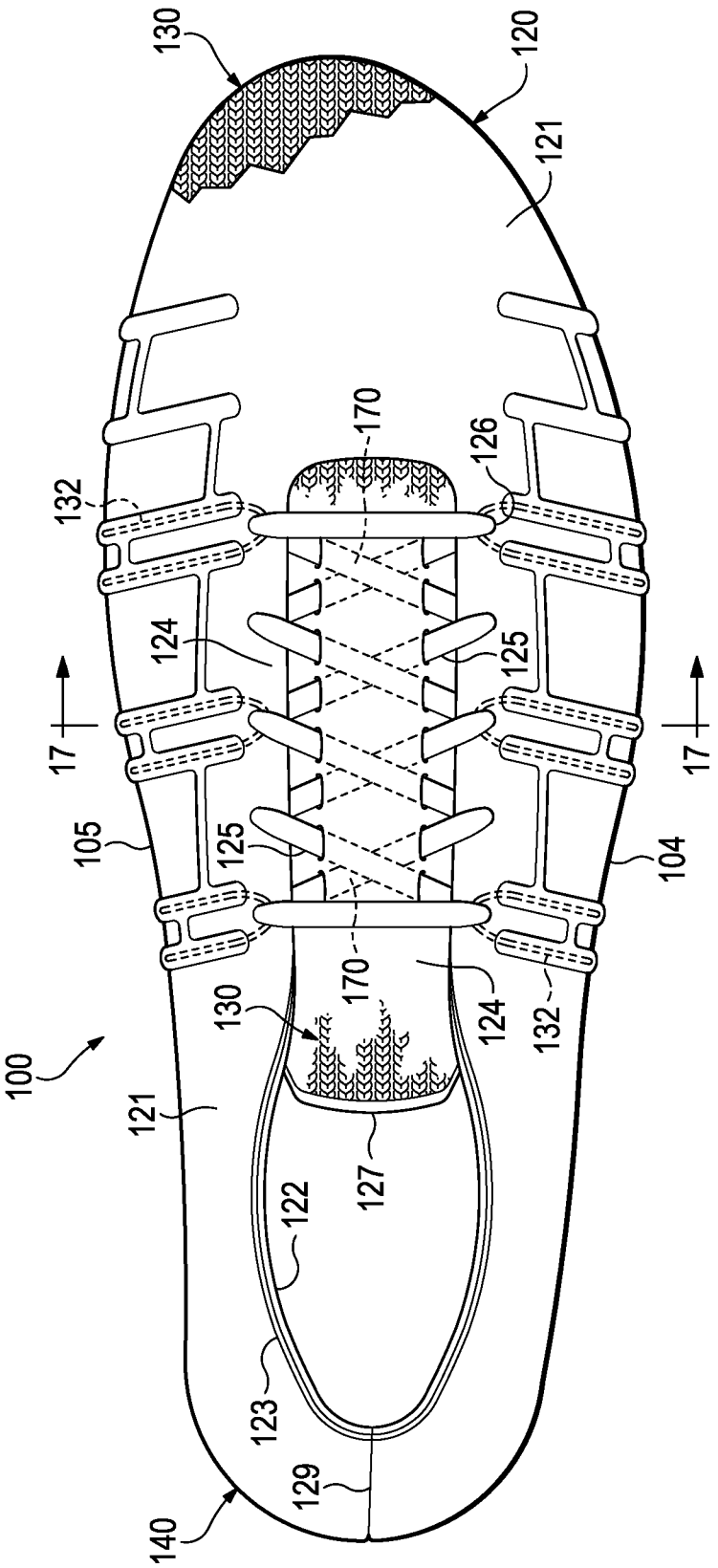

Figure 16

lululemon Ex. 1007
IPR Petition - USP 9,375,046

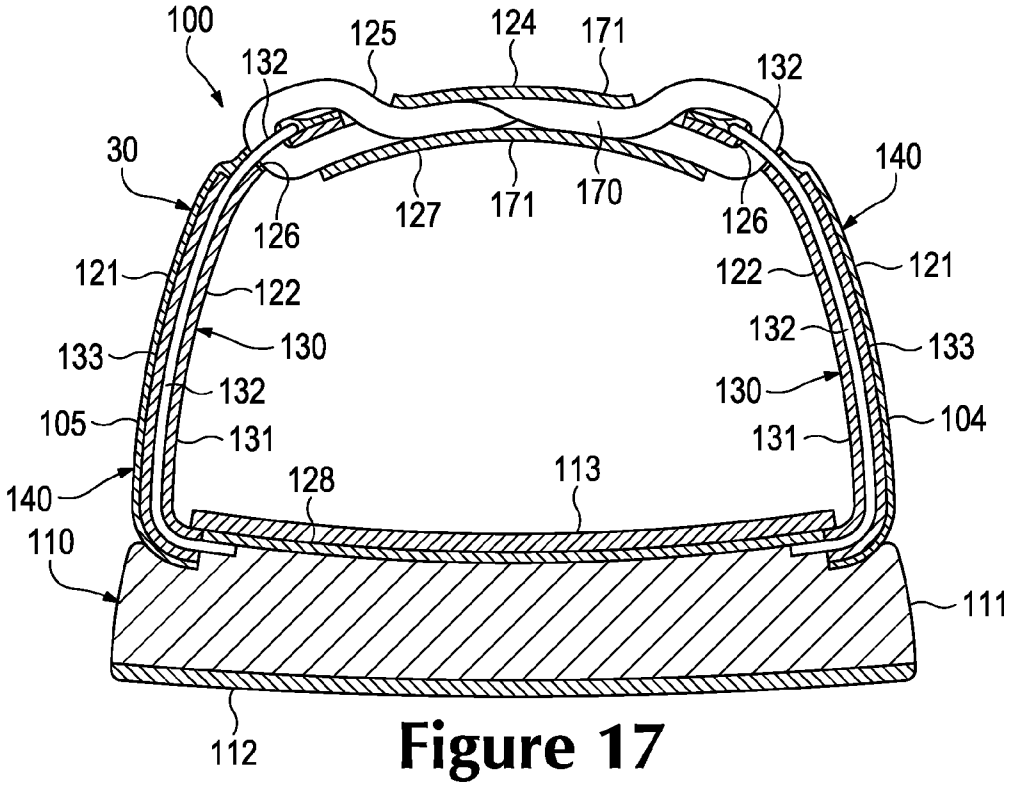

Figure 17

lululemon Ex. 1007
IPR Petition - USP 9,375,046

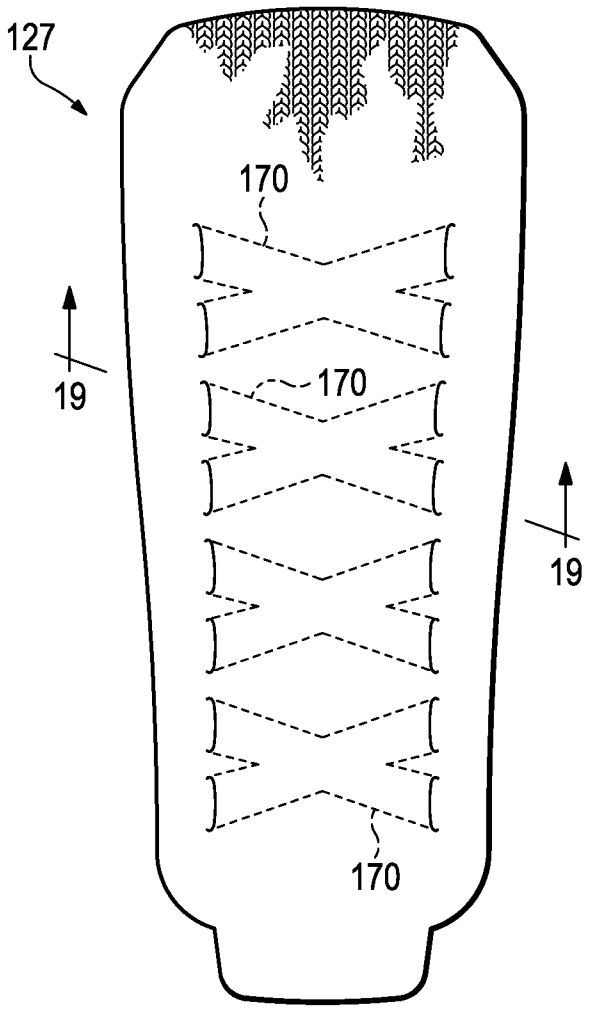

Figure 18

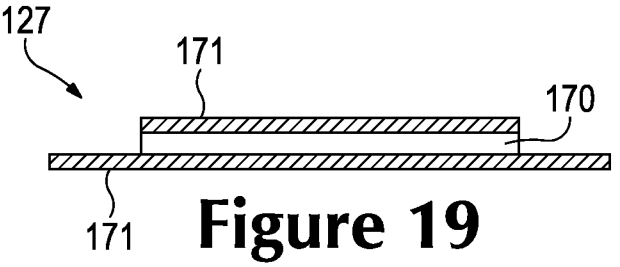

Figure 19

lululemon Ex. 1007
IPR Petition - USP 9,375,046

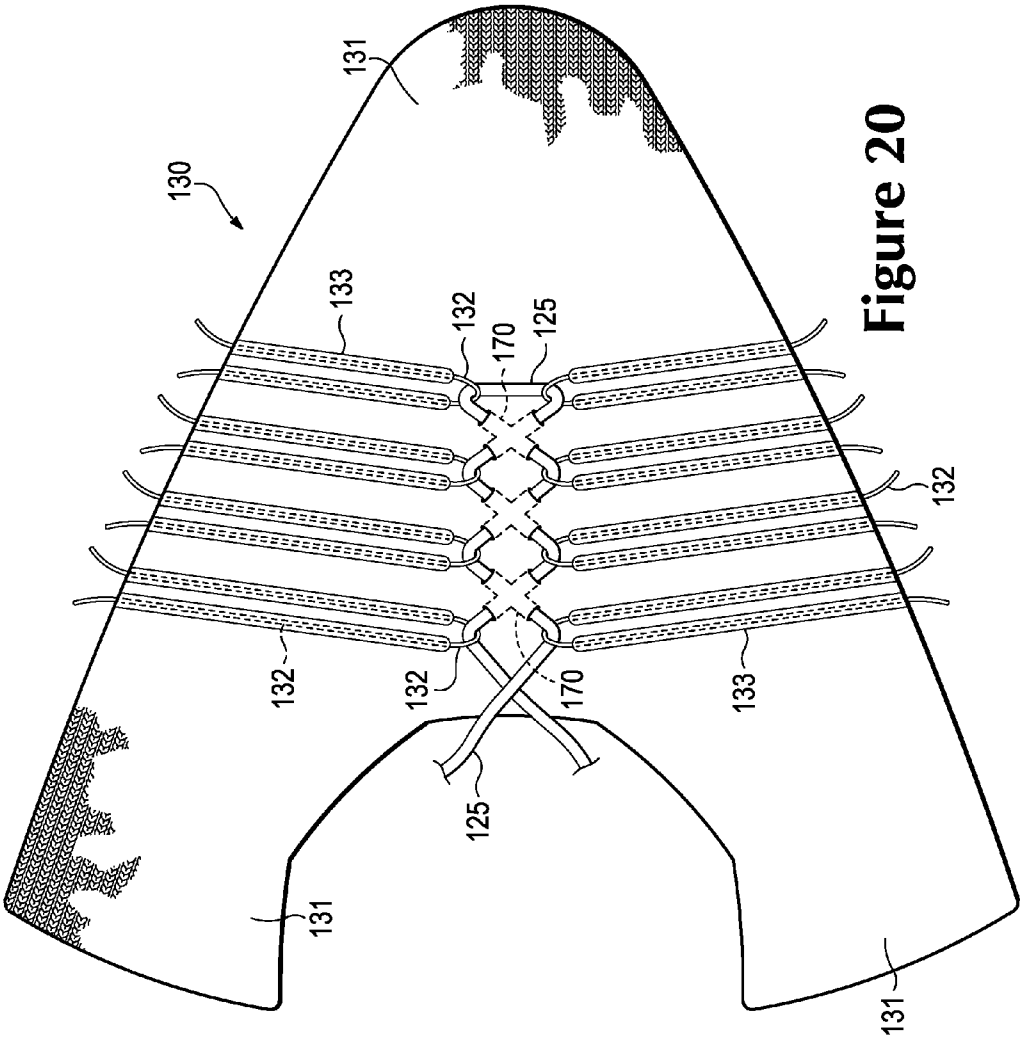

Figure 20

lululemon Ex. 1007
IPR Petition - USP 9,375,046

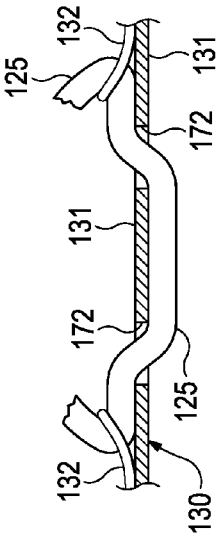

Figure 22

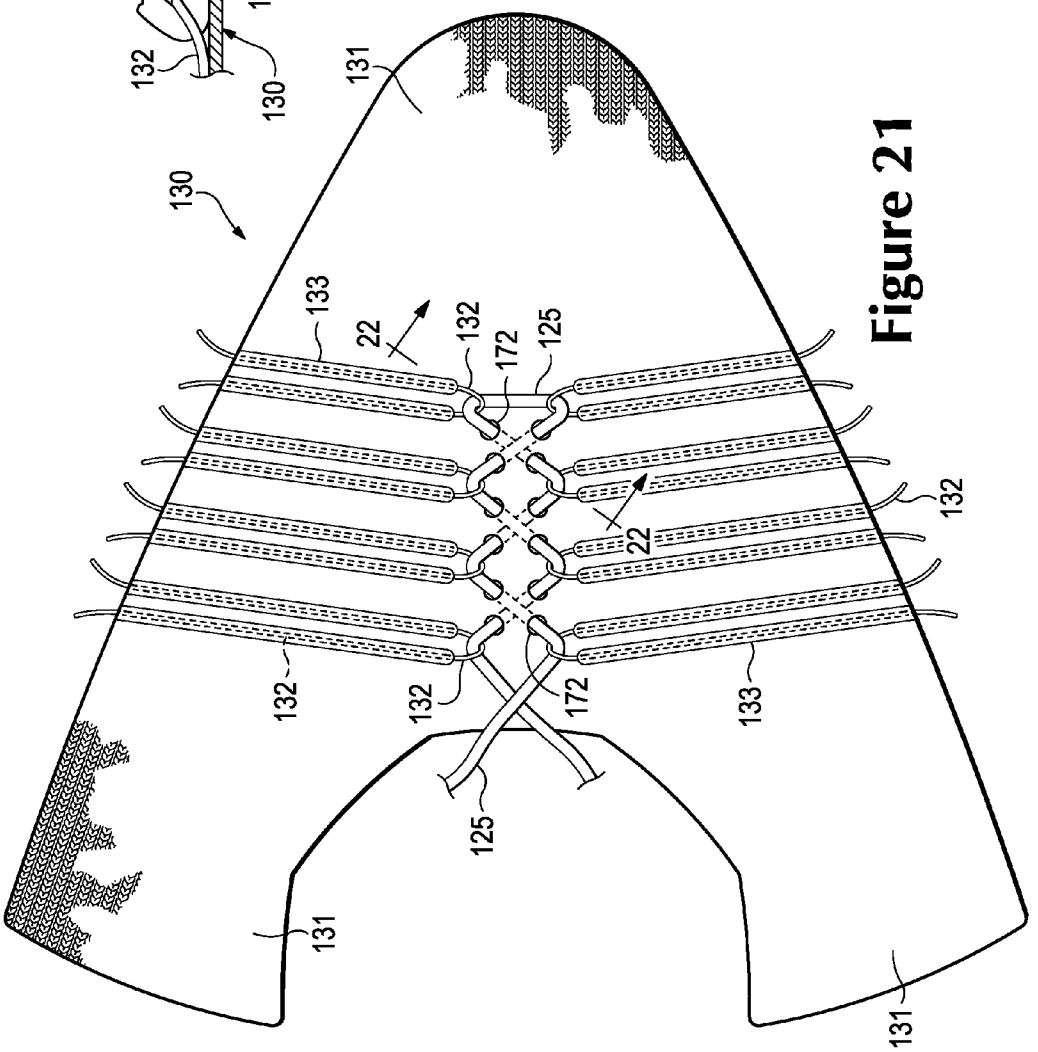

Figure 21

lululemon Ex. 1007
IPR Petition - USP 9,375,046

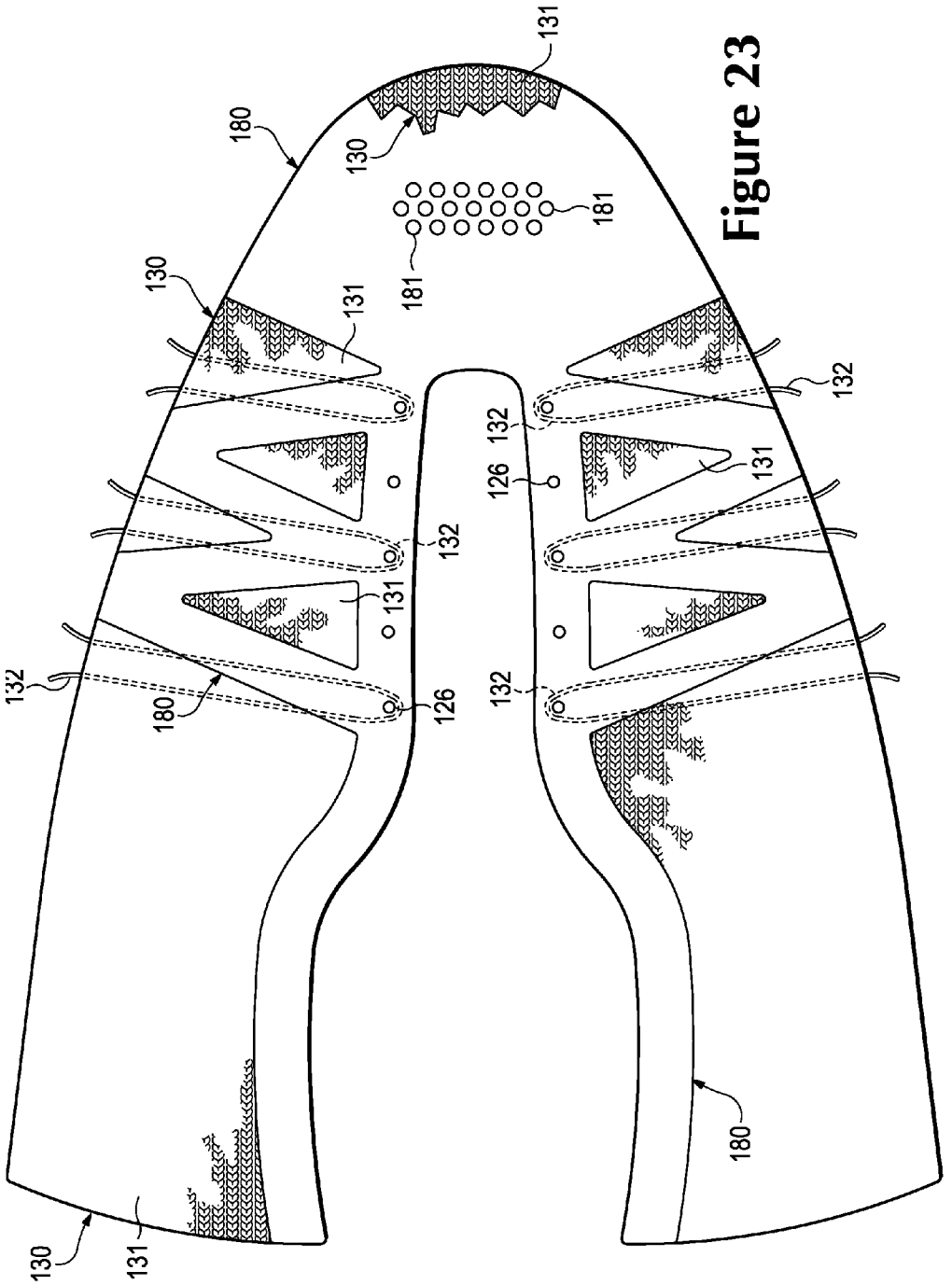

Figure 23

lululemon Ex. 1007
IPR Petition - USP 9,375,046

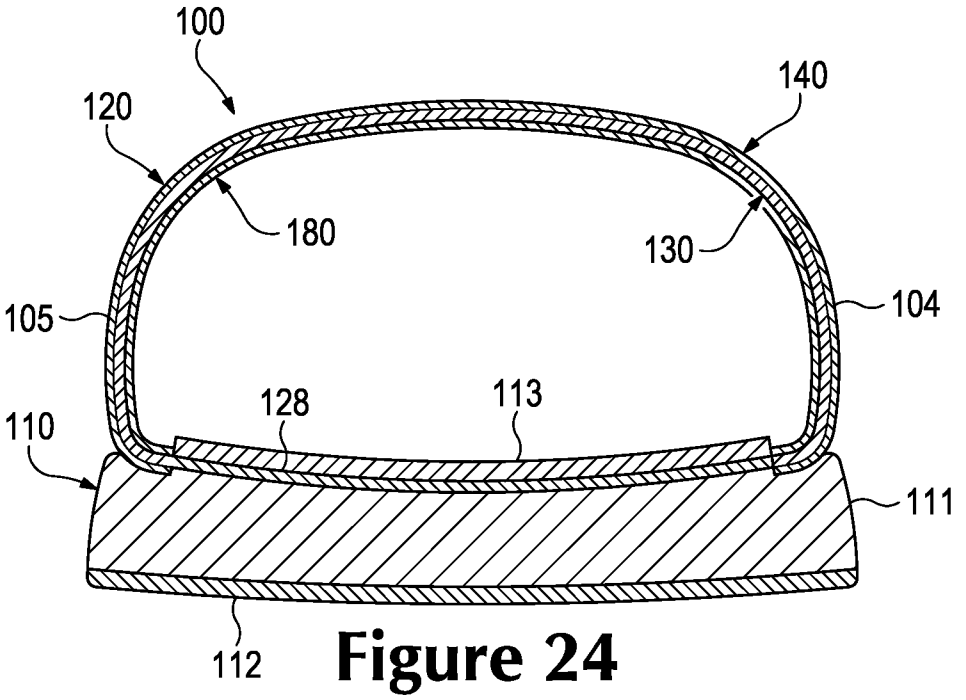

Figure 24

lululemon Ex. 1007
IPR Petition - USP 9,375,046

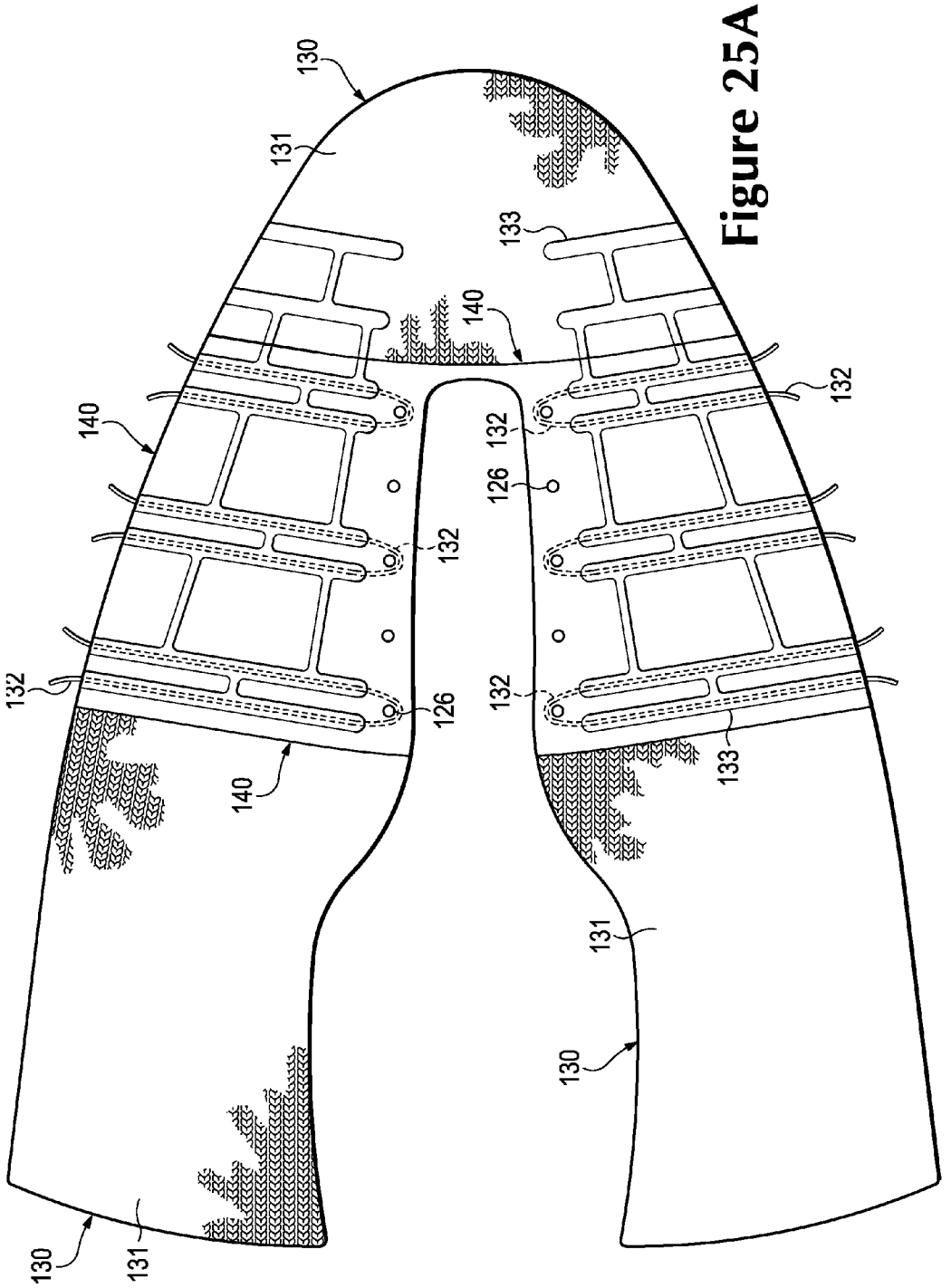

Figure 25A

lululemon Ex. 1007
IPR Petition - USP 9,375,046

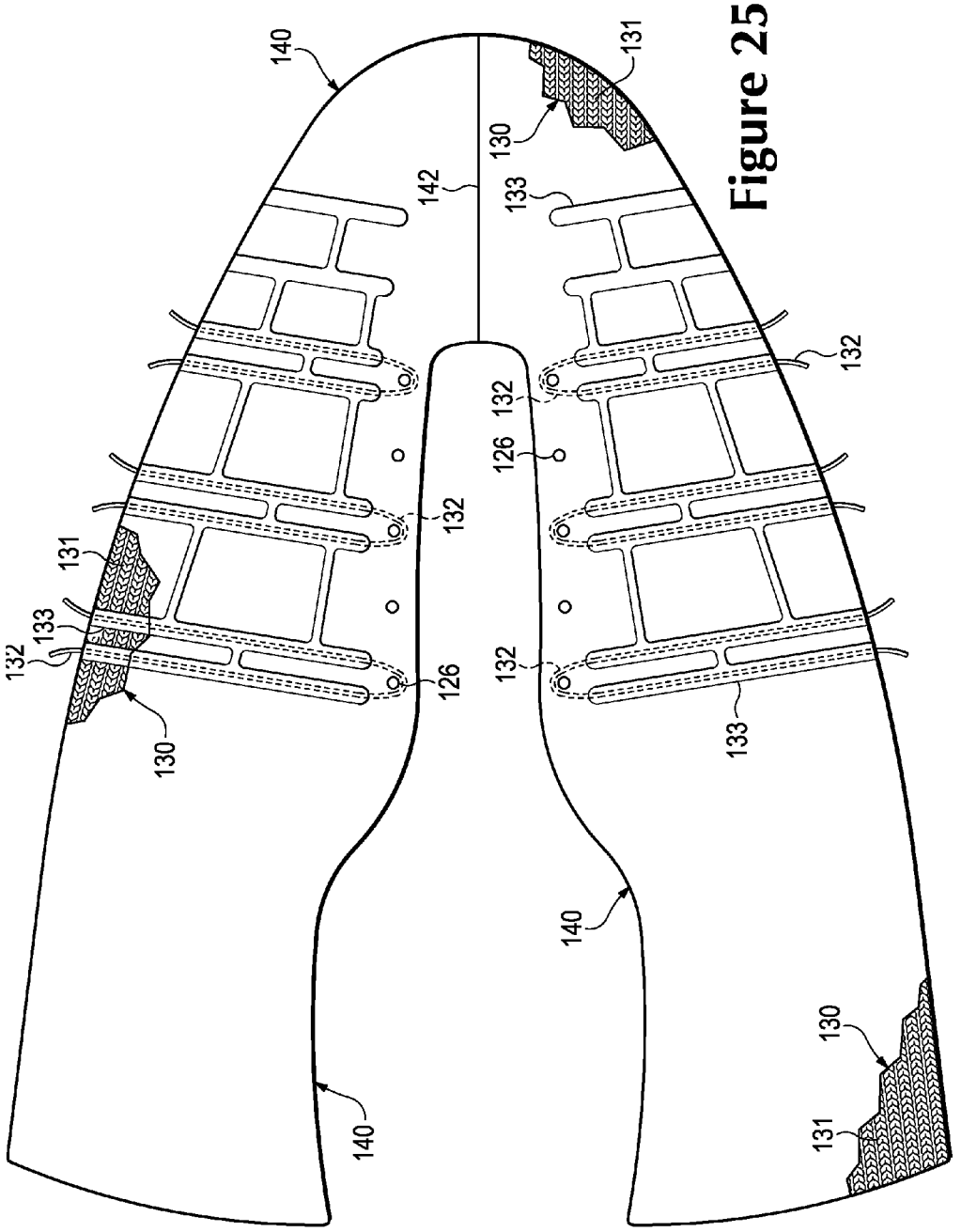

Figure 25B

lululemon Ex. 1007
IPR Petition - USP 9,375,046

ARTICLE OF FOOTWEAR INCORPORATING A KNITTED COMPONENT

CROSS-REFERENCE TO RELATED APPLICATION

[0001] This non-provisional patent application is a continuation of and claims priority to U.S. Provisional Patent Application Ser. No. 61/727,010 (Attorney Docket No. 51-2906), which was filed in the U.S. Patent and Trademark Office on 15 Nov. 2012 and entitled Article Of Footwear Incorporating A Knitted Component, the disclosure of which is entirely incorporated herein by reference.

BACKGROUND

[0002] Conventional articles of footwear generally include two primary elements, an upper and a sole structure. The upper is secured to the sole structure and forms a void on the interior of the footwear for comfortably and securely receiving a foot. The sole structure is secured to a lower surface of the upper so as to be positioned between the upper and the ground. In some articles of athletic footwear, for example, the sole structure may include a midsole and an outsole. The midsole may be formed from a polymer foam material that attenuates ground reaction forces to lessen stresses upon the foot and leg during walking, running, and other ambulatory activities. The outsole is secured to a lower surface of the midsole and forms a ground-engaging portion of the sole structure that is formed from a durable and wear-resistant material. The sole structure may also include a sockliner positioned within the void and proximal a lower surface of the foot to enhance footwear comfort.

[0003] The upper generally extends over the instep and toe areas of the foot, along the medial and lateral sides of the foot, and around the heel area of the foot. In some articles of footwear, such as basketball footwear and boots, the upper may extend upward and around the ankle to provide support or protection for the ankle. Access to the void on the interior of the upper is generally provided by an ankle opening in a heel region of the footwear. A lacing system is often incorporated into the upper to adjust the fit of the upper, thereby permitting entry and removal of the foot from the void within the upper. The lacing system also permits the wearer to modify certain dimensions of the upper, particularly girth, to accommodate feet with varying dimensions. In addition, the upper may include a tongue that extends under the lacing system to enhance adjustability of the footwear, and the upper may incorporate a heel counter to limit movement of the heel.

[0004] Various materials are conventionally utilized in manufacturing the upper. The upper of athletic footwear, for example, may be formed from multiple material elements. The materials may be selected based upon various properties, including stretch-resistance, wear-resistance, flexibility, air-permeability, compressibility, and moisture-wicking, for example. With regard to an exterior of the upper, the toe area and the heel area may be formed of leather, synthetic leather, or a rubber material to impart a relatively high degree of wear-resistance. Leather, synthetic leather, and rubber materials may not exhibit the desired degree of flexibility and air-permeability for various other areas of the exterior. Accordingly, the other areas of the exterior may be formed from a synthetic textile, for example. The exterior of the upper may be formed, therefore, from numerous material elements that each impart different properties to the upper. An intermediate or central layer of the upper may be formed from a lightweight polymer foam material that provides cushioning and enhances comfort. Similarly, an interior of the upper may be formed of a comfortable and moisture-wicking textile that removes perspiration from the area immediately surrounding the foot. The various material elements and other components may be joined with an adhesive or stitching. Accordingly, the conventional upper is formed from various material elements that each impart different properties to various areas of the footwear,

SUMMARY

[0005] An article of footwear has an upper and a sole structure secured to the upper. In various configurations, the upper includes a knitted component having a plurality of protruding areas that extend outward and away from a void within the upper for receiving a foot of a wearer. The protruding areas include one or both of (a) a first tubular structure and an inlaid strand extending through the first tubular structure and (b) a second tubular structure and yarn sections extending across the second tubular structure. In addition, a skin layer may be secured to the knitted component.

[0006] A method for manufacturing an upper for an article of footwear may include positioning a skin layer adjacent to a knitted component and in an overlapping configuration, the knitted component having regions with different thicknesses. The skin layer and the knitted component may be located between a first surface and a second surface of a press. The first surface includes a first material, and the second surface includes a second material, the first material having greater compressibility than the second material. In addition, the skin layer and the knitted component may be compressed between the first surface and the second surface to join the skin layer to the knitted component.

[0007] An article of footwear has an upper and a sole structure secured to the upper. In various configurations, the upper includes a foot region and an ankle region. The foot region covers at least a portion of a foot of a wearer and includes a foot part of a knitted component. The ankle region covers at least a portion of an ankle of the wearer and includes an ankle part of the knitted component. The foot part and the ankle part of the knitted component are formed from unitary knit construction. The foot region has a first degree of stretch and the ankle region has a second degree of stretch, with the first degree of stretch being less than the second degree of stretch.

[0008] An article of footwear has an upper and a sole structure secured to the upper. In various configurations, the upper includes a knitted component extending through a throat area of the upper. The knitted component defines a channel in the throat area, with the channel including two overlapping knit layers formed of unitary knit construction. The upper also includes a plurality of lace-receiving elements located on opposite sides of the throat area, two of the lace-receiving elements are located adjacent to opposite ends of the channel. A lace extends through the channel and engages the lace-receiving elements.

[0009] The advantages and features of novelty characterizing aspects of the invention are pointed out with particularity in the appended claims. To gain an improved understanding of the advantages and features of novelty, however, reference may be made to the following descriptive matter and accompanying figures that describe and illustrate various configurations and concepts related to the invention.

lululemon Ex. 1007
IPR Petition - USP 9,375,046

BRIEF DESCRIPTION OF THE DRAWINGS

[0010] The invention can be better understood with reference to the following drawings and description. The components in the figures are not necessarily to scale, emphasis instead being placed upon illustrating the principles of the invention. Moreover, in the figures, like reference numerals designate corresponding parts throughout the different views.

[0011] FIG. **1** is a lateral side elevational view of a first configuration of an article of footwear.

[0012] FIG. **2** is a medial side elevational view of the first configuration of the article of footwear.

[0013] FIG. **3** is a top plan view of the first configuration of the article of footwear.

[0014] FIGS. **4**A-**4**C are cross-sectional views of the first configuration of the article of footwear, as respectively defined by section lines **4**A-**4**C in FIG. **3**.

[0015] FIG. **5** is a top plan view of a knitted component and a skin layer from an upper of the first configuration of the article of footwear.

[0016] FIG. **6** is an exploded top plan view of the knitted component and the skin layer.

[0017] FIGS. **7**A-**7**C are cross-sectional views of the knitted component and the skin layer, as respectively defined by section lines **7**A-**7**C in FIG. **5**.

[0018] FIGS. **8**A and **8**B are perspective views of an exemplary portion of the knitted component and the skin layer.

[0019] FIGS. **9**A-**9**C are top plan views depicting further configurations of the knitted component.

[0020] FIGS. **10**A-**10**D are perspective views of a process for utilizing a press to bond the knitted component and the skin layer.

[0021] FIGS. **11**A-**11**D are cross-sectional views of the process for utilizing the press, as respectively defined by section lines **11**A-**11**D in FIGS. **10**A-**10**D.

[0022] FIG. **12** is a lateral side elevational view of a second configuration of the article of footwear.

[0023] FIG. **13** is a medial side elevational view of the second configuration of the article of footwear.

[0024] FIG. **14** is a top plan view of the second configuration of the article of footwear.

[0025] FIG. **15** is a cross-sectional view of the second configuration of the article of footwear, as defined by section line **15** in FIG. **14**.

[0026] FIG. **16** is a top plan view of a third configuration of the article of footwear.

[0027] FIG. **17** is a cross-sectional view of the third configuration of the article of footwear, as defined by section line **17** in FIG. **16**.

[0028] FIG. **18** is a top plan view of a tongue from the third configuration of the article of footwear.

[0029] FIG. **19** is a cross-sectional view of the tongue, as defined by section line **19** in FIG. **18**.

[0030] FIGS. **20** and **21** are top plan views of further configurations of the knitted component and a lace.

[0031] FIG. **22** is a cross-sectional view, as defined by section line **22** in FIG. **21**.

[0032] FIG. **23** is a bottom plan view of a configuration of the knitted component that includes an interior layer.

[0033] FIG. **24** is a cross-sectional view of the article of footwear corresponding with FIG. **4**A and depicting the interior layer.

[0034] FIGS. **25**A and **25**B are top plan views corresponding with FIG. **5** and depicting further configurations for the skin layer from an upper of the first configuration of the article of footwear,

DETAILED DESCRIPTION

[0035] The following discussion and accompanying figures disclose an article of footwear having an upper that includes a knitted component and a skin layer. The article of footwear is disclosed as having a general configuration suitable for walking or running. Concepts associated with the footwear, including the upper, may also be applied to a variety of other athletic footwear types, including baseball shoes, basketball shoes, cross-training shoes, cycling shoes, football shoes, soccer shoes, sprinting shoes, tennis shoes, and hiking boots, for example. The concepts may also be applied to footwear types that are generally considered to be non-athletic, including dress shoes, loafers, sandals, and work boots. The concepts disclosed herein apply, therefore, to a wide variety of footwear types.

[0036] General Footwear Structure

[0037] An article of footwear **100** is depicted in FIGS. **1**-**4**C as including a sole structure **110** and an upper **120**. Whereas sole structure **110** is located under and supports a foot of a wearer, upper **120** provides a comfortable and secure covering for the foot. As such, the foot may be located within a void in upper **120** to effectively secure the foot within footwear **100** or otherwise unite the foot and footwear **100**. Moreover, sole structure **110** is secured to a lower area of upper **120** and extends between the foot and the ground to attenuate ground reaction forces (i.e., cushion the foot), provide traction, enhance stability, and influence the motions of the foot, for example.

[0038] For reference purposes, footwear **100** may be divided into three general regions: a forefoot region **101**, a midfoot region **102**, and a heel region **103**. Forefoot region **101** generally encompasses portions of footwear **100** corresponding with forward portions of the foot, including the toes and joints connecting the metatarsals with the phalanges. Midfoot region **102** generally encompasses portions of footwear **100** corresponding with middle portions of the foot, including an arch area. Heel region **103** generally encompasses portions of footwear **100** corresponding with rear portions of the foot, including the heel and calcaneus bone. Footwear **100** also includes a lateral side **104** and a medial side **105**, which extend through each of regions **101**-**103** and correspond with opposite sides of footwear **100**. More particularly, lateral side **104** corresponds with an outside area of the foot (i.e. the surface that faces away from the other foot), and medial side **105** corresponds with an inside area of the foot (i.e., the surface that faces toward the other foot). Regions **101**-**103** and sides **104**-**105** are not intended to demarcate precise areas of footwear **100**. Rather, regions **101**-**103** and sides **104**-**105** are intended to represent general areas of footwear **100** to aid in the following discussion. In addition to footwear **100**, regions **101**-**103** and sides **104**-**105** may also be applied to sole structure **110**, upper **120**, and individual elements thereof.

[0039] The primary elements of sole structure **110** are a midsole **111**, an outsole **112**, and a sockliner **113**. Midsole **111** is secured to a lower surface of upper **120** and may be formed from a compressible polymer foam element (e.g., a polyurethane or ethylvinylacetate foam) that attenuates ground reaction forces (i.e., provides cushioning) when com-

lululemon Ex. 1007
IPR Petition - USP 9,375,046

pressed between the foot and the ground during walking, running, or other ambulatory activities. In further configurations, midsole **111** may incorporate plates, moderators, fluid-filled chambers, lasting elements, or motion control members that further attenuate forces, enhance stability, or influence the motions of the foot, or midsole **21** may be primarily formed from a fluid-filled chamber. Outsole **112** is secured to a lower surface of midsole **111** and may be formed from a wear-resistant rubber material that is textured to impart traction. Sockliner **113** is located within the void in upper **120** and is positioned to extend under a lower surface of the foot to enhance the comfort of footwear **100**. Although this configuration for sole structure **110** provides an example of a sole structure that may be used in connection with upper **120**, a variety of other conventional or nonconventional configurations for sole structure **110** may also be utilized. Accordingly, the features of sole structure **110** or any sole structure utilized with upper **120** may vary considerably.

[0040] Upper **120** includes an exterior surface **121** and an opposite interior surface **122**. Whereas exterior surface **121** faces outward and away from footwear **100**, interior surface **122** faces inward and defines a majority or a relatively large portion of the void within footwear **100** for receiving the foot. The void is shaped to accommodate the foot. When the foot is located within the void, therefore, upper **120** extends along a lateral side of the foot, along a medial side of the foot, over the foot, around the heel, and under the foot. Moreover, interior surface **121** may lay against the foot or a sock covering the foot. Upper **120** also includes a collar **123** that is primarily located in heel region **103** and forms an opening that provides the foot with access to the void. More particularly, the foot may be inserted into upper **120** through the opening formed by collar **123**, and the foot may be withdrawn from upper **120** through the opening formed by collar **123**.

[0041] A throat area **124** of upper **120** is located forward of collar **123** and primarily in midfoot region **102**. Although the extent of throat area **124** may vary, throat area **124** corresponds with an instep region or upper surface of the foot and includes a lace **125**, a plurality of lace-receiving elements **126**, and a tongue **127**. Lace **125** engages the various lace-receiving elements **126** and follows a zigzagging path between lace-receiving elements **126**. Moreover, lace **125** repeatedly-passes across throat area **124** and between opposite sides of throat area **124**. When using footwear **100**, lace **125** permits the wearer to modify dimensions of upper **120** to accommodate the proportions of the foot. More particularly, lace **125** may be manipulated in a conventional manner to permit the wearer to (a) tighten upper **120** around the foot and (b) loosen upper **120** to facilitate insertion and withdrawal of the foot from the void in upper **120** (i.e., through the opening formed by collar **123**). Although lace-receiving elements **126** are depicted as apertures in upper **120**, and with lace **125** passing through the apertures, lace-receiving elements **126** may be loops, eyelets, hooks, or D-rings.

[0042] A majority of upper **120** is formed from a knitted component **130** and a skin layer **140**, which are depicted separate from a remainder of footwear **100** in FIGS. **5** and **6**. Knitted component **130** may, for example, be manufactured through a flat knitting process and extends through each of regions **101-103**, along both lateral side **104** and medial side **105**, over forefoot region **101**, and around heel region **103**. Although portions of knitted component **130** form exterior surface **121**, knitted component **130** forms a majority or a relatively large portion of interior surface **122**, thereby defining a portion of the void within upper **120**. In some configurations, knitted component **130** may also extend under the foot. For purposes of example in various figures, however, a strobel sock **128** is secured to knitted component **130** and forms a majority of the portion of upper **120** that extends under the foot. In this configuration, sockliner **113** extends over strobel sock **128** and forms a surface upon which the foot rests. In addition, a seam **129** extends vertically through heel region **103**, as depicted in FIGS. **3** and **4**C, to join edges of knitted component **130**.

[0043] Skin layer **140** lays adjacent to knitted component **130** and is secured to an exterior of knitted component **130**, thereby forming a majority or a relatively large portion of exterior surface **121**. Various materials may be utilized to form skin layer **140**, including a polymer sheet, elements of leather or synthetic leather, a woven or non-woven textile, or a metal foil. As with knitted component **130**, skin layer **140** extends through each of regions **101-103**, along both lateral side **104** and medial side **105**, over forefoot region **101**, and around heel region **103**. Skin layer **140** is depicted as being absent from portions of throat area **124** (e.g., tongue **127**) and interior surface **122**. In further configurations of footwear **100**, skin layer **140** may be absent from other areas of upper **120** or may extend over portions of throat area **124** and into interior surface **122**.

[0044] The combination of knitted component **130** and skin layer **140** provides various advantages to footwear **100**. As an example, knitted component **130** and skin layer **140** impart a relatively tight and glove-like fit to upper **120** that secures the foot within footwear **100** during walking, running, and other ambulatory activities. When formed as a soccer shoe, for example, the relatively tight and glove-like fit may provide the wearer with enhanced feel and control of a ball. Skin layer **140** may also be utilized to reinforce areas of upper **120**. For example, skin layer **140** may inhibit stretch in knitted component **130** and may enhance the wear-resistance or abrasion-resistance of upper **120**. Skin layer **140** may also impart water-resistance to footwear **100**. Additionally, forming footwear **100** in this configuration may provide a relatively light weight or mass, support for the foot, uniform fit and conformance to a shape of the foot, and a relatively seamless interior with enhanced comfort for the wearer.

[0045] The discussion above presents various features and elements of upper **120**. In further configurations of footwear **100**, however, upper **120** may also include one or more of (a) a heel counter in heel region **103** for enhancing stability, (b) a toe guard in forefoot region **101** that is formed of a wear-resistant material, and (c) logos, trademarks, and placards with care instructions and material information. Accordingly, upper **120** may incorporate a variety of other features and elements, in addition to the features and elements discussed herein and shown in the figures.

[0046] Knitted Component Configuration

[0047] Knitted component **130** extends throughout upper **120** and forms a majority of interior surface **122**, thereby defining a portion of the void within upper **120**. Although seams may be present in knitted component **130**, a majority of knitted component **130** has a substantially seamless configuration. Moreover, knitted component **130** may be formed of unitary knit construction. As utilized herein, a knitted component (e.g., knitted component **130**) is defined as being formed of "unitary knit construction" when formed as a one-piece element through a knitting process. That is, the knitting process substantially forms the various features and struc-

lululemon Ex. 1007
IPR Petition - USP 9,375,046

tures of knitted component **130** without the need for significant additional manufacturing steps or processes. Although portions of knitted component **130** may be joined to each other (e.g., edges of knitted component **130** being joined together, as at seam **129**) following the knitting process, knitted component **130** remains formed of unitary knit construction because it is formed as a one-piece knit element. Moreover, knitted component **130** remains formed of unitary knit construction when other elements (e.g., lace **125**, strobel sock **127** logos, trademarks, placards) are added following the knitting process. Examples of various configurations of knitted components that may be utilized for knitted component **130** are disclosed in U.S. Pat. No. 6,931,762 to Dua; U.S. Pat. No. 7,347,011 to Dua, et al.; U.S. Patent Application Publication 2008/0110048 to Dua, et al.; U.S. Patent Application Publication 2010/0154256 to Dua; and U.S. Patent Application Publication 20120233882 to Huffa, et al., each of which are entirely incorporated herein by reference.

[0048] The primary elements of knitted component **130** are a knit element **131** and an inlaid strand **132**. Knit element **131** is formed from at least one yarn that is manipulated (e.g., with a knitting machine) to form a plurality of intermeshed loops that define a variety of courses and wales. That is, knit element **131** has the structure of a knit textile. Inlaid strand **132** extends through knit element **131** and passes between the various loops within knit element **131**. Although inlaid strand **132** generally extends along courses within knit element **131**, inlaid strand **132** may also extend along wales within knit element **131**. Advantages of inlaid strand **132** include providing support, stability, and structure. For example, inlaid strand **132** assists with securing upper **120** around the foot, limits deformation in areas of upper **120** (e.g., imparts stretch-resistance), and operates in connection with lace **125** to enhance the fit of footwear **100**. U.S. Patent Application Publication 20120233882 to Huffa, et al., which was referenced above and incorporated herein, provides discussion of the manner in which knitted component **130** may be formed, including the process of inlaying or otherwise locating inlaid strand **132** within knit element **131**.

[0049] Knit element **131** may incorporate various types and combinations of stitches and yarns. With regard to stitches, the yarn forming knit element **131** may have one type of stitch in one area of knit element **131** and another type of stitch in another area of knit element **131**. Depending upon the types and combinations of stitches utilized, areas of knit element **131** may have a plain knit structure, a mesh knit structure, or a rib knit structure, for example. The different types of stitches may affect the physical properties of knit element **131**, including aesthetics, stretch, thickness, air permeability, and abrasion-resistance of knit element **131**. That is, the different types of stitches may impart different properties to different areas of knitted component **130**. With regard to yarns, knit element **131** may have one type of yarn in one area of knit element **131** and another type of yarn in another area of knit element **131**. Depending upon various design criteria, knit element **131** may incorporate yarns with different deniers, materials (e.g., cotton, elastane, polyester, rayon, wool, and nylon), and degrees of twist, for example. The different types of yarns may affect the physical properties of knit element **131**, including aesthetics, stretch, thickness, air permeability, and abrasion-resistance of knit element **131**. That is, the different types of yarns may impart different properties to different areas of knitted component **130**. By combining various types and combinations of stitches and yarns, each area of knit element **131** may have specific properties that enhance the comfort, durability, and performance of footwear **100**. In some configurations, multiple yarns with different colors may be utilized to form knitted component **130**. When yarns with different colors are twisted together and then knitted, knitted component **130** may have a heathered appearance with multiple colors randomly distributed throughout upper **120**.

[0050] One or more of the yarns within knit element **131** may be partially formed from a thermoplastic polymer material, which softens or melts when heated and returns to a solid state when cooled. More particularly, the thermoplastic polymer material transitions from a solid state to a softened or liquid state when subjected to sufficient heat, and then the thermoplastic polymer material transitions from the softened or liquid state to the solid state when sufficiently cooled. As such, thermoplastic polymer materials are often used to join two objects or elements together. In this case, a yarn incorporating thermoplastic polymer material may be utilized to join (a) the yarn to other portions of the yarn, (b) the yarn to other yarns, (c) the yarn to inlaid strand **132**, or (d) knitted component **130** to skin layer **140**, for example.

[0051] Inlaid strand **132**, as noted above, extends through knit element **131** and passes between the various loops within knit element **131**. More particularly, inlaid strand **132** is located within the knit structure of knit element **131**. Referring to FIGS. **7**A and **7**B, for example, knit element **131** forms two separate and spaced textile layers, which effectively define a channel or tubular structure, and inlaid strand **132** is located between the spaced textile layers. In some configurations, however, knit element **131** may have the configuration of a single textile layer in the area of inlaid strand **132**. In either configuration, inlaid strand **132** is located within knit element **131** and between opposite surfaces of knit element **131**. Although inlaid strand **132** is primarily within knit element **131**, portions of inlaid strand **132** may be visible or exposed on one or both surfaces of knit element **131**.

[0052] When knitted component **130** is incorporated into footwear **100**, inlaid strand **132** extends in a generally vertical direction and from throat area **124** to an area where sole structure **110** is secured to upper **120**. More particularly, inlaid strand repeatedly passes through knit element **131** from throat area **124** to an area adjacent to sole structure **110**. In throat area **124**, inlaid strand may also extend around lace-receiving elements **126**, there by forming loops through which lace **125** passes. In comparison with knit element **131**, inlaid strand **132** may exhibit greater stretch-resistance. That is, inlaid strand **132** may stretch less than knit element **131**. Given that numerous sections of inlaid strand **132** extend toward sole structure **110** from throat area **124**, inlaid strand **132** imparts stretch-resistance to this area of upper **120**. Moreover, placing tension upon lace **125** may impart tension to inlaid strand **132**, thereby inducing the portion of upper **120** between throat area **124** and sole structure **110** to lay against the foot. As such, inlaid strand **132** operates in connection with lace **122** to assist with securing upper **120** around the foot and enhance the fit of footwear **100**.

[0053] The configuration of inlaid strand **132** may vary significantly. In addition to yarn, inlaid strand **132** may have the configurations of a filament (e.g., a monofilament), thread, rope, webbing, cable, or chain, for example. In comparison with the yarns forming knit element **131**, the thickness of inlaid strand **132** may be greater. In some configurations, inlaid strand **132** may have a significantly greater

lululemon Ex. 1007
IPR Petition - USP 9,375,046

thickness than the yarns of knit element **131**. Moreover, the materials forming inlaid strand **132** may include any of the materials for the yarn within knit element **131**, such as cotton, elastane, polyester, rayon, wool, and nylon, but may also include metals and a variety of engineering filaments that are utilized for high tensile strength applications, including glass, aramids (e.g., para-aramid and meta-aramid), ultra-high molecular weight polyethylene, and liquid crystal polymer. As another example, a braided polyester thread may also be utilized as inlaid strand **132**.

[0054] The combination of knitted component **130** and skin layer **140** provide various advantages to footwear **100**. In some configurations, however, skin layer **140** may be absent from footwear **100**. That is, knitted component **130** may be utilized individually to form portions of upper **120**, and knitted component **130** may form a majority of relatively large portion of each of surfaces **121** and **122**. Moreover, the presence of protruding areas **133** when skin layer **140** is absent may impart additional thickness or loft to upper **120**, while also varying the stretch properties of upper **120**. Although discussed in combination with skin layer **140**, therefore, knitted component **130** may be utilized individually.

[0055] Skin Layer Configuration

[0056] Skin layer **140** lays adjacent to knitted component **130** and is secured to knitted component **130** to form a portion of exterior surface **121**. As noted above, skin layer **140** may be formed from a polymer sheet, elements of leather or synthetic leather, a woven or non-woven textile, or a metal foil. When formed as a polymer sheet or polymer layer, skin layer **140** may initially be a polymer film, polymer mesh, polymer powder, or polymer resin, for example. With any of these structures, a variety of polymer materials may be utilized for skin layer **140**, including polyurethane, polyester, polyester polyurethane, polyether polyurethane, and nylon. An example of a non-woven textile with thermoplastic polymer filaments that may be bonded to knitted component **130** is disclosed in U.S. Patent Application Publication 2010/0199406 to Dua, et al., which is incorporated herein by reference. Moreover, additional considerations relating to skin layer **140** may be found in U.S. Patent Application Publication 2012/0246973 to Dua, which is incorporated herein by reference.

[0057] Although skin layer **140** may be formed from a thermoset polymer material, many configurations of skin layer **140** are formed from thermoplastic polymer materials (e.g., thermoplastic polyurethane). In general, a thermoplastic polymer material softens or melts when heated and returns to a solid state when cooled. More particularly, the thermoplastic polymer material transitions from a solid state to a softened or liquid stare when subjected to sufficient heat, and then the thermoplastic polymer material transitions from the softened or liquid state to the solid state when sufficiently cooled. As such, the thermoplastic polymer material may be melted, molded, cooled, re-melted, re-molded, and cooled again through multiple cycles. Thermoplastic polymer materials may also be welded or thermal bonded to textile elements, such as knitted component **130**.

[0058] In many configurations of footwear **100**, a single element of skin layer **140** is secured throughout knitted component **130** and covers substantially all of knitted component **130**. In further configurations, however, different elements of skin layer **140** may be formed from different materials and positioned in separate areas of knitted component **130**. That is, a portion of skin layer **140** formed from one material may be bonded to one area of knitted component **130**, and another portion of skin layer **140** formed from another material may be bonded to a different area of knitted component **130**. By varying the materials forming skin layer **140**, different properties may be applied to different areas of upper **120**. In other configurations, skin layer **140** may only cover specific areas of knitted component **130**, thereby leaving other areas of knitted component **130** exposed. Skin layer **140** may, therefore, be absent from some areas of knitted component **130**.

[0059] Skin layer **140** is discussed above as being positioned on an exterior of knitted component **130**. In some configurations, however, skin layer **140** may be bonded with an opposite surface of knitted component **130**, thereby forming a portion of interior surface **122**. In other configurations, two skin layers **140** may be bonded to opposite surfaces of knitted component **130**, or skin layer **140** may impregnate or otherwise extend into knitted component **130**.

[0060] Protruding Areas

[0061] Knitted component **130** includes a plurality of protruding areas **133** that extend outward and away from the void within upper **120**. Protruding areas **133** form bulges, protrusions, bumps, or other outwardly-extending portions in knitted component **130**. As with inlaid strand **132**, many of protruding areas **133** extend in a generally vertical direction and from throat area **124** to the area where sole structure **110** is secured to upper **120**. Some of protruding areas **133** correspond with and incorporate inlaid strand **132**. In addition, some of protruding areas **133** extend in a generally horizontal direction and between two other protruding areas **133**. That is, the horizontal protruding areas **133** extend between and effectively join with two of the vertical protruding areas **133**. In addition to providing a unique aesthetic to footwear **100**, protruding areas **133** may enhance the strength of upper **120** or impart a variety of different properties to upper **120**.

[0062] Skin layer **140** extends over protruding areas **133** and may be secured to protruding areas **133**, as well as other areas of knitted component **130**. As such, skin layer **140** forms corresponding bulges, protrusions, bumps, or other outwardly-extending portions at the locations of protruding areas **133** and on exterior surface **121**, as depicted in FIGS. **7**A and **7**C, for example. An advantage of this configuration is that the friction properties of footwear **100** may be controlled through the specific pattern that protruding areas **133** form in upper **120**. As an example, the combination of protruding areas **133** and skin layer **140** may provide enhanced control of a ball during the sport of soccer. That is, a soccer player may obtain enhanced control of a soccer ball through the raised or outwardly-extending portions of upper **120** that are formed by protruding areas **133**.

[0063] Protruding areas **133** may be formed to have various configurations. That is, multiple knit structures and knitting techniques may be utilized to form protruding areas **133**. As examples, each of FIGS. **8**A and **8**B depict an exemplary portion of upper **120** with two different configurations for protruding areas **133**. More particularly, a first of protruding areas **133** includes a first tubular structure **134** and a portion of inlaid strand **132**, and a second of protruding areas **133** includes a second tubular structure **135** and a plurality of yarn sections **136**. Each of these configurations will be discussed in more detail below.

[0064] First tubular structure **134** is an area of knit element **131** with two separate and spaced textile layers **137**. Whereas edge areas of first tubular structure **134** are joined and formed of unitary knit construction, a central area is unjoined and

lululemon Ex. 1007
IPR Petition - USP 9,375,046

forms a channel in which inlaid strand **132** is located. Although first tubular structure **134** alone is sufficient to form one of protruding areas **133**, the presence of inlaid strand **131** provides additional thickness. Inlaid strand **132** extends longitudinally and through first tubular structure **134**, thereby extending along a length of first tubular structure **134**.

[0065] Second tubular structure **135** is an area of knit element **131** with two separate and spaced textile layers **138**, thereby having a configuration that is similar to first tubular structure **134**. Whereas edge areas of second tubular structure **135** are joined and formed of unitary knit construction, a central area is unjoined and forms a channel in which the plurality of yarn sections **136** are located. Although second tubular structure **135** alone is sufficient to form one of protruding areas **133**, the presence of yarn sections **136** provides additional thickness.

[0066] Yarn sections **136** extend laterally and across second tubular structure **135**, thereby extending across a width of second tubular structure **135** rather than along a longitudinal length of second tubular structure **135**. Although the manner in which yarn sections **136** are secured may vary, yarn sections **136** are depicted as crossing each other in FIGS. **7**A, **7**C, **8**A, and **8**B and may form tuck stitches on opposite sides of second tubular structure **135**. That is, tuck stitches may join yarn sections **136** with opposite sides of second tubular structure **135**. As depicted in a broken-away area of FIG. **8**B, one of protruding areas **133** (i.e., a horizontal protruding area **133**) includes additional yarn sections **136** and extends between and effectively joins tubular structures **134** and **135**, thereby extending from first tubular structure **134** to second tubular structure **135**. Although yarn sections **136** may cross each other in extending across the width of second tubular structure **135**, yarn sections **136** may have various other configurations. As examples, yarn sections **136** may lay in a plane and not cross each other, or yarn sections **136** may extend longitudinally and along a length of second tubular structure **135**.

[0067] As discussed above, protruding areas **133** form bulges, protrusions, bumps, or other outwardly-extending portions in knitted component **130**. As such, protruding areas **133** are portions of knitted component **130** that have greater thickness than other areas of knitted component **130**. In this configuration, a majority or a relatively large portion of knitted component **130** has a first thickness and the various protruding areas **133** have a second thickness, with the first thickness being less than the second thickness. Depending upon the knit structures and knitting techniques that are utilized to form knitted component **130**, as well as the yarns utilized in knitted component **130**, the difference between the first thickness and the second thickness may range from one to ten millimeters or more. In many configurations, the first thickness is less than four millimeters, and the second thickness is at least two millimeters greater than the first thickness.

[0068] The specific pattern that protruding areas **133** form in upper **120** may vary significantly. Referring to FIGS. **1** and **2**, for example, protruding areas **133** extend though a majority of lateral side **104** and medial side **105**, but are absent from a forward portion of forefoot region **101** and a rear portion of heel region **103**. The locations and configurations of protruding areas **133** may, however vary significantly. As an example, FIG. **9**A depicts a configuration wherein the spacing between various protruding areas **133** varies throughout knitted component **130**. Moreover, protruding areas **133** that extend between and connect other protruding areas **133** are present in some areas, but absent in other areas. Although protruding areas **133** are present in an area of knitted component **130** that corresponds with forefoot region **101**, protruding areas **133** are absent in areas corresponding with heel region **103**. In this configuration, knit element **131** extends across a region corresponding with throat area **124**, thereby replacing tongue **127**. FIG. **9**B depicts another configuration wherein protruding areas **133** are present throughout knitted component **130**. Another configuration is depicted in FIG. **9**C, wherein protruding areas **133** are located to correspond with inlaid strand **132**, but are absent in other areas. In addition, in each of the configurations depicted in FIGS. **9**A-**9**C, portions of inlaid strand **132** are exposed to form loops that receive lace **125**. Accordingly, various aspects regarding knitted component **130** and protruding areas **133** may vary considerably.

[0069] Bonding Process

[0070] A variety of processes may be utilized to join knitted component **130** and skin layer **140**. In some configurations, skin layer **140** may be formed from a thermoplastic polymer material, which may be welded or thermal bonded to knitted component **130**. As discussed above, a thermoplastic polymer material melts when heated and returns to a solid state when cooled sufficiently. Based upon this property of thermoplastic polymer materials, thermal bonding processes may be utilized to form a thermal bond that joins portions of skin layer **140** to knitted component **130**. As utilized herein, the term "thermal bonding" or variants thereof is defined as a securing technique between two elements that involves a softening or melting of a thermoplastic polymer material within at least one of the elements such that the materials of the elements are secured to each other when cooled. Similarly, the term "thermal bond" or variants thereof is defined as the bond, link, or structure that joins two elements through a process that involves a softening or melting of a thermoplastic polymer material within at least one of the elements such that the materials of the elements are secured to each other when cooled. As examples, thermal bonding may involve (a) the melting or softening of skin layer **140** such that the thermoplastic polymer material intermingles with materials of knitted component **130** and are secured together when cooled and (b) the melting or softening of skin layer **140** such that the thermoplastic polymer material extends into or infiltrates the structure of knitted component **130** (e.g., extends around or bonds with filaments or fibers in knitted component **130**) to secure the elements together when cooled. Additionally, thermal bonding does not generally involve the use of stitching or adhesives, but involves directly bonding elements to each other with heat. In some situations, however, stitching or adhesives may be utilized to supplement the thermal bond or the joining of elements through thermal bonding.

[0071] The bonding process utilizes a press **150**, which includes a first press portion **151** and a second press portion **152**, as depicted in FIGS. **10**A and **11**A. Each of press portions **151** and **152** have facing surfaces that compress knitted component **130** and skin layer **140** together. The surfaces of press portions **151** and **152** are substantially planar and include materials with different compressibilities. More particularly, first press portion **151** includes a first material **153** and second press portion **152** includes a second material **154**. In comparison, first material **153** has greater compressibility than second material **154**. As examples of suitable materials, (a) first material **153** may be silicone and second material **154** may be steel, (b) both of materials **153** and **154** may be silicone, with first material **153** having greater thickness than second material **154**, or (c) both of materials **153** and **154** may

lululemon Ex. 1007
IPR Petition - USP 9,375,046

be silicone, with first material **153** having lesser density or hardness than second material **154**. A variety of other materials may also be utilized, including various polymers and foams, such as ethylvinylacetate, and rubber. An advantage to silicone, however, relates to compression set. More particularly, silicone may go through numerous compression operations without forming indentations or other surface irregularities.

[0072] A process for bonding or otherwise joining knitted component **130** and skin layer **140** will now be discussed. In order to illustrate details associated with the bonding process, the exemplary portions of knitted component **130** and skin layer **140** that are depicted in FIGS. **8**A and **8**B are utilized in FIGS. **10**A-**10**D and **11**A-**11**D. One skilled in this art will recognize, however, that the concepts discussed herein and depicted in the figures may be applied to the entirety of knitted component **130** and skin layer **140**. Referring again to FIGS. **10**A and **11**A, skin layer **140** is positioned adjacent to knitted component **130** and in an overlapping configuration. Whereas skin layer **140** is positioned adjacent to first press portion **151**, knitted component **130** is positioned adjacent to second press portion **152**. More particularly, skin layer **140** is positioned to contact first material **153** (i.e., the more compressible material), and knitted component **130** is positioned to contact second material **154** (i.e., the less compressible material). In order to properly position knitted component **130** and skin layer **140**, one or both of (a) a jig that holds the components relative to each other and (b) a shuttle frame or other device that moves the components may be utilized. Additionally, a jig or other device may assist with ensuring that knitted component **130** retains a proper shape and remains in a generally planar configuration during the bonding process.

[0073] Press **150** is utilized to compress knitted component **130** and skin layer **140** together. In order to join knitted component **130** and skin layer **140**, however, one or both of knitted component **130** and skin layer **140** are heated to a temperature that facilitates bonding. Various radiant heaters or other devices may be utilized to heat knitted component **130** and skin layer **140** prior to placement between press portions **151** and **152**. In some manufacturing processes, however, press **150** may be heated such that contact between press **150** and knitted component **130** and skin layer **140** raises the temperature of the components to a level that facilitates bonding. Accordingly, the point at which one or both of knitted component **130** and skin layer **140** are heated during this process may vary.

[0074] Once knitted component **130** and skin layer **140** are positioned, press portions **151** and **152** translate toward each other and begin to dose upon the components such that (a) the surface of first press portion **151** having first material **153** begins to contact skin layer **140** and (b) the surface of second press portion **152** having second material **154** begins to contact knitted component **130**, as depicted in FIGS. **10**B and **11**B. Press portions **151** and **152** then translate further toward each other to fully compress the components, as depicted in FIGS. **10**C and **11**C. At this stage, skin layer **140** is effectively bonded or otherwise joined to knitted component **130**. More particularly, the compressive force of press **150**, coupled with the elevated temperature of the compressed components, forms a thermal bond that joins knitted component **130** and skin layer **140**.

[0075] As noted above, first material **153** compresses more easily than second material **154**. Referring to FIGS. **10**C and **11**C, areas of skin layer **140** that are adjacent to protruding areas **133** press into first material **153**, whereas second material **154** remains more planar, but compresses to a lesser degree. Due to the different compressibilities between materials **153** and **154**, first material **153** compresses at the locations of protruding areas **133**. Moreover, (a) portions of skin layer **140** that are in contact protruding areas **133** of knitted component **130** protrude into the surface formed by first material **153** to a first depth and (b) portions of skin layer **140** that are in contact with other regions of knitted component **130** (i.e., regions with lesser thickness) protrude into the surface formed by first material **153** to a second depth, the first depth being greater than the second depth. When bonding is complete, press **150** is opened and the bonded components are removed and permitted to cool, as depicted in FIGS. **10**D and **11**D. As a final step in the process, the combination of knit component **130** and skin layer **140** may be incorporated into upper **120** of footwear **100**.

[0076] The relative hardnesses, densities, and thicknesses between materials **153** and **154** may vary considerably to provide different compressibilities between the surfaces of press **150**. By varying the hardnesses, densities, and thicknesses, the compressibilities of the surfaces may be tailored to specific pressing operations or configurations. While hardness, density, and thickness may each be considered, some configurations of press **150** may have materials **153** and **154** with only different hardnesses, only different densities, or only different thicknesses. Additionally, some configurations of press **150** may have materials **153** and **154** with (a) the same hardnesses and densities, but different thicknesses, (b) the same hardnesses and thicknesses, but different densities, or (c) the same densities and thicknesses, but different hardnesses. Accordingly, the various properties of materials **153** and **154** may be modified in various ways to achieve different relative compressibilities between the surfaces of press **150**.

[0077] Each of materials **153** and **154** are depicted as having a substantially planar surface. Depending upon the configuration of knitted component **130** and the various protruding areas **133**, however, the surfaces of materials **153** and **154** may also be contoured. For example, first material **153** may include various depressions or indentations that correspond with the positions of protruding areas **133**, thereby enhancing the degree to which skin layer **140** wraps around protruding areas **133**.

[0078] Press **150** provides one example of a device that may be utilized to bond knitted component **130** and skin layer **140**. As another example, one of press portions **151** and **152** may be replaced with a flexible membrane and a pump may be utilized to evacuate air from between the membrane and second press portion **152**. As the air is evacuated, the membrane will press upon skin layer **140** and induce bonding. As another example, a dual membrane system may be utilized to compress knitted component **130** and skin layer **140** together.

[0079] An advantage of selecting materials **153** and **154** to have different compressibilities relates to the three-dimensional aspect of upper **120** that protruding areas **133** provide. More particularly, the different compressibilities ensures that protruding areas **133** continue to form bulges, protrusions, bumps, or other outwardly-extending portions when knitted component **130** and skin layer **140** are compressed and bonded. In the absence of compressible materials, the degree to which upper **120** includes outwardly-extending portions at protruding areas **133** may be lessened.

lululemon Ex. 1007
IPR Petition - USP 9,375,046

[0080] Ankle Cuff Configuration

[0081] Another configuration of footwear **100** is depicted in FIGS. **12-15** as including an ankle cuff **160** for covering at least a portion of an ankle of the wearer. In addition to covering the foot, therefore, upper **120** extends upward and covers a portion of the ankle. For reference purposes, upper **120** may be divided into two general regions: a foot region **106** and an ankle region **107**, as shown in FIGS. **12**, **13**, and **15**. Foot region **106** extends through each of regions **101-103** and generally encompasses portions of upper **120** corresponding with the foot. In many configurations of footwear **100**, foot region **106** corresponds with portions of upper **120** that are intended to be below the lateral malleolus and the medial malleolus (i.e., the bony prominences on each side of the ankle) of the wearer. Ankle region **107** is primarily located in heel region **103** and generally encompasses portions of upper **120** corresponding with the ankle. In many configurations of footwear **100**, ankle region **107** corresponds with portions of upper **120** that are intended to cover and extend above the lateral malleolus and the medial malleolus.

[0082] Ankle cuff **160** is located in ankle region **107** and forms an ankle part of knitted component **130**. A remainder of knitted component **130**, which is located in foot region **106**, forms a foot part of knitted component **130**. Whereas the foot part of knitted component **130** covers the foot of the wearer, the ankle part of knitted component **130**, which includes ankle cuff **160**, covers the ankle of the wearer when footwear **100** is worn. Moreover, ankle cuff **160** and the ankle part of knitted component **130** may be formed of unitary knit construction with the foot part of knitted component **130**.

[0083] Although seam **129** may be present in ankle cuff **160**, the ankle part of knitted component **130** has a continuous structure for extending entirely around the ankle of the wearer. Referring to the top plan view of FIG. **14**, ankle cuff **160** forms a circular, oval, or otherwise continuous and rounded opening **161** that provides access to the void within upper **120**. Opening **161** may have relatively large dimensions that allow the foot to pass through and into the void. In many configurations of footwear **100**, however, opening **161** stretches to accommodate the foot. Moreover, ankle cuff **160** may have dimensions that are less than an average ankle, and ankle cuff may remain somewhat stretched and lay firmly against the ankle once the foot is located within the void. Accordingly, ankle cuff **160** and other portions of knitted component **130** in ankle region **107** may be formed to have stretch properties.

[0084] Whereas ankle region **107** has stretch properties, foot region **108** of upper **120** may stretch to a lesser degree to provide support for the foot and limit movement of the foot relative to sole structure **120**. That is, foot region **106** may have a first degree of stretch and ankle region **107** may have a second degree of stretch, with the first degree of stretch being less than the second degree of stretch. In some configurations, portions of knitted component **130** in both of region **106** and **107** may have similar stretch properties, and the presence of inlaid strand **132** and skin layer **140** in foot region **106** may limit stretch in foot region **106**. In other configurations, the ankle part of knitted component **130** may be formed from yarns or knit structures that impart stretch, whereas the foot part of knitted component **130** may be formed from yarns or knit structures that impart less stretch.

[0085] In order to enhance the stretch properties of ankle cuff **160**, skin layer **140** may be absent from ankle region **107**. That is, skin layer **140** may be absent from the ankle part of knitted component **130**. In this configuration, the ankle part of knitted component **130**, including ankle cuff **160**, forms a portion of exterior surface **121** and interior surface **122** in ankle region **107**. As such, skin layer **140** and the portions knitted component **130** that form ankle cuff **160** form a majority of exterior surface **121**, and knitted component **130** alone may form a relatively large portion of interior surface **122**.

[0086] In the area of ankle cuff **160**, skin layer **140** forms a concave edge **141** that extends downward on each of sides **104** and **105**. More particularly, skin layer **140** may be absent from areas of knitted component **130** that cover the lateral malleolus and the medial malleolus. An advantage of this configuration is that ankle cuff **160** may stretch over the lateral malleolus and the medial malleolus, thereby enhancing the comfort of footwear **100**. In other configurations, skin layer **140** may extend upward to cover the lateral malleolus and the medial malleolus, or edge **141** may be relatively straight or convex in the area of ankle cuff **160**.

[0087] Based upon the above discussion, ankle cuff **160** may exhibit greater stretch than other portions of upper **120**. In addition to allowing the foot to enter footwear **100**, this structure provides support for the foot and limits movement of the foot relative to sole structure **120**. In addition, ankle cuff **160** may remain in a stretched state and lay against the ankle when footwear **100** is worn, which imparts two advantages: First, ankle cuff **160** prevents or limits dirt, dust, and other debris from entering footwear **100**. Second, the wearer may sense the presence of ankle cuff **160** around the ankle, which enhances the wearer's proprioceptive awareness of the foot.

[0088] Lace Channel Configuration

[0089] A further configuration of footwear **100** is depicted in FIGS. **16** and **17** as including various lace channels **170** in tongue **127**. Lace **125** passes through lace channels **170**, thereby locating portions of lace **125** within tongue **127**. Referring to FIGS. **18** and **19**, which depict tongue **127** separate from a remainder of footwear **100**, each of lace channels **170** are oriented diagonally with respect to a longitudinal axis of footwear **100**. The locations of lace channels **170** generally correspond with the locations of lace-receiving elements **126** and follow the natural path of lace **125** as it passes between lace-receiving elements **126**. That is, the positions and orientations of lace channels **170** are selected such that two of lace-receiving elements **126** are located adjacent to opposite ends of each lace channel **170**. In effect, therefore, lace channels **170** are located along a line that extends between two lace-receiving elements **126**. Moreover, lace **125** extends through the various lace channels **170** and engages lace-receiving elements **126** that are located on opposite sides of lace channels **170**. As such, lace **125** follows a zigzagging path between lace-receiving elements **126**.

[0090] Lace channels **170** have a structure that is similar to tubular structures **134** and **135**. As such, lace channels **170** include two separate and spaced textile layers **171** that overlap each other. Whereas edge areas of lace channels **170** are joined and formed of unitary knit construction, a central area is enjoined and forms a tubular structure in which lace **125** is located. That is, lace **125** extends longitudinally and through each lace channel **170**, thereby extending along a length of each lace channel **170**.

[0091] Although various methods may be utilized to form tongue **127**, a knitting process (e.g., flat knitting process) may be utilized. In configurations where a similar knitting process is utilized for tongue **127** and knitted component **130**, each of

lululemon Ex. 1007
IPR Petition - USP 9,375,046

tongue **127** and knitted component **130** may have similar properties, materials, and aesthetics. Additionally, an advantage of the knitting process is that lace channels **170** may be formed of unitary knit construction with a remainder of tongue **127**, which provides efficient manufacture and imparts a smooth and seamless configuration to tongue **127**.

[0092] A configuration of knitted component **130** in combination with lace **125** is depicted in FIG. **20**. As with the configurations in FIGS. **9A-9C**, knit element **131** extends across a region corresponding with throat area **124**, thereby replacing tongue **127**. Moreover, knit element **131** forms the various lace channels **170**. As with the various lace channels **170** in tongue **127**, lace channels **170** in this configuration are two separate and spaced textile layers that overlap each other, are formed of unitary knit construction, and receive lace **125**.

[0093] Lace **125** is depicted as extending through lace channels **170** in FIG. **20**. In place of apertures that form lace-receiving elements **126**, inlaid strand **132** is exposed and forms loops for receiving lace **125**. That is, the loops formed by inlaid strand **132** are lace-receiving elements **126**, which are located on opposite sides of throat area **124**. Lace **125** extends through (a) the loops formed by inlaid strand **132** and (b) the various lace channels **170**. As with tongue **127**, each of lace channels **170** are oriented diagonally with respect to a longitudinal axis and follow the natural path of lace **125**. That is, the positions and orientations of lace channels **170** are selected such that two loops are located adjacent to opposite ends of each lace channel **170**. As such, lace **125** follows a zigzagging path between the loops formed by inlaid strand **132**.

[0094] Lace channels **170** may have various lengths. In FIG. **16**, ends of lace channels **170** are positioned adjacent to an edge of knitted component **130** in throat area **124**. Although knitted component **130** overlaps portions of tongue **127**, ends of lace channels **170** are exposed and receive lace **125**. In FIG. **20**, ends of lace channels **170** are positioned adjacent to the loops that form lace-receiving elements **126**. In either configuration, one or more of lace channels **170** may have a length greater than three centimeters. In other configurations, however, lace channels **170** may range from one to more than ten centimeters.

[0095] A further configuration of knitted component **130** is depicted in FIGS. **21** and **22** as defining various apertures **172** between loops formed by inlaid strand **132** and in the region corresponding with throat area **124**. Apertures **172** form openings that extend through knit element **131**. In this configuration, lace **125** extends through the various apertures **172**, and portions of lace **125** are located adjacent to an opposite side of knit element **131**. More particularly, lace **125** passes through the loops formed by inlaid strand **132** and enters apertures **172**, thereby positioning portions of lace **125** that are between the loops adjacent to the opposite side of knit element **131**. The locations of apertures **172** generally correspond with the locations of the loops formed by inlaid strand **132** and follow the natural path of lace **125**. That is, apertures **172** are located along a line that extends between two of the loops formed by inlaid strand **132**.

FURTHER CONFIGURATIONS

[0096] Various configurations of footwear **100**, upper **120**, knitted component **130**, and skin layer **140** are discussed above. There configurations, however, are intended to provide examples of structures and other features that may be incorporated into footwear **100**. Although many variations upon footwear **100**, upper **120**, knitted component **130**, and skin layer **140** are possible, some additional configurations are discussed below.

[0097] In many configurations of footwear **100**, knitted component **130** forms a majority of interior surface **122**. Referring to FIGS. **23** and **24**, an interior layer **180** is depicted as being secured to knitted component **130** and forming a portion of interior surface **122**. Interior layer **180** may inhibit stretch in upper **120** and may enhance the wear-resistance or abrasion-resistance of upper **120**.

[0098] Interior layer **180** may also impart water-resistance to footwear **100**. Additionally, forming footwear **100** to include interior layer **180** may provide uniform fit and conformance to the foot, a relatively seamless interior with enhanced comfort for the wearer, a relatively light weight, and support for the foot. Although interior layer **180** may be utilized in configurations that also include skin layer **140**, interior layer **180** may be utilized in the absence of skin layer **140** or as a replacement for skin layer **180**.

[0099] Interior layer **180** may extend over substantially all of knitted component **130** or may be absent in specific areas of knitted component **130**. In areas corresponding with forefoot region **101** for example, interior layer **180** defines a plurality of apertures **181** that may enhance the stretch, flex, and breathability properties of upper **120**. By varying the size, position, and number of apertures **181**, the properties of upper **120** may also be varied. In areas adjacent to inlaid strand **132**, interior layer **180** is formed to define larger apertures and has an articulated structure, which may promote flex in areas corresponding with midfoot region **102**, while also providing stability and stretch-resistance. This portion of interior layer **180** may also experience tension and resist stretching when lace **125** is tightened. As such, the combination of interior layer **180** and inlaid strand **132** may impart greater resistance to stretch in upper **120**. In areas corresponding with heel region **103**, interior layer **180** is located to provide additional stretch-resistance and durability to collar **123**. It should also be noted that interior layer **180** extends to edges of knitted component **130** that are joined with strobel sock **128**, which effectively ties or joins interior layer **180** to sole structure **110**.

[0100] Various materials may be utilized for interior layer **180**. As an example, interior layer **180** may be a polymer layer with many of the properties of skin layer **140**. Interior layer **180** may also be a textile, such as a microfiber textile, that is adhered or bonded to knitted component **130**. In some configurations, interior layer **180** may have a layered configuration that includes a thermoplastic polymer material for thermal bonding with knitted component **130**.

[0101] Although skin layer **140** may cover substantially all of knitted component **130**, skin layer **140** may be absent from some areas of knitted component **130**. With reference to examples discussed above, skin layer **140** may be absent from throat area **124** or ankle region **107**. As another example, FIG. **25A** depicts skin layer **140** as being present in areas corresponding with midfoot region **103** and areas that include inlaid strand **132**, but absent in areas corresponding with forefoot region **101** and heel region **103**. Moreover, skin layer **140** covers some of protruding areas **133**, but leaves other protruding areas **133** exposed. Accordingly, skin layer **140** may only cover specific areas of knitted component **130**, thereby leaving other areas of knitted component **130** exposed.

[0102] A single element of skin layer **140** is secured to knitted component **130** in many configurations discussed

lululemon Ex. 1007
IPR Petition - USP 9,375,046

above. Referring to FIG. **25**B, a parting line **142** extends longitudinally through an area corresponding with forefoot region **101**, thereby separating different sections of skin layer **140**. In this configuration, each section of skin layer **140** may have different properties. More particularly, the material forming skin layer **140**, the thickness of the material, or other properties may vary between the sections of skin layer **140**, thereby imparting different properties to different areas of upper **120**. In further configurations, parting line **142** may be located in other areas, or the sections of skin layer **140** may be spaced from each other to expose a portion of knitted component **130**.

[0103] The invention is disclosed above and in the accompanying figures with reference to a variety of configurations. The purpose served by the disclosure, however, is to provide an example of the various features and concepts related to the invention, not to limit the scope of the invention. One skilled in the relevant art will recognize that numerous variations and modifications may be made to the configurations described above without departing from the scope of the present invention, as defined by the appended claims.

What is claimed is:

1. An article of footwear having an upper and a sole structure secured to the upper, the upper comprising:

a foot region for covering at least a portion of a foot of a wearer, the foot region including a foot part of a knitted component, and the foot region having a first degree of stretch; and

an ankle region for covering at least a portion of an ankle of the wearer, the ankle region including an ankle part of the knitted component, and the ankle region having a second degree of stretch;

the foot part of the knitted component and the ankle part of the knitted component being formed from unitary knit construction, and the first degree of stretch being less than the second degree of stretch.

2. The article of footwear recited in claim **1**, wherein a skin layer covers at least a portion of the foot part of the knitted component and forms a portion of an exterior surface of the upper.

3. The article of footwear recited in claim **2**, wherein the skin layer is absent from the ankle part of the knitted component.

4. The article of footwear recited in claim **3**, wherein the ankle part of the knitted component forms (a) another portion of the exterior surface of the upper and (b) a portion of an interior surface of the upper.

5. The article of footwear recited in claim **1**, wherein the ankle part of the knitted component has a continuous structure for extending entirely around the ankle of the wearer.

6. The article of footwear recited in claim **1**, wherein the foot part of the knitted component defines a plurality of protruding areas that extend outward and away from a void within the upper for receiving the foot of the wearer.

7. The article of footwear recited in claim **6**, wherein the protruding areas include an inlaid strand that extends from a throat area of the upper to an area where the upper is secured to the sole structure.

8. The article of footwear recited in claim **6**, wherein the protruding areas include a tubular structure and an inlaid strand extending through the tubular structure.

9. The article of footwear recited in claim **6**, wherein the protruding areas include a tubular structure and yarn sections extending across the tubular structure.

10. The article of footwear recited in claim **9**, wherein the yarn sections extending across the tubular structure form tuck stitches.

11. An article of footwear having an upper and a sole structure secured to the upper, the upper comprising:

a knitted component that includes (a) a foot part for covering at least a portion of a foot of a wearer and (b) an ankle part for covering at least a portion of an ankle of the wearer, the foot part and the ankle part being formed of unitary knit construction; and

a skin layer that covers at least a portion of the foot part of the knitted component and forms a portion of an exterior surface of the upper, the skin layer being absent from the ankle part of the knitted component.

12. The article of footwear recited in claim **11**, wherein the foot part of the knitted component is in a foot region of the upper and the ankle part of the knitted component is in an ankle region of the upper, the foot region having less stretch than the ankle region.

13. The article of footwear recited in claim **11**, wherein the ankle part of the knitted component forms (a) another portion of the exterior surface of the upper and (b) a portion of an interior surface of the upper.

14. The article of footwear recited in claim **11**, wherein the ankle part of the knitted component has a continuous structure for extending entirely around the ankle of the wearer.

15. The article of footwear recited in claim **11**, wherein the foot part of the knitted component defines a plurality of protruding areas that extend outward and away from a void within the upper for receiving the foot of the wearer.

16. The article of footwear recited in claim **15**, wherein the protruding areas include a tubular structure and an inlaid strand extending through the tubular structure.

17. The article of footwear recited in claim **15**, wherein the protruding areas include a tubular structure and yarn sections extending across the tubular structure.

18. The article of footwear recited in claim **17**, wherein the yarn sections extending across the second tubular structure form tuck stitches.

19. The article of footwear recited in claim **15**, wherein the protruding areas include (a) a first tubular structure and an inlaid strand extending through the first tubular structure and (b) a second tubular structure and yarn sections extending across the second tubular structure.

20. The article of footwear recited in claim **19**, wherein the first tubular structure and the second tubular structure extend from a throat area of the upper to an area where the sole structure is secured to the upper.

* * * * *

lululemon Ex. 1007
IPR Petition - USP 9,375,046