US 20100154256A1

(19) United States

(12) Patent Application Publication

(10) Pub. No.: US 2010/0154256 A1

(43) Pub. Date: Jun. 24, 2010

Dua

(54) **ARTICLE OF FOOTWEAR HAVING AN UPPER INCORPORATING A KNITTED COMPONENT**

(75) Inventor: **Bhupesh Dua**, Portland, OR (US)

Correspondence Address:
PLUMSEA LAW GROUP, LLC
10411 MOTOR CITY DRIVE, SUITE 320
BETHESDA, MD 20817 (US)

(73) Assignee: **Nike, Inc.**, Beaverton, OR (US)

(21) Appl. No.: **12/338,726**

(22) Filed: **Dec. 18, 2008**

Publication Classification

(51) **Int. Cl.**

A43B 13/00	(2006.01)
A43C 11/00	(2006.01)
A43B 23/00	(2006.01)
A43D 8/00	(2006.01)
D04B 1/22	(2006.01)

(52) **U.S. Cl.** ..... **36/25 R**; 36/50.1; 36/45; 12/146 B; 12/146 C; 66/170

(57) **ABSTRACT**

An article of footwear has an upper that includes a knitted component and a sole structure secured to the upper. The knitted component may define a tube formed of unitary knit construction, and a strand may extend through a length of the tube. As another example, the knitted component may have a pair of at least partially coextensive knitted layers formed of unitary knit construction, and a plurality of floating yarns may extend between the knitted layers. In some configurations, the knit type or yarn type may vary in different regions of the knitted component to impart different properties. Additionally, the knitted component may incorporate a thermoplastic yarn that is fused in different regions of the knitted component to impart different properties. A flat knitting process or a variety of other knitting processes may be utilized to form the knitted component.

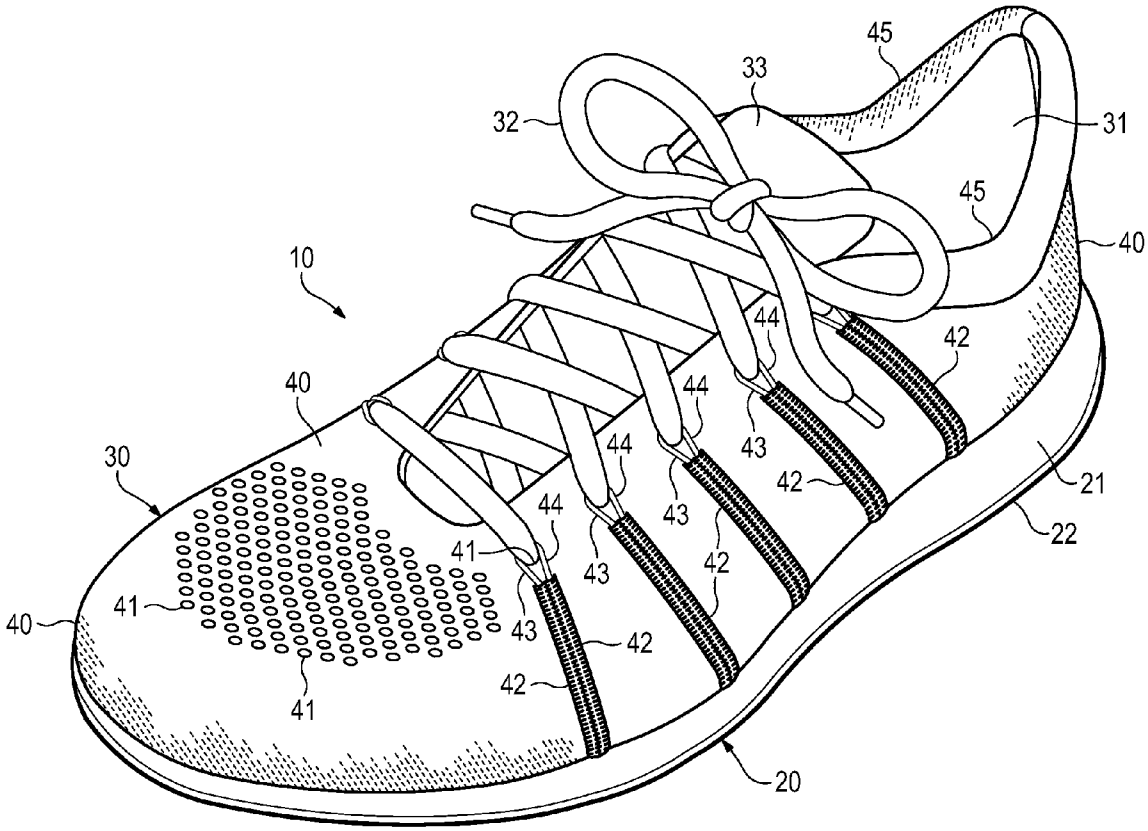

lululemon Ex. 1010
IPR Petition - USP 9,375,046

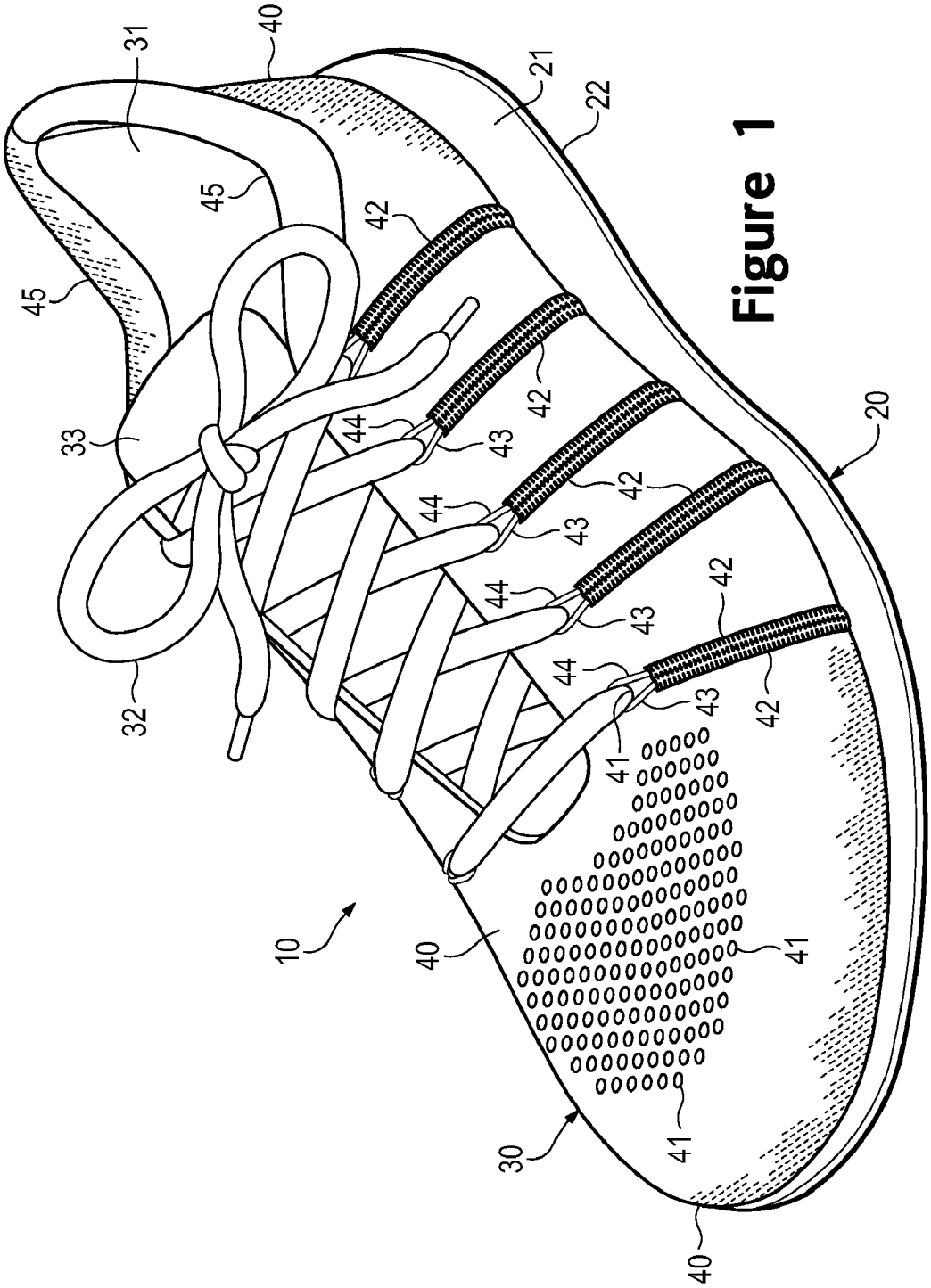

Figure 1

lululemon Ex. 1010
IPR Petition - USP 9,375,046

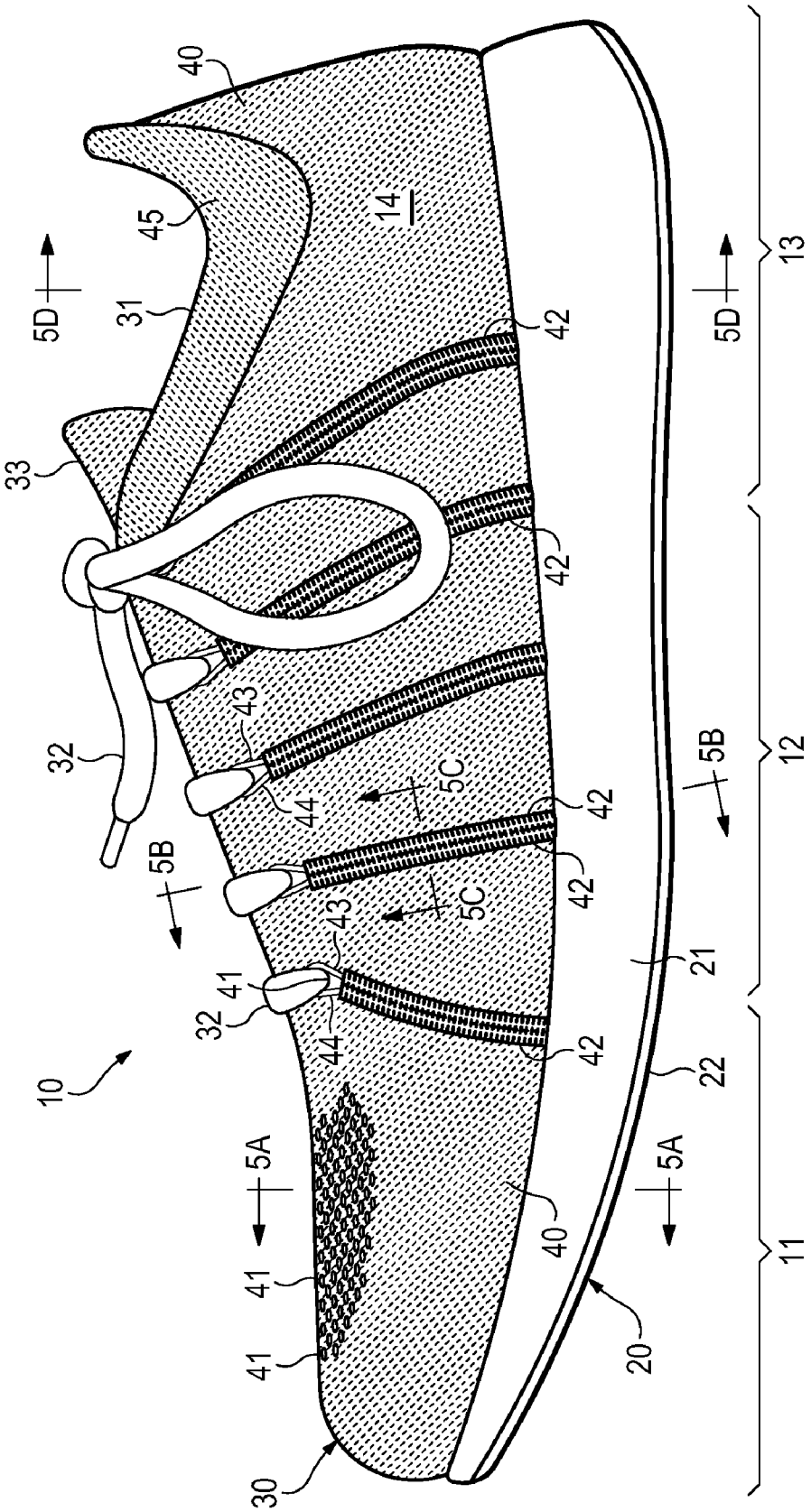

Figure 2

lululemon Ex. 1010
IPR Petition - USP 9,375,046

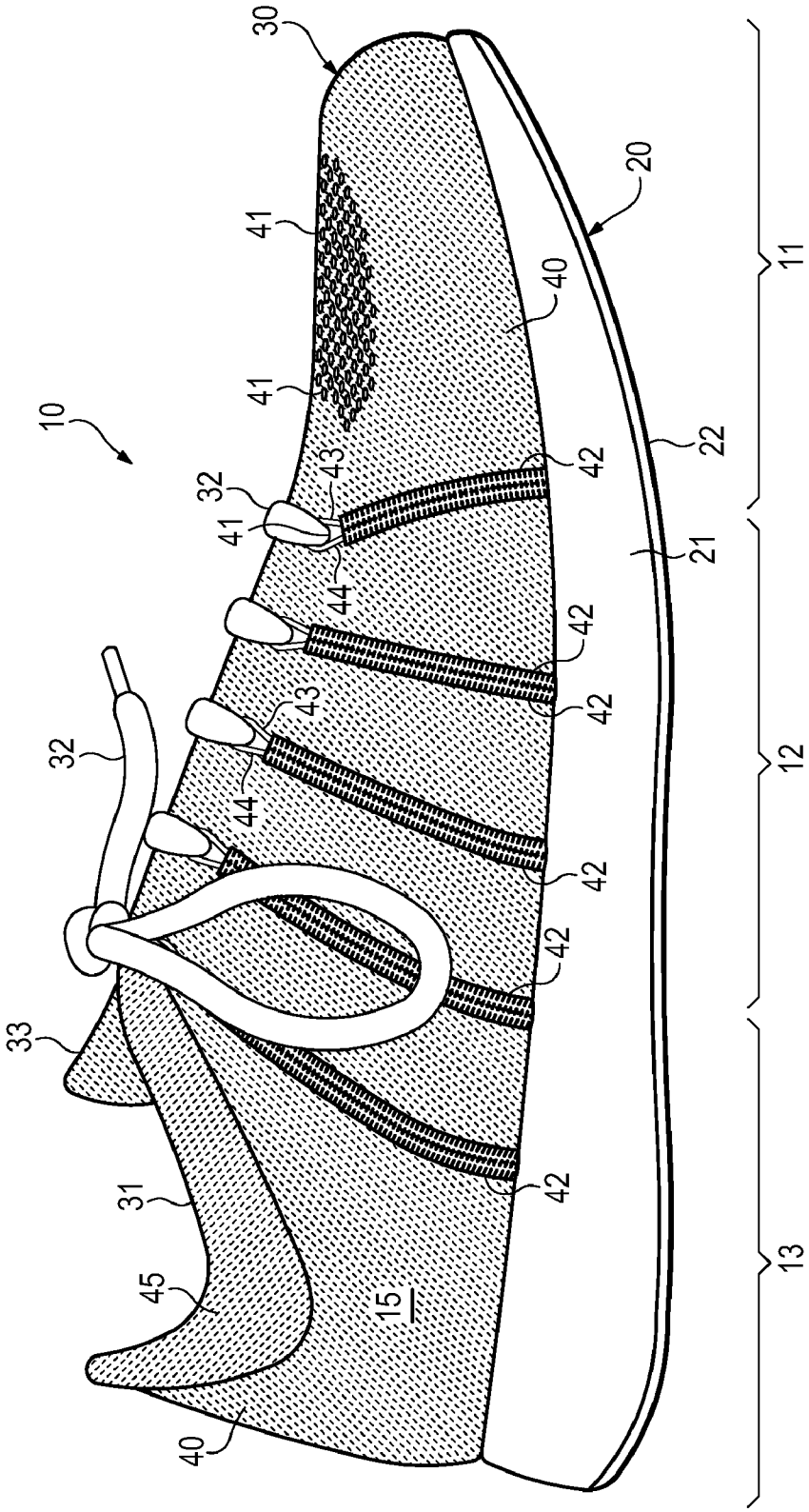

Figure 3

lululemon Ex. 1010
IPR Petition - USP 9,375,046

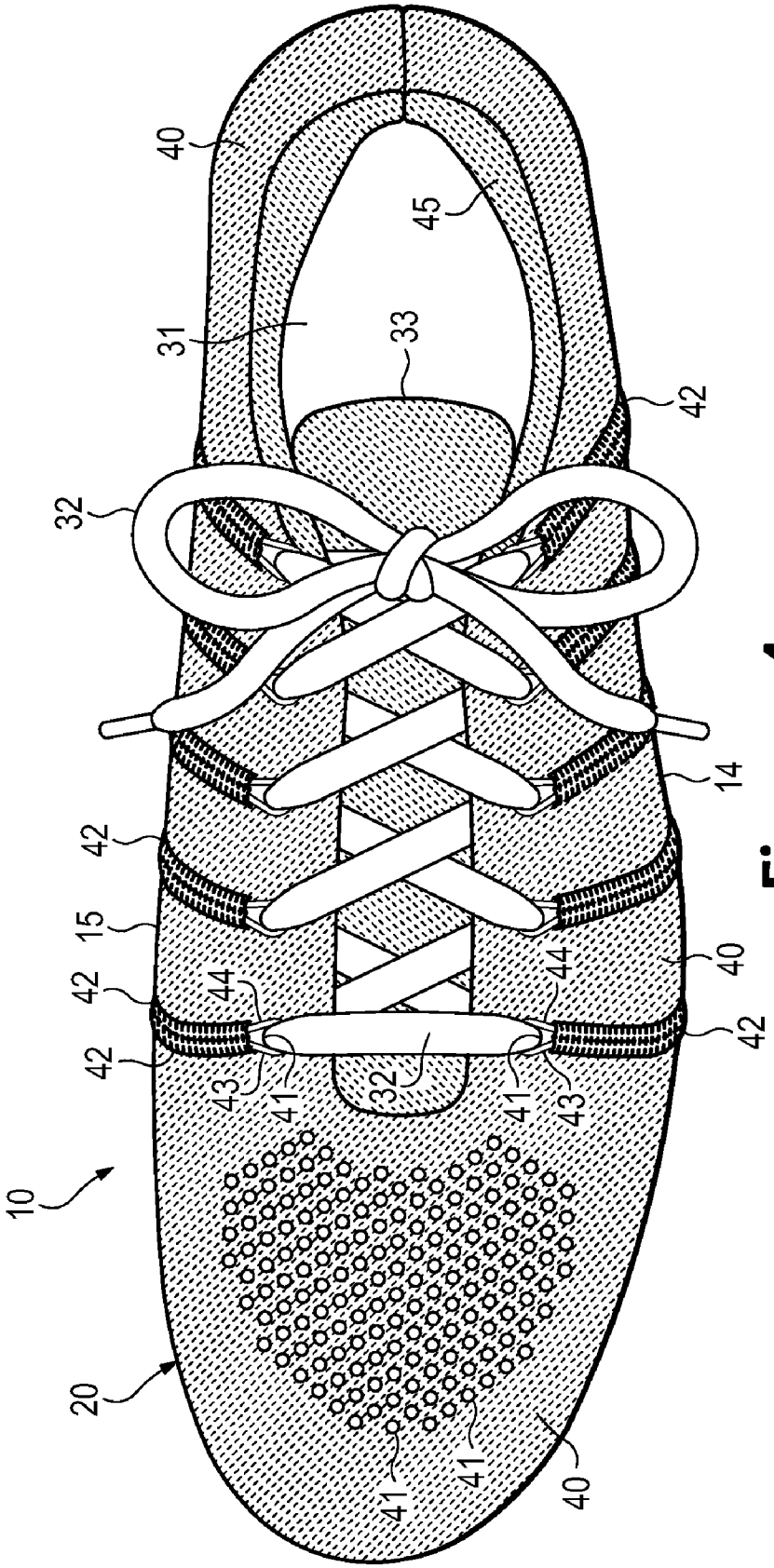

Figure 4

lululemon Ex. 1010
IPR Petition - USP 9,375,046

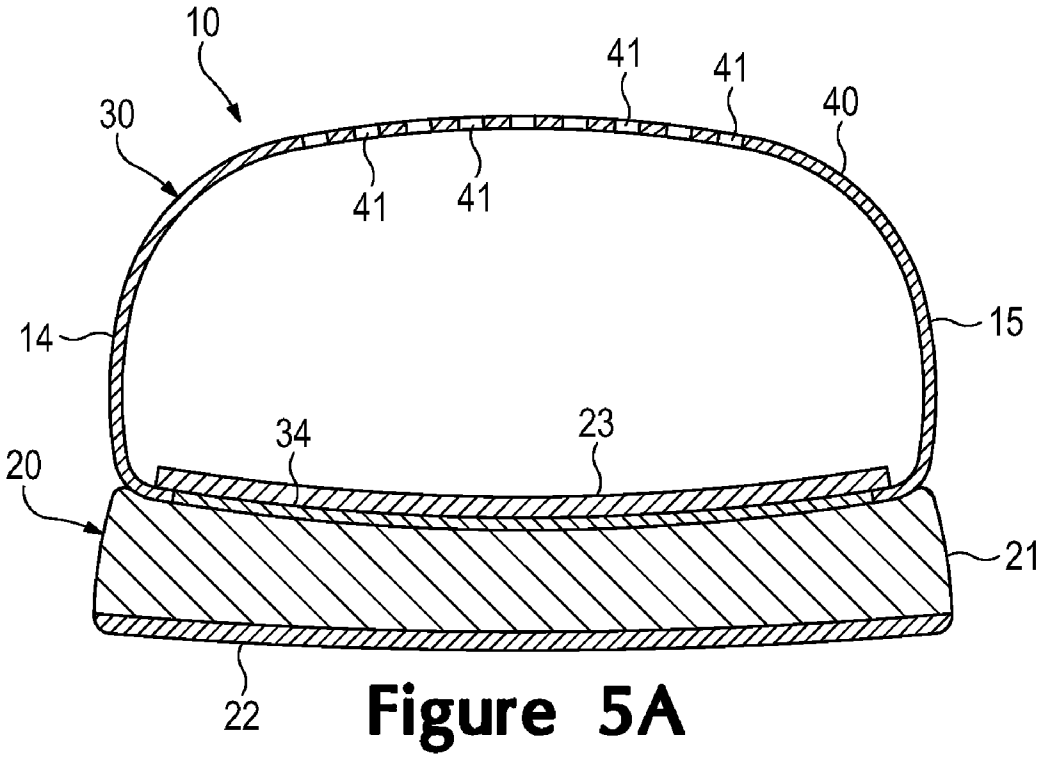

Figure 5A

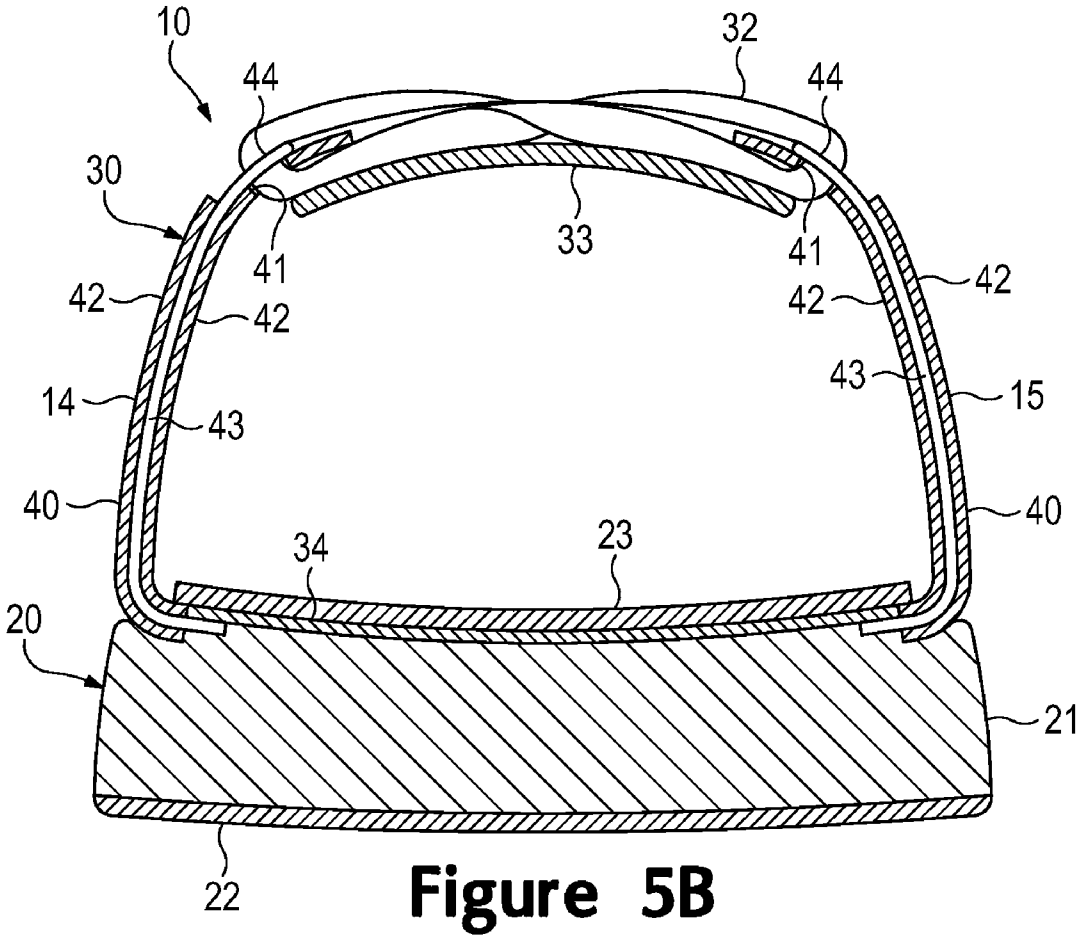

Figure 5B

lululemon Ex. 1010
IPR Petition - USP 9,375,046

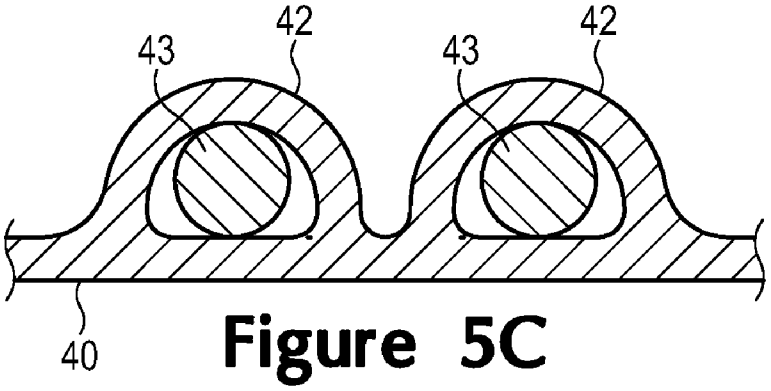

Figure 5C

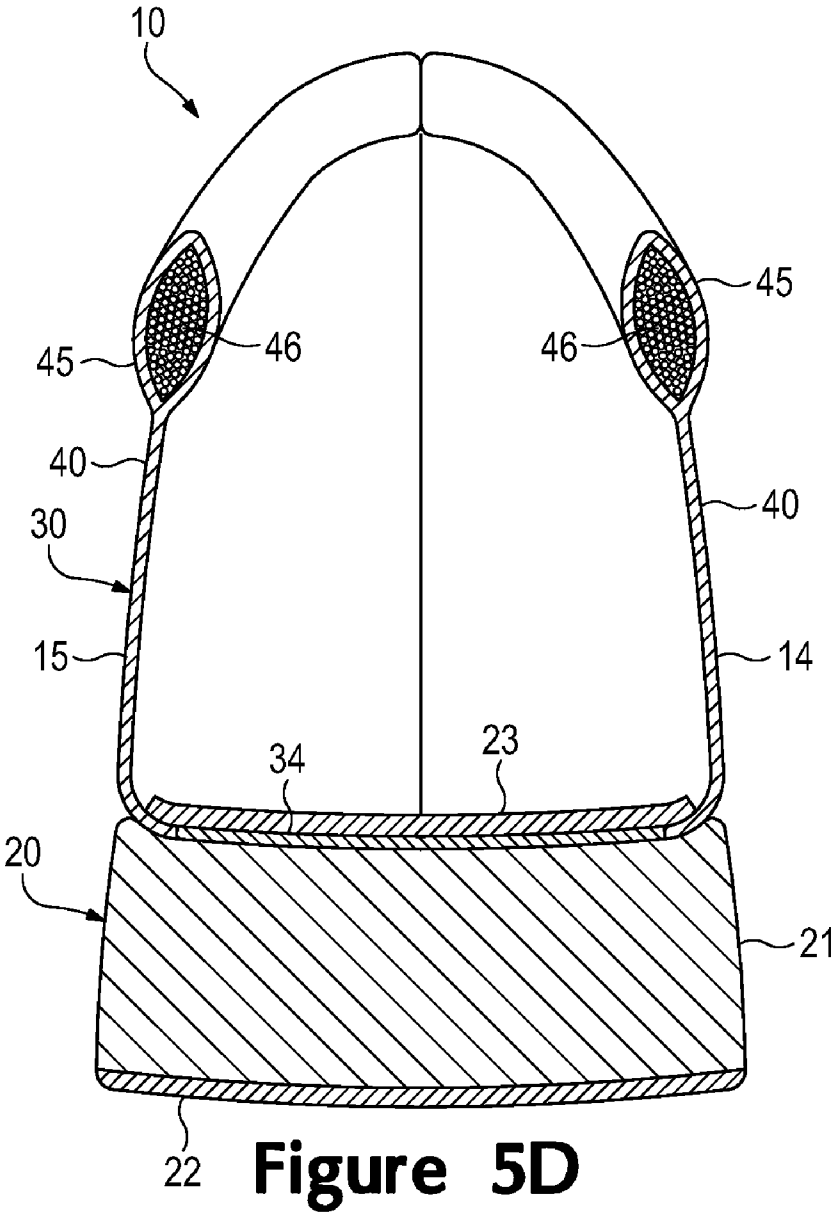

Figure 5D

lululemon Ex. 1010
IPR Petition - USP 9,375,046

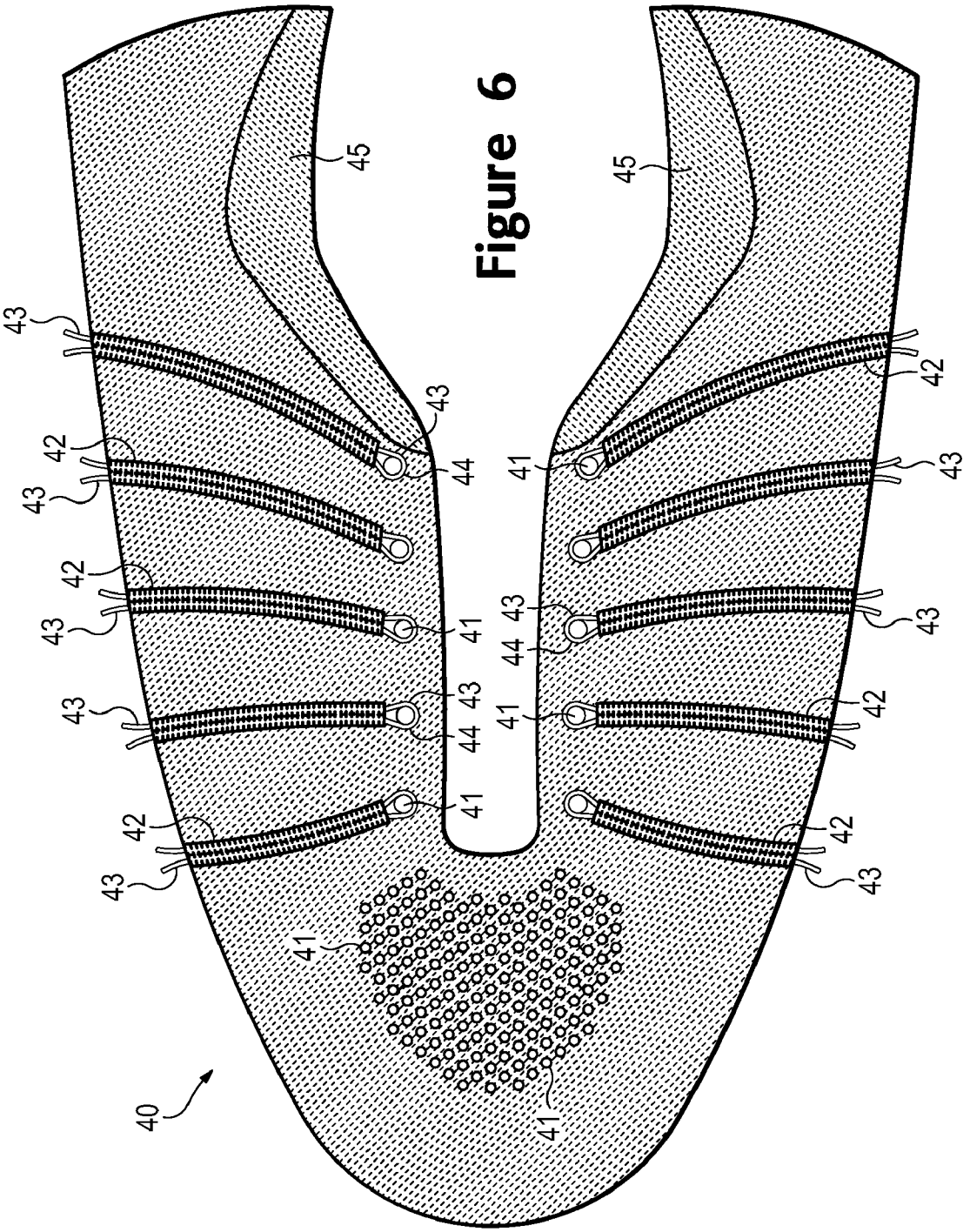

Figure 6

lululemon Ex. 1010
IPR Petition - USP 9,375,046

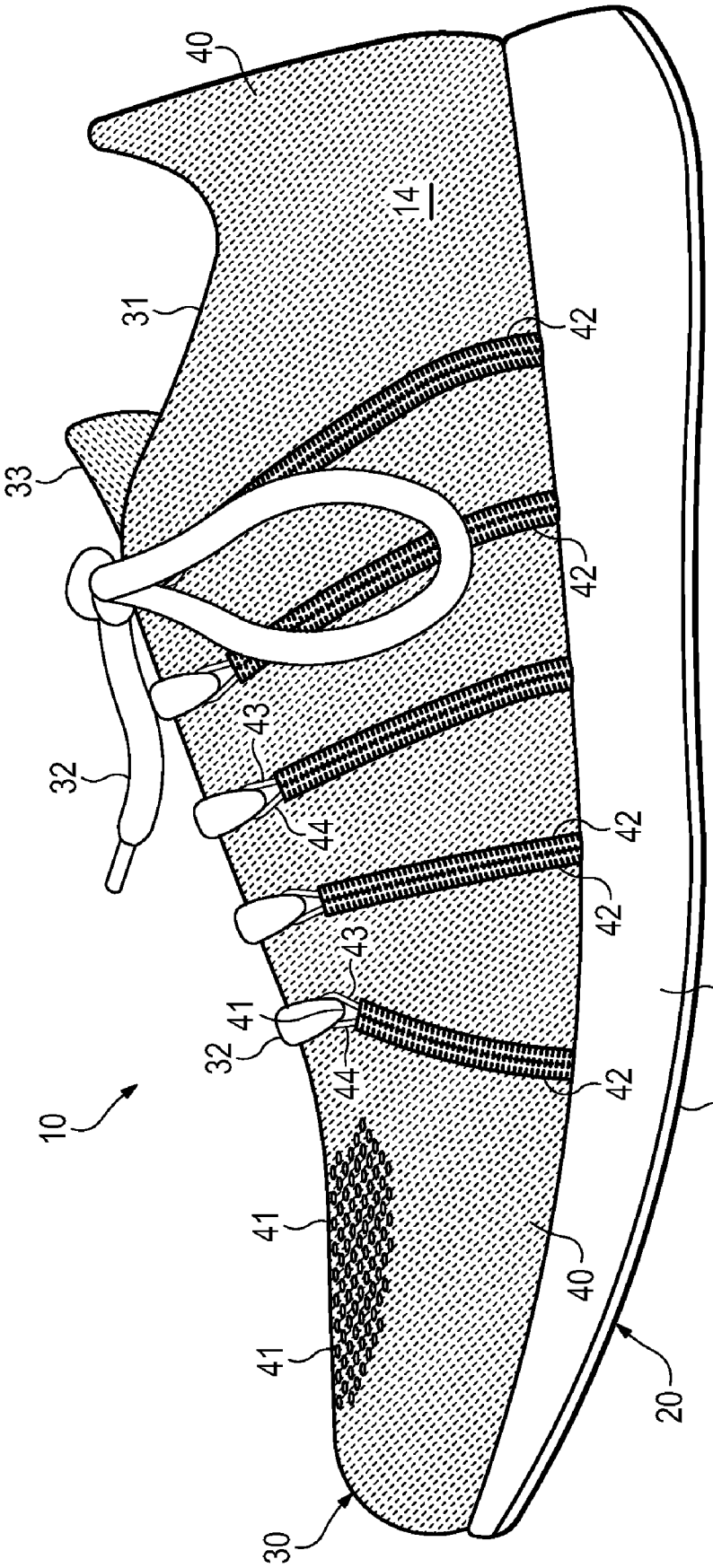

Figure 7A

lululemon Ex. 1010
IPR Petition - USP 9,375,046

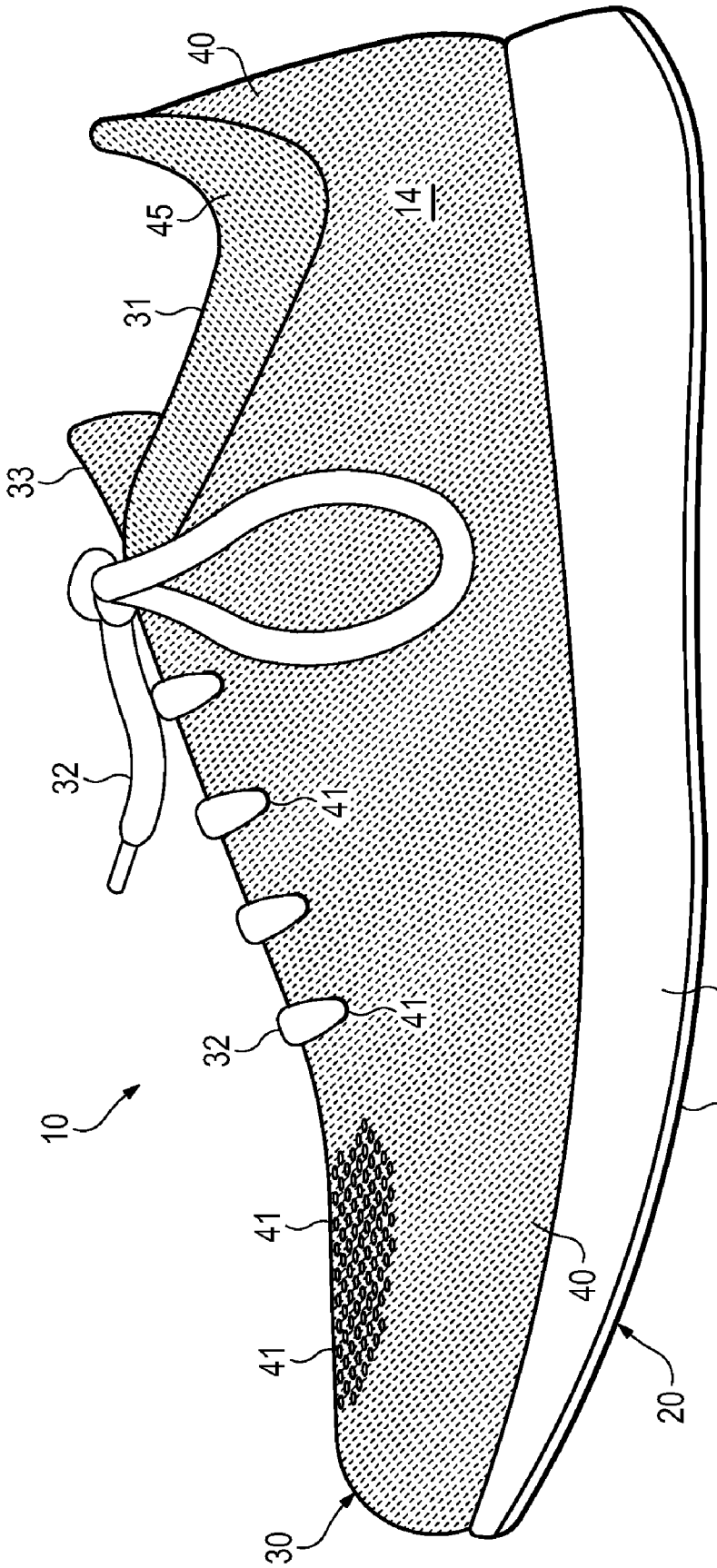

Figure 7B

lululemon Ex. 1010
IPR Petition - USP 9,375,046

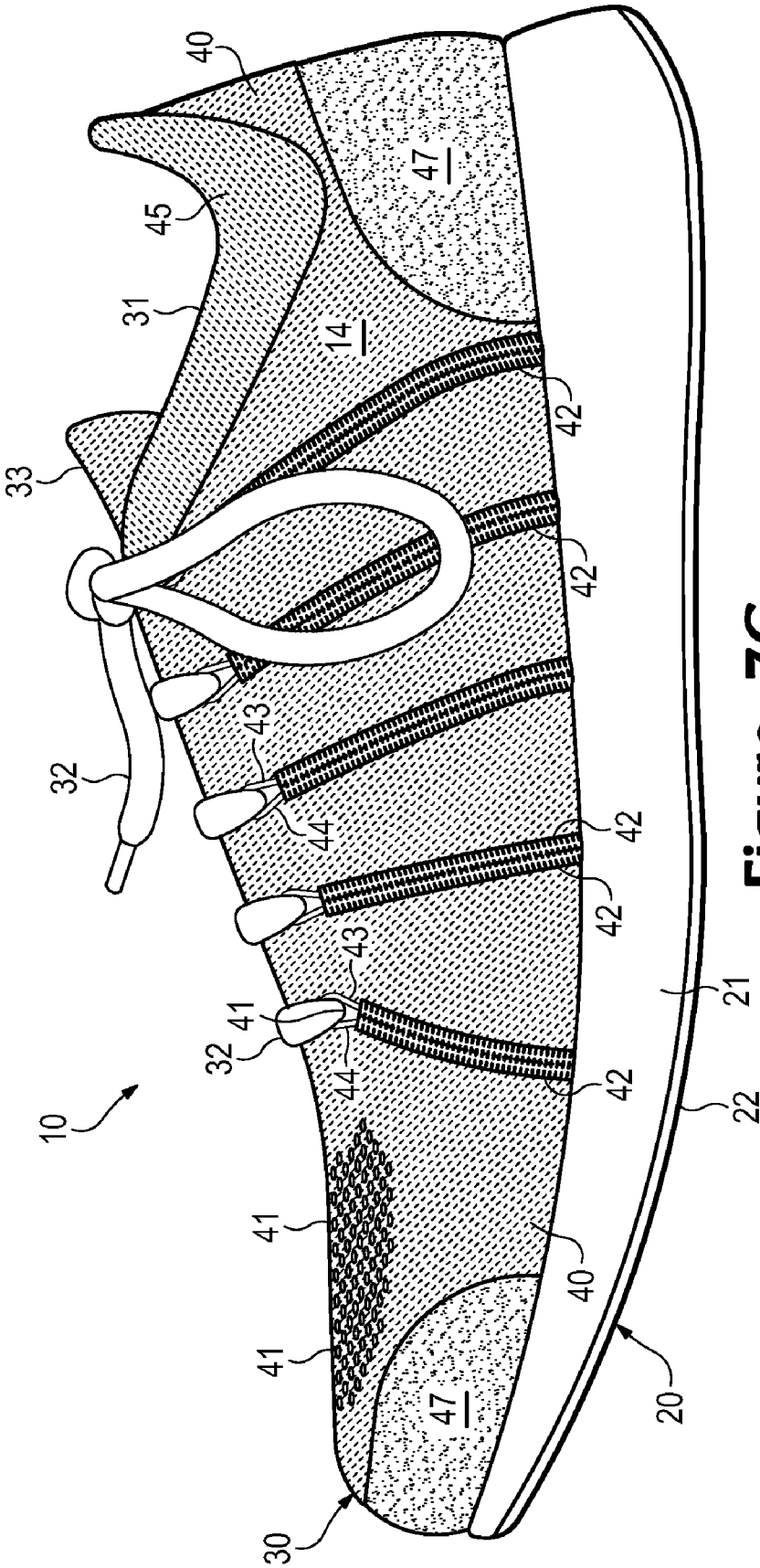

Figure 7C

lululemon Ex. 1010
IPR Petition - USP 9,375,046

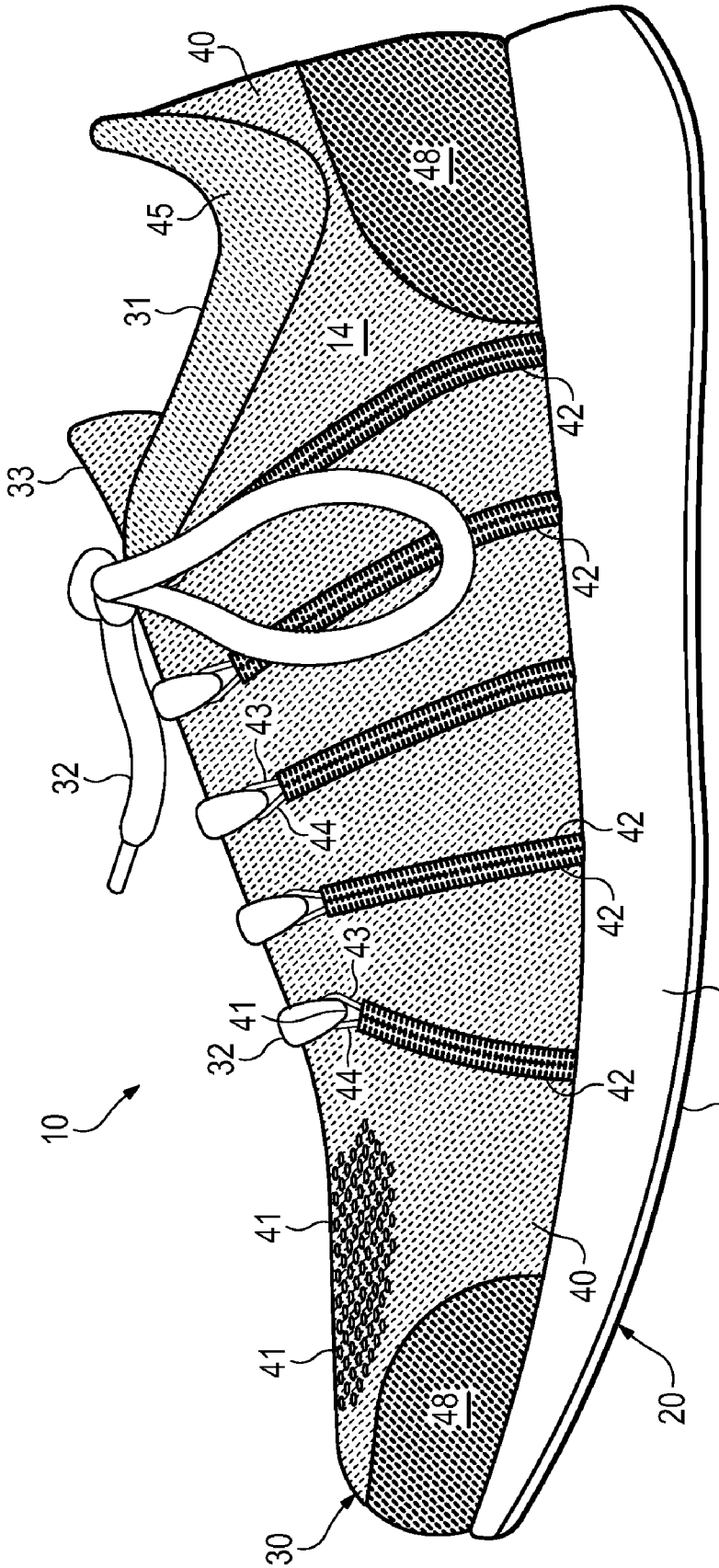

Figure 7D

lululemon Ex. 1010
IPR Petition - USP 9,375,046

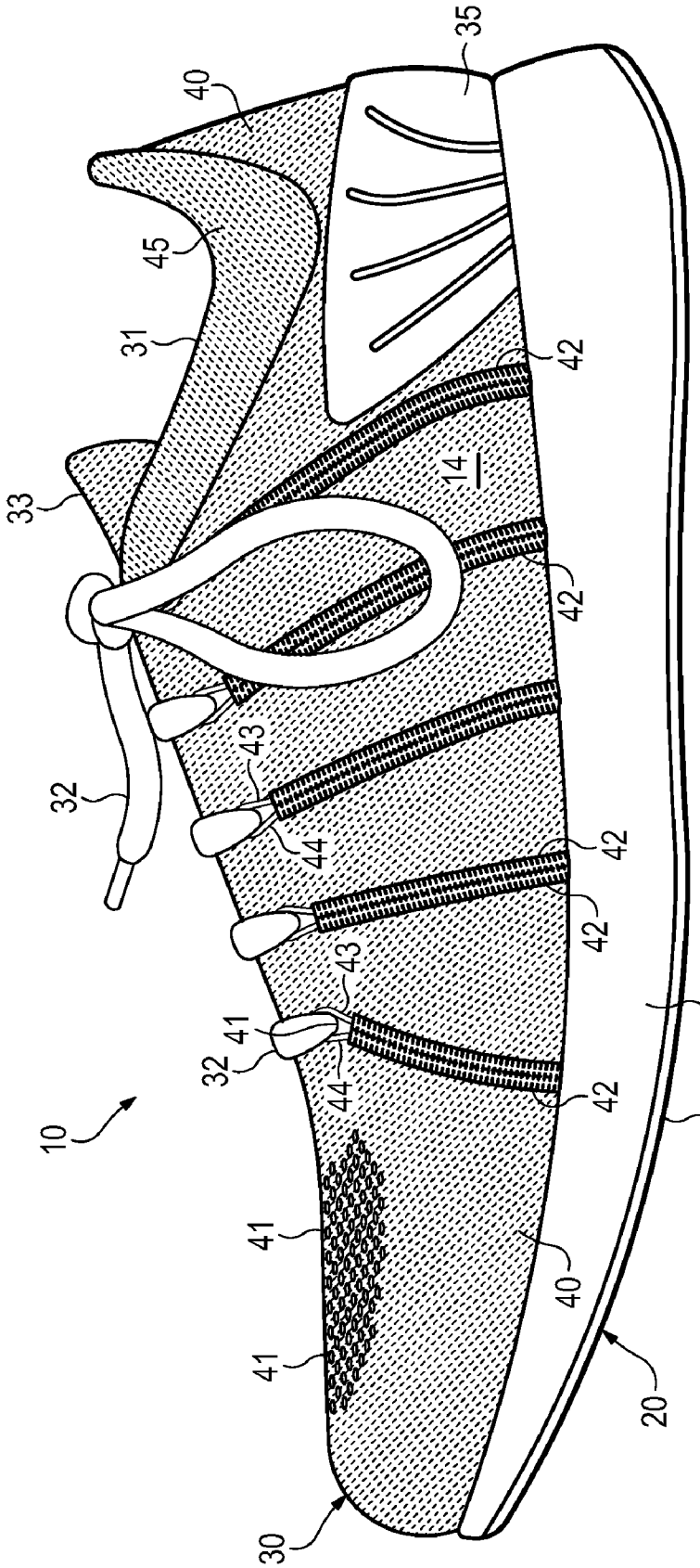

Figure 7E

lululemon Ex. 1010
IPR Petition - USP 9,375,046

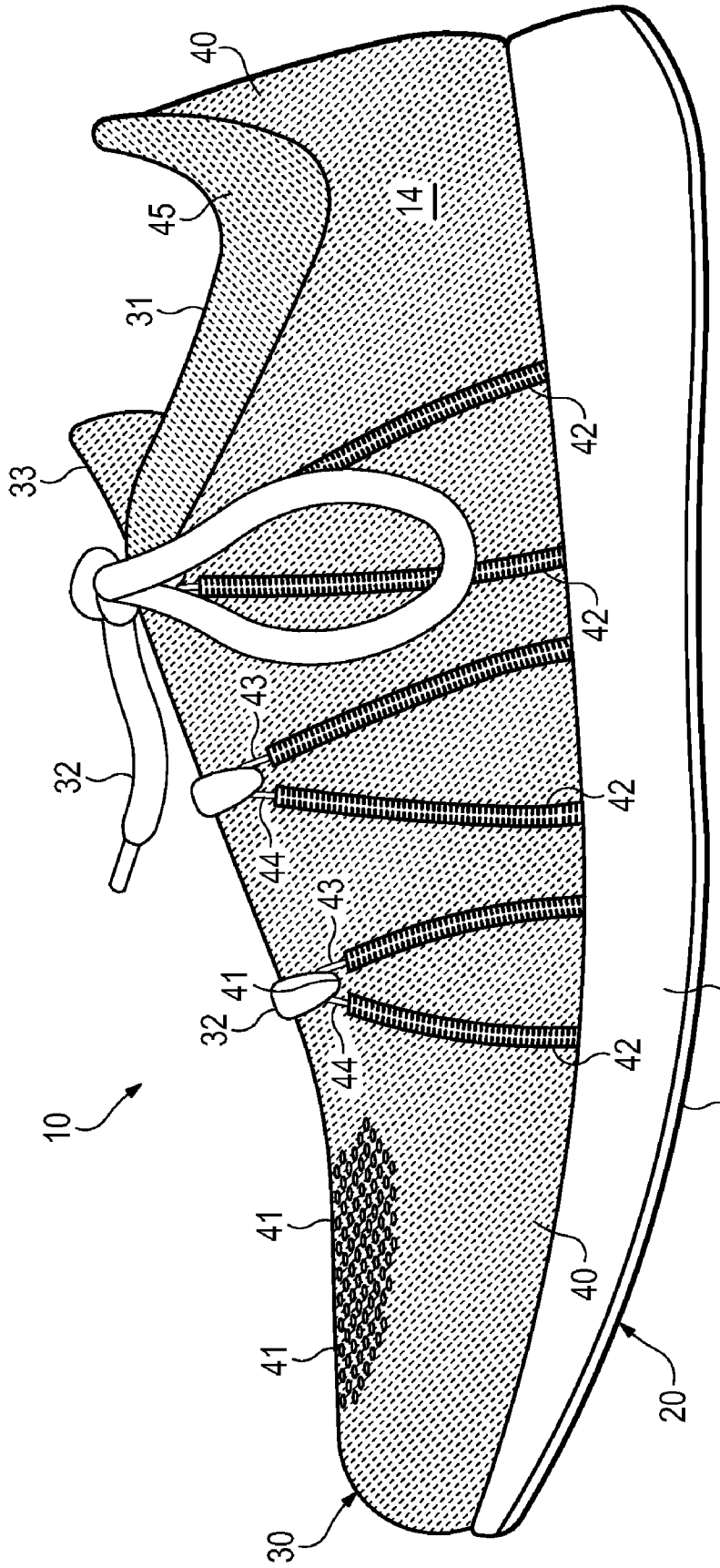

Figure 7F

lululemon Ex. 1010
IPR Petition - USP 9,375,046

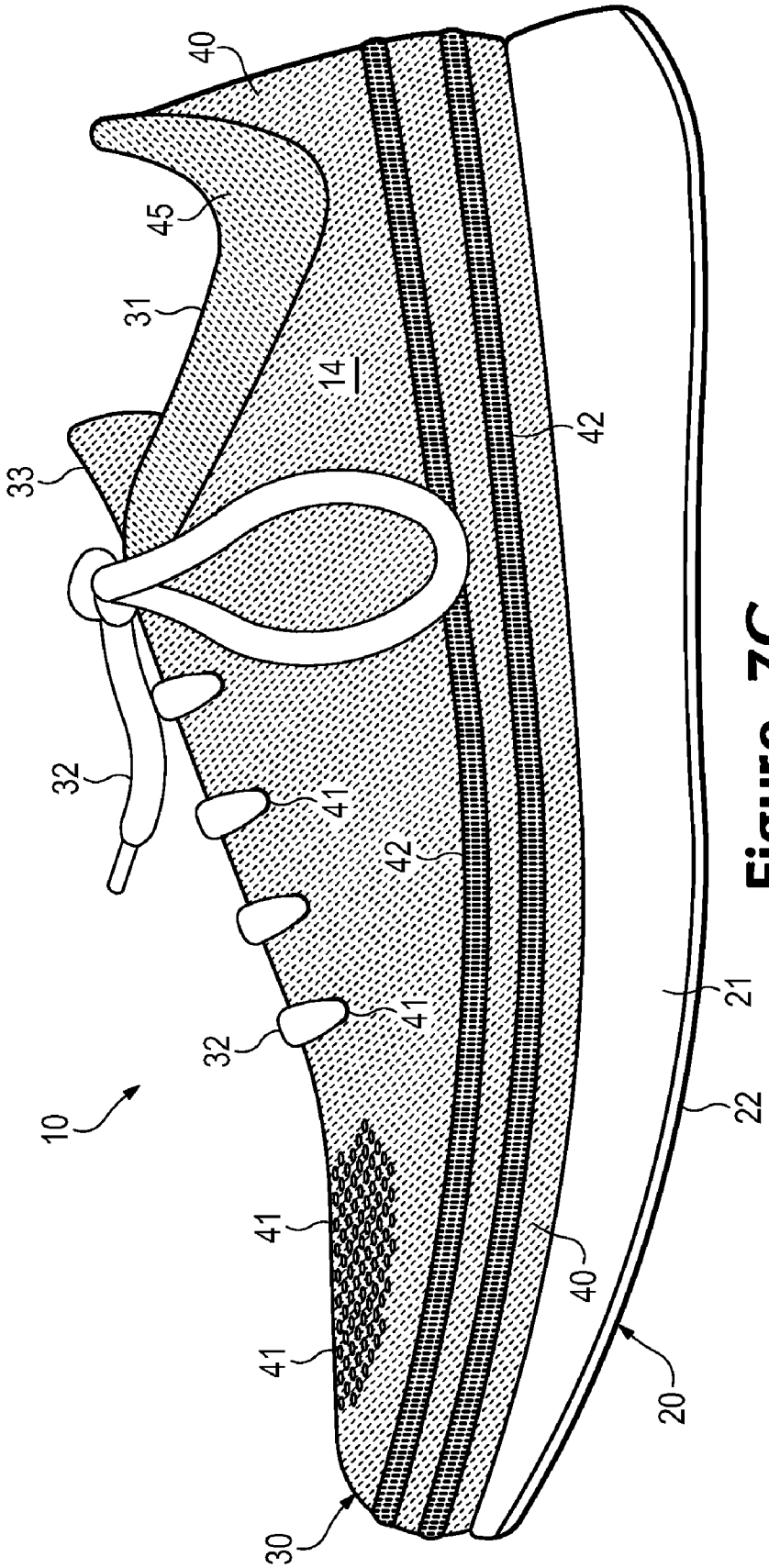

Figure 7G

lululemon Ex. 1010
IPR Petition - USP 9,375,046

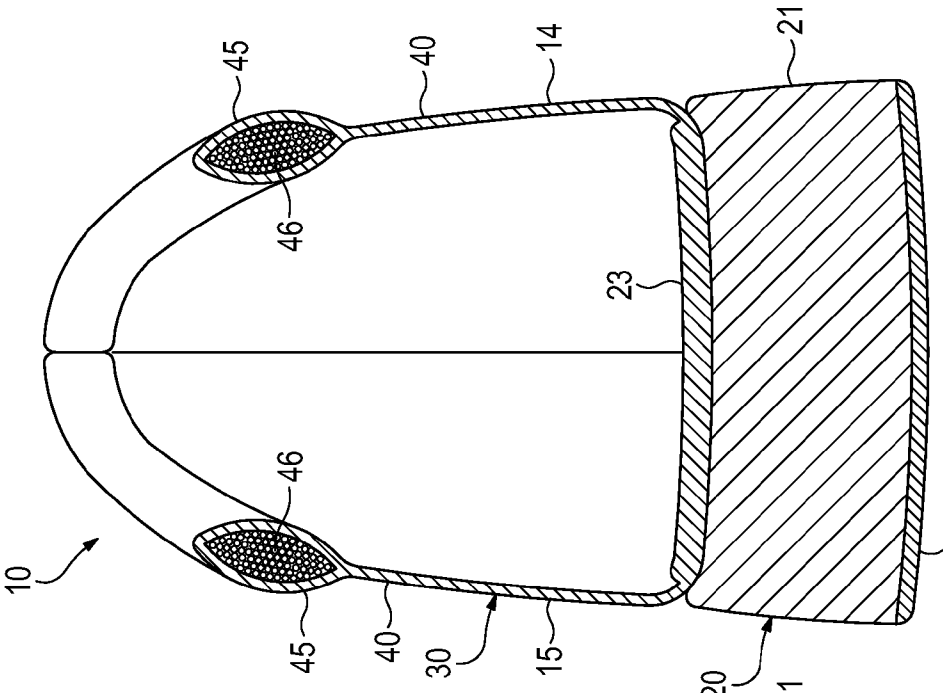

Figure 8B

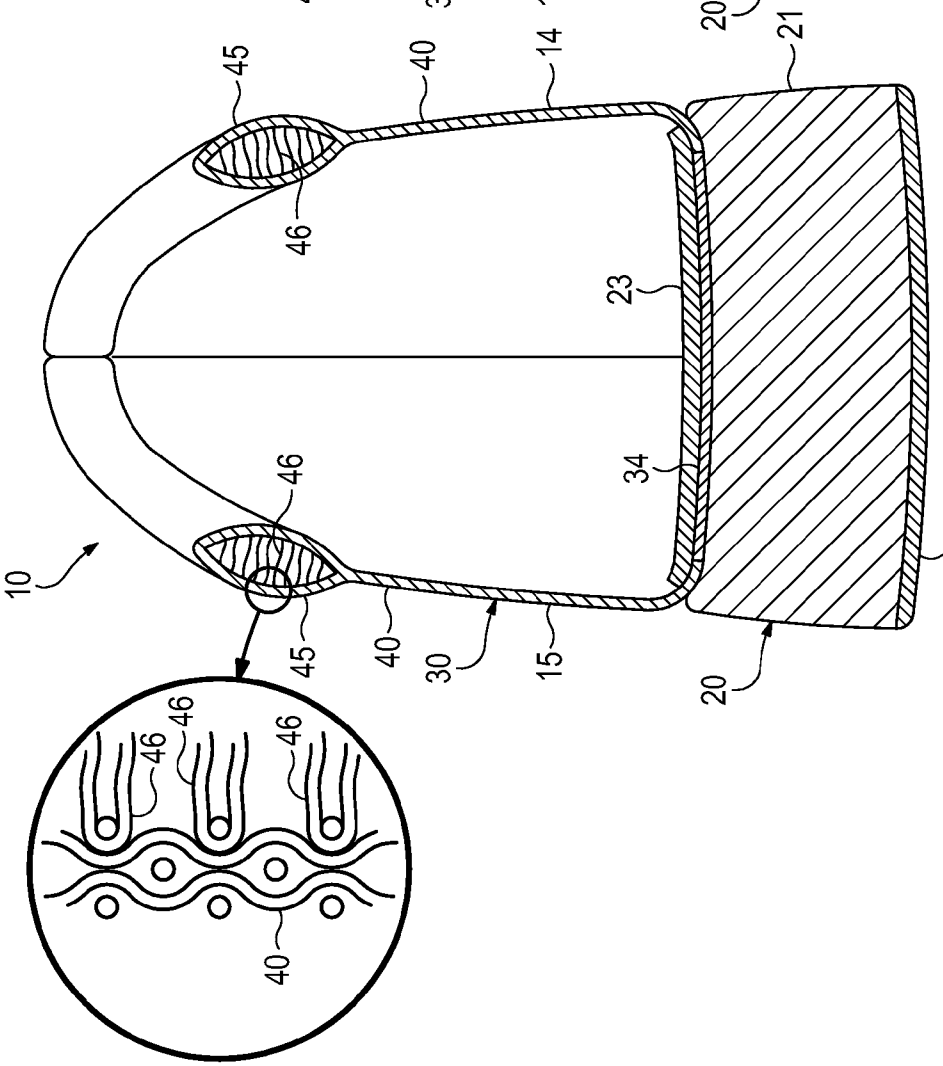

Figure 8A

lululemon Ex. 1010
IPR Petition - USP 9,375,046

ARTICLE OF FOOTWEAR HAVING AN UPPER INCORPORATING A KNITTED COMPONENT

BACKGROUND

[0001] Conventional articles of footwear generally include two primary elements, an upper and a sole structure. The upper is secured to the sole structure and forms a void on the interior of the footwear for comfortably and securely receiving a foot. The sole structure is secured to a lower surface of the upper so as to be positioned between the upper and the ground. In some articles of athletic footwear, for example, the sole structure may include a midsole and an outsole. The midsole may be formed from a polymer foam material that attenuates ground reaction forces to lessen stresses upon the foot and leg during walking, running, and other ambulatory activities. The outsole is secured to a lower surface of the midsole and forms a ground-engaging portion of the sole structure that is formed from a durable and wear-resistant material. The sole structure may also include a sockliner positioned within the void and proximal a lower surface of the foot to enhance footwear comfort.

[0002] The upper generally extends over the instep and toe areas of the foot, along the medial and lateral sides of the foot, and around the heel area of the foot. In some articles of footwear, such as basketball footwear and boots, the upper may extend upward and around the ankle to provide support or protection for the ankle. Access to the void on the interior of the upper is generally provided by an ankle opening in a heel region of the footwear. A lacing system is often incorporated into the upper to adjust the fit of the upper, thereby permitting entry and removal of the foot from the void within the upper. The lacing system also permits the wearer to modify certain dimensions of the upper, particularly girth, to accommodate feet with varying dimensions. In addition, the upper may include a tongue that extends under the lacing system to enhance adjustability of the footwear, and the upper may incorporate a heel counter to limit movement of the heel.

[0003] Various materials are conventionally utilized in manufacturing the upper. The upper of athletic footwear, for example, may be formed from multiple material elements. The materials may be selected based upon various properties, including stretch-resistance, wear-resistance, flexibility, air-permeability, compressibility, and moisture-wicking, for example. With regard to an exterior of the upper, the toe area and the heel area may be formed of leather, synthetic leather, or a rubber material to impart a relatively high degree of wear-resistance. Leather, synthetic leather, and rubber materials may not exhibit the desired degree of flexibility and air-permeability for various other areas of the exterior. Accordingly, the other areas of the exterior may be formed from a synthetic textile, for example. The exterior of the upper may be formed, therefore, from numerous material elements that each impart different properties to the upper. An intermediate or central layer of the upper may be formed from a lightweight polymer foam material that provides cushioning and enhances comfort. Similarly, an interior of the upper may be formed of a comfortable and moisture-wicking textile that removes perspiration from the area immediately surrounding the foot. The various material elements and other components may be joined with an adhesive or stitching. Accordingly, the conventional upper is formed from various material elements that each impart different properties to various areas of the footwear.

SUMMARY

[0004] A flat knitting process or a variety of other knitting processes may be utilized to form a knitted component for an upper of an article of footwear. Various features may be incorporated into the knitted component. For example, the knitted component may define a tube formed of unitary knit construction, and a strand may extend through a length of the tube. As another example, the knitted component may have a pair of at least partially coextensive knitted layers formed of unitary knit construction, and a plurality of floating yarns may extend between the knitted layers. In some configurations, the knit type or yarn type may vary in different regions of the knitted component to impart different properties. Additionally, the knitted component may incorporate a thermoplastic yarn that is fused in different regions of the knitted component to impart different properties.

[0005] The advantages and features of novelty characterizing aspects of the invention are pointed out with particularity in the appended claims. To gain an improved understanding of the advantages and features of novelty, however, reference may be made to the following descriptive matter and accompanying figures that describe and illustrate various configurations and concepts related to the invention.

FIGURE DESCRIPTIONS

[0006] The foregoing Summary and the following Detailed Description will be better understood when read in conjunction with the accompanying figures.

[0007] FIG. **1** is a perspective view of an article of footwear.

[0008] FIG. **2** is a lateral side elevational view of an article of footwear.

[0009] FIG. **3** is a medial side elevational view of the article of footwear.

[0010] FIG. **4** is a top plan view of the article of footwear.

[0011] FIGS. **5**A-**5**D are cross-sectional views of the article of footwear, as respectively defined by section lines **5**A-**5**D in FIG. **2**.

[0012] FIG. **6** is a top plan view of a knitted component that forms a portion of an upper of the article of footwear.

[0013] FIGS. **7**A-**7**G are side elevational views corresponding with FIG. **2** and depicting further configurations of the article of footwear.

[0014] FIGS. **8**A and **8**B are cross-sectional views corresponding with FIG. **5**D and depicting further configurations of the article of footwear.

DETAILED DESCRIPTION

[0015] The following discussion and accompanying figures disclose an article of footwear having an upper that includes a knitted component. The article of footwear is disclosed as having a general configuration suitable for walking or running. Concepts associated with the footwear, including the upper, may also be applied to a variety of other athletic footwear types, including baseball shoes, basketball shoes, cross-training shoes, cycling shoes, football shoes, tennis shoes, soccer shoes, and hiking boots, for example. The concepts may also be applied to footwear types that are generally considered to be non-athletic, including dress shoes, loafers,

lululemon Ex. 1010
IPR Petition - USP 9,375,046

sandals, and work boots. The concepts disclosed herein apply, therefore, to a wide variety of footwear types.

[0016] General Footwear Structure

[0017] An article of footwear **10** is depicted in FIGS. **1-5**D as including a sole structure **20** and an upper **30**. For reference purposes, footwear **10** may be divided into three general regions: a forefoot region **11**, a midfoot region **12**, and a heel region **13**, as shown in FIGS. **2** and **3**. Footwear **10** also includes a lateral side **14** and a medial side **15**. Forefoot region **11** generally includes portions of footwear **10** corresponding with the toes and the joints connecting the metatarsals with the phalanges. Midfoot region **12** generally includes portions of footwear **10** corresponding with the arch area of the foot, and heel region **13** corresponds with rear portions of the foot, including the calcaneus bone. Lateral side **14** and medial side **15** extend through each of regions **11-13** and correspond with opposite sides of footwear **10**. Regions **11-13** and sides **14-15** are not intended to demarcate precise areas of footwear **10**. Rather, regions **11-13** and sides **14-15** are intended to represent general areas of footwear **10** to aid in the following discussion. In addition to footwear **10**, regions **11-13** and sides **14-15** may also be applied to sole structure **20**, upper **30**, and individual elements thereof.

[0018] Sole structure **20** is secured to upper **30** and extends between the foot and the ground when footwear **10** is worn. The primary elements of sole structure **20** are a midsole **21**, an outsole **22**, and an sockliner **23**. Midsole **21** is secured to a lower surface of upper **30** and may be formed from a compressible polymer foam element (e.g., a polyurethane or ethylvinylacetate foam) that attenuates ground reaction forces (i.e., provides cushioning) when compressed between the foot and the ground during walking, running, or other ambulatory activities. In further configurations, midsole **21** may incorporate a fluid-filled bladder that supplements the ground reaction force attenuation properties, or midsole **21** may be primarily formed from the fluid-filled bladder. Outsole **22** is secured to a lower surface of midsole **21** and may be formed from a wear-resistant rubber material that is textured to impart traction. Sockliner **23** is located within upper **30** and is positioned to extend under a lower surface of the foot. Although this configuration for sole structure **20** provides an example of a sole structure that may be used in connection with upper **30**, a variety of other conventional or nonconventional configurations for sole structure **20** may also be utilized. Accordingly, the structure and features of sole structure **20** or any sole structure utilized with upper **30** may vary considerably.

[0019] Upper **30** defines a void within footwear **10** for receiving and securing a foot relative to sole structure **20**. The void is shaped to accommodate the foot and extends along the lateral side of the foot, along the medial side of the foot, over the foot, around the heel, and under the foot. Access to the void is provided by an ankle opening **31** located in at least heel region **13**. A lace **32** extends through portions of upper **30**, as described in greater detail below, and permits the wearer to modify dimensions of upper **30** to accommodate the proportions of the foot. More particularly, lace **32** permits the wearer to tighten upper **30** around the foot, and lace **32** permits the wearer to loosen upper **30** to facilitate entry and removal of the foot from the void (i.e., through ankle opening **31**). In addition, upper **30** includes a tongue **33** that extends under lace **32**.

[0020] A majority of upper **30** is formed from a knitted component **40** that may, for example, be manufactured through a flat knitting process. Knitted component **40** extends through each of regions **11-13**, along both lateral side **14** and medial side **15**, over forefoot region **11**, and around heel region **13**. In addition, knitted component **40** forms both an interior surface and an opposite exterior surface of upper **30**. As such, knitted component **40** defines at least a portion of the void within upper **30**, and knitted component **40** also defines ankle opening **31** to provide access to the void. In some configurations, knitted component **40** may also extend under the foot. For purposes of example in the various figures, however, a strobel sock **34** is secured to knitted component **40** and forms a majority of the portion of upper **30** that extends under the foot. In this configuration, sockliner **23** extends over strobel sock **34** and forms a surface upon which the foot rests.

[0021] Knitted Component Configuration

[0022] Knitted component **40** incorporates various knit types that impart different properties to separate areas of upper **30**. As an example that is depicted in FIGS. **1**, **4**, and **5**A, knitted component **40** forms various apertures **41** that extend through upper **30** in forefoot region **11**, whereas many other areas of upper **30** have a more continuous or less-apertured configuration. In addition to imparting greater permeability, which allows air to circulate within upper **30**, apertures **41** may increase both the flexibility and stretch of upper **30** in forefoot region **11**. As further examples, other properties that may be varied through selecting particular knit types for a particular area of knitted component **40** include permeability to liquids, the directions in which knitted component **40** stretches or resists stretch, the stiffness of knitted component **40**, and the compressibility of knitted component **40**. Additional examples of knitted components for footwear uppers that have areas with different knit types to impart different properties may be found in U.S. Pat. No. 6,931,762 to Dua and U.S. Pat. No. 7,347,011 to Dua, et al., both of which are entirely incorporated herein by reference. As a related matter, the density of the knit within knitted component **40** may vary among separate areas of upper **30** to, for example, make less-permeable or stiffer portions. Accordingly, knitted component **40** may exhibit various properties in separate areas depending upon the particular knit type that is selected for the areas.

[0023] Knitted component **40** may also incorporate various yarn types that impart different properties to separate areas of upper **30**. Moreover, by combining various yarn types with various stitch types, knitted component **40** may impart a range of different properties to separate areas of upper **30**. The properties that a particular type of yarn will impart to an area of knitted component **40** partially depend upon the materials that form the various filaments and fibers within the yarn. Cotton, for example, provides a soft hand, natural aesthetics, and biodegradability. Elastane and stretch polyester each provide substantial stretch and recoverability, with stretch polyester also providing recycleability. Rayon provides high luster and moisture absorption. Wool also provides high moisture absorption, in addition to insulating properties. Nylon is a durable and abrasion-resistant material with high strength. Polyester is a hydrophobic material that also provides relatively high durability. In addition to materials, other aspects relating to the yarn may affect the properties of upper **30**. For example, the yarn may be a monofilament yarn or a multifilament yarn. The yarn may also include separate filaments that are each formed of different materials. The yarn may also include filaments that are each formed of two or

lululemon Ex. 1010
IPR Petition - USP 9,375,046

more different materials, such as a bicomponent yarn with filaments having a sheath-core configuration or two halves formed of different materials. Different degrees of twist and crimping, as well as different deniers, may affect the properties of upper **30** where the yarn is located. Accordingly, both the materials forming the yarn and other aspects of the yarn may be selected to impart a variety of properties to separate areas of upper **30**.

[0024] In addition to knit types and yarn types, knitted component **40** may incorporate various knitted structures. Referring to FIGS. **2** and **3**, for example, knitted component **40** includes various tubes **42** in which strands **43** are located. Tubes **42** are generally hollow structures formed by two overlapping and at least partially coextensive layers of knitted material, as depicted in FIGS. **5**B and **5**C. Although the sides or edges of one layer of the knitted material forming tubes **42** may be secured to the other layer, a central area is generally unsecured such that another element (e.g., strands **43**) may be located between the two layers of knitted material and pass through tubes **42**. An additional example of knitted components for footwear uppers that have overlapping or at least partially coextensive layers may be found in U.S. Patent Application Publication 2008/0110048 to Dua, et al., which is incorporated herein by reference.

[0025] Tubes **42** extend upward along lateral side **14** and medial side **15**. Each tube **42** is adjacent to at least one other tube **42** to form a tube pair. In general, one of strands **43** passes through a first tube **42** of a tube pair, extends outward from an upper end of the first tube **42**, forms a loop **44** on the exterior of upper **30**, extends into an upper end of a second tube **42** of the tube pair, and passes through the second tube **42**. That is, each strand **43** passes through at least two tubes **42**, and an exposed portion of the strand **43** forms a loop **44**.

[0026] An individual strand **43** may only pass through two adjacent tubes **42** (i.e., a single tube pair) such that the strand **43** forms a single loop **44**. In this configuration, end portions of the strand **43** exit lower ends of the two adjacent tubes **42** and may be secured to sole structure **20** under strobel sock **34**, for example, to prevent the end portions from being pulled through one of tubes **42**. In another configuration, an individual strand **43** may pass through each of tubes **42**, thereby passing through multiple tube pairs and forming multiple loops **44**. In yet another configuration, one strand **43** may pass through each of tubes **42** located on lateral side **14**, and another strand **43** may pass through each of tubes **42** located on medial side **15**. In general, therefore, an individual strand **43** passes through at least one tube pair to form at least one loop **44**, but may pass through multiple tube pairs to form multiple loops **44**.

[0027] Referring to FIGS. **1-4**, lace **32** extends through each of loops **44** and also passes through various apertures **41** that are formed in knitted component **40** adjacent to each of loops **44**. The combination of lace **32**, the apertures **41** through which lace **32** extends, the various tubes **42** on both lateral side **14** and medial side **15**, strands **43**, and loops **44** provide an effective lacing system for upper **30**. When lace **32** is placed in tension (i.e., when the wearer is tying lace **32**), tension may also be induced in strands **43**. In the absence of strands **43**, other portions of knitted component **40** would bear the tension and resulting stresses from tying lace **32**. The presence of strands **43**, however, provides a separate element to bear the tension and stresses. Moreover, a majority of knitted component **40** may be generally formed through selection of knit type and yarn type to stretch when placed in tension, thereby allowing upper **30** to conform with the contours of the foot. Strands **43**, however, may be generally non-stretch in comparison with upper **30**.

[0028] Strands **43** may be formed from a variety of materials and may have the configurations of a rope, thread, webbing, cable, yarn, filament, or chain, for example. In some configurations, strands are located within tubes **42** during the knitting process that forms knitted component **40**. As such, strands **43** may be formed from any generally one-dimensional material that may be utilized in a knitting machine or other device that forms knitted component **40**. As utilized with respect to the present invention, the term "one-dimensional material" or variants thereof is intended to encompass generally elongate materials exhibiting a length that is substantially greater than a width and a thickness. Accordingly, suitable materials for strands **43** include various filaments, fibers, and yarns, that are formed from rayon, nylon, polyester, polyacrylic, silk, cotton, carbon, glass, aramids (e.g., para-aramid fibers and meta-aramid fibers), ultra high molecular weight polyethylene, and liquid crystal polymer. In addition to filaments and yarns, other one-dimensional materials may be utilized for strands **43**. Although one-dimensional materials will often have a cross-section where width and thickness are substantially equal (e.g., a round or square cross-section), some one-dimensional materials may have a width that is somewhat greater than a thickness (e.g., a rectangular, oval, or otherwise elongate cross-section). Despite the greater width, a material may be considered one-dimensional if a length of the material is substantially greater than a width and a thickness of the material.

[0029] Another structure formed by knitted component **40** is a padded collar **45** that extends at least partially around ankle opening **31**. Referring to FIGS. **1-3**, collar **45** exhibits a greater thickness than many other portions of knitted component **40**. In general, collar **45** is formed by two overlapping and at least partially coextensive layers of knitted material (i.e., a tubular structure) and a plurality of floating yarns **46** extending between the layers, as depicted in FIG. **5**D. Although the sides or edges of one layer of knitted material forming collar **45** may be secured to the other layer of knitted material, a central area is generally unsecured. As such, the layers of knitted material effectively form a tube or tubular structure similar to tubes **42**, and floating yarns **46** may be located or laid-in between the two layers of knitted material to pass through the tubes. That is, floating yarns **46** extend between the layers of knitted material, are generally parallel to surfaces of the knitted material, and also pass through and fill an interior volume between the layers. Whereas a majority of knitted component **40** is formed from yarns that are mechanically-manipulated to form a knitted component, floating yarns **46** are generally free or otherwise laid-in within the interior volume between the layers of knitted material forming the exterior of collar **45**.

[0030] Whereas tubes **42** include a single strand **43**, collar **45** includes a plurality of floating yarns **46** that extend through the area between the layers of knitted material. Accordingly, knitted component **40** may form generally tubular structures having one or multiple yarns within the tubular structures. Moreover, floating yarns **46** may be formed from a variety of materials and may be located within collar **45** during the knitting process that forms knitted component **40**. As such, floating yarns **46** may be formed from any generally one-dimensional material that may be utilized in a knitting machine or other device that forms knitted component **40**.

lululemon Ex. 1010
IPR Petition - USP 9,375,046

[0031] The presence of floating yarns **46** imparts a compressible aspect to collar **45**, thereby enhancing the comfort of footwear **10** in the area of ankle opening **31**. Many conventional articles of footwear incorporate polymer foam elements or other compressible materials into a collar area. In contrast with the conventional articles of footwear, collar **45** utilizes floating yarns **46** to provide a compressible structure.

[0032] The combination of tubes **42** and strands **43** provides upper **30** with a structural element that, for example, resists stretch in a lacing system. Similarly, the combination of collar **45** and floating yarns **46** provides upper **30** with a structural element that, for example, compresses to impart greater comfort around ankle opening **31**. Although these knitted structures provide different benefits to upper **30**, these knitted structures are similar in that each includes (a) a tubular structure formed from two overlapping and at least partially coextensive layers of knitted material formed of unitary knit construction and (b) at least one yarn, strand, or other one-dimensional material that is laid-in or otherwise located within the tubular structure and extends through at least a portion of a length of the tubular structure.

[0033] Flat Knitting Process

[0034] A flat knitting process may be utilized to manufacture knitted component **40**. Flat knitting is a method for producing a knitted material that is turned periodically (i.e., the material is knitted from alternating sides). The two sides (otherwise referred to as faces) of the material are conventionally designated as the right side (i.e., the side that faces outwards, towards the viewer) and the wrong side (i.e., the side that faces inwards, away from the viewer). Although flat knitting provides a suitable manner for forming knitted component **40**, other knitting processes may also be utilized, depending upon the features that are incorporated into knitted component **40**. Examples of other knitting processes that may be utilized include wide tube circular knitting, narrow tube circular knit jacquard, single knit circular knit jacquard, double knit circular knit jacquard, warp knit tricot, warp knit raschel, and double needle bar raschel.

[0035] An advantage to utilizing a flat knitting process to manufacture knitted component **40** is that each of the features discussed above may be imparted to knitted component **40** through the flat knitting process. That is, a flat knitting process may form knitted component **40** to have, for example, (a) various knit types that impart different properties to separate areas of upper **30**, (b) various yarn types that impart different properties to separate areas of upper **30**, (c) knitted components with the configuration of overlapping knitted layers in tubes **42**, (d) a material such as strand **43** that is laid into tubes **42**, (e) knitted components with the configuration of overlapping knitted layers in collar **45**, and (f) floating yarns between layers of knitted material in collar **45**. Moreover, each of these features, as well as other features, may be incorporated into knitted component **40** through a single flat knitting process. As such, a flat knitting process may be utilized to substantially form upper **30** to have various properties and structural features that are advantageous to footwear **10**.

[0036] Although one or more yarns may be mechanically-manipulated by an individual to form knitted component **40** (i.e., knitted component **40** may be formed by hand), flat-knitting machines may provide an efficient manner of forming relatively large numbers of knitted component **40**. The flat-knitting machines may also be utilized to vary the dimensions of knitted component **40** to form uppers **30** that are suitable for footwear with different sizes based on one or both of the length and width of a foot. Additionally, the flat-knitting machines may be utilized to vary the configuration of knitted component **40** to form uppers **30** that are suitable for both left and right feet. Various aspects of knitted component **40** may also be varied to provide a custom fit for individuals. Accordingly, the use of mechanical flat-knitting machines may provide an efficient manner of forming multiple knitted components **40** having different sizes and configurations.

[0037] Knitted component **40** incorporates various features and structures formed of unitary knit construction. In general, the features and structures are formed of unitary knit construction when incorporated into knitted component **40** through the flat knitting process, rather than other processes (e.g., stitching, bonding, shaping) that are performed after the flat knitting process. As an example, tubes **42** and portions of collar **45** are formed from overlapping and at least partially coextensive layers of knitted material, and sides or edges of one layer may be secured to the other layer. The two layers of knitted material are generally formed during the flat knitting process and do not involve supplemental stitching, bonding, or shaping processes. The overlapping layers are, therefore, formed of unitary knit construction through the flat knitting process. As another example, the regions of knitted component **40** formed from knit types that define apertures **41** are formed of unitary knit construction through the flat knitting process. As yet another example, floating yarns **46** are formed of unitary knit construction.

[0038] A further advantage of utilizing a flat knitting process to form knitted component **40** is that three-dimensional aspects may be incorporated into upper **30**. Upper **30** has a curved or otherwise three-dimensional structure that extends around the foot and conforms with a shape of the foot. The flat knitting process may, for example, form areas of knitted component **40** with some curvature in order to complement the shape of the foot. Examples of knitted components for footwear uppers that have three-dimensional aspects may be found in U.S. Patent Application Publication 2008/0110048 to Dua, et al., which is incorporated herein by reference.

[0039] Knitted component **40** is depicted separate from footwear **10** and following the flat knitting process in FIG. **6**. Whereas edges of many textile materials are cut to expose ends of the yarns forming the textile materials, knitted component **40** may be formed to have a finished configuration. That is, flat-knitting or other knitting techniques may be utilized to form knitted component **40** such that ends of the yarns within knitted component **40** are substantially absent from the edges of knitted component **40**. An advantage of the finished configuration formed through flat-knitting is that the yarns forming the edges of knitted component **40** are less likely to unravel, which is an inherent issue with weft knit materials. By forming finished edges, the integrity of knitted component **40** is strengthened and fewer or no post-processing steps are required to prevent unraveling. In addition, loose yarns are also less likely to inhibit the aesthetic appearance of upper **30**. In other words, the finished configuration of knitted component **40** may enhance the durability and aesthetic qualities of upper **20**, while increasing manufacturing efficiency.

[0040] Knitted component **40** provides one example of a configuration that is suitable for upper **30** of footwear **10**. Depending upon the intended use of an article of footwear, the desired properties of the article of footwear, and advantageous structural attributes of the article of footwear, for example, a knitted component similar to knitted component

lululemon Ex. 1010
IPR Petition - USP 9,375,046

40 may be formed through flat knitting to have the desired features. That is, flat knitting may be utilized to (a) locate specific knit types in desired areas of the knitted component, (b) locate specific yarn types in desired areas of the knitted component, (c) form overlapping knitted layers similar to tubes **42** and collar **45** in desired areas of the knitted component, (d) place strands or floating yarns similar to strands **43** and floating yarns **46** between the knitted layers, (e) form three-dimensional aspects in the knitted component, and (f) impart finished edges. More particularly, any of the features discussed above, for example, may be mixed and matched within a knitted component to form specific properties or structural attributes for a footwear upper.

[0041] Further Configurations

[0042] The features of upper **30** discussed above provides one example of a suitable configuration for footwear **10**. A variety of other configurations may also be utilized. As an example, some of the features discussed above may be absent from knitted component **40** in some configurations of footwear **10**. Referring to FIG. **7**A, collar **45** is absent from knitted component **40** such that a single layer of knitted material forms the area extending around ankle opening **31**. Similarly, tubes **42** and strands **43** are absent in FIG. **7**B. By utilizing only the structures or features that are beneficial for a particular athletic activity, for example, footwear **10** may have a minimal configuration with only necessary or advantageous elements.

[0043] As discussed above, separate areas of upper **30** may have different properties due to utilizing different knit types or yarn types in those areas. Another manner of modifying the properties of particular areas relates to fusing thermoplastic materials from the yarns in those areas. That is, particular areas may be formed from yarns that incorporate thermoplastic polymer materials. By heating the thermoplastic polymer materials, adjacent yarns, filaments, or fibers may fuse to each other in those areas to lock the knit loops together, thereby increasing stiffness or wear-resistance. In some configurations, individual layers of knitted component **40** (e.g., the exterior layer or the interior layer of tubes **42** or collar **45**) or laid-in yarns within knitted component **40** (i.e., strands **43** or floating yarns **46**) may be formed from yarns that incorporate thermoplastic polymer materials. As an alternative, the entirety of knitted component **40** may also be formed from yarns that incorporate thermoplastic polymer materials, and only portions corresponding with fused areas **47** may be heated to modify the properties. Referring to FIG. **7**C, knitted component **40** includes two fused areas **47**. One of fused areas **47** is in heel region **13** and may impart greater stiffness in order to effectively provide a heel counter to footwear **10**. Examples of footwear uppers having fused regions may be found in U.S. Pat. No. 6,910,288 to Dua, which is incorporated herein by reference. Another of fused area **47** is in forefoot region **11** and may impart greater wear-resistance to the forefoot area. Fusing may also be utilized to reinforce apertures **41**, provide areas of decreased flex, or decrease permeability.

[0044] While fusing areas of knitted component **40** may impart greater stiffness and wear-resistance to those areas, another method may be to increase the knit density in specific areas. Referring to FIG. **7**D, knitted component **40** includes two dense areas **48**. One of dense areas **48** is in heel region **13** and may impart greater stiffness in order to effectively provide a heel counter to footwear **10**. Another of dense areas **48** is in forefoot region **11** and may impart greater wear-resistance to the forefoot area. As with forming fused areas **47**, forming a denser knit may also be utilized to reinforce apertures **41**, provide areas of decreased flex, or decrease permeability.

[0045] Knitted component **40** forms both an interior surface and an opposite exterior surface of upper **30**. In some configurations of footwear **10**, other elements may be utilized in combination with knitted component **40**, and the other elements may form a portion or all of one of the interior or exterior surfaces. Referring to FIG. **7**E, a heel counter **35** is secured to knitted component **40** in heel region **13** and may be formed from a relatively stiff polymer material. An adhesive bonding process may be utilized to join heel counter **35** to knitted component **40**. In other configurations, a lining may extend over the interior surface, thereby forming a portion of the void within upper **30**. Other materials may be welded, adhered, or bonded onto the exterior surface to protect the knit structure of knitted component **40** or provide other benefits to footwear **10**.

[0046] Tubes **42** are depicted in FIGS. **2** and **3** as being immediately adjacent to at least one other tube **42**. The relative positions of tubes **42** may, however, vary significantly. Referring to FIG. **7**F, tubes **42** are separated from each other and form V-shaped structures. Whereas tubes **42** may be utilized as part of a lacing system, tubes **42** or similar structures may also be utilized to impart longitudinal stretch-resistance. Referring to FIG. **7**G, tubes **42** extend longitudinally, and strands **43** within tubes **42** may resist stretch through each of regions **11**-**13**.

[0047] The manner in which yarns **46** are incorporated into collar **45** may vary significantly. In the configuration discussed above, floating yarns **46** are generally parallel to the layers of knitted material forming collar **45** when passing the tubular structure. Referring to FIG. **8**A, yarns **46** extend from one layer of knitted material to another layer of knitted material and are generally perpendicular to the layers, thereby imparting a structure similar to a spacer-knit material that is formed through the flat knitting process. As depicted in an enlarged area of FIG. **8**A, yarns **46** may extend around yarns forming the knitted layers. In one configuration, yarns **46** may be the same yarns that form the knitted layers. That is, yarns **46** may be unknitted portions of the yarns that form the knitted layers. In another configuration, yarns **46** may be unsecured or otherwise separate (i.e., do not extend around) the yarns forming the knitted layers. Accordingly, yarns **46** may be incorporated into knitted component **40** in a variety of ways. As a further matter, some configurations of upper **30** may include a polymer foam material that is placed between the layers of knitted material following the manufacture of knitted component **40**.

[0048] As noted above, collar **45** may have a structure similar to a spacer-knit material, wherein yarns **46** extend from one layer of knitted material to another layer of knitted material and in a direction that is generally perpendicular to the layers. Although collar **45** is a suitable area for having this structure, the flat-knitting process may be utilized to impart the structure of a spacer-knit material to any area of knitted component **40**. For example, the spacer-knit configuration may be positioned on either of sides **14** and **15** in forefoot region **11** or midfoot region **12** to impart a cushioning or compressible aspect to upper **20**. Portions of strobel sock **23** or tongue **33** may also be formed through a flat knitting process to have a spacer-knit configuration. Moreover, a variety of yarns types may be utilized for areas of knitted com-

lululemon Ex. 1010
IPR Petition - USP 9,375,046

ponent **40** having the spacer-knit configuration, including mono-filament yarns or textured yarns.

[0049] In the various configurations discussed above, sockliner **23** is a separate element that is located within the void in upper **20** and strobel sock **34** is a separate element that is joined with edges of knitted component **40**. The flat knitting process may also be utilized to form sockliner **23** and strobel sock **34** of unitary knit construction, as depicted in FIG. **8**B. As with collar **45**, a sockliner **23** of unitary knit construction may be formed to include floating yarns that impart a compressible configuration. The flat knitting process may also be utilized to form other elements, such as tongue **33**, of unitary knit construction.

[0050] Manufacturing Efficiency

[0051] As discussed in the Background section above, the upper of athletic footwear, for example, may be formed from multiple material elements that each impart different properties to various areas of the footwear. In order to manufacture a conventional upper, the material elements are cut to desired shapes and then joined together, usually with stitching or adhesive bonding. As the number and types of material elements incorporated into an upper increases, the time and expense associated with transporting, stocking, cutting, and joining the material elements may also increase. Waste material from cutting and stitching processes also accumulates to a greater degree as the number and types of material elements incorporated into the upper increases. Moreover, footwear with a greater number of materials, material elements, and other components may be more difficult to recycle than uppers formed from few elements and materials. By decreasing the number of elements and materials utilized in an upper, therefore, waste may be decreased while increasing the efficiency of manufacture and recycleability.

[0052] Whereas conventional uppers require a variety of manufacturing steps involving a plurality of material elements, knitted component **40** may be formed through a single flat knitting process. Following the flat knitting process, a relatively small number of steps are required to incorporate knitted component **40** into footwear **10**. More particularly, strobel sock **34** is joined to edges of knitted component **40**, two edges in heel region **13** are joined, lace **32** is incorporated, and the substantially completed upper **30** is secured with sole structure **20**. In comparison with conventional manufacturing processes, the use of knitted component **40** may reduce the overall number of manufacturing steps. Additionally, waste may be decreased while increasing recycleability.

[0053] The invention is disclosed above and in the accompanying figures with reference to a variety of configurations. The purpose served by the disclosure, however, is to provide an example of the various features and concepts related to the invention, not to limit the scope of the invention. One skilled in the relevant art will recognize that numerous variations and modifications may be made to the configurations described above without departing from the scope of the present invention, as defined by the appended claims.

1. An article of footwear having an upper and a sole structure secured to the upper, the upper comprising:

a knitted component defining a tubular structure formed of unitary knit construction; and

a yarn having a configuration of a one-dimensional material, the yarn extending through at least a portion of a length of the tube.

2. The article of footwear recited in claim **1**, wherein the knitted component extends along a lateral side of the upper, along a medial side of the upper, over a forefoot region of the upper, and around a heel region of the upper.

3. The article of footwear recited in claim **2**, wherein the tubular structure is located on the lateral side of the upper and is oriented to extend upward from an area proximal the sole structure, and the yarn extends outward from an end of the tubular structure to form a loop that receives a lace.

4. The article of footwear recited in claim **2**, wherein the tubular structure is located in the heel region and around at least a portion of an ankle opening of the upper, and the yarn and a plurality of additional yarns are located within the tubular structure.

5. An article of footwear having an upper and a sole structure secured to the upper, the upper comprising:

a first knitted layer that forms at least a portion of an exterior surface of the upper;

a second knitted layer formed of unitary knit construction with the first knitted layer, the second knitted layer being positioned adjacent to the first knitted layer and at least partially coextensive with the first knitted layer to define a tube between the first knitted layer and the second knitted layer; and

a strand having a configuration of a one-dimensional material, the strand extending through the tube and between the first knitted layer and the second knitted layer.

6. The article of footwear recited in claim **5**, wherein the first knitted layer extends along a lateral side of the upper, along a medial side of the upper, over a forefoot region of the upper, and around a heel region of the upper.

7. The article of footwear recited in claim **5**, wherein the tube is oriented to extend upward from an area proximal the sole structure, a portion of the strand extending outward from an end of the tube and forming a loop that receives a lace.

8. The article of footwear recited in claim **7**, wherein the first knitted layer defines an aperture adjacent to the end of the tube, and the lace extends through the aperture.

9. The article of footwear recited in claim **7**, wherein the strand extends into another tube formed by the first knitted layer and the second knitted layer.

10. An article of footwear having an upper and a sole structure secured to the upper, the upper comprising:

a knitted component defining a first tube and a second tube each formed of unitary knit construction, the first tube and the second tube extending in an upward direction from an area proximal the sole structure, and ends of the first tube and the second tube being located in an upper area of the upper;

a strand extending through the first tube and the second tube, a portion of the strand extending outward from the ends of the first tube and the second tube to form a loop; and

a lace extending through the loop.

11. The article of footwear recited in claim **10**, wherein the first tube and the second tube are adjacent and parallel to each other.

12. The article of footwear recited in claim **10**, wherein the knitted component defines an aperture adjacent to the ends of the first tube and the second tube, and the lace extends through the aperture.

13. The article of footwear recited in claim **10**, wherein the knitted component includes:

a pair of at least partially coextensive knitted layers formed of unitary knit construction; and

lululemon Ex. 1010
IPR Petition - USP 9,375,046

a plurality of floating yarns extending between the knitted layers.

14. The article of footwear recited in claim **13**, wherein the knitted layers and the floating yarns are located adjacent to an ankle opening of the upper.

15. An article of footwear having an upper and a sole structure secured to the upper, the upper comprising:

a knitted component defining a plurality of tubes formed of unitary knit construction, a first portion of the tubes being located on a lateral side of the footwear, and a second portion of the tubes being located on a medial side of the footwear;

at least one strand extending through the tubes and extending outward from ends of tubes to form a plurality of loops, the strand having a configuration of a one-dimensional material; and

a lace extending through the loops.

16. The article of footwear recited in claim **15**, wherein the knitted component defines apertures adjacent to the ends of the tubes, and the lace extends through the apertures.

17. The article of footwear recited in claim **15**, wherein at least two of the tubes are adjacent and parallel to each other.

18. The article of footwear recited in claim **15**, wherein the knitted component forms a majority of an exterior surface of the upper.

19. The article of footwear recited in claim **15**, wherein the knitted component includes:

a pair of at least partially coextensive knitted layers formed of unitary knit construction; and

a plurality of floating yarns located between the knitted layers and extending in a direction that is substantially parallel to the knitted layers,

the knitted layers and the floating yarns being located adjacent to an ankle opening of the upper.

20. The article of footwear recited in claim **15**, wherein a first area of the knitted component has a first knit type and a second area of the knitted component has a second knit type, the first knit type being different than the second knit type.

21. The article of footwear recited in claim **15**, wherein a first area of the knitted component has a first yarn type and a second area of the knitted component has a second yarn type, the first yarn type being different than the second yarn type.

22. An article of footwear having an upper that includes a lacing system, the lacing system comprising:

a knitted component that defines (a) a tube formed of unitary knit construction and (b) an aperture positioned adjacent to an end of the tube;

a strand extending through the tube and forming a loop; and

a lace extending through the loop and the aperture.

23. An article of footwear having an upper and a sole structure secured to the upper, the upper comprising a knitted component that includes:

a first knitted layer and a second knitted layer that are at least partially coextensive with each other and formed of unitary knit construction; and

a plurality of floating yarns located between the first knitted layer and the second knitted layer and extending in a direction that is substantially parallel to the first knitted layer and the second knitted layer.

24. The article of footwear recited in claim **23**, wherein the upper defines an interior void for receiving a foot and an ankle opening providing access to the void, the first knitted layer, the second knitted layer, and the floating yarns being positioned adjacent to the ankle opening.

25. The article of footwear recited in claim **24**, wherein the first knitted layer, the second knitted layer, and the floating yarns are located on a medial side of the upper and a lateral side of the upper.

26. The article of footwear recited in claim **23**, wherein the knitted component defines a tube formed of unitary knit construction, and a strand extends through a length of the tube.

27. The article of footwear recited in claim **23**, wherein a first area of the knitted component has a first knit type and a second area of the knitted component has a second knit type, the first knit type being different than the second knit type.

28. The article of footwear recited in claim **23**, wherein a first area of the knitted component has a first yarn type and a second area of the knitted component has a second yarn type, the first yarn type being different than the second yarn type.

29. An article of footwear having an upper and a sole structure secured to the upper, the upper comprising a knitted component that includes:

a first knitted layer and a second knitted layer formed of unitary knit construction, the first knitted layer being at least partially coextensive with the second knitted layer to define an interior volume between the first knitted layer and the second knitted layer; and

a plurality of floating yarns located within the interior volume and extending between the first knitted layer and the second knitted layer.

30. The article of footwear recited in claim **29**, wherein the upper defines an interior void for receiving a foot and an ankle opening providing access to the void, the first knitted layer, the second knitted layer, and the floating yarns being positioned adjacent to the ankle opening.

31. The article of footwear recited in claim **30**, wherein the first knitted layer, the second knitted layer, and the floating yarns are located on a medial side of the upper, located on a lateral side of the upper, and extend around a heel region of the upper.

32. An article of footwear having an upper and a sole structure secured to the upper, the upper defining an interior void for receiving a foot of a wearer, and the upper having an ankle opening that provides access to the void, the upper comprising a knitted component that includes:

a first knitted layer forming at least a portion of an exterior surface of the upper adjacent to the ankle opening;

a second knitted layer forming at least a portion of an interior surface of the upper adjacent to the ankle opening; and

a plurality of floating yarns located between the first knitted layer and the second knitted layer,

wherein the first knitted layer and the second knitted layer are joined to each other at the ankle opening and at a location spaced from the ankle opening to define a separated area therebetween, and the floating yarns are located in the separated area.

33. The article of footwear recited in claim **32**, wherein the knitted component extends along a lateral side of the upper, along a medial side of the upper, over a forefoot region of the upper, and around a heel region of the upper.

34. The article of footwear recited in claim **32**, wherein the floating yarns are substantially parallel to the first knitted layer and the second knitted layer.

35. The article of footwear recited in claim **32**, wherein a portion of the knitted component located in a midfoot region of the footwear defining a tube formed of unitary knit construction, and a strand extends through a length of the tube.

lululemon Ex. 1010
IPR Petition - USP 9,375,046

36. A method of manufacturing an article of footwear, the method comprising:

utilizing a flat knitting process to form a knitted component that includes at least one yarn incorporating a thermoplastic polymer material;

heating at least an area of the knitted component to fuse the yarn incorporating the thermoplastic polymer material; and

incorporating the knitted component into an upper of the article of footwear.

37. The method recited in claim **36**, wherein the step of utilizing the flat knitting process includes locating the yarn incorporating the thermoplastic polymer material throughout the knitted component.

38. The method recited in claim **36**, wherein the step of utilizing the flat knitting process includes locating the yarn incorporating the thermoplastic polymer in only the area of the knitted component.

39. The method recited in claim **36**, wherein the step of incorporating includes locating the area of the knitted component in a heel region of the footwear.

40. The method recited in claim **36**, wherein the step of incorporating includes locating the area of the knitted component in a forefoot region of the footwear.

41. A method of manufacturing an article of footwear, the method comprising:

utilizing a flat knitting process to form a knitted component that includes a first knitted layer, a second knitted layer, and a plurality of yarns secured to the first knitted layer and the second knitted layer and extending from the first knitted layer to the second knitted layer; and

incorporating the knitted component into an upper of the article of footwear.

42. The method recited in claim **41**, further including a step of selecting the yarns to be mono-filament yarns.

* * * * *

lululemon Ex. 1010
IPR Petition - USP 9,375,046