US011497864B2

(12) **United States Patent**
Conley et al.

(10) **Patent No.: US 11,497,864 B2**
(45) **Date of Patent: Nov. 15, 2022**

(54) **ELECTRONIC VAPORIZER**

(71) Applicant: **FUMA INTERNATIONAL, LLC**, Medina, OH (US)

(72) Inventors: **Gregory D. Conley**, Medina, OH (US); **Daniel C. Hillenbrandt**, Brunswick, OH (US)

(73) Assignee: **FUMA INTERNATIONAL, LLC**, Medina, OH (US)

(*) Notice: Subject to any disclaimer, the term of this patent is extended or adjusted under 35 U.S.C. 154(b) by 709 days.

(21) Appl. No.: **16/451,483**

(22) Filed: **Jun. 25, 2019**

(65) **Prior Publication Data**

US 2021/0235772 A1 Aug. 5, 2021

Related U.S. Application Data

(63) Continuation of application No. 15/377,522, filed on Dec. 13, 2016, now Pat. No. 10,334,881, which is a

(Continued)

(51) **Int. Cl.**
A61M 11/04 (2006.01)
A24F 40/44 (2020.01)

(Continued)

(52) **U.S. Cl.**
CPC ***A61M 11/042*** (2014.02); ***A24F 40/42*** (2020.01); ***A24F 40/44*** (2020.01); ***A61M 15/06*** (2013.01);

(Continued)

(58) **Field of Classification Search**
None
See application file for complete search history.

(56) **References Cited**

U.S. PATENT DOCUMENTS

1,771,366 A * 7/1930 Alfredu A61M 16/108 128/203.22
1,968,509 A 7/1934 Tiffany

(Continued)

FOREIGN PATENT DOCUMENTS

CN 2719043 8/2005
CN 200966824 10/2007

(Continued)

OTHER PUBLICATIONS

Wikipedia; Electronic cigarette—Wikipedia, the free encyclopedia; Feb. 9, 2010; http://web.archive.org/web/20100209122659/http://en.wikipedia.org/wiki/Electronic_cigarette.

(Continued)

Primary Examiner — Thor S Campbell

(57) **ABSTRACT**

An electronic vaporizer is provided. The electronic vaporizer includes a cartridge that facilitates provision of a vaporized solution to an individual. The cartridge includes a housing that includes an interior, wherein the housing is one of a polymer housing or a ceramic housing. The cartridge also includes a heating element located in the interior of the housing, wherein the heating element is configured to vaporize a solution for oral provision to the individual. The vaporizer may also include a power harvesting device operative to acquire energy from the environment for use with powering the heating element.

48 Claims, 6 Drawing Sheets

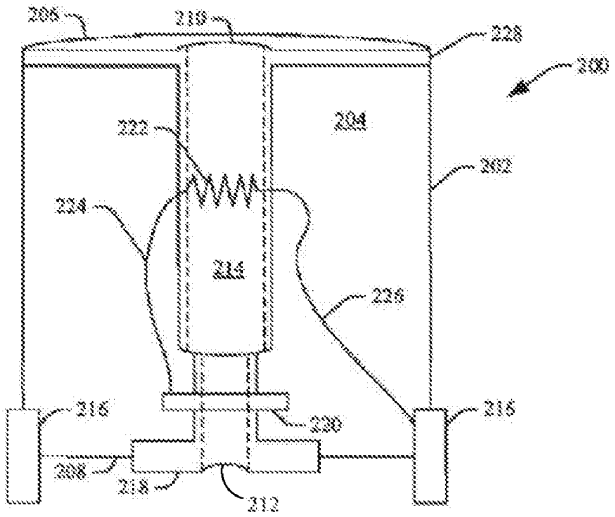

Related U.S. Application Data

continuation of application No. 14/510,955, filed on Oct. 9, 2014, now Pat. No. 9,532,604, which is a continuation of application No. 13/594,813, filed on Aug. 25, 2012, now Pat. No. 8,897,628, which is a continuation-in-part of application No. 12/843,917, filed on Jul. 27, 2010, now abandoned.

(60) Provisional application No. 61/527,434, filed on Aug. 25, 2011, provisional application No. 61/273,097, filed on Jul. 31, 2009, provisional application No. 61/271,819, filed on Jul. 27, 2009.

(51) **Int. Cl.**

A61M 15/06	(2006.01)
A61M 16/00	(2006.01)
A24F 40/10	(2020.01)
A24F 40/42	(2020.01)
H05B 1/02	(2006.01)

(52) **U.S. Cl.**

CPC ***H05B 1/0244*** (2013.01); *A24F 40/10* (2020.01); *A61M 16/0066* (2013.01); *A61M 2016/0024* (2013.01); *A61M 2016/0027* (2013.01); *A61M 2016/0039* (2013.01); *A61M 2205/13* (2013.01); *A61M 2205/3653* (2013.01); *A61M 2205/50* (2013.01); *A61M 2205/6054* (2013.01); *A61M 2205/825* (2013.01); *A61M 2205/8206* (2013.01); *H05B 2203/021* (2013.01)

(56) **References Cited**

U.S. PATENT DOCUMENTS

2,057,353 A * 10/1936 Whittemore, Jr. 392/404
3,200,819 A * 8/1965 Gilbert A24F 40/485 131/273
4,284,089 A 8/1981 Ray
4,945,929 A 8/1990 Egilmex
4,947,874 A * 8/1990 Brooks A24F 40/50 131/194
4,947,875 A * 8/1990 Brooks A61M 15/00 131/194
4,966,171 A 10/1990 Serrano et al.
4,969,476 A 11/1990 Bale et al.
5,050,621 A 9/1991 Creighton et al.
5,115,820 A 5/1992 Hauser et al.
5,144,962 A * 9/1992 Counts A24D 1/20 131/194
5,249,586 A 10/1993 Morgan et al.
5,865,185 A 2/1999 Collins et al.
5,878,752 A 3/1999 Adams et al.
5,894,841 A * 4/1999 Voges A61M 15/06 128/200.14
6,155,268 A * 12/2000 Takeuchi A24F 40/485 131/194
6,196,218 B1 * 3/2001 Voges B05B 17/0607 128/200.14
6,443,146 B1 9/2002 Voges
6,598,607 B2 7/2003 Adiga
7,412,259 B2 8/2008 Yoo et al.
D590,988 S 4/2009 Hon
D590,989 S 4/2009 Hon
D590,990 S 4/2009 Hon
D590,991 S 4/2009 Hon
7,581,540 B2 9/2009 Hale et al.
D613,903 S 4/2010 Wu
D613,904 S 4/2010 Wu
7,726,320 B2 6/2010 Robinson et al.
7,832,410 B2 11/2010 Hon
7,832,655 B2 * 11/2010 Tollens A01M 1/205 239/69
7,845,359 B2 * 12/2010 Montaser A61M 15/009 438/689
7,984,684 B2 7/2011 Hinderks
8,156,944 B2 4/2012 Han
8,393,331 B2 * 3/2013 Hon A24B 15/16 131/194
8,603,397 B2 12/2013 Gruenbacher et al.
8,689,805 B2 4/2014 Hon
8,794,231 B2 * 8/2014 Thorens A24D 3/18 219/535
8,863,753 B2 10/2014 Li et al.
8,897,628 B2 11/2014 Conley et al.
8,910,639 B2 12/2014 Chang et al.
8,961,492 B2 2/2015 Imran et al.
8,997,753 B2 4/2015 Li et al.
8,997,754 B2 4/2015 Tucker et al.
9,004,073 B2 4/2015 Tucker et al.
9,022,026 B2 * 5/2015 Fang A24F 40/485 128/202.21
9,095,175 B2 8/2015 Terry et al.
9,148,009 B2 9/2015 Xiang
9,197,726 B2 11/2015 Stanimirovic et al.
9,204,670 B2 12/2015 Liu
D749,505 S 2/2016 Verleur et al.
D750,320 S 2/2016 Verleur et al.
9,259,035 B2 2/2016 Terry et al.
D752,278 S 3/2016 Verleur et al.
D752,280 S 3/2016 Verleur et al.
D752,727 S 3/2016 Tracey
9,301,548 B2 4/2016 Liu
9,301,549 B2 4/2016 Liu
9,332,787 B2 5/2016 Liu
9,352,288 B2 5/2016 Terry et al.
9,364,024 B2 6/2016 Liu
9,364,025 B2 6/2016 Liu
D763,502 S 8/2016 Verleur et al.
9,417,107 B2 8/2016 Xiang
9,427,711 B2 8/2016 Terry et al.
D767,820 S 9/2016 Jordan et al.
D767,822 S 9/2016 Jordan et al.
9,486,014 B2 11/2016 Liu
D776,869 S 1/2017 Heidl
9,532,597 B2 1/2017 Tucker et al.
9,532,604 B2 1/2017 Conley et al.
9,555,203 B2 1/2017 Terry et al.
D779,725 S 2/2017 Bramley et al.
D780,993 S 3/2017 Bramley et al.
D782,108 S 3/2017 Jordan et al.
9,597,466 B2 * 3/2017 Henry, Jr. A61M 11/042
9,602,646 B2 3/2017 Stanimirovic et al.
9,609,893 B2 4/2017 Novak, III et al.
2005/0016550 A1 * 1/2005 Katase A24F 40/50 131/194
2006/0196518 A1 9/2006 Hon
2007/0267031 A1 11/2007 Hon
2008/0073443 A1 * 3/2008 Tollens B05B 17/0646 222/638
2008/0092912 A1 4/2008 Robinson et al.
2008/0230052 A1 9/2008 Montaser
2008/0247892 A1 10/2008 Kawasumi
2008/0257367 A1 10/2008 Paterno et al.
2008/0276947 A1 11/2008 Martzel
2008/0303286 A1 * 12/2008 Vangel F03D 3/02 290/55
2009/0095311 A1 * 4/2009 Han H02J 7/00 131/194
2009/0126745 A1 * 5/2009 Hon H05B 3/42 131/273
2009/0188490 A1 * 7/2009 Han A61M 15/06 128/200.14
2009/0272379 A1 * 11/2009 Thorens A24D 3/18 219/535
2010/0031968 A1 2/2010 Sheikh et al.
2010/0037903 A1 2/2010 Coleman, III et al.
2010/0200006 A1 8/2010 Robinson et al.
2010/0200008 A1 8/2010 Taieb
2010/0242974 A1 9/2010 Pan
2011/0011396 A1 1/2011 Fang

(56) **References Cited**

U.S. PATENT DOCUMENTS

2011/0192399	A1	8/2011	Wilke et al.	
2011/0277757	A1	11/2011	Terry et al.	
2011/0277760	A1	11/2011	Terry et al.	
2011/0304282	A1	12/2011	Li et al.	
2012/0285475	A1	11/2012	Liu	
2013/0309102	A1*	11/2013	Gruenbacher	A61L 9/145 417/54
2013/0312739	A1	11/2013	Rome et al.	
2014/0020696	A1	1/2014	Liu	
2014/0060528	A1	3/2014	Liu	
2014/0060554	A1	3/2014	Collett et al.	
2014/0069444	A1	3/2014	Cyphert et al.	
2014/0096781	A1	4/2014	Sears et al.	
2014/0096782	A1	4/2014	Ampolini et al.	
2014/0150783	A1	6/2014	Liu	
2014/0150784	A1	6/2014	Liu	
2014/0190478	A1	7/2014	Liu	
2014/0190502	A1	7/2014	Liu	
2014/0253144	A1	9/2014	Novak, III et al.	
2014/0261495	A1	9/2014	Novak, III et al.	
2014/0305450	A1	10/2014	Xiang	
2014/0373833	A1*	12/2014	Liu	A24F 40/40 128/202.21
2015/0065929	A1	3/2015	Walker	
2015/0078735	A1	3/2015	Cormack	
2015/0090281	A1	4/2015	Chen	
2015/0128966	A1	5/2015	Lord	
2015/0189916	A1	7/2015	Wu	
2015/0215439	A1	7/2015	Stanimirovic et al.	
2015/0258289	A1	9/2015	Henry, Jr. et al.	
2015/0272217	A1*	10/2015	Chen	A24F 40/485 131/329
2015/0296884	A1*	10/2015	Liu	H05B 3/03 131/329
2015/0296885	A1	10/2015	Liu	
2016/0113325	A1*	4/2016	Liu	A24F 40/42 392/404
2016/0374392	A1	12/2016	Liu	

FOREIGN PATENT DOCUMENTS

CN	201018927		2/2008	
CN	201085044		7/2008	
CN	101366554		2/2009	
CN	201238610		5/2009	
CN	101606758	A *	12/2009	A24F 40/40
CN	201379072		1/2010	
EP	0845220		3/2003	
KR	20090033311		4/2009	
WO	WO2000/028843		5/2000	
WO	WO2004/095955		11/2004	
WO	WO2005099494		10/2005	
WO	WO2007/078273		7/2007	
WO	WO2007/131449		11/2007	
WO	WO2007131450		11/2007	
WO	WO2010/091593		8/2010	
WO	WO-2014101129	A1 *	7/2014	A24F 47/008
WO	WO-2014134778	A1 *	9/2014	A24F 47/008
WO	WO-2014146232	A1 *	9/2014	A24F 47/008

OTHER PUBLICATIONS

Complaint for Patent Infringement with exhibits as filed Mar. 6, 2019; United States District Court for the Middle District of North Carolina; Civil Action No. 1:19-cv-00260.

Defendant R.J. Reynolds Vapor Company's Answer, Affirmative Defenses and Counterclaim to Complaint for Patent Infringement with exhibits as filed Apr. 29, 2019; United States District Court for the Middle District of North Carolina; Civil Action No. 1:19-cv-00260.

Crown 7 HYDRO device; *https://www.youtube.com/watch?v=tQNFFw8A_DI* (YouTube video published on Dec. 10, 2008).

NJOY NPRO device; https://www.youtube.com/watch?v=TBdX24ALpLY (YouTube video published on Dec. 5, 2008).

Smoke 51 Devices as disclosed on p. 53 and listed on p. 54 of the Apr. 29, 2019 Defendant's Answer in Civil Action No. 1:19-cv-00260.

Fuma International, LLC's Rule 26(f) Report filed on May 28, 2019, U.S. District Court for the Middle District of North Carolina, Civil Action Nos. 19-cv-260 (lead case) and 19-cv-6600260.

Exhibit A to Plaintiff Fuma International LLC's Rule 26(f) Report filed May 28, 2019, Proposed Schedule.

Exhibit B to Plaintiff Fuma International LLC's Rule 26(f) Report filed May 28, 2019, Proposed E-Discovery Order.

Exhibit C to Plaintiff Fuma International LLC's Rule 26(f) Report filed May 28, 2019, Proposed Protective Order.

Exhibit D to Plaintiff Fuma International LLC's Rule 26(f) Report filed May 28, 2019, Proposed Supplemental Protective Order.

Defendant R.J. Reynolds Vapor Company's Notice Pursuant to 25 U.S.C. § 282 dated Oct. 15, 2021, U.S. District Court for the Middle District of North Carolina, Civil Action Nos. 19-cv-260 (lead case) and 19-cv-660, with Publications.

Electronic cigarette—Wikipedia archival copy, dated Feb. 9, 2010 from https://web.archive.org/.

Joining of Materials and Structures, From Pragmatic Process to Enabling Technology, Robert W. Messier, Jr., 2004 (Exerpt).

Smoke Anywhere USA, Inc. to Introduce Its Electronic Cigarette Fifty-One with Comments, Aug. 16, 2008.

New Electronic Cigarette—Cool 3D! by Smoke51.com with Comments, Oct. 31, 2008.

Smoke51.com Website Excerpts.

Smoke 51 User Manual.

Trans-Power Website Excerpts.

E-Cig Forum Website (Smoke51).

Leaford's YouTube Channel, E-8 84mm Disposable Cartomizer E-Cigarette, Leaford's Vacation Special Part 2: The Sensation Micro (E8) From E-Smoke.net, https://www.youtube.com/watch?v=UTBfFApJs1c, Jun. 15, 2009.

Rustylug's YouTube Channel with Comments, Sep. 10, 2008.

Smoke51Ohio's Smoke 51 Duo Presentation.

Smoke51Ohio's Smoke 51 Duo Marketing Piece.

Smoke51Ohio's Press Release Announcing Fifty-One Product.

Compare Fifty-One to Other Electronic Cigarettes.

Plaintiff Fuma International LLC's Trial Brief dated Oct. 25, 2021, U.S. District Court for the Middle District of North Carolina, Civil Action Nos. 19-cv-260 (lead case) and 19-cv-660.

Exhibit 1 to Plaintiff Fuma International LLC's Trial Brief dated Oct. 25, 2021, U.S. District Court for the Middle District of North Carolina, Civil Action Nos. 19-cv-260 (lead case) and 19-cv-660.

Defendant R.J. Reynolds Vapor Company's Trial Brief dated Oct. 25, 2021, U.S. District Court for the Middle District of North Carolina, Civil Action Nos. 19-cv-260 (lead case) and 19-cv-660.

Exhibit A to Defendant R.J. Reynolds Vapor Company's Trial Brief dated Oct. 25, 2021, Gregory D. Conley Deposition Transcript Excerpts.

Exhibit B to Defendant R.J. Reynolds Vapor Company's Trial Brief dated Oct. 25, 2021, Shanhong Wang Compressed Deposition Transcript.

Exhibit C to Defendant R.J. Reynolds Vapor Company's Trial Brief dated Oct. 25, 2021, Shanhong Wang Deposition Exhibit 5.

Exhibit D to Defendant R.J. Reynolds Vapor Company's Trial Brief dated Oct. 25, 2021, Publication No. CN101366554 Application in English and Chinese.

Exhibit E to Defendant R.J. Reynolds Vapor Company's Trial Brief dated Oct. 25, 2021, Publication No. CN201085044 to Fang Xiaolin in English.

Exhibit F to Defendant R.J. Reynolds Vapor Company's Trial Brief dated Oct. 25, 2021, U.S. Patent Publication No. 2009/0095311 to Li Han.

Exhibit G to Defendant R.J. Reynolds Vapor Company's Trial Brief dated Oct. 25, 2021, U.S. Pat. No. 4,947,874 to Brooks et al.

Exhibit H to Defendant R.J. Reynolds Vapor Company's Trial Brief dated Oct. 25, 2021, Prosecution History of U.S. Appl. No. 12/843,917.

(56) **References Cited**

OTHER PUBLICATIONS

Zoom Videotaped Deposition Transcript (Revised) of Shanhong Wang of Sep. 24, 2021, U.S. District Court for the Middle District of North Carolina, Civil Action Nos. 19-cv-260 (lead case) and 19-cv-660.
Exhibit 1 to Zoom Videotaped Deposition Transcript (Revised) of Shanhong Wang of Sep. 24, 2021.
Exhibit 2 to Zoom Videotaped Deposition Transcript (Revised) of Shanhong Wang of Sep. 24, 2021.
Exhibit 3 to Zoom Videotaped Deposition Transcript (Revised) of Shanhong Wang of Sep. 24, 2021.
Exhibit 4 to Zoom Videotaped Deposition Transcript (Revised) of Shanhong Wang of Sep. 24, 2021.
Exhibit 5 to Zoom Videotaped Deposition Transcript (Revised) of Shanhong Wang of Sep. 24, 2021.
Exhibit 6 to Zoom Videotaped Deposition Transcript (Revised) of Shanhong Wang of Sep. 24, 2021.
Exhibit 7 to Zoom Videotaped Deposition Transcript (Revised) of Shanhong Wang of Sep. 24, 2021.
Exhibit 8 to Zoom Videotaped Deposition Transcript (Revised) of Shanhong Wang of Sep. 24, 2021.
Exhibit 9 to Zoom Videotaped Deposition Transcript (Revised) of Shanhong Wang of Sep. 24, 2021.
Exhibit 10 to Zoom Videotaped Deposition Transcript (Revised) of Shanhong Wang of Sep. 24, 2021.
Exhibit 11 to Zoom Videotaped Deposition Transcript (Revised) of Shanhong Wang of Sep. 24, 2021.
Exhibit 12 to Zoom Videotaped Deposition Transcript (Revised) of Shanhong Wang of Sep. 24, 2021.
Defendant R.J. Reynolds Vapor Company's Invalidity Expert Report of Dr. John M. Collins dated Jul. 23, 2020 (Redacted), U.S. District Court for the Middle District of North Carolina, Civil Action Nos. 19-cv-260 (lead case) and 19-cv-660.
Exhibit A to Defendant R.J. Reynolds Vapor Company's Invalidity Expert Report of Dr. John M. Collins dated Jul. 23, 2020, U.S. District Court for the Middle District of North Carolina, Civil Action Nos. 19-cv-260 (lead case) and 19-cv-660.
Exhibit B to Defendant R.J. Reynolds Vapor Company's Invalidity Expert Report of Dr. John M. Collins dated Jul. 23, 2020, U.S. District Court for the Middle District of North Carolina, Civil Action Nos. 19-cv-260 (lead case) and 19-cv-660.
Plaintiff Fuma International LLC's Rebuttal Expert Report of Glenn Vallee, Ph.D. Regarding Validity of the '604 and '881 Patents dated Aug. 21, 2020, U.S. District Court for the Middle District of North Carolina, Civil Action Nos. 19-cv-260 (lead case) and 19-cv-660.
Exhibit A to Plaintiff Fuma International LLC's Rebuttal Expert Report of Glenn Vallee, Ph.D. Regarding Validity of the '604 and '881 Patents dated Aug. 21, 2020, U.S. District Court for the Middle District of North Carolina, Civil Action Nos. 19-cv-260 (lead case) and 19-cv-660.
Defendant R.J. Reynolds Vapor Company's Reply Expert Report of Dr. John M. Collins dated Sep. 4, 2020, U.S. District Court for the Middle District of North Carolina, Civil Action Nos. 19-cv-260 (lead case) and 19-cv-660.
Exhibit A to Defendant R.J. Reynolds Vapor Company's Reply Expert Report of Dr. John M. Collins dated Sep. 4, 2020, U.S. District Court for the Middle District of North Carolina, Civil Action Nos. 19-cv-260 (lead case) and 19-cv-660.
Exhibit B to Defendant R.J. Reynolds Vapor Company's Reply Expert Report of Dr. John M. Collins dated Sep. 4, 2020, U.S. District Court for the Middle District of North Carolina, Civil Action Nos. 19-cv-260 (lead case) and 19-cv-660.
Plaintiff Fuma International LLC's Motion for Summary Judgment of Infringement dated Oct. 20, 2020, U.S. District Court for the Middle District of North Carolina, Civil Action Nos. 19-cv-260(lead case) and 19-cv-660.
Plaintiff Fuma International LLC's Memorandum of Law in Support of Plaintiff's Motion for Summary Judgment of: (I) Infringement of the '881 Patent by Defendant's Vuse Solo and Vuse Ciro Products, and (II) Infringement of the '604 Patent by Defendant's Vuse Ciro Product dated Oct. 20, 2020, U.S. District Court for the Middle District of North Carolina, Civil Action Nos. 19-cv-260(lead case) and 19-cv-660.
Exhibit A to Plaintiff Fuma International LLC's Memorandum of Law in Support of Plaintiff's Motion for Summary Judgment dated Oct. 20, 2020, Responsive Expert Report of Dr. John M. Collins (Redacted).
Exhibit A (John Collins CV) of Exhibit A to Plaintiff Fuma International LLC's Memorandum of Law in Support of Plaintiff's Motion for Summary Judgment dated Oct. 20, 2020, Responsive Expert Report of Dr. John M. Collins.
Exhibit B (Material Considered List) of Exhibit Ato Plaintiff Fuma International LLC's Memorandum of Law in Support of Plaintiff's Motion for Summary Judgment dated Oct. 20, 2020, Responsive Expert Report of Dr. John M. Collins.
Exhibit B to Plaintiff Fuma International LLC's Memorandum of Law in Support of Plaintiff's Motion for Summary Judgment dated Oct. 20, 2020, Vuse Solo G2 Final Infringement Contentions Claim Chart for U.S. Pat. No. 10,334,881.
Exhibit C to Plaintiff Fuma International LLC's Memorandum of Law in Support of Plaintiff's Motion for Summary Judgment dated Oct. 20, 2020, Vuse Solo G1 Final Infringement Contentions Claim Chart for U.S. Pat. No. 10,334,881.
Exhibit D to Plaintiff Fuma International LLC's Memorandum of Law in Support of Plaintiff's Motion for Summary Judgment dated Oct. 20, 2020, Expert Report of Glenn Vallee, Ph.D. on Infringement.
Exhibit A (Glenn Vallee CV and Testimony History) of Exhibit D to Plaintiff Fuma International LLC's Memorandum of Law in Support of Plaintiff's Motion for Summary Judgment dated Oct. 20, 2020, Expert Report of Glenn Vallee, Ph.D. on Infringement.
Exhibit B (Documents Considered) of Exhibit D to Plaintiff Fuma International LLC's Memorandum of Law in Support of Plaintiff's Motion for Summary Judgment dated Oct. 20, 2020, Expert Report of Glenn Vallee, Ph.D. on Infringement.
Exhibit C (Declaration under 37 C.F.R. § 1.131 in U.S. Appl. No. 15/377,522) of Exhibit D to Plaintiff Fuma International LLC's Memorandum of Law in Support of Plaintiff's Motion for Summary Judgment dated Oct. 20, 2020, Expert Report of Glenn Vallee, Ph.D. on Infringement.
Exhibit D (Vuse Solo G1 Infringement Claim Chart for U.S. Pat. No. 9,532,604 for Fuma Expert Report on Infringement) of Exhibit D to Plaintiff Fuma International LLC's Memorandum of Law in Support of Plaintiff's Motion for Summary Judgment dated Oct. 20, 2020, Expert Report of Glenn Vallee, Ph.D. on Infringement.
Exhibit E (Vuse Solo G2 Infringement Claim Chart for U.S. Pat. No. 9,532,604 for Fuma Expert Report on Infringement) of Exhibit D to Plaintiff Fuma International LLC's Memorandum of Law in Support of Plaintiff's Motion for Summary Judgment dated Oct. 20, 2020, Expert Report of Glenn Vallee, Ph.D. on Infringement.
Exhibit J (Fuma's Embodying Products) of Exhibit D to Plaintiff Fuma International LLC's Memorandum of Law in Support of Plaintiff's Motion for Summary Judgment dated Oct. 20, 2020, Expert Report of Glenn Vallee, Ph.D. on Infringement.
Exhibit E to Plaintiff Fuma International LLC's Memorandum of Law in Support of Plaintiff's Motion for Summary Judgment dated Oct. 20, 2020, Vuse Solo G1 Infringement Claim Chart for U.S. Pat. No. 10,334,881 for Fuma Expert Report on Infringement.
Exhibit F to Plaintiff Fuma International LLC's Memorandum of Law in Support of Plaintiff's Motion for Summary Judgment dated Oct. 20, 2020, Vuse Solo G2 Infringement Claim Chart for U.S. Pat. No. 10,334,881 for Fuma Expert Report on Infringement.
Exhibit G to Plaintiff Fuma International LLC's Memorandum of Law in Support of Plaintiff's Motion for Summary Judgment dated Oct. 20, 2020, Expert Report of Glenn Vallee, Ph.D. on Infringement in Reply to Aug. 21, 2020 Rebuttal Report of Dr. Collins (Redacted).
Exhibit A ("Shigley's Mechanical Engineering Design" Excerpt) of Exhibit G to Plaintiff Fuma International LLC's Memorandum of Law in Support of Plaintiff's Motion for Summary Judgment dated Oct. 20, 2020, Expert Report of Glenn Vallee, Ph.D. on Infringement in Reply to Aug. 21, 2020 Rebuttal Report of Dr. Collins.

(56) **References Cited**

OTHER PUBLICATIONS

Exhibit B (Hibbeler, "Engineering Mechanics, Statics and Dynamics" Excerpt) of Exhibit G to Plaintiff Fuma International LLC's Memorandum of Law in Support of Plaintiff's Motion for Summary Judgment dated Oct. 20, 2020, Expert Report of Glenn Vallee, Ph.D. on Infringement in Reply to Aug. 21, 2020 Rebuttal Report of Dr. Collins.
Exhibit H to Plaintiff Fuma International LLC's Memorandum of Law in Support of Plaintiff's Motion for Summary Judgment dated Oct. 20, 2020, Vuse Ciro Final Infringement Contentions Claim Chart for U.S. Pat. No. 9,532,604.
Exhibit I to Plaintiff Fuma International LLC's Memorandum of Law in Support of Plaintiff's Motion for Summary Judgment dated Oct. 20, 2020, Vuse Ciro Final Infringement Contentions Claim Chart for U.S. Pat. No. 10,334,881.
Exhibit J to Plaintiff Fuma International LLC's Memorandum of Law in Support of Plaintiff's Motion for Summary Judgment dated Oct. 20, 2020, Vuse Ciro Claim Chart for U.S. Pat. No. 9,532,604 for Fuma Expert Report on Infringement (Redacted).
Exhibit K to Plaintiff Fuma International LLC's Memorandum of Law in Support of Plaintiff's Motion for Summary Judgment dated Oct. 20, 2020, Vuse Ciro Claim Chart for U.S. Pat. No. 10,334,881 for Fuma Expert Report on Infringement (Redacted).
Defendant R.J. Reynolds Vapor Company's Motion for Summary Judgment of Non-Infringement dated Oct. 20, 2020, U.S. District Court for the Middle District of North Carolina, Civil Action Nos. 19-cv-260(lead case) and 19-cv-660.
Defendant R.J. Reynolds Vapor Company's [Proposed] Order Granting R.J. Reynolds Vapor Company's Motion for Summary Judgment of Noninfringement, U.S. District Court for the Middle District of North Carolina, Civil Action Nos. 19-cv-260(lead case) and 19-cv-660.
Defendant R.J. Reynolds Vapor Company's Memorandum in Support of Its Motion for Summary Judgment of Non-Infringement dated Oct. 20, 2020, U.S. District Court for the Middle District of North Carolina, Civil Action Nos. 19-cv-260(lead case) and 19-cv-660.
Exhibit 1 to Defendant R.J. Reynolds Vapor Company's Memorandum in Support of Its Motion for Summary Judgment of Non-Infringement dated Oct. 20, 2020, Vuse Solo PMTA Letter, Sec. H Excepts.
Exhibit 2 to Defendant R.J. Reynolds Vapor Company's Memorandum in Support of Its Motion for Summary Judgment of Non-Infringement dated Oct. 20, 2020, Vuse Ciro PMTA Letter, Sec. H Excepts.
Exhibit 3 to Defendant R.J. Reynolds Vapor Company's Memorandum in Support of Its Motion for Summary Judgment of Non-Infringement dated Oct. 20, 2020, Expert Report of Glenn Vallee, Ph.D. on Infringement in Reply to Aug. 21, 2020 Rebuttal Report of Dr. Collins with Exhibit A Excerpts.
Exhibit 4 to Defendant R.J. Reynolds Vapor Company's Memorandum in Support of Its Motion for Summary Judgment of Non-Infringement dated Oct. 20, 2020, Expert Report of Glenn Vallee, Ph.D. on Infringement with Exhibits E, F, H, I, Excerpts (Redacted).
Exhibit 5 to Defendant R.J. Reynolds Vapor Company's Memorandum in Support of Its Motion for Summary Judgment of Non-Infringement dated Oct. 20, 2020, U.S. Appl. No. 12/843,917 Certified Application File History Excepts.
Exhibit 6 to Defendant R.J. Reynolds Vapor Company's Memorandum in Support of Its Motion for Summary Judgment of Non-Infringement dated Oct. 20, 2020, U.S. Appl. No. 14/510,995 (U.S. Pat. No. 9,532,604) Certified Application File History Excepts.
Exhibit 7 to Defendant R.J. Reynolds Vapor Company's Memorandum in Support of Its Motion for Summary Judgment of Non-Infringement dated Oct. 20, 2020, U.S. Appl. No. 15/337,522 (U.S. Pat. No. 10,334,881) Certified Application File History Excepts.
Exhibit 8 to Defendant R.J. Reynolds Vapor Company's Memorandum in Support of Its Motion for Summary Judgment of Non-Infringement dated Oct. 20, 2020, Responsive Expert Report of Dr. John M. Collins with Exhibits A and B.
Plaintiff Fuma International LLC's Opposition to Defendant's Motion for Summary Judge of Non-Infringement dated Nov. 11, 2020, U.S. District Court for the Middle District of North Carolina, Civil Action Nos. 19-cv-260(lead case) and 19-cv-660.
Exhibit L to Plaintiff Fuma International LLC's Opposition to Defendant's Motion for Summary Judge of Non-Infringement dated Nov. 11, 2020, Vuse Solo G2 Final Infringement Contentions Claim Chart for U.S. Pat. No. 9,532,604.
Exhibit M to Plaintiff Fuma International LLC's Opposition to Defendant's Motion for Summary Judge of Non-Infringement dated Nov. 11, 2020, Vuse Solo G1 Final Infringement Contentions Claim Chart for U.S. Pat. No. 9,532,604.
Exhibit N to Plaintiff Fuma International LLC's Opposition to Defendant's Motion for Summary Judge of Non-Infringement dated Nov. 11, 2020, Vuse Solo G1 Claim Chart for Expert Report of Glenn Vallee, Ph.D. on Infringement of U.S. Pat. No. 9,532,604.
Exhibit O to Plaintiff Fuma International LLC's Opposition to Defendant's Motion for Summary Judge of Non-Infringement dated Nov. 11, 2020, Vuse Solo G2 Claim Chart for Expert Report of Glenn Vallee, Ph.D. on Infringement of U.S. Pat. No. 9,532,604.
Various Screenshots of Exhibit P to Plaintiff Fuma International LLC's Opposition to Defendant's Motion for Summary Judge of Non-Infringement dated Nov. 11, 2020, Fig. 2 of U.S. Pat. No. 9,532,604 Animation.
Defendant R.J. Reynolds Vapor Company's Opposition to Fuma's Motion for Summary Judgment of Literal Infringement dated Nov. 11, 2020, U.S. District Court for the Middle District of North Carolina, Civil Action Nos. 19-cv-260(lead case) and 19-cv-660.
Plaintiff Fuma International LLC's Reply in Support of Its Motion for Summary Judgment of (I) Infringement of the '881 Patent by Defendant's Vuse Solo and Vuse Ciro Products, and (II) Infringement of the '604 Patent by Defendant's Vuse Ciro Product dated Nov. 25, 2020, U.S. District Court for the Middle District of North Carolina, Civil Action Nos. 19-cv-260(lead case) and 19-cv-660.
Defendant R.J. Reynolds Vapor Company's Reply in Support of Its Motion for Summary Judgment of Non-Infringement dated Nov. 25, 2020, U.S. District Court for the Middle District of North Carolina, Civil Action Nos. 19-cv-260(lead case) and 19-cv-660.
Exhibit 9 to Defendant R.J. Reynolds Vapor Company's Reply in Support of Its Motion for Summary Judgment of Non-Infringement dated Nov. 25, 2020, File History Receipt for U.S. Appl. No. 12/843,917.
Exhibit 10 to Defendant R.J. Reynolds Vapor Company's Reply in Support of Its Motion for Summary Judgment of Non-Infringement dated Nov. 25, 2020, Defendant/Counterplaintiff R.J. Reynolds Vapor Company's Fourth Supplemental Objections and Responses to Plaintiff's Second Set of Interrogatories (Nos. 6-13) (Redacted).
Exhibit 11 to Defendant R.J. Reynolds Vapor Company's Reply in Support of Its Motion for Summary Judgment of Non-Infringement dated Nov. 25, 2020, Excerpts of Deposition Of Nicholas Gilley.
Exhibit 12 to Defendant R.J. Reynolds Vapor Company's Reply in Support of Its Motion for Summary Judgment of Non-Infringement dated Nov. 25, 2020, Vuse Advertising Samples.
Exhibit 13 to Defendant R.J. Reynolds Vapor Company's Reply in Support of Its Motion for Summary Judgment of Non-Infringement dated Nov. 25, 2020, U.S. Pat. No. 9,609,893.
Defendant R.J. Reynolds Vapor Company's Preliminary Invalidity Contentions as filed Sep. 26, 2019; United States District Court for the Middle District of North Carolina; Civil Action Nos. 19-cv-00260 and 19-cv-660.
Defendant's Sep. 26, 2019 Preliminary Invalidity Contentions Exhibit A, Claim Chart of U.S. Pat. No. 9,532,604 with CN101366554A to Wang.
Defendant's Sep. 26, 2019 Preliminary Invalidity Contentions Exhibit B, Claim Chart of U.S. Pat. No. 10,334,881 with CN101366554A to Wang.
Defendant's Sep. 26, 2019 Preliminary Invalidity Contentions Exhibit C, Claim Chart of U.S. Pat. No. 9,532,604 with CN201379072Y to Han.
Defendant's Sep. 26, 2019 Preliminary Invalidity Contentions Exhibit D, Claim Chart of U.S. Pat. No. 10,334,881 with CN201379072Y to Han.

(56) **References Cited**

OTHER PUBLICATIONS

Defendant's Sep. 26, 2019 Preliminary Invalidity Contentions Exhibit E, Claim Chart of U.S. Pat. No. 9,532,604 with US2009/0126745 to Hon.
Defendant's Sep. 26, 2019 Preliminary Invalidity Contentions Exhibit F, Claim Chart of U.S. Pat. No. 10,334,881 with US2009/0126745 to Hon.
Defendant's Sep. 26, 2019 Preliminary Invalidity Contentions Exhibit G, Claim Chart of U.S. Pat. No. 9,532,604 with CN201085044Y to Fang.
Defendant's Sep. 26, 2019 Preliminary Invalidity Contentions Exhibit H, Claim Chart of U.S. Pat. No. 10,334,881 with CN201085044Y to Fang.
Defendant's Sep. 26, 2019 Preliminary Invalidity Contentions Exhibit I, Claim Chart of U.S. Pat. No. 9,532,604 with Fifty-One.
Defendant's Sep. 26, 2019 Preliminary Invalidity Contentions Exhibit J, Claim Chart of U.S. Pat. No. 10,334,881 with Fifty-One.
Defendant's Sep. 26, 2019 Preliminary Invalidity Contentions Exhibit K, Claim Chart of U.S. Pat. No. 9,532,604 with KR808D.
Defendant's Sep. 26, 2019 Preliminary Invalidity Contentions Exhibit L, Claim Chart of U.S. Pat. No. 10,334,881 with KR808D.
Defendant's Sep. 26, 2019 Preliminary Invalidity Contentions Exhibit M, Claim Chart of U.S. Pat. No. 9,532,604 with US2009/0095311 to Han.
Defendant's Sep. 26, 2019 Preliminary Invalidity Contentions Exhibit N, Claim Chart of U.S. Pat. No. 10,334,881 with US2009/0095311 to Han.
Defendant's Sep. 26, 2019 Preliminary Invalidity Contentions Exhibit O, Claim Chart of U.S. Pat. No. 9,532,604 with U.S. Pat. No. 4,947,874 to Brooks et al.
Defendant's Sep. 26, 2019 Preliminary Invalidity Contentions Exhibit P, Claim Chart of U.S. Pat. No. 10,334,881 with U.S. Pat. No. 4,947,874 to Brooks et al.
Defendant's Sep. 26, 2019 Preliminary Invalidity Contentions Exhibit Q, Claim Chart of U.S. Pat. No. 9,532,604 with US2009/0272379 to Thorens.
Defendant R.J. Reynolds Vapor Company's Amended and Consolidated Affirmative Defenses and Amended and Consolidated Counterclaims to Complaints for Patent Infringement as filed Oct. 10, 2019; United States District Court for the Middle District of North Carolina; Civil Action Nos. 19-cv-00260 and 19-cv-660; Document 53.
Plaintiff Fuma International LLC's Responses to Defendant R.J. Reynolds Vapor Company's Amended and Consolidated Counterclaims to Complaints for Patent Infringement; Demand for Jury Trial; as filed Oct. 24, 2019; United States District Court for the Middle District of North Carolina; Civil Action Nos. 19-cv-00260 and 19-cv-660; Document 55.
R.J. Reynolds Vapor Company's Motion for Summary Judgment of Patent Unenforceability as filed Dec. 20, 2019; United States District Court for the Middle District of North Carolina; Civil Action Nos. 1:19-cv-00260 and 1:19-cv-660; Document; Document 73.
Plaintiff Fuma International LLC's Motion for Summary Judgment on Defendant R.J. Reynolds Vapor Company's Inequitable Conduct Counterclaims as filed Dec. 20, 2019; United States District Court for the Middle District of North Carolina; Civil Action Nos. 19-cv-00260 and 19-cv-660; Document 74.
Plaintiff Fuma International LLC's Memorandum of Law in Support of Motion for Summary Judgment on Defendant R.J. Reynolds Vapor Company's Inequitable Conduct Counterclaims as filed Decv. 20, 2019; United States District Court for the Middle District of North Carolina; Civil Action Nos. 19-cv-00260 and 19-cv-660; Document 75; with Exhibits (listed separately).
Plaintiff's Dec. 20, 2019 Memorandum Ex. 1, Examiner Search Notes at FUMA00000489, -546, -610.
Plaintiff's Dec. 20, 2019 Memorandum Ex. 2, Comparison of Norton and Campbell Office Actions.
Plaintiff's Dec. 20, 2019 Memorandum Ex. 3, Chart depicting the sequence and relationship of the various applications in the subject patent family.
Plaintiff's Dec. 20, 2019 Memorandum Ex. 4, RJRV-F000045828 (noting entries of Nov. 1, 2016 and Nov. 3, 2016).
Plaintiff's Dec. 20, 2019 Memorandum Ex. 5, Fuma Supplemental Response to Interrogatory 12, p. 10.
Plaintiff's Dec. 20, 2019 Memorandum Ex. 6, Dec. 4, 2019 Deposition Transcript of G. Conley.
Plaintiff's Dec. 20, 2019 Memorandum Ex. 7, Dec. 9, 2019 Deposition Transcript of M. Medley.
Plaintiff's Dec. 20, 2019 Memorandum Ex. 8, May 29, 2014 Email from Conley to Jocke (FUMA00082651-53 at -52).
Plaintiff's Dec. 20, 2019 Memorandum Ex. 9, Wikipedia Article at FUMA00000504 (describing Heating Element ('atomizer').
Plaintiff's Dec. 20, 2019 Memorandum Ex. 10, Fuma's Response to Interrogatory 15 at p. 5-6.
Plaintiff's Dec. 20, 2019 Memorandum Ex. 11, Jul. 31, 2009 Sketches (FUMA00007752).
Plaintiff's Dec. 20, 2019 Memorandum Ex. 12, Deposition Exhibit No. DX-2A, Production No. FUMA00007750 (showing "Batting" annotation from Conley deposition).
Plaintiff's Dec. 20, 2019 Memorandum Ex. 13, RJRV-F000154458-72 at -71, -64, "Horizon 3 Vapor, The Open Innovation Solution"; Id. at—RJRV-F000154460 ("Open Innovation (Proudly Found Elsewhere)".
Plaintiff's Dec. 20, 2019 Memorandum Ex. 14, Jun. 29, 2010 Email from Dennis Potter (RJRV-F000685773).
Plaintiff's Dec. 20, 2019 Memorandum Ex. 15, Sep. 19, 2019 Declaration of Wang Shanhong ("Wang Declaration").
Plaintiff's Dec. 20, 2019 Memorandum Ex. 16, Jul. 22, 2010 D. Potter Email (RJRV-F000687003).
Defendant's Memorandum in Support of Motion for Summary Judgment of Patent Unenforceability as filed Dec. 20, 2019; United States District Court for the Middle District of North Carolina; Civil Action Nos. 19-cv-00260 and 19-cv-660; Document 76; with Exhibits (listed separately).
Defendant's Dec. 20, 2019 Memorandum Ex. 1, Updated U.S. Pat. No. 9,532,604 Patent Family Tree.
Defendant's Dec. 20, 2019 Memorandum Ex. 2, Deposition Exhibit No. DX 3; Production No. FUMA00000019-37; U.S. Pat. No. 9,532,604 Patent issued Jan. 3, 2017 to Conley et al. (Certified on Feb. 8, 2019).
Defendant's Dec. 20, 2019 Memorandum Ex. 3, Production No. FUMA00083194-12; U.S. Pat. No. 10,334,881 Patent issued Jul. 2, 2019 to Coney et al.
Defendant's Dec. 20, 2019 Memorandum Ex. 4, Deposition Exhibit No. DX 19; Production No. FUMA00000338-55; U.S. Pat. No. 8,897,628 Patent issued Nov. 25, 2014 to Coney et al. (Certified on Feb. 8, 2019).
Defendant's Dec. 20, 2019 Memorandum Ex. 5. FUMA0000302-36 U.S. Appl. No. 12/843,917, filed Jul. 27, 2010 to Conley et al. (Certified on Feb. 7, 2019).
Defendant's Dec. 20, 2019 Memorandum Ex. 6, Fuma's Second Supplemental Response to Third Set of Interrogatories dated Dec. 12, 2019, Interrogatory 12.
Defendant's Dec. 20, 2019 Memorandum Ex. 7, Excerpts from G. Conley Deposition Transcript.
Defendant's Dec. 20, 2019 Memorandum Ex. 8, Excerpts from D. Hillenbrandt Deposition Transcript.
Defendant's Dec. 20, 2019 Memorandum Ex. 9, Excerpts from R. Conley Deposition Transcript.
Defendant's Dec. 20, 2019 Memorandum Ex. 10, Excerpts from M. Medley Deposition Transcript.
Defendant's Dec. 20, 2019 Memorandum Ex. 11, Excerpts from R. Jocke Deposition Transcript.
Defendant's Dec. 20, 2019 Memorandum Ex. 12, Excerpts from T. Martin Deposition Transcript.
Defendant's Dec. 20, 2019 Memorandum Ex. 13, Deposition Exhibit No. DX 24; Production No. FUMA00012195; Press release announcing Fifty-One product.

(56) **References Cited**

OTHER PUBLICATIONS

Defendant's Dec. 20, 2019 Memorandum Ex. 14, Deposition Exhibit No. DX 25; Production No. FUMA00010920; Advertising of Fifty-One product.
Defendant's Dec. 20, 2019 Memorandum Ex. 15, Deposition Exhibit No. DX 1; Production No. FUMA00012107-16; PowerPoint advertising of Fifty-One product.
Defendant's Dec. 20, 2019 Memorandum Ex. 16, Production No. FUMA00000477-87; Jul. 16, 2013 Office Action and Examiner's IDS.
Defendant's Dec. 20, 2019 Memorandum Ex, 17, Production No. RJRV-F000061285-92; US Publication No. 2009/0272379A1 issued Nov. 5, 2009 to Thorens.
Defendant's Dec. 20, 2019 Memorandum Ex. 18, Production No. RJRV-F000061357-67; U.S. Pat. No. 4,284,089 issued Aug. 18, 1981 to Ray.
Defendant's Dec. 20, 2019 Memorandum Ex. 19, Production No. FUMA00000510-31; Oct. 16, 2013 Amendment and Response from '917 prosecution.
Defendant's Dec. 20, 2019 Memorandum Ex. 20, Production No. FUMA00000532-41; Dec. 4, 2013 Office Action.
Defendant's Dec. 20, 2019 Memorandum Ex. 21, Production No. FUMA00000549-65; Feb. 3, 2014 Amendment and Response to Dec. 4, 2013 Office Action.
Defendant's Dec. 20, 2019 Memorandum Ex. 22, Production No. FUMA00000567-79; Feb. 19, 2014 Advisory Action rejecting proposed amendments.
Defendant's Dec. 20, 2019 Memorandum Ex. 23, Production No. FUMA00082796-810; Mar. 28, 2014 Correspondence.
Defendant's Dec. 20, 2019 Memorandum Ex. 24, Deposition Exhibit No. DX 29; Oct. 3, 2014 letter from Jocke to named inventors (Ohio State Court Exhibit FF).
Defendant's Dec. 20, 2019 Memorandum Ex. 25, Production No. FUMA00082593-606; Jun. 25, 2014 email (Deposition Exhibit No. DX 38) and draft response.
Defendant's Dec. 20, 2019 Memorandum Ex. 26, Deposition Exhibit No. DX 39; Production No. FUMA00082681-82; Jul. 31, 2014 Jocke letter to G. Conley and D. Hillenbrandt.
Defendant's Dec. 20, 2019 Memorandum Ex. 27, Production No. FUMA00000038-90; '955 Application and Application Data Sheet from '604 patent prosecution.
Defendant's Dec. 20, 2019 Memorandum Ex. 28, Production Nos. FUMA00000091-102 and FUMA00000128-39; IDS's in '604 patent prosecution.
Defendant's Dec. 20, 2019 Memorandum Ex. 29, Production No. FUMA00000118-27; Jan. 15, 2016 Office Action in '604 patent prosecution.
Defendant's Dec. 20, 2019 Memorandum Ex. 30, Production No. FUMA00082530-31; Jan. 25, 2016 Letter from Jocke to Conley et al. providing Jan. 15, 2016 Office Action.
Defendant's Dec. 20, 2019 Memorandum Ex. 31, Production No. FUMA00017414; Jun. 30, 2016 Letter from Jocke to Conley et al. providing draft Response to Jan. 15, 2016 Office Action.
Defendant's Dec. 20, 2019 Memorandum Ex. 32, Deposition Exhibit No. DX 36; Production No. FUMA00063611-72; 522 Application and Application Data Sheet from '881 patent prosecution.
Defendant's Dec. 20, 2019 Memorandum Ex. 33, Production No. FUMA00063679-80; Transmittal of Power of Attorney for Thomas Martin, signed by Conley on May 31, 2018 during '881 patent prosecution.
Defendant's Dec. 20, 2019 Memorandum Ex. 34, Deposition Exhibit No. DX 43; Production No. FUMA00064785-86; IDS Narrative accompanying IDS filed on May 1, 2019 in '881 patent prosecution.
Defendant's Dec. 20, 2019 Memorandum Ex. 35, Production No. FUMA00083076-78; Jul. 29, 2010 Invoice from Walker & Jocke to Conley confirming disclosure meeting Case.
Defendant's Dec. 20, 2019 Memorandum Ex. 36, Deposition Exhibit No. DX 14; Production No. FUMA00082529; Partial transcription of Jul. 2010 inventor disclosure meeting between Conley and Medley.
Defendant's Dec. 20, 2019 Memorandum Ex. 37, Deposition Exhibit No. DX 15; Production No. FUMA00081603-04; Jul. 20, 2010 and Jul. 27, 2010 Emails from Medley to GC Fuma, cc Medley.
Defendant's Dec. 20, 2019 Memorandum Ex. 38, Production No. FUMA00081651; Oct. 15, 2013 Email from Conley to Jocke.
Defendant's Dec. 20, 2019 Memorandum Ex. 39, Production Nos. FUMA00006121-25, FUMA00006348, FUMA00006353-54, FUMA00006399, FUMA00006410, FUMA00006415, FUMA00006468-69, FUMA00006471-72, FUMA00006480-81, FUMA00006500-04; Excerpts from Conley's Ohio May 2016 testimony.
Defendant's Dec. 20, 2019 Memorandum Ex. 40, Production No. RJRV-F000044730-37; Exhibit U referenced in Conley's Ohio May 2016 testimony.
Defendant's Dec. 20, 2019 Memorandum Ex. 41, Production No. RJRV-F000044941-45082; Excerpts from Campbell's Ohio Jun. 2016 transcript.
Defendant's Dec. 20, 2019 Memorandum Ex. 42, Production No. FUMA00081032-81041; Campbell Declaration.
Defendant's Dec. 20, 2019 Memorandum Ex. 43, Deposition Exhibit No. DX 34; Production No. FUMA00082521-28; Sep. 7, 2016 Letter from Jocke to Conley et al. regarding filing of declarations.
Defendant's Dec. 20, 2019 Memorandum Ex. 44, Deposition Exhibit No. DX 22; Production No. FUMA00077839-44; Nov. 2016 Email String.
Defendant's Dec. 20, 2019 Memorandum Ex. 45, Deposition Exhibit No. DX 21; Production No. FUMA00000228-34; Inventor Declarations filed on Nov. 15, 2016 in 604 patent prosecution.
Defendant's Dec. 20, 2019 Memorandum Ex. 46, Deposition Exhibit No. DX 16; Production No. FUMA00000503-09; File history Wikipedia article on "Electronic cigarette".
Defendant's Dec. 20, 2019 Memorandum Ex. 47, Production Nos. RJRV-F000062080-130; RJRV000062132-38; Wang Declaration (Chinese) and exhibits, and English translation of Wang Declaration.
Defendant's Dec. 20, 2019 Memorandum Ex. 48, Production No. RJRV-F000694624-33; Top Down View of Cartridges 1-3.
Defendant's Dec. 20, 2019 Memorandum Ex. 49, Production No. FUMA00082588; Jul. 10, 2013 Letter from Parmelee to Conley regarding prosecution of'813 Application ('628 patent).
Defendant's Dec. 20, 2019 Memorandum Ex. 50, Production Nos. FUMA00000419-22; FUMA00000469-74; FUMA00000486-87; FUMA00000542; FUMA00000608; IDS's in the '917 Application prosecution.
Defendant's Dec. 20, 2019 Memorandum Ex. 51, Production Nos. FUMA00000714-19; FUMA00000739; FUMA00000742-45; FUMA00000761-65; FUMA00000788-92; IDS's in the '628 patent prosecution.
Defendant's Dec. 20, 2019 Memorandum Ex. 52, Production Nos. FUMA00063914-19; FUMA00064051-54; FUMA00064093; Original IDS and First Supplemental IDS filed in '881 patent prosecution.
Defendant's Dec. 20, 2019 Memorandum Ex. 53, Deposition Exhibit No. DX2A; Production No. FUMA00007750-Modified; Sketch of Fifty-One Duo with location of batting material identified by Conley.
Defendant's Dec. 20, 2019 Memorandum Ex. 54, Declaration of John Collins with Exhibits A-J.
Opening Claim Construction Brief of Defendant R.J. Reynolds Vapor Company as filed Jan. 13, 2020; United States District Court for the Middle District of North Carolina; Civil Action Nos. 1:19-cv-00260 and 1:19-cv-660; Document 82; with Exhibits (listed separately).
Defendant's Jan. 13, 2020 Brief Ex. 1, Email Chain between Dirk Thomas and Laura Beth Miller regarding the parties' preliminary claim constructions, from Oct. 29, 2019 to Nov. 1, 2019.
Defendant's Jan. 13, 2020 Brief Ex. 2, Production No. RJRVF900000037-42; Shorter Oxford English Dictionary (6th Edition), Excerpt for "couple," "fasten," and "link".
Defendant's Jan. 13, 2020 Brief Ex. 3, Production No. RJRVF900000043-48; Merriam-Webster's Collegiate Dictionary (10th Edition), Excerpt for "couple," "fasten," and "link".

(56) **References Cited**

OTHER PUBLICATIONS

Defendant's Jan. 13, 2020 Brief Ex. 4, Production No. FUMA00000581-92; Certified File History for U.S. Appl. No. 12/843,917: Mar. 28, 2014 Amendment Filed with a Request for Continued Examination (RCE) and Remarks.
Defendant's Jan. 13, 2020 Brief Ex. 5, Production No. RJRVF000044605-06; Email Chain between Ralph Jocke and Greg Conley regarding Patent Application Response, dated Jan. 31, 2014 and Feb. 3, 2014.
Defendant's Jan. 13, 2020 Brief Ex. 6, Production No. FUMA00000151-75; Certified File History for U.S. Appl. No. 14/510,955 (excerpts), including: Jul. 11, 2016 Amendments and Response.
Defendant's Jan. 13, 2020 Brief Ex. 7, Production No. RJRVF000044766-67; Oct. 11, 2013 Email from Ralph Jocke to Greg Conley regarding Draft of Response to Office Action for '917 Application.
Defendant's Jan. 13, 2020 Brief Ex. 8, Production No. RJRVF000044768; Oct. 15, 2013 Email from Greg Conley to Ralph Jocke regarding Draft Response to Office Action for '917 Application.
Defendant's Jan. 13, 2020 Brief Ex. 9, Production No. FUMA00000599-607; Certified File History for U.S. Appl. No. 12/843,917: May 6, 2014 Non-Final Rejection.
Defendant's Jan. 13, 2020 Brief Ex. 10, Deposition Exhibit No. 33; Production No. FUMA00082651-52; Email Chain between Greg Conley and Ralph Jocke regarding the '813 and '917 Applications, dated May 29, 2014 and Jun. 4, 2014.
Defendant's Jan. 13, 2020 Brief Ex. 11, Excerpts from Ralph Jocke Deposition Transcript.
Plaintiff Fuma International LLC's Opening Claim Construction Brief as filed Jan. 13, 2020; United States District Court for the Middle District of North Carolina; Civil Action Nos. 1:19-cv-00260 and 1:19-cv-660; Document 83; with Exhibit (listed separately).
Plaintiff's Jan. 13, 2020 Brief Ex. A, (showing independent claims with highlighted terms RJR has proposed for construction).
Reynolds's Memorandum in Opposition to Plaintiff's Motion for Summary Judgment as filed Jan. 21, 2020; United States District Court for the Middle District of North Carolina; Civil Action Nos. 1:19-cv-00260 and 1:19-cv-660; Document 84; with Exhibits (listed separately).
Defendant's Jan. 21, 2020 Memorandum Ex. 1, Production No. FUMA00006410, FUMA00006487-88; Excerpt from Transcript of Proceedings, *Steiger* v. *Conley*, No. 14CIV-0386 (State of Ohio, Medina County Common Pleas Court, May 16, 2016).
Defendant's Jan. 21, 2020 Memorandum Ex. 2, Excerpt from D. Hillenbrandt Deposition Transcript.
Defendant's Jan. 21, 2020 Memorandum Ex. 3, School that Awarded MBA to Cat Sued, nbcnews.com, http://www.nbcnews.com/id/6664906/ns/ us_news-crime_and_courts/t/school-awarded-mba-cat-sued/#.XiCJ4MhKiUk (last updated Dec. 7, 2004).
Defendant's Jan. 21, 2020 Memorandum Ex. 4, Declaration of Atif Yardimici, dated Jan. 21, 2020.
Defendant's Jan. 21, 2020 Memorandum Ex. 5, Second Declaration of John Collins, dated Jan. 21, 2020.
Defendant's Jan. 21, 2020 Memorandum Ex. 6, Production No. FUMA00004119-127; Fuma International LLC's Marketing Material.
Defendant's Jan. 21, 2020 Memorandum Ex. 7, "Slideshow" View Excerpts of Horizon 3 Vapor PowerPoint.
Plaintiff Fuma International LLC's Memorandum in Opposition to Defendant's Motion for Summary Judgment of Patent Unenforceability as filed Jan. 21, 2020; United States District Court for the Middle District of North Carolina; Civil Action Nos. 1:19-cv-00260 and 1:19-cv-660; Document 85; with Exhibits (listed separately).
Plaintiff's Jan. 21, 2020 Memorandum Ex. A, Jul. 19, 2010 Email from D. Potter to G. Conley.
Plaintiff's Jan. 21, 2020 Memorandum Ex. B, Jan. 17, 2020 Declaration of Dr. Glen Vallee.
Plaintiff's Jan. 21, 2020 Memorandum Ex. C, Smoke Anywhere Assurance of Voluntary Compliance, State of Florida.
Plaintiff's Jan. 21, 2020 Memorandum Ex. D, U.S. Pat. No. 8,910,639 issued Dec. 16, 2014 to Chang et al.
Plaintiff's Jan. 21, 2020 Memorandum Ex. E, Jan. 9, 2011 ARD Test Memo—Blu (RJRV-F000051001-14, Redacted).
Plaintiff's Jan. 21, 2020 Memorandum Ex. F, May 11, 2006 Memo (RJRV-F000051785-90, Redacted.
Plaintiff's Jan. 21, 2020 Memorandum Ex. G, Jan. 6, 2012 ARD Test Memo—Njoy (RJRV-F000051791-800, Redacted).
Plaintiff's Jan. 21, 2020 Memorandum Ex. H, RJR Ruyan Photos (RJRV-F000051919-976).
Plaintiff's Jan. 21, 2020 Memorandum Ex. I, Jan. 6, 2012 ARD Test Memo—Finiti (RJRV-F000052015-018, Redacted).
Plaintiff's Jan. 21, 2020 Memorandum Ex. J, Sep. 14, 2006 Memo—Ruyan (RJRV0F000053225, Redacted).
Plaintiff's Jan. 21, 2020 Memorandum Ex. K, Jan. 24, 2012 ARD Test Memo—Bloog (RJRV-F0000535930-38, Redacted).
Plaintiff's Jan. 21, 2020 Memorandum Ex. L, Aug. 25, 2009 Meeting Minutes, Reynolds Innovations, Inc. (RJRV-F000053359-62, Redacted).
Plaintiff's Jan. 21, 2020 Memorandum Ex. M, U.S. Patent Publication No. 2014/0060554A1 published Mar. 6, 2014 to Collett et al.
Plaintiff's Jan. 21, 2020 Memorandum Ex. N, U.S. Pat. No. 4,284,089 issued Aug. 18, 1981 to Ray.
Plaintiff's Jan. 21, 2020 Memorandum Ex. O, Renewed Request for Correction of Inventorship (FUMA00063955,69).
Plaintiff's Jan. 21, 2020 Memorandum Ex. P, Excerpted Dec. 6, 2019 Transcript of Rebecca Conely.
Plaintiff's Jan. 21, 2020 Memorandum Ex. Q, Excerpted Dec. 11, 2019 Deposition Transcript of T. Martin.
Responsive Claim Construction Brief of Defendant R.J. Reynolds Vapor Company as filed Feb. 5, 2020; United States District Court for the Middle District of North Carolina; Civil Action Nos. 1:19-cv-00260 and 1:19-cv-660; Document 89; with Exhibits (listed separately).
Defendant's Feb. 5, 2020 Brief Ex. 1, Excerpts from Merriam-Webster's Collegiate Dictionary (10th Edition, 1996).
Defendant's Feb. 5, 2020 Brief Ex. 2, Excerpt from Cambridge Dictionary of American English (2000).
Plaintiff Fuma International LLC's Responsive Claim Construction Brief as filed Feb. 5, 2020; United States District Court for the Middle District of North Carolina; Civil Action Nos. 1:19-cv-00260 and 1:19-cv-660; Document 90; with Exhibit (listed separately).
Plaintiff's Feb. 5, 2020 Brief Ex. A, U.S. Pat. No. 5,249,586 issued Oct. 5, 1993 to Morgan et al.
Order as issued Mar. 6, 2020; United States District Court for the Middle District of North Carolina; Civil Action Nos. 1:19-cv-00260 and 1:19-cv-660; Document 92.
R.J. Reynolds Vapor Company's Motion to Reconsider Order (Dkt.92) Granting Motion for Summary Judgment as filed Mar. 20, 2020; United States District Court for the Middle District of North Carolina; Civil Action Nos. 1:19-cv-00260 and 1:19-cv-660; Document 93.
Defendant R.J. Reynolds Vapor Company's Brief in Support of Its Motion for Reconsideration as filed Mar. 20, 2020; United States District Court for the Middle District of North Carolina; Civil Action Nos. 1:19-cv-00260 and 1:19-cv-660; Document 94.
Claim Construction Order issued Mar. 23, 2020; United States District Court for the Middle District of North Carolina; Civil Action Nos. 1:19-cv-00260 and 1:19-cv-660; Document 95.
Defendant R.J. Reynolds Vapor Company's Final Invalidity Contentions with Exhibits as filed Apr. 24, 2020; United States District Court for the Middle District of North Carolina; Civil Action Nos. 19-cv-00260 and 19-cv-660.
Defendant's Apr. 24, 2020 Final Invalidity Contentions Exhibit 1, Claim Chart of U.S. Pat. No. 9,532,604 with CN101366554A to Wang.
Defendant's Apr. 24, 2020 Final Invalidity Contentions Exhibit 2, Claim Chart of U.S. Pat. No. 10,334,881 with CN101366554A to Wang.
Defendant's Apr. 24, 2020 Final Invalidity Contentions Exhibit 3, Claim Chart of U.S. Pat. No. 9,532,604 with CN201085044Y to Fang.

(56) **References Cited**

OTHER PUBLICATIONS

Defendant's Apr. 24, 2020 Final Invalidity Contentions Exhibit 4, Claim Chart of U.S. Pat. No. 10,334,881 with CN201085044Y to Fang.
Defendant's Apr. 24, 2020 Final Invalidity Contentions Exhibit 5, Claim Chart of U.S. Pat. No. 9,532,604 with Fifty-One.
Defendant's Apr. 24, 2020 Final Invalidity Contentions Exhibit 6, Claim Chart of U.S. Pat. No. 10,334,881 with Fifty-One.
Defendant's Apr. 24, 2020 Final Invalidity Contentions Exhibit 7, Claim Chart of U.S. Pat. No. 9,532,604 with US2009/0095311 to Han.
Defendant's Apr. 24, 2020 Final Invalidity Contentions Exhibit 8, Claim Chart of U.S. Pat. No. 10,334,881 with US2009/0095311 to Han.
Defendant's Apr. 24, 2020 Final Invalidity Contentions Exhibit 9, Claim Chart of U.S. Pat. No. 9,532,604 with US2009/0272379 to Thorens et al.
Order as issued May 19, 2020; United States District Court for the Middle District of North Carolina; Civil Action Nos. 1:19-cv-00260; Document 100.
Transcript of Summary Judgement Motion Hearing dated Apr. 27, 2021, Civil Action Nos. 19-cv-260 (lead case) and 19-cv-660.
Submission of Defendant's Powerpoint Presentations Published During the Summary Judgement Hearing dated Apr. 29, 2021 and Exhibits A and B.
Defendant R.J. Reynolds Vapor Company's Motion to Reconsider Order (DKT. 139) Granting Motion for Summary Judgement dated Jun. 1, 2021, Civil Action Nos. 19-cv-260 (lead case) and 19-cv-660.
Defendant R.J. Reynolds Vapor Company's Brief in Support of Its Motion for Reconsideration dated Jun. 1, 2021, Civil Action Nos. 19-cv-260 (lead case) and 19-cv-660.
Plaintiff Fuma International LLC's Opposition to R.J. Reynold's Motion for Reconsideration of the Court's Summary Judgement Order on Infringement dated Jun. 22, 2021, Civil Action Nos. 19-cv-260 (lead case) and 19-cv-660.
Defendant R.J. Reynolds Vapor Company's Reply in Support of Its Motion for Reconsideration dated Jul. 6, 2021, Civil Action Nos. 19-cv-260 (lead case) and 19-cv-660.
Order dated Jul. 28, 2021, U.S. District Court for the Middle District of North Carolina, Civil Action Nos. 19-cv-260 (lead case) and 19-cv-660.
Memorandum and Order dated May 24, 2021, U.S. District Court for the Middle District of North Carolina, Civil Action Nos. 19-cv-260 (lead case) and 19-cv-660.

* cited by examiner

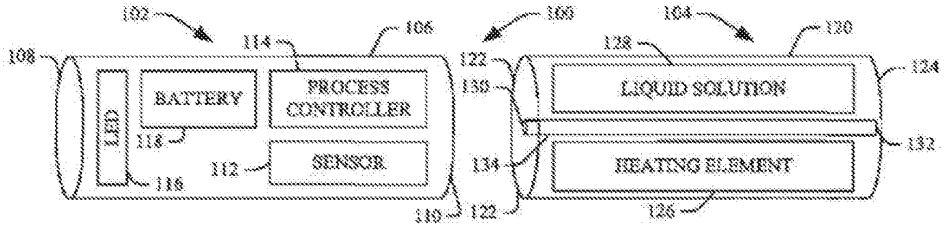
102
114
106
100
104
128
130
108
122
124
BATTERY
PROCESS CONTROLLER
LIQUID SOLUTION
LED
118
132
112
SENSOR
134
HEATING ELEMENT
116
110
122
126

FIG. 1

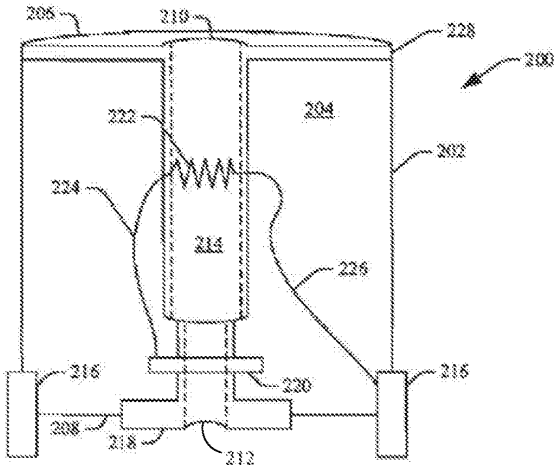
206
210
228
200
222
204
202
224
214
226
216
220
216
208
218
212

FIG. 2

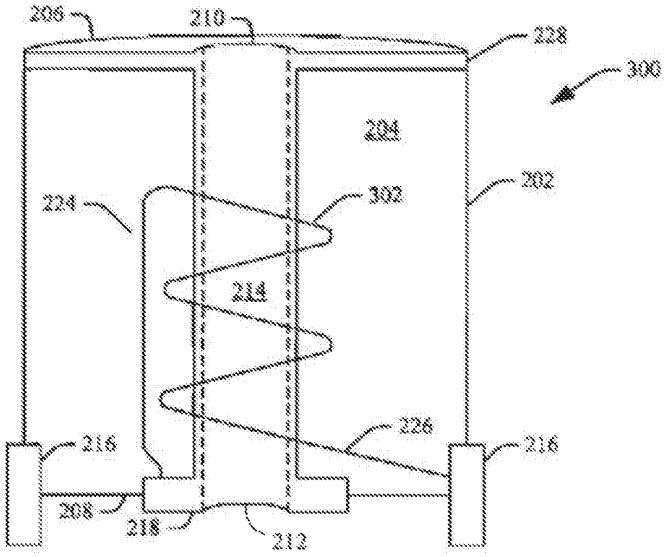

FIG. 3

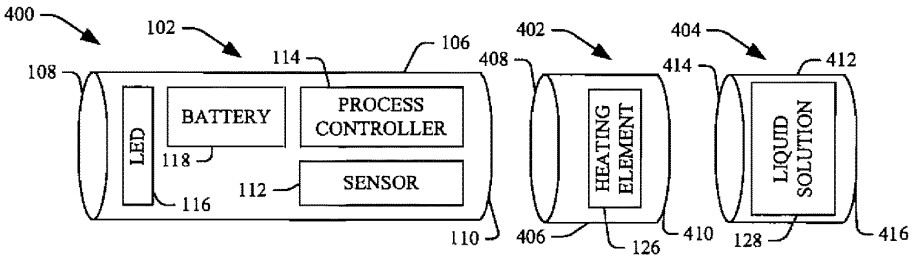
400
102
114
106
402
404
108
408
414
412
LED
BATTERY
PROCESS CONTROLLER
118
112
SENSOR
116
110
HEATING ELEMENT
406
126
410
LIQUID SOLUTION
128
416

FIG. 4

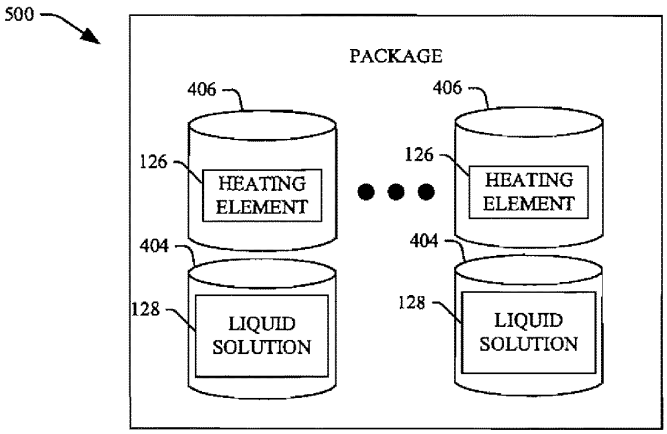
500
PACKAGE
406
406
126
HEATING ELEMENT
126
HEATING ELEMENT
404
404
128
LIQUID SOLUTION
128
LIQUID SOLUTION

FIG. 5

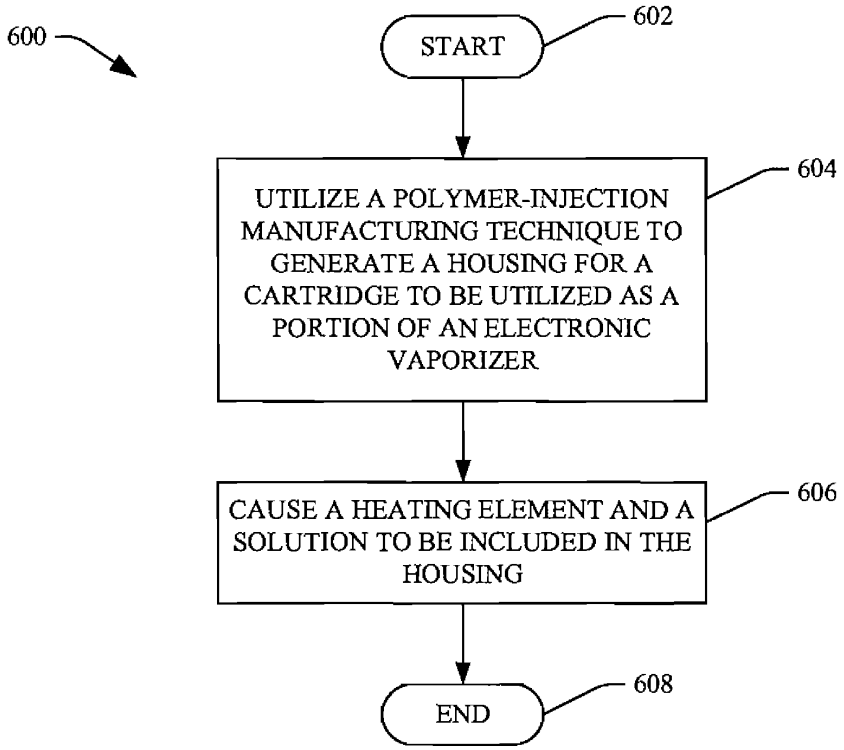
600
START
602
UTILIZE A POLYMER-INJECTION MANUFACTURING TECHNIQUE TO GENERATE A HOUSING FOR A CARTRIDGE TO BE UTILIZED AS A PORTION OF AN ELECTRONIC VAPORIZER
604
CAUSE A HEATING ELEMENT AND A SOLUTION TO BE INCLUDED IN THE HOUSING
606
END
608

FIG. 6

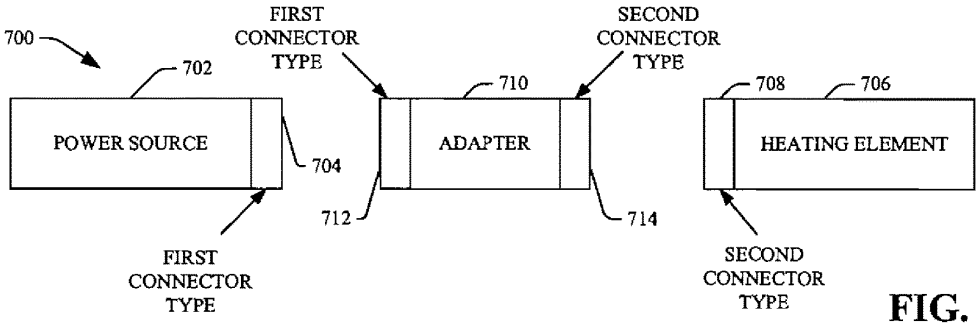
700
702
FIRST CONNECTOR TYPE
710
SECOND CONNECTOR TYPE
708
706
POWER SOURCE
704
ADAPTER
HEATING ELEMENT
712
714
FIRST CONNECTOR TYPE
SECOND CONNECTOR TYPE

FIG. 7

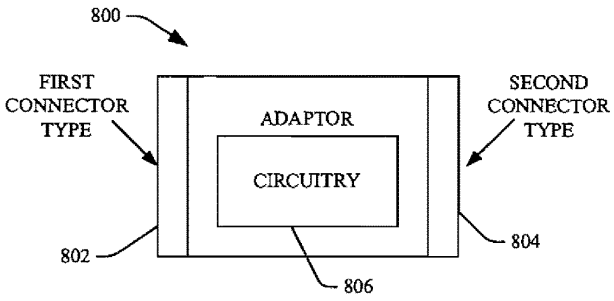
800
FIRST CONNECTOR TYPE
ADAPTOR
SECOND CONNECTOR TYPE
CIRCUITRY
802
804
806

FIG. 8

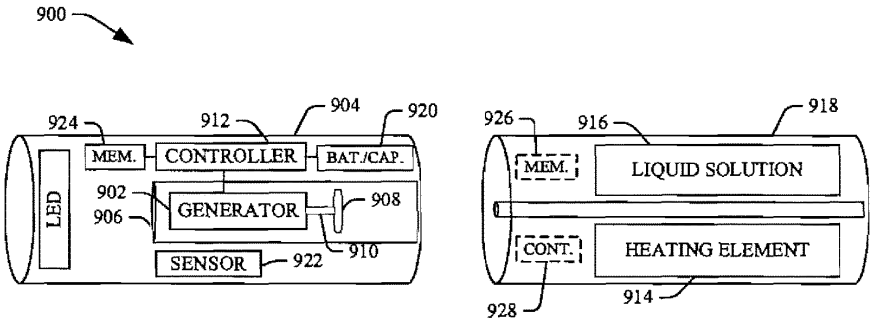
900
924
912
904
920
MEM.
CONTROLLER
BAT./CAP.
LED
902
906
GENERATOR
908
910
SENSOR
922
926
916
918
MEM.
LIQUID SOLUTION
CONT.
HEATING ELEMENT
928
914

FIG. 9

ELECTRONIC VAPORIZER

CONTINUATION DATA

This Application is a continuation of U.S. application Ser. No. 15/377,522 filed Dec. 13, 2016, which is a continuation of U.S. application Ser. No. 14/510,955 filed Oct. 9, 2014, which is a continuation of U.S. application Ser. No. 13/594,813, filed Aug. 25, 2012, which is a non-provisional of U.S. Provisional Application No. 61/527,434 filed Aug. 25, 2011 and which is a continuation-in-part of U.S. application Ser. No. 12/843,917 filed Jul. 27, 2010, which is a non-provisional of U.S. Provisional Application Nos. 61,273,097 filed Jul. 31, 2009 and 61/271,819 filed Jul. 27, 2009. All these applications are hereby incorporated herein by reference in their entirety.

BACKGROUND

Electronic cigarettes (also referred to as e-cigarettes or personal vaporizers) are generally battery-powered devices that are configured to deliver a vapour that comprises nicotine to an individual. Conventional electronic cigarette designs generally include a battery, a heating element, and a mouthpiece. The mouthpiece includes a liquid solution that comprises nicotine, and the battery provides power to the heating element, which in turn operates to vaporize the solution. Accordingly, when the user places the mouthpiece in her mouth and draws from the mouthpiece, the user receives vaporized nicotine. Due to the ever-increasing taxes on tobacco products, popularity of electronic cigarettes is expected to continue to correspondingly increase.

SUMMARY

The following is a brief summary of subject matter that is described in greater detail herein. This summary is not intended to be limiting as to the scope of the claims.

Described herein are various aspects generally pertaining to electronic vaporizers, and more particularly pertaining to cartridges that comprise heating elements configured to vaporize a solution. In an exemplary embodiment, a cartridge configured for utilization in connection with an electronic vaporizer comprises a housing that has an interior, a first end, and a second end. The housing is constructed of one of a polymer, wood, ceramic or any combination thereof. The cartridge can also include a heating element that resides in the interior of the housing. The cartridge can be manufactured as a single assembly or can be designed so that the cartridge can be manufactured as a multi-piece assembly. The cartridge also comprises a solution that is positioned proximate to the heating element. The heating element is configured to vaporize the solution responsive to receiving power from a power source (e.g., a battery). Pursuant to an example, the cartridge can be designed for utilization as a portion of an electronic cigarette. Accordingly, the solution may comprise nicotine or other components. Furthermore, the solution can be configured such that the vapor has a flavor when received by a user as well as other ingredients.

Additionally, an adapter is described herein, wherein the adapter is configured to electrically or electronically couple a power source (such as a battery) having a first configuration with a heating element having a second configuration. Specifically, manufacturers of vaporizers generally manufacture a power source and a heating element in a proprietary manner, such that only a heating element provided by the manufacturer can be electrically or electronically coupled to a power source provided by the manufacturer. Typically, the power source (battery) is significantly more expensive than associated cartridges, and once a user purchases a power source they may not wish to purchase a different power source from a different manufacturer even if the tastes of the user change over time. The adapters described herein are configured to electrically or electronically couple power sources from a first manufacturer with a heating element from a second manufacturer.

The aforementioned adapter can provide for air flow (both direct and indirect), electrical and or electronic connection, data connections as well as power or an external heating source. The adapter may also incorporate onboard circuitry and/or sensors for collecting data from the adapter.

Other aspects will be appreciated upon reading and understanding the attached figures and description.

BRIEF DESCRIPTION OF THE DRAWINGS

FIG. **1** is a functional block diagram of an exemplary electronic vaporizer.

FIG. **2** is an exemplary configuration of a cartridge for utilization in an electronic vaporizer.

FIG. **3** is an exemplary configuration of a cartridge for utilization in an electronic vaporizer.

FIG. **4** is a functional block diagram of an exemplary electronic vaporizer.

FIG. **5** is a functional block diagram of an exemplary package of cartridges.

FIG. **6** is a flow diagram illustrating an exemplary methodology for manufacturing a cartridge for employment in an electronic vaporizer.

FIG. **7** is a functional block diagram of an exemplary adaptor.

FIG. **8** is a functional block diagram of an exemplary adaptor.

FIG. **9** is a functional block diagram of an exemplary electronic vaporizer that includes a power harvesting device.

DETAILED DESCRIPTION

Various technologies pertaining to electronic vaporizers will now be described with reference to the drawings, where like reference numerals represent like elements throughout. In addition, several functional block diagrams of exemplary electronic vaporizers, cartridges, and/or adapters are illustrated and described herein for purposes of explanation; however, it is to be understood that functionality that is described as being carried out by certain components of the electronic vaporizers may be performed by multiple separate components. Similarly, for instance, a component may be configured to perform functionality that is described as being carried out by multiple components.

With reference to FIG. **1**, an exemplary electronic vaporizer **100** is illustrated. Pursuant to an example, the electronic vaporizer **100** may be an electronic cigarette that is configured to deliver a vaporized nicotine solution to a user thereof. It is to be understood, however, that the electronic vaporizer **100** may be utilized for other purposes, including deliverance of various vaporized solutions to the user for recreational or medicinal purposes.

The electronic vaporizer **100** comprises a power source **102** and a cartridge **104**. The power source **102** and the cartridge **104** are configured to be mechanically and electrically coupled to one another. For example, the cartridge **104** may comprise an electrically conductive threaded fastener, and the power source **102** may comprise an electri-

cally conductive threaded receiver. The threaded fastener and the threaded receiver can be coupled to one another, thereby mechanically and electrically coupling the power source **102** with the cartridge **104**. Of course, other types of connection mechanisms that can mechanically and electrically couple the power source **102** with the cartridge **104** are contemplated and are intended to fall under the scope of the hereto-appended claims. These include magnetic connection mechanisms, snaps, twist caps, push on connections, gasketed connections, quick connection mechanisms, turn lock mechanisms, t-bar connections, etc.

The power source **102** comprises a housing **106**, which may be manufactured from a metal, a polymer, a ceramic, or some other suitable material. As used herein, a "polymer" can refer to a formulation of manufactured materials comprising plastics, PVC, and/or some other compound that derives from the classification of a polymer or polymer derivative. A "ceramic" refers to a compound that is classified or derivative of such compound that are derived from clay or man-made materials that are listed in a suitable classification scheme as being a ceramic, which may include compounds that are derived with some portion of the compound being ceramic in nature that is a blended or compounded material.

In the example shown and described with respect to FIG. **1**, the housing **106** is cylindrical in nature. It is to be understood, however, that the housing **106** may be any suitable shape. As shown, the housing **106** comprises a first end **108** and a second end **110** that is opposite the first end **108**, and also includes an interior. While not shown, the second end **110** can comprise an aperture, wherein the aperture is configured to receiver airflow from a user. A switch/sensor **112** resides on the interior of the housing **106**. The power source **102** also includes a process controller **114** that is in electrical communication with the switch/sensor **112**. The process controller **114**, for example, can be a microchip that is configured to cause the power source **102** to operate as desired when the electronic vaporizer **100** is utilized by a user. A light emitting diode (LED) **116** is positioned proximate to the first end **108** of the housing **106**. A battery **118** resides in the interior of the housing **106**, and is electrically coupled to the LED **116**, the process controller **114**, and the switch/sensor **112**. The process controller **114** controls operation of the LED **116** based at least in part upon output of the switch/sensor **112**.

The cartridge **104** comprises a housing **120** that has an interior. The cartridge **104** also comprises a first end **122** and a second end **124**, which may be considered as a portion of the housing **120** or apart from the housing **120**. The housing **120** of the cartridge is manufactured from a non-metallic material, such as a polymer material or a ceramic material. In an example, the polymer may be a conductive polymer. As shown, the housing **120** is cylindrical in shape. It is to be understood, however, that the housing **120** may be of some other suitable shape. Moreover, the housing **120** may comprise only a cartridge wall (that can be cylindrical as well as other shapes). In another example, the housing **120** may comprise the cylindrical wall and two end-caps, all constructed of the polymer material or the ceramic material. In still yet another embodiment, the housing **120** may comprise the cartridge wall and a single end-cap. One or more end-caps described herein may be constructed from conductive material, such as metal, a conductive polymer, or the like.

A heating element **126** resides in the interior of the housing **120**. The heating element **126** may be or include any suitable technology for outputting heat, including resistive heating, laser-based heating, flame, etc. It is to be understood that other technologies can be utilized other than heat to vaporize a liquid solution, including but not limited to ultrasonic technologies, ultraviolet technologies, chemical technologies, etc. Therefore, another state-changing apparatus may be substituted for the heating element **126**.

A liquid, gelatin, frozen or solid solution (solution) **128** also resides in the interior of the housing **120**, wherein the solution can be suspended in an absorbent material, capsule, or reservoir, wherein such devices may act as the holding medium for the solution **128**. The solution **128** may be a mixture that is configured to deliver a particular substance in vaporized form to the user when the solution **128** changes state to a gaseous solution (e.g., subsequent to a sufficient amount of heat being provided to the solution **128**). In an example, such substance can be nicotine. In another example, the substance may be tobacco, THC, and/or any derivative thereof. Other substances are also contemplated, such as but not limited to caffeine, vitamins, herbal substances, and any other substance deemed necessary to achieve intended goals, including those that may be desirably delivered to a user for medicinal purposes. In other examples, the substances may include various pharmaceuticals or medications. Thus, as used herein a solution can refer to an element, compound, or substance that is blended, formulated or compounded to be used in the vaporizer **100** in order to deliver the user desired effects and or taste. The solution **128** may be in liquid state, gaseous state, gelatin state, frozen state or solid state.

The first end **122** of the cartridge **104** comprises a first aperture **130** that is located at approximately the center of the first end **122** of the cartridge **104**. The second end **124** comprises a second aperture **132** that is located at approximately the center of the second end **124** of the cartridge **104**. An airflow passageway **134** extends between the first aperture **130** and the second aperture **132** axially proximate to the center of the housing **120**.

In operation, the user mechanically and electrically couples the power source **102** with the cartridge **104**. Specifically, the battery **118** is electrically coupled to the heating element **126** when the power source **102** is mechanically coupled to the cartridge **104**. The user places the second end **124** of the cartridge **104** in her mouth, and draws air through the airflow passageway **134**. The switch/sensor **112** in the power source **106** is configured to detect the drawing of air through the airflow passageway **134**, and an electric circuit is closed between the battery **118** and the heating element **126**. The process controller **114** controls an amount of voltage/current to be received by the heating element **126** from the battery **118**, such that the heating element **126** receives an appropriate amount of electrical current/voltage. The heating element **126** outputs a sufficient amount of heat to vaporize at least a portion of the solution **128**, and the user receives the vaporized solution orally. When the user ceases to draw air by way of the air passageway **134**, the sensor/switch **112** detects the lack of airflow in the air passageway **134**, and the electric circuit between the battery **118** and the heating element **126** is opened (e.g., directly by the sensor/switch **112** or responsive to receipt of instructions from the process controller **114**) with or without delay circuitry built into the control. Manual switching or activation of the power source is also an option.

With respect to the power source **102**, the battery **118** may be any suitable disposable, replaceable and/or rechargeable battery, including but not limited to a alkaline, lead acid battery, gel, a nickel cadmium battery, a nickel metal hydride battery, a lithium ion battery, a lithium ion polymer battery,

amongst others. Other power sources may also be used in place of a battery such as direct power from any DC, AC or alternative energy source including inductive, solar, chemical, perpetual motion, etc. that can be used to power a heating source. Indirect or direct flame may also be used as a power source as appropriate to trigger the state change of the solution **128** from an initial state to a gaseous aerosol state. As mentioned previously, the process controller **114** can be a microchip or microcontroller that operates as desired when used (or not used) by an individual in regards to the electronic vaporizer **100**. Thus, the process controller **114** can receive readings from the switch/sensor **112**, and can cause the voltage/current to be supplied to the heating element **126** in the cartridge **104** as a function of such readings. The switch/sensor **112** can be a switch, a sensor, or a combination of a switch and sensor. For instance, the switch/sensor **112** may comprise an electronic airflow sensor, wherein the electronic airflow sensor senses when the user is drawing on the electronic cigarette **100**. Additionally or alternatively, the switch/sensor **112** may comprise a tactile sensor that is configured to sense that the user has depressed a tactile button on the cartridge **104** and/or the power source **102**. That is, the user depresses a button to activate the heating element and draw the vaporized solution from the electronic vaporizer **100**. Still further, the switch/sensor **112** may comprise a timed switch that opens the circuit between the battery **118** and the heating element **126** after the circuit has been closed for a threshold amount of time. There are a variety of switches and sensor that can be used to detect air flow and/or pressure that can be utilized to activate the heating element.

With respect to the cartridge **104**, as mentioned previously, the main body of the housing **120** is constructed of a polymer. The first end **122** and the second end **124** may be or include end caps, wherein such end caps may be constructed of the polymer. In an exemplary embodiment, an end cap coupled to the first end **122** may at least be partially constructed of a conductive material, such as a conductive metal or a conductive polymer. Furthermore, a wood tip may be positioned upon the second end **124**, wherein the wood tip is configured to be received orally by the user. In alternative embodiments, the second end **124** may include a tip comprised of a soft, malleable and/or a flexible polymer. Also in alternative embodiments, the second end **124** may include a paper wrapping around the tip of the second end in order to more closely simulate the tip of a conventional cigarette. Such a paper wrapping may further include flavorings capable of being tasted by a user (e.g., mint, tobacco, candy, fruit, or any other types of flavorings and/or aromas).

Additionally, as described above, the solution **128** may be placed in an absorbent material, such as cotton, wool, polyester, a batting material, or some other suitable absorbent material. A wicking material may be used in order to channel the liquid or gel to the heating element. Pursuant to an example, the solution **128** may include a primary substance, such as propylene glycol, glycerin (both vegetable and manmade), glycerol and/or any combination thereof. Additionally, the solution **128** may comprise a portion of amount of a particular drug, such as nicotine, caffeine, THC, other stimulants or medicinal substance. Further, the solution **128** may comprise some amount of flavoring, such as tobacco flavoring, menthol flavoring, other suitable flavoring or any combination thereof.

Now turning to FIG. **2**, a cutaway diagram of an exemplary cartridge **200** for utilization in an electronic personal vaporizer is illustrated. The cartridge **200** comprises a housing **202**, which is constructed of a non-metallic material, such as a polymer, wood, ceramic, and/or any combination thereof. The housing **202** comprises an absorbent material **204** that has a liquid solution absorbed therein in a measured dose. The cartridge **200** includes a first end **206** and a second end **208** that is opposite the first end **206**, wherein the first and second ends **206** and **208** can be removable caps, respectively. In an example, the first end **206** is formed of a polymer, and the second end **208** is formed of a conductive material, such as a conductive polymer or a conductive metal.

The first end **206** comprises a first aperture **210**, and the second end **208** comprises a second aperture **212**. As shown, the first aperture **210** and the second aperture **212** are positioned at approximately the centers of the first and second ends **206** and **208**, respectively, such that a central axis of the cartridge **200** passes through both apertures **210** and **212**. Both or either the first end **206** or second end **208** can be integrated into a single assembly as part of the housing **202**. Additionally, the resulting assembly may or may not be able to be unassembled by the end user. An air passageway **214** begins at the first aperture **210** and extends to the second aperture **212** approximately along the central axis of the cartridge **200**. For example, the wall of the air passageway **214** may be constructed from a polymer or other suitable material.

The cartridge **200** further comprises a conductive element **216**, at least a portion of which resides in the interior of the housing **202**. For instance, the conductive element may be metallic threads that facilitate mechanically and electrically coupling the cartridge **200** with a power source (battery). The cartridge further comprises a center post **218** that extends from the second end **208** of the cartridge **202** to the airflow passageway **214**, wherein the center post **218** is hollow to allow the airflow passageway **214** to extend through the center post **218** to the second aperture **212**. In an example, the center post **218** can be formed of a conductive material, and may be constructed as being a portion of an end cap. An electrical isolator **220** is coupled to the center post **218** and extends outward from the center post **218**. For instance, the electrical isolator **220** may be an O-ring or other suitable isolator.

The cartridge **200** further comprises a heating element **222** that is coupled to the electrical isolator **220** and the conductive element **216** in the interior of the housing **202** by way of conductive lines **224** and **226**. The heating element **222** can comprise wicking material that draws the liquid solution from the absorbent material **204** towards the heating element **222**. When the cartridge **200** is coupled to a power source, the conductive element **216** is electrically coupled to a negative terminal of the power source and the center post **218** (and thus the electrical isolator **220**) is electrically coupled to a positive terminal of the power source. When a user draws a breath by way of the airflow passageway **214**, a circuit is closed, thereby providing current to the heating element **222**. The heating element **222** acts to vaporize the liquid solution in the absorbent material **204**, and the resulting vapor is received by the user. Additionally, as shown, a gap **228** may exist between the first end **206** of the cartridge **200** and the absorbent material **204**. This gap **228** can be utilized to mix air and the vaporized liquid solution to provide the user with an appropriate amount of vaporized solution.

While the heating element **222** is shown as residing solely in the airflow passageway **214**, it is to be understood that various other configurations of the heating element **222** with respect to the airflow passageway are contemplated and are

intended to fall under the scope of the hereto-appended claims. In a first example, the heating element **222** may reside on the exterior of the airflow passageway **214**, such that the heating element **222** heats the airflow passageway **214** by heating the wall of the airflow passageway **214**. In a second example, the heating element **222** may reside on the interior and the exterior of the airflow passageway **214**. In yet another example, as will be shown in greater detail below, the heating element **222** can be helical in nature and may wrap around the airflow passageway **214**, which may be constructed of a ceramic. In such a design, the wall of the airflow passageway **214** may have apertures, be permeable, or be conductive to heat such that the vaporized liquid solution may be provided to the user. Furthermore, the airflow passageway **214** itself may act as a heating element, wherein the airflow passageway **214** is constructed from an electrically conductive and a thermally conductive material, such as a conductive ceramic. Accordingly, it is readily recognized that airflow may pass directly over the heating element, through a chamber that is proximate to the heating element, or other suitable configuration.

It is to be understood that the cartridge design shown in FIG. **2** is merely but one example of a cartridge design, and numerous other designs that cause a heating element to reside in a non-metallic housing together with a liquid solution that is desirably vaporized are contemplated.

Also, an alternative embodiment of a cartridge (adapted to mount to the described power source) may be configured to receive one or more capsules or pellets. Such capsules or pellets may be comprised of one or more medicines, vitamins, a tobacco, and/or other chemical(s) that the end user may desire to taste/consume. In such an embodiment, when the cartridge with a capsules is mounted to a power source (e.g. such as the power source **104** discussed above), the mechanical connection of the cartridge and power source may cause the capsule to open and release the contents therein. The end user may then provide a suction on the tip of the cartridge with his/her mouth in order to draw the released contents of the capsule into his/her mouth. In examples of this described embodiment, the capsule may be included in the cartridge during the manufacturing of the cartridge. However, it should be appreciated that in other embodiments, the cartridge may be designed to accept one or more capsules therein via a pharmacist and/or an end user prior to mounting the cartridge to a power source. Also it should be appreciated that this described example of the cartridge may also include a heating element therein that is configured to heat a capsule (or a pellet) to cause release of the contents of the capsule/pellet when the cartridge is mounted to the power source or when other actions are detected (e.g. a button press, suction through the cartridge).

Referring now to FIG. **3**, another cutaway diagram of an exemplary cartridge **300** for utilization in an electronic personal vaporizer is illustrated. In this exemplary cartridge **300**, the center post **218** may be of a conductive material, such as a conductive ceramic or a metallic material, and may act as a heating element. Thus, walls of the airflow passageway **214** may become heated when a user draws on the cartridge, thereby altering the state of the liquid solution in the absorbent material **204** to a vapor for provision to the user. Similar to the previously described exemplary cartridge **200** (FIG. **2**), the gap **228** may exist to facilitate mixing of vaporized solution with air. This gap is optional, as other designs may call for the walls of the airflow passageway **214** to be permeable or have apertures therein, to allow for vaporized solution to mix with air in the airflow passageway **214**.

In another exemplary embodiment, a heating element **302** may be helical in nature and may wrap around the exterior of the airflow chamber **214**. The heating element in this case may also be an integrated material as part of the airflow chamber. The air flow chamber in all cases may be solid or porous in nature or have ventilation to allow for aerosol and air stream blending. The walls of the airflow chamber may be constructed of a thermally conductive material, such as a ceramic, which causes the walls of the heating element to generate a sufficient amount of heat to vaporize the liquid solution in the absorbent material **204**. In such a design, the conductive lines **224** and **226** may be coupled to the center post **218** and the conductive element **216**, respectively, thereby electrically coupling the heating element **302** to negative and positive terminals of a power source. When the user draws on the cartridge, current is provided to the heating element **302** by way of the conductive lines **224** and **226** from the power source. The heating element **302** then heats the walls of the airflow passageway **214** to a temperature that is sufficient to alter the state of the liquid solution in the absorbent material **204** when the user draws on the cartridge **300**. Again, these designs are merely exemplary in nature, and various other designs are contemplated by the inventors and are intended to fall under the scope of the hereto-appended claims.

With reference now to FIG. **4**, another exemplary electronic vaporizer **400** is illustrated. The exemplary electronic vaporizer **400** comprises three separate portions: 1) the power source **102**; 2) a first cartridge **402** that comprises the heating element **126**; and 3) a second cartridge **404** (a mouthpiece cartridge) that comprises the solution **128**. Operation of the power source **102** has been described above, and is not repeated here for sake of brevity.

The first cartridge **402** can comprise a housing **406** that is cylindrical in nature, wherein the housing **406** can be constructed from a non-metallic material such as a polymer or ceramic. The housing **406**, of course, may be manufactured to be in a shape other than a cylinder. The first cartridge **402** includes a first end **408** and a second end **410** that is opposite the first end **408**. The first end **408** of the first cartridge **402** is configured to be mechanically coupled to the second end **110** of the first cartridge **402**. Mechanical coupling of the power source **102** and the first cartridge **402** causes the battery **118** to be electrically coupled to the heating element **126** as described above. The heating element **126** can be positioned proximate to the second end **310** of the first cartridge **402**, and thus proximate to the solution **128** in the second cartridge **404**.

The second cartridge **404** comprises a housing **412**, wherein the housing **412** can be constructed of a pliable plastic material. The second cartridge **404** can comprise a first end **414** and a second end **416** that is opposite the first end **414**, wherein the first end **414** is configured to be mated with the second end **410** of the first cartridge **402**, and the second end **414** is configured to be received orally by a user. The first cartridge **402** and the second cartridge **404** may have airflow passageways (not shown) extending axially there through, such that the switch/sensor **112** can determine when the user is drawing air through the airflow passageways. The process controller **114** can cause an appropriate current/voltage to be provided to the heating element **126** by way of the battery **118**, and the heating element **126** can vaporize the solution **128** in the third cartridge **404**, thus providing the user with a vaporized substance.

While the designs of the electronic vaporizer described above include an internal direct heating element, it is to be understood that alternative designs are contemplated,

wherein the heating element is reusable or disposable and is located exterior to the housing. In such a design, the heating element transfers heat to the solution in order to vaporize the solution for oral provision to a user.

Referring now to FIG. **5**, an exemplary package **500** is illustrated, wherein the package **500** is configured for sale to consumers. The package **500** comprises a plurality of first cartridges **402** and a corresponding plurality of second cartridges **404**, which have been described in detail above with respect to FIG. **4**. The package **500** may be a tamper-proof package, with each combination of first and second cartridges sharing a compartment in the package **500**.

With reference now to FIG. **6**, an exemplary methodology is illustrated and described. While the methodology is described as being a series of acts that are performed in a sequence, it is to be understood that the methodology is not limited by the order of the sequence. For instance, some acts may occur in a different order than what is described herein. In addition, an act may occur concurrently with another act. Furthermore, in some instances, not all acts may be required to implement a methodology described herein.

With more specificity pertaining to FIG. **6**, a methodology **600** that facilitates constructing a cartridge for utilization in connection with an electronic vaporizer is illustrated. The methodology **600** begins at **602**, and at **604** a polymer-injection manufacturing technique is utilized to generate a housing for the cartridge. The polymer-injection manufacturing technique may be a multi-step polymer injection. Other manufacturing techniques are also contemplated (but not limited to), including chemical bonding, thermal molding, thermal bonding, molding through utilization of metal molds, form casting, roll forming, machining, amongst others.

At **606**, a heating element and liquid solution (e.g., placed in an absorbent material) are caused to be included in the housing. For instance, the housing can be cylindrical in nature with a size approximately the size of a filter on a cigarette. The heating element and the liquid solution reside in the interior of the housing. The methodology **600** completes at **608**.

Turning now to FIG. **7**, an exemplary personal electronic vaporizer **700** is illustrated. In a first embodiment, the electronic vaporizer **700** may be an electronic cigarette. In another embodiment, the electronic vaporizer **700** may be a drug delivery device for utilization in a medical field. The electronic vaporizer **700** comprises a power source **702** that is of a particular type. For example, the power source **702** may be manufactured by a particular manufacturer. In another example, the power source **702** may be a particular model of power source. Accordingly, the power source **702** has a connector **704** corresponding thereto that is of a first type that is associated with the particular type of the power source **702**. Pursuant to an example, the power source **702** may be a battery that is commonly utilized in electronic cigarettes. In another example, the power source **702** may be an automobile battery, a AA battery, a portable telephone, a 9 volt battery, a personal computer, an AC outlet, a generator, or some other suitable power source.

The electronic vaporizer **700** also comprises a heating element **706** that is of a type that is different than the type associated with the power source **702**. For example, the heating element **706** may be manufactured by a manufacturer that is different from the manufacturer of the power source **702**. Thus, the heating element **706** can have a connector **708** that is of a second type that is different than the type of the connector **704** on the power source **702**. Pursuant to an example, the first connector type may be a threaded connector, a magnetic connector, a push-on connector, a snap-on connector, a turn-lock connector, or other suitable connector type. The second connector type may be some connector type that is different from the first connector type.

The electronic vaporizer **700** also comprises an adapter **710** that is configured to mechanically mate the power source **702** with the heating element **706** by way of the adapter **710**. Additionally, the adapter **710** is configured to electrically couple the power source **702** with the heating element **706**. Thus, the adapter **710** comprises a first connector **712** that is of the first type (the same type as the connector **704** of the power source **702**) and a second connector **714** that is of the second type (the same type as the connector **708** of the heating element **706**). In an example, if the connector **704** is a threaded connector, the first connector **712** on the adapter **710** may be a threaded connector that is configured to receive or screw into the connector **704** of the power source **702**. Additionally, while not shown, the adapter **710** may comprise an airflow passageway that allows airflow to reach the power source **702** when a user draws on the electronic vaporizer **700**. Accordingly, the adapter **700** may be at least partially constructed of a conductive material, such as a conductive metal or a conductive polymer.

With reference now to FIG. **8**, an exemplary adapter **800** that facilitates mechanically mating and electronically coupling a power source and a heating element in an electronic vaporizer having dissimilar connection mechanisms is illustrated. The adapter **800** comprises a first connector **802** of a first type and a second connector **804** of a second type. The first connector **802** is configured to mechanically and electrically mate with a power source and the second connector **804** is configured to mechanically and electrically mate with a heating element. Accordingly, the power source is electrically and mechanically coupled to the heating element by way of the adapter **800**.

The adapter **800** also comprises circuitry **806**, which can be or include microchip, a voltage regulator, an AC/DC converter, an amplifier, circuitry that is configured to step up or step down voltage received from the power source, or some other suitable circuitry that can allow for power delivered from the power source to properly operate the heating element to cause vapor to be provided to a user as desired. Accordingly, while not shown, the adapter **800** can comprise an airflow passageway that allows air to flow between the heating element and the power source by way of the adapter.

As mentioned previously, the connectors **804** and **806** may be of dissimilar type. Therefore, for instance, the first connector **804** may be one of a threaded fastener, a magnetic connector, a twist cap connector, a push-on connector, a quick-lock connector, a t-bar connector, a half-turn lock, amongst other type of connectors, and the second connector **806** may be of a type that is dissimilar from the type of the first connector **804**.

As discussed previously with respect to FIG. **7**, an example embodiment of a personal electronic vaporizer may include a power source **702** that corresponds to a generator. Such a generator may correspond to a power harvesting device operative to generate electricity from energy in the environment associated with the personal electronic vaporizer. FIG. **9** shows an example **900** of a personal electronic vaporizer that includes a power harvesting device such as a generator **902** as the power source. In this example, the generator **902** is mounted in a housing **904** of the electronic

vaporizer. The housing **904** also includes an airflow passageway **906** that extends adjacent at least portions of the generator.

The generator may include at least one actuator device **908** such as an blade, impeller, fan, turbine, propeller, airfoil, squirrel-cage impeller, electron mass inductor, plasma accelerator and/or other type of device that is responsive to airflow through the airflow passageway **906** to urge a shaft **910** of the generator to rotate and generate an electrical current. There may also be a venturi, air duct, air ram or other channelling and/or funnelling technologies used in order to increase or decrease the speed and/or volume of the airflow. The generated electrical current may be directed via a controller **912** (e.g., a microprocessor and/or analog circuitry) included in the electronic vaporizer to power a heating element **914** sufficiently to vaporize a portion of a liquid solution **916**. As described in previous embodiments, the heating element **914** and the liquid solution **916** may be integrated into a second housing **918** that is adapted to removably connect to the first housing **904**.

As can be appreciated, the amount of electrical energy generated by the generator **902** will vary depending on the amount of air drawn through the airflow passageway **906** by a user inhaling and/or exhaling through the electronic vaporizer. In an example embodiment, the controller may be capable of regulating electricity generated from one or more inhales/exhales through the airflow passageway in order to provide the heating element with sufficient power to vaporize a portion of the liquid solution **916**. For example, the controller **912** may be in operative connection with a storage device **920** such as one or more capacitors and/or a battery. Electrical energy generated by the generator from several inhales/exhales through the airflow passageways may be stored in the storage device **920**. When a sufficient amount of energy is accumulated, the controller **912** may be operative to direct power to the heating element from the storage device in order to vaporize the liquid solution.

In order to ensure that the heating element is activated at a time desirable by a user, power to the heating element may be triggered by the controller responsive to information available to the controller (such as an air flow indication provided by a dedicated airflow sensor). However, rather than using a dedicated air flow sensor, in some embodiments, electricity generated from the generator itself may instead serve as a sensor indicating when a user is actively inhaling through the electronic vaporizer. The detection of inhaling coupled with a detection of a sufficient amount of energy in the storage device may cause the controller to power the heating element.

However, it should be appreciated that in other embodiments, additional or other information may be used to trigger the power of the heating element. For example, wind or other external air source may also be operative to urge the actuator device to turn the shaft of the generator. In order to prevent wind from activating the heating element at undesirable times, the electronic vaporizer may include at least one further sensor **922** adapted to sense that a user is holding and/or is ready for the electronic vaporizer to operate. Such a further sensor may correspond to a button or a switch, which is activated in order for the heating element to be powered.

In this described embodiment, the generator corresponds to a power harvesting device operative to acquire energy from airflows. However, it should be appreciated that in alternative embodiments of the electronic vaporizer, other types of power harvesting devices may be used. For example, an embodiment may include an induction device operative to acquire electrical power for charging a battery wirelessly via induction from an induction source near the electronic vaporizer. In another example, the power harvesting device may correspond to an inductive jet that is operative to generate electricity responsive to airflow through the inductive jet, venturi or any other mechanism that directs a air or gas flow (including air) that could or may increase or decrease the gas speed and/or volume. Furthermore this may be used as an induction system pulling gases or vapors from a secondary stream for more flow mass/speed or to use as a mixing and/or blending mechanism.

In further embodiments, the electronic vaporize may include a power harvesting device in the form of a radio frequency (RF) power receiver device that is operative to acquire electrical power from RF signals transmitted by an RF power transmitter device. In further embodiments, the power receiver may be operative to harvest power from other RF sources in the environment such as wireless network signals and/or mobile phone communication signals. Examples of RF power harvesting devices include the power harvester modules sold by Powercast Corporation in Pittsburgh, Pa.

Also, in further example embodiments, the electronic vaporizer may include a power harvesting device in the form of a vibration power receiver which is operative to convert mechanical vibrations (e.g., accelerations caused by movement of the electronic vaporizer) to electrical energy. Power harvesting devices may also include solar cells, static electricity harvesters, or any other type of device capable of harvesting power from energy sources in the vicinity of the detection device.

In these described embodiments, the power harvesting device may be operative to charge a rechargeable battery with the acquired electrical energy. The other components of the electronic vaporizer (e.g., the controller and heating element) may be powered via the battery. However, it is to be understood that example embodiments of some of the described harvesting devices may directly provide power to the controller and heating element without using a battery.

In example embodiments that include a generator, the controller may be operative to estimate an amount of airflow being drawn through the airflow passageway responsive to the electrical output from the generator. The controller may also be operative to determine when such an air flow includes a vaporized solution caused by the powering of the heating element by the controller. With such information, an example embodiment of the controller may be operative to estimate an amount of the vaporized solution that is likely being inhaled by the user. The controller may be operative to use this information to regulate and control the dosage of the vaporized solution received by the user. In this embodiment, the electronic vaporizer may correspond to a metered dosage inhaler (MDI) for nicotine, medications (e.g., for treatment of an asthma attack or other condition), and/or other chemicals.

For example, as illustrated in FIG. **9**, the controller may include a data store **924** such as a flash memory device or other non-volatile memory in which the controller is operative to store information regarding the amounts of vaporized solution that a user may have inhaled. The controller may also be operative to store time and/or date information in association with the measured amounts of inhaled vaporized solution. An example embodiment of the controller may be operative to operate the heating element responsive to the information stored in the data store. The controller may be operative to limit the amount of the vaporized solution that a user is able to inhale over a given predetermined (and/or

configurable) period of time. This may be accomplished by the controller monitoring the amount of vaporized solution that is likely inhaled via the device for a predetermined period of time. When the monitored amount reaches a predetermined threshold, the controller may be operative to prevent the heater element from vaporizing additional solution, until after a predetermined amount of time, and/or until after the controller receives a manual reset signal (via a button, or other sensor device) included in the electronic vaporizer. These described predetermined periods of time and predetermined thresholds may be stored in the data **924**.

In one or more of the previously described embodiments (e.g., embodiments with either a battery or a power harvesting device), the described controller **912** (and/or a controller **928** in the housing **918** with the solution **916**) may be operative to prevent the heater element from operating to vaporize a solution unless a specific user is detected by the electronic vaporizer. For example, in cases where the solution includes a prescription medication, a pain killer, a pharmaceutical, a narcotic, a controlled substance and/or other chemical, which is intended to be used by a specific person, the electronic vaporizer may include a sensor (e.g., such as sensor **922** in FIG. **9**) that corresponds to a fingerprint reader or other type of biometric device. Such a biometric device may acquire data from a user which is used by the controller **912** and/or **926** to verify that a predetermined user is currently holding the electronic vaporizer prior to vaporizing the solution.

In this described embodiment (with reference to FIG. **9**), a further data store **926** (e.g., a non volatile memory) may be included in the particular housing **918** that holds the solution (e.g., a prescription medication). This further data store **926** and/or data store **924** may be programmed (e.g., via a pharmacist) to include the biometric data associated with the user being treated with the prescription medication). The biometric data couples one or both of the housings **904**, **918** to a particular user. Prior to causing the heater element to vaporize the solution with the prescription medication, the controller **912** and/or **928** may require the coupled user to provide (through a sensor **922**) a biometric input that corresponds to the biometric data programmed into the data store **924** and/or **926**.

In another example, the electronic vaporizer may be capable of having a data store be programmed (with the biometric data) by the owner of the device. In this embodiment, the electronic vaporizer may include one or more input devices through which the data store **924** or **926** can be updated with biometric data usable to couple the vaporizer to a specific user. Also, in an embodiment, the electronic vaporizer may include a communication device (e.g. a USB port, Bluetooth, Wireless Ethernet) capable of connecting to an external computing device (PC, mobile phone, or other computing device) through a wired or wireless connection. The external computing device may be operative to execute software capable of updating the data store **924** or **926** in the electronic vaporizer to included biometric data that couples the device to a specific user. Coupling an electronic vaporizer to a particular user may minimize the opportunity for children or other people from using the electronic vaporizer without permission.

It should also be appreciated that further embodiments may include other features for coupling an electronic vaporizer to a particular user. For example, the sensor **922** may correspond to an RFID, Bluetooth, and/or NFC reader that is operative to wirelessly read an RFID chip or other circuit (Bluetooth, NFC) integrated into an article associated with the user. Such an RFID chip or other circuit may be integrated into an article such as a ring, bracelet, necklace, card, mobile phone, clothing, or other article worn and/or carried by the user. The RFID chip or other circuit may include a unique code that corresponds to data stored in the data store **924** and/or **926**. The controller **912** and/or, **928** may be operative to verify that the data stored in the data store **924** and/or **926** corresponds to code recently or currently being read by the RFID reader or other reader from the RFID chip or other circuit of the user's article, before causing the heater element to vaporize the solution. As described previously with respect to the embodiment with biometric data, a pharmacist and/or an end user may include computing devices capable of interfacing with one or both controllers **912**, **928** and storing data associated with the user's article in the data store **926** and/or **924**.

To enhance security and to minimize unauthorized access to the electronic vaporizer or housings included therein, read only memory may be used as a data store for storing serial numbers, public keys, or other data that is intended to remain constant. Furthermore, updateable data (e.g. biometric data, RFID/Bluetooth/NFC data) which are programmed into a data store **924** and/or **926** by a pharmacist or other authorized person (to carry out the previously described data couplings), may be digitally signed in a manner that can be authenticated by one or more of the controllers **912**, **928** in the electronic vaporizer prior to allowing the heater element to vaporize the solution.

For example, data stored in a data store **924** and/or **926** that couples the electronic vaporizer to a particular RFID chip or other circuit enabled article (e.g. a ring) may correspond to a digitally signed certificate that specifies the code that is transmitted by the article. Prior to enabling the heater element to vaporize the liquid solution, at least one of the controllers **912**, **928** may require the detection of a code from an article which matches the code stored in the certificate, as well as requiring that the signature of the certificate be cryptographically authenticated. Further, the controller **912** and/or **928** may verify that the certificate includes serial number(s) associated with one or more of the housings **904**, **918**.

Such validly signed certificates may only be generated and stored on the electronic vaporizer by a pharmacists or other person that has access to a server with the particular private key that can sign the certificate in a manner that can be authenticated using the public key securely stored in the electronic vaporizer. Thus, an unauthorized user would not be able to reprogram the electronic vaporizer (or the housing **918** that contains the solution **916**) to work with other RFID articles by installing a fake certificate in the data store **924** and/or **926**.

In addition, it should also be understood that in some embodiments a handshaking protocol may take place between controllers in different housings of the electronic vaporizer to establish encrypted communications. Such encrypted communications may minimize a man-in-the-middle attack or other hacks which may be attempted to gain unauthorized usage of the electronic vaporizer and/or associated housings/cartridges. For example, the controllers in different housings maybe able to carry out an SSL protocol to form an encrypted communication channel between the controllers through which certificates, RFID readings, biometric inputs, housing serial numbers, and/or other data may be passed therebetween. Also, it should be understood that embodiments that include an RFID/Bluetooth/NFC reader may be operative to carry out a handshaking protocol with an article. Such a handshaking protocol may establish encrypted communications with the article. The handshak-

ing protocol may also include authentication of the article using digital certificates or other cryptographic processes.

In addition, in the previously described embodiments, the data store **924** and/or **926** may be programmed when manufactured, by a pharmacist, and/or by another authorized user to include usage and dosage information that correspond to the previously described predetermined periods of time and predetermined thresholds used to limit the amount of vaporized solution inhaled by a user. For such embodiments, the controller **912** and/or **928** may include or be in operative connection with a clock that can provide time information usable to control when to enable and/or prevent usage of the electronic vaporizer between the time intervals specified by the dosage information stored in the data store **924** and/or **926**.

It should also be appreciated that one or more of the previously described embodiments of the electronic vaporizer may include a communication device for additional or other purposes besides programming the data store **926**. For example, an embodiment of the electronic vaporizer may use a communication device to communicate data stored in the data store **924** associated with monitored usage of the device to an external computing device such as a remote server. The computing device may also communicate a unique identifier (e.g., a serial number, user account number, userID) to the remote server. The remote server may compile statistics regarding use of the electronic vaporizer (associated with the unique identifier) for use by a doctor or other person to evaluate and/or monitor its use. Also, the remote server may provide usage and/or dosage data to the electronic vaporizer to activate and/or modify future limits on the operation of the electronic vaporizer. In order to connect to the remote server, the communication device (e.g. a USB port, Bluetooth, NFC, Wireless Ethernet) of the electronic vaporizer may be connected to a corresponding communication device of a mobile phone, PC, or other computing device which has access to the Internet.

In addition, it should be understood that in some embodiments, in which a generator serves as a sensor (to monitor the intake of vaporized solution), the generator may not be used to provide electrical energy to power the heater element. Rather the generator may only correspond to an air flow meter. For example, the generator may be of a size that is adapted for monitoring airflow and may not be capable of timely generating a sufficient amount of energy to power the heater element. In such cases, the electronic vaporizer may include a battery as described in previous embodiments and/or some other type of power source or power harvesting device.

Also, it should be appreciated that one or more of the embodiments described herein may be operative to carry out and/or facilitate analyzing and/or capturing information about the user of the electronic vaporizer. For example in a further embodiment, the electronic vaporizer may include one or more sensors that are operative to analyze breath, saliva, skin, sweat, tissue, and/or cells of the user using the electronic vaporizer. Such sensors may be operative to acquire data from such substances, which data is stored in one or more data stores in the electronic vaporizer. Such data may be downloadable to a remote system (via a wired or wireless connection with the electronic vaporizer) in order for medical conditions and/or other characteristics of the user to be determined and evaluated by the user themselves, caregivers, and/or medical professionals.

Also in a further embodiment, the electronic vaporizer may be operative to acquire and store substances from a user (e.g., breath, saliva, skin, sweat, tissue, and/or cells) in a storage chamber within the electronic vaporizer during use of the electronic vaporize. The electronic vaporizer and/or the storage chamber may then be connected to one or more instruments capable of extracting and analyzing the contents of the storage chamber for medical conditions or other characteristics (e.g., cancer, vitamin deficiencies, drug use).

As discussed previously the power source used in one or more embodiments described herein may correspond to a rechargeable battery. Such a rechargeable battery may be capable of being rapidly charged in a relatively fast time period (e.g., <1 hour, <30 minutes, or other time period that is less than 2 hours to charge a battery from <10% of a full charge to >90% of a full charge). In the embodiment, a rapid charger that is used to rapidly charge a battery in an electronic vaporizer in this described manner, may be capable of being plugged into any other power sources such as an AC outlet, a USB port or a DC power source.

In addition, it should be appreciated that one or more embodiments described herein may include an epinephrine auto injector or other type of auto injector that is capable of being used by a user to inject a medication capable of treating an allergic reaction, anaphylactic shock or other condition that requires an injection of a medication into the bloodstream of a user. Such an auto injector may be included in an additional housing/cartridge removably mountable to one of the other housings/cartridges described herein and/or may be integrated into one of the housings/cartridges described herein. Such an auto injector may be capable of being activated by placing an end of the housing/cartridge with the auto injector adjacent a user's body (e.g. a muscle) and pressing a button which causes a spring loaded needle in the auto injector to enter tissue of the user and inject a medication stored in the housing into the body of the person.

Further, it should be noted that any of the chemical delivery examples described herein (vaporizer, capsule, pellet, auto injector) may be operative to deliver any type of desirable substance to a user, including but not limited to: medications, antibiotics, pain killers, pharmaceuticals, narcotics, nicotine, tobacco, THC, marijuana, caffeine, vitamins, herbal substances, food, steroids, epinephrine, insulin, and/or any other substances that may be desirable by an end user of the described embodiments. Also, it should be appreciated that that one or more example embodiments may correspond to a cartridge that comprises of a housing, heating element located in the center airflow and a storage mechanism for holding the active and inert ingredients. In addition one or more embodiments may correspond to a cartridge that comprises of a housing, heating element surrounding the center of the airflow for the purpose of vaporization of ingredient or ingredients. Further one or more embodiments may correspond to a heating element that directly or indirectly contacts a solution, solid or powder to be transferred in a gaseous, liquid, powder or solid state either directly or indirectly through a carrier medium of any kind in order to be inhaled through breath or artificial breathing mechanism to be delivered either directly or indirectly to the user or subject. Also, one or more embodiments may correspond to a heating element made from metallic substance such as nichrome, nickel chromium, gaseous heating element, ceramic, ceramic composite, carbon, carbon hybrid, carbon fiber, polymer, hybrid polymer or any other material that are capable of heating a solution, solid or powder to a gaseous state for the purpose of delivering a desired substance or combination of substances in order to deliver flavors, nicotine, medicines, recreational consumables, tobacco, marijuana, vitamins or any other substance or combination of substances for consumption by

humans or animals of any kind. In addition one or more embodiments may correspond to a device or group of devices that use software and/or hardware that can also use artificial intelligence to singularly or collectively and can be linked either wirelessly or through other hard connection mechanisms to allow for the devices and user to collaborate or share collective data either knowingly or unknowingly directly or through a medium such as a server, internet or data bank locally or remotely for data collection as well as collaboration.

It is noted that several examples have been provided for purposes of explanation. These examples are not to be construed as limiting the hereto-appended claims. Additionally, it may be recognized that the examples provided herein may be permutated while still falling under the scope of the claims.

We claim:

1. A cartridge configured to couple to a power source of an electronic vaporizer, the cartridge comprising:

a housing having an interior and a solution holding medium adapted to hold a solution, the housing having a first end and a second end that is opposite the first end, the housing having a first aperture proximate the first end and a second aperture proximate the second end, the first end of the housing being adapted to electrically couple to the power source, the first aperture and the second aperture being in communication with one another to permit an airflow through the housing from the first aperture to the second aperture;

a heating element located in the interior of the housing, the heating element extending transversely to a central longitudinal axis of the housing and being at least partially exposed to the airflow, the heating element being configured to vaporize at least a portion of the solution for oral provision to an individual in the airflow, the heating element being responsive to electrical power received from the power source; and

an airflow passageway in the housing, at least a portion of the airflow passageway extending centrally and axially with respect to the housing,

wherein the airflow passageway extends centrally and axially from the first aperture to the second aperture.

2. The cartridge of claim **1**, further in combination with a power source adapted to be electrically coupled to the first end of the housing, the power source including a battery.

3. The cartridge of claim **1**, wherein the airflow passageway has a length extending intermediate of the heating element and the second aperture, the airflow passageway having an interior between the heating element and the second aperture, the interior having no cross-sectional area measured perpendicular to the central longitudinal axis of the housing smaller in cross-sectional area than a cross-sectional area of the second aperture.

4. The cartridge of claim **1**, wherein the airflow passageway has a length extending intermediate of the heating element and the second aperture, the length of the airflow passageway having a substantially uniform cross-sectional area along a continuous majority of the length, the substantially uniform cross-sectional area being measured perpendicular to the central longitudinal axis of the housing, no portion of the airflow passageway from immediately adjacent the heating element to the second aperture having a cross-sectional area smaller than a cross-sectional area of the second aperture.

5. A cartridge configured to couple to a power source of an electronic vaporizer, the cartridge comprising:

a housing having an interior and a solution holding medium adapted to hold a solution, the housing having a first end and a second end that is opposite the first end, the housing having a first aperture proximate the first end and a second aperture proximate the second end, the first end of the housing being adapted to electrically couple to the power source, the first aperture and the second aperture being in communication with one another to permit an airflow through the housing from the first aperture to the second aperture;

a heating element located in the interior of the housing, the heating element extending transversely to a central longitudinal axis of the housing and being at least partially exposed to the airflow, the heating element being configured to vaporize at least a portion of the solution for oral provision to an individual in the airflow, the heating element being responsive to electrical power received from the power source; and

an airflow passageway in the housing, at least a portion of the airflow passageway extending centrally and axially with respect to the housing,

wherein the airflow passageway extends in a straight path from the first aperture to the second aperture with only the heating element obstructing a portion of the airflow through the airflow passageway along the central longitudinal axis of the housing.

6. The cartridge of claim **5**, further in combination with a power source adapted to be electrically coupled to the first end of the housing, the power source including a battery.

7. The cartridge of claim **5**, wherein the airflow passageway having a length extending intermediate of the heating element and the second aperture, the airflow passageway having an interior between the heating element and the second aperture, the interior having no cross-sectional area measured perpendicular to the central longitudinal axis of the housing smaller in cross-sectional area than a cross-sectional area of the second aperture.

8. The cartridge of claim **5**, wherein the airflow passageway having a length extending intermediate of the heating element and the second aperture, the length of the airflow passageway having a substantially uniform cross-sectional area along a continuous majority of the length, the substantially uniform cross-sectional area being measured perpendicular to the central longitudinal axis of the housing, no portion of the airflow passageway from immediately adjacent the heating element to the second aperture having a cross-sectional area smaller than a cross-sectional area of the second aperture.

9. A cartridge configured to couple to a power source of an electronic vaporizer, the cartridge comprising:

a housing having an interior and a solution holding medium adapted to hold a solution, the housing having a first end and a second end that is opposite the first end, the housing having a first aperture proximate the first end and a second aperture proximate the second end, the first end of the housing being adapted to electrically couple to the power source, the first aperture and the second aperture being in communication with one another to permit an airflow through the housing from the first aperture to the second aperture; and

a heating element located in the interior of the housing, the heating element extending transversely to a central longitudinal axis of the housing and being at least partially exposed to the airflow, the heating element being configured to vaporize at least a portion of the solution for oral provision to an individual in the

airflow, the heating element being responsive to electrical power received from the power source,

wherein the airflow through the housing follows an airflow path, a first portion of the airflow path proximate the first aperture being defined substantially centrally and axially with respect to the central longitudinal axis of the housing, and a second portion of the airflow path proximate to the second aperture being defined substantially centrally and axially with respect to the central longitudinal axis of the housing.

10. The cartridge of claim **9**, further in combination with a power source adapted to be electrically coupled to the first end of the housing, the power source including a battery.

11. The cartridge of claim **9**, wherein the cartridge is adapted to permit the airflow to pass on both transverse sides of the heating element during use of the electronic vaporizer.

12. The cartridge of claim **9**, wherein the heating element includes a wicking material being operative to permit at least a portion of the solution to be held in the solution holding medium to be drawn toward the heating element to be vaporized.

13. The cartridge of claim **9**, wherein the first aperture proximate the first end is smaller than the second aperture proximate the second end.

14. The cartridge of claim **9**, further comprising a solution in the solution holding medium, the solution comprising one of propylene glycol and nicotine.

15. The cartridge of claim **9**, further comprising an airflow passageway in the housing, at least a portion of the airflow passageway extending centrally and axially with respect to the housing.

16. The cartridge of claim **15**, wherein a majority of the portion of the airflow passageway has a substantially uniform cross-sectional area measured perpendicular to the central longitudinal axis of the housing between the heating element and the second aperture.

17. The cartridge of claim **9**, wherein the heating element includes a coil.

18. The cartridge of claim **9**, wherein the housing further comprises an airflow chamber having a length extending intermediate of the heating element and the second aperture, the chamber having an interior between the heating element and the second aperture, the interior having no cross-sectional area measured perpendicular to the central longitudinal axis of the housing smaller in cross-sectional area than a cross-sectional area of the second aperture.

19. The cartridge of claim **9**, wherein the housing further comprises an airflow chamber having a length extending intermediate of the heating element and the second aperture, the length of the chamber having a substantially uniform cross-sectional area along a continuous majority of the length, the substantially uniform cross-sectional area being measured perpendicular to the central longitudinal axis of the housing, no portion of the chamber from immediately adjacent the heating element to the second aperture having a cross-sectional area smaller than a cross-sectional area of the second aperture.

20. The cartridge of claim **9**, wherein the heating element includes a material that when powered by the power source is adapted to vaporize the solution brought into contact with the heating element.

21. A cartridge configured to couple to a power source of an electronic vaporizer, the cartridge comprising:

a housing having an interior and a solution holding medium adapted to hold a solution, the housing having a first end and a second end that is opposite the first end and a central longitudinal axis extending from the first end to the second end, the housing having a first aperture proximate the first end and a second aperture proximate the second end, the first end of the housing being adapted to electrically couple to the power source, the first aperture and the second aperture being in communication with one another to permit an airflow through the housing; and

a heating element located in the interior of the housing, the heating element including a coil extending transversely to the central longitudinal axis of the housing and transversely to a direction of the airflow such that the airflow passes on both transverse sides of the heating element during use of the electronic vaporizer, the heating element being configured to vaporize at least the portion of the solution drawn to the heating element for oral provision to an individual in the airflow, the heating element being responsive to electrical power received from the power source; and

an airflow passageway in the housing, at least a portion of the airflow passageway extending centrally and axially with respect to the housing,

wherein the airflow passageway extends centrally and axially from the first aperture to the second aperture.

22. The cartridge of claim **21**, further in combination with a power source adapted to be electrically coupled to the first end of the housing, the power source including a battery.

23. The cartridge of claim **21**, wherein the airflow passageway has a length extending intermediate of the heating element and the second aperture, the airflow passageway having an interior between the heating element and the second aperture, the interior having no cross-sectional area measured perpendicular to the central longitudinal axis of the housing smaller in cross-sectional area than a cross-sectional area of the second aperture.

24. The cartridge of claim **21**, wherein the airflow passageway has a length extending intermediate of the heating element and the second aperture, the length of the airflow passageway having a substantially uniform cross-sectional area along a continuous majority of the length, the substantially uniform cross-sectional area being measured perpendicular to the central longitudinal axis of the housing, no portion of the airflow passageway from immediately adjacent the heating element to the second aperture having a cross-sectional area smaller than a cross-sectional area of the second aperture.

25. A cartridge configured to couple to a power source of an electronic vaporizer, the cartridge comprising:

a housing having an interior and a solution holding medium adapted to hold a solution, the housing having a first end and a second end that is opposite the first end and a central longitudinal axis extending from the first end to the second end, the housing having a first aperture proximate the first end and a second aperture proximate the second end, the first end of the housing being adapted to electrically couple to the power source, the first aperture and the second aperture being in communication with one another to permit an airflow through the housing; and

a heating element located in the interior of the housing, the heating element including a coil extending transversely to the central longitudinal axis of the housing and transversely to a direction of the airflow such that the airflow passes on both transverse sides of the heating element during use of the electronic vaporizer, the heating element being configured to vaporize at least the portion of the solution drawn to the heating element for oral provision to an individual in the

airflow, the heating element being responsive to electrical power received from the power source; and

an airflow passageway in the housing, at least a portion of the airflow passageway extending centrally and axially with respect to the housing,

wherein the airflow passageway extends in a straight path from the first aperture to the second aperture with only the heating element obstructing a portion of the airflow through the airflow passageway along the central longitudinal axis of the housing.

26. The cartridge of claim **25**, further in combination with a power source adapted to be electrically coupled to the first end of the housing, the power source including a battery.

27. The cartridge of claim **25**, wherein the airflow passageway has a length extending intermediate of the heating element and the second aperture, the airflow passageway having an interior between the heating element and the second aperture, the interior having no cross-sectional area measured perpendicular to the central longitudinal axis of the housing smaller in cross-sectional area than a cross-sectional area of the second aperture.

28. The cartridge of claim **25**, wherein the airflow passageway has a length extending intermediate of the heating element and the second aperture, the length of the airflow passageway having a substantially uniform cross-sectional area along a continuous majority of the length, the substantially uniform cross-sectional area being measured perpendicular to the central longitudinal axis of the housing, no portion of the airflow passageway from immediately adjacent the heating element to the second aperture having a cross-sectional area smaller than a cross-sectional area of the second aperture.

29. A cartridge configured to couple to a power source of an electronic vaporizer, the cartridge comprising:

a housing having an interior and a solution holding medium adapted to hold a solution, the housing having a first end and a second end that is opposite the first end and a central longitudinal axis extending from the first end to the second end, the housing having a first aperture proximate the first end and a second aperture proximate the second end, the first end of the housing being adapted to electrically couple to the power source, the first aperture and the second aperture being in communication with one another to permit an airflow through the housing; and

a heating element located in the interior of the housing, the heating element including a coil extending transversely to the central longitudinal axis of the housing and transversely to a direction of the airflow such that the airflow passes on both transverse sides of the heating element during use of the electronic vaporizer, the heating element being configured to vaporize at least the portion of the solution drawn to the heating element for oral provision to an individual in the airflow, the heating element being responsive to electrical power received from the power source,

wherein the airflow through the housing follows an airflow path, a first portion of the airflow path proximate the first aperture being defined substantially centrally and axially with respect to the central longitudinal axis of the housing, and a second portion of the airflow path proximate to the second aperture being defined substantially centrally and axially with respect to the central longitudinal axis of the housing.

30. The cartridge of claim **29**, further in combination with a power source adapted to be electrically coupled to the first end of the housing, the power source including a battery.

31. The cartridge of claim **29**, wherein the heating element includes a wicking material being operative to permit at least a portion of the solution to be held in the solution holding medium to be drawn toward the heating element to be vaporized.

32. The cartridge of claim **29**, wherein the first aperture proximate the first end is smaller than the second aperture proximate the second end.

33. The cartridge of claim **29**, further comprising a solution in the solution holding medium, the solution comprising one of propylene glycol and nicotine.

34. The cartridge of claim **29**, further comprising an airflow passageway in the housing, at least a portion of the airflow passageway extending centrally and axially with respect to the housing.

35. The cartridge of claim **34**, wherein a majority of the portion of the airflow passageway has a substantially uniform cross-sectional area measured perpendicular to the central longitudinal axis of the housing between the heating element and the second aperture.

36. The cartridge of claim **29**, wherein the housing further comprises an airflow chamber having a length extending intermediate of the heating element and the second aperture, the chamber having an interior between the heating element and the second aperture, the interior having no cross-sectional area measured perpendicular to the central longitudinal axis of the housing smaller in cross-sectional area than a cross-sectional area of the second aperture.

37. The cartridge of claim **29**, wherein the housing further comprises an airflow chamber having a length extending intermediate of the heating element and the second aperture, the length of the chamber having a substantially uniform cross-sectional area along a continuous majority of the length, the substantially uniform cross-sectional area being measured perpendicular to the central longitudinal axis of the housing, no portion of the chamber from immediately adjacent the heating element to the second aperture having a cross-sectional area smaller than a cross-sectional area of the second aperture.

38. A cartridge configured to couple to a power source of an electronic vaporizer, the cartridge comprising:

a housing having an interior and a solution holding medium adapted to hold a solution, the housing having a first end and a second end that is opposite the first end and a central longitudinal axis extending from the first end to the second end, the housing having a first aperture proximate the first end and a second aperture proximate the second end, the first end of the housing being adapted to electrically couple to the power source, the first aperture and the second aperture being in communication with one another to permit an airflow through the housing; and

a heating element located in the interior of the housing, the heating element extending transversely to the central longitudinal axis of the housing and being at least partially exposed to the airflow such that the airflow entering through the first aperture will separate and then pass on both transverse sides of the heating element and then continue along an airflow path coaxial with the central longitudinal axis of the housing toward the second aperture during use of the electronic vaporizer, the heating element being configured to vaporize at least the portion of the solution for oral provision to an individual in the airflow, the heating element being responsive to electrical power received from the power source; and

an airflow passageway in the housing, at least a portion of the airflow passageway extending centrally and axially with respect to the housing,

wherein the airflow passageway extends centrally and axially from the first aperture to the second aperture.

39. The cartridge of claim **3**, further in combination with a power source adapted to be electrically coupled to the first end of the housing, the power source including a battery.

40. The cartridge of claim **38**, wherein the heating element comprises a material that when powered by the power source is adapted to vaporize the solution brought into contact with the heating element.

41. The cartridge of claim **38**, further comprising a solution in the solution holding medium, the solution comprising one of propylene glycol and nicotine.

42. The cartridge of claim **38**, wherein a majority of the portion of the airflow passageway has a substantially uniform cross-sectional area measured perpendicular to the central longitudinal axis of the housing between the heating element and the second aperture.

43. The cartridge of claim **38**, wherein the housing further comprises an airflow chamber having a length extending intermediate of the heating element and the second aperture, the chamber having an interior between the heating element and the second aperture, the interior having no cross-sectional area measured perpendicular to the central longitudinal axis of the housing smaller in cross-sectional area than a cross-sectional area of the second aperture.

44. The cartridge of claim **38**, wherein the housing further comprises an airflow chamber having a length extending intermediate of the heating element and the second aperture, the length of the chamber having a substantially uniform cross-sectional area along a continuous majority of the length, the substantially uniform cross-sectional area being measured perpendicular to the central longitudinal axis of the housing, no portion of the chamber from immediately adjacent the heating element to the second aperture having a cross-sectional area smaller than a cross-sectional area of the second aperture.

45. A cartridge configured to couple to a power source of an electronic vaporizer, the cartridge comprising:

a housing having an interior and a solution holding medium adapted to hold a solution, the housing having a first end and a second end that is opposite the first end and a central longitudinal axis extending from the first end to the second end, the housing having a first aperture proximate the first end and a second aperture proximate the second end, the first end of the housing being adapted to electrically couple to the power source, the first aperture and the second aperture being in communication with one another to permit an airflow through the housing; and

a heating element located in the interior of the housing, the heating element extending transversely to the central longitudinal axis of the housing and being at least partially exposed to the airflow such that the airflow entering through the first aperture will separate and then pass on both transverse sides of the heating element and then continue along an airflow path coaxial with the central longitudinal axis of the housing toward the second aperture during use of the electronic vaporizer, the heating element being configured to vaporize at least the portion of the solution for oral provision to an individual in the airflow, the heating element being responsive to electrical power received from the power source; and

an airflow passageway in the housing, at least a portion of the airflow passageway extending centrally and axially with respect to the housing,

wherein the airflow passageway extends in a straight path from the first aperture to the second aperture with only the heating element obstructing a portion of the airflow through the airflow passageway along the central longitudinal axis of the housing.

46. The cartridge of claim **45**, further in combination with a power source adapted to be electrically coupled to the first end of the housing, the power source including a battery.

47. The cartridge of claim **45**, wherein the airflow passageway has a length extending intermediate of the heating element and the second aperture, the airflow passageway having an interior between the heating element and the second aperture, the interior having no cross-sectional area measured perpendicular to the central longitudinal axis of the housing smaller in cross-sectional area than a cross-sectional area of the second aperture.

48. The cartridge of claim **45**, wherein the airflow passageway has a length extending intermediate of the heating element and the second aperture, the length of the airflow passageway having a substantially uniform cross-sectional area along a continuous majority of the length, the substantially uniform cross-sectional area being measured perpendicular to the central longitudinal axis of the housing, no portion of the airflow passageway from immediately adjacent the heating element to the second aperture having a cross-sectional area smaller than a cross-sectional area of the second aperture.

* * * * *