[19] China National Intellectual Property Administration

[51] Int. Cl.
A24F 47/00 (2006.01)

[12] Specification of Invention Patent Application Publication

[21] Application No.: 200710054948.5

[43] Publication Date February 18, 2009

[11] Publication No. CN 101366554A

[22] Application Date August 13, 2007
[21] Application No. 200710054948.5
[71] Applicant WANG Shanhong
Address Jinchao Bookstore, No. 39, Zhengzhou Book Market North District, No. 99 Longhai West Road, Zhengzhou City, Henan Province 450006
[72] Inventor WANG Shanhong
[74] Patent Agency Zhengzhou Zhongyuan Patent Office Co., Ltd.
Agent ZHANG Junyan

1 page of Claims 6 pages of Specifications 3 pages of Attached Drawings

[54] Title of the Invention

Electronic Pure Cigarette

[57] Abstract

The invention discloses an electronic pure cigarette, which comprises a cigarette holder part and a cigarette rod part. The cigarette rod part consists of a cigarette rod shell, a battery, a sensor, an indicating lamp, a circuit control board, an indicating lamp cover, an air inlet, an air outlet, an output end, and the like. The cigarette holder part consists of a cigarette holder shell, an electric heater, a tobacco extract, an organic fiber, an air inlet, an air outlet, an input end, and the like. The use effect and the taste of the electronic pure cigarette are very similar to that of the common cigarette, and thus a substitute which is extremely similar to the common cigarette in the use effect and the taste is provided. Meanwhile, the automatic control function of the electronic products is performed. The occurrence and the

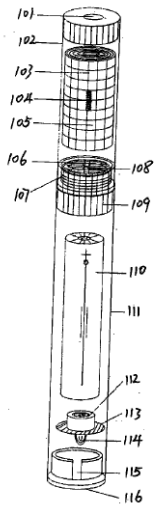

pause of the smoke are controlled along with the smoking motions, and a disposable cigarette holder which has the same shape as the filter tip part of the common cigarette and is clean and sanitary is provided. A novel electronic pure cigarette is created, thereby improving the physical and mental health of wide smokers and meeting the requirements of modern civilization.

1. An electronic pure cigarette, comprising a cigarette holder part and a cigarette rod part, characterized in that the cigarette rod part consists of a cigarette rod shell, a battery, a sensor, an indicating lamp, a circuit control board, an indicating lamp cover, an air inlet, an air outlet, an output end, and the like, and the cigarette holder part consists of a cigarette holder shell, an electric heater, a tobacco extract, an organic fiber, an air inlet, an air outlet, an input end, and the like.

2. The electronic pure cigarette according to Claim 1, characterized in that a cigarette holder is a disposable product, and is used after being connected to a cigarette rod through the input end.

3. The electronic pure cigarette according to Claim 1, characterized in that in a cigarette holder structure, an adsorption material of the tobacco extract is the organic fiber, especially a fiber made of a natural tobacco material.

4. The electronic pure cigarette according to Claim 1, characterized in that an appropriate amount of nicotine is mixed in after the tobacco extract is diluted with alcohols, and a mixture is quantitatively soaked into the organic fiber.

5. The electronic pure cigarette according to Claim 1, wherein the output end of the cigarette rod is also able to be used as an input end, which is connected with a charger with a matching output end for repeated charging and use.

6. The electronic pure cigarette according to Claim 1, characterized in that the cigarette rod adopts a longer cylindrical shape of a cigarette body part of a common cigarette; the cigarette holder adopts a shorter cylindrical shape of a filter tip part of the common cigarette; and the two are connected together to form a shape consistent with that of the common cigarette.

Electronic Pure Cigarette

Technical Field

The present invention relates to an electronic pure cigarette, that is, a device that controls a battery to discharge through smoking motions, thereby driving an electric heater to generate heat, and further atomizing a tobacco extract. The electronic pure cigarette is a tobacco substitute that conforms to smoking habits.

Background Art

Common cigarettes have been flourishing in the world for a hundred years without substantial changes. Their basic feature is that tobacco is directly ignited by an open flame, smoke and soot are produced at the same time, the tobacco burning process cannot be freely controlled, and smokers affect others and endanger themselves. Especially in public places, smoking is uncivilized and has potential fire hazards, and the global call for smoking bans is getting stronger and stronger. On the other hand, due to long-term physical and mental habits, it is difficult for the smokers to endure the pain of compulsory smoking cessation. Although various tobacco substitutes have appeared, they cannot be truly accepted by the majority of smokers because they are far away from the common cigarettes in their use effects and tastes.

Summary of the Invention

The objectives of the present invention are to overcome the shortcomings of the prior art above, and to provide a smoking device that is extremely similar to a common cigarette in use effect and taste, occurrence and pause of smoke can be controlled along with smoking motions, and a disposable cigarette holder which has the same shape as a filter tip part of the common cigarette and is clean and sanitary is provided, thereby improving the physical and mental health of wide smokers and meeting the requirements of modern civilization.

The objectives of the present invention are implemented through the following technical solution:

An electronic pure cigarette comprises a cigarette holder part and a cigarette rod part, the cigarette rod part consists of a cigarette rod shell, a battery, a sensor, an indicating lamp, a circuit control board, an indicating lamp cover, an air inlet, an air outlet, an output end, and the like, and the cigarette holder part consists of a cigarette holder shell, an electric heater, a tobacco extract, an organic fiber, an air inlet, an air outlet, an input end, and the like.

A cigarette holder is a disposable product, and is used after being connected to a cigarette rod through the input end.

In a cigarette holder structure, an adsorption material of the tobacco extract is the organic fiber, especially a fiber made of a natural tobacco material.

An appropriate amount of nicotine is mixed in after the tobacco extract is diluted with alcohols,

and a mixture is quantitatively soaked into the organic fiber.

The output end of the cigarette rod is also able to be used as an input end, which is connected with a charger with a matching output end for repeated charging and use.

The cigarette rod adopts a longer cylindrical shape of a cigarette body part of a common cigarette; and the cigarette holder adopts a shorter cylindrical shape of a filter tip part of the common cigarette. the two are connected together to form a shape consistent with that of the common cigarette.

The present invention has the advantages:

The use effect and the taste of the electronic pure cigarette are very similar to that of the common cigarette, and thus a tobacco substitute which is extremely similar to the common cigarette in the use effect and the taste is provided. Meanwhile, the automatic control function of the electronic products is performed. The occurrence and the pause of the smoke are controlled along with the smoking motions, and a disposable cigarette holder which has the same shape as the filter tip part of the common cigarette and is clean and sanitary is provided. A novel electronic pure cigarette is created, thereby improving the physical and mental health of wide smokers and meeting the requirements of modern civilization.

Brief Description of the Drawings

Fig. 1 is a schematic structural diagram of Embodiment 1;

Fig. 2 is an amplified schematic structural diagram of a cigarette rod part in Fig. 1;

Fig. 3 is an amplified schematic structural diagram of a cigarette holder part in Fig. 1;

Fig. 4 is a schematic structural diagram of a connecting part of a cigarette holder and a cigarette rod in Fig. 1;

Fig. 5 is a schematic structural diagram of an organic fiber in Fig. 1;

Fig. 6 is a schematic structural diagram of a cigarette holder part in Embodiment 2; and

Fig. 7 is a schematic structural diagram of Embodiment 3.

Detailed Description of Embodiments

Embodiment: as shown in Figs. 1, 2, 3, an electronic pure cigarette comprises a cigarette rod consisting of a cigarette rod shell 111, a battery 110, a sensor 112, an indicating lamp 114, a circuit control board 113, an indicating lamp cover 116, an air inlet 115, an air outlet 108, an output end 109, and the like; and a cigarette holder consisting of a cigarette holder shell 102, an electric heater 104, a tobacco extract 103, an organic fiber 105, an air inlet 106, an air outlet 101, an input end 107, and the like.

The cigarette rod shell 111 adopts a longer cylindrical shape of a cigarette body part of a common cigarette, and an appearance effect consistent with that of the cigarette body part of the common cigarette is manufactured through methods such as spraying, printing or external pasting. The cigarette rod shell is a hollow cylinder, providing a space for the battery 110, the sensor 112, the

indicating lamp 114, the circuit control board 113 and wires to solder them. One end of the shell is one end of the air outlet 108, and is connected to the input end of the cigarette holder along with the output end 109. The other end of the shell is one end of the air inlet 115 on the indicating lamp cover 116, and forms an uninterrupted airflow channel together with a gap inside the shell 111.

The battery 110 of the cigarette rod is a lithium-ion battery, a polymer battery or other high-energy batteries that can be repeatedly charged, and may also be specially made into a hollow battery with a vent hole in the middle, thereby omitting the shell 111 of the cigarette rod.

The sensor 112 of the cigarette rod is a switch device that drives the circuit control board 113 and then drives the discharge output of the battery 110. The sensor is used to collect airflow and pressure changes generated by smoking motions in real time, a method of judging resistance value changes may be adopted, and a specially-made diaphragm device may also be used to sense on-off signals.

The indicating lamp 114 of the cigarette rod is a light-emitting diode with low power consumption, when in use, it is provided with an appropriate number of resistors, red or yellow light shines through the indicating lamp cover 116, which is very similar to the effect of burning a cigarette butt in the common cigarette, then proper delay processing is performed, and a faint smoking effect is created along with the smoking motions. The indicating lamp 114 and the matched resistors may be integrated with the circuit control board 113, or may be made into a lamp board separately.

A core of the circuit control board 113 of the cigarette rod is an embedded chip or a burnable chip, and may also be simplified as an ordinary comparator, which forms a working state control system and a battery management system together with corresponding peripheral circuits. The circuit control board judges a switching signal through the sensor 112, so as to supply power to the output end 109 and the indicating lamp 114, manage a voltage and current of the battery 110, and give corresponding prompts through the indicating lamp 114, and specially designed sound or display output may also be loaded.

The indicating lamp cover 116 of the cigarette rod is embedded at one end of the air inlet 115 of the shell 111 to play roles in protecting an internal structure of the shell 111, shining the light-emitting diode 114, providing an airflow channel and the like.

The air inlet 115 of the cigarette rod may be placed in the middle or on a side of the indicating lamp cover 116, and may also be opened in the side of the shell 111 for driving the sensor 112 and providing the airflow channel.

The air outlet 108 of the cigarette rod is placed in the middle or on a side of the output end 109 of the cigarette rod, and under the state that the output end 109 of the cigarette rod and the input end 107 of the cigarette holder are connected together, the air outlet 108 of the cigarette rod and the air inlet 106 of the cigarette holder are also naturally in butt joint together.

The output end 109 of the cigarette rod matches the input end 106 of the cigarette holder, and

two poles are isolated by an insulating material, and are connected with the input end 107 of the cigarette holder, respectively, thereby connecting to the electric heater 104 of the cigarette holder. At the same time, it plays a role in being fixed with the cigarette holder as a whole.

The output end 109 of the cigarette rod may also be used as an input end to be connected with a household AC charger with a matching output end, or with a vehicle-mounted DC charger with a matching output end, or with a storage charger with a matching output end for repeated charging and use.

The cigarette holder shell 102 adopts a shorter cylindrical shape of a filter tip part of a common cigarette, and an appearance effect consistent with that of the filter tip part of the common cigarette is produced through methods such as spraying, printing or external pasting. The cigarette holder shell 102 is a hollow cylinder with one end being one end of the air inlet 106, and is connected to the output end 109 of the cigarette rod together with the input end 107. The other end is one end of the air outlet 101, and is used for being held by a smoker together with an outer side of the shell 102, just like holding a filter tip of the common cigarette. The interior of the shell 102 provides a space for the electric heater 104 and the tobacco extract 103 and organic fiber 105 wound around it, and also provides a space for smoke produced when the tobacco extract 103 in the organic fiber 105 is heated by the electric heater 104.

A resistance value and power of the electric heater 104 of the cigarette holder match with those of the battery 110 of the cigarette rod, which may be realized by a heating wire, a metal coated film, a carbon film and other ways. Two poles of the electric heater 104 are connected with two poles of the input end 106, respectively. Since the motions of the smoker may control the sensor 112, the working time and pause time of the electric heater 104 also change intermittently with the motions of the smoker, thereby atomizing the tobacco extract 103 around it intermittently.

The tobacco extract 103 of the cigarette holder is natural tobacco absolute oil, a certain proportion of nicotine is mixed in after the tobacco extract is diluted with alcohols in a certain proportion, and then a mixture quantitatively soaked in the organic fiber 105. Since the tobacco extract 103 is in a liquid or paste state, when heated, the tobacco extract 103 is first vaporized into smoke.

The organic fiber 105 of the cigarette holder is a natural wood fiber or natural absorbent paper, especially a fiber made of natural tobacco, which may not only meet the needs of absorbing the tobacco extract 103, but also provide natural smoke aroma, reaching a very similar taste as a common cigarette.

The air inlet 106 of the cigarette holder is placed in the middle or on a side of the input end 107 of the cigarette holder, and under the state that the input end 107 of the cigarette holder and the output end 109 of the cigarette rod are connected together, the air inlet 106 of the cigarette holder and the air

outlet 108 of the cigarette rod are also naturally in butt joint together.

The air outlet 101 of the cigarette holder is placed at the other end of the air inlet 106 of the cigarette holder, and is a channel for finally sucking out smoke. The air outlet 101 of the cigarette holder may be integrated with the cigarette holder shell 102 or may be separated.

The air inlet 115 of the cigarette rod, an internal gap of the cigarette rod, the air outlet 108 of the cigarette rod, the air inlet 106 of the cigarette holder, an internal gap of the cigarette holder and the air outlet 101 of the cigarette holder form the complete airflow channel. Its working sequence is as follows: a smoking motion causes airflow to enter the interior of the cigarette rod through the air inlet 115 of the cigarette rod, the sensor 112 is driven to transmit a switching signal to the control circuit board 113, the control circuit board 113 drives the heater 104 connected together through terminals to work, at the same time, the airflow reaches the internal gap of the cigarette holder through the air outlet 108 of the cigarette rod and the air inlet 106 of the cigarette holder, and the smoke generated by the tobacco extract 103 instantly heated by the heater 104 is partially sucked out from the air outlet 101 of the cigarette holder. Smoke is generated anytime you suck, and power is cut off anytime you stop.

As shown in Fig. 5, the input end of the cigarette holder matches the output end of the cigarette rod, the two poles are isolated by an insulating material, and are connected with the output end of the cigarette rod, that is, the two poles are connected to the output end, respectively, an electrode 117 is in butt joint with an electrode 107, the electrode 107 is in butt joint with an electrode 119, and the air inlet 106 and the air outlet 108 are also in butt joint, thereby playing the role of fixing the cigarette holder and the cigarette rod as a whole. The input end of the cigarette holder and the output end of the cigarette rod may be of screw-fit structures, may also be of plug-fit structures.

Embodiment 2: as shown in Fig. 6, the structure of this embodiment is basically the same as that of the embodiment, the difference being that the cigarette holder part is composed of a capsule jacket and a capsule evaporator, and the capsule jacket is a jacket of a disposable capsule cigarette holder, consisting of a shell 201, a filter rod 202, a soft capsule 204 and a tobacco extract 203 quantitatively filling therein. Because the filter rod 202 has a breathable effect, an effect of the air outlet 101 is replaced, the soft capsule 204 and the tobacco extract 203 quantitatively filling therein are partially embedded into the filter rod 202 and partially exposed in the shell 201, and due to the fixing effect of the shell 201, a relatively independent application unit is formed. The capsule evaporator is an evaporator of the disposable capsule cigarette holder, consisting of a shell 205, an organic fiber 208, an ejector pin 206, an electric heater 207, an air inlet 209 and an input end 210, two poles of the electric heater 207 are connected with two poles of the input end 210, respectively, and due to the effect of the shell 205, a relatively independent application unit is also formed.

A diameter of the jacket of the disposable capsule cigarette holder is larger than a diameter of the

evaporator of the capsule cigarette holder, and the jacket and the evaporator are mounted together in a sleeving mode to form a functionally complete capsule cigarette holder. Due to a puncture effect of the ejector pin 206, the soft capsule 204 may be pierced, so that the tobacco extract 203 in the soft capsule 204 flows into an adsorption fiber 208, and with the starting of the electric heater 207, the tobacco extract 206 is atomized and is sucked into the mouth through tiny gaps of the filter rod 202.

The evaporator may be a disposable product or may be used repeatedly, and the capsule jacket is a disposable product, which may play a role in supplementing the tobacco extract 203 for the evaporator of the disposable capsule cigarette holder. Since the jacket of the disposable capsule cigarette holder is replaced at any time in use, an effect of maintaining hygiene is realized.

Since the evaporator of the disposable capsule cigarette holder may be used repeatedly, it may also be made as a whole with the cigarette rod in embodiment 1. Since they are not detachable, a charging interface is provided at the bottom of the indicating lamp cover 116, and the charging interface may also be provided on a side surface of the cigarette rod shell 111.

Embodiment 3: as shown in Fig. 7, in practical applications, in order to use a battery with greater energy, an external battery 303 in a shape of a cigarette case may be configured for the electronic pure cigarette 301, the external battery 303 may charge the electronic pure cigarette 301 and may also be used directly, and due to its large size, it may be equipped with an electric quantity display screen 302 and a solar panel 304.

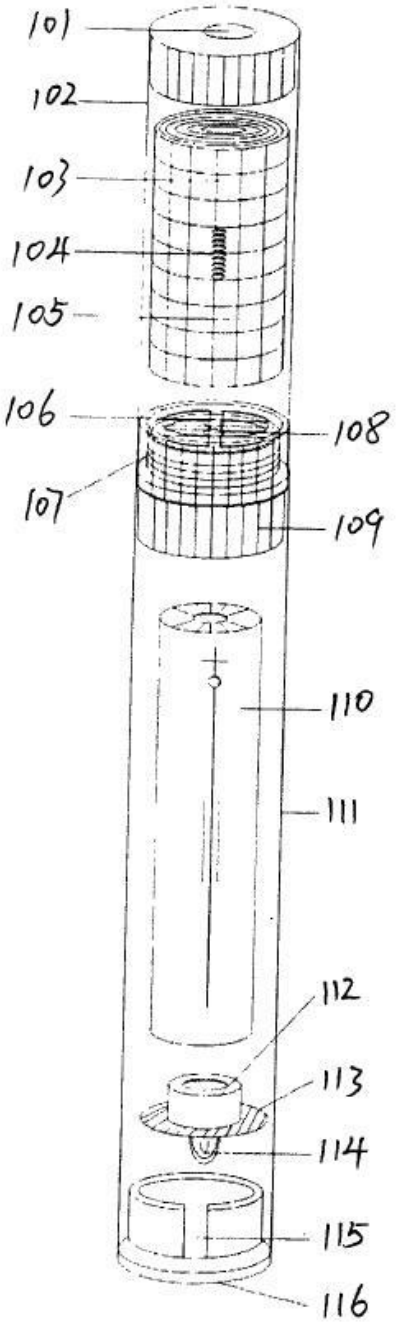

Fig. 1

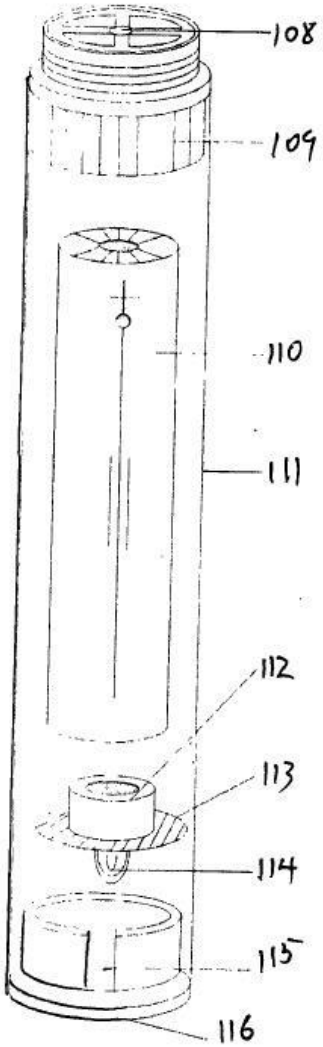

Fig. 2

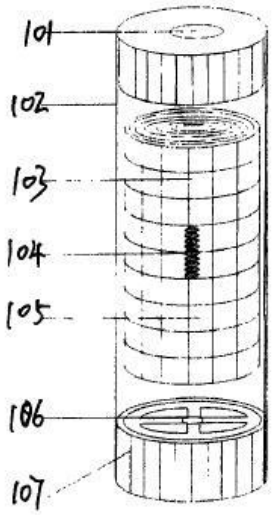

Fig. 3

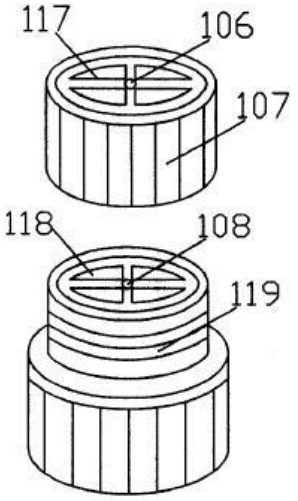

Fig. 4

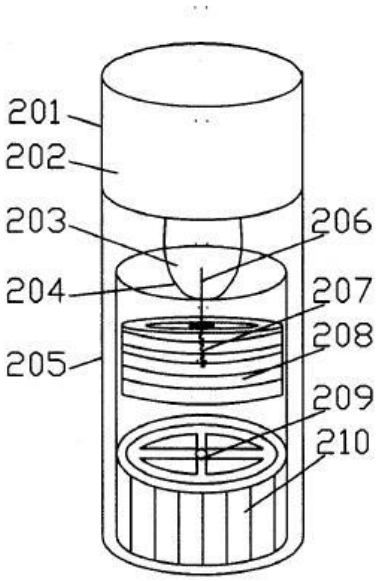

Fig. 6

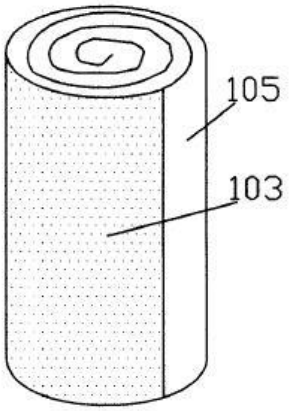

Fig. 5

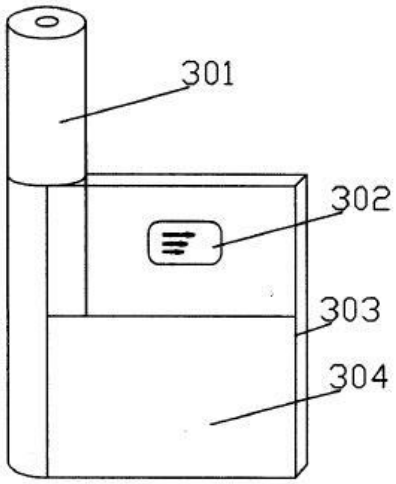

Fig. 7