EXHIBIT 4

EXHIBIT 4

D.I. Technical Prong Claim Chart (VUSE Ciro) for U.S. Patent No. 10,334,881[1] [2]

The following exemplary claim charts show how a representative VUSE Ciro product practice certain claims of U.S. Patent No. 10,334,881. These claim charts are based on the information currently available to NJOY, and the evidence presented in these claim charts is exemplary and representative in nature. To the extent Respondent contends that any limitation is not literally present, NJOY alleges that the limitation is present under the doctrine of equivalents. NJOY reserves all rights to update and elaborate on its domestic industry positions and to proffer additional and alternative theories on how the domestic industry products practice the claims of the asserted patents, including as NJOY obtains additional information during the course of discovery.

On information and belief, all VUSE Ciro products practice this patent for the same or substantially similar reasons.

Claim 1

Claim 1	
[1.1] An apparatus comprising:	The VUSE Ciro is an apparatus.

[1] This chart is based on information currently available to NJOY. NJOY reserves all rights to update, modify, and/or clarify its infringement positions as it obtains additional information through discovery.

[2] Complainant additionally refers to the evidence of the Ciro practicing the ’881 patent in Dkt. Nos. 120-10 and 120-11 from *Fuma International LLC v. R.J. Reynolds Vapor Company*, Case No. 1:19-cv-260 (M.D.N.C.).

[1.2] a power source, wherein the power source includes a battery, wherein the power source includes an electrically conductive portion; and	The VUSE Ciro comprises a power source [A] including a battery [B] and an electrically conductive portion [C]. 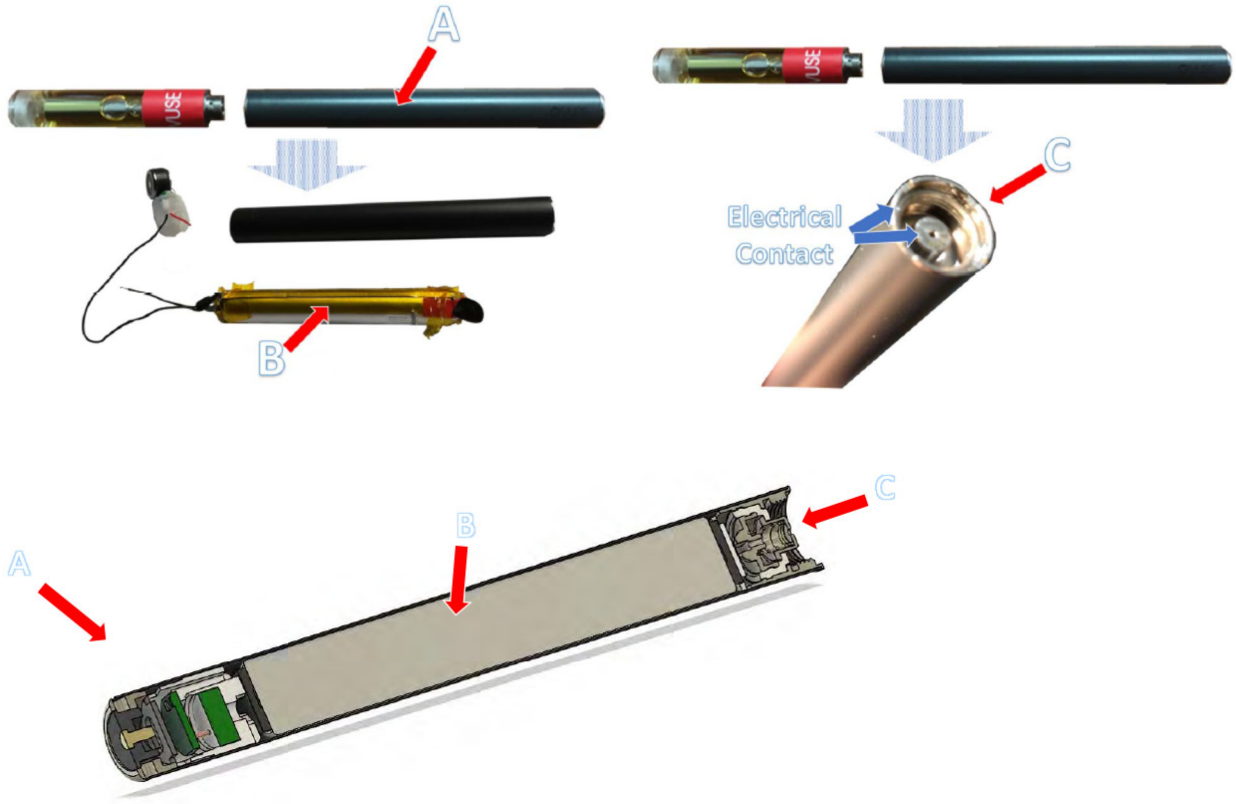

Claim 1	
	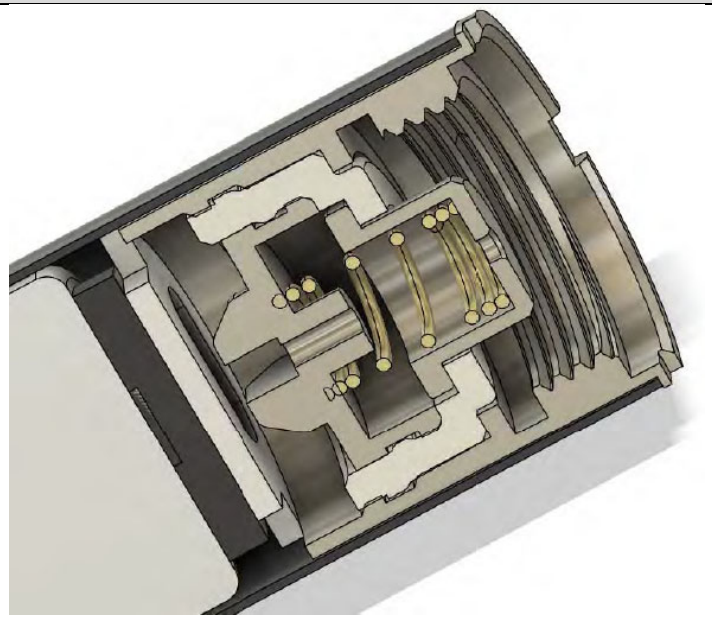

[1.3] a cartridge having a housing that comprises an interior, wherein the housing includes a first end and a second end that is opposite the first end, wherein the housing includes a first aperture on the first end and a second aperture on the second end,	The VUSE Ciro comprises a cartridge [D] having a housing [E] with an interior, the housing has a first end [F] and an opposite second end [G], and the housing has first and second apertures [H, I] on the first and second end, respectively. 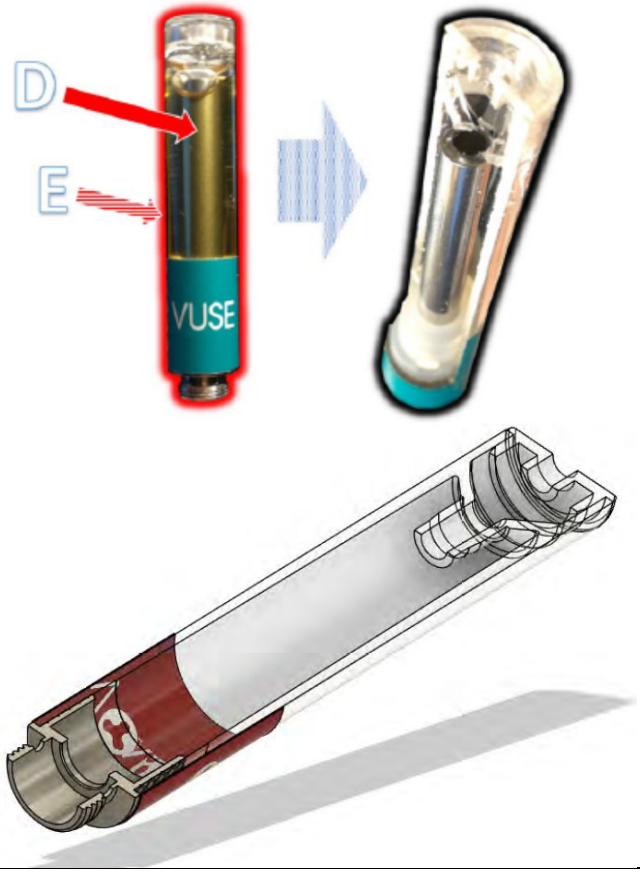

Claim 1	
	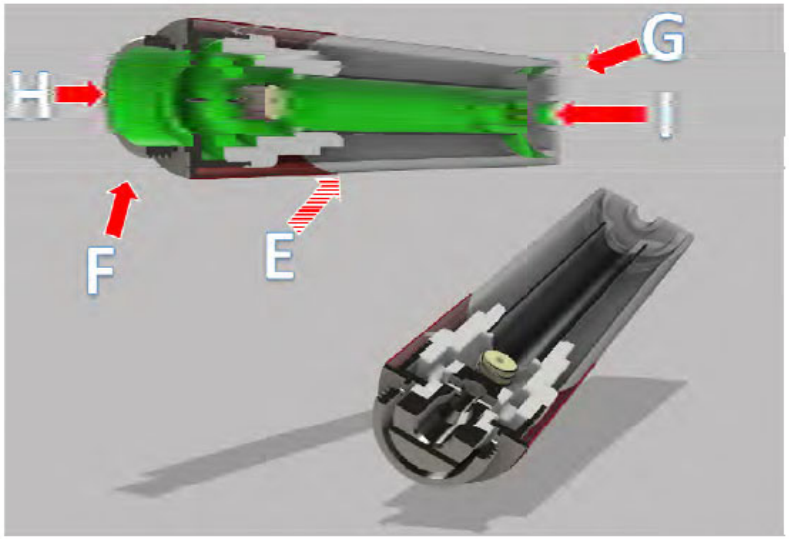

[1.4] wherein the housing includes an airflow passageway that extends centrally and axially with respect to the housing intermediate of the first aperture on the first end of the housing and the second aperture on the second end of the housing, wherein the airflow passageway is configured to allow an airflow through the cartridge from the first aperture to the second aperture of the housing,	The VUSE Ciro comprises a cartridge where the housing [E] includes an airflow passageway [J] that extends centrally and axially with respect to the housing intermediate of the first and second aperture [H, I], and is configured to allow airflow from the first to the second aperture. 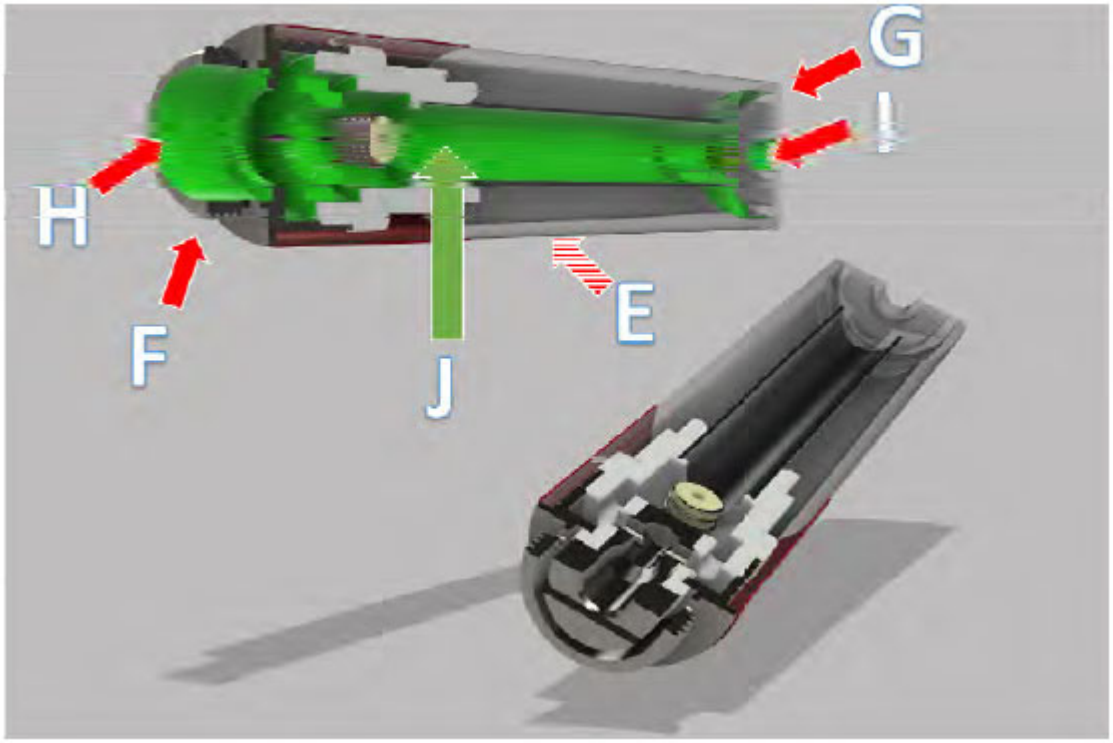 The presence of the Positive Pin in the airflow passageway does not mitigate the presence of the airflow passageway shown in green in the above figure.

	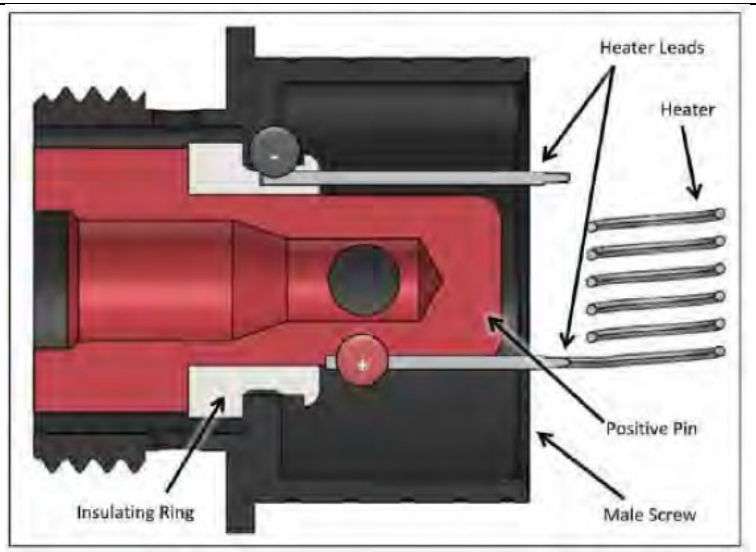 For example, Figure 2 of the asserted patents depicts a transverse heating element (element 222) that causes the air to pass to its transverse sides:

	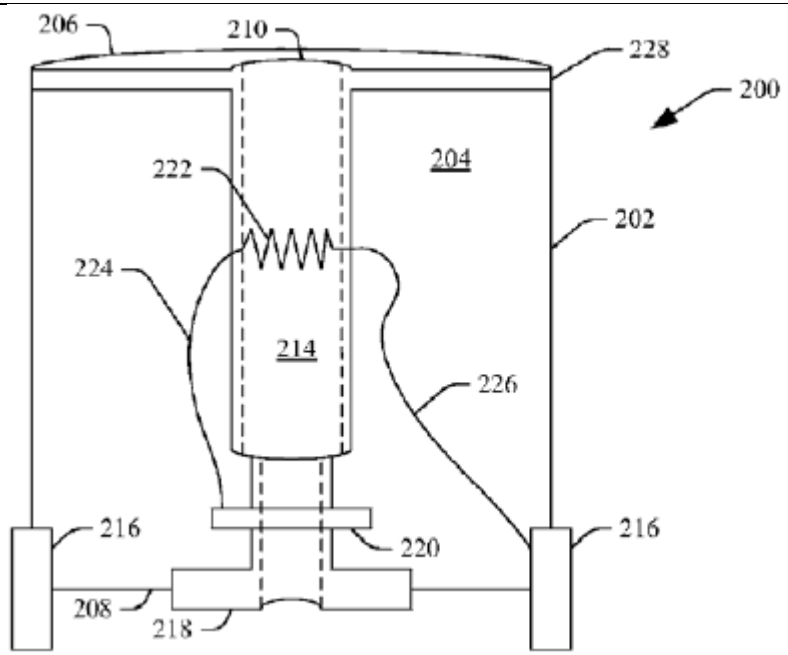 FIG. 2 ’881 patent: “Claim 1: . . . wherein the heating element extends transversely across the airflow passageway, wherein the airflow through the passageway passes on both transverse sides of the element.”

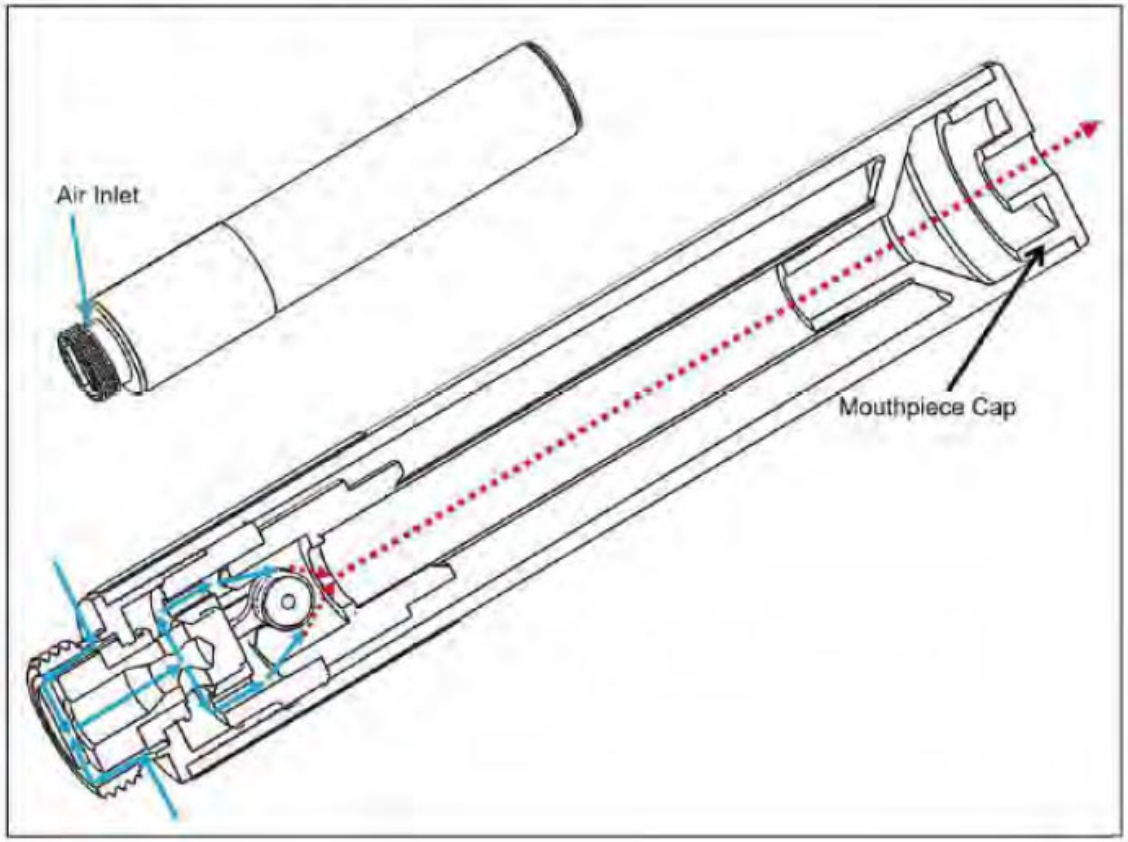

The following cross-section, with the airflow passageway illustrated in green, shows the insertion of the Positive Pin into the Ciro. The heating element is highlighted in blue to show the circular cross-sectional obstruction to the airflow, around which the air in the airflow passageway must pass. Likewise, the inserting the Positive Pin to power the heating element forms a semi-rectangular cross-sectional obstruction—also highlighted in blue—around which the air in the airflow passageway passes:

	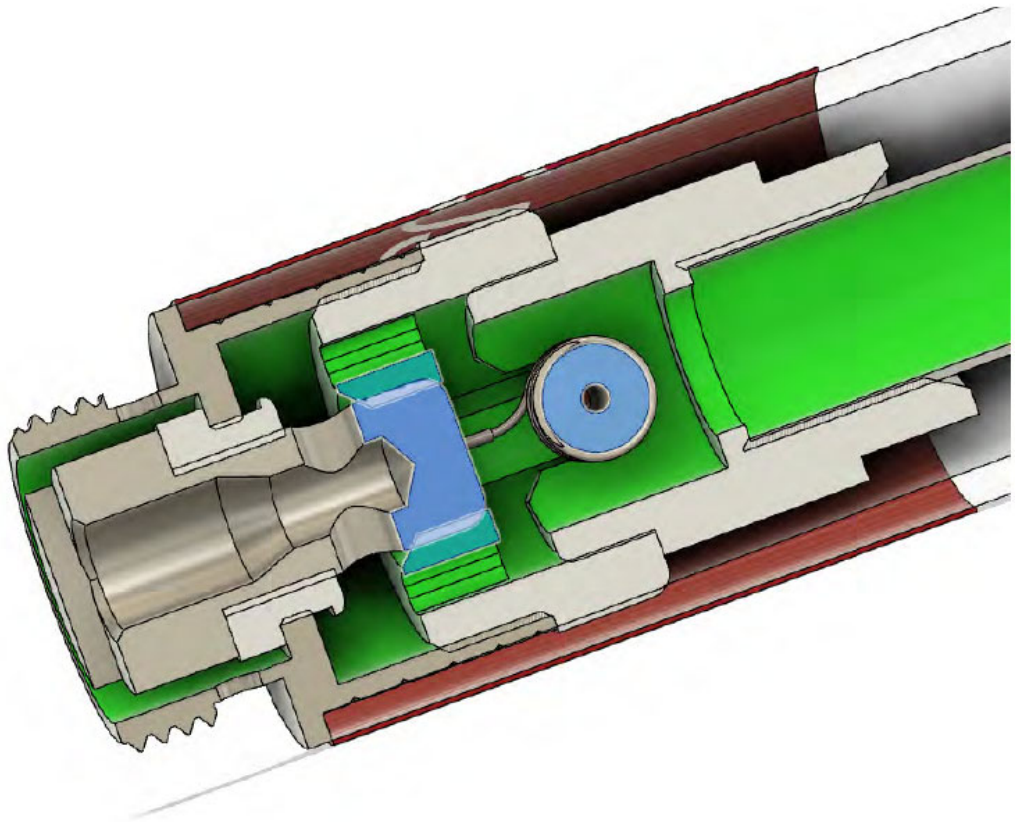 The Ciro also meets limitation 1.4 under the doctrine of equivalents. The illustrated airflow passageway extends in a straight path through the center of the cartridge from a first opening on the first end to a second opening on the opposite end of the cartridge, and inserting a "Positive Pin" in the airflow passageway does not alter or diminish the existence and purpose of the central airflow passageway. The function of the airflow passageway in the claimed invention is to enable air to flow from the first end (or opening) to the second end (or opening) of the cartridge. See, for example, Claim 1 "the airflow passageway is configured to allow an airflow through the cartridge from the first aperture to the second aperture of the housing" The way in which that function is achieved is by providing a path for air to flow from the first end (or opening) to the second end (or opening). As described and depicted above, the airflow still has a path from the

	first to second ends of the cartridge. The result achieved is to deliver vaporized solution and air for oral provision to an individual. In the Ciro, the airflow passageway [J] achieves the same function, in the same way, with the same result. Additionally, to insert a "Positive Pin" in the airflow passageway is an insubstantial change that does not detract from the purpose of the airflow passageway, which is to enable airflow from the first end (or opening) to the second end (or opening). Furthermore, for the purposes of providing airflow, there is no difference in having a Positive Pin with side holes rather than a Positive Pin with a single through hole that would allow airflow through the middle. A Positive Pin used to provide electrical connectivity to the heater as in the Ciro is already described in the asserted patents when they reference the "center post" 218: The cartridge further comprises a center post **218** that extends from the second end **208** of the cartridge **202** to the airflow passageway **214**, wherein the center post **218** is hollow to allow the airflow passageway **214** to extend through the center post **218** to the second aperture **212**. In an example, the center post **218** can be formed of a conductive material, and may be constructed as being a portion of an end cap. An electrical isolator **220** is coupled to the center post **218** and extends outward from the center post **218**. For instance, the electrical isolator **220** may be an O-ring or other suitable isolator. '604 patent Column 6, line 29-39; '881 patent Column 6, lines 30-40.

Claim 1	
	element **222**. When the cartridge **200** is coupled to a power source, the conductive element **216** is electrically coupled to a negative terminal of the power source and the center post **218** (and thus the electrical isolator **220**) is electrically coupled to a positive terminal of the power source. When a '604 patent Column 6, line 46-50; '881 patent Column 6, lines 47-51. 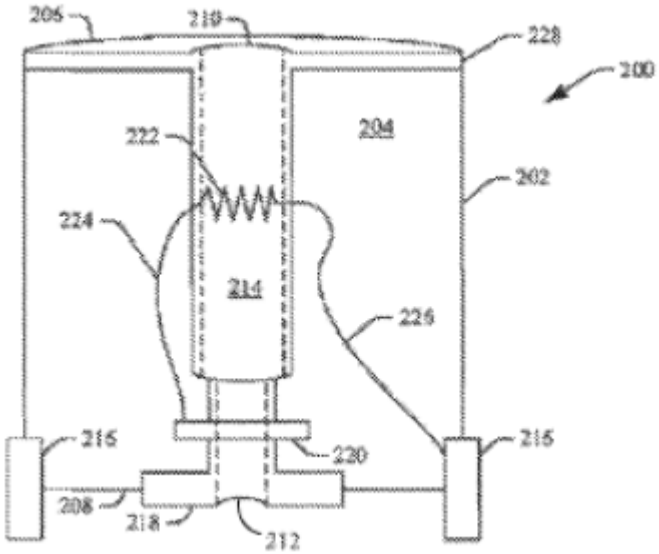 '881 Figure 2

[1.5] wherein the first end of the housing includes an electrically conductive portion that is adapted to mechanically and electrically couple to the electrically conductive portion of the power source,	The VUSE Ciro comprises a cartridge where the first end [F] of the housing [E] includes an electrically conductive portion [K] that is adapted to mechanically and electrically couple to the electrically conductive portion of the power source [C]. 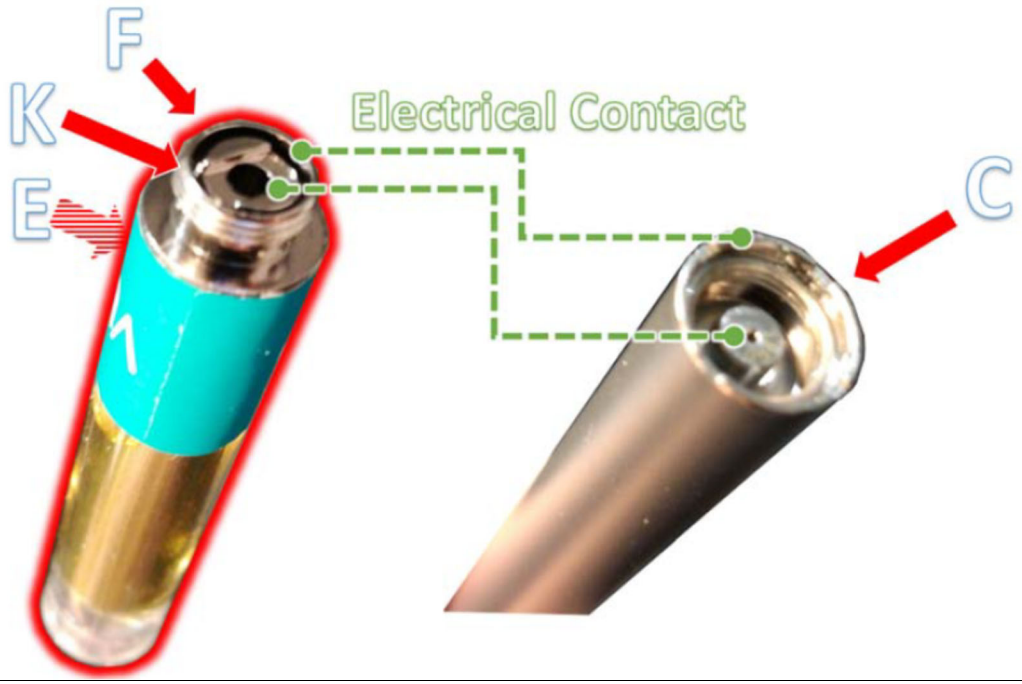

Claim 1	
	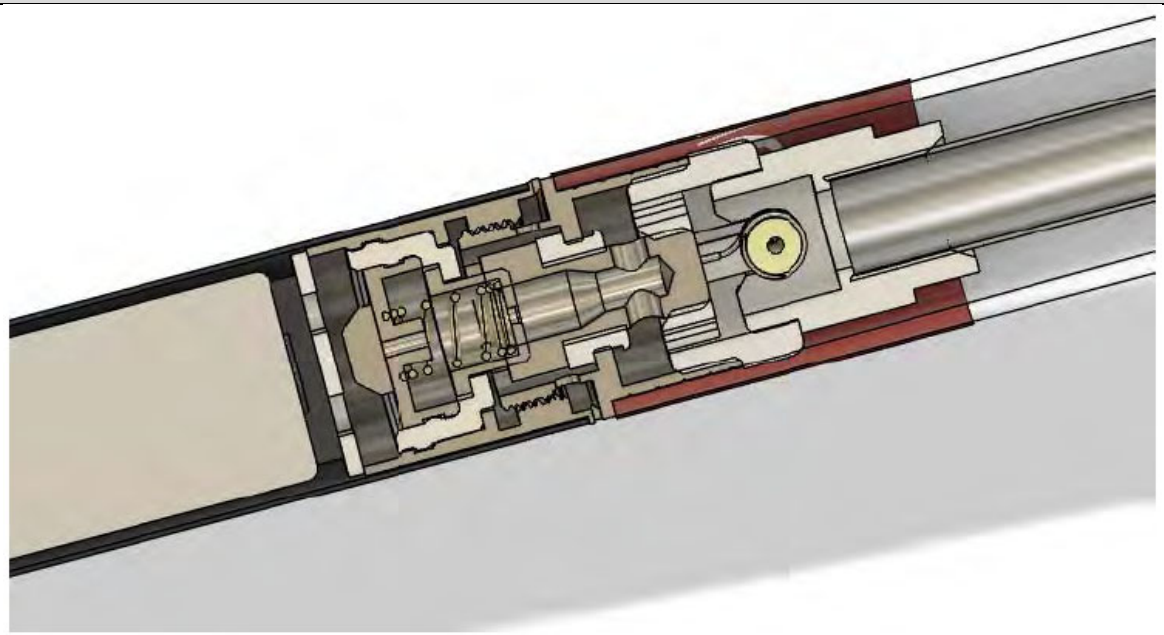

[1.6] wherein the housing includes a solution holding medium adapted to hold a solution in the interior of the housing,	The VUSE Ciro comprises a cartridge with a housing [E] that includes a solution holding medium [L] adapted to hold a solution. 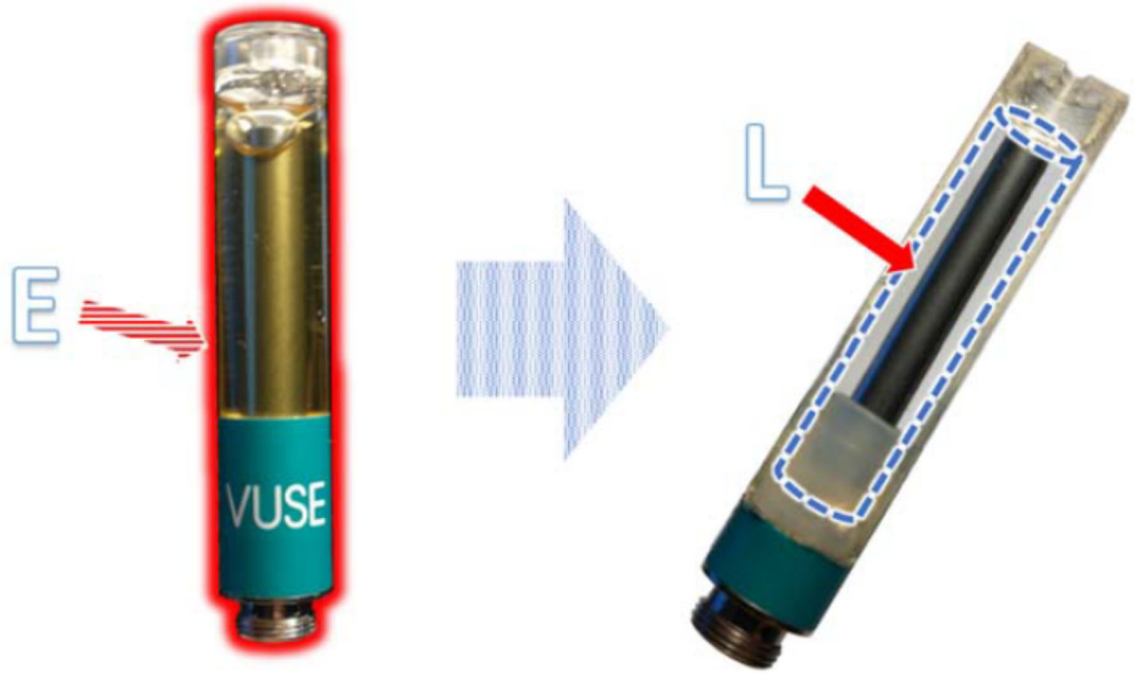

Claim 1	
	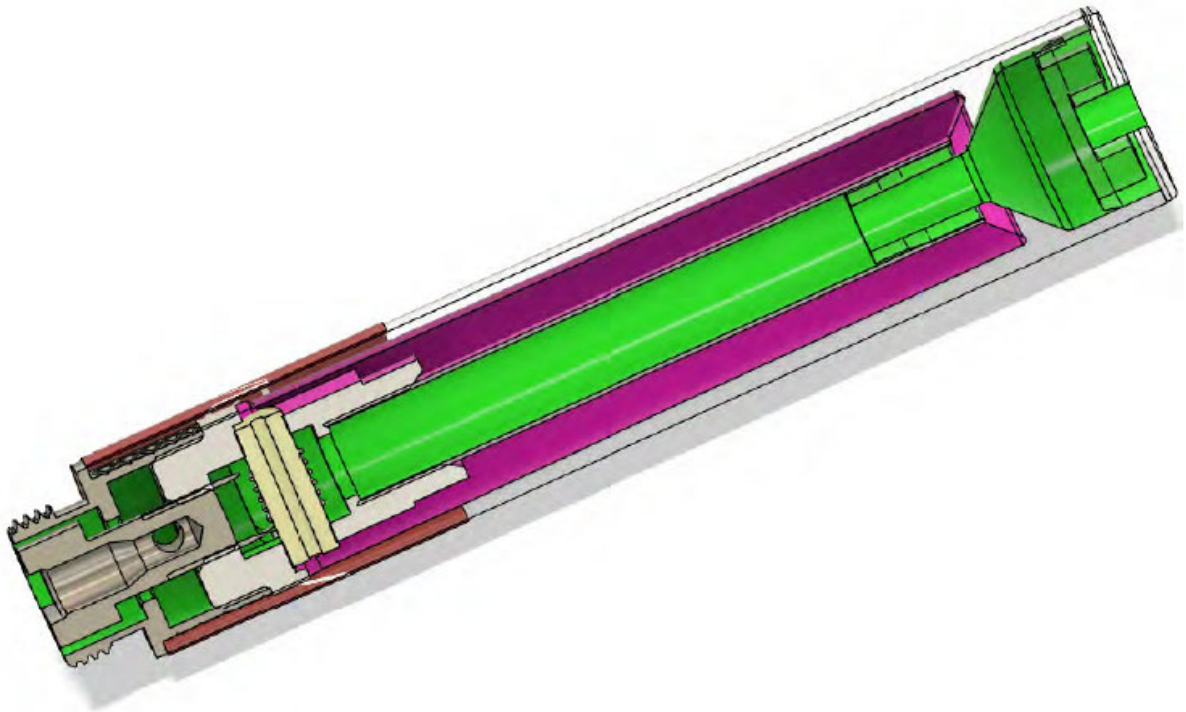 (solution holding medium shown in purple)

[1.7] wherein the housing includes a heating element located in the interior of the housing, wherein the heating element extends transversely across the airflow passageway, wherein the airflow through the passageway passes on both transverse sides of the element,	The VUSE Ciro comprises a cartridge with a heating element [N] that extends transversely across the airflow passageway [J] and airflow passes on both transverse sides of the heating element. 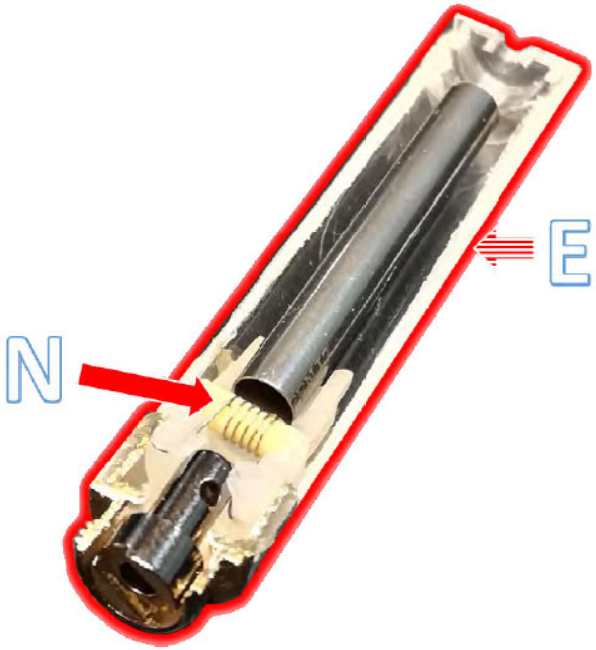

	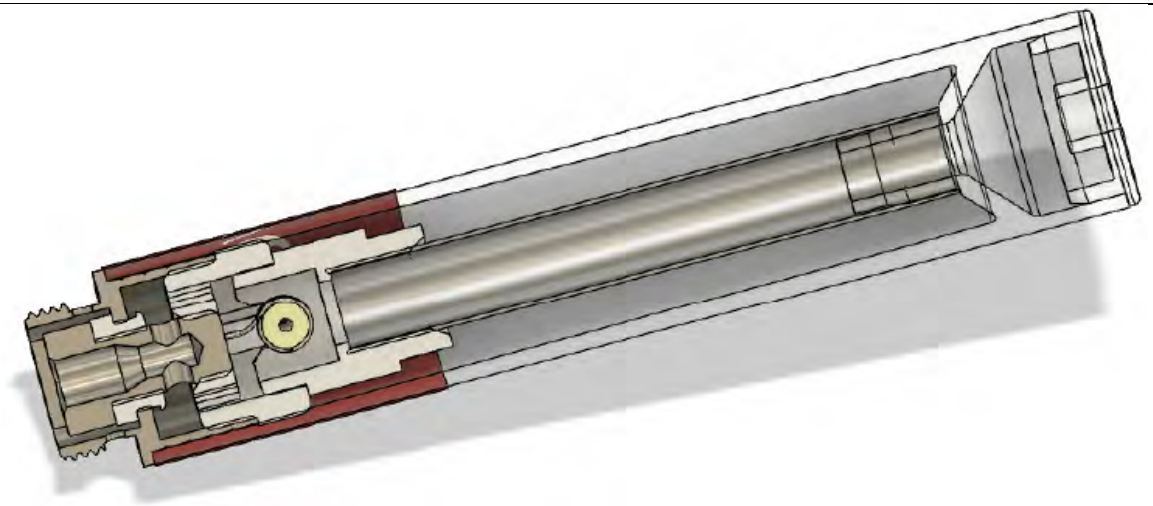 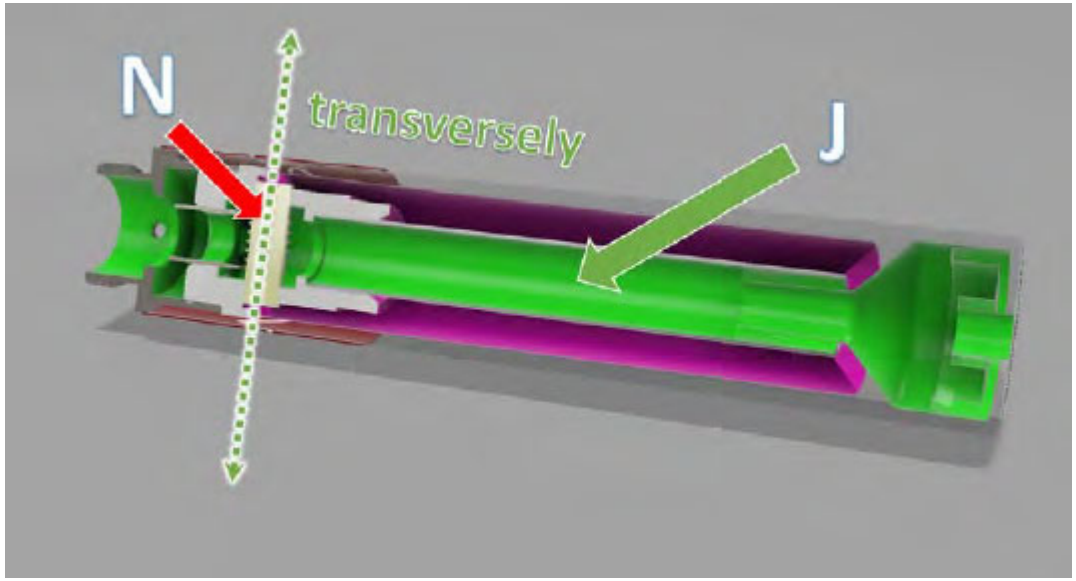

	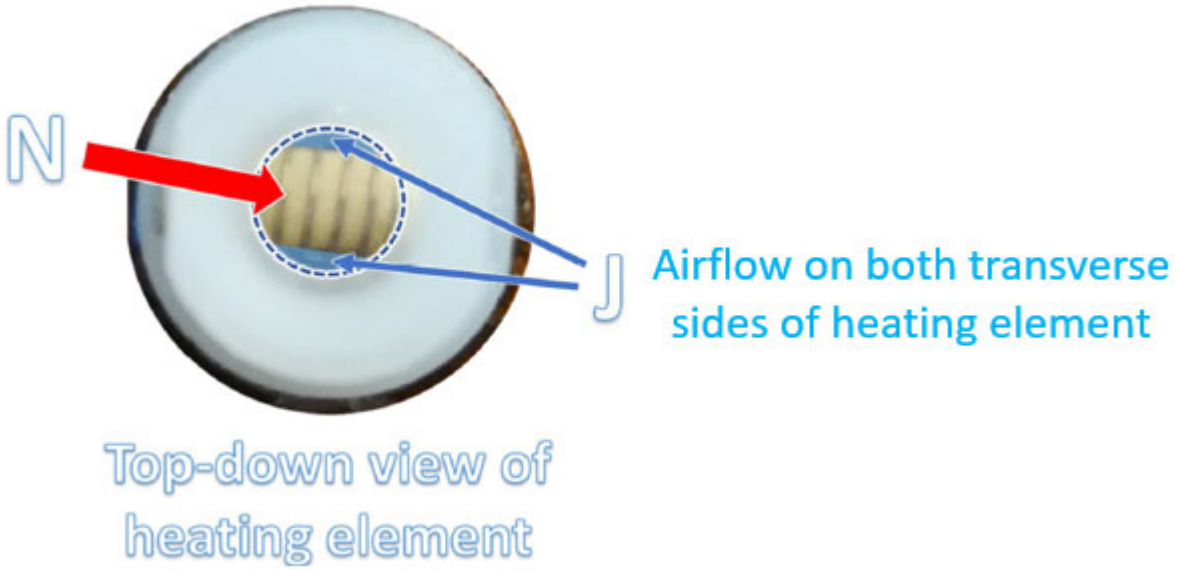 N J Airflow on both transverse sides of heating element Top-down view of heating element

Claim 1	
	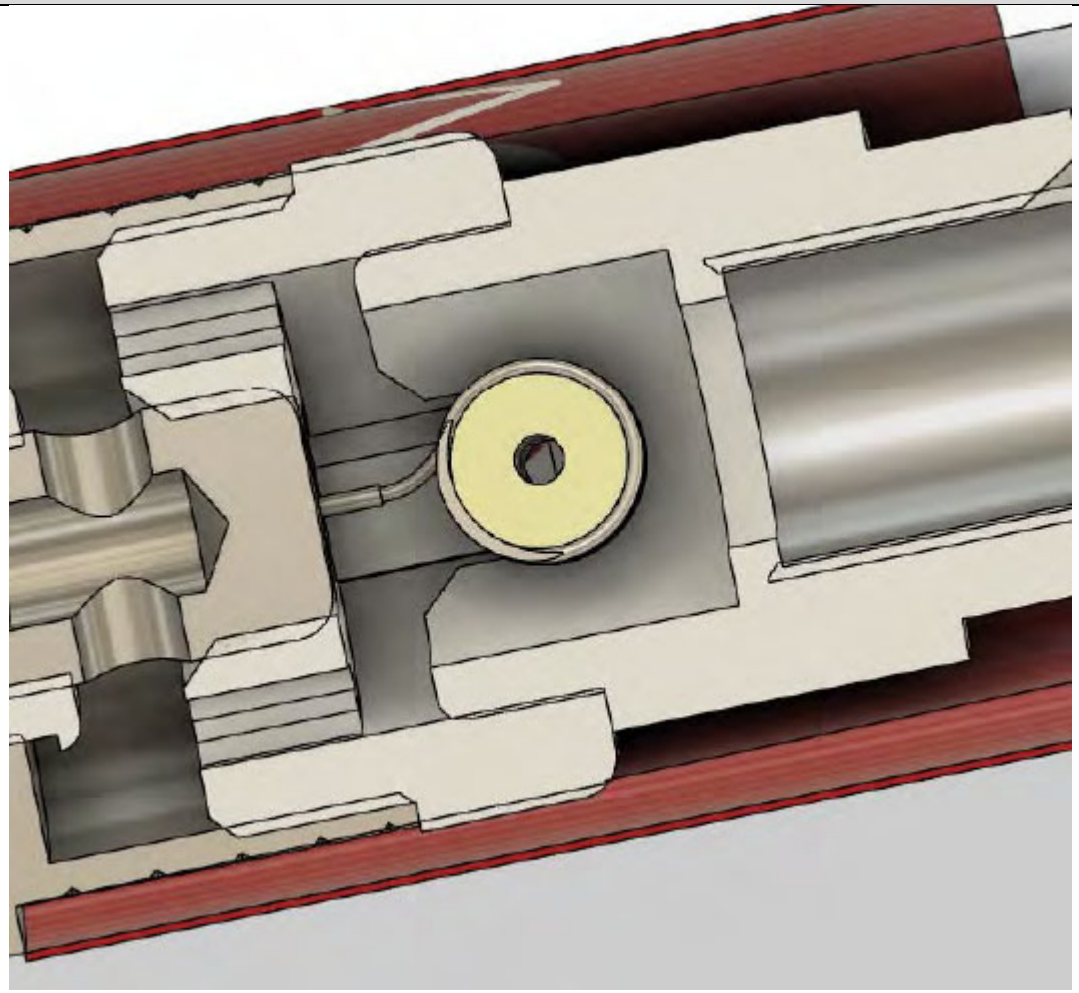

Claim 1	
[1.8] wherein the solution holding medium surrounds the airflow passageway and the heating element in the interior of the housing and intermediate of the first end and the second end,	The VUSE Ciro comprises a cartridge where the solution holding medium [L] surrounds the airflow passageway [J] and the heating element [N] in the interior of the housing intermediate of the first [F] and second end [G]. 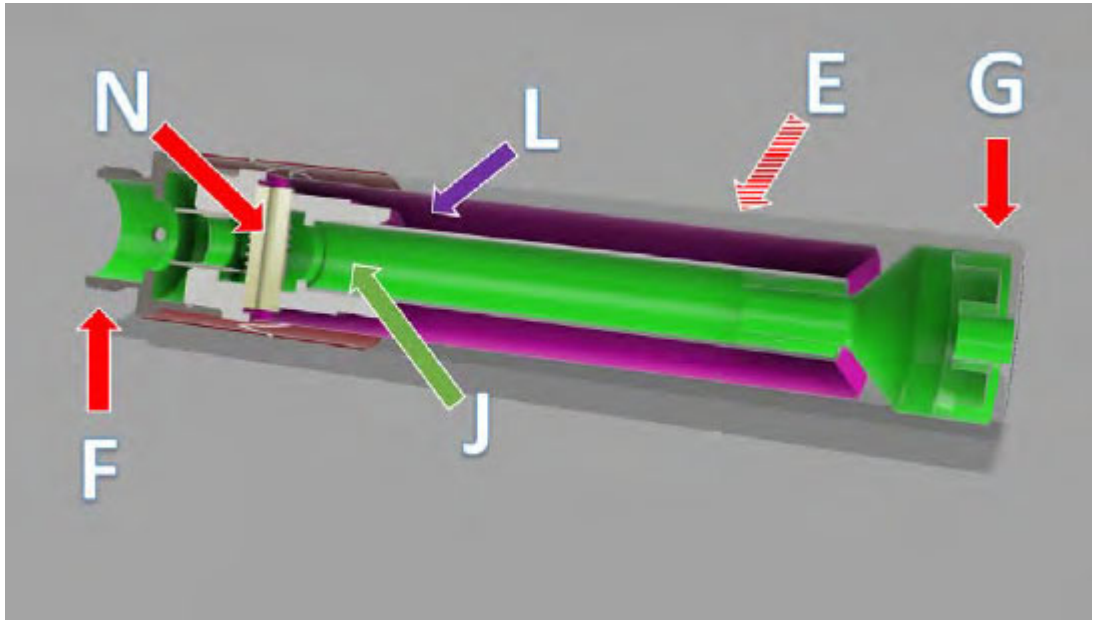

Claim 1	
[1.9] wherein the heating element is electrically configured to vaporize at least a portion of the solution to be contained in the solution holding medium for oral provision to an individual in an airflow from the second aperture responsive to electrical power received from the battery through the electrically conductive portions of the cartridge and the power source.	The VUSE Ciro comprises a cartridge with a heating element [N] that is electrically configured to vaporize the solution for oral provision to an individual in an airflow from the second aperture responsive to electrical power received from the battery [B] through the electrically conductive portions of the cartridge [K] and power source [C].

Claim 2

Claim 2	
2. The cartridge of claim 1, wherein the heating element is a coil having a maximum diameter, the airflow passageway having a length having a circular cross section having a diameter along a majority of the length, the maximum diameter of the coil being smaller than the diameter of the circular cross section of the length of the airflow passageway.	The VUSE Ciro comprises the cartridge of claim 1, wherein the heating element [N] is a coil [T] having a maximum diameter, the airflow passageway [J] having a length having a circular cross section having a diameter along a majority of the length, the maximum diameter of the coil [T] being smaller than the diameter of the circular cross section of the length of the airflow passageway [J].

Claim 2	
	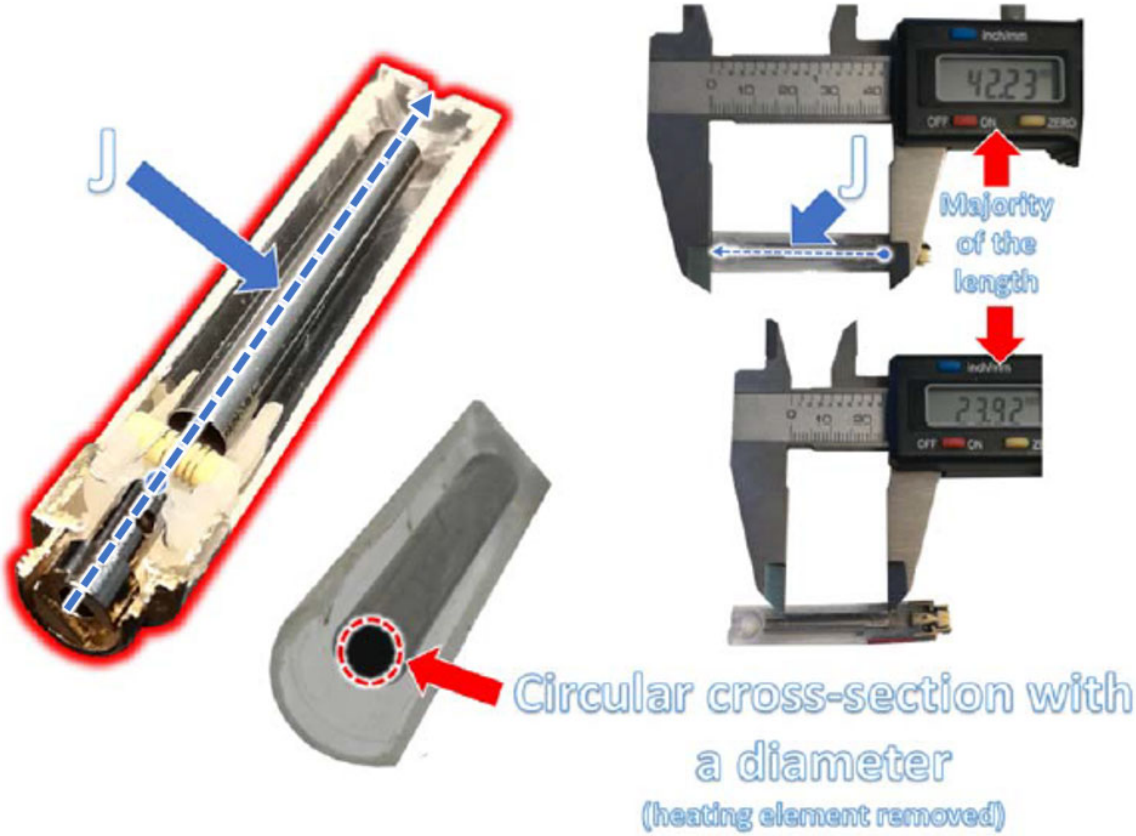 J J Majority of the length Circular cross-section with a diameter (heating element removed)

Claim 2	

Claim 3

Claim 3	
3. The cartridge of claim 2, wherein the first aperture on the first end is located centrally and axially with respect to the housing, the first aperture having a cross-sectional area measured perpendicular to a central longitudinal axis of the housing, the interior of the airflow passageway between the heating element and the	The VUSE Ciro comprises the cartridge of claim 2, wherein the first aperture [H] on the first end [F] is located centrally and axially with respect to the housing [E], the first aperture [H] having a cross-sectional area measured perpendicular to a central longitudinal axis [Q] of the housing [E], the interior of the airflow passageway [J] between the heating element [N] and the second aperture [I] being no smaller in cross-sectional area than the cross-sectional area of the first aperture [H].

Claim 3	
second aperture being no smaller in cross-sectional area than the cross-sectional area of the first aperture.	

Claim 3	
	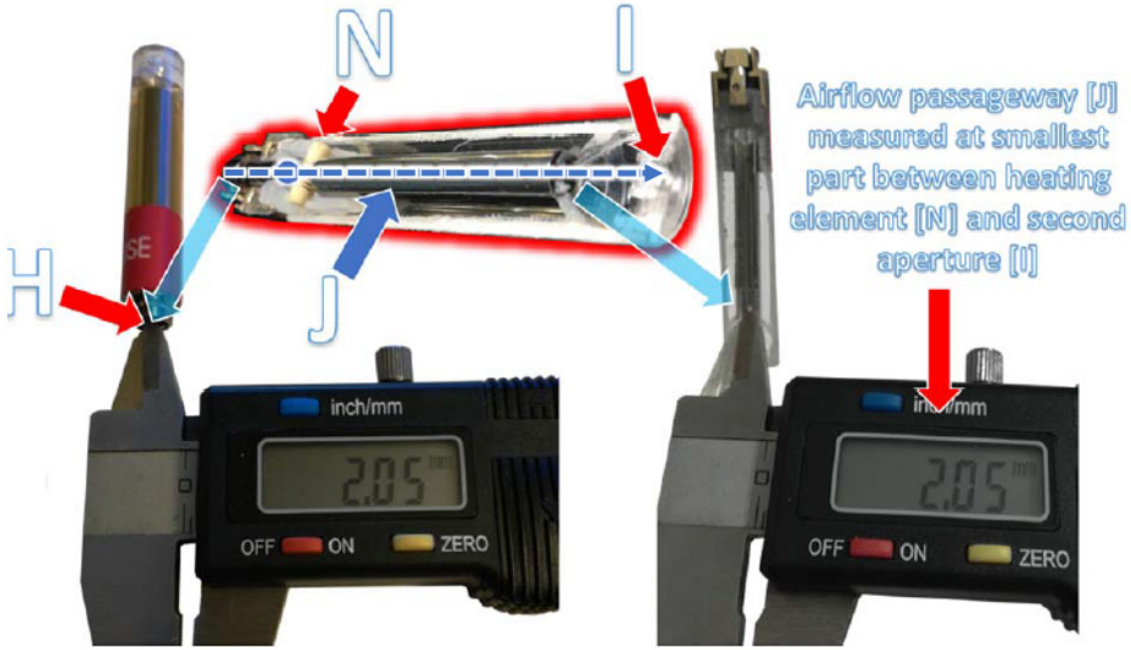

Claim 5

Claim 5	
5. The cartridge of claim 1, wherein the solution holding medium includes at least one of an absorbent material and a reservoir.	The VUSE Ciro comprises the cartridge of claim 1, wherein the solution holding medium [L] includes at least one of an absorbent material and a reservoir. The solution holding medium includes at least includes a wicking material [P], which is an absorbent material, as well as a reservoir [S].

Claim 5	
	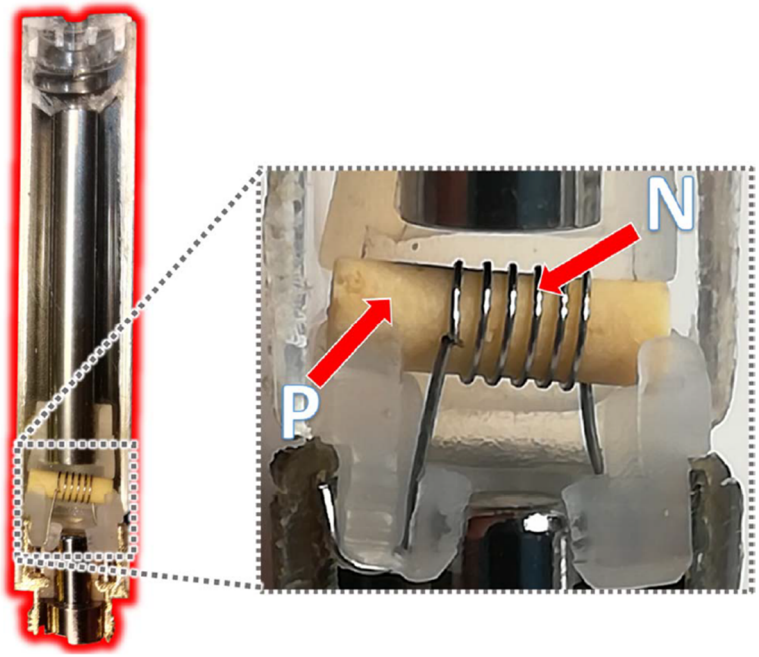

Claim 5	
	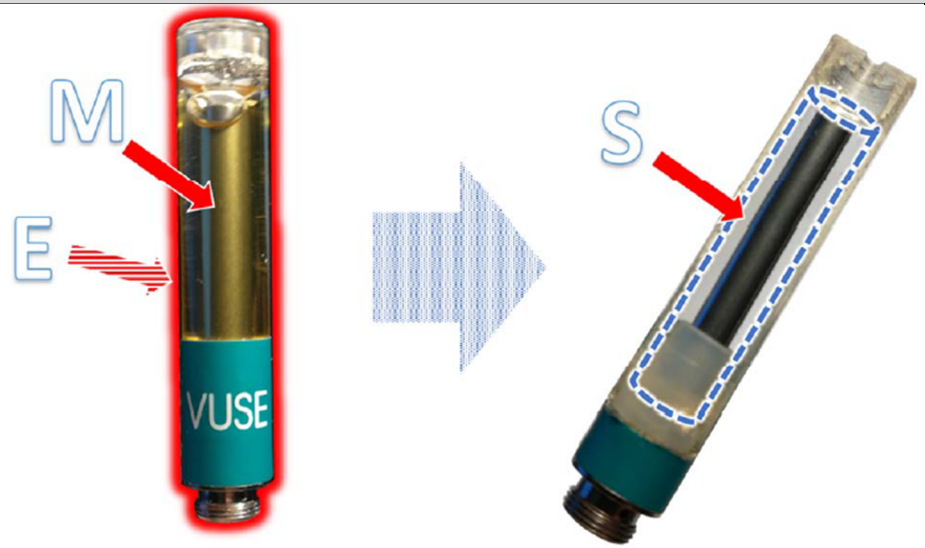

Claim 5	
	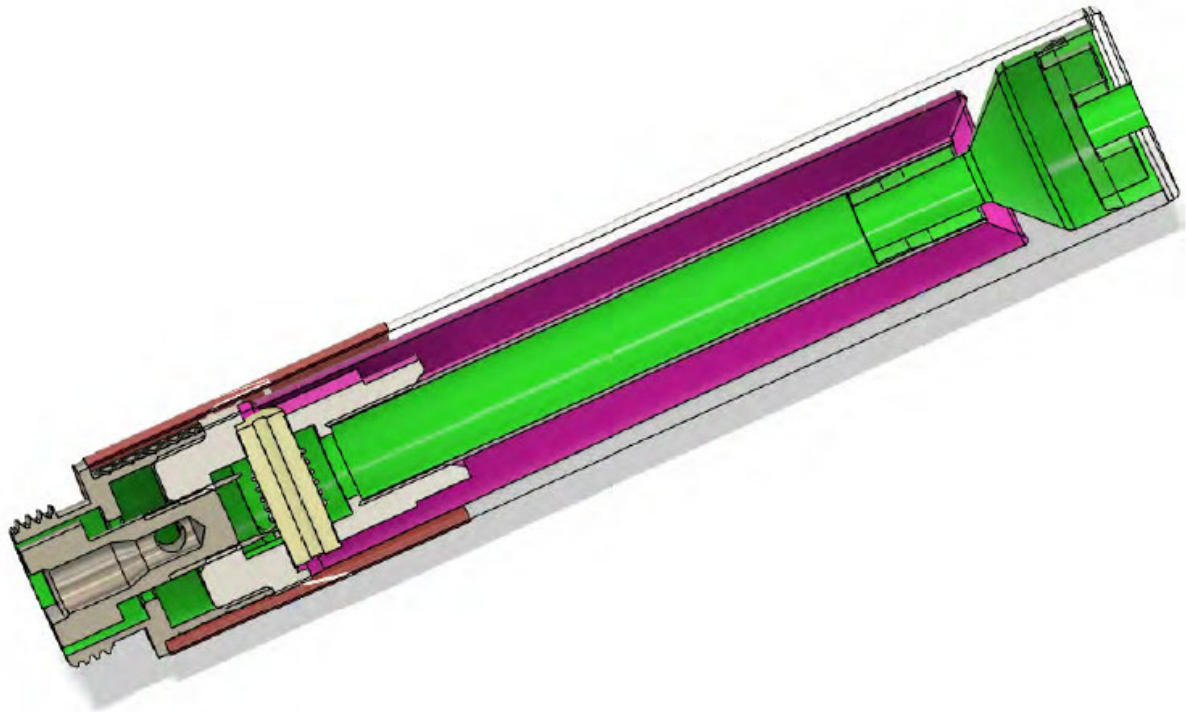 (solution holding medium reservoir shown in purple)

Claim 6

Claim 6	
6. The cartridge of claim 1, further comprising a solution in the solution holding medium, the solution comprising one of propylene glycol and nicotine.	The VUSE Ciro comprises the cartridge of claim 1, wherein the solution in the solution holding medium comprises one of propylene glycol and nicotine.

Claim 6	
	Table 1-2: Vuse Ciro Original E-Liquid Intentionally Added Ingredients **Ingredient** — **Chemical of Concern as Defined by 10 NYCRR 1006.1(h)** **Glycerin** — **Yes** **Propylene Glycol** — **Yes** **Water** — **No** **Nicotine** — **Yes** https://www.rjrvapor.com/nydisclosures/.

Claim 8

Claim 8	
[8.1] A cartridge configured to mechanically and electrically couple to a power source of an electronic vaporizer, the cartridge comprising:	The VUSE Ciro comprises a cartridge configured to mechanically and electrically couple to a power source of an electronic vaporizer. *See supra* Elements [1.3], [1.5].
[8.2] a housing having an interior and a solution holding medium reservoir adapted to hold a solution,	The VUSE Ciro comprises a cartridge comprising a housing having an interior and a solution holding medium reservoir [S] adapted to hold a solution [M]. *See supra* Elements [1.3], [1.6].

Claim 8	
	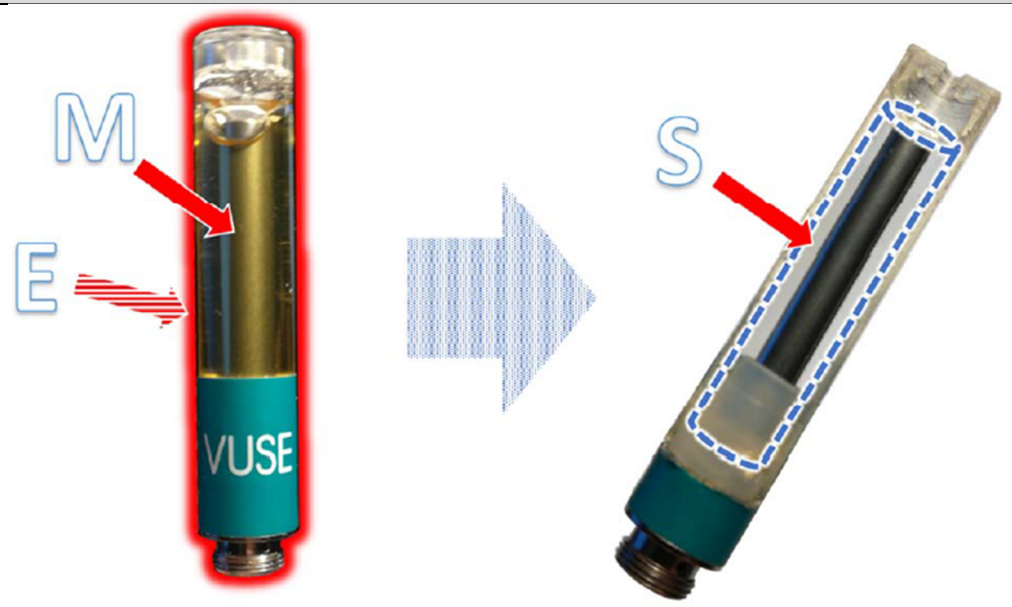

Claim 8	
	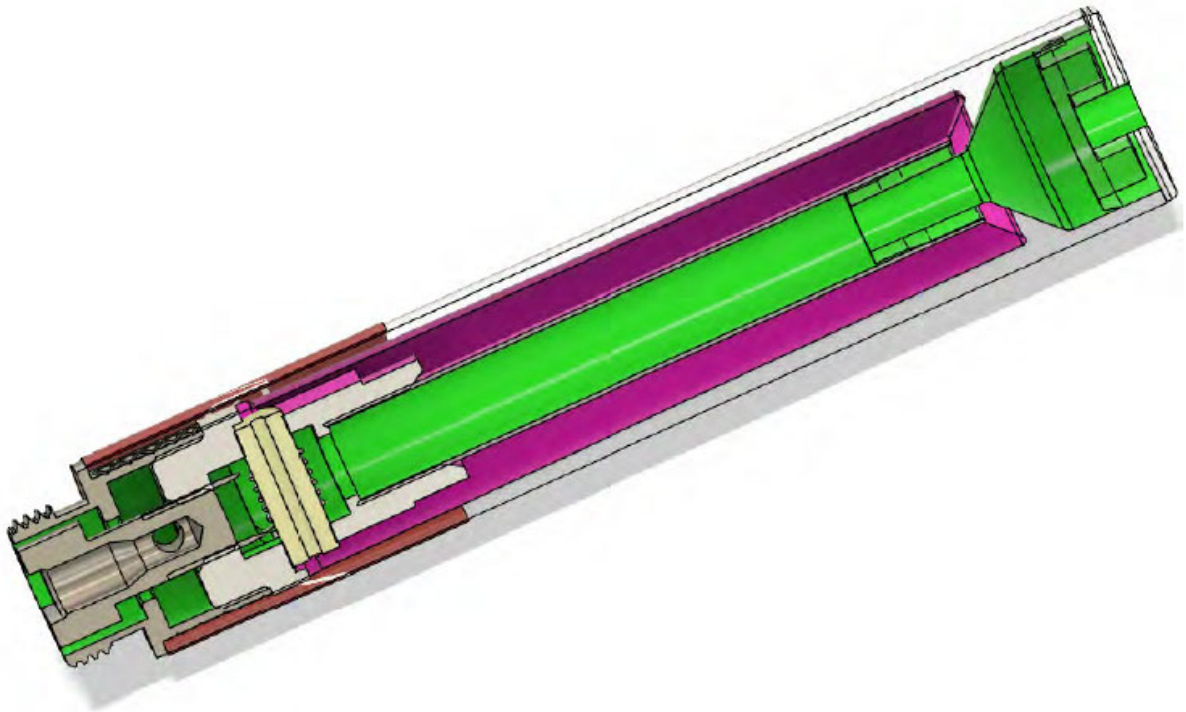 (solution holding medium shown in purple)
[8.3] the housing having a first end and a second end that is opposite the first end, the housing having a first aperture on the first end and a second aperture on the second end,	The VUSE Ciro comprises a cartridge comprising a housing having a first end and a second end that is opposite the first end, and the housing having a first aperture on the first end and a second aperture on the second end. *See supra* Element [1.3].
[8.4] the first end of the housing having an electrically conductive portion adapted to mechanically and electrically	The VUSE Ciro comprises a cartridge comprising a housing having a first end, wherein the first end of the housing has an electrically conductive portion adapted to mechanically and electrically couple to the electrically conductive portion of the power source.

Claim 8	
couple to the electrically conductive portion of the power source;	*See supra* Element [1.5].
[8.5] an airflow passageway in the interior of the housing extending centrally and axially with respect to the housing intermediate of the first aperture on the first end of the housing and the second aperture on the second end of the housing, the airflow passageway being configured to allow an airflow through the cartridge from the first aperture to the second aperture of the housing; and	The VUSE Ciro comprises a cartridge comprising an airflow passageway in the interior of the housing extending centrally and axially with respect to the housing intermediate of the first aperture on the first end of the housing and the second aperture on the second end of the housing, the airflow passageway being configured to allow an airflow through the cartridge from the first aperture to the second aperture of the housing. *See supra* Element [1.4].
[8.6] a heating element located in the interior of the housing, the heating element being located within and extending transversely across the airflow passageway, the airflow through the passageway passing on both transverse sides of the heating element, both the heating element and the airflow passageway being surrounded by the solution holding medium reservoir,	The VUSE Ciro comprises a cartridge comprising a heating element located in the interior of the housing, the heating element being located within and extending transversely across the airflow passageway, the airflow through the passageway passing on both transverse sides of the heating element. *See supra* Element [1.7]. As shown below, both the heating element [N] and the airflow passageway [J] are surrounded by the solution holding medium reservoir [S].

Claim 8	
	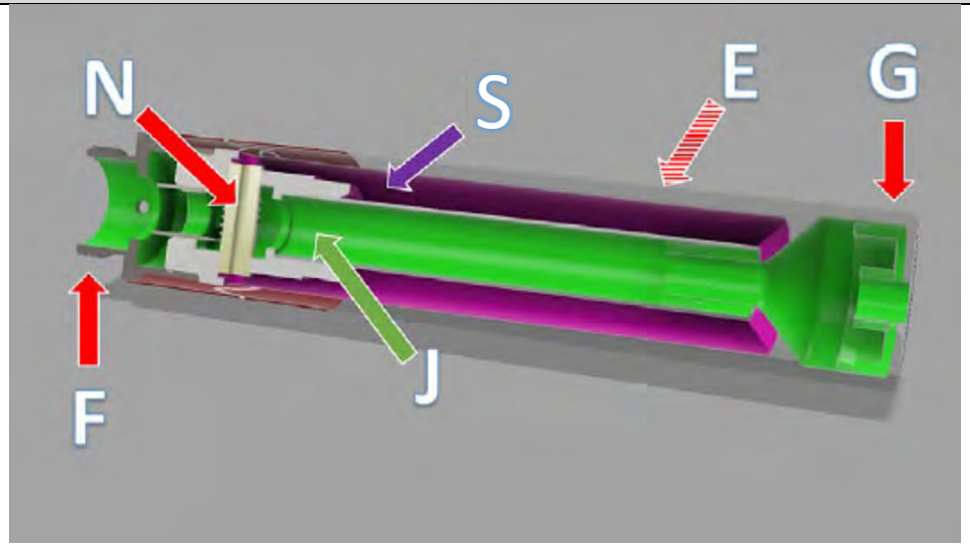
[8.7] the heating element being electrically configured to vaporize at least a portion of the solution to be contained in the solution holding medium reservoir for oral provision to an individual in an airflow from the second aperture responsive to electrical power received from the battery through the electrically conductive portions of the cartridge and the power source.	The VUSE Ciro comprises a cartridge comprising a heating element that is electrically configured to vaporize at least a portion of the solution to be contained in the solution holding medium reservoir for oral provision to an individual in an airflow from the second aperture responsive to electrical power received from the battery through the electrically conductive portions of the cartridge and the power source. *See supra* Element [1.9].

Claim 9

Claim 9	
9. The cartridge of claim 8, further in combination with the power source including a battery and the electrically conductive portion, the electrically conductive portion of the power source being mechanically and electrically coupled to the electrically conductive portion of the first end of the housing.	The VUSE Ciro comprises the cartridge of claim 8 [D] in combination with the power source [A] including a battery [B] and the electrically conductive portion [C], the electrically conductive portion [C] of the power source [A] being mechanically and electrically coupled to the electrically conductive portion [K] of the first end [F] of the housing [E]. 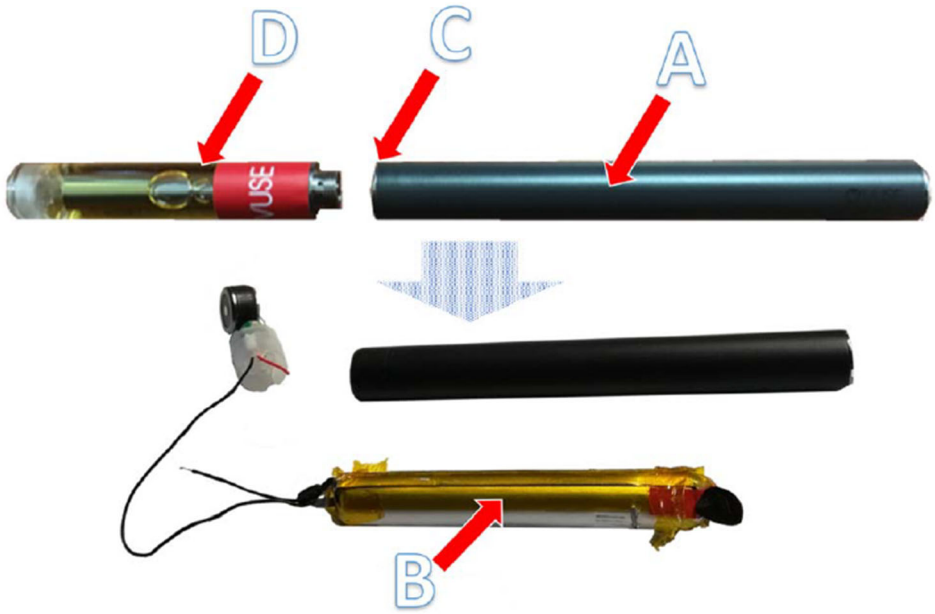

Claim 9	
	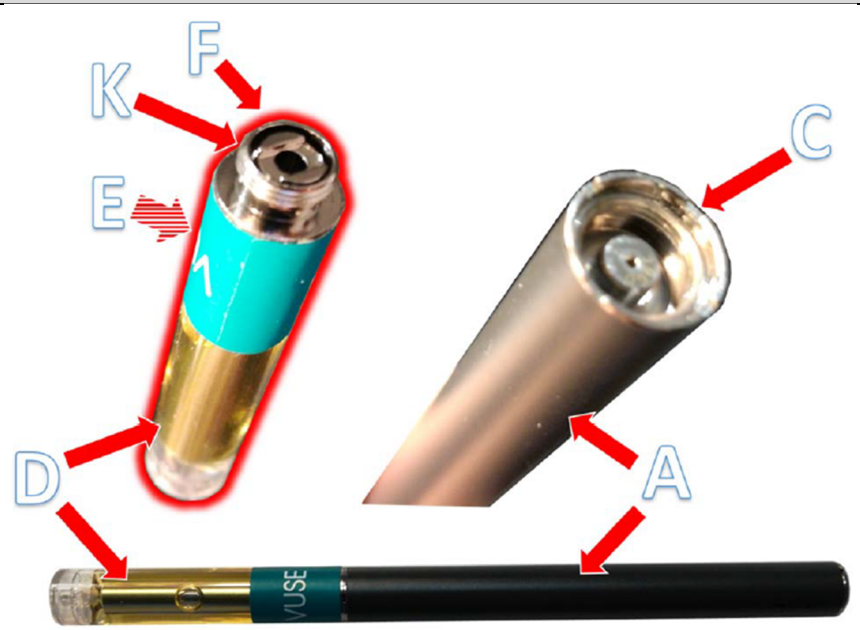 *See also supra* Elements [1.2], [1.5].

Claim 10

Claim 10	
10. The cartridge of claim 9, wherein the heating element is a coil having a maximum diameter, the airflow passageway having a length having a circular cross section having a diameter along a majority of the length, the	The VUSE Ciro comprises the cartridge of claim 9, wherein the heating element is a coil having a maximum diameter, the airflow passageway having a length having a circular cross section having a diameter along a majority of the length, the maximum diameter of the coil being smaller than the diameter of the circular cross section of the length of the airflow passageway. *See supra* Claim 2.

Claim 10	
maximum diameter of the coil being smaller than the diameter of the circular cross section of the length of the airflow passageway.	

Claim 11

Claim 11	
11. The cartridge of claim 10, wherein the first aperture on the first end is located centrally and axially with respect to the housing, the first aperture having a cross-sectional area measured perpendicular to a central longitudinal axis of the housing, the interior of the airflow passageway between the heating element and the second aperture being no smaller in cross-sectional area than the cross-sectional area of the first aperture.	The VUSE Ciro comprises the cartridge of claim 10, wherein the first aperture on the first end is located centrally and axially with respect to the housing, the first aperture having a cross-sectional area measured perpendicular to a central longitudinal axis of the housing, the interior of the airflow passageway between the heating element and the second aperture being no smaller in cross-sectional area than the cross-sectional area of the first aperture. *See supra* Claim 3.

Claim 13

Claim 13	
13. The cartridge of claim 8, wherein the solution holding	The VUSE Ciro comprises the cartridge of claim 8, wherein the solution holding medium reservoir includes an absorbent material.

Claim 13	
medium reservoir includes an absorbent material.	*See supra* Claim 5.

Claim 14

Claim 14	
14. The cartridge of claim 8, further comprising a solution in the solution holding medium reservoir, the solution comprising one of propylene glycol and nicotine.	The VUSE Ciro comprises the cartridge of claim 8, wherein the solution in the solution holding medium comprises one of propylene glycol and nicotine. *See supra* Claim 6.

Claim 16

Claim 16	
[16.1] A cartridge configured to mechanically and electrically couple to a power source of an electronic vaporizer, the cartridge comprising:	The VUSE Ciro comprises a cartridge configured to mechanically and electrically couple to a power source of an electronic vaporizer. *See supra* Elements [1.3], [1.5].
[16.2] a housing having an interior and a solution holding medium adapted to hold a solution in the interior of the housing,	The VUSE Ciro comprises a cartridge comprising a housing having an interior and a solution holding medium adapted to hold a solution in the interior of the housing. *See supra* Element [1.6].
[16.3] the housing having a first end and a second end that is opposite the first end, the housing having a central	The VUSE Ciro comprises a cartridge comprising a housing [E] having a first end [F] and a second end [G] that is opposite the first end [F], the housing [E] having a central longitudinal axis [Q] extending through the first end [F] and the second end [G].

Claim 16	
longitudinal axis extending through the first end and the second end,	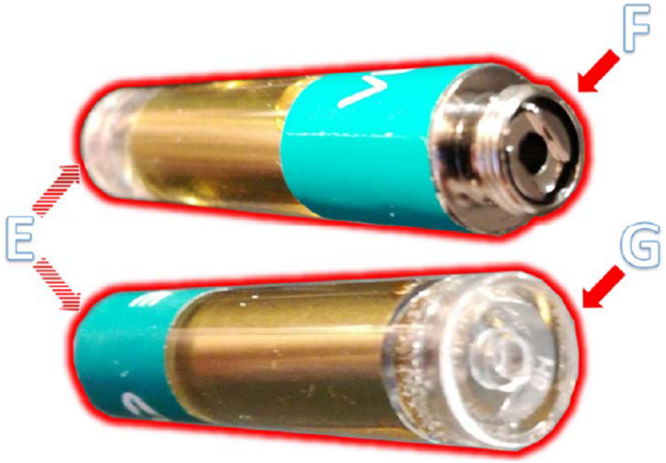

Claim 16	
	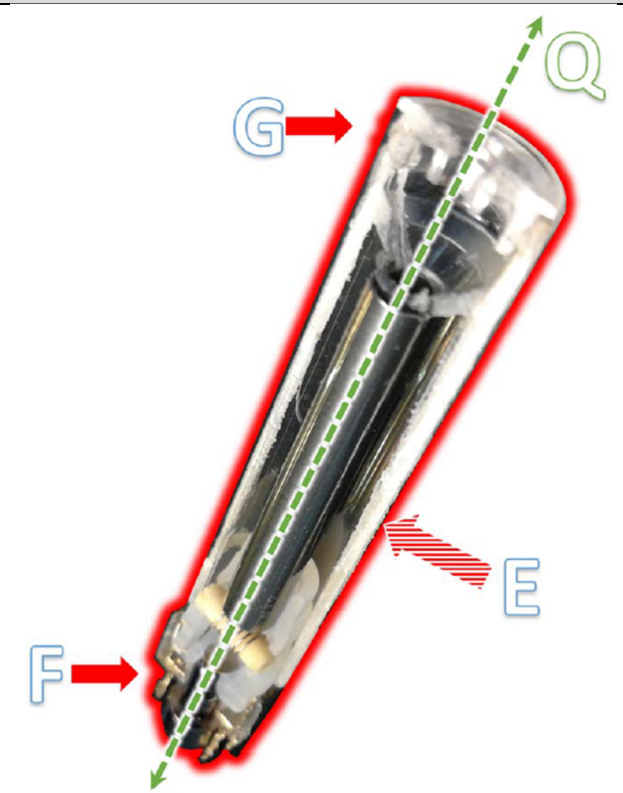
[16.4] the housing having a first aperture on the first end and a second aperture on the second end, the first aperture having a cross-sectional area measured perpendicular to the central longitudinal axis of the housing,	The VUSE Ciro comprises a cartridge comprising a housing [E] having a first aperture [H] on the first end [F] and a second aperture [I] on the second end [G], the first aperture [H] having a cross-sectional area measured perpendicular to the central longitudinal axis [Q] of the housing.

Claim 16	
	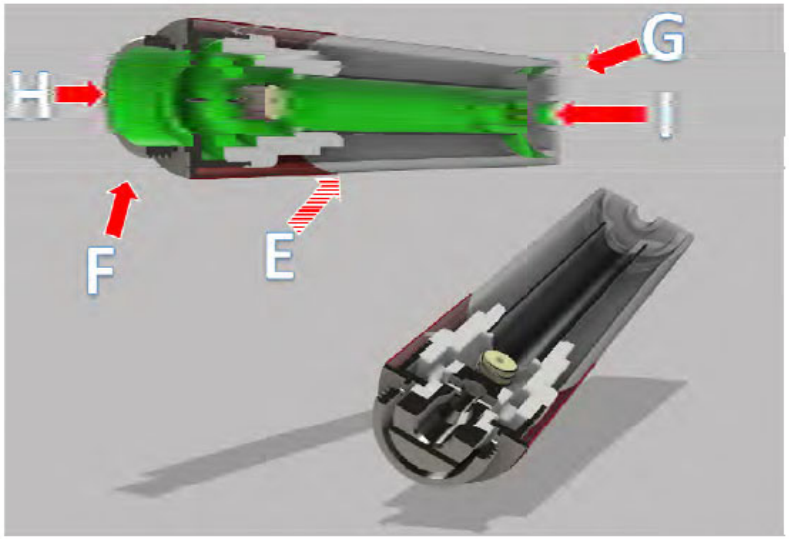

Claim 16	
[16.5] the first end of the housing having an electrically conductive portion adapted to mechanically and electrically couple to an electrically conductive portion of the power source;	The VUSE Ciro comprises a cartridge comprising a housing, wherein the first end of the housing has an electrically conductive portion adapted to mechanically and electrically couple to an electrically conductive portion of the power source. *See supra* Element [1.5].
[16.6] an airflow passageway in the interior of the housing,	The VUSE Ciro comprises a cartridge comprising a an airflow passageway in the interior of the housing, the airflow passageway having a length extending centrally and axially with respect to

Claim 16	
the airflow passageway having a length extending centrally and axially with respect to the housing intermediate of the first aperture on the first end of the housing and the second aperture on the second end of the housing, the airflow passageway being configured to allow an airflow through the cartridge from the first aperture to the second aperture of the housing,	the housing intermediate of the first aperture on the first end of the housing and the second aperture on the second end of the housing, the airflow passageway being configured to allow an airflow through the cartridge from the first aperture to the second aperture of the housing. *See supra* Element [1.4].
[16.7] the airflow passageway having an exterior adjacent to the solution holding medium along a majority of the length of the airflow passageway, the airflow passageway having an interior having a uniform cross-sectional area measured perpendicular to the central longitudinal axis of the housing and extending continuously along a majority of the length of the airflow passageway; and	The VUSE Ciro comprises a cartridge comprising a an airflow passageway [J] having an exterior adjacent to the solution holding medium [L] along a majority of the length of the airflow passageway [J], the airflow passageway [J] having an interior having a uniform cross-sectional area measured perpendicular to the central longitudinal axis [Q] of the housing [E] and extending continuously along a majority of the length of the airflow passageway [J].

Claim 16		
	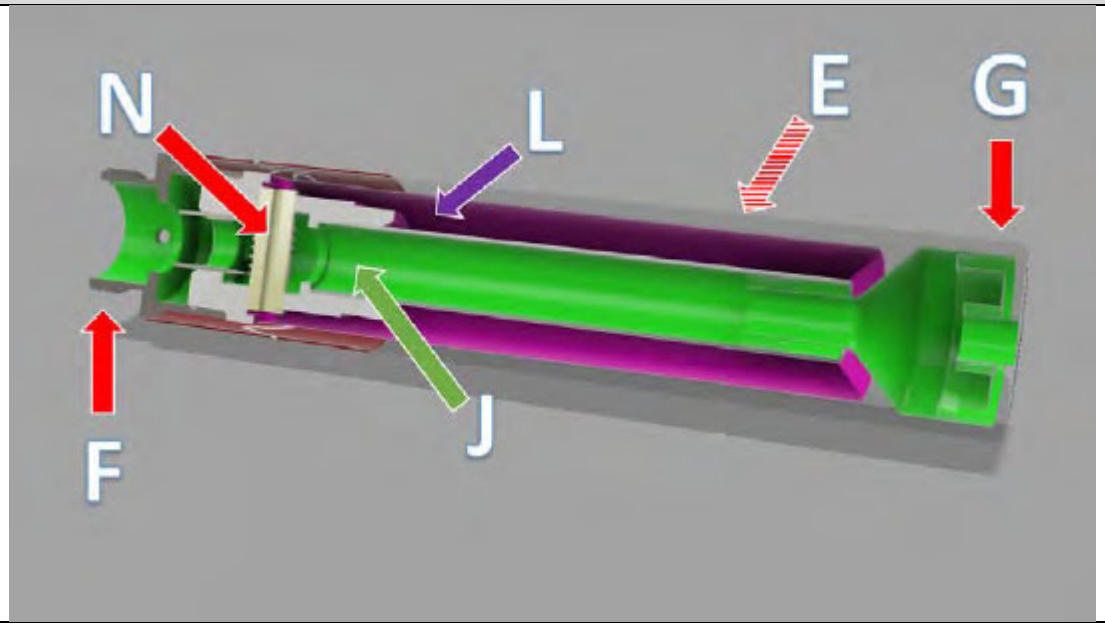	

Claim 16	
	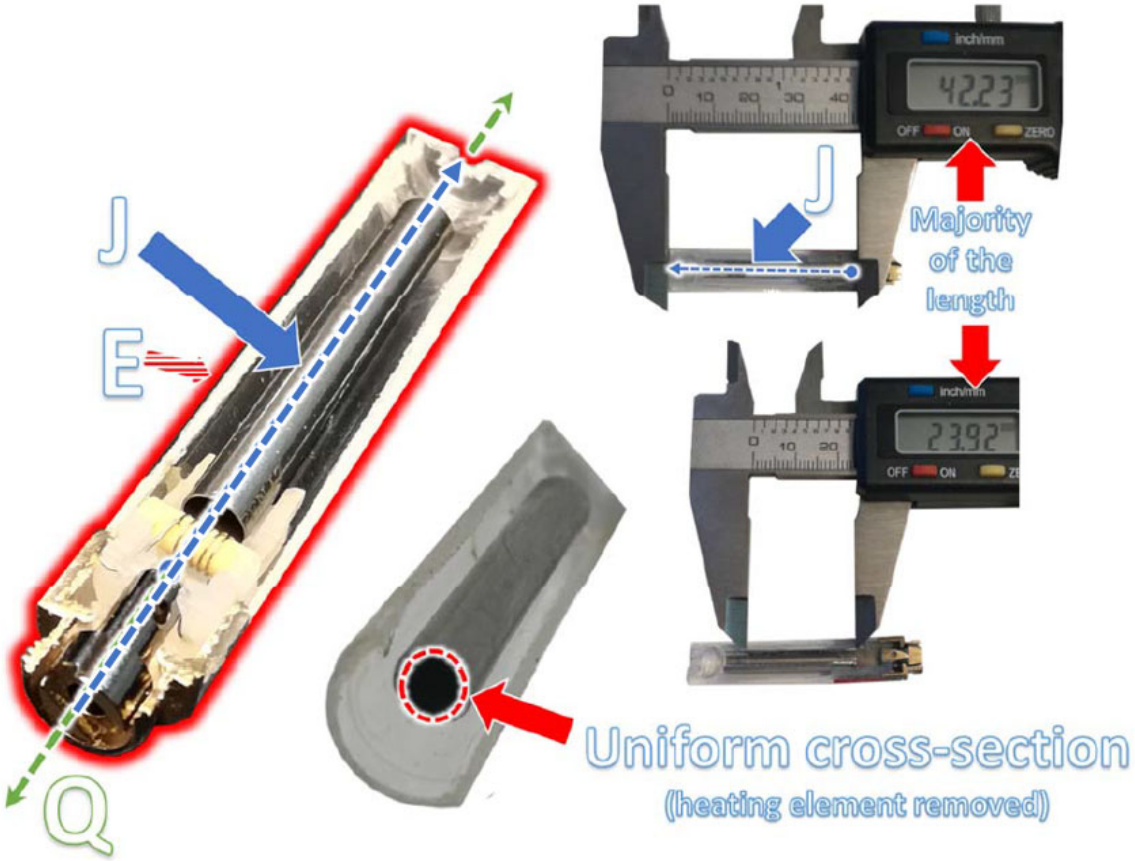
[16.8] a heating element located in the interior of the housing and extending transversely across the airflow passageway, the airflow through the passageway	The VUSE Ciro comprises a cartridge comprising a heating element located in the interior of the housing and extending transversely across the airflow passageway, the airflow through the passageway passing on both transverse sides of the heating element, a plane perpendicular to the central longitudinal axis of the housing passing through the heating element and the solution holding medium. *See supra* Element [1.7].

Claim 16	
passing on both transverse sides of the heating element, a plane perpendicular to the central longitudinal axis of the housing passing through the heating element and the solution holding medium,	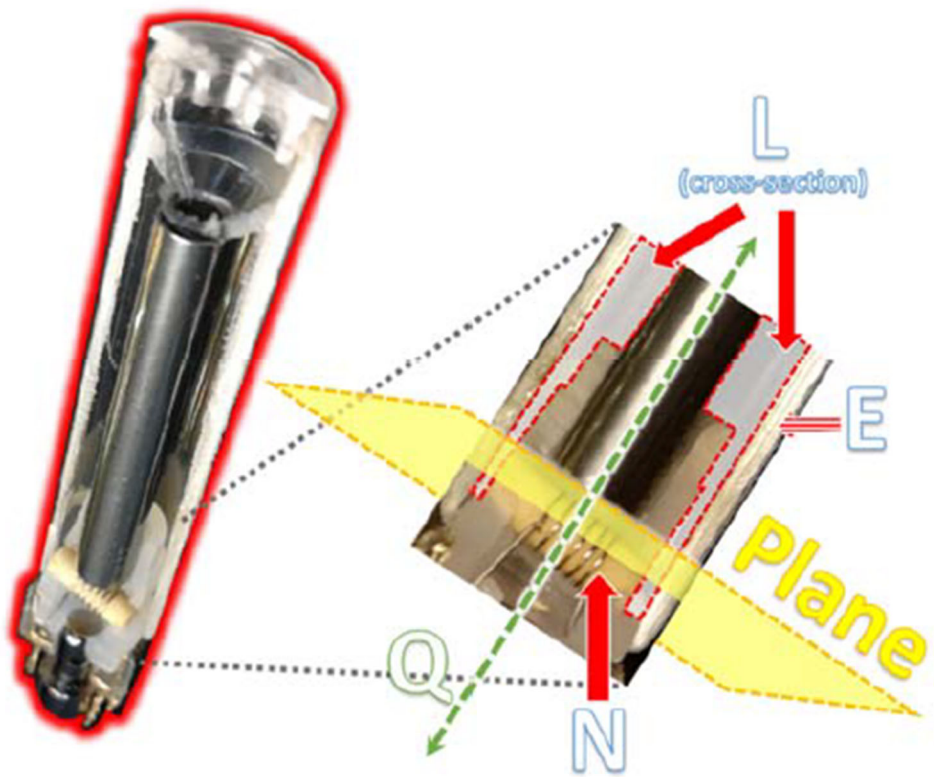
[16.9] the airflow passageway having an interior between the heating element and the second aperture no smaller in cross-sectional area than the cross-sectional area of the first aperture,	The VUSE Ciro comprises a cartridge comprising an airflow passageway having an interior between the heating element and the second aperture no smaller in cross-sectional area than the cross-sectional area of the first aperture. *See supra* Claim 3.

Claim 16	
[16.10] the heating element being connected to the electrically conductive portion of the first end of the housing, the heating element being electrically configured to vaporize at least a portion of the solution to be contained in the solution holding medium for oral provision to an individual in an airflow from the second aperture responsive to electrical power received from the power source through the electrically conductive portion of the cartridge.	The VUSE Ciro comprises a cartridge comprising a heating element [N] connected to the electrically conductive portion of the first end of the housing [K], the heating element being electrically configured to vaporize at least a portion of the solution to be contained in the solution holding medium for oral provision to an individual in an airflow from the second aperture responsive to electrical power received from the power source through the electrically conductive portion of the cartridge. *See supra* Element [1.9]. 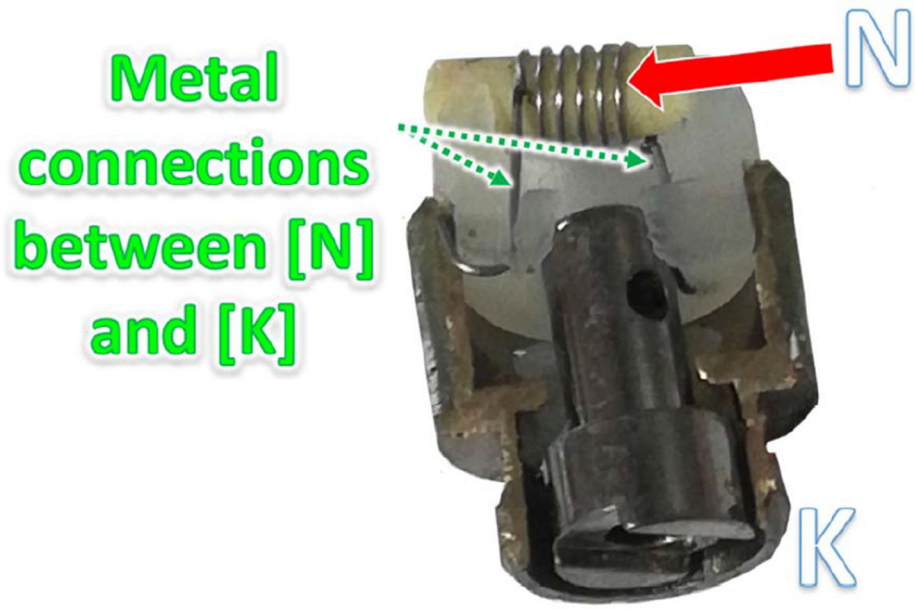

Claim 17

Claim 17	
17. The cartridge of claim 16, further in combination with the power source including a battery and the electrically conductive portion, the electrically conductive portion of the power source being mechanically and electrically coupled to the electrically conductive portion of the first end of the housing.	The VUSE Ciro comprises the cartridge of claim 16, further in combination with the power source including a battery and the electrically conductive portion, the electrically conductive portion of the power source being mechanically and electrically coupled to the electrically conductive portion of the first end of the housing. *See supra* Claim 9.

Claim 18

Claim 18	
18. The cartridge of claim 16, wherein the heating element is a coil having a maximum diameter and the uniform cross-sectional area of the airflow passageway is a circle having a diameter, the maximum diameter of the coil being smaller than the diameter of the circle of the uniform cross-sectional area of the airflow passageway.	The VUSE Ciro comprises the cartridge of claim 16, wherein the heating element is a coil having a maximum diameter and the uniform cross-sectional area of the airflow passageway is a circle having a diameter, the maximum diameter of the coil being smaller than the diameter of the circle of the uniform cross-sectional area of the airflow passageway. *See supra* Claim 2.

Claim 19

Claim 19	
19. The cartridge of claim 18, wherein the first aperture on the first end is located centrally and axially with respect to the housing.	The VUSE Ciro comprises the cartridge of claim 18, wherein the first aperture on the first end is located centrally and axially with respect to the housing. *See supra* Claim 3.

Claim 21

Claim 21	
21. The cartridge of claim 16, wherein the heating element is a coil having a maximum diameter and the uniform cross-sectional area of the airflow passageway is a circle having a diameter, the maximum diameter of the coil being smaller than the diameter of the circle of the uniform cross-sectional area of the airflow passageway.	The VUSE Ciro comprises the cartridge of claim 16, wherein the heating element is a coil having a maximum diameter and the uniform cross-sectional area of the airflow passageway is a circle having a diameter, the maximum diameter of the coil being smaller than the diameter of the circle of the uniform cross-sectional area of the airflow passageway. *See supra* Claim 2.

Claim 22

Claim 22	
22. The cartridge of claim 16, wherein the first aperture on the first end is located centrally and axially with respect to the housing.	The VUSE Ciro comprises the cartridge of claim 16, wherein the first aperture on the first end is located centrally and axially with respect to the housing. *See supra* Claim 3.

Claim 24

Claim 24	
24. The cartridge of claim 16, wherein the solution holding medium includes at least one of an absorbent material and a reservoir.	The VUSE Ciro comprises the cartridge of claim 16, wherein the solution holding medium includes at least one of an absorbent material and a reservoir. *See supra* Claim 5.

Claim 25

Claim 25	
25. The cartridge of claim 16, further comprising a solution, wherein the solution comprises one of propylene glycol and nicotine.	The VUSE Ciro comprises the cartridge of claim 16, further comprising a solution, wherein the solution comprises one of propylene glycol and nicotine. *See supra* Claim 6.

Claim 26

Claim 26	
26. The cartridge of claim 16, wherein the heating element is in operative connection with a wicking material, and the wicking material is operative to attract a portion of the solution from the solution holding medium located immediately adjacent opposite	The VUSE Ciro comprises the cartridge of claim 16, wherein the heating element [N] is in operative connection with a wicking material [P], and the wicking material [P] is operative to attract a portion of the solution [M] from the solution holding medium [L] located immediately adjacent opposite ends of the heating element [N] toward the heating element [N].

Claim 26	
ends of the heating element toward the heating element.	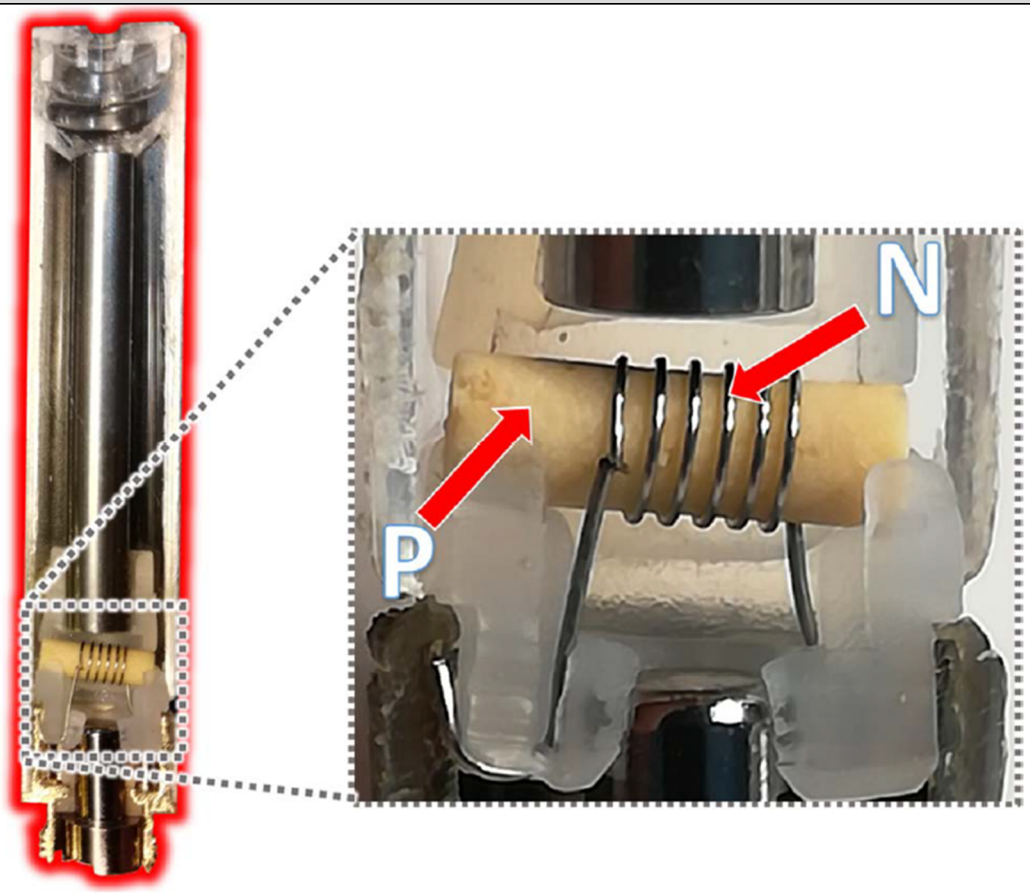

Claim 26	