UNITED STATES PATENT AND TRADEMARK OFFICE

BEFORE THE PATENT TRIAL AND APPEAL BOARD

Juul LABS Inc.

Petitioner,

v.

NJOY, LLC,

Patent Owner

IPR2024-00161
Patent 10,334,881

DECLARATION OF WILLIAM SINGHOSE, PH.D.

WEIL:\99917589\5\13858.0029

NJOY Exhibit 2022.001
Juul v. NJOY
IPR2024-00161

Table of Contents

I. INTRODUCTION 5

A. SUMMARY OF OPINIONS 5
B. BACKGROUND AND QUALIFICATIONS 5
C. PRIOR TESTIMONY AND COMPENSATION 9
D. BASES OF OPINIONS AND MATERIALS CONSIDERED 9

II. LEGAL STANDARDS 10

A. PERSON OF ORDINARY SKILL IN THE ART 11
B. CLAIM CONSTRUCTION 11
C. OBVIOUSNESS 13
D. SECONDARY CONSIDERATIONS OF NON-OBVIOUSNESS 15

III. OVERVIEW OF THE 881 PATENT 17

A. HOUSING 19
B. FIRST AND SECOND APERTURES 22
C. HEATING ELEMENT AND LIQUID STORAGE 24

IV. CLAIM CONSTRUCTION 28

A. CLAIM TERMS CONSTRUED BY THE ALJ IN THE RELATED ITC INVESTIGATION 28
1. "TRANSVERSELY" 28
B. OTHER TERMS REQUIRING CLAIM CONSTRUCTION 33
1. "HOUSING" 33
2. "END" 36
3. "AIRFLOW PASSAGEWAY" EXTENDING "CENTRALLY AND AXIALLY" WITH RESPECT TO THE HOUSING 40
C. CLAIM TERM THE BOARD PRELIMINARILY CONSTRUED 48
1. "HOUSING HAVING A FIRST APERTURE ON THE FIRST END [OF THE HOUSING]" 48

V. OVERVIEW OF ALLEGED PRIOR ART REFERENCES 61

NJOY Exhibit 2022.002
Juul v. NJOY
IPR2024-00161

A. OVERVIEW OF XIA **61**
1. XIA IS A THREE-PIECE DEVICE 73
2. SIMILARITIES BETWEEN XIA AND HAN 79
B. OVERVIEW OF WANG **81**
1. THE WANG DECLARATION DOES NOT SUPPORT THE EXISTENCE OF A CENTRAL AND AXIAL AIRFLOW PASSAGEWAY IN WANG 88
C. OVERVIEW OF FANG **91**

VI. GROUND 1: CLAIMS 1–27 WOULD NOT HAVE BEEN OBVIOUS BASED ON XIA OR XIA IN VIEW OF WANG AND/OR FANG. **97**

A. CLAIM 1 ..... **99**
1. LIMITATION [1.B2] – XIA 99
2. LIMITATION [1.B2] – XIA IN VIEW OF WANG AND/OR FANG 104
3. LIMITATION [1.C] – XIA 109
4. LIMITATION [1.C] – XIA IN VIEW OF WANG AND/OR FANG 117
5. LIMITATIONS [1.B1], [1.F], [1.G] – XIA 138
6. LACK OF MOTIVATION TO COMBINE XIA WITH WANG AND/OR FANG 143
7. NO EXPECTATION OF SUCCESS IN COMBINING XIA WITH WANG AND/OR FANG 143
B. CLAIMS 2-7 ..... **144**
1. CLAIM 2 – ADDITIONAL ISSUES 144
2. CLAIM 3 – ADDITIONAL ISSUES 145
3. CLAIM 7 – ADDITIONAL ISSUES 147
C. CLAIM 8 ..... **149**
1. LIMITATIONS [8.P], [8.A1], [8.C1] 149
2. LIMITATION [8.A2] 149
3. LIMITATION [8.B1] 149
4. LIMITATION [8.C2] 149
D. CLAIMS 9-15 ..... **150**
1. CLAIM 10 – ADDITIONAL ISSUES 150
2. CLAIM 11 – ADDITIONAL ISSUES 151
3. CLAIM 15 –ADDITIONAL ISSUES 151
E. CLAIM 16 ..... **151**
1. LIMITATIONS [16.P], [16.A1], [16.C1] 151
2. LIMITATION [16.A2] 152
3. LIMITATION [16.B1] 152
4. LIMITATION [16.B3] 152
5. LIMITATION [16.B4] 155
6. LIMITATION [16.C3] 155
F. CLAIMS 17-27 ..... **155**

NJOY Exhibit 2022.003
Juul v. NJOY
IPR2024-00161

1. CLAIM 18 – ADDITIONAL ISSUES 155
2. CLAIM 21 – ADDITIONAL ISSUES 156
3. CLAIM 26 – ADDITIONAL ISSUES 156
4. CLAIM 27 – ADDITIONAL ISSUES 162

VII. GROUND 2: CLAIMS 1–27 WOULD NOT HAVE BEEN OBVIOUS BASED ON WANG OR WANG IN VIEW OF FANG 162

A. WANG DOES NOT RENDER OBVIOUS THE CHALLENGED CLAIMS 164
1. CLAIMS 1, 8, 16 (INDEPENDENT CLAIMS) 164
2. CLAIMS 4, 12, 20, 23 176
3. CLAIM 26 177
4. CLAIMS 2, 3, 7, 10, 11, 15, 18, 21, 27 AND LIMITATION [16.B4] 178
B. WANG IN COMBINATION WITH FANG DOES NOT RENDER OBVIOUS THE CHALLENGED CLAIMS 180
1. NO MOTIVATION TO COMBINE WANG WITH FANG WITH A REASONABLE EXPECTATION OF SUCCESS 180
2. CLAIMS 1, 8, 16 (INDEPENDENT CLAIMS) 189
3. CLAIMS 4, 12, 20, 23 191
4. CLAIM 26 192
5. CLAIMS 2, 7, 10, 15, 18, 21, 27 AND LIMITATION [16.B4] 192
6. CLAIMS 3, 11 196

VIII. SECONDARY CONSIDERATIONS 197

A. NEXUS 197
B. FUMA E-CIGARETTE EMBODIES THE CHALLENGED CLAIMS OF THE 881 PATENT 200
1. CLAIM 1 200
2. CLAIM 2 213
3. CLAIM 3 216
4. CLAIM 4 217
5. CLAIM 5 218
6. CLAIM 6 219
7. CLAIM 7 221
8. CLAIM 8 222
9. CLAIM 9 225
10. CLAIM 10 226
11. CLAIM 11 226
12. CLAIM 12 226

13. CLAIM 13 227
14. CLAIM 14 227
15. CLAIM 15 228
16. CLAIM 16 228
17. CLAIM 17 237
18. CLAIM 18 237
19. CLAIM 19 240
20. CLAIM 20 240
21. CLAIM 21 240
22. CLAIM 22 240
23. CLAIM 23 241
24. CLAIM 24 241
25. CLAIM 25 241
26. CLAIM 26 241
27. CLAIM 27 242
C. COMMERCIAL SUCCESS 242
D. INDUSTRY PRAISE, COPYING, AND LICENSING 243

IX. CONCLUSION 265

NJOY Exhibit 2022.005
Juul v. NJOY
IPR2024-00161

I. Introduction

1. I have been retained as an independent expert by Patent Owner NJOY, LLC ("NJOY" or "Patent Owner") in connection with IPR2024-00161. NJOY has asked me to investigate and opine on issues related to claim construction and the validity of certain claims of U.S. Patent No. 10,334,881 (the "881 Patent"). I have prepared this declaration in support of NJOY's Patent Owner Responses.

2. This declaration contains my opinions about the technology claimed in the 881 Patent and the grounds asserted against claims 1–27 of the 881 Patent by Petitioner Juul Labs, Inc. ("Juul" or "Petitioner").

A. Summary of Opinions

3. It is my opinion, based on my experience, knowledge of the art for the challenged 881 Patent, analysis of references, and consideration of the factual record in this case, that the challenged claims are valid because the asserted prior art does not render the challenged claims obvious.

4. I will provide detailed reasons for the validity of the challenged claims in my Validity Section below and I will justify my claim interpretations in my Claim Construction section below.

B. Background and Qualifications

5. I believe that I am well qualified to serve as a technical expert in this matter based upon my education and work experience.

6. I am a Professor of Mechanical Engineering at the Georgia Institute of Technology ("Georgia Tech"). I received a B.S. in Mechanical Engineering from the Massachusetts Institute of Technology ("MIT") in 1990. I then received an M.S. in Mechanical Engineering from Stanford University in 1992. I then received a Ph.D. in Mechanical Engineering from MIT in 1997. After receiving my Ph.D., I was a postdoctoral researcher at MIT before becoming a professor at Georgia Tech in 1998.

7. Based on my work experience, described in my curriculum vitae and in more detail below, I am knowledgeable about the subject matter of the 881 patent, and the related prior art. Specifically, my qualifications as an expert in the general field of product design, and the more specific areas of consumer electronics, electronic nicotine delivery systems, and replaceable cartridges, stem from my prior industry work experience, as well as my experience as a Professor in the Woodruff School of Mechanical Engineering at Georgia Tech performing research, teaching, and consulting.

8. In my current position at Georgia Tech, I primarily teach courses in mechanical design, system dynamics, and controls. I also lead teams of professors,

post-docs, graduate students, and undergraduate students that conduct research in mechanical design, dynamics, controls, automation, robotics, and product analysis. During my more than 25 years at Georgia Tech, I have also had visiting appointments at MIT, Stanford, the Polytechnic University of Madrid, and the Tokyo Institute of Technology.

9. At various times in my career I have also worked as a full-time mechanical engineer for several companies, including Walt Disney World, Apple Computers, Inc., Convolve, Inc., and Google. For Walt Disney World, I designed and developed a number of structures for the park's rides, including, but not limited to, support stands for Space Mountain control consoles and structural supports for Star Jets. For Apple Computers, I designed and developed computer monitors with built-in speakers and microphones. As part of my work, I conducted numerous experiments using ultra-high quality microphones to measure the sound quality emitted from prototypes of our design. These tests were conducted in both a semi-anechoic chamber and a high-altitude (partial vacuum) chamber. For Convolve, Inc., I developed control systems for automation machinery and laser interferometer sensors. For Google, I designed several consumer electronic products that were either hand-held or in a

"wearable" form factor. One of the projects was a hand-held device that utilized replaceable supply cartridges.

10. In addition to my engineering experience as a professor and an engineer, I have commercialized technology developed in my research group at Georgia Tech by founding two companies: CAMotion Cranes and InVekTek. CAMotion Cranes designed and installed crane control systems that decrease payload swing, automatically avoid obstacles, and improve crane safety. These improvements are achieved through sensor systems and control methods that my research group developed, patented, and deployed. CAMotion Cranes was acquired by PAR Systems in 2013. InVekTek develops and commercializes control systems for large robotic and industrial material-handling systems. InVekTek products include control systems that read sensor signals and accurately control machine actuators.

11. Finally, I also have previous litigation experience in the specific subject matter of the 881 patent. I served as a technical expert in ITC Investigation No. 337-TA-1139, Certain Electronic Nicotine Delivery Systems and Components Thereof. My work on that matter involved analyzing the validity of e-cigarette patents, reviewing prior art, and conducting tests on more than 15 different vaporizers. I wrote three (3) expert reports and was deposed on my opinions. I also served as a technical

NJOY Exhibit 2022.009
Juul v. NJOY
IPR2024-00161

expert in ITC Investigation No. 337-TA-1368, Certain Vaporizer Devices, Cartridges Used Therewith, and Components Thereof. My work on that matter involved analyzing the validity of a vaporizer patent, reviewing prior art, and conducting tests on three different types of vaporizers. I wrote two (2) expert reports, was deposed, and testified at the hearing about my opinions.

12. My CV is attached as Appendix 1, which includes a more detailed list of my qualifications.

C. Prior Testimony and Compensation

13. A list of the cases in which I have testified as an expert at trial or by deposition over the last five years is included in Appendix 2.

14. I am being compensated for my work related to this investigation at my standard rate of $875/hour. I am also being reimbursed for travel and reasonable out-of-pocket expenses. My compensation does not depend in any way on the outcome of this investigation or the particular opinions I express, or the testimony I provide.

D. Bases of Opinions and Materials Considered

15. In forming the opinions set forth in this report, I have considered and relied upon my education, knowledge of the relevant field, and my experience, as well

as the perspective of a person of ordinary skill in the art. I have reviewed and considered the materials cited in this report.

16. In testifying, I may use some or all of the data or other documents and information identified in this report, additional data or other information identified in discovery in this matter, as well as any materials relied upon by Juul or its experts, to support or summarize my opinions. In addition, I may supplement those materials with other materials, demonstrative exhibits, or charts to provide additional context, background, or information.

17. I understand that I will be given an opportunity to review Juul's report(s) on validity issues and that I may be called on to testify in this matter. Therefore, I reserve the right to consider and/or rely upon any additional information or materials that may be provided to me or that are relied upon by any of Juul's experts or witnesses, and to supplement this report accordingly.

II. Legal Standards

18. I am not a legal expert. My understanding of the legal standards relevant to my opinions in this declaration are based on my discussions with counsel from NJOY, my experience from other patent-related matters, the prosecution and litigation

of my own patents, and my understanding of the documents that I have reviewed. I have, to the best of my ability, applied these legal standards to the claims at issue here.

A. Person of Ordinary Skill in the Art

19. I understand that a person of ordinary skill in the art ("POSITA") is determined by looking at (1) the type of problems encountered in the art; (2) the prior art solutions to those problems; (3) the rapidity with which innovations are made; (4) the sophistication of the technology; and (5) the educational level of active workers in the field.

20. Given my consideration of the factors above, it is my opinion that a POSITA pertinent to the 881 patent would have at least a B.S. degree in Mechanical Engineering, Electrical Engineering, Industrial Design, Product Design, or similar field, with at least two years of industry experience in one of these fields, and such a POSITA would have been familiar with electrically powered vaporizing articles, their components or the underlying technologies.

21. I would have qualified as a person of ordinary skill in the art under this definition. My opinions in this report are made from the perspective of a person of ordinary skill in the art as of the priority dates of the 881 patent.

B. Claim Construction

22. I have been informed that claim construction is a matter of law and that claim terms are interpreted as one of ordinary skill in the art would understand them, at the time of the invention, in view of the patent and evidence related thereto.

23. In construing the claims, I understand that one must first look to what is called the "intrinsic evidence" of the patent. The intrinsic evidence includes the language of the claims, the patent specification, the prosecution history, and documents cited on the face of the patent and/or during its prosecution history. The prosecution history of a patent includes original prosecution as well as reexamination proceeding(s) after the grant of the patent.

24. Claim terms are generally given their ordinary and customary meaning, which is the meaning that the term would have to a person of ordinary skill in the art in question at the time of the invention. I understand that claims are generally construed to cover the embodiments disclosed in the patent specification. Nevertheless, I understand that limitations from the embodiments in the specification must not be read into the claims. I understand that it is improper to read limitations from an embodiment described in the specification into the claims absent a clear indication in the intrinsic record that the patentee intended the claims to be so limited.

NJOY Exhibit 2022.013
Juul v. NJOY
IPR2024-00161

25. I understand that after looking at intrinsic evidence, "extrinsic evidence" may be considered. Extrinsic evidence can include expert testimony, dictionaries, learned treatises, and other literature that provides an understanding of the background technology and prior art—provided that the extrinsic evidence does not contradict the intrinsic evidence of the patent.

C. Obviousness

26. I have been told that under 35 U.S.C. § 103, a patent claim may be obvious if the differences between the subject matter sought to be patented and the prior art are such that the subject matter as a whole would have been obvious at the time the invention was made to a person having ordinary skill in the art to which said subject matter pertains.

27. I have been told that a proper obviousness analysis requires the following: (a) determining the scope and content of the prior art; (b) ascertaining the differences between the prior art and the claims at issue; (c) resolving the level of ordinary skill in the pertinent art; and (d) considering evidence of secondary indicia of nonobviousness (if available).

28. I have been told that the relevant time for considering whether a claim would have been obvious to a person of ordinary skill in the art is the time of invention.

Counsel for NJOY instructed me to assume that the date of invention for the claims at issue is July 27, 2009.

29. I have been told that a reference may be modified or combined with other references or with the person of ordinary skill's own knowledge if the person would have found the modification or combination obvious. I have also been told that a person of ordinary skill in the art is presumed to know all the relevant prior art, and the obviousness analysis may take into account the inferences and creative steps that a person of ordinary skill in the art would employ.

30. I have been told that whether a prior art reference renders a patent claim obvious is determined from the perspective of a person of ordinary skill in the art. I have also been told that there is not a requirement that the prior art contain an express suggestion to combine known elements to achieve the claimed invention. Furthermore, I understand that a suggestion to combine known elements to achieve the claimed invention may come from the prior art as a whole or individually and may consider the inferences and creative steps a person of ordinary skill in the art would employ, as filtered through the knowledge of one skilled in the art. However, I understand that obviousness grounds cannot be sustained by mere conclusory statements and must

include some articulated reasoning with some rational underpinning to support the legal conclusion of obviousness.

31. I have been told that there is no rigid rule that a reference or combination of references must contain a "teaching, suggestion, or motivation" to combine the references. But I have also been told that the "teaching, suggestion, or motivation" test can be used in establishing a rational for combining elements of the prior art. I have also been told to be aware of distortions caused by hindsight bias, and that reading into the prior art teachings of the invention at issue is improper.

D. Secondary Considerations of Non-Obviousness

32. I understand from counsel that evidence of secondary considerations of non-obviousness must be considered when determining whether an invention was obvious at the time of the invention. I understand that the purpose of secondary considerations is to prevent hindsight bias when analyzing whether a claimed invention would have been obvious. For example, secondary considerations include (i) whether an invention was commercially successful, (ii) whether an invention was praised by others when introduced, and (iii) whether an invention has been copied by others. I also understand that there must be some nexus or connection between the claimed features of the invention and the secondary considerations of non-obviousness.

33. I understand from counsel that a nexus may be presumed in certain circumstances. Specifically, I understand from counsel that a patent owner is entitled to a rebuttable presumption of nexus between the evidence of objective indicia and a patent claim if the evidence is tied to a specific product and the product ***is*** the invention disclosed and claimed—that is, the product embodies the claimed features and is coextensive with them. Regarding co-extensiveness, I further understand from counsel that the existence of one or more unclaimed features, standing alone, does not mean that a nexus may not be presumed; if the unclaimed features amount to nothing more than additional insignificant features, presuming nexus may nevertheless be appropriate. I understand from counsel that an insignificant unclaimed feature may be a feature that is not critical to the product's function. I understand from counsel that where a patented invention is only a component of a product, the patent owner is not entitled to the presumption of nexus. I understand that whether a presumption of nexus is appropriate in a given case is a question of fact.

34. I understand that the relevance of secondary considerations to the question of whether an invention would have been obvious is well-recognized and arises from common sense. For example, evidence of commercial success of an invention supports that the invention was not obvious because there was a need for the

invention and the invention could result in profit. As another example, evidence of copying shows that others were not able to come up with the patented idea themselves and the invention was not obvious. Similarly, evidence of praise of the invention by others supports that an invention was not obvious because an obvious design would not typically be praised as being better or different than what came before. Moreover, evidence of copying further shows praise by others as copying is the sincerest form of flattery.

III. Overview of the 881 Patent

35. U.S. Patent No. 10,334,881 claims priority to provisional application No. 61/271,819 filed on July 27, 2009. For purposes of this IPR, I understand that there is no dispute that the challenged claims of the 881 Patent are entitled to a priority date of July 27, 2009. The 881 Patent lists Gregory D. Conley and Daniel C. Hillenbrandt as inventors. I understand that the 881 Patent was originally prosecuted by and assigned to Fuma International, LLC ("Fuma") and was later assigned to NJOY.

36. I also understand that the 881 Patent was involved in *Certain Vaporizer Devices, Cartridges Used Therewith, and Components Thereof*, Inv. No. 337-TA-1372 ("the related ITC Investigation"), where NJOY accused Juul of infringing the 881 Patent by importing into the United States the JUUL and JUUL2 Systems and their

components. I understand that the 881 Patent was also the subject of *Fuma Intl., LLC v. R.J. Reynolds Vapor Co.*, 1-19-cv-00660 (M.D.N.C.) ("the related M.D.N.C. Litigation"), where Fuma accused R.J Reynolds of infringing its patents by making, using, offer to sell, and selling certain e-cigarette devices including the Vuse Ciro device.

37. The 881 Patent discloses electronic vaporizer technology. More specifically, the 881 Patent is concerned with a vaporizer having a cartridge. As shown below, Figure 2 illustrates some features of the claimed cartridge, including a housing 202 having a first aperture 210 and second aperture 212, a heating element 222, a liquid storage medium 204, and an airflow passageway 214. I explain these features in more detail below.

NJOY Exhibit 2022.019
Juul v. NJOY
IPR2024-00161

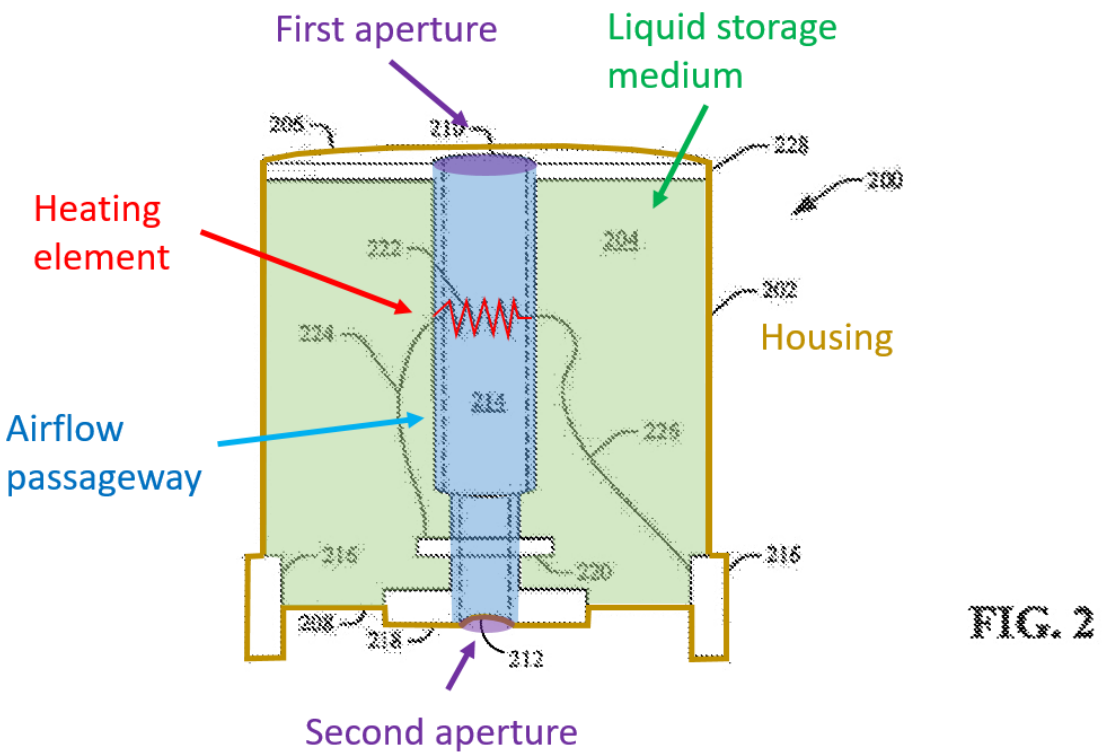

881 Patent, Fig. 2

38. Note that Figure 2 labels the aperture at the top of the cartridge (i.e., air outlet) as the first aperture and the aperture at the bottom (i.e., air inlet) as the second aperture. The challenged claims identify first and second apertures reversely. This difference is inconsequential to my analysis.

A. Housing

39. With respect to Figure 2, the 881 Patent states that the "cartridge 200 comprises a housing 202, which is constructed of a non-metallic material, such as a

polymer, wood, ceramic, and/or any combination thereof." [881 Patent, 5:65-6:1.] The housing of the cartridge is also illustrated in Figure 1 as "housing 120." [881 Patent, 3:44-45 ("The cartridge 104 comprises a housing 120 that has an interior.").]

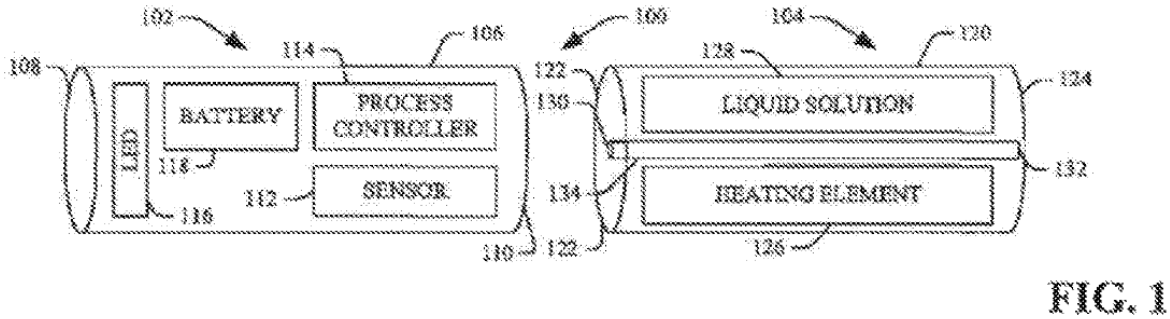

FIG. 1

881 Patent, Fig. 1

40. As explained in more detail in the claim construction section below, a POSITA would understand that the recited "housing" means "outside structure containing the device internals." [*See* Section IV.B.1, *infra*; *see also, e.g.,* 881 Patent, 3:44–45 ("The cartridge 104 comprises ***a housing 120 that has an interior.***"), 3:65–66 ("A heating element 126 ***resides in the interior of the housing 120***."), 4:7–8 ("A liquid, gelatin, frozen or solid solution (solution) 128 also ***resides in the interior of the housing 120*** . . . ."); 6:27–29 ("The cartridge 200 further comprises a conductive element 216, at least a portion of which ***resides in the interior of the housing 202***.").][1]

[1] All emphases added unless otherwise indicated.

Note that these teachings inform a POSITA that a housing has an interior; however, the components within the interior are not, themselves, part of the housing.

41. The challenged claims require that the housing has "a first end and a second end that is opposite the first end." [*See e.g.*, 881 Patent at Claim 1.] I understand that Juul argues that the claimed first end and second end are regions that comprises both housing structure and internal space/components. As mentioned above, and explained in more detail below in the claim construction section, I disagree. [*See* Section IV.B.2, *supra*.] A POSITA would understand that the recited "first end" and "second end" mean the extrema of the housing. For example, as shown below in an annotated form, Figure 2 identifies the first end 206 and second end 208 at the extrema of the housing.

NJOY Exhibit 2022.022
Juul v. NJOY
IPR2024-00161

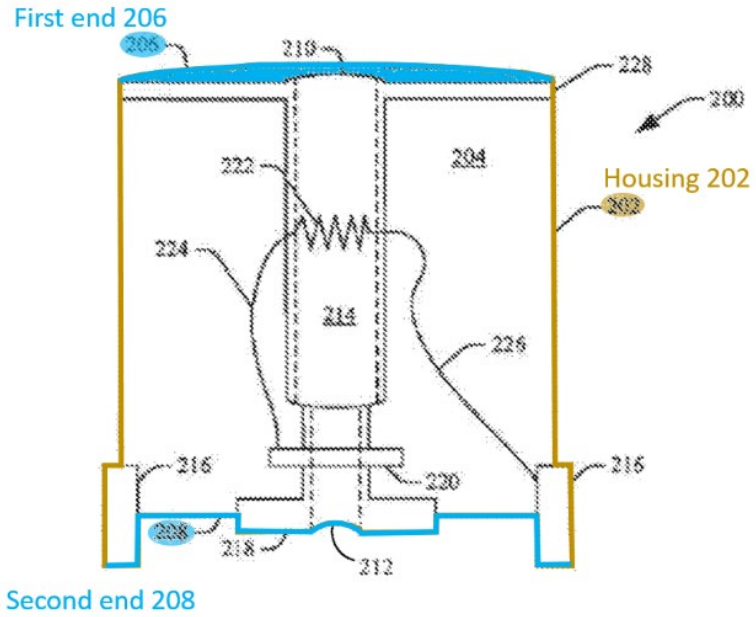

881 Patent at Fig. 2

42. The specification also teaches that "the housing 106 comprises a first end 108 and a second end 110 that is opposite the first end 108, and also includes an interior." [881 Patent, 3:26–28.] Therefore, a POSITA would have understood that the housing comprises a first end, a second end, and an interior, which are all separate and distinct from each other. That is, the first end does not include the interior.

B. First and Second Apertures

43. The challenged claims of the 881 Patent require the housing to have a first aperture and a second aperture on the first and the second ends of the housing, respectively. As I explain below, I disagree with the Board's preliminary construction

holding that the apertures may be positioned within the housing. [Section IV.C.1, *infra*.] I provide a brief summary of the specification's relevant teachings here.

44. The specification states that "the first end 206 comprises a first aperture 210, and the second end 208 comprises a second aperture 212." [881 Patent, 6:10-11.] "[T]he first aperture 210 and the second aperture 212 are positioned at approximately the centers of the first and second ends 206 and 208, respectively." [*Id.*, 6:14-16.] As explained above, a POSITA would have understood that the first end and the second end are at the extrema of the housing and they do not include the interior space associated with the housing. [Section III.A, *supra*.] Accordingly, a POSITA would have understood that the first and the second aperture are at the extrema of the housing, and not inside the housing.

45. Consistently, as shown below, Figure 2 illustrates the first aperture and the second aperture at the extrema of the housing. I have been unable to identify any disclosure in the 881 Patent that describes the first and/or second aperture ***within*** the housing.

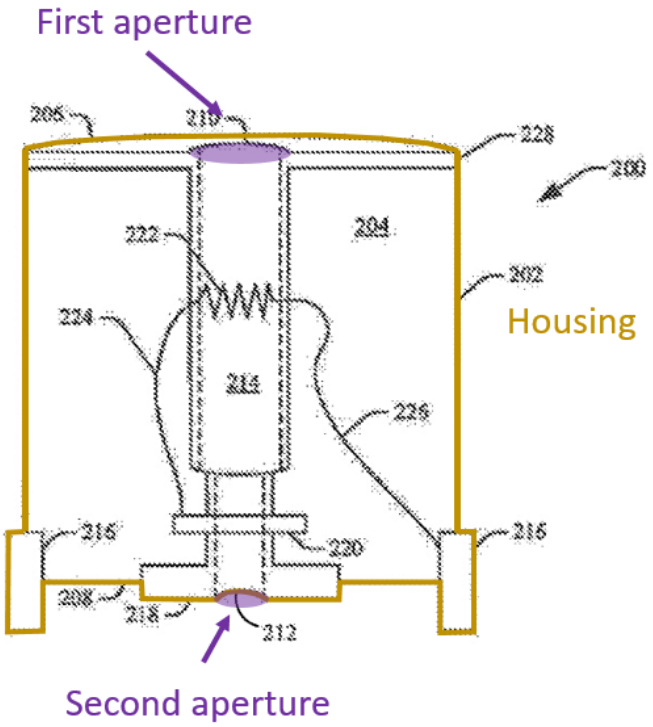

FIG. 2

881 Patent at Fig. 2

C. Heating Element and Liquid Storage

46. The 881 Patent describes various heating elements. For example, the heating element may be "resistive heating, laser-based heating, flame…ultrasonic technologies, ultraviolet technologies, chemical technologies, etc." [881 Patent, 3:65-4:3] The specification also describes heating elements having various shapes and positions relative to the airflow passageway. The heating element may "resid[e] solely in the airflow passageway" (6:64-65), "may reside on the interior and the exterior of the airflow passageway" (7:6-7), "be helical in nature and may wrap around the airflow

passageway" (7:9-10), or "the airflow passageway 214 itself may act as a heating element" (7:14-16).

47. As I will explain in further detail below in Section IV.A.2, the challenged claims of the 881 Patent do not cover all the heating elements described in the specification. All challenged independent claims require a heating element "extending transversely to a central longitudinal axis of the housing" and at least partially exposed to airflow. [881 Patent, Claims 1, 8, 16.] As shown below, this configuration is illustrated in Figure 2:

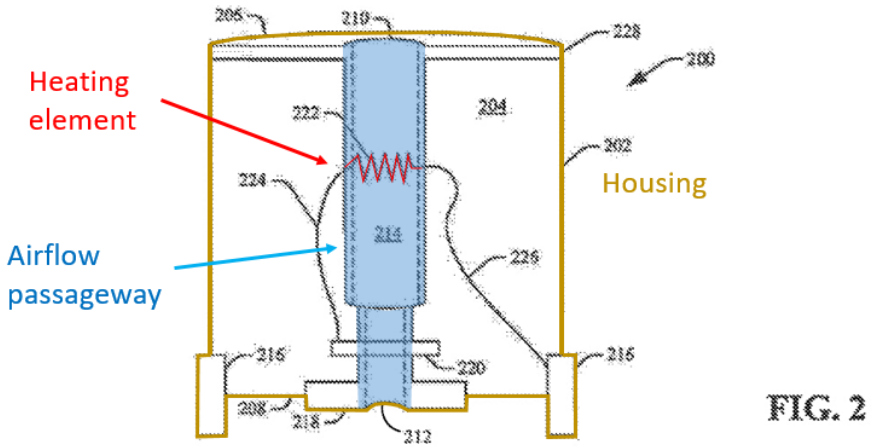

881 Patent, Fig. 2; *see also id.*, 6:41–56, 6:62–7:19.

48. In this embodiment, the heating element 222 resides in the airflow passageway 214 and lays crosswise to the housing's central longitudinal axis. [881

Patent at 6:62-63 ("… the heating element 222 is shown as residing solely in the airflow passageway 214 …."), 7:16-18 ("… it is readily recognized that airflow may pass directly over the heating element ….").] Because the heating element extends crosswise and substantially perpendicular to the longitudinal axis, the heating element is transverse to it. By contrast, the heating element 302 shown in Figure 3 below is a longitudinal, or axial, heating element that wraps around the central longitudinal airflow passageway.

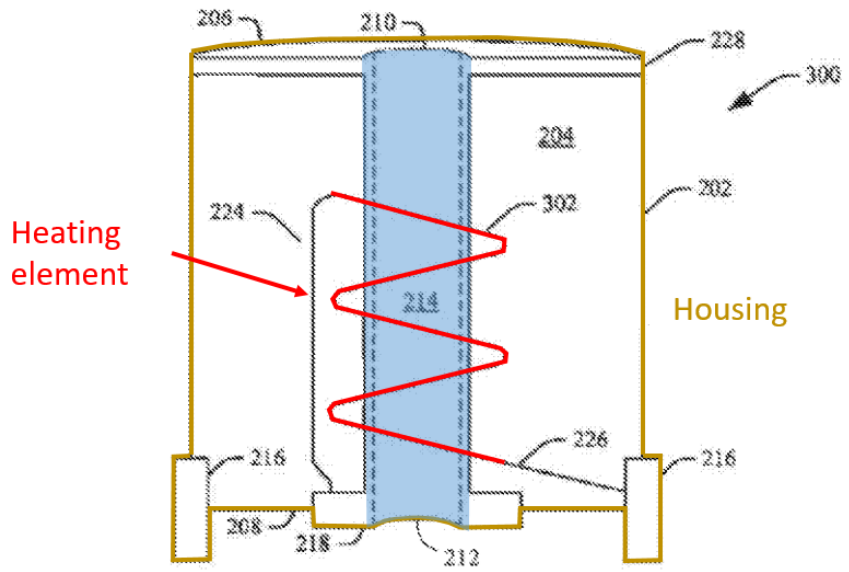

881 Patent at Fig. 3

49. The specification also notes that the heating element may "comprise wicking material that draws the liquid solution from the absorbent material 204 towards the heating element 222." [881 Patent, 6:45–47.]

50. The 881 Patent specification also states that "the solution can be suspended in an absorbent material, capsule, or reservoir, wherein such devices may act as the holding medium for the solution 128." [881 Patent, 4:6–9.] As shown below, Figure 2 depicts the solution holding medium as an absorbent material 204 that surrounds airflow passageway 214.

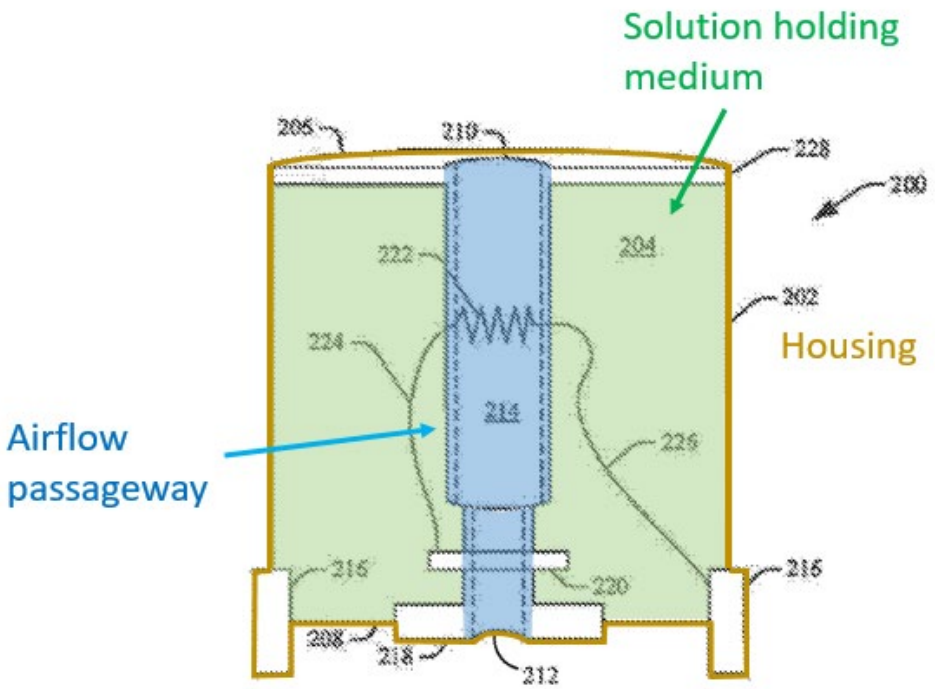

FIG. 2

881 Patent, Fig. 2.

IV. Claim Construction

51. There are a few terms that need to be properly understood to assess the validity of the challenged claims of 881 Patent. My opinions of the meaning of these terms, as well justifications for my opinions, are provided below.

A. Claim Terms Construed by the ALJ in the Related ITC Investigation

1. "transversely"

52. All challenged claims require a heating element "extend[ing] transversely across the airflow passageway." [*See e.g.*, 881 Patent, Claim 1.] It is my opinion that "transversely" should be given its plain and ordinary meaning, which is "crosswise."

53. I understand that Juul argues that "the '881 Patent specification does not use the words 'transversely' or 'transverse,' nor does it describe what it meant by 'extending transversely to a central longitudinal axis of the housing.'" [881 Petition, 57-58.] Juul also argues that the recited transverse heating element encompasses a heating element "resid[ing] on the exterior of the airflow passageway," "resid[ing] on the interior and the exterior of the airflow passageway" or be the airflow passageway itself. [*Id.*, 58.] It appears that Juul is arguing that any heating element residing on the

interior and/or exterior of the airflow passageway or wrapping around the airflow passageway would meet the claim. I disagree.

54. In the context of the 881 Patent, "transverse" has a clear meaning to a POSITA, which is "crosswise." [*See, e.g.*, EX2010.005 (defining "transverse" as "crossing from side to side"); EX2011.004 (defining "transverse" as "placed, lying, built etc. in a crosswise direction"). Thus, a heating element extending "transversely" to the airflow passageway plainly means a heating element oriented perpendicular or crosswise to the airflow passageway.

55. Indeed, a POSITA would have readily understood that Figure 2 of the 881 Patent depicts a heating element extending transversely, *i.e.*, crosswise, to the airflow passageway.

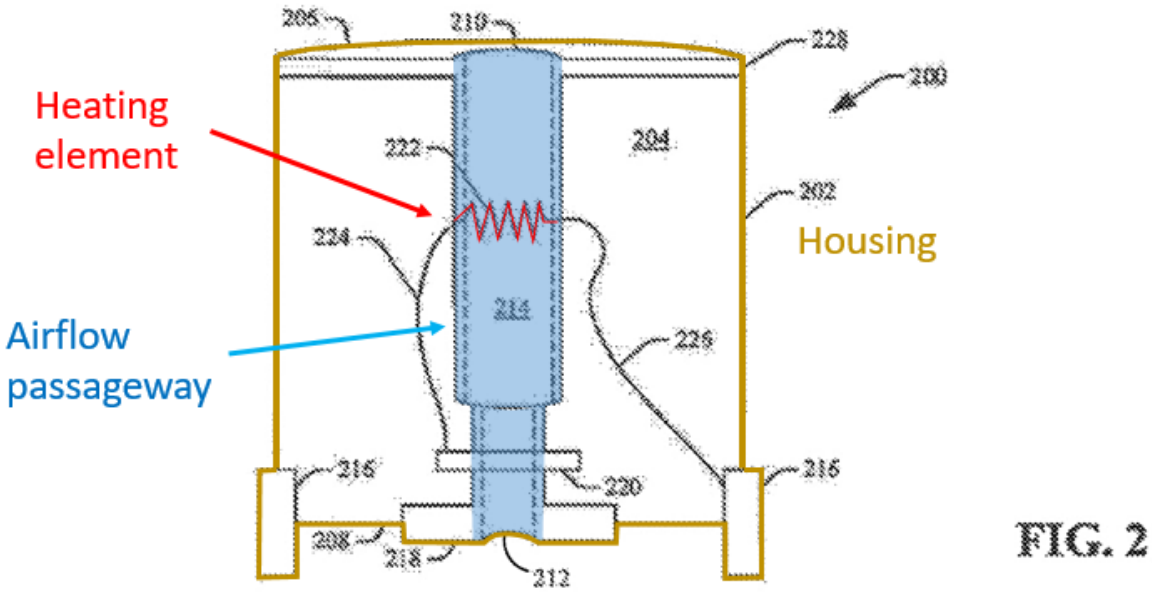

881 Patent, Fig. 2

56. In contrast, Figure 3 depicts a helical heating element that wraps around the walls of the airflow passageway. [881 Patent, 7:66-8:1 ("a heating element 302 may be helical in nature and may wrap around the exterior of the airflow chamber 214.").] As such, the walls of the airflow passageway in Figure 3 may become heated and act as the heating element.

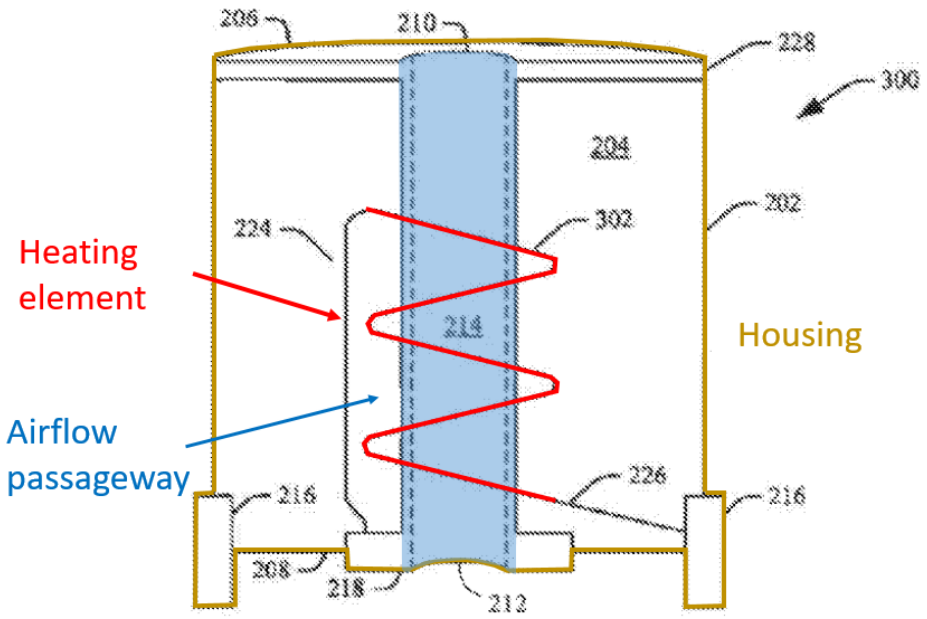

881 Patent at Fig. 3

57. A POSITA would have readily understood that the embodiment depicted in Figure 3 does not have a heating element extending transversely to the airflow passageway. Instead, Figure 3 depicts a heating element extending parallel to the longitudinal axis of the airflow passageway. In fact, claims 28-31 of the 881 Patent, which Juul does not challenge, recite a heating element "configured as a helical coil that wraps around the airflow passageway." [881 Patent at 21:11-14.] These claims do not recite a heating element extending transversely the airflow passageway. Accordingly, a POSITA would have understood that Figure 2 corresponds to the

transverse heating element claimed by the challenged claims of the 881 Patent; while Figure 3 corresponds to the helical heating element claimed by claims 28-31.

58. I also note that Juul and Dr. Sturges appear to argue that any heating element having a dimension perpendicular to the longitudinal axis of the airflow passageway would meet the challenged claims. [*See* Sturges Decl. ¶ 283-284 (arguing that Wang's heating element extends transversely to a central longitudinal axis of the housing).] I disagree. In fact, a POSITA viewing the figure Dr. Sturges presents in ¶ 283 of his Declaration, which is reproduced below, would immediately reject the idea that a small width perpendicular to the longitudinal axis would qualify as being transverse to the axis.

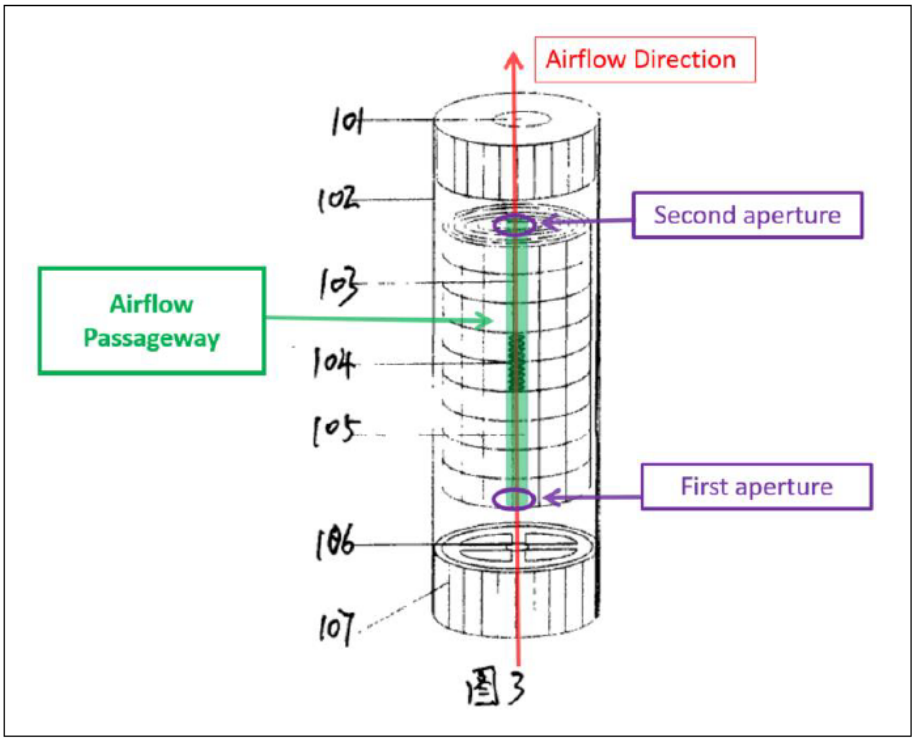

Ex. 1005, Fig. 3 (annotated).

Sturges Decl. ¶ 283

Juul and Dr. Sturges' interpretation renders the "transversely" limitation meaningless. A POSITA would have understood that all heating elements are 3D objects and would have a dimension perpendicular to the central longitudinal of the axis. Figure 2 clearly teaches that "transversely" requires a heating element having an overall major axis transverse airflow passageway.

B. Other Terms Requiring Claim Construction

1. "housing"

59. All challenged claims require a "housing." [*See e.g.*, 881 Patent, Claim 1.] It is my opinion that a "housing" means an "outside structure containing the device internals."

60. This construction is consistent with the claim language. Specifically, the challenged claims recite a housing having "an interior," that includes "a solution holding medium," "a heating element located in the interior of the housing," and "an airflow passageway in the housing." [*See* 881 Patent, Claims 1, 8, 16.]

61. The specification describes that the "housing" may be a cylinder that optionally has one or two end-caps. [881 Patent, 3:53-62 ("Moreover, the housing 120 may comprise only a cartridge wall (that can be cylindrical as well as other shapes). In another example, the housing 120 may comprise the cylindrical wall and two end-caps, all constructed of the polymer material or the ceramic material. In still yet another embodiment, the housing 120 may comprise the cartridge wall and a single end-cap. One or more end-caps described herein may be constructed from conductive material, such as metal, a conductive polymer, or the like.")] This disclosure confirms that "housing" denotes a structure.

62. Consistent with the proposed construction, the specification of the 881 Patent also explains that the "housing" is a structure having an interior for housing

components of the cartridge. [*See, e.g.*, 881 Patent, 3:44–45 ("The cartridge 104 comprises ***a housing 120 that has an interior.***"); 3:63–64 ("A heating element 126 ***resides in the interior of the housing 120***."); 4:5–6 ("A liquid, gelatin, frozen or solid solution (solution) 128 also ***resides in the interior of the housing 120*** . . . ."); 6:25–27 ("The cartridge 200 further comprises a conductive element 216, at least a portion of which ***resides in the interior of the housing 202***.")] Note that the housing having an interior does not mean that the interior of the housing or objects within the interior of the housing are part of the housing. [*See* Section IV.C.1, *supra*.]

63. Note that a POSITA would have understood that the "housing" of the cartridge is not necessarily coextensive with the cartridge. The specification teaches that the "cartridge 104 comprises a housing 120" and that the "cartridge 104 also comprises a first end 122 and a second end 124, which may be considered as a portion of the housing 120 ***or apart from the housing 120***." [881 Patent, 3:44–47.] The specification also teaches that the cartridge may comprise additional components beyond the housing, such as a mouthpiece affixed to an end of the housing. [881 Patent, 5:37–39 ("a wood tip may be positioned upon the second end 124, wherein the wood tip is configured to be received orally by the user.").] Accordingly, the 881

NJOY Exhibit 2022.036
Juul v. NJOY
IPR2024-00161

Patent teaches that the ends of the cartridge may or may not be coextensive with the ends of the housing.

2. "end"

64. The challenged claims recite a housing having "a first end and a second end that is opposite the first end." [*See e.g.*, 881 Patent, Claim 1.] It is my opinion that a POSITA would understand "end" to have its plain and ordinary meaning, which is "of the extrema of an object."

65. This proposed construction is consistent with the claim language, which recites a housing having "a first end and a second end that is opposite the first end." The specification also supports this proposed construction. The specification teaches that Fig. 2 depicts a cartridge having a first end 206 and a second end 208. [881 Patent, 6:3-4.] As shown below, the first end 206 and second end 208 are depicted as the two opposing extrema of the housing along the central longitudinal axis of the housing.

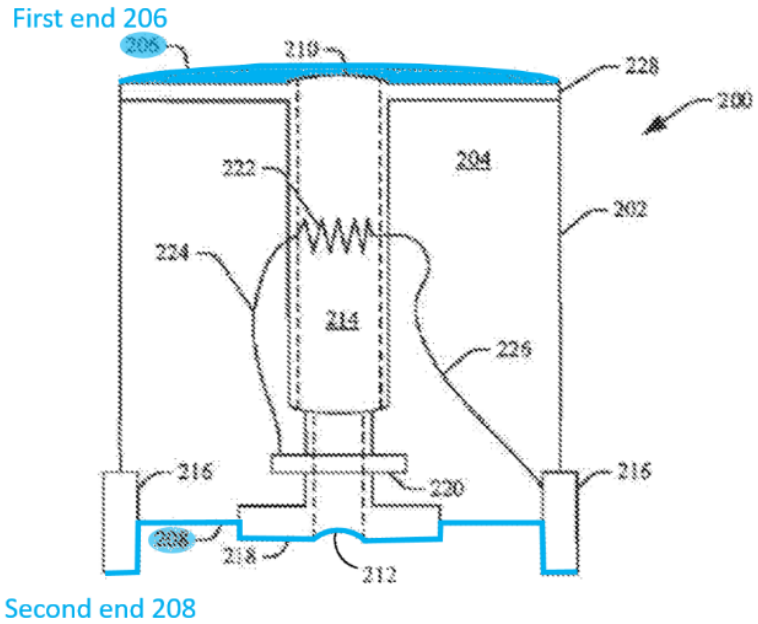

881 Patent, Fig. 2

66. Note that an end of the housing may or may not be planar. For example, Figure 2 depicts the second end 208 as non-planar, as annotated in blue below.

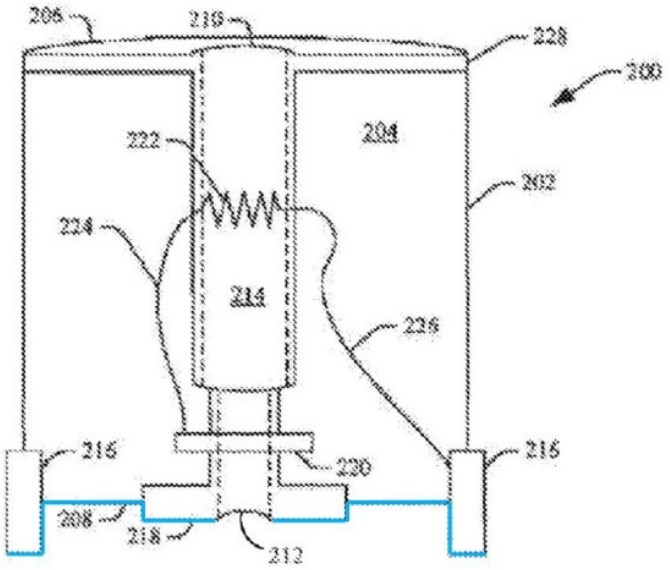

881 Patent, Fig. 2 (first end labeled in blue)

67. I note that the specification refers to the first end 206 and the second end 208 as the first and second ends of the *cartridge*, instead of the *housing*. This does not affect my analysis. A POSITA would understand that Figure 2 depicts an embodiment of the invention where the housing is coextensive with the exterior of the cartridge. For example, Figure 2 does not depict an embodiment having a mouthpiece, which would prevent the housing from being co-extensive with the exterior of the cartridge. [*See* Section IV.B.1, *supra* (explaining that the housing may or may not be co-extensive with the exterior of the cartridge).]

68. The proposed construction is also consistent with known dictionary meanings of "end." [*See, e.g.*, EX2019.0003 (defining "end" as "the extreme or last

part lengthwise"); EX2020.0004 (defining "end" as the "outside or extreme edge or physical limit"); EX2021.0003 (defining "end" as "the most remote place or point").]

69. I understand that Dr. Sturges interprets "end" differently. Specifically, he interprets the first end and the second end of the housing to include large and vague areas centered somewhere near the extremities of the cartridge, as shown below. Some of these "ends" include numerous different components that a POSITA would not recognize as being part of the housing.

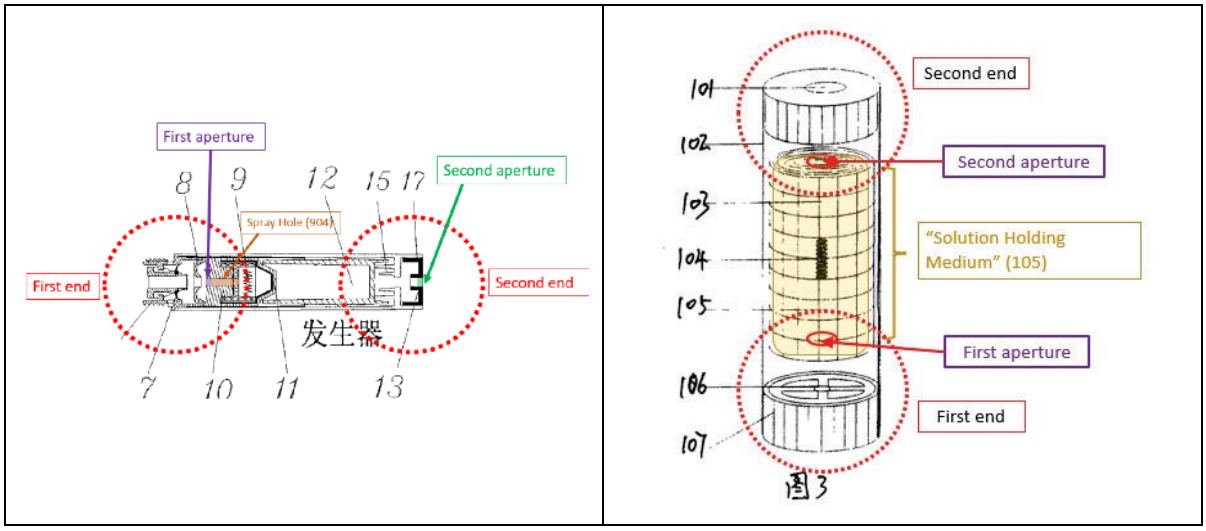

Sturges 881 Decl. ¶ 86. **Sturges 881 Decl. ¶ 260.**

70. I disagree with Dr. Sturges' interpretation, that "end" includes space interior to the housing. The specification teaches that "the housing 106 comprises a first end 108 and a second end 110 that is opposite the first end 108, and also includes

an interior."[2] [881 Patent, 3:26–28.] Thus, a POSITA would have understood that the housing comprises a first end and a second end, and also has an interior, which are all separate and distinct from each other. A POSITA would understand that the first and second ends of the housing do not include the interior of the housing, as Juul contends.

71. Moreover, the specification teaches that the first aperture "is located at approximately the center of the first end 122" and that the second aperture "is located at approximately the center of the second end 124." [881 Patent at 4:28-32.] If the first and second ends are the large spherical regions as Juul contends, then the first and second apertures, accordingly to the specification's teaching, would be located in the interior of the cartridge (i.e., center of the sphere). This is clearly inconsistent with the specification, particularly Fig. 2, which consistently describes the first and second apertures at the exterior of the cartridge housing.

3. "airflow passageway" extending "centrally and axially" with respect to the housing

72. Claims 1, 8, and 16 require an "airflow passageway "[that extends/extending/having a length extending] centrally and axially with respect to the

[2] Note that a POSITA would not read "housing…includes an interior" to mean that the interior of the housing is a part of the housing itself. Rather, a POSITA would understand it to mean that the housing surrounds a volume of space. [*See* Section IV.C.1, *infra*.]

housing intermediate of the first aperture on the first end of the housing and the second aperture on the second end of the housing." I understand that in the related ITC Investigation, the parties agreed that this term means "[t]he airflow passageway extends in a straight path through the center of the housing from a first opening on the first end to a second opening on the opposite end of the housing."

73. It is my opinion that the parties' agree-upon construction should be clarified to encompass obstacles within the airflow passageway that do not alter the direction of the airflow any more than the heating element. However, the construction should exclude structures that define the boundary of the airflow passageway because they are not obstacles to airflow in the passageway, they are the passageway.

74. The specification and challenged claims envision objects within the airflow passageway, such as the heating element. [*See e.g.*, 881 Patent, Fig. 2, Claim 1.] It is clear that having a heating element extending through the central axis of the housing does not prevent the airflow passageway from being central and axial. However, the specification does not envision structures that significantly alter the airflow path and guide the airflow. In such a situation, a POSITA would understand that such structures are part of the passageway because they define the boundary of the airflow passageway instead of being simply an obstacle within the passageway.

NJOY Exhibit 2022.042
Juul v. NJOY
IPR2024-00161

75. My proposed construction is consistent with the prosecution history. During prosecution of the related U.S. Patent No. 11,497,864 (which is the subject of IPR2024-00160), the Examiner initially rejected the pending claims as being anticipated by U.S. Pat. Publication No. 2009/0095311A1 ("Han"). [EX2029.277 (864 Patent File History).] Han discloses an e-cigarette having a shell portion (a) and a cigarette bottle assembly (b). [EX2001 (Han), [0063].] The shell portion comprises, *inter alia*, an atomizer assembly and a battery assembly located in a shell. [*Id.*, [0008].] As shown below, the cigarette bottle assembly includes a hollow shell and a perforated component (9) for liquid storage inside the shell. [*Id.*, [0070].]

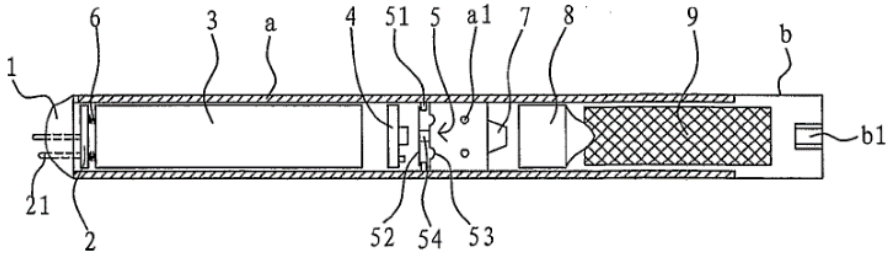

图1

EX2006, Fig. 1[3]; *see also* EX2001, Fig. 1

[3] I understand that Han is the U.S. National Phase application of WO 2007/131449 A1 (EX2006, "Han WIPO"). Han and Han WIPO have identical figures. [*Compare* EX2006.018-.025 *with* EX2001.002-.009.] I use figures from Han WIPO because they are of higher resolution.

76. As shown below, the atomizer comprises a porous material 81 and a heating rod 82 inserted into a negative pressure cavity 83 formed by the porous material. [EX2001, [0066].] "One end of the said porous component (81) fits with the said cigarette bottle assembly," effectively acting as a wick to absorb the liquid stored in the cigarette bottle assembly. [*Id.*]

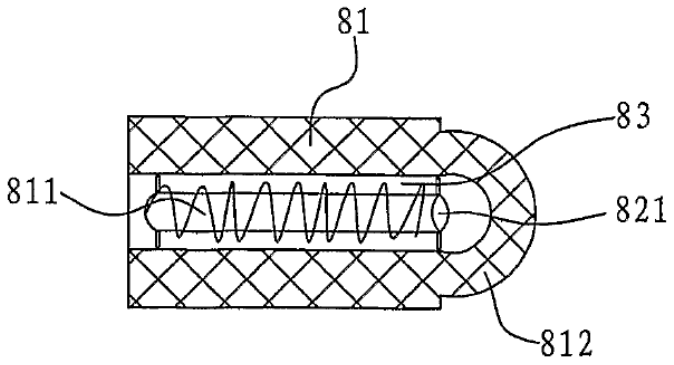

图7

EX2006, Fig. 7; *see also* EX2001, Fig. 7

77. As shown below, the liquid bottle assembly comprises a shell (b) and a perforated component for liquid storage (9) inside the shell. [EX2001, [0070].] The outer surface of the shell (b) has ventilating grooves (b2) which lead to an air channel (b1) where the user inhales aerosol. [*Id.*]

NJOY Exhibit 2022.044
Juul v. NJOY
IPR2024-00161

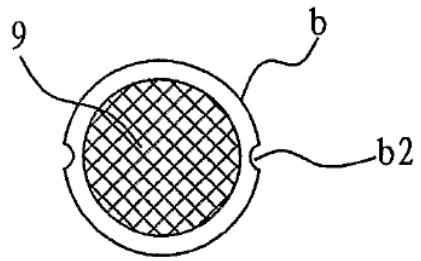

图3

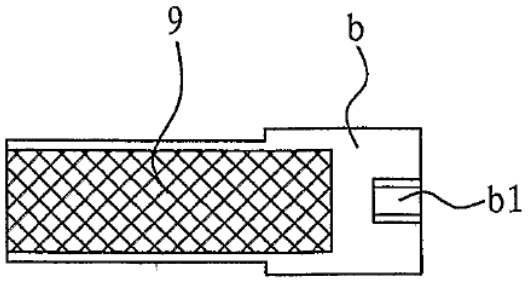

图4

EX2006, Figs. 3-4; *see also* EX2001, Figs. 3-4

78. To use the device, a user inserts the cigarette bottle into the open end of the shell portion such that the atomizer (8) contacts the liquid storage (9) to vaporize the stored liquid. This insertion is indicated on the figure below with the dashed line. [*Id.*, [0069] ("The user just needs to plug the cigarette bottle assembly into the open end of the shell (a), for easy use and very easy change"); [0071] ("one end of the porous component (81) lies against one end surface of the said perforated component for liquid storage (9), and contacts the perforated component for liquid storage (9).").]

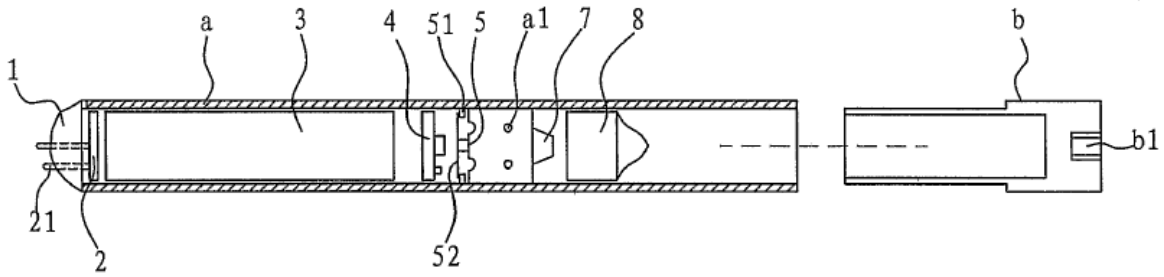

图2

EX2006, Fig. 2; *see also* EX2001, Fig. 2

79. Next, I explain the device operation and airflow path in Han. When a user inhales, air enters the device from air-inlets a1 and flows into a negative pressure cavity within the atomizer 8. [EX2001, [0071].] Next, the negative pressure causes liquid stored in the porous component of the atomizer to be sprayed into the negative pressure cavity and come into contact with the heating rod. [*Id.*] The heating rod then heats and vaporizes the e-liquid. [*Id.*] The negative pressure cavity is designed such that large, unvaporized liquid drops are re-absorbed by the porous component "under the action of vortex" and only small-diameter droplets are carried by the airflow and leave the atomizer. [*Id.*] Air then flows through the ventilating grooves (b2) to reach the air channel (i.e., air outlet) (b1). [*Id.*, [0070], [0071].] Before exiting the device, large droplets fall into the clearance between the cigarette bottle shell (b) and the air

channel (b1) and are reabsorbed by the perforated liquid storage component. [*Id.*, [0071].] I depict the airflow path in Han's device below.

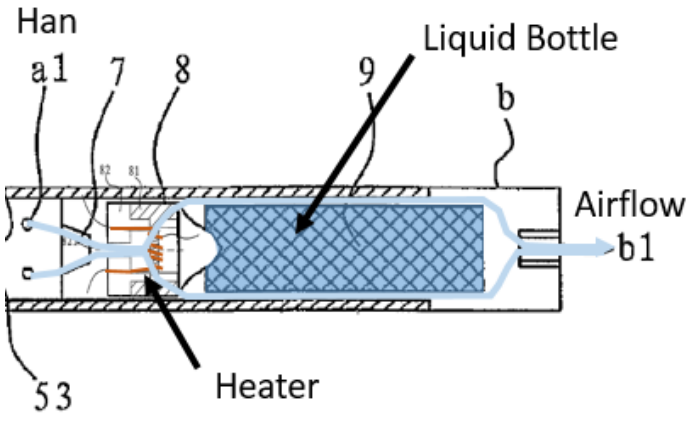

EX2006, Fig. 1; *see also* EX2001, Fig. 1

80. During prosecution of the 864 Patent, the Applicant argued that "Han's shell (b) does not include a central airflow passageway and instead places the perforated component for liquid storage (9) in the middle of shell (b), thereby forcing the airflow around the peripheral surface of perforated component for liquid storage (9) as described in paragraph [0070] of Han and shown in FIG. 3." [EX2029.273–274.] The Examiner agreed and allowed the claims. [EX2029.195 ("Applicant's arguments with respect to Han as previously applied under 35 U.S.C. 102, have been fully considered and are persuasive.").]

81. Accordingly, the prosecution history of the 864 Patent supports an interpretation of the terms to exclude large structures (such as the liquid bottle in Han), as airflow passageway obstacles. They are actually structures that define the airflow passageway.

82. This interpretation is also consistent with the court's holding in the M.D.N.C. litigation, which held that the airflow passageway of VUSE Ciro was central and axial despite the existence of small obstacles within the airflow passageway. The court reasoned that an obstacle does not alter the shape of the airflow passageway if it "do[es] not alter the direction of the [] airflow passageway any more than the heating element." [EX1015.016.] Accordingly, the court drew a distinction between small obstacles that do not alter the shape of the airflow passageway and large structures that define the boundary of the airflow passageway.

83. In conclusion, it is my opinion that the Board's preliminary construction should be further clarified such that the term "wherein the airflow passageway extends centrally and axially from the first aperture to the second aperture" should encompass small obstacles within the airflow passageway but exclude large structures that define and alter the boundary of the airflow passageway. This proposed construction is

consistent with the claim language, specification, prosecution history, and the holding from the M.D.N.C litigation.

C. Claim Term the Board Preliminarily Construed

84. I understand that in the institution decision, the Board provided a preliminary construction for the following term:

Term	Preliminary Construction
"the housing having a first aperture on the first end"	"encompass[es] apertures that are located within the first end of the housing" and "does not require that the first aperture be located in the housing itself"

85. As explained below, I respectfully disagree with the Board's preliminary construction of these terms.

1. "housing having a first aperture on the first end [of the housing]"

86. It is my opinion that the term "the housing having a first aperture proximate the first end" should be accorded its plain and ordinary meaning, which is "a hole in the housing structure at a location on the first end of the housing."

87. The term "*the housing having a first aperture on the first end [of the housing]"* has two important aspects to its meaning. The first issue is what is meant

by a housing having an aperture. The second issue is where any such aperture may be located, relative to the housing.

88. I note that in the institution decision, the board proposed a preliminary construction of this phrase wherein the first aperture could be located *within* the housing. This preliminary construction was more fully expressed as:

> …we construe the term "the housing includes/having a first aperture on the first end" of the housing to encompass apertures that are located within the first end of the housing. The term does not require that the first aperture be located in the housing itself. Our construction is preliminary and the parties are invited to address claim construction of this term during trial. [881 Institution Decision at 16.]

89. As explained above, a POSITA would understand that a housing, in the context of the 881 Patent, is "outside structure containing the device internals.". [Section IV.B.1, *supra*.]

90. The Board reached its preliminary construction by considering the limitation "a housing *having* an interior and *a solution holding medium adapted to hold a solution*." [881 Institution Decision at 14.] The Board reasoned that because it is undisputed that "a housing having…a solution holding medium" encompasses a

solution holding medium located within the housing, "a housing having a first aperture" must encompasses a first aperture located within the housing. [*Id.*] Central to the Board's preliminary construction is an assumption that the phrase "housing having a" has the same meaning when used with "a first aperture" and "a solution holding medium." [*Id.*] I respectfully disagree with the Board's reasoning because this construction fails to consider the context of the claim and the nature of the object being "had" by the housing.

91. First, a POSITA would not understand the phrase "housing having a [object]" to necessarily mean that the object is positioned within the housing. The question of whether or not an object being "had" by a housing can be "within" the housing is not a simple yes-no answer. The answer changes depends on the nature of the object. Consider, for example, that a housing can (and always does) *have* an exterior surface finish. An exterior surface finish, by its very nature cannot be inside a housing. However, the reasoning used for the Board's preliminary construction would seemingly allow a housing to have an exterior surface finish on its interior – a clear logical contradiction.

92. Furthermore, a POSITA would understand that a "housing having" an object does not require the object to be part of, or *in* the housing. For example, a

housing having an interior space does not mean that the open space is a part of the housing. Rather, a POSITA would understand it to mean that the housing surrounds an empty space. The Board seems to appreciate this difference. [*See* 864 Institution Decision at 19-20 ("This, however, does not resolve whether or not a "housing having an aperture" proximate the first end of the housing means that the aperture may be located within the inside of the housing (as asserted by Petitioner) or must be in the housing itself, i.e., a part of the housing itself (as asserted by the Patent Owner).").]

93. Next, one must consider the nature of the "aperture" to determine what "housing having a first aperture" means. The purpose of the claimed apertures is to allow air to flow into, and out of, the cartridge housing. This purpose is clearly reflected in the claim language in Claim 1 that reads "the airflow passageway is configured to allow an airflow through the cartridge from the first aperture to the second aperture of the housing."

94. The specification consistently describes the first and second apertures as being part of the first and second ends of the housing, which informs a POSITA that the apertures are at the exterior of the housing. [881 Patent at 4:28-35 ("The first end 122 of the cartridge 104 comprises a first aperture 130 that is located at approximately the center of the first end 122 of the cartridge 104. The second end 124 comprises a

second aperture 132 that is located at approximately the center of the second end 124 of the cartridge 104. An airflow passageway 134 extends between the first aperture 130 and the second aperture 132 axially proximate to the center of the housing 120.”).] Likewise, Figures 1-3 universally depict the first and second apertures as openings providing access to the interior of the housing. Moreover, the specification teaches that the first and second apertures are “located at approximately the center of” the first and the second ends. [881 Patent at 4:28-32.] This teaches a POSITA that the first and second apertures are on the first and second ends, which as explained above are walls at the extrema of the housing. [Section IV.B.2, *supra*].

95. In fact, when the specification uses the term “aperture” in other contexts, it describes the aperture as a hole *in* the wall of another structure. For example, the specification describes that the walls of the airflow passageway may have apertures therein.

> This gap is optional, as other designs may call **for the walls of the airflow passageway 214 to be permeable or have apertures therein**, to allow for vaporized solution to mix with air in the airflow passageway 214. [881 Patent at 7:61–65.]

> In such a design, **the wall of the airflow passageway 214 may have apertures**, be permeable, or be conductive to heat such that the vaporized liquid solution may be provided to the user. [Id., 7:9–12.]

It would be clear to a POSITA that when the specification say the airflow passageway may ***have*** apertures, it is discussing an aperture *in* the airflow passageway, not in an object within the airflow passageway. This usage is consistent with my proposed construction.

96. While the above limitation and specification would make it very clear to a POSITA that the claimed apertures need to allow air into and out of the cartridge housing, there is additional claim language that would further this understanding. For example, Claim 1 goes on to require "*an airflow passageway in the housing*." This airflow passage has the further requirement that "*the airflow passageway extends centrally and axially from the first aperture to the second aperture*."

97. What is important to note here is that the above use of "passageway" refers to the entire airflow passageway. When the inventors wanted to refer to a subset of the passageway in claim 1 they used the phrase "*a **portion** of the airflow passageway.*" If the unmodified use of "passageway" in the above limitation is construed such that it can be read as referring to only a ***portion*** of the airflow

passageway, then the use of "portion" in the claim language is rendered meaningless. It is my opinion that constructions that render other terms meaningless are, in all likelihood, incorrect interpretations of the claim language. Therefore, the entire airflow passageway in the housing must extend from the first aperture to the second aperture. This is only possible if the apertures are located on the outer portions of the housing. If the first aperture was somehow identified as being inside the housing, then only a portion of the airflow passage in the housing would extend from the first aperture to the second aperture. Basically, there would be a portion of the airflow passageway in the housing that had not yet reached the first aperture. As a result, only a ***portion*** of the airflow passageway would extend from the first aperture to the second aperture. Such a case of partial airflow paths is illustrated in the diagram below. Such an identified first aperture would not practice the claim language.

NJOY Exhibit 2022.055
Juul v. NJOY
IPR2024-00161

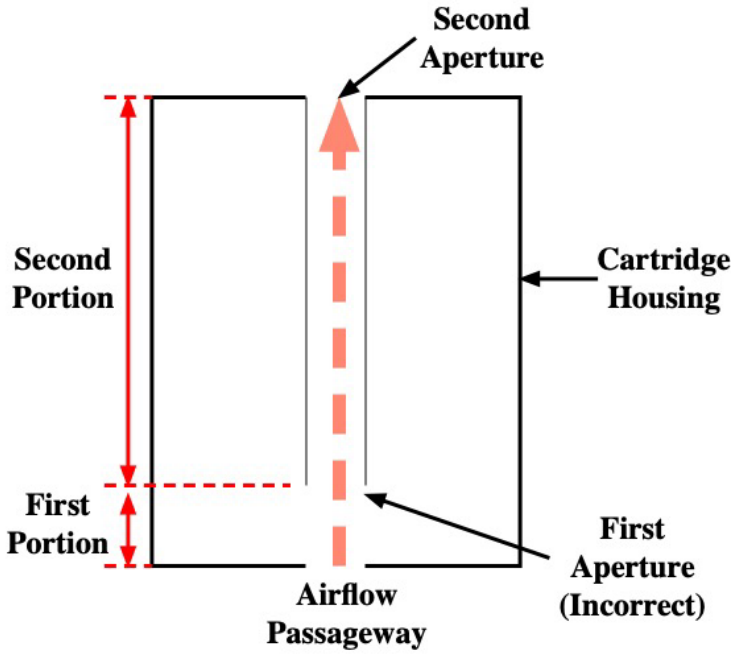

Illustration of Incorrect Internal "First Aperture"

98. Therefore, it is my opinion that the when considering the context of the claim, teachings of the specification, and the nature of an aperture, it would be clear to a POSITA that "a housing having a first aperture" means an aperture located in, or otherwise defined by, the external walls of the housing, just as an external surface finish must be on the exterior walls of the housing.

99. In conclusion, it is my opinion that a POSITA looking for a first aperture in the cartridge housing would look for an opening in the external walls and would not consider open spaces within the housing to be the claimed first aperture.

a. The proposed construction is consistent with NJOY and Fuma's contentions in related proceedings

100. In its institution decision, the Board considered Fuma and NJOY's statements made during the related M.D.N.C. Litigation and the related ITC investigation, and stated that "Patent Owner mapped the 'first aperture' claimed in the '881 patent to an aperture within a threaded connector, not the housing, in the Vuse Ciro device." [881 Institution Decision at 15.] The Board then found that "Petitioner has provided sufficient argument that Patent Owner's mapping of apertures that are arguably located within the interior of a housing, as opposed to located in the housing, supports a construction that does not require the 'first aperture' of the '881 patent to be located in the housing." [*Id.*]

101. I have considered Fuma's arguments in the M.D.N.C. Litigation regarding VUSE Ciro. I have also considered NJOY's arguments made in the related ITC investigation regarding VUSE Ciro. It is my opinion that Fuma and NJOY arguments in the related proceedings are consistent with Patent Owner's position in this IPR.

102. I understand that the VUSE Ciro cartridge comprises a plastic cylindrical shell which acts as the outer body of the cartridge assembly. [EX1014, 24.] As shown

below, the VUSE Ciro cartridge has a positive pin and a threaded connector that inserts into an opening at the bottom of the cylindrical shell.

Figure H-12: Vuse Ciro Cartridge Air Flow Path

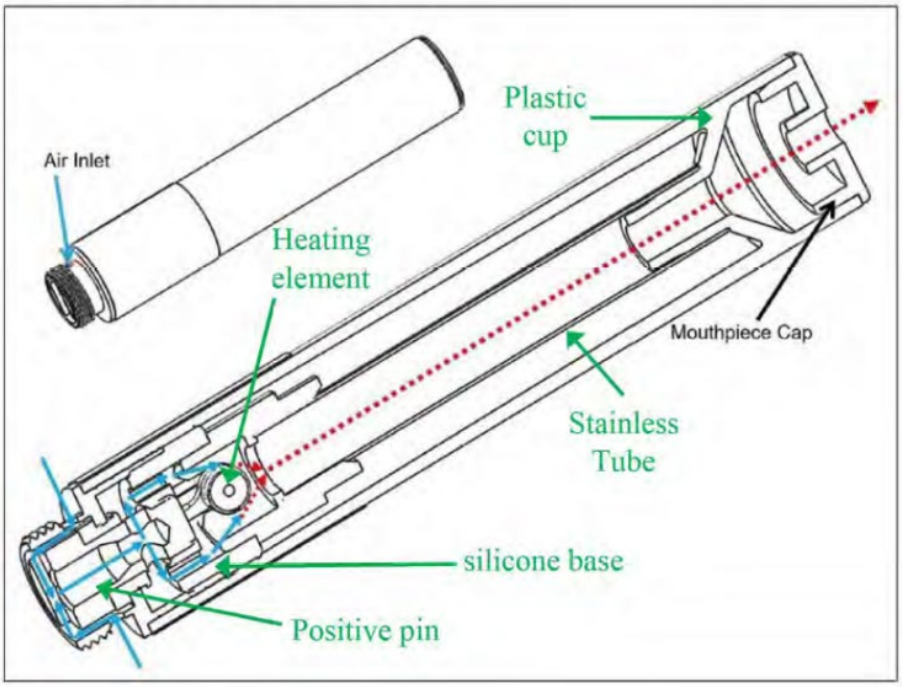

EX1014, 21

103. I understand that Fuma and NJOY identified the bottom surface of the positive pin and the threaded connector, as annotated below in purple, as the claimed first end of the housing, as shown below. This first end is not a planar surface—it comprises a circular bottom surface of the threaded connector and a partially recessed bottom surface of the positive pin.

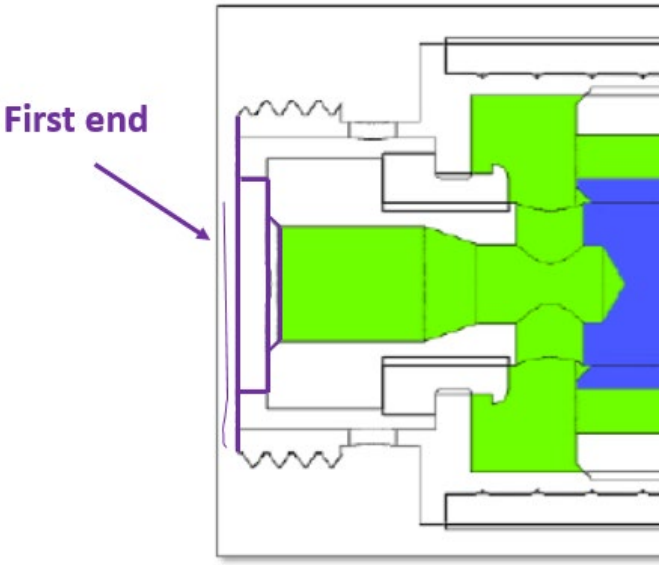

EX1021.0013

Photo of Vuse Ciro Cartridge with First End Highlighted in Purple

104. This identification is consistent with Patent Owner's position and my opinions in this IPR. As explained above, the 881 Patent teaches that the ends of the housing may or may not be planar. [Section IV.B.2, *supra*.] Moreover, the "housing" of VUSE Ciro is not limited to the cylindrical shell. The specification of the 881 Patent teaches that "the housing 120 may comprise the cylindrical wall and two end-caps…[or] a single end-cap." [881 Patent, 3:52-59.] Consistent with this teaching, the VUSE Ciro cartridge housing comprises a cylindrical shell and an end cap, which is

the positive pin and threaded connector.[4] This read is also consistent with the claims of the 881 patent which require the first end to be conductive and electrically couple to the power source. [*See e.g.*, 881 Patent, 17:34-37.]

105. I understand that in the prior proceedings, Fuma and NJOY presented two theories regarding what constitutes the claimed first aperture in VUSE Ciro. Under the first theory, Fuma and NJOY identified an aperture in the bottom surface of the positive pin, as shown below.

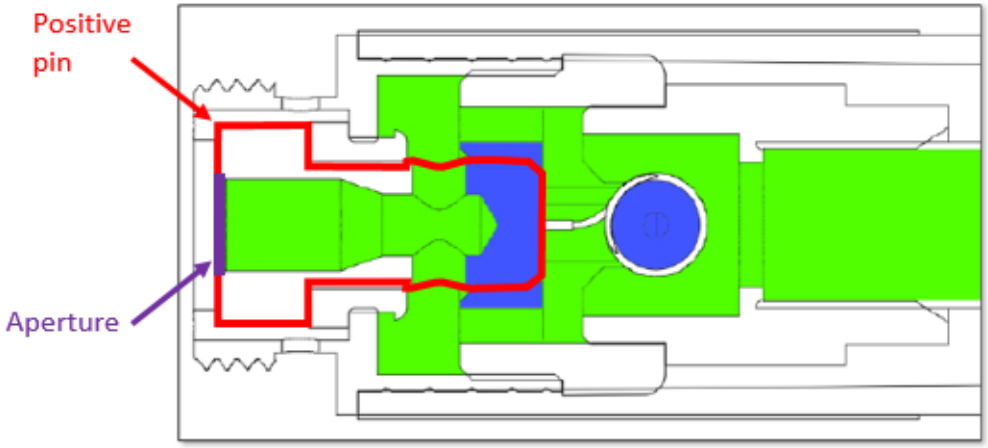

EX1021.0013

[4] The VUSE Ciro cartridge housing also comprises a second end cap (mouthpiece cap) at the air outlet end of the housing. [EX1014.023] This second end cap does not affect my analysis regarding the first aperture.

106. Under the second theory, Fuma and NJOY identified a larger aperture formed by the threaded connector opening as shown below as the first aperture.

Vuse Ciro 2D View

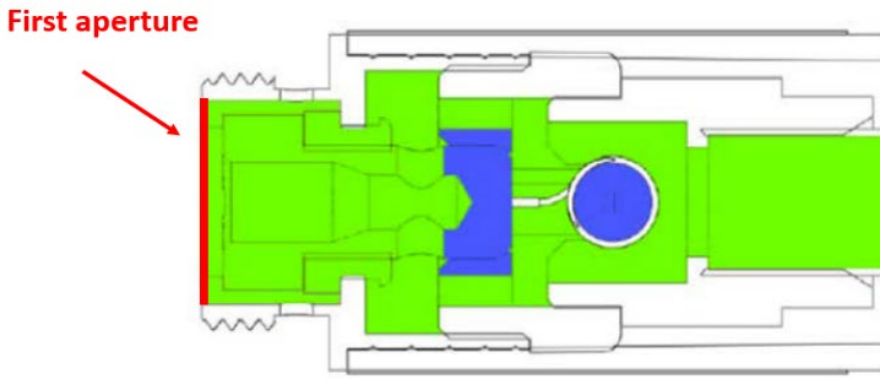

EX1021.0009

107. It is my opinion that, under either theory, the first aperture identified in the prior proceedings are *in* the housing, or defined by the exterior wall of the housing, as opposed to being *inside* the housing. In both situations, the identified first aperture is on the first end of the housing of the Vuse Ciro cartridge, which is external to the housing. Both apertures are also visible from the outside of the cartridge, confirming that they are not *within* the housing.

V. Overview of Alleged Prior Art References

A. Overview of Xia

108. Chinese Patent No. CN 201238610Y to Xia ("Xia") was published on May 20, 2009. I have reviewed Dr. Sturges' description of Xia. His summary leaves out very important aspects of the working process of Xia. Therefore, in this section I provide an overview of Xia and I identify the operating principles of Xia that make it incompatible with the modifications proposed by Dr. Sturges.

109. Xia discloses an electronic cigarette having three main components: a controller, an atomizing component, and a liquid storage component, as shown below in an annotated version of Xia Figure 2. [Xia at 1. Fig. 2.]

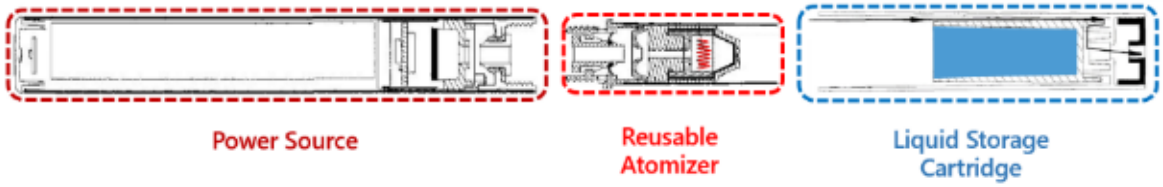

Xia at Fig. 1. Annotated.

110. The controller is the battery portion. As shown below, the controller includes a signal indicating lamp 1, a signal indicating lamp cover 14, a vent hole 16, a lithium battery 2, an integrated circuit board 3, an electret microphone 4, and a connecting conductor 6. [*Id.*, 7.]

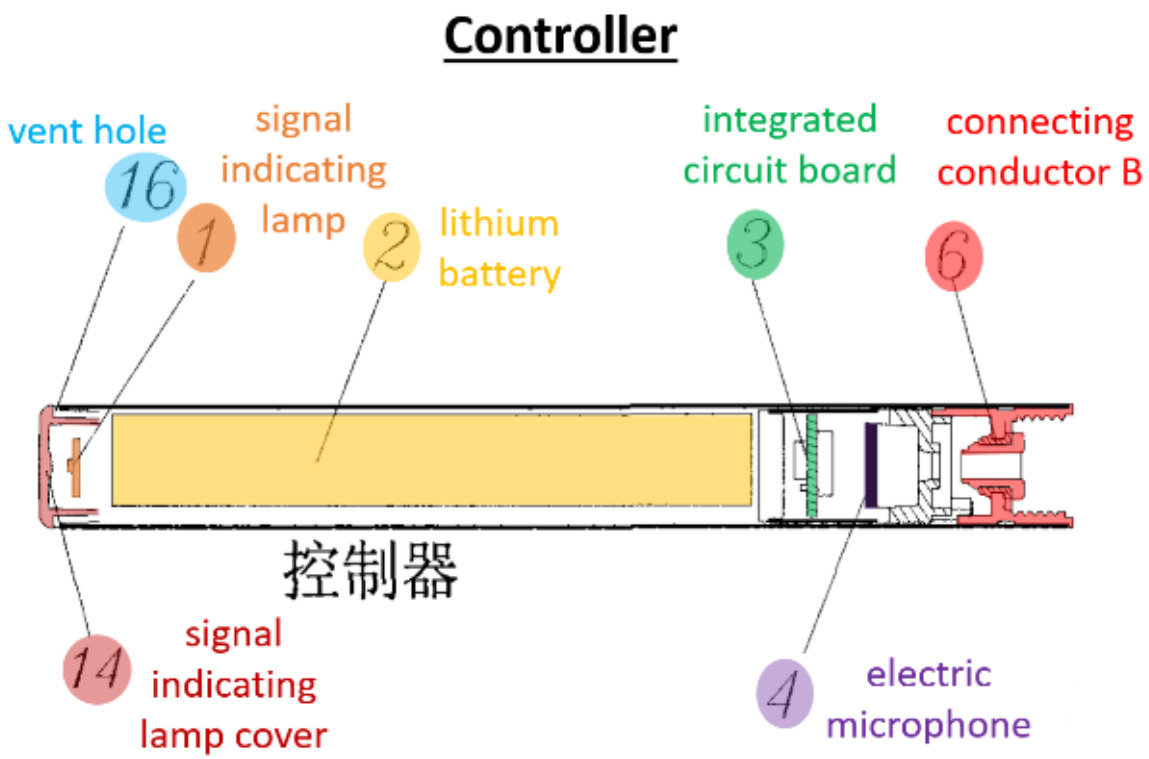

Xia at Fig. 1. Annotated.

111. The atomizer component includes the heating element and the liquid storage component, which includes the vaporizable liquid. Xia refers to the combination of these two components as the "generator." [Xia at 7, Fig. 2.] More specifically, the atomizer component comprise a threaded connector 5 which couples with a threaded connector 6 in the controller. As shown below, the atomizer component further comprises a heater 9, a vibrating diaphragm 7, a liquid-blocking

plate 8, a secondary liquid storage chamber 10, and a liquid guiding mechanism 11. [Xia at 9, Figs. 1, 3, 4.]

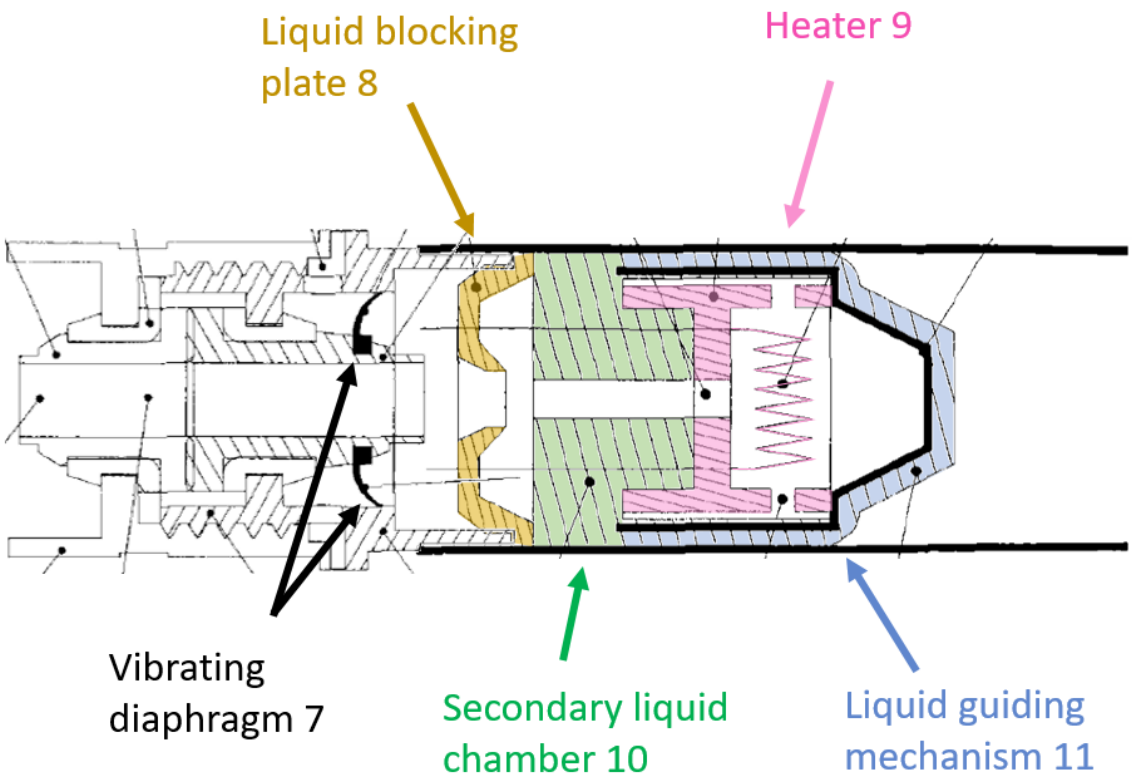

Xia at Fig. 3, 4 (combined, annotated)

112. As shown below, the liquid storage component includes a liquid storage chamber 12, a liquid blocking tank 15, a soft suction nozzle 13, and a liquid blocking sealing cover 17. [Xia at 9, Fig. 1.] The liquid storage chamber 12 comprises a cylindrical fiber material with vaporizable liquid stored within. [*Id.*, 13 ("The liquid

storage chamber 12 is a cylindrical object with one end open, medicinal cotton fibers are placed in the middle, and then the raw chemical liquid is charged in.).”]

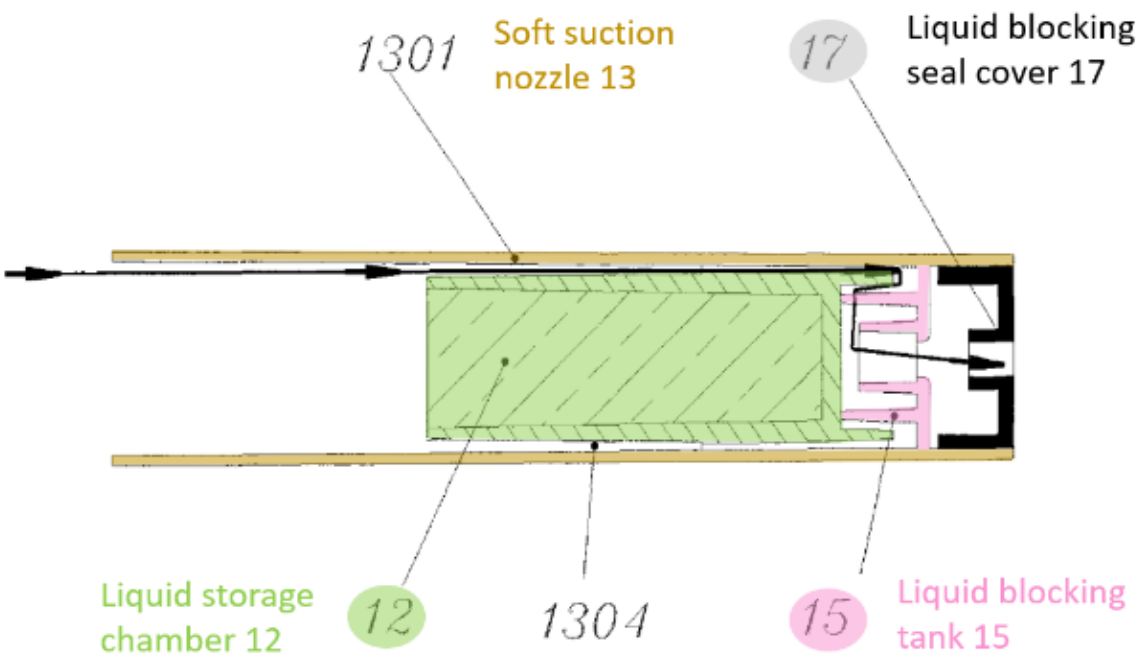

Xia at Fig. 5. Annotated.

113. In operation, the liquid storage component slides onto the atomizer component to form a “generator.” In doing so, chemical liquid flows from the liquid storage chamber 12 into the secondary liquid storage chamber 10 through the liquid-guiding mechanism 11. This fluid flow path is illustrated below with blue arrows. Note that this fluid-flow process moves the liquid from the right side of the heater 9 to the left side of the heater. [Xia at 10 (“chemical liquid flows from the liquid storage

chamber 12 into the secondary liquid storage chamber 10 through the liquid-guiding mechanism 11.”).]

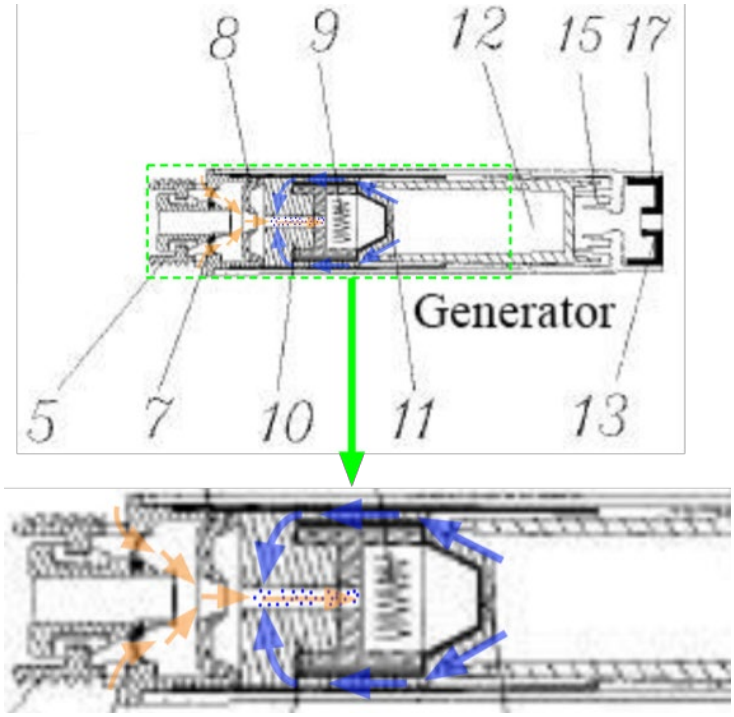

Xia Figure 2. Top: Cropped to Show Generator. Bottom: Zoomed to Show Fluid, Air Flow, and Droplets.

114. Also referring to the figure above, when a user inhales, “air enters the inside of the generator from the air inlets 702 on a side surface of the generator.” [Xia at 10.] The air then passes the vibrating diaphragm 7 and converges to pass through a channel formed in the secondary liquid storage chamber 10 and is directed to a heating element 9. [*Id.*]

115. Air moving through the channel pulls liquid out of the secondary liquid storage chamber 10 and into the airflow for vaporization by the heater 9. [Xia at 13 ("Its working process is as follows: under the action of airflow, small droplets are sucked into the other side of the heat insulation seat 902 through the spray hole 904 in the heat insulation seat 902. Under the action of the heating wire 901, the liquid is instantly atomized, then flows out of the heater 9 from the overflow holes 903.").] I show the process by which the liquid is heated in the annotated version of Figure 4 provided below.

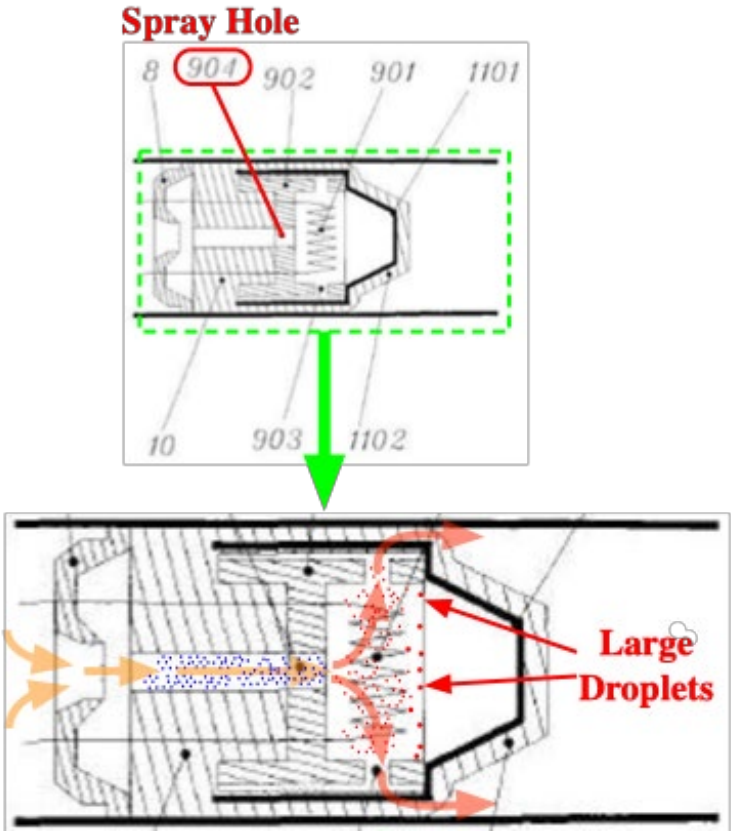

Xia Figure 4. Top: Annotated to Highlight Spray Hole. Bottom: Zoomed and Annotated to Show Air Flow and Droplets.

116. The airflow path during this process is shown by the orange and red arrows on the annotated version of Figure 4 above. The red arrows indicate the hot airflow that results from the heating. The hot droplets have also been shown in red. I note that my annotated version of Xia Figure 4 looks very much like that provided by Dr. Sturges, such as on page 104 of his report. Dr. Sturges correctly points out that using these structures results in a process wherein "the airflow through the passageway ***passes all around*** the heating element." [Sturges Report, ¶ 151. emph. add.] By passing air over all of the heating element, the heater is used efficiently to create vapor.

117. An important aspect of Xia's droplet-heating process is that only some of the droplets sent through spray hole 904 get vaporized and passed through the rest of the device and into the consumer's mouth. Xia explains that large droplets are produced and "large-diameter droplets after atomization are attached to a wall under the action of a vortex to be reabsorbed by the liquid-guiding mechanism." [Xia, page 11.] These larger droplets are illustrated above in the annotated version of Xia Figure 4. The larger droplets are shown as hitting the wall on the right side of the heating wire, but they would hit any of the other walls that stop them from passing through the device

NJOY Exhibit 2022.069
Juul v. NJOY
IPR2024-00161

and into the consumer's mouth. The details of this working principle of Xia are clearly described on page 11:

> …the chemical liquid is sprayed into the atomizing room in the form of droplets, the chemical liquid is instantly atomized by the action of the heater, large-diameter droplets after atomization are attached to a wall under the action of a vortex to be reabsorbed by the liquid-guiding mechanism through the overflow holes, and small-diameter droplets are suspended in the airflow to form water vapor, which is sucked out through a smoke channel... [Xia, page 11.]

118. Next, air containing small droplets exits the heating chamber through two overflow holes 903 and travels along a gap, which Xia refers to as the "airflow channel," between the soft suction nozzle and the liquid storage chamber 12 until it reaches the right end of the soft suction nozzle 13. [Xia at 13 ("Under the action of the heating wire 901, the liquid is instantly atomized, then flows out of the heater 9 from the overflow holes 903, then flows to the position of the soft suction nozzle 13 through gap between the soft suction nozzle and the liquid storage chamber 12 as the airflow channel, and is finally sucked out through the soft suction nozzle 13.").] The airflow path described by Xia is illustrated below on an annotated version of Figure 4.

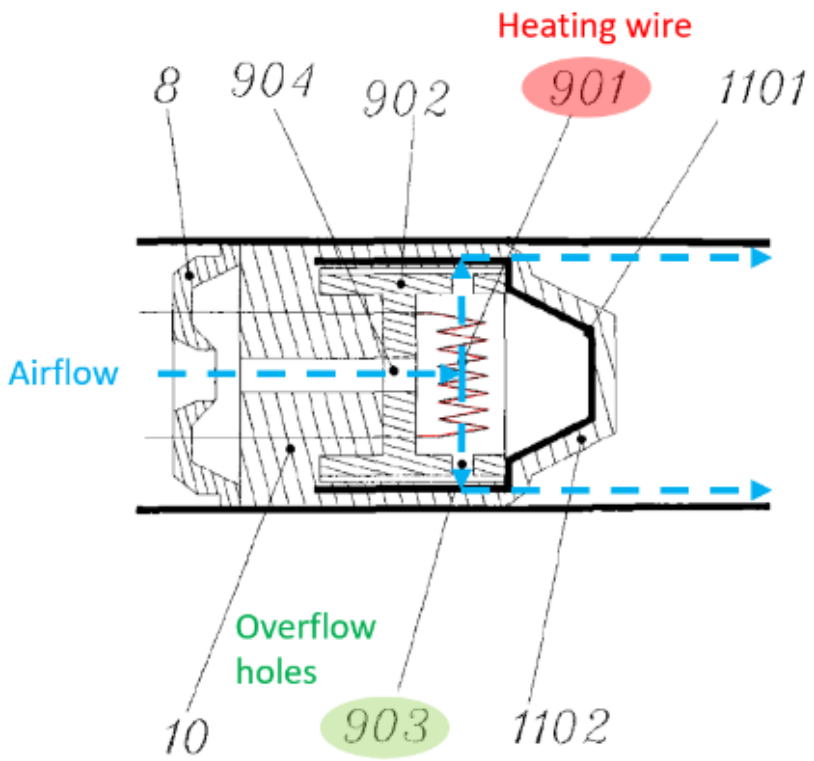

Xia at Fig. 4. Annotated to Show Airflow Path Over Heating Element.

119. As shown below, Figure 5 of Xia depicts air flowing between the soft suction nozzle and the liquid storage chamber with a black arrow.

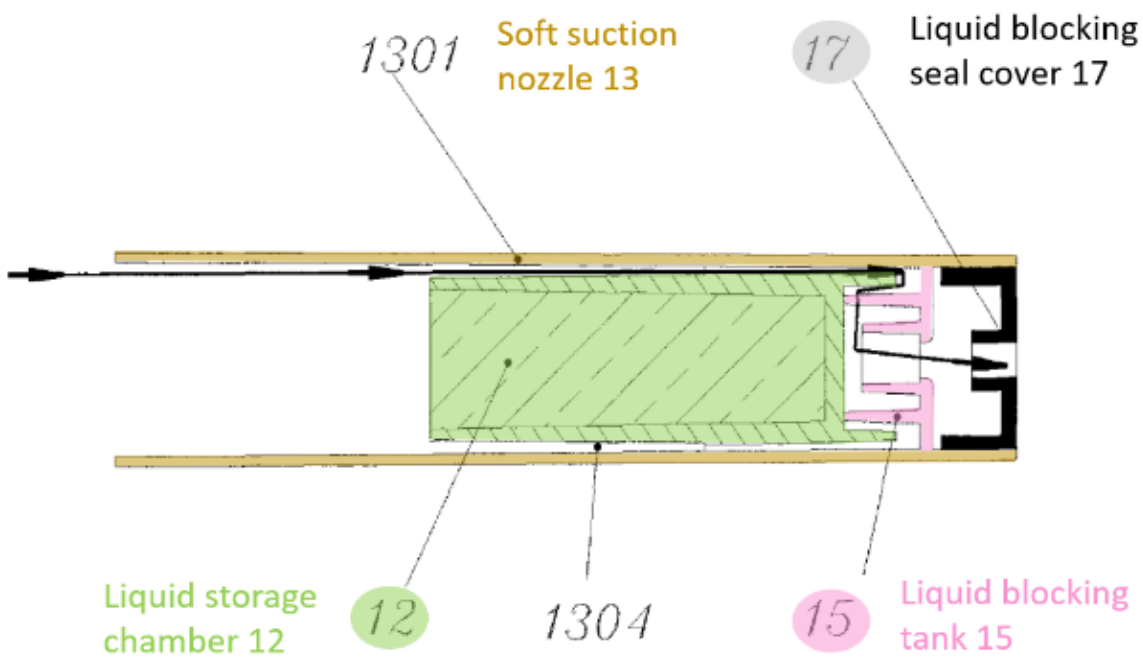

Xia at Fig. 5

120. Before exiting, the air passes the liquid blocking tank 15 to remove additional liquid that was not fully vaporized. [Xia at 13 ("the liquid blocking tank 15 made of soft silica gel to prevent the liquid from being sucked into the mouth is further arranged on the inner side of the soft suction nozzle 13.").] Finally, the vapor exits the generator at a liquid blocking sealing cover 17, which further traps and removes excess liquid from the airflow. [*Id.* ("The soft suction nozzle 13 is further provided with the liquid blocking sealing cover 17 made of soft silica gel to prevent the liquid from being sucked into the mouth.").]

121. In addition to the operating principles described above, Xia teaches some other features that are relevant to Dr. Sturges' validity analysis. For example, given that Xia utilizes a droplet-heating process that starts with the formation of chemical liquid droplets, there is a problem with liquid leakage. Leakage of the chemical liquid toward the consumer's mouth is at least partially addressed by the capturing and reabsorbing of the large-sized droplets described above. However, other sources of leakage exist and Xia explains that the "liquid blocking tank 15 and the liquid blocking sealing cover 17 are used to prevent the chemical liquid from being sucked into the mouth." [Xia, page 6.] Leakage out the other side of the generator - downward toward the controller - is blocked by the liquid-blocking plate 8.

122. Furthermore, Xia teaches "a heat insulation layer" that is "arranged in the stainless steel shell of the generator." [Xia, page 3.] This layer insulates the heater so that the outer shell, held by the user, does not get hot. Therefore, there is no need to redirect the airflow away from the shell of the device. In fact, I note that Xia is designed such that the airflow passes through holes in this insulation layer and travels along the inside of the shell so that the airflow can be cooled before it exits the device into the user's mouth.

123. Xia also explains how the heater is turned on and off:

> ...under the action of suction by the smoker, airflow enters the inside of the generator from the air inlets 702 on a side surface of the generator, under the action of the airflow, the vibrating diaphragm 7 vibrates, the electret microphone 4 also vibrates accordingly, after vibration is converted into a switching signal through a controller IC1 (see Fig. 6) on the integrated circuit board, the heater 9 starts working... [Xia, Page 5.]

124. The vibrating diaphragm must be within the airflow path in order to be excited (vibrated) by the suction of the user. Therefore, any modifications that remove the vibrating diaphragms 7, or move them out of the airflow path, would render Xia inoperable because the heater would not turn on.

125. The operating principle of Xia is very different than the other two references, Wang and Fang, which are used in Dr. Sturges' obviousness analysis. Given its droplet-heating and filtering process, it is not compatible with the purported central airflow passages of Wang and Fang for at least the reason that hot, large-sized chemical liquid droplets would be emitted directly into the user's mouth.

1. Xia is a Three-Piece Device

126. Based on Xia's disclosure, a POSITA would have understood that the liquid storage component and the atomizing component are separate components. For

example, as shown below, Fig. 5 of Xia depicts the liquid storage component, and illustrates that the liquid storage chamber 12 has a straight edge on the left.

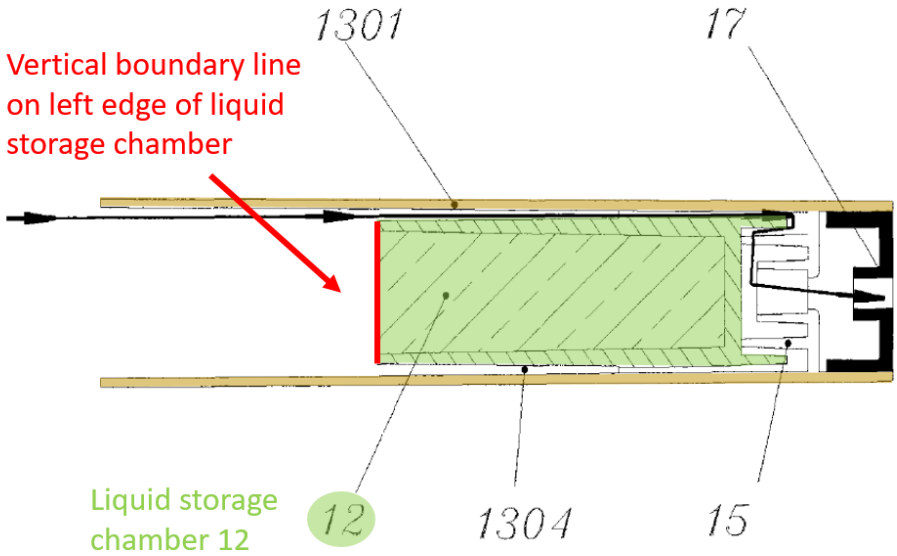

Xia at Fig. 5. Annotated.

127. In contrast, Fig. 2, which is provided below in annotated form, depicts the liquid storage component in combination with the atomizer component to form the generator. When the two parts are assembled, the left edge of the liquid storage chamber 12 conforms to the shape of the right surface of the atomizing component.

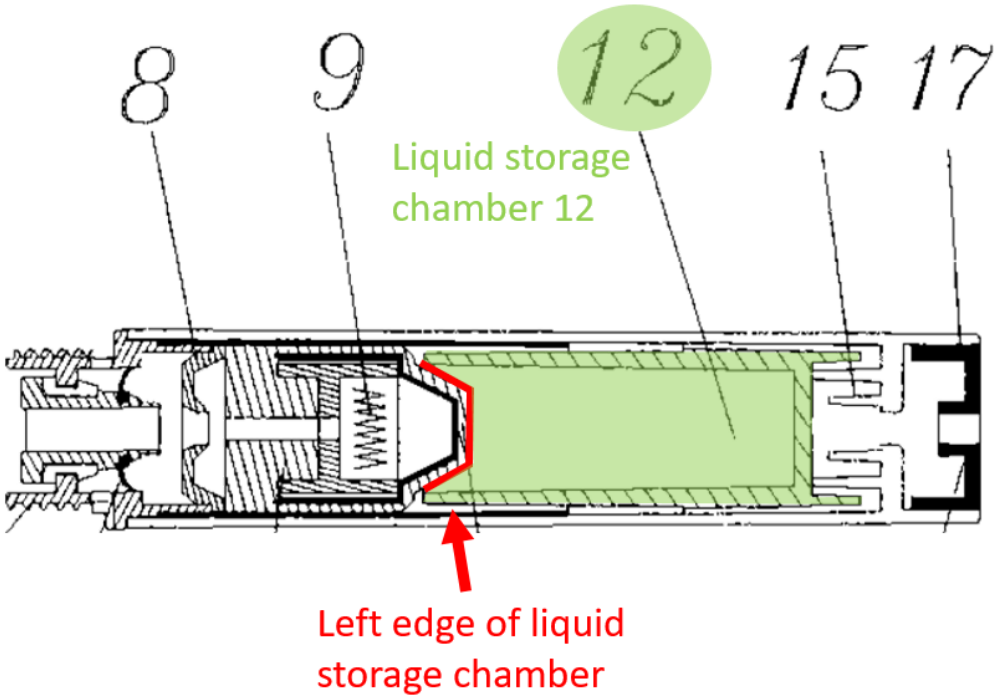

Xia at Fig. 2. Annotated.

128. Moreover, Fig. 5 shows that the liquid storage component has an outer shell 1301. The specification explains that the shell "may be made of environmental-friendly materials such as polypropylele PP." [Xia at 13.] In contrast to this plastic shell, Fig. 4 shows that the atomizing component has a shell represented by black lines. A POSITA would have understood that the black lines represent the atomizing component's stainless steel shell. [Xia at 7 ("stainless shells are arranged on an outer surface of the controller and an outer surface of the generator.").] As can be seen in

Figure 2 below, the polyporylene PP shell of the liquid storage component slides onto the stainless steel shell of the atomizing component to form the generator assembly.

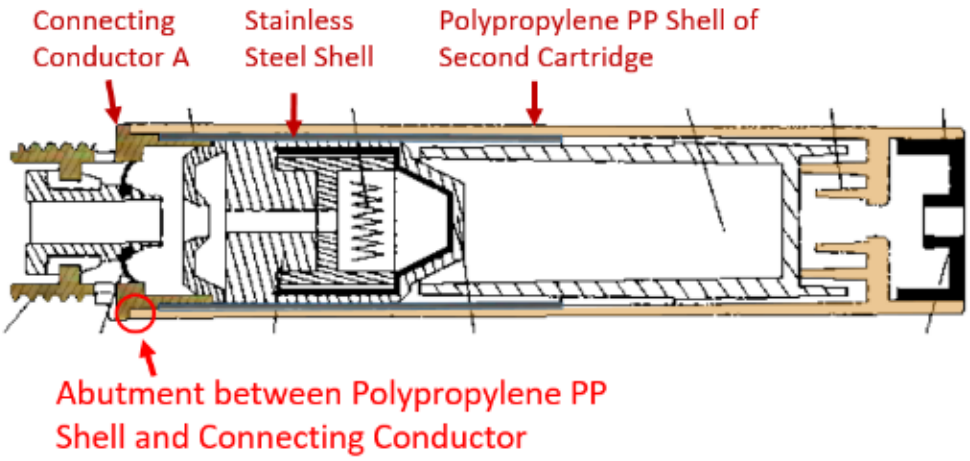

Xia at Fig. 2. Annotated.

129. The fact that Xia discloses a three-piece device (battery portion, atomizer, and liquid storage) is apparent when considering another prior art device disclosing a similar configuration. Specifically, in the related ITC Investigation, Juul asserted the NPRO prior art device against the challenged claims. I have examined the NPRO Device. It is my opinion that it is a three-piece device comprising a battery portion, an atomizer, and a liquid cartridge. I understand from counsel that Juul did not dispute in the related ITC Investigation that NPRO is a three-piece device. [*See* EX2008.096 (showing photo of NPRO liquid cartridge), EX2009.099 (showing photo of NPRO atomizer cartridge)].

130. As shown below, CT-Scans of NPRO reveals that its configuration is nearly identical to that of Xia. Thus, this comparison with NPRO confirms that a POSITA would have understood that Xia discloses a three-piece device.

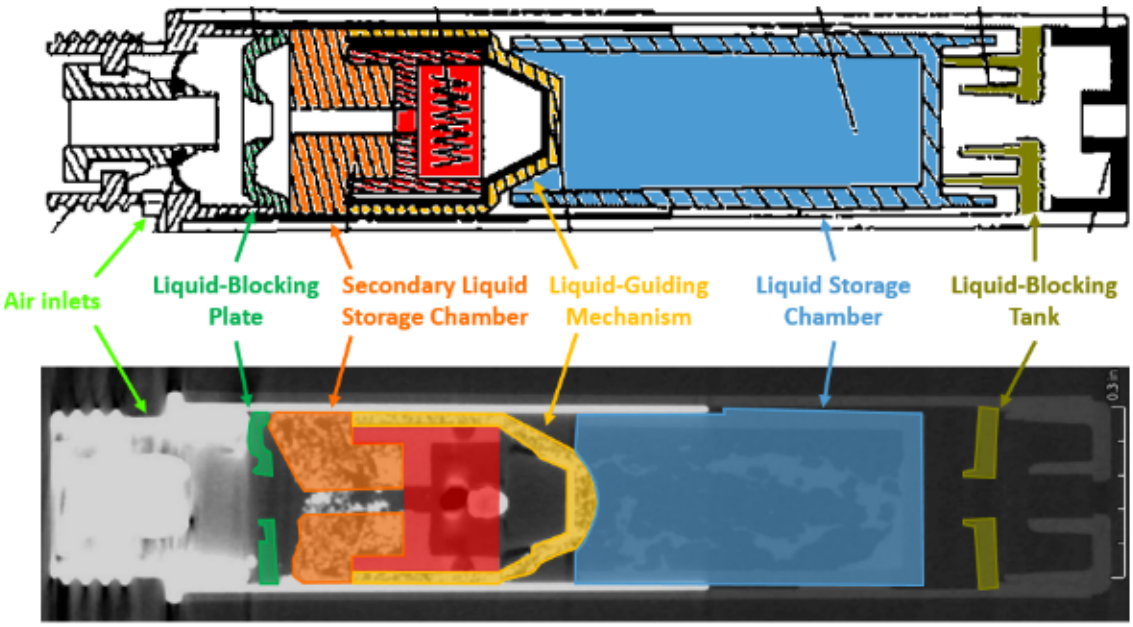

Xia at Fig. 2 (top); EX2013.0021 (bottom)

131. A POSITA would have further understood that Xia is designed such that when the vaporizable liquid in the liquid storage component is depleted, only the liquid storage component needs to be replaced. The atomizing component may be reused. This is consistent with teachings of prior art references from a similar time period disclosing similar replaceable liquid cartridges. For example, Korean Publication No.

20-2010-0004364 discusses a cartridge type e-cigarette "that uses a separate plastic cartridge (33) that is discarded after one use." [EX2037 at (57), Fig. 8.] This replaceable liquid cartridge structure is shown below in Figure 8 from that Korean Publication.

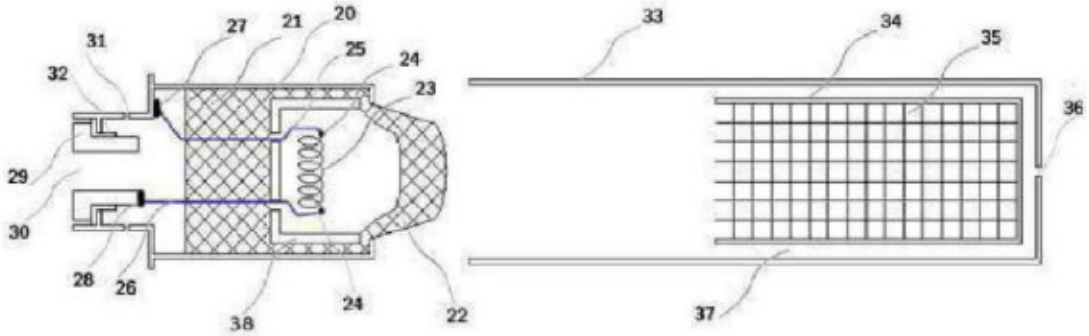

EX2037, Korean Publication No. 20-2010-0004364, Fig. 8

132. As another example, U.S. Patent Publication No. 2009/0095311 ("Han") discloses an e-cigarette having a similar replaceable liquid cartridge (b), as shown below. [EX2001 (Han), [0037] ("When the nicotine liquid in the cigarette bottle assembly is used up or the cigarette bottle assembly is damaged and needs to be changed, the operation will be extremely easy.").]

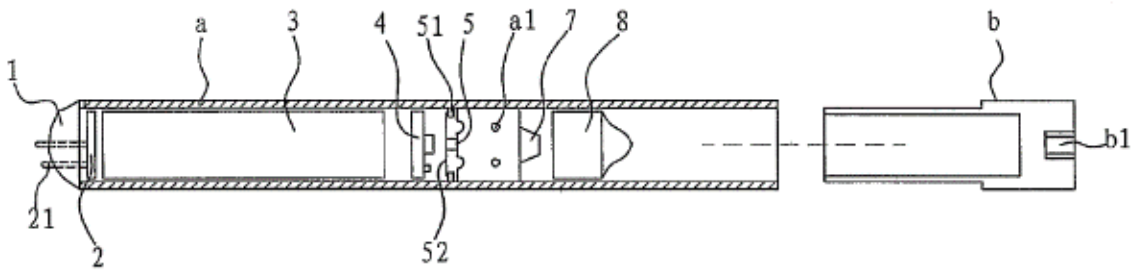

图2

EX2006 (Han) at Fig. 2

2. Similarities between Xia and Han

133. Han and Xia also disclose similar atomizers. Both have a porous outer wall for contacting the liquid storage material and absorbing the vaporizable liquid. [(Xia at 10 ("chemical liquid flows from the liquid storage chamber 12 into the secondary liquid storage 10 through the liquid-guiding mechanism 11"); Han at [0071] ("one end of the porous component (81) lies against one end surface of the said perforated component for liquid storage (9)…It absorbs the cigarette liquid from the perforated component for liquid storage (9).")] Both have a heater element located within a cavity formed by the porous material. [Xia at 10 ("heater 9 is wrapped with the liquid-guiding mechanism."); Han at [0067] ("The electric heating rod (82) enters into the atomizing chamber (811).").] Both devices are capable of spraying liquid stored porous material onto the heating element. [Xia at 13 ("small droplets are sucked into the other side of the heat insulation seat 902 through the spray hole 904 in the heat

insulation seat 902); Han at [0071] ("the airflow sprays into [the negative pressure cavity], bringing the cigarette liquid from the porous component (81) to spray into the negative pressure cavity (83).").] Finally, both devices have a chamber capable of removing excessive large liquid droplets from airflow via vortex action. [Xia at 16 ("large-diameter droplets after atomization are attached to a wall under the action of a vortex to be reabsorbed by the liquid-guiding mechanism through the overflow holes."); Han at [0071] ("After atomization, the big-diameter fine drips are re-absorbed by the porous component (81) under the action of vortex.").]

134. As shown below, the airflow path of Han and Xia's devices are also similar. In both devices, air enters via air inlets on the side walls of the device, continues into the cavity within the atomizer to be heated, and then travels around the liquid storage material to reach the air outlet. [*See* Section IV.C.2, *supra* (discussing Han's airflow path); Section V.A, *supra* (discussing Xia's airflow path).]

NJOY Exhibit 2022.081
Juul v. NJOY
IPR2024-00161

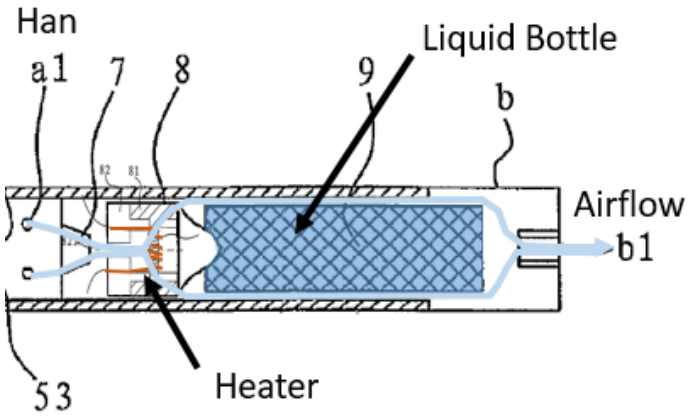

EX2006, Fig. 1 (Han airflow path)

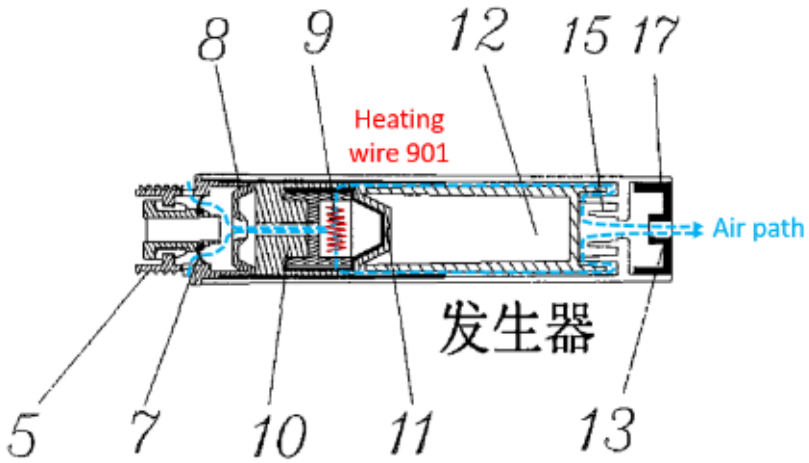

Xia at Fig. 2 (Xia airflow path)

B. Overview of Wang

135. Chinese Patent Publication No. CN 101366554A ("Wang") generally discloses an e-cigarette device comprising a "cigarette holder" and a "cigarette rod." [EX1005 (Wang), 1.] A POSITA would have understood that the "cigarette holder"

generally corresponds to a cartomizer and the "cigarette rod" generally corresponds to a battery portion.

136. Specifically, Wang Fang 2, which is provided below in annotated form, discloses that the cigarette rod consists of a rod shell 111, a battery 110, a sensor 112, an indicating lamp 114, an indicating lamp cover 116, a circuit board control 113, an air inlet 115, an outlet 108, and an output end 109 which is a threaded electrode connector. [EX1005 (Wang), 5.]

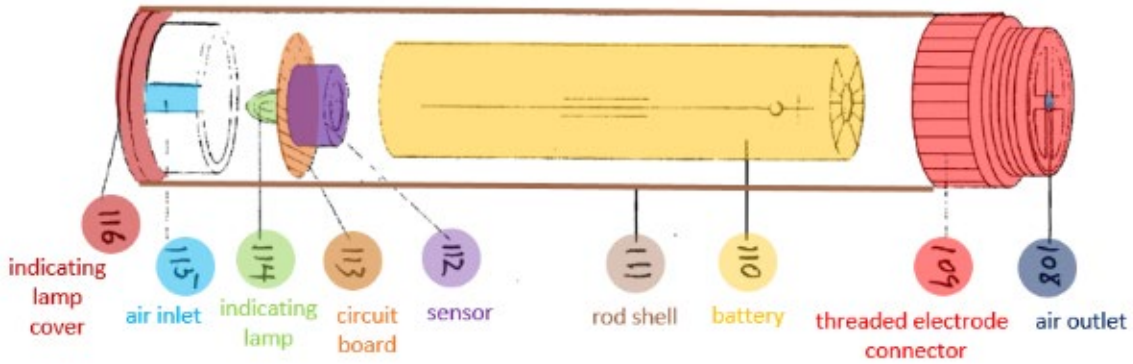

Wang Fig. 2. Annotated.

137. As shown below, the cigarette holder consists of a cigarette holder shell 102, an electric heater 104, a tobacco extract 103, an organic fiber 105, an air inlet 106, an air outlet 101, and an input end 107 which is a treaded electrode connector. [Wang,

5.] The input end 107 connects with the output end 109 of the cigarette shell (battery portion) to form the complete e-cigarette device. [*Id.*, 6.]

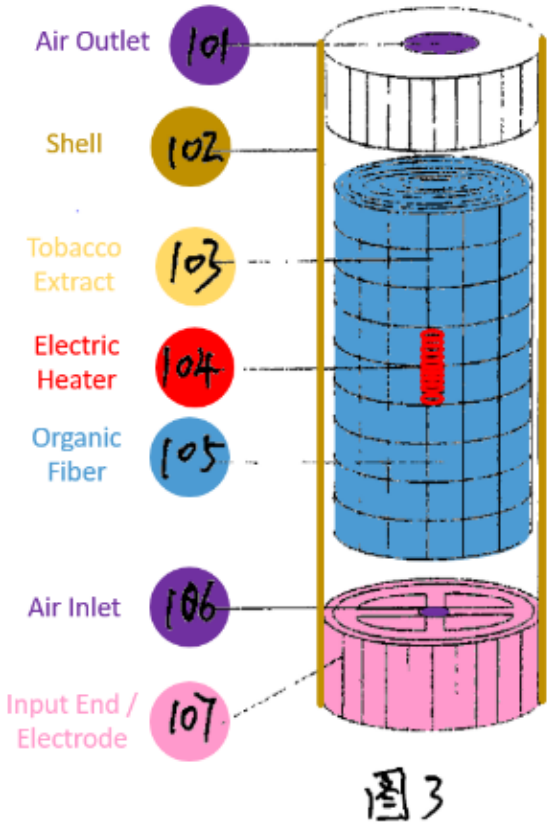

EX1029, Fig. 3[5]; *see also* EX1005, Fig. 3. Annotated.

138. The organic fiber 105 is soaked with tobacco extract 103 and is wound around the electric heater 104. [Wang, 7 ("The tobacco extract 103 of the cigarette holder is natural tobacco absolute oil, a certain proportion of nicotine is mixed in after

[5] EX1029 is the untranslated version of Wang. I use figures from EX1029 because they have higher resolutions.

the tobacco extract is diluted with alcohols in a certain proportion, and then a mixture quantitatively soaked in the organic fiber 105.”).] As shown below in annotated Wang Fig. 3, the organic fiber is positioned within the shell 102 such that gaps form between the fiber and the shell to allow air and vapor to travel from the air inlet 106 to the air outlet 101. [Wang, 7 (“The interior of the shell 102 provides a space for the electric heater 104 and the tobacco extract 103 and organic fiber 105 wound around it, and also provides a space for smoke produced when the tobacco extract 103 in the organic fiber 105 is heated by the electric heater 104.”).] These air gaps are shown below in the annotated version of Wang Fig. 3.

NJOY Exhibit 2022.085
Juul v. NJOY
IPR2024-00161

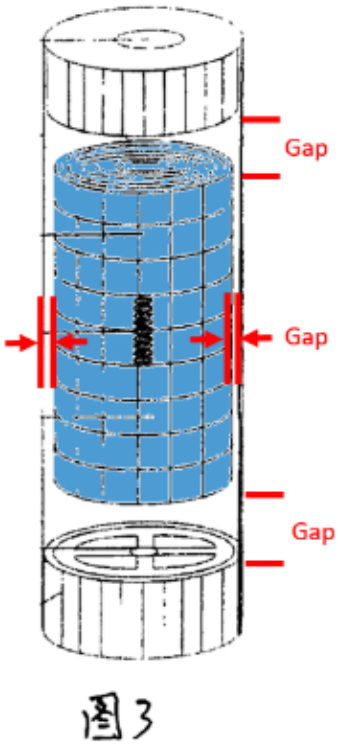

Wang at Fig. 3. Annotated.

139. I understand that Juul argues that there exists a central air passageway through the organic fiber. I disagree. I have not seen disclosure of such an air passageway anywhere in Wang. Instead, Wang discloses that "[t]he air inlet of the cigarette rod, an internal gap of the cigarette rod, the air outlet 108 of the cigarette rod, the air inlet 106 of the cigarette rod, an internal gap of the cigarette holder and the air outlet 101 of the cigarette holder form the complete airflow channel." [Wang, 8.]

140. Dr. Sturges states that "Wang's central air passageway is also depicted in Wang's Figure 5, which illustrates that the organic fiber 105 comprises fiber or paper that is rolled up so that it defines and contains a central passageway." [Sturges Decl. ¶ 57.] He provided the figure below in an attempt to "annotate[] to show what would be understood from [Figure 5]." [*Id.*]

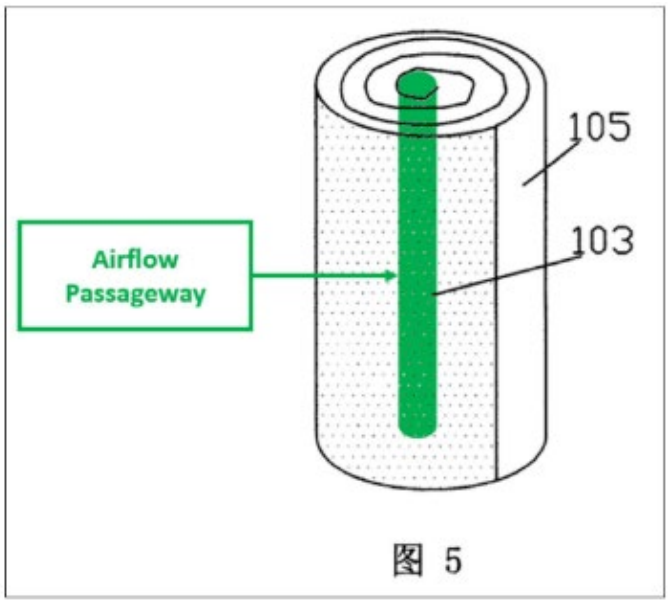

Sturges 881 Declaration ¶ 57

141. Dr. Sturges' annotation, however, is deceptive. I have reproduced the original Wang Figure 5 below. It simply does not depict a central airflow passageway. A POSITA would not have understood that just because Figure 5 depicts fiber or paper that is rolled up, it must contain a central airflow passageway. A piece of fiber or paper can be rolled up without leaving a channel in the middle. Furthermore, the spiral on

the top surface of the fiber 105 indicates it is rolled up tightly without a gap in the middle.

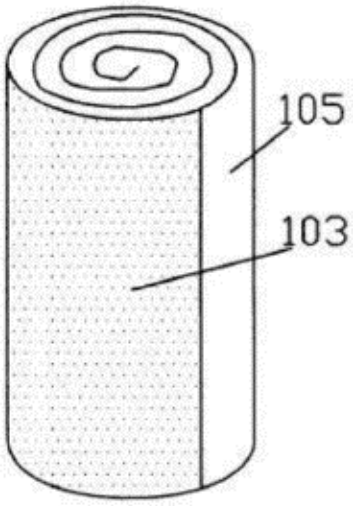

Fig. 5

Wang at Fig. 5

142. Note that in Figure 5 of Wang, label 105 is the organic fiber 105. As such, a POSITA would understand that the black lines represent divisions between the layers of the fiber. A POSITA would not interpret the black lines themselves to be the fiber and the white area to be the space between layers of the fiber – that would be inconsistent with the labelling of Figure 5.

143. Moreover, Wang's operating principle is very different than Xia's in that it has a longitudinal (not transverse) heating element rolled up in material that is soaked

with liquid. Therefore, it cannot use Xia's process of creating droplets, heating them, and then "filtering out" large droplets. Wang simply generates vapor without generating large droplets that need to be captured and reabsorbed. Nor is there a need for liquid blocking plates. As a result, unlike Xia, Wang can use a more direct airflow path into the user's mouth after the vaporization process.

1. The Wang Declaration Does Not Support the Existence of a Central and Axial Airflow Passageway in Wang

144. I understand that Juul submitted a declaration (the "Wang Declaration") from Shanhong Wang, the named inventor of Wang. I understand that the Wang Declaration is not prior art and may not be properly considered in this IPR. Nevertheless, assuming that the Wang Declaration is relevant, it is my opinion that the Wang Declaration does not demonstrate that there exists an airflow passageway through the central axis of Wang's cartridge.

145. In his declaration, Mr. Wang attached drawings of an "ALD-V9" electronic cigarette product, which allegedly "covers the invention disclosed in [Wang (reference)]." [EX1017 (Wang Decl.) ¶ 9.] Mr. Wang alleges that the ALD-V9 cartridge comprises "a liquid element 7 along the diameter of the electronic cigarette surrounds a complete central air passageway, in which the heater is positioned." [*Id.* ¶ 10.] As an initial matter, it appears that Mr. Wang is using "passageway" in a

different manner than Dr. Sturges. Mr. Wang is using "passageway" to indicate a small volume in the middle of the device. On the other hand, Dr. Sturges apparently is of the opinion that an airflow passageway is essentially the entire cross-section of the cartridge. Furthermore, I disagree that the ALD-V9 product corresponds to the e-cigarette device disclosed in Wang (reference). As shown below, the ALD-V9 cartridge comprises what appears to be a wick around the heating coil and two spacers around the wire of the heating coil.

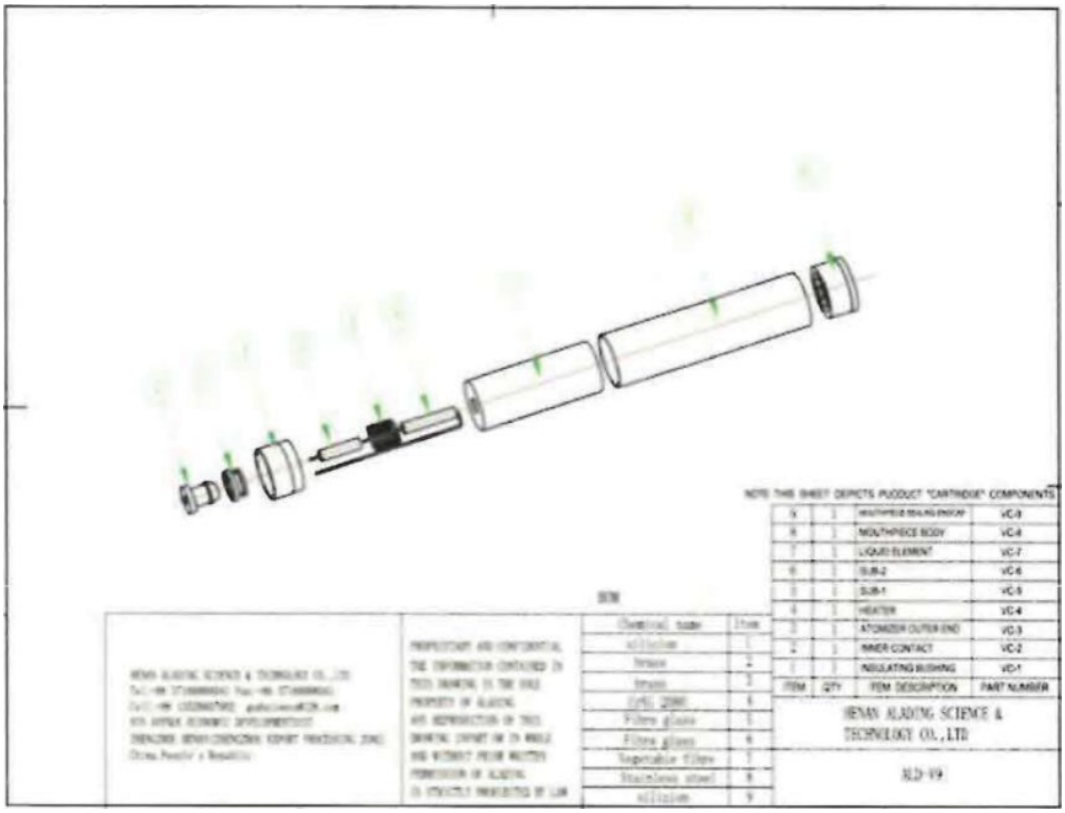

EX1017, 50

146. The existence of the spacers in ALD-V9 is further confirmed by a "Fifty-One two-piece electronic cigarette" discussed in the Wang Declaration and allegedly also "reflect [Mr. Wang's] invention disclosed in the [Wang reference]." [EX1017 ¶ 11.] As shown below, a CT-Scan of the Fifty-One cartridge shows that there are woven spaces surrounding the heating coil and "support the central opening." [*See also* EX1017 ¶ 13 ("In Cartridge 2 and Cartridge 3 [of Fifty-One], I replaced the wick with a fiberglass or woven paper wrapped on the outside of the coiled heating wire.").]

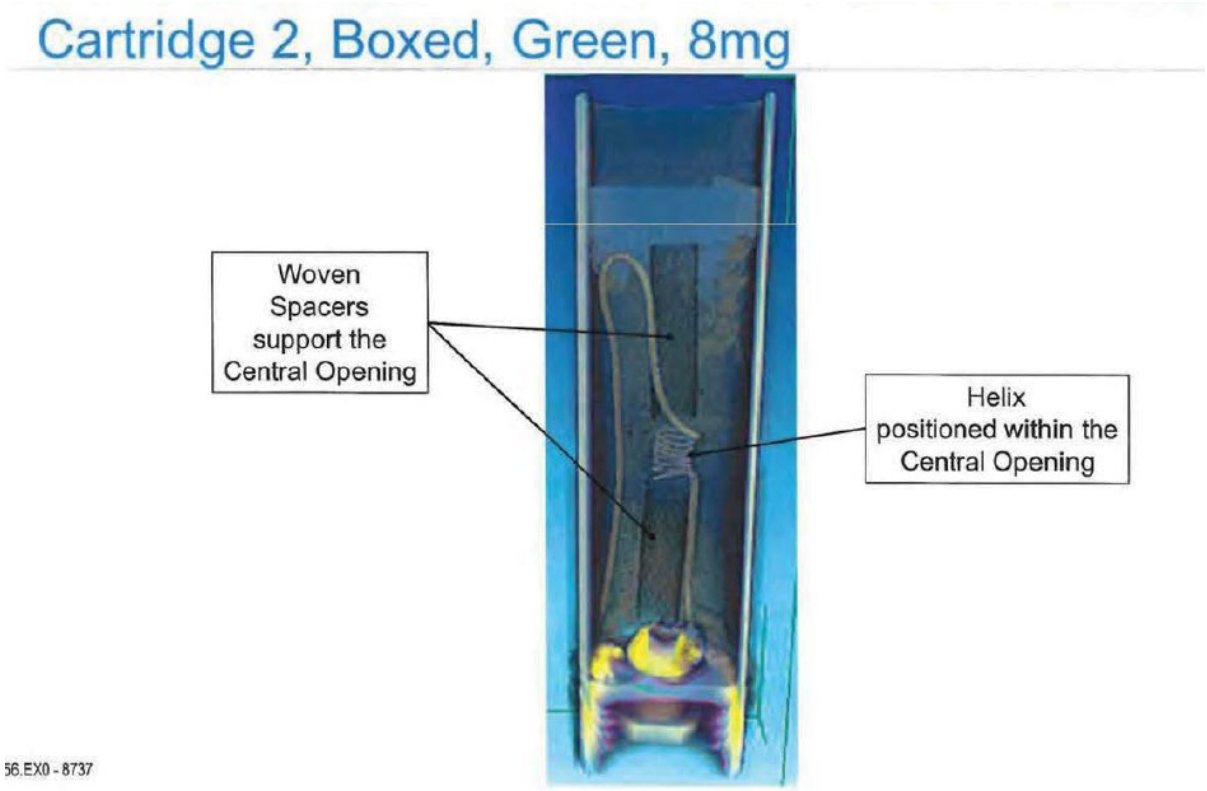

EX1017, 42; *see also id.*, 46, 54 (showing the woven spacers)

147. In contrast, Wang (reference) makes no mention of such spacers around the heating wire. Instead, Wang discloses that the organic fiber 105 is directly wound around the electric heater 104. [EX1005, 7.] This difference is significant when it comes to the existence of a central airflow passageway because the spacers provides support for the liquid storage medium around the heating wire to form a portion of an airflow passageway.

C. Overview of Fang

148. Chinese Patent No. CN201085044Y ("Fang") discloses an electronic cigarette comprising a cigarette rod shell 2 and a sucker 1. [EX1006 (Fang), 5.] Generally, the cigarette rod shell is a reusable battery and atomizer portion, whereas the sucker is a disposable liquid cartridge. Annotated Figure 1 below illustrates the division between the sucker (i.e., liquid storage cartridge) and the cigarette rod shell (i.e., power source).

NJOY Exhibit 2022.092
Juul v. NJOY
IPR2024-00161

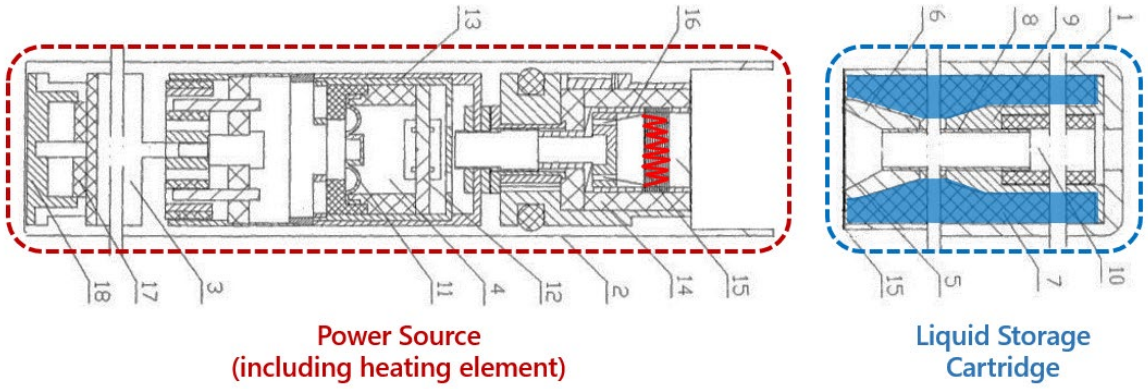

Fang Fig. 1. Separated and Annotated.

149. Specifically, as shown below, the cigarette rod shell comprises battery 3, pressure-activated fuming device control switch 4, electric heating film wire 16 in a vaporization chamber, temporary oil storage 15, and oil storage device 14. [*Id.*]

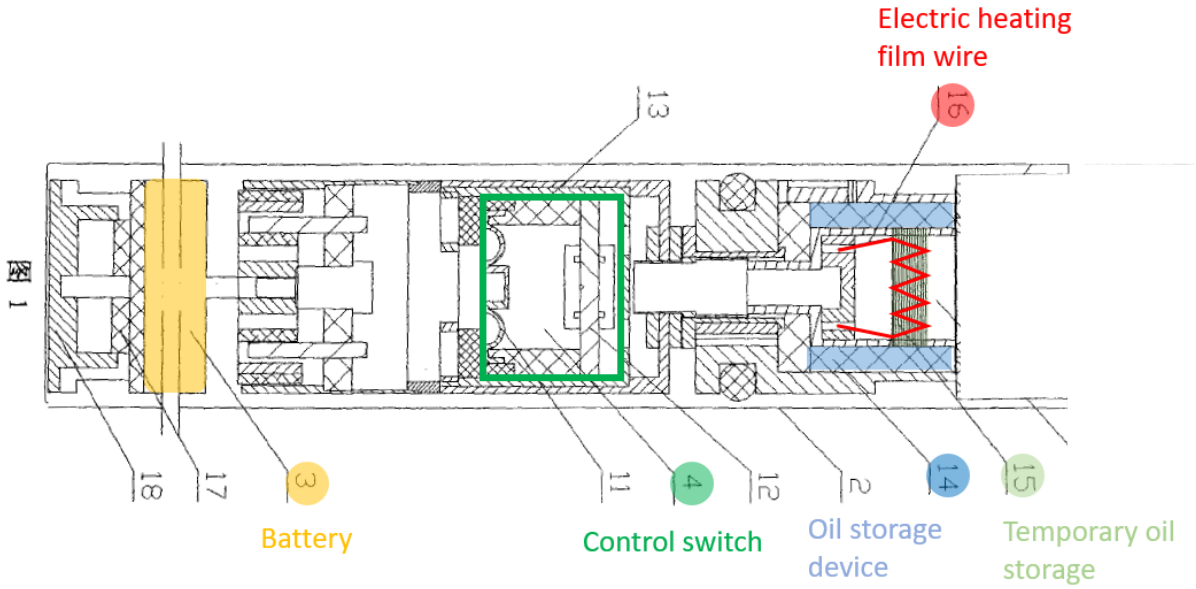

Fang Fig. 1. Cropped and Annotated.

150. As shown below, the sucker 1 comprises a gas pipe 8 and an oil conservator 7 that stores vaporizable liquid. The sucker 1 inserts into an opening at the top of the cigarette rod shell to form a complete e-cigarette device.

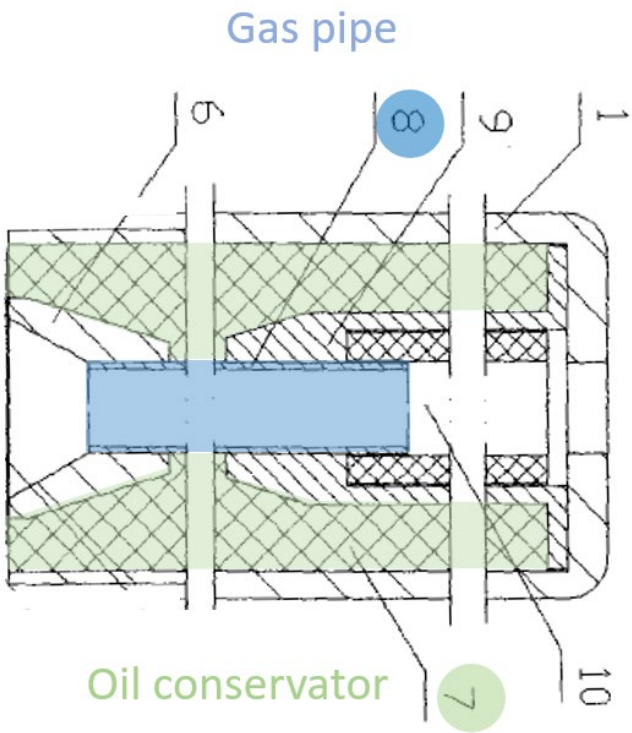

Fang Fig. 1. Cropped and Annotated.

151. Fang's operating principle is very different than Xia's in that it has a heating element wrapped in a wick. Therefore, it does not use the process of creating droplets, heating them, and then "filtering out" large droplets. Fang simply generates vapor directly off the surface of the heated wick. Fang does not need to capture and

reabsorb large droplets of chemical liquid, nor does it need liquid blocking plates. As a result, unlike Xia, Fang can use a more direct airflow path into the user's mouth after the vaporization process.

152. I understand that Dr. Sturges argues that Fang discloses a central airflow passageway as shown below. I disagree.

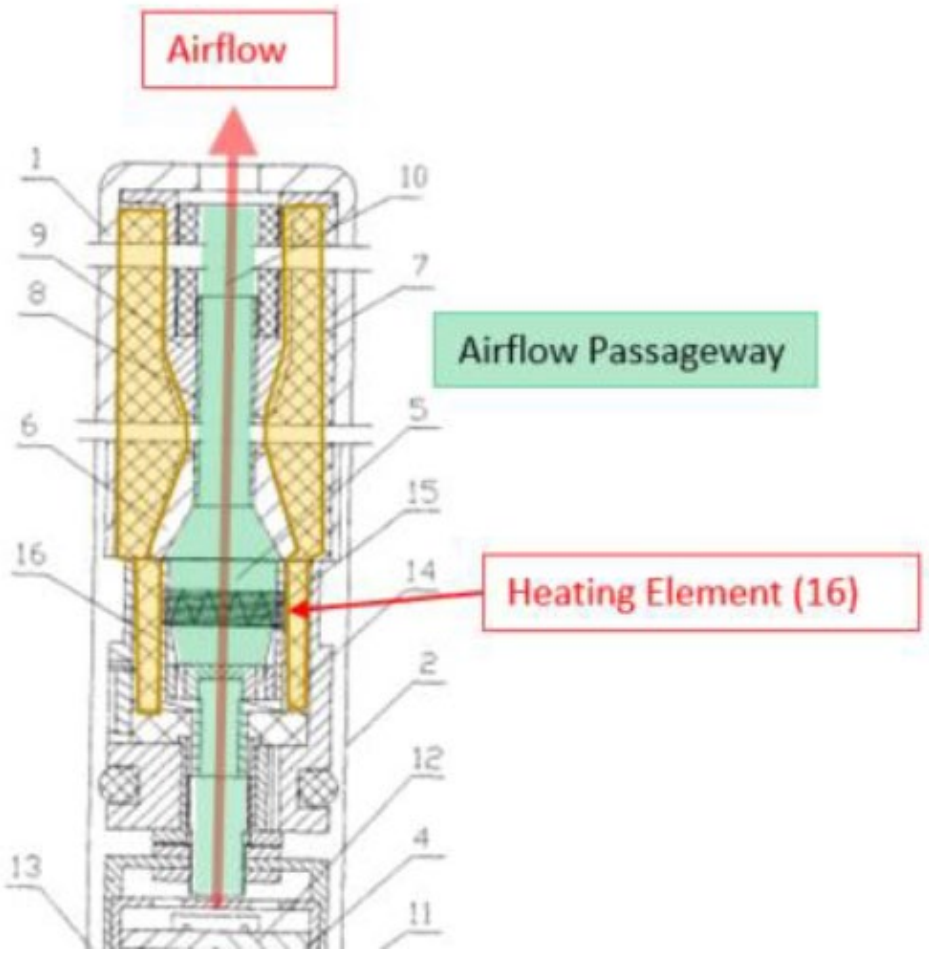

Sturges 881 Decl. ¶ 287 (annotating cropped Fang Fig. 1)

153. First, Fang contains no disclosure of an air inlet into its device. Without identifying an air inlet, Juul cannot meet its burden to identify an airflow passageway, which a POSITA would understand is a passageway for air to flow through the housing from an air inlet to an air outlet. [*See e.g.*, 881 Patent at claim 1 ("the airflow passageway is configured to allow an airflow through the cartridge from the first aperture to the second aperture of the housing.").]

154. Moreover, all challenged claims require "the airflow passageway is configured to allow an airflow through the cartridge from the first aperture to the second aperture of the housing." [*See e.g.*, 881 Patent, claim 1.] As explained above, a POSITA would have understood the claimed "first aperture" to be an aperture in the housing, not within the interior of the housing. [Section IV.C.1, *supra*.] What Juul identified as an airflow passageway in Fang, however, does not start in the housing; rather, it starts in the interior of the housing. Accordingly, the alleged airflow passageway of Fang does not meet the challenged claims. It is, at best, a portion of the claimed airflow passageway.

155. In fact, a POSITA examining Fang Figure 1 would understand that the most probable location for air inlet into Fang's device is on the side walls of the cigarette rod shell, as shown below, where there is different cross-hatching in the

device wall. The location identified below is the only place where Figure 1 depicts a possible air gap. All other locations are surrounded by uniformly cross-hatched structures, none of which appears to include a gap or hole for air entry.

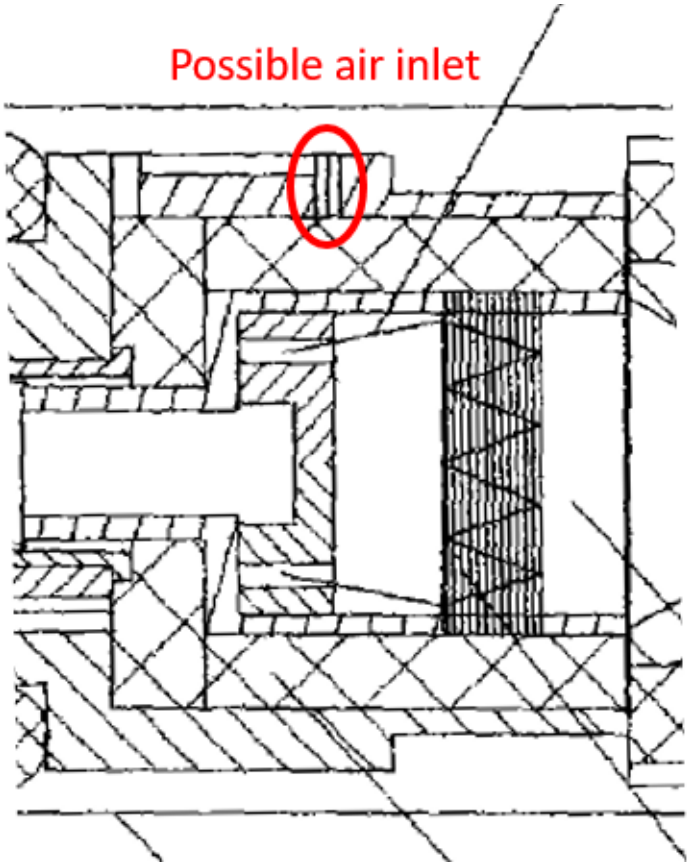

Fang at Fig. 1. Cropped and Annotated.

156. Second, Fig. 1 of Fang depicts a solid wall across the purported airflow passageway, as shown below. This wall prevents airflow from the pressure sensor to

the air outlet. Therefore, the purported airflow passageway Juul identified conflicts with the disclosure of Fang.

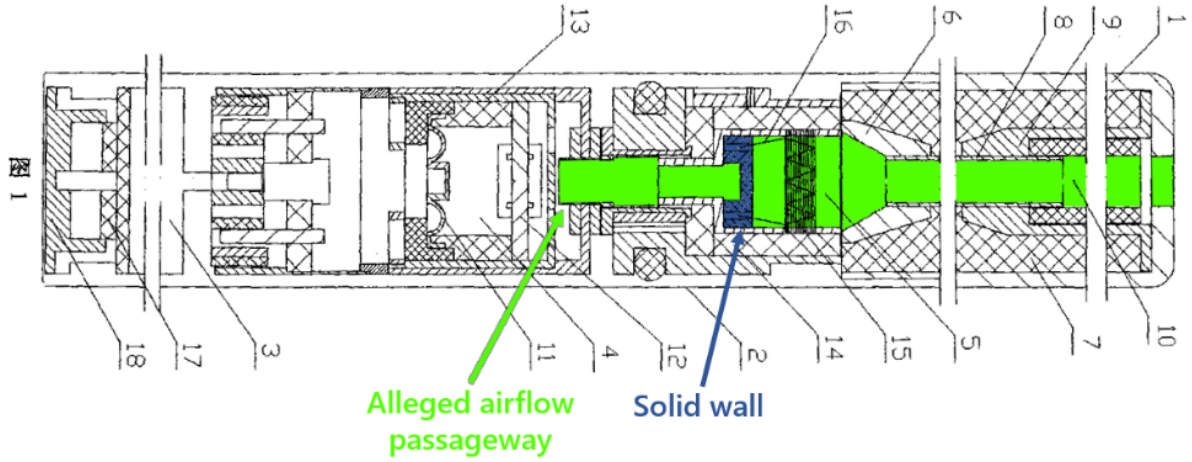

Fang at Fig. 1

157. A POSITA would have understood that Fang is still operable with the solid wall. For example, a POSITA would have understood that the wall may be made of a flexible material such as a diaphragm. In this situation, the user's inhalation creates a negative pressure between the diaphragm and the pressure sensor to active the pressure sensor in order to turn on the device.

VI. Ground 1: Claims 1–27 Would Not Have Been Obvious Based on Xia or Xia in View of Wang and/or Fang.

158. I have analyzed Petitioner's Ground 1 against the challenged claims of the 881 Patent based on Xia, Wang, and Fang and Dr. Sturges' analysis of that ground.

I disagree with Petitioners' and Dr. Sturges' argument that Xia on its own, or in view of Wang and/or Fang renders obvious claims 1–27 of the 881 patent.

159. The claims are not rendered obvious because Juul and Dr. Sturges failed to show that a POSITA would have been motivated make the proposed combinations with a reasonable expectation of success. Moreover, Juul and Dr. Sturges failed to show that Xia, alone or in combination with Wang and/or Fang, renders obvious certain limitations of the challenged claims. The unproven limitations and the claim in which they appear are summarized in the following table.

Table of Unproven Limitations in the Xia-Based Obviousness Grounds

	Limitation	**Claims**
1	**"**the housing [includes/having] a first aperture on the first end"	[1.b2], [8.a2], [16.a2]
2	"an airflow passageway [that extends/extending/having a length extending] centrally and axially with respect to the housing intermediate of the first aperture on the first end of the housing and the second aperture on the second end of the housing"	[1.c], [8.b1], [16.b1]
3	cartridge having a housing including a solution holding medium and a heating element	1, 8, 16
4	solution holding medium reservoir surrounding airflow passageway and heating element	[1.h], [8.c2]
5	"the heating element is a coil having a maximum diameter"	2, 10, 18, 21
6	the airflow passageway having a "circular cross section" or a "circular cross section . . . along the majority of the length"	2, 10, 18, 21

7	"the interior of the airflow passageway between the heating element and the second aperture being no smaller in cross-sectional area than the cross-sectional area of the first aperture	3, 11, [16.c3]
8	"the airflow passageway has a uniform cross-sectional area measured perpendicular to a central longitudinal axis of the housing between the heating element and the second aperture."	7, 15, [16.b4], 27
9	the airflow passageway having an exterior adjacent to the solution holding medium along a majority of the length of the airflow passageway	[16.b3]
10	wherein the heating element is in operative connection with a wicking material . . . operative to attract a portion of the solution . . . toward the heating element	26

A. Claim 1

1. Limitation [1.b2] – Xia

160. Claim 1 recites "wherein the housing includes a first end and a second end that is opposite the first end, wherein the housing includes a first aperture on the first end and a second aperture on the second end." In my opinion, Juul and Dr. Sturges have failed to show that Xia teaches or renders obvious this limitation.

161. Dr. Sturges has failed to show that Xia teaches this limitation because he has not identified a first aperture of the housing. The figure below shows Dr. Sturges' identification of various claim elements. Among other things, he identified the stainless steel shell of Xia as the claimed "housing," but did not identify an aperture in

the housing. Instead, he identified an aperture formed in the secondary liquid storage chamber 10 as the claimed "first aperture." [Sturges 881 Decl. ¶ 81.] Furthermore, he identified two amorphous areas represented by large circles as the "first end" and the "second end." [*Id.* ¶ 86.]

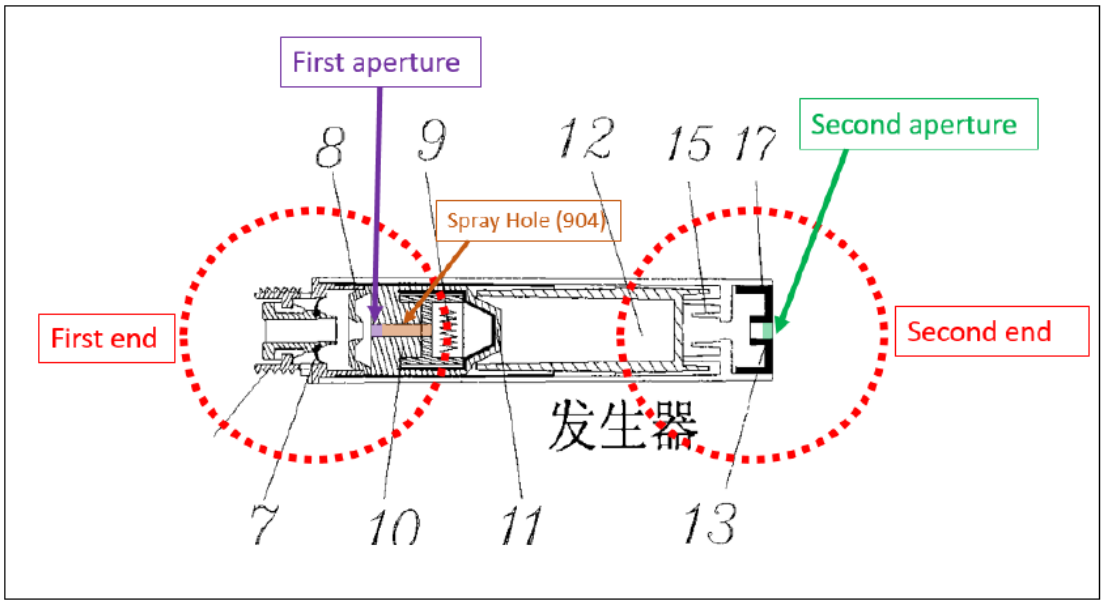

Sturges 881 Decl. ¶ 86.

162. As an initial matter, Dr. Sturges' identification of "first end," and "second end" are incorrect. As I explained above, a POSITA would understand "housing" to mean "an outside structure containing device internals" and the "end" to have its plain and ordinary meaning, which is the "the extrema of an object." [Section IV.B.1, 2,

supra.] Interpreting the terms correctly, a POSITA would identify the "housing," "first end," and "second end" in Xia in the manner shown below. [6]

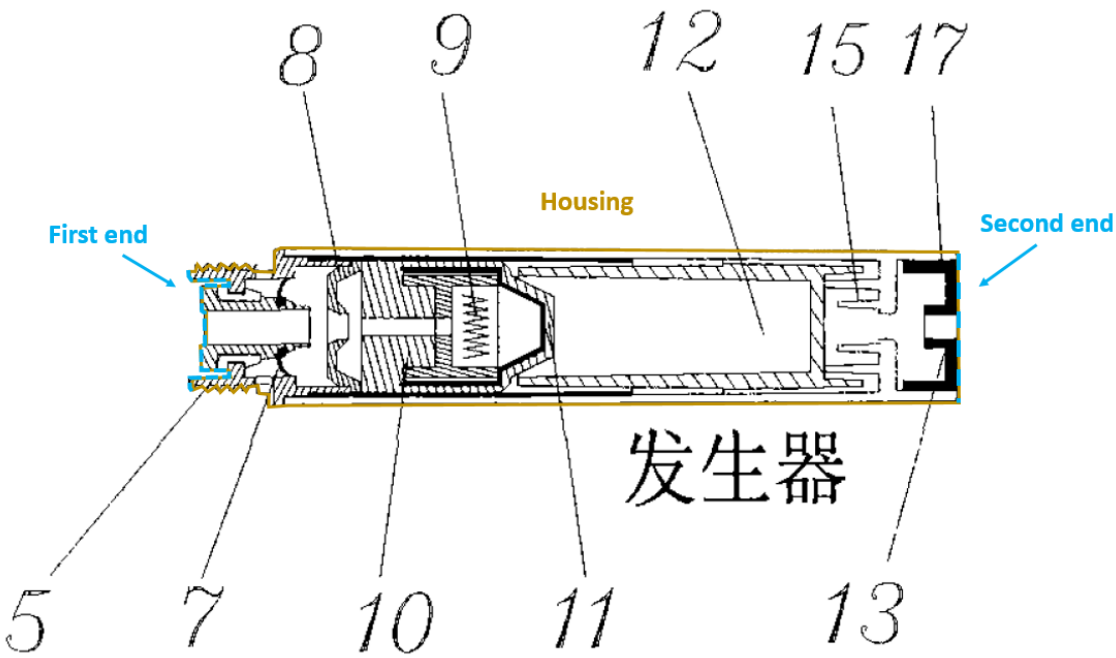

Xia at Fig. 2. Cropped and Annotated.

163. As I explained in detail above, a POSITA would understand the term "the housing having a first aperture on the first end" to mean "a hole in the housing structure at a location on the first end of the housing," not an aperture located in the interior of

[6] Note that Xia does not actually discloses or render obvious a cartridge having a single housing comprising both a solution holding medium and the heating element, as the claim requires. [*See* Section VI.A.5, *infra*.] My annotation of housing in the figure below assumes the existence of such a housing for the purpose of illustrating JLI's erroneous identification of the first and second ends and apertures.

the housing. Dr. Sturges has failed to show that Xia teaches this limitation because he has not identified a first aperture ***on*** the housing. As shown below, Dr. Sturges has identified a purported first aperture that is not being "had" by the housing. Rather it is located within the housing and is on the secondary liquid storage chamber 10. Therefore, the secondary liquid storage chamber, not the housing, it what has the aperture identified by Dr. Sturges.

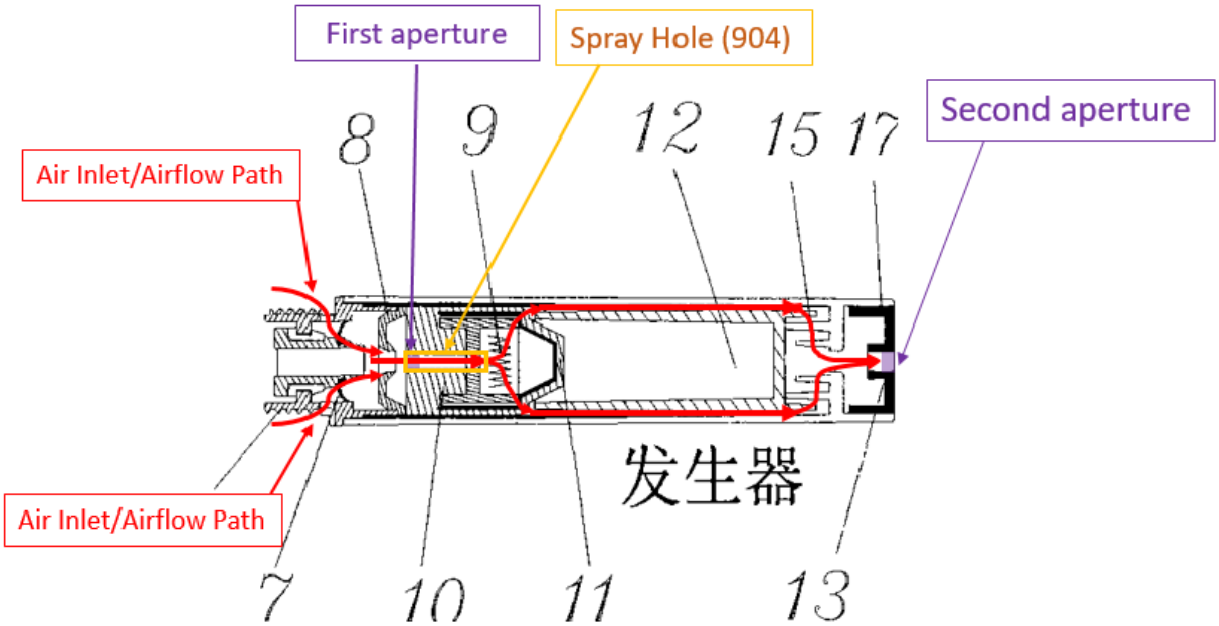

Xia's Purported First Aperture as Represented by Dr. Sturges on Page 38 of His Declaration.

164. As discussed above in my section on claim construction, a POSITA would not consider an opening somewhere inside the housing, and on a component held inside the housing, as the claimed first aperture.

165. Additionally, a POSITA would not consider an opening in the secondary liquid storage chamber 10 to be a housing aperture. Rather, they would understand it to be just what it is – an opening in the secondary liquid storage chamber 10, not an opening of the housing.

166. Dr. Sturges opined that "to the extent the first aperture is required to be on the very edge of the device, a POSITA would know this to be a simple modification to move the air intake to the battery side of the device and have the air enter centrally on the end of the cartridge." [Sturges 881 Decl. ¶ 88.] I disagree. I note that Dr. Sturges provided no reasons why a POSITA would have been motivated to make this modification with a reasonable expectation of success, and I understand that Juul has the burden to demonstrate such motivation. Nor does Dr. Sturges illustrate his proposed modification.

167. In any event, a POSITA would not have been motivated to make Dr. Sturges' proposed modification because it would make the device inoperable. To the extent it can be understood, Dr. Sturges' proposed modification is depicted below.

With the air inlet moved to the left edge of Xia's generator, air flows in a straight line from the new inlet into the atomizer chamber. Critically, this new airflow path does not pass the vibrating diaphragms (7), which Xia teaches activates the device when a user inhales. Therefore, this proposed modification renders Xia inoperable.

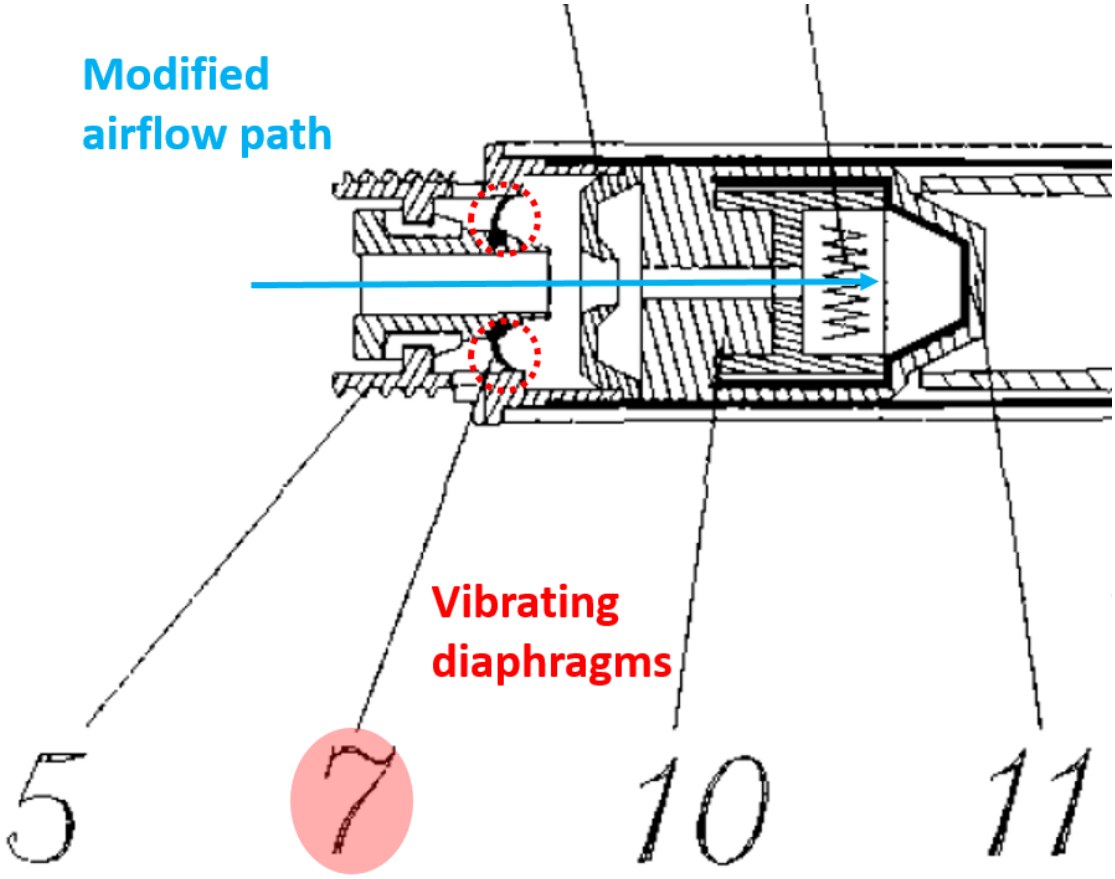

Xia at Fig. 2 (partial, annotated)

2. Limitation [1.b2] – Xia in View of Wang and/or Fang

168. Recall that limitation [1.b2] requires "the housing having a first end and a second end that is opposite the first end, the housing having a first aperture proximate the first end and a second aperture proximate the second end."

169. Given that Xia does not teach a housing having a first aperture on the first end, Dr. Sturges suggests that it would have been obvious to modify Xia "to reposition Xia's 'first aperture' to meet such an additional requirement." [Sturges 881 Declaration, ¶ 89.] Specifically, Dr. Sturges suggest that it was "obvious to include a passageway through the center of the solution holding medium as in Wang." [Sturges 881 Declaration, ¶ 89.]

170. Dr. Sturges presents a diagram to explain how the original, unmodified Xia has flexible diaphragms 7 that help trigger the heater. This diagram is shown below on the left. Dr. Sturges then presents his suggested modification that redirects the airflow down the center of the modified Xia cartridge. He proposes removing the diaphragms as shown below on the right.

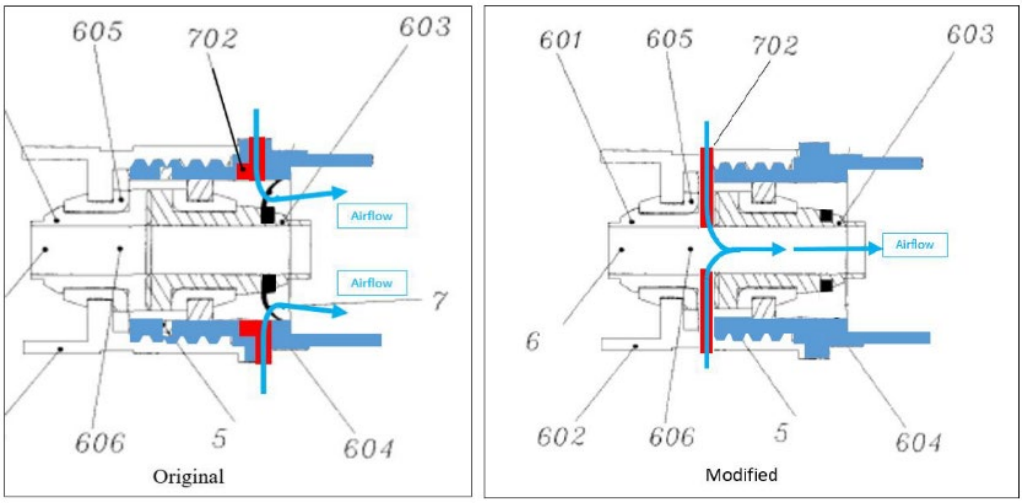

Dr. Sturges' Figures Showing Proposed Modifications that Removed the Vibrating Diaphragms. [Sturges 881 Declaration ¶ 91]

171. Dr. Sturges acknowledges that the new airflow path renders the flexible diaphragms 7 useless – they cannot trigger the heater. Therefore, Dr. Sturges suggests that a POSITA could entirely eliminate the vibrating diaphragms and their essential function in controlling the heater. [Sturges 881 Declaration, ¶ 93.] In an attempt to justify this wholesale modification, Dr. Sturges makes various suggestions regarding how the vibrating diaphragms can be replaced with "pressure sensors as in Fang and Wang," or how a POSITA might modify "the microphone 4 of Xia to use one that is more sensitive to pressure changes." [*Id.*]

172. While Dr. Sturges does provide general suggestions for swapping out components, he fails to fix the problems his modifications create. For example, he

does not explain how the control circuitry shown in Xia Figure 6, reproduced below, would be redesigned to use even one of his proposed substitutions. There is a very good reason that Dr. Sturges did not provide a complete solution to the problems generated by his proposed modifications – making his proposed modifications workable, in regards to the heater control system, would require undue experimentation. Therefore, it is my opinion that the proposed modifications would not have been obvious to a POSITA at the time of the invention.

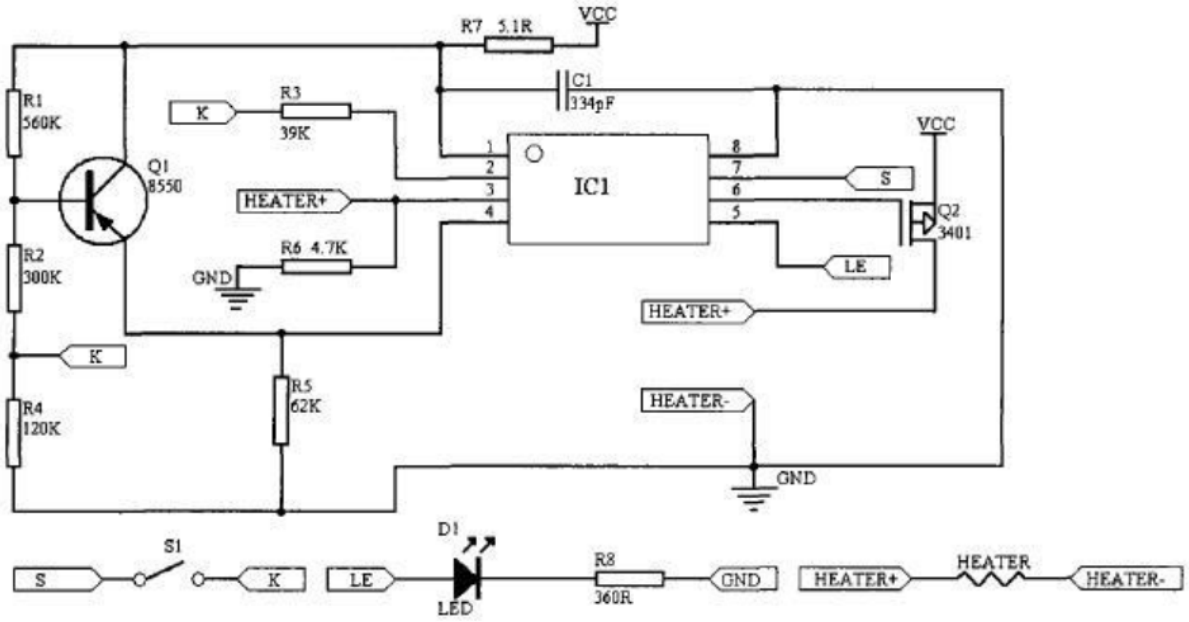

Fig. 6

Xia Fig. 6

173. Dr. Sturges' modification increases the likelihood of liquid leakage to the battery portion by including the battery portion in the airflow path, which a POSITA would have understood to be undesirable due to potential damages to the electrical components in the battery portion.

174. The airflow system in Dr. Sturges' proposed modified device is also significantly different from the airflow system in Wang. In Wang, air flows into the device from an air inlet 115 located at the bottom of the battery portion, travels through the battery portion, then enters the cartridge from central and overlapping battery portion air outlet 108 and cartridge air inlet 106, and finally exits the cartridge from a central air outlet 101. [Wang at 6, 8.] The airflow through Wang's device is shown below. As can be seen, Wang does not disclose air entering from the side surface of its device.

NJOY Exhibit 2022.109
Juul v. NJOY
IPR2024-00161

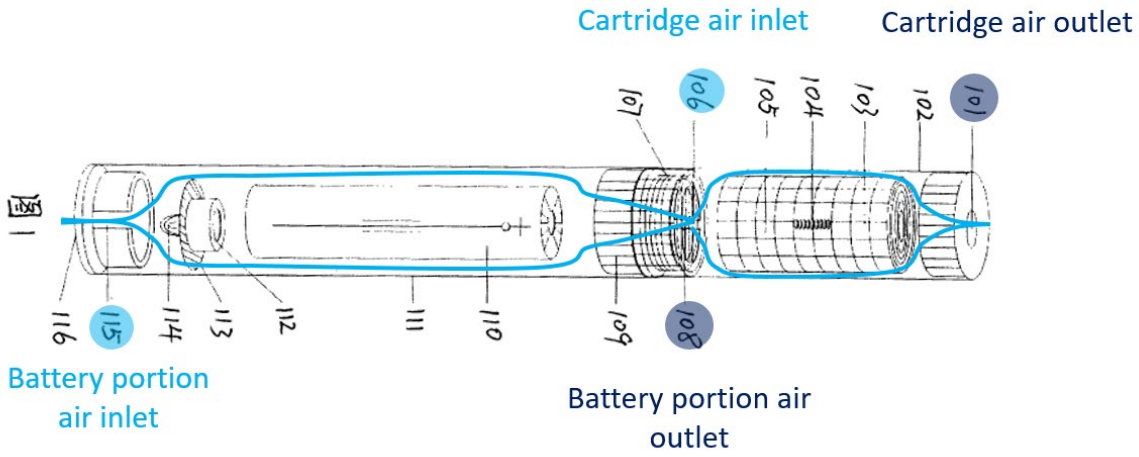

Wang at Fig. 1. Annotated to show the Airflow Path.

3. Limitation [1.c] – Xia

175. Limitation [1.c] requires "wherein the housing includes an airflow passageway that extends centrally and axially with respect to the housing intermediate of the first aperture on the first end of the housing and the second aperture on the second end of the housing." In my opinion, Juul and Dr. Sturges have failed to show that Xia teaches or renders obvious this limitation.

176. Dr. Sturges attempts to define an airflow passageway that he believes will read on the claim limitation. His efforts to this end result in the alleged airflow passageway shown below in green.

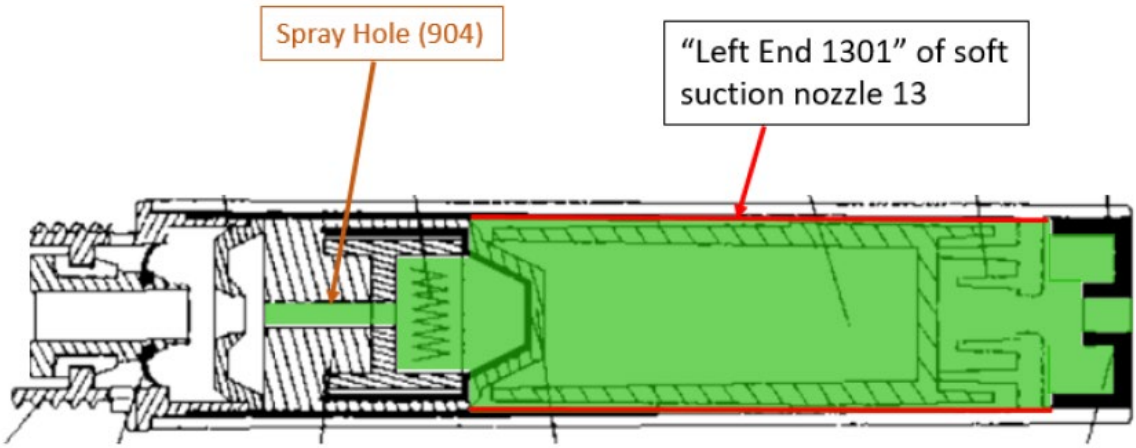

Sturges 881 Decl. ¶ 100

177. Note that Dr. Sturges has identified virtually the entire cartridge downstream of the heater. This includes the entirety of the liquid storage chamber 12. As I explained above, a POSITA would interpret this limitation to encompass allow small obstacles, such as a heating element within the airflow passageway. However, the liquid storage chamber is not an obstacle within the airflow passageway; it is a structure that forms the airflow passageway. [Section IV.C.2, *supra*.] Given the above clarifications to this claim language, it is very easy to see that Xia does not teach this limitation. A POSITA would view the liquid storage chamber as a rigid structure whose outer walls form the inner boundaries of the airflow passageway.

178. Dr. Sturges' identification of the airflow passageway is not only inconsistent with the understanding of a POSITA, it is arbitrary and inconsistent.

Although Dr. Sturges identifies the liquid storage chamber 12 as an obstacle within the airflow passageway; however, he somehow excludes the secondary liquid storage chamber 10 from being within the passageway. Whatever logic was used to include the liquid storage chamber 12, the same logic would seemingly result in the secondary liquid storage chamber 10 also being within part of the airflow passageway. Therefore, a somewhat more consistent airflow passageway, using Dr. Sturges' apparent identification logic, would also include the secondary liquid storage chamber 10, as shown below.

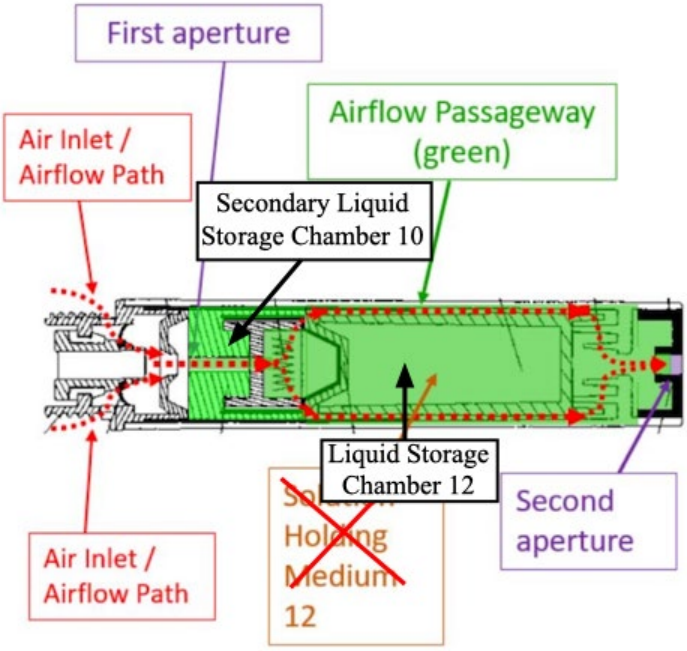

Dr. Sturges' Representation of the Xia Airflow Passageway on Page 74 of His Report. Corrected and Modified to Include the Secondary Liquid Storage Chamber 10.

179. Given that Dr. Sturges' logic apparently identifies virtually everything in the cartridge downstream from his alleged first aperture, I see no reason why the only remaining element, the heat insulation seat 902, would be excluded. Such consistent use of the apparent identification logic results in the air passageway shown below.

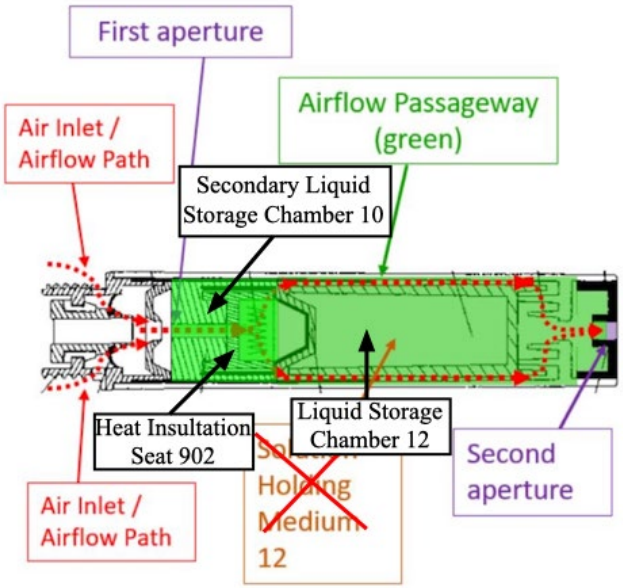

Dr. Sturges' Representation of the Zia Airflow Passageway on Page 74 of His Report. Corrected and Modified to Include the Secondary Liquid Storage Chamber 10 and Heat Insulation Seat 902.

180. A consistent application of the apparent identification logic used by Dr. Sturges results in the entire inner volume of the cartridge, downstream from the purported first aperture as being the airflow passageway. Not only is this certainly inconsistent with how a POSITA would understand an airflow passageway, it also

violates a basic patent analysis doctrine by eliminating any substantive meaning of "airflow passageway."

181. In fact, Xia specifically discloses an airflow passageway which is different from what Dr. Sturges identified above. As I explained above, Xia discloses that air enters its cartridge from two air inlets on the side of the cartridge, converges to the channel within the secondary liquid storage, passes the heating element, flows around the peripheral of the liquid storage chamber, and exits the cartridge from the right end. [Section V.A, *supra*] Importantly, Xia's airflow passageway does not consume the entire liquid storage chamber, but instead goes around the liquid storage chamber. [Xia at 7 ("a gap which is used as an airflow channel is left between the soft suction nozzle 13 and the liquid storage chamber 12.").] This airflow passageway is highlighted in green below.

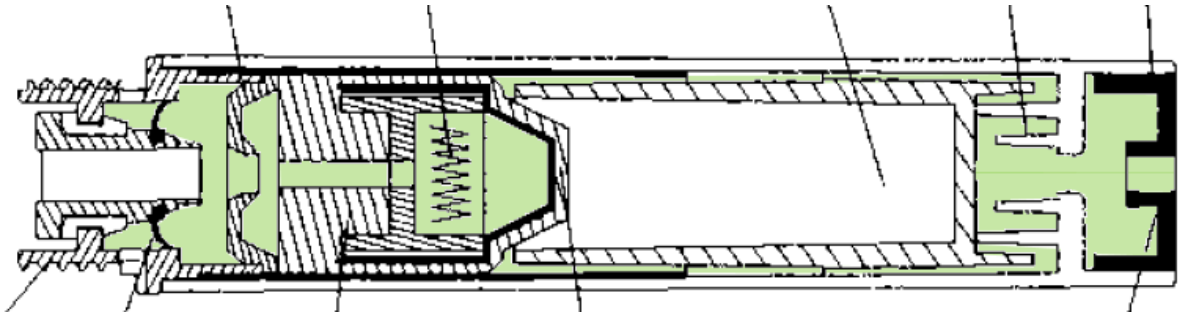

Xia, Fig. 2

182. As can be clearly seen below, this airflow passageway extends in several different directions that are not directed centrally or axially.

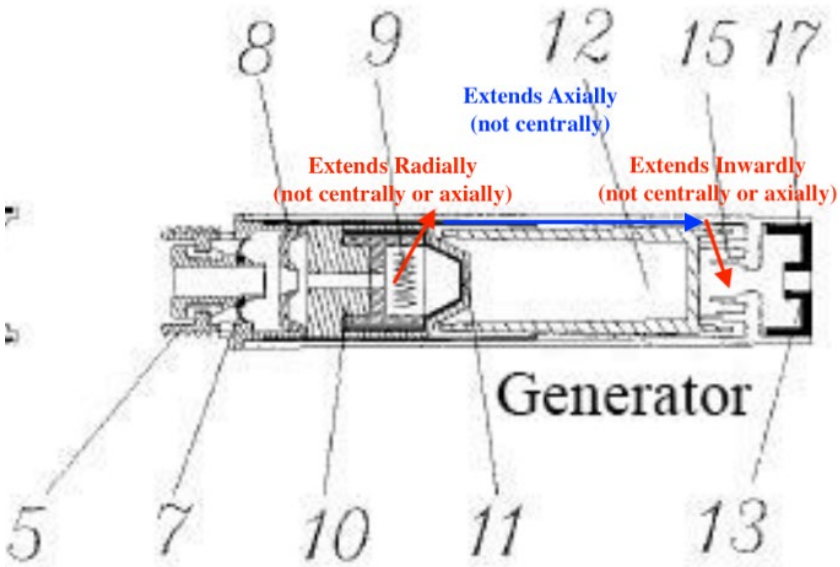

Xia at Fig. 2. Annotated to Show Airflow Directions.

183. A POSITA would not have just ignored Xia's explicit teaching of a specific airflow passageway, particularly because this airflow passageway design serves important functions – it reduces leakage and removes excess liquid from the airflow. For example, Xia teaches that after the airflow and liquid droplets are heated by the heating element, they travel in a manner that allows large droplets to be reabsorbed by the liquid-guiding mechanism. [Xia at 16.] Similarly, a POSITA would have understood that by confining airflow to a narrow gap (which Xia refers to as the "airflow channel") between the soft suction nozzle and the liquid storage chamber,

excessive liquid in the airflow may condense and be reabsorbed by the liquid storage chamber. [Xia at 13-14.] Furthermore, Xia teaches that the liquid blocking tank 15 and liquid blocking sealing cover 17 are also "used to prevent the chemical liquid from being sucked into the mouth." [Xia at 11.]

184. As a final note on this aspect of Dr. Sturges' analysis, I will also point out that his identification of the airflow passageway in Wang is also contradictory to the manner in which he identified the entire cross section of the cartridge in Xia. Below I have reproduced a figure from page 79 of Dr. Sturges' Declaration wherein he identifies the airflow passageway in Wang.

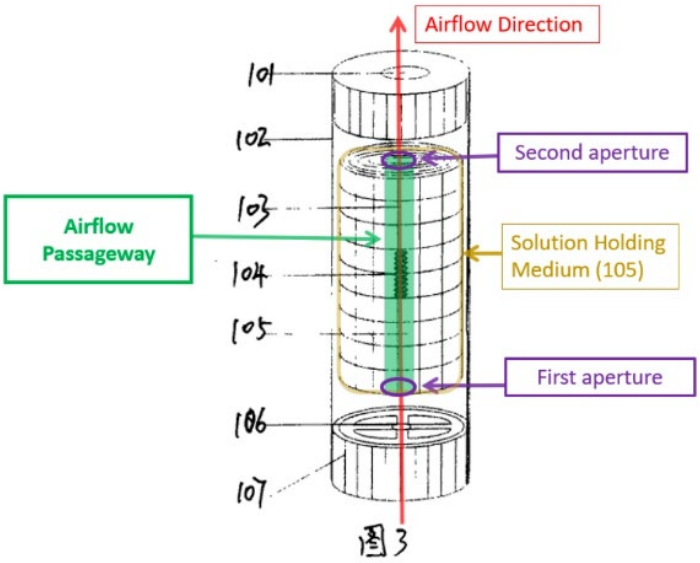

Dr. Sturges' Representation of the Wang Airflow Passageway on Page 79 of His Declaration.

185. In the above figure, Dr. Sturges has identified only a small cross sectional area as being the airflow passageway. This is very much a contradiction to the way he identified the airflow passageway in Xia. To be consistent with his method of airflow passageway identification, he would have needed to provide a diagram like one of those shown below, wherein the entire cross sectional area of Wang is identified as the purported airflow passageway. Dr. Sturges' logic for identifying the start of the passageway is not clear, so I have provided two options below.

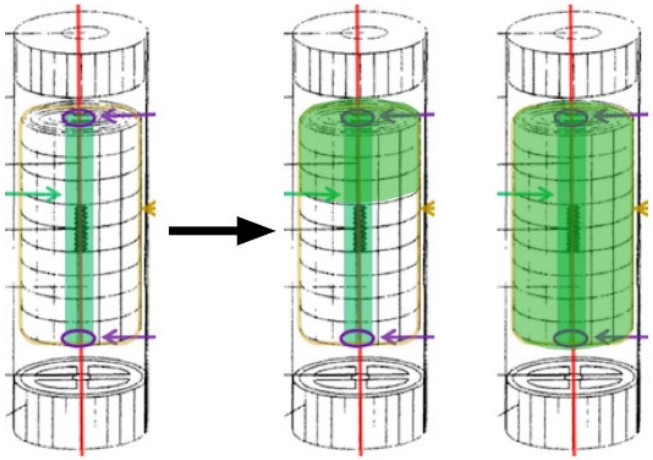

Identification of Purported Airflow Passages in Wang. Left: Dr. Sturges' Original. Right: Identifications More Consistent with Dr. Sturges' Xia Identification.

186. Given the above analysis, it is my opinion that Xia does not teach limitation [1.c]. To the extent Dr. Sturges is arguing that Xia, on its own, renders

obvious limitation [1.c], I also disagree with such a contention. Xia's operating principle is simply incompatible with the use of an airflow passageway extending centrally, as will be explained below in my analysis of the obviousness combinations suggested by Dr. Sturges.

4. Limitation [1.c] – Xia in View of Wang and/or Fang

187. To fix the airflow passageway problem with Xia, Dr. Sturges attempts to modify the structure of Xia with the "central" air passageways of Wang and/or Fang. While there are differences between the structures of Wang and Fang, Dr. Sturges attempts to use both of those prior art references to modify Xia to have a central airflow passageway. Therefore, I address both of the proposed combinations at the same time by first examining the fundamental problems that arise when a central airflow passageway is forced into the Xia system.

188. First, the proposed combinations using Wang and/or Fang result in a system that ejects hot large-diameter droplets of chemical liquid directly into the consumer's mouth. Second, the efficiency of the heating element and the vaporization process is greatly degraded to the extent that a POSITA would never use such a design. Third, essential components that perform critical functions are removed. Fourth, the proposed modifications reduce the storage capacity of the liquid storage chamber.

Firth, the proposed modifications disable the heater control system. Sixth, the proposed modifications disable the liquid-guiding mechanism.

a. Large-Diameter Droplets Ejected into the User's Mouth

189. When the radial and lateral airflow passageway of Xia is replaced with a central airflow passageway, Dr. Sturges represents the combinations as looking like the following structure. [Dr. Sturges 881 Declaration, page 86.]

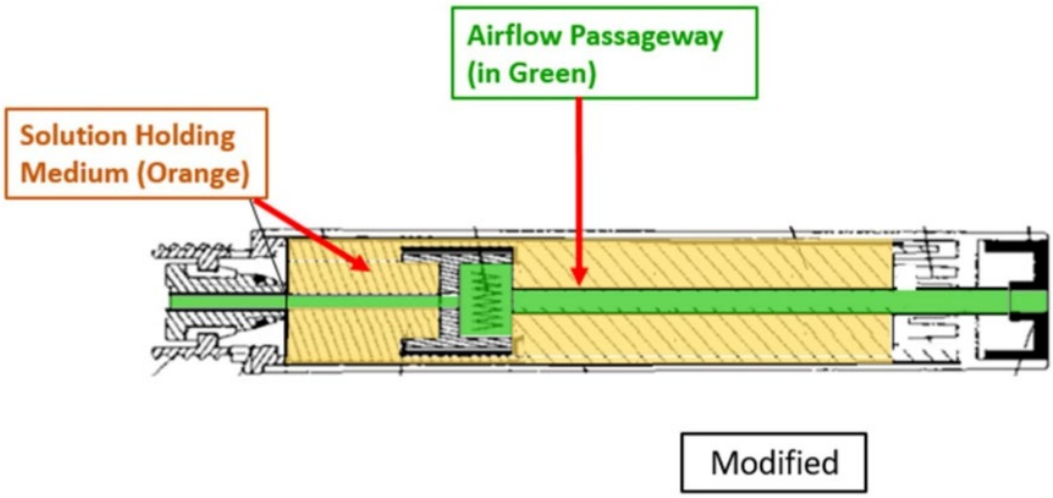

Dr. Sturges' Xia Modified with Wang (Similar structure for Fang modification)

190. Recall, that unmodified Xia has an air and droplet flow as illustrated below. A critical aspect of the design is that the hot large-diameter droplets of chemical liquid get attached to a wall and are reabsorbed by the liquid-guiding mechanism.

Xia Figure 4. Zoomed and Annotated to Show Air Flow and Droplets.

191. Given the design modification proposed by Dr. Sturges, there is no wall to stop and collect the hot large-diameter droplets. Those large-diameter droplets are not captured and reabsorbed, rather they are sent straight into the user's mouth, as shown below.

Sturges Page 86 Figure Annotated to Show Large Chemical Droplets Going into the User's Mouth.

192. Given that the proposed design presented by Dr. Sturges eliminates the ability of the design to trap and reabsorb large-diameter droplets, it renders Xia

NJOY Exhibit 2022.120
Juul v. NJOY
IPR2024-00161

inoperable for its intended purpose, which is to deliver palatable aerosol to the consumer. As a result, a POSITA would never choose to use such a structure. Therefore, it would not be an obvious modification.

193. Additionally, a POSITA would not have an expectation of success with such a modified design. Rather, they would have an expectation of failure. Given that the proposed device would eject hot large-diameter chemical droplets into the consumer's mouth, a POSITA would expect that the product would be both a commercial failure and also a defective product that would result in product liability lawsuits.

b. Degraded Vaporization Process

194. The second flaw in Dr. Sturges' proposed combination is that it greatly reduces the efficiency of the vaporization (atomization) process. As an initial matter, it is important to realize that the efficiency of hand-held consumer electronics is always of very high concern to a POSITA. If the battery depletes rapidly, then the product is likely to stop functioning at a high rate and require the user to continually recharge the device. This is known to be one of the most aggravating aspects of hand-held electronic devices.

195. The inefficiency of the proposed design modification is a result of the modified airflow path. Recall that in the unmodified Xia design, "airflow flows **all around** the heating element." [Sturges Report, ¶ 150 (emphasis added).] The airflow path passing all around the heater is shown below.

Xia Figure 4. Zoomed and Annotated to Show Air Flow and Droplets.

196. By passing air over all of the heating element, the heater is used efficiently to create vapor. A POSITA would know that to heat up the liquid droplets, the airflow path carrying the droplets would need to pass over the heating element. Furthermore, the longer that the airflow and droplets are near the heating element, the more efficient and effective the heating process will be. Therefore, the Xia structure that diverts the airflow path to turn sideways and flow along the transverse heating element would be immediately recognizable to a POSITA as an efficient and effective design for transferring heat from the heating element to the airflow and droplets.

197. Now consider the airflow path in Dr. Sturges' modified design. As illustrated below, the airflow path and droplets pass straight through the heater and do not flow over all parts of the heating element.

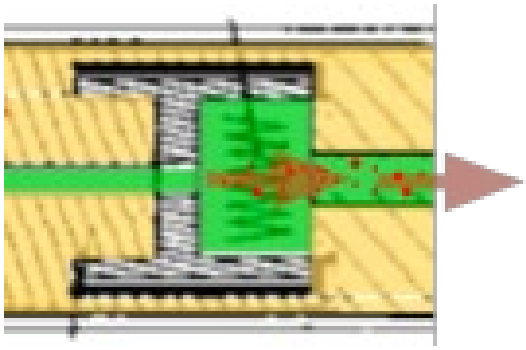

Dr. Sturges Page 86 Figure Zoomed and Annotated to Show Inefficient Airflow Path.

198. Note that a POSITA would know from their introductory fluids class that airflow through such a cavity would produce only a small amount of flow into the top and bottom of the cavity. Essentially, most of the cavity would be stagnant and there would not be a good transfer of the heat from the top and bottom portions of the heating element. The stagnant nature of the air flow can be visualized by plotting the velocity of the air in the various parts of the cavity. The annotated figure below comes from a paper (Zhang) written on the flow of fluid near, and into, transverse cavities. [7] The

[7] Zhang W, Frakes DH, Babiker H, Chao S-h, Youngbull C, Johnson RH, Meldrum DR. Simulation and Experimental Characterization of Microscopically Accessible

figure shows the flow patterns into lateral cavities of different sizes and shapes. The rectangular cavity on the right side of the figure is very similar to the top half of the cavity proposed by Dr. Sturges because the fluid flow path is shown as being along the bottom of the rectangle.

Stream Traces in Fluid Cavities. [8] Annotated.

199. The paper shows the magnitude of the fluid velocities within the cavities using the color maps reproduced below. Blue is used for slow or stagnant flow, while red indicates higher velocity flow. It is readily apparent that the top portion of the rectangular cavity is stagnant.

Hydrodynamic Microvortices. *Micromachines*. 2012; 3(2):529-541. https://doi.org/10.3390/mi3020529.

[8] Zhang W, Frakes DH, Babiker H, Chao S-h, Youngbull C, Johnson RH, Meldrum DR. Simulation and Experimental Characterization of Microscopically Accessible Hydrodynamic Microvortices. *Micromachines*. 2012; 3(2):529-541. https://doi.org/10.3390/mi3020529.

Fluid Velocity Contours in Fluid Cavities. [9]

200. Numerous other papers present similar velocity diagrams. For example, another paper[10] (Vilkinis) studied fluid flow through rectangular cavities of various sizes. A portion of Vilkinis Figure 1 showing various rectangular cavities is reproduced below.

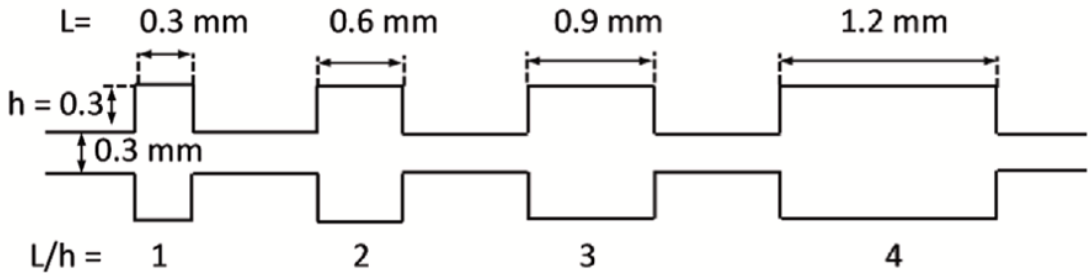

[9] Zhang W, Frakes DH, Babiker H, Chao S-h, Youngbull C, Johnson RH, Meldrum DR. Simulation and Experimental Characterization of Microscopically Accessible Hydrodynamic Microvortices. Micromachines. 2012; 3(2):529-541. https://doi.org/10.3390/mi3020529

[10] P. Vilkinis, J. Šereika, G. Skarbalius, A. Džiugys, and N. Pedišius, "Experimental analysis of flow topology and particle behavior in microcavities," *Experimental Thermal and Fluid Science,* vol. 150, p. 111046, 2024/01/01/ 2024, doi: https://doi.org/10.1016/j.expthermflusci.2023.111046.

Vilkinis Figure 1. Cropped.

201. The paper shows significant stagnation in the rectangular cavities, for example in Figure 3, which is reproduced in part below.

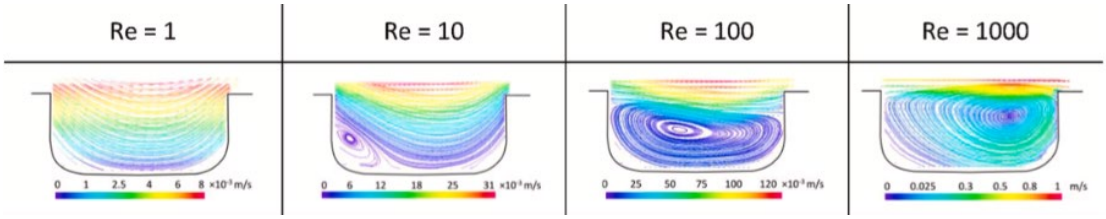

Vilkinis Figure 3. Cropped.

202. A more complete view of the flow in the cavity suggested by Dr. Sturges can be formed by combining the above fluid velocity diagrams from Zhang for a single lateral cavity with a mirror image to show the entire cavity proposed by Dr. Sturges. Such a combined flow pattern is illustrated below.

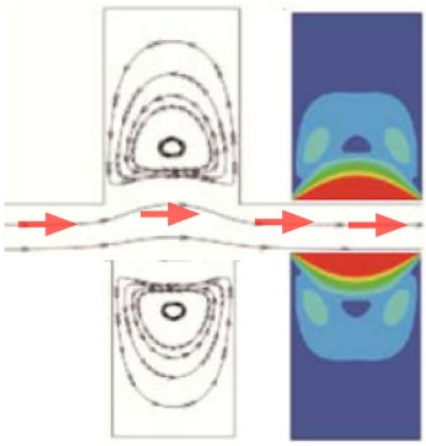

Fluid Flow Through the Center of a Rectangular Cavity. (Modified from Zhang)

203. While a POSITA would not know the exact fluid velocity distributions, as shown above, a POSITA would certainly know that the transverse heating element and cavity proposed by Dr. Sturges, with a straight-through air flow path, would result in stagnant airflow in the upper and lower regions of the rectangular cavity. A POSITA would also know that stagnant flow would result in inefficient heat transfer from the heating element to the airflow path and the suspended droplets. These inefficient volumes are illustrated below.

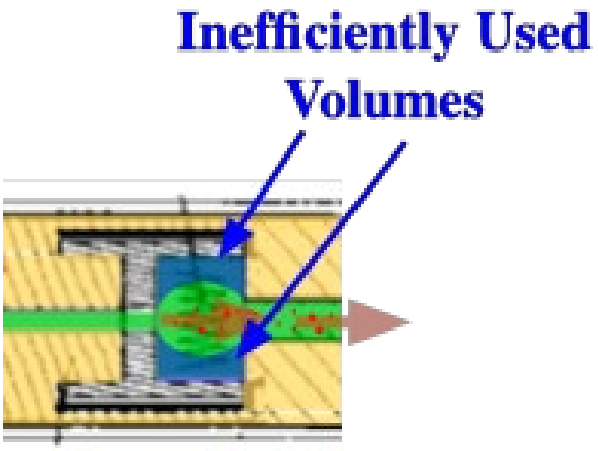

Inefficient Heater Volumes in Dr. Sturges' Proposed Design.

c. Elimination of Leakage Protection

204. A third flaw with the proposed modifications is that they eliminate leakage protection, such as the function performed by the liquid blocking tank 15, shown below.

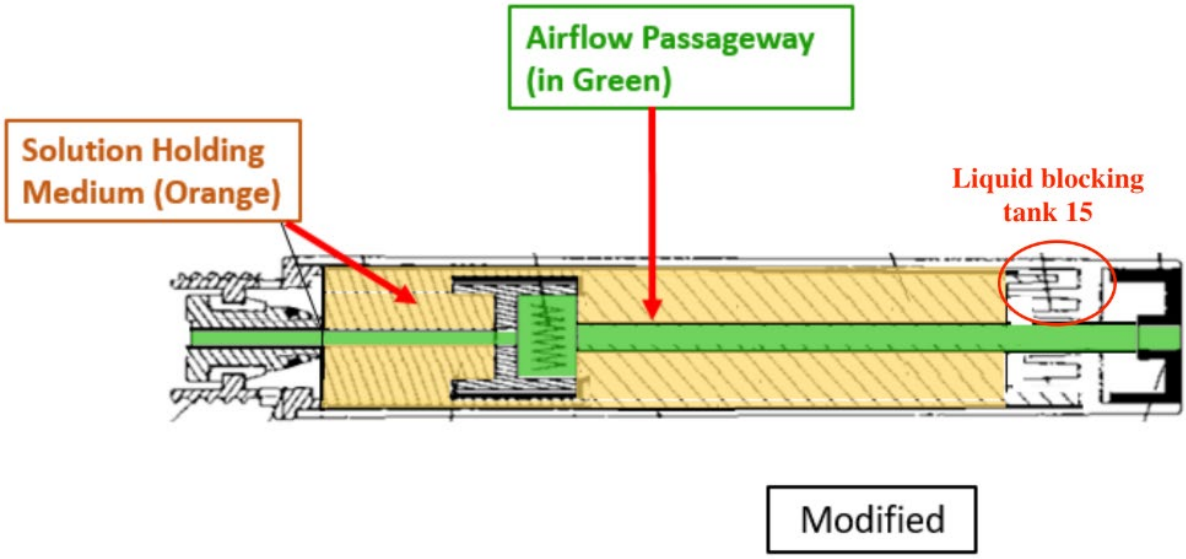

The Proposed Modifications Eliminate the Function of the Liquid Blocking Tank.

205. Given that the airflow passageway goes through the center of the device, the liquid blocking tank 15 no longer functions. The stated purpose of the liquid blocking tank is to prevent liquid from being sucked into the mouth:

> …the soft suction nozzle 13 is arranged on a right end face of the generator, its soft silica gel has a good mouth feeling and may be chewed lightly, and the liquid blocking tank 15 made of soft silica gel to prevent the liquid from being sucked into the mouth is further arranged on the inner side of the soft suction nozzle 13. [Xia, page 8.]

206. Given that the proposed modification eliminates the liquid blocking tank function, the proposed modification would lead to a device wherein liquid gets sucked into the user's mouth.

d. Loss of Liquid Storage Capacity

207. A fourth flaw with the proposed modifications that forces a central airflow passageway into the Xia design is the loss of liquid storage capacity. I note that Dr. Sturges attempted to address the liquid storage capacity change by stating that his proposed modification would "allow the solution holding medium to be extended to the edge of the housing," thereby "increasing liquid storage capacity." [Sturges 881 Declaration, ¶ 89.]

208. Although Dr. Sturges offers the opinion that his proposed modification would increase liquid storage capacity, he does not offer a substantive justification other than indicating his modification would allow the solution holding medium to extend to the edge of the housing. That possible extension is clearly offset by a loss of storage volume in the center of the liquid storage tank, wherein the central air passageway has been inserted. A proper examination of this suggested design modification must examine that trade-off. Dr. Sturges did not perform any such trade-off analysis.

209. A POSITA would know how to perform the required trade-off analysis. The analysis is performed by simply calculating the liquid storage capacity both before and after the suggested modification. The storage volume before the modification can be estimated using the formula for the volume of a cylinder because the unmodified Xia liquid storage chamber is approximately a cylinder, as shown below. [See for example, "The liquid storage chamber 12 is a cylindrical object with one open end." Xia, page 8.]

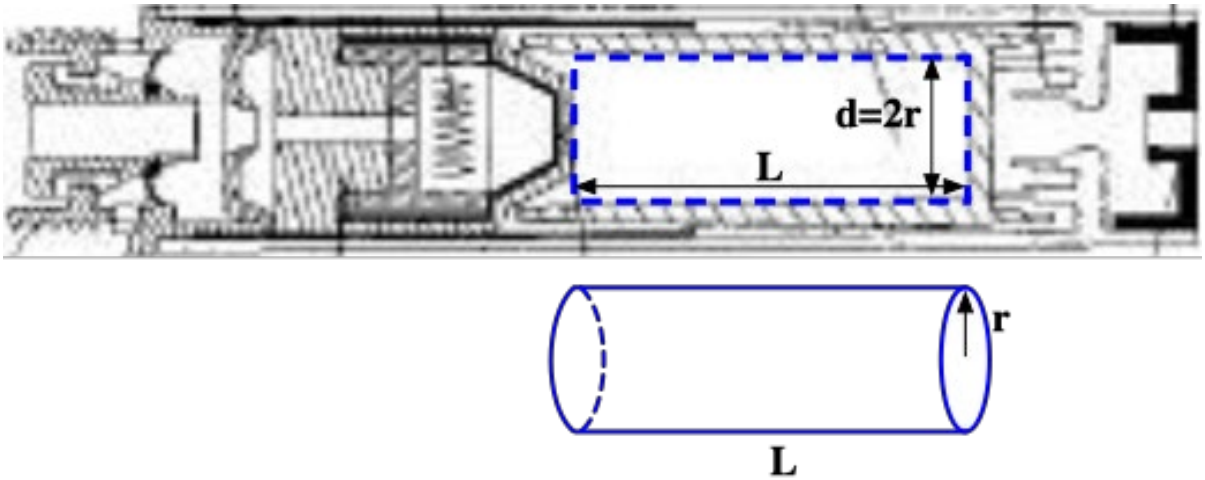

Xia's Cylindrical Liquid Storage Chamber.

210. The volume of a cylinder of length, L, and radius, r, is:

$$Vol = L\pi r^2$$

211. Note that the length and radius dimensions are measurements of the internal volume of space, so as to reflect the storage capacity. The modified liquid

storage tank proposed by Dr. Sturges is an annular cylinder – with a hollow tube down the middle, as shown below.

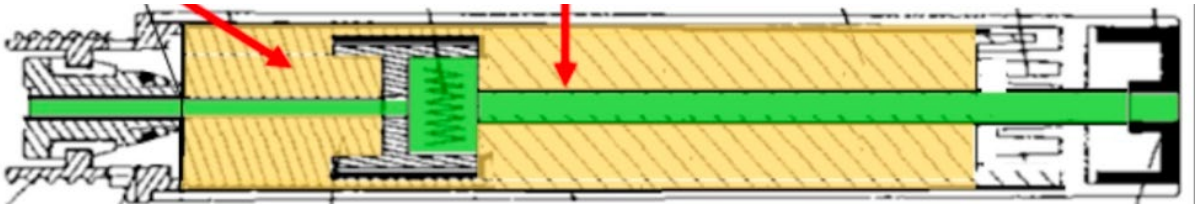

Dr. Sturges' Proposed Modification [Sturges 881 Decl. ¶ 107.]

212. I note that in Dr. Sturges' illustration of his proposed modification he has completely eliminated the liquid-guiding mechanism 11 that moves liquid from the liquid storage chamber 12 (under consideration) to the secondary liquid storage chamber 10 that emits droplets into the airflow before the heater. I do not see any justification for removing that element. Furthermore, his illustration does not show the inner walls of the storage chamber. Therefore, below I have provided a more realistic representation of Dr. Sturges' proposed combination with the central airflow passageway integrated, but with the other essential elements preserved, as well as the walls of the modified storage chamber.

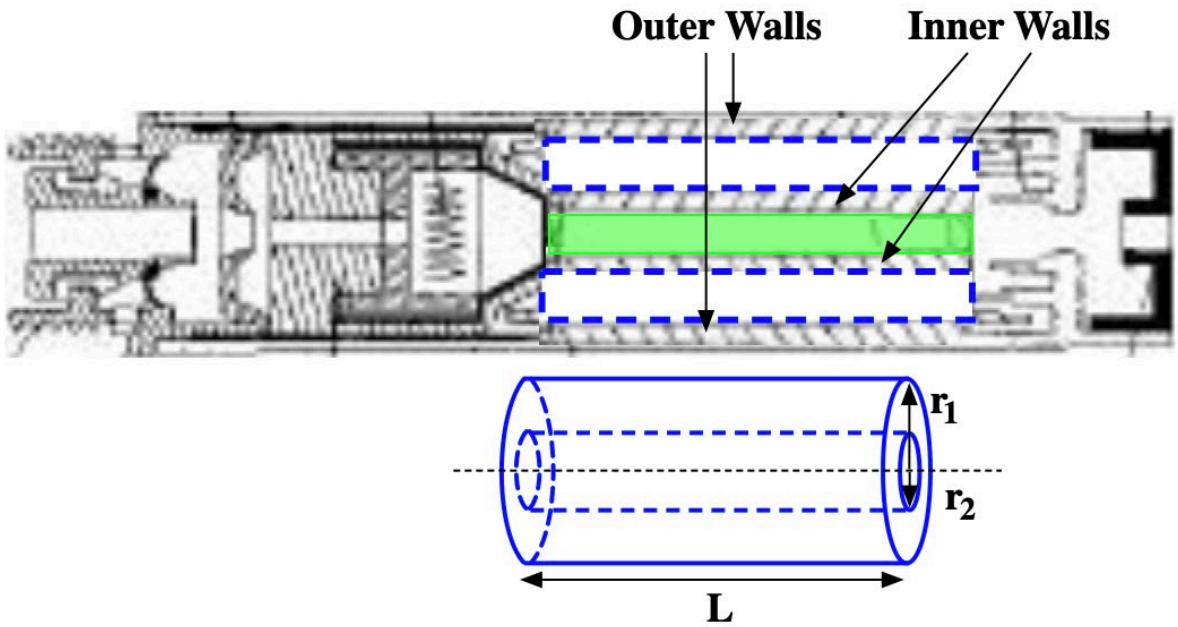

Proposed Combination with Essential Elements Preserved and Walls Illustrated.

213. As illustrated above, the annular cylindrical storage chamber has an outer radius, r_1, that extends from its center to the interior surface of its outer walls. It also has an inner radius, r_2, that extends from its center to the outer surface of its inner walls. Those two radii can be used to determine the storage volume with the formula for the volume of an annular cylinder:

$$Vol_{AC} = L\pi(r_1^2 - r_2^2)$$

214. Note that the inner radius, r_2, can significantly reduce the storage volume in an annular cylinder. This is especially true when we consider that the inner radius is not just a function of the desired airflow passage size, it also includes the inner wall

thickness. Given that the value of r_1 increases only slightly in Dr. Sturges' proposed design, but the value of r_2 can be quite large, Dr. Sturges' suggestion that the storage capacity would increase is not justified.

e. Disablement of the Heater Control System

215. A fifth flaw with Dr. Sturges' proposed modifications is that they disable the heater control system. Recall that Xia uses "*the action of suction by the smoker*" to cause the *"the vibrating diaphragm 7"* and the *"the electret microphone 4"* to vibrate. These vibrations are *"converted into a switching signal through a controller IC1 (see Fig. 6) on the integrated circuit board."* [Xia, Page 5.] Xia then uses the switching signals to turn on and off the heater. The heater control circuitry is shown in Xia Figure 6, which has been reproduced below for convenience.

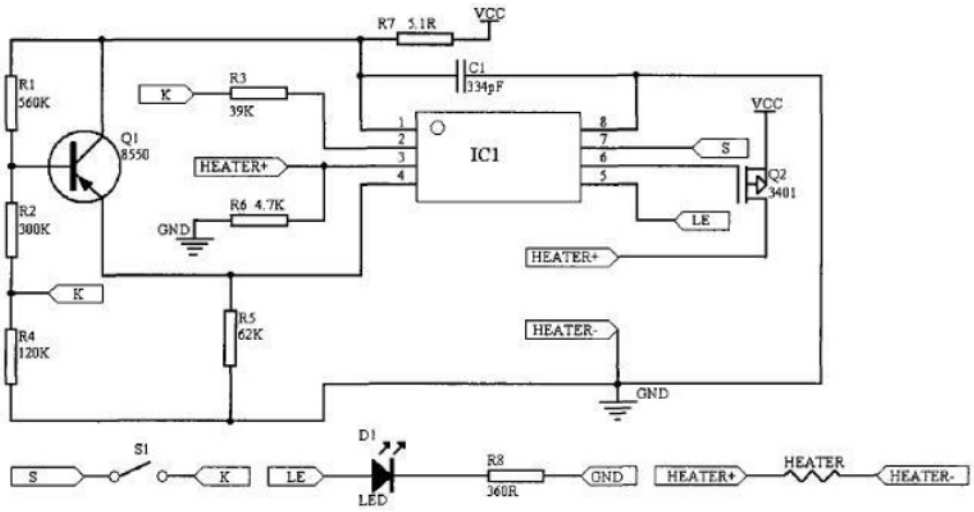

Xia Figure 6 Showing a Schematic Diagram of a Circuit That Controls the Heater.

216. To make way for a central airflow passageway in Xia, Dr. Sturges was forced to remove and/or reposition essential components used in the heater control system. Dr. Sturges admits to these modifications and provides illustrations as to how he thinks a POSITA would achieve the proposed combination. First, Dr. Sturges presents a diagram to explain how the original, unmodified Xia uses the airflow to vibrate the diaphragms 7 that help trigger the heater. This diagram is shown below on the left. Dr. Sturges then presents his suggested modification that remove the vibrating diaphragms and redirects the airflow down the center of the modified Xia cartridge. His diagram of this proposed modification is shown below on the right.

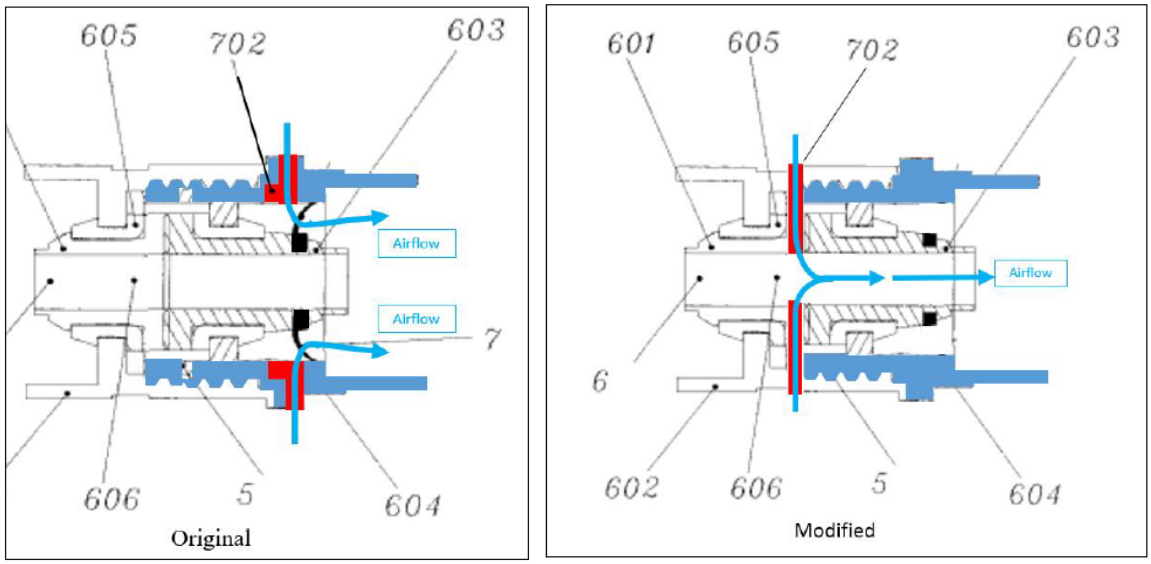

Dr. Sturges' Figures Showing Proposed Modifications that Remove the Vibrating Diaphragms. [Sturges 881 Declaration ¶ 91.]

217. I note that this is a fundamental change to the operating principle of Xia. In an attempt to justify this wholesale modification, Dr. Sturges makes various suggestions regarding how the vibrating diaphragms can be replaced with "pressure sensors as in Fang and Wang," or how a POSITA might modify "the microphone 4 of Xia to use one that is more sensitive to pressure changes." [Sturges 881 Declaration ¶¶ 93-95.]

218. While Dr. Sturges does provide general suggestions for swapping out components, he fails to fix the problems his modifications create. For example, he does not explain how the control circuitry shown above in Xia Figure 6 would be redesigned to use even one of his proposed substitutions. There is a very good reason that Dr. Sturges did not provide a complete solution to the problems generated by his proposed modifications – making his proposed modifications workable, in regards to the heater control system, would require undue experimentation. Therefore, it is my opinion that the proposed modifications would not have been obvious to a POSITA at the time of the invention.

f. Degradation of the Liquid-Guiding Mechanism

219. A sixth flaw in Dr. Sturges' proposed modifications is that they significantly degrade the liquid-guiding mechanism in Xia. Xia explains that "chemical liquid flows from the liquid storage chamber 12 into the secondary liquid storage chamber 10 through the liquid-guiding mechanism 11." [Xia, page 5.] The position of liquid-guiding mechanism 11 between the two liquid storage chambers is shown below in the cropped version of Figure 2. The mechanism acts to both transfer liquid from one storage chamber to another and also prevent leakage from the liquid storage chamber.

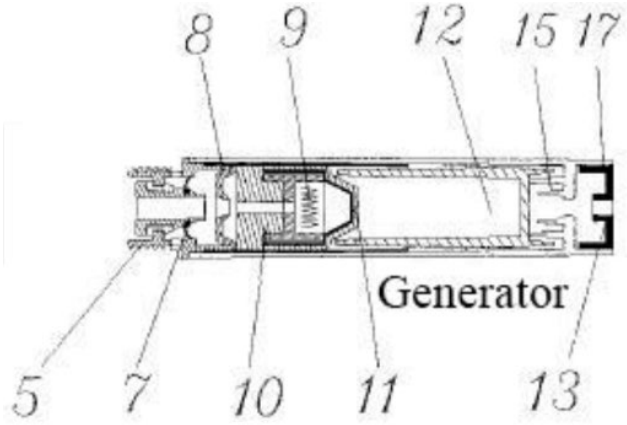

Xia Figure 2. Cropped to Focus on the Generator Structure.

220. The liquid storage chamber 12 is a cylinder with one open end. Without a structure to prevent uncontrolled liquid loss from the open end, the device would have a leakage problem. The leakage-prevention aspect of the liquid-guiding mechanism is revealed in the following passage:

The liquid storage chamber 12 is a cylindrical object with one end open, medicinal cotton fibers are placed in the middle, and then the raw chemical liquid is charged in. Through a capillary action of the liquid-guiding mechanism 11, the chemical liquid stored in the liquid storage chamber 12 is guided into the secondary liquid storage chamber 10." [Xia, page 8.]

221. The detailed structure of the liquid-guiding mechanism is described as:

The liquid-guiding mechanism 11 is composed of a support frame 1101 and a liquid guiding body 1102. The support frame 1101 of the liquid-guiding mechanism plays a role in fixing. The liquid guiding body 1102 is made of a multi-layer foam nickel mesh or other metal porous bodies. The liquid guiding body 1102 may also be made of stainless steel fiber felt, polymer foam and ceramic foam. [Xia, page 8.]

222. In addition to transferring chemical liquid in a controlled manner to the secondary liquid storage chamber, Xia explains that "large-diameter droplets after atomization are attached to a wall under the action of a vortex to be reabsorbed by the liquid-guiding mechanism." That is, the liquid-guiding mechanism performs the

critical role of reabsorbing large-diameter droplets so that they are not emitted into the users' mouth.

223. To make way for a central airflow passageway in Xia, Dr. Sturges was forced to remove this liquid-guiding mechanism, as shown below in Dr. Sturges' figure from page 92 of his Declaration. Without the liquid-guiding mechanism, the chemical liquid would flow uncontrolled from the liquid storage chamber 12 into the secondary liquid storage chamber 10. Additionally, there would be no structure to trap and reabsorb large-diameter droplets.

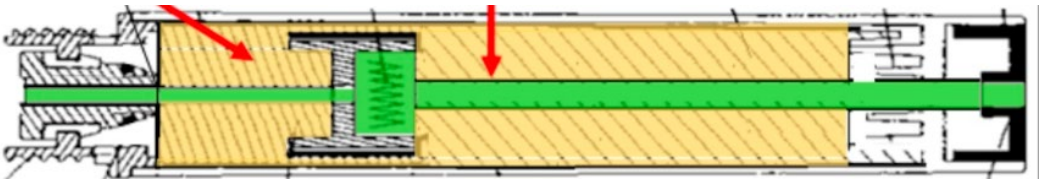

Dr. Sturges' Proposed Modification [Sturges 881 Declaration ¶ 107.]

g. Summary of Combination Defects

224. The above problems with Dr. Sturges' proposed design are fatal to any obviousness analysis that attempts to modify Xia to have a central airflow passageway because they result in: i) essential functions of the device being completely eliminated, such as the large-droplet capturing function, or ii) greatly degraded functioning, as in the heating efficiency defect. Furthermore, the above described issues completely eliminate the expectation of success and replace it with an expectation of abject failure.

225. Given that all of the Xia-based obviousness arguments suffer from the flaws discussed above, it is my opinion that all of the Xia-based grounds of obviousness are defective and unconvincing.

5. Limitations [1.b1], [1.f], [1.g] – Xia

226. Claim 1 recites "a cartridge having a housing that comprises an interior, ([1.b1])…wherein the housing includes a solution holding medium adapted to hold a solution in the interior of the housing ([1.f]),…wherein the housing includes a heating element located in the interior of the housing ([1.g])…" In my opinion, Juul and Dr. Sturges have failed to show that Xia teaches or renders obvious this limitation.

227. It is clear that the plain language of this claim requires a cartridge having a housing that includes a solution holding medium ***and*** a heating element located in the interior of the housing. In other words, the claim requires a single cartridge comprising a single housing for both a solution holding medium and a heating element. As I explained above, Xia discloses a three-piece e-cigarette having two separate cartridges for the atomizer and the liquid storage chamber. [Section V.A.1, *supra*.] Xia's atomizer cartridge and liquid cartridge have separate housings – the atomizer has a stainless steel housing and the liquid cartridge has a polypropylene PP housing. [*Id.*;

Xia at 7, 13.] Therefore, Xia does not disclose a single cartridge comprising a single housing having both the heating element and the solution holding medium.

228. I note that the specification of the 881 Patent describes both a two-piece design using a cartomizer and a three-piece e-cigarette design using separate cartridges for heating element and solution holding medium. As shown below, Figure 1 of the specification depicts a two-piece design and Figure 4 depicts a three-piece design.

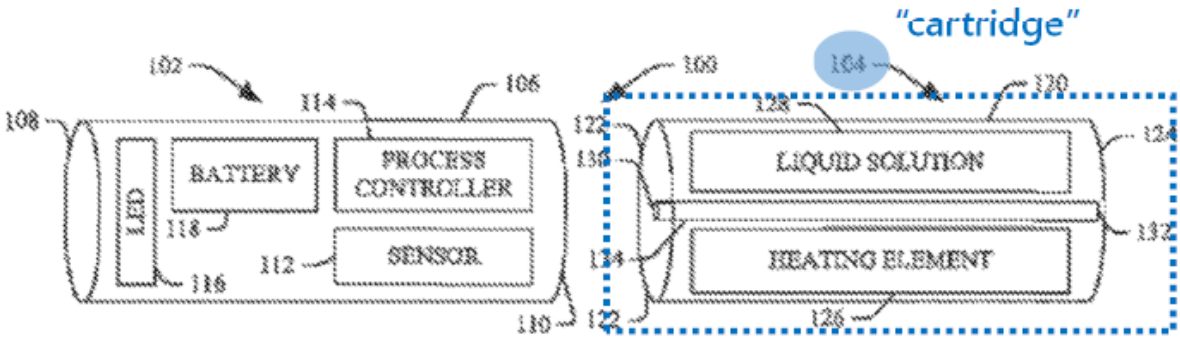

881 Patent at Fig. 1

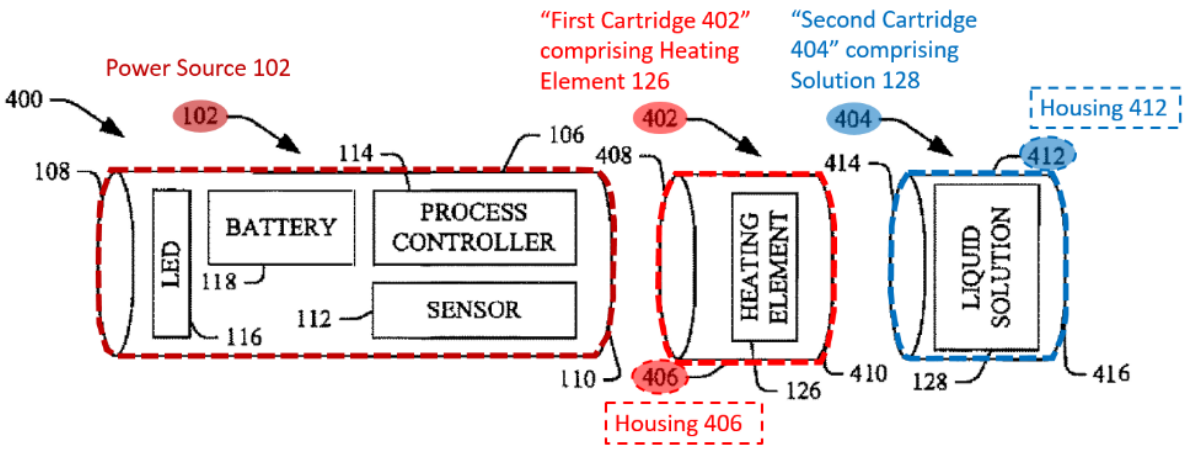

881 Patent at Figs. 4

229. The specification explicitly distinguishes between these two designs. With respect to the three-piece design, the specification states that the e-cigarette comprises "three separate portions: 1) the power source 102; 2) a first cartridge 402 that comprises the heating element 126; and 3) a second cartridge 404 (a mouthpiece cartridge) that comprises the solution 128." [*Id.*, 8:24-30.] The specification further teaches that in the three-piece design, the first cartridge 402 and the second cartridge 404 have separate housings 406 and 412, which are made of different materials. [*Id.*, 8:32-35 ("The first cartridge 402 can comprise a housing 406 that is cylindrical in nature, wherein the housing 406 can be constructed from a non-metallic material such as a polymer or ceramic."); 8:47-49 ("The second cartridge 404 comprises a housing 412, wherein the housing 412 can be constructed of a pliable plastic material.").] With

respect to the two-piece design, the specification refers to the cartridge as a single "cartridge 104." [881 Patent, 2:60-61.]

230. It is my opinion that a POSITA would understand the challenged claims to only be directed to the two-piece design. As explained above, claim 1 requires a single cartridge comprising a housing having both the solution holding medium and the heating element. It would have been clear to a POSITA that the three-piece design described in the specification, which comprises separate cartridges having separate housings for the solution holding medium and the heating element, is not covered by the claim.

231. As I explained above, Xia is a three-piece design having a disposable liquid cartridge and a separate atomizer cartridge. [Section V.A.1, *supra*.] Accordingly, Xia does not disclose or render obvious "a housing having an interior and a solution holding medium adapted to hold a solution…a heating element located in the interior of the housing."

232. Dr. Sturges and Juul do not argue that it would have been obvious to redesign Xia by combining its liquid cartridge and atomizer cartridge to have a single housing. In any event, a POSITA would not have been motivated to do so because

doing so requires replacing the atomizer, which is an expensive component, more frequently than necessary.

233. A POSITA would have understood that the atomizer cartridge of Xia is relatively expensive to manufacture because it includes a large number of mechanical and electrical components, including the heater, vibrating diaphragm 7, liquid-blocking plate 8, secondary liquid storage chamber 10, and liquid guiding mechanism 11. [Section V.A, *supra*; Xia at 9, Figs. 1, 3, 4.] In comparison, Xia's liquid cartridge is cheaper to manufacture because it contains relatively fewer and less complex mechanical components. [*See* Section V.A, *supra* (explaining that Xia's liquid cartridge comprises a soft suction nozzle, liquid storage chamber, liquid blocking tank, and silica sealing cover.)] As such, replacing the atomizer components each time the vaporizable liquid is depleted would greatly increase the cost for consumers.

234. Moreover, a POSITA would understand that the usable life of the atomizer is much longer than a liquid storage chamber. This is confirmed by the large number of e-cigarettes having disposable liquid cartridges and reusable atomizers, such as NPRO and Han. [*See* Section V.A.1, *supra.*] Therefore, it would have been wasteful and uneconomical to replace the atomizer each time the liquid depletes.

235. It is also my opinion that Xia in combination with Wang and/or Fang does not render obvious this limitation for the same reasons as I explained in Section VI.A.4.

6. Lack of Motivation to Combine Xia with Wang and/or Fang

236. Dr. Sturges puts forth arguments on motivation to combine Xia with Wang and/or Fang. However, as shown above, there are fatal problems with the proposed combinations that would keep a POSITA from pursuing the proposed combination of Xia with a centrally extending airflow passageway from Wang and/or Fang. These problems include: i) emitting hot large-sized droplets into the consumer's mouth, ii) severe degradation of the heating process efficiency, iii) elimination of essential and critical functions, iv) reduced storage capacity of the liquid storage chamber, v) disablement of the heater control system, and vi) disablement of the liquid-guiding mechanism. [*See* Sections VI.A.2, 4-5, *supra*.]

237. Given the numerous problems with the proposed combinations, it is my opinion that there is a lack of motivation to combine the references as proposed.

7. No Expectation of Success in Combining Xia with Wang and/or Fang

238. Dr. Sturges puts forth arguments that a POSITA would expect success in combining Xia with Wang and/or Fang. The proposed combination brings together

concepts that are not compatible for at least the reason that the large-droplet capturing and reabsorbing system of Xia is replaced with a straight-line airflow passageway from the heater into the consumer's mouth. A POSITA would expect this design to annoy and possibly injure the consumer. The other issues discussed above give a POSITA additional expectations of failures, or at least greatly reduced performance of the Xia invention. [*See* Sections VI.A.2, 4-5, *supra*.] Therefore, the fatal problems with the proposed combinations would not provide an expectation of success, rather a POSITA would expect failure in pursuing the proposed combination.

B. Claims 2-7

239. Claims 2-7 depend from claim 1. Therefore, it is my opinion, Xia on its own, or combined with Wang and/or Fang, does not render obvious claims 2-7 for at least the same reasons provided above explaining why claim 1 is not rendered obvious.

240. However, there are additional reasons that Dr. Sturges' analysis does not render claims 2, 3, and 7 obvious. I address these additional reasons in the next subsections.

1. Claim 2 – Additional Issues

241. Claim 2 requires "The cartridge of claim 1, wherein the heating element is a coil having a maximum diameter, the airflow passageway having a length having

NJOY Exhibit 2022.145
Juul v. NJOY
IPR2024-00161

a circular cross section having a diameter along a majority of the length, the maximum diameter of the coil being smaller than the diameter of the circular cross section of the length of the airflow passageway."

242. As explained above, Dr. Sturges' identification of Xia's airflow passageway is incorrect. As shown below, correctly identified, the airflow passageway in Xia does not have a circular cross section along a majority of its length. In fact, the airflow passageway in Xia has an annular (ring-shaped) cross section along the majority of its length. Therefore, Xia does not teach claim 2 for this additional reason.

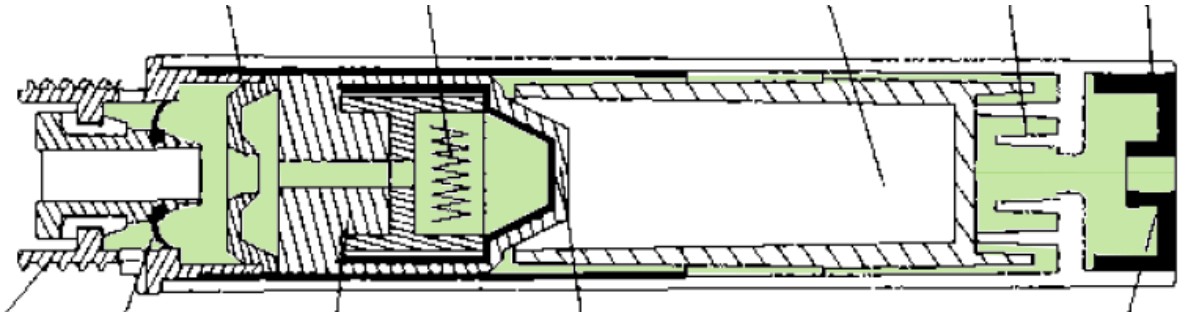

Xia, Fig. 2 (correct airflow passageway highlighted in green)

2. Claim 3 – Additional Issues

243. Claim 3 requires "The cartridge of claim 2, wherein the first aperture on the first end is located centrally and axially with respect to the housing, the first aperture having a cross-sectional area measured perpendicular to a central longitudinal axis of the housing, the interior of the airflow passageway between the heating element

and the second aperture being no smaller in cross-sectional area than the cross-sectional area of the first aperture."

244. As I explained above, Dr. Sturges' identification airflow passageway in Xia is incorrect. Correctly identified, Xia's airflow passageway comprises a portion between the heating element and the second aperture that has a smaller cross sectional area than the first aperture. Specifically, Xia discloses that air leaves the heater 9 from "overflow holes 903." [Xia at 12-13 ("[T]he liquid is instantly atomized, then flows out of the heater 9 from the overflow holes 903 . . . .").] Therefore, a POSITA would have understood the overflow holes 903 to be part of the airflow passageway between the heater and the air outlet.

245. As shown below, the overflow holes have a smaller cross-sectional area than the alleged first aperture. I placed a red line at the alleged first aperture to represent its diameter. I then copy-pasted and rotated the same red line onto the overflow hole. It is clear that the red line is longer than the diameter of the overflow holes.

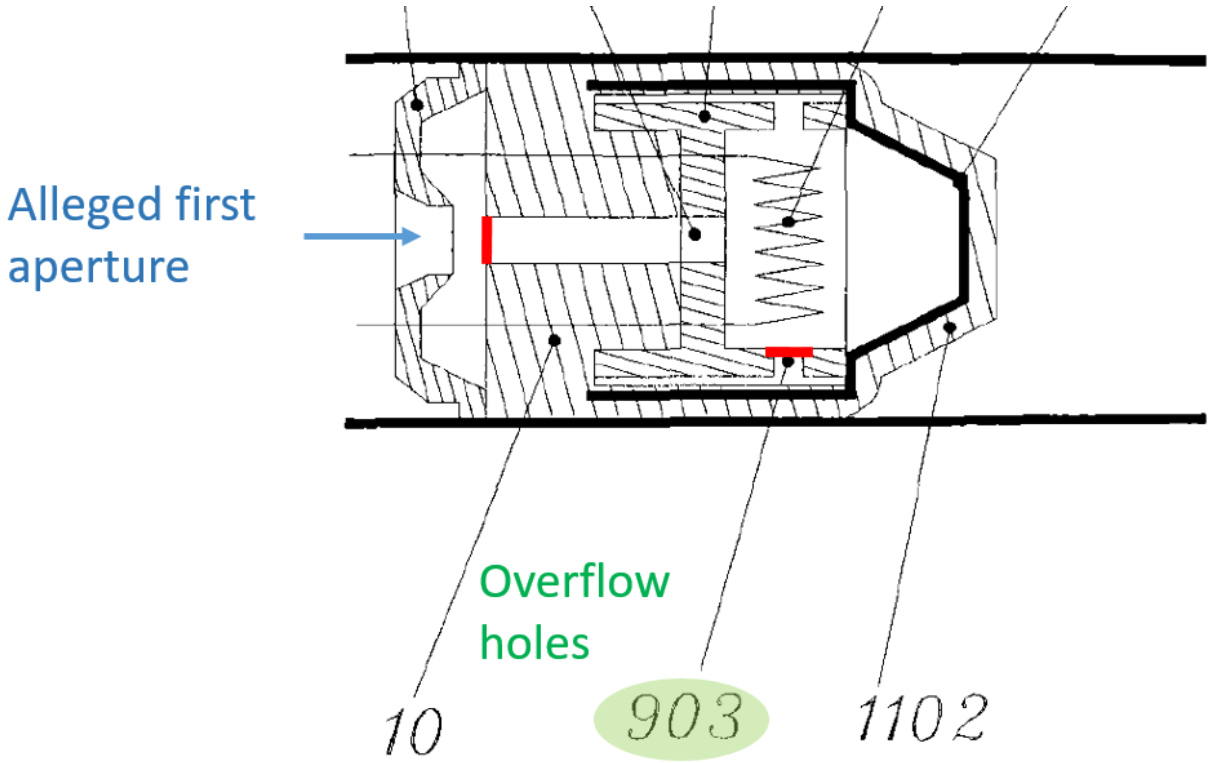

Xia at Fig. 4. Annotated.

246. Accordingly, it is my opinion that Xia does not teach or render obvious this claim.

3. Claim 7 – Additional Issues

247. Claim 7 requires "The cartridge of claim 1, wherein the airflow passageway has a uniform cross-sectional area measured perpendicular to a central longitudinal axis of the housing between the heating element and the second aperture."

248. As I explained above, Dr. Sturges' identification airflow passageway in Xia is incorrect. Correctly identified, Xia's airflow passageway does not have a

uniform cross-sectional area measured perpendicular to a central longitudinal axis of the housing between the heating element and the second aperture. As shown below, the correct airflow passageway between the heating element and the second aperture comprises a slightly tapered annular channel, an extensively zig-zagged portion, a narrow neck portion, and a wider portion adjacent to the second aperture. This airflow passageway is clearly not uniform.

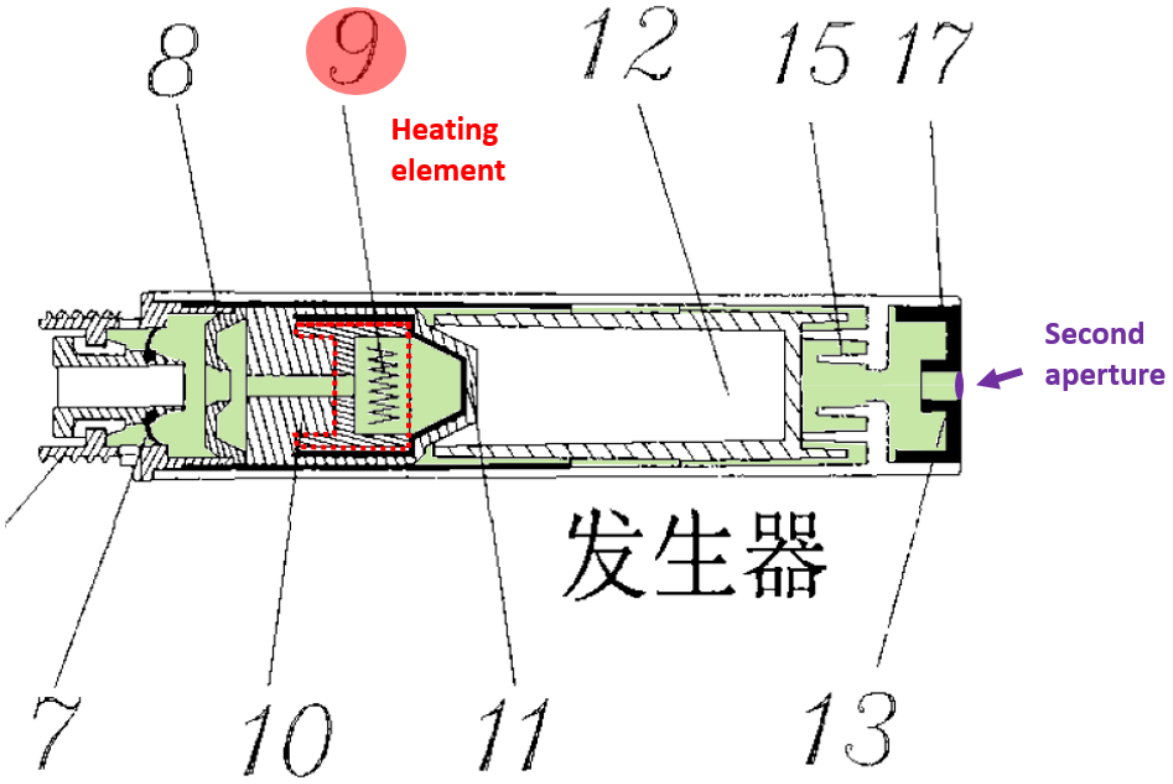

Xia at Fig. 2. Annotated.

249. Accordingly, it is my opinion that Xia does not teach or render obvious this claim.

C. Claim 8

1. Limitations [8.p], [8.a1], [8.c1]

250. Claim 8 recites "the cartridge comprising: a housing having an interior and a solution holding medium reservoir adapted to hold a solution…a heating element located in the interior of the housing."

251. This limitation is not rendered obvious by the Xia-based obviousness analyses presented by Dr. Sturges for the same reasons provided above for [1.b1], [1.f], and [1.g]. [Section VI.A.1, *supra.*]

2. Limitation [8.a2]

252. Limitation [8.a2] is not rendered obvious by the Xia-based obviousness analyses presented by Dr. Sturges for the same reasons provided above for limitation [1.b2].

3. Limitation [8.b1]

253. Limitation [8.b1] is not rendered obvious by the Xia-based obviousness analyses presented by Dr. Sturges for the same reasons provided above for limitation [1.c].

4. Limitation [8.c2]

254. Limitation [8.c2] is not rendered obvious by the Xia-based obviousness analyses presented by Dr. Sturges for the same reasons provided above for limitation [1.h].

D. Claims 9-15

255. Claims 9-15 depend from claim 8. Therefore, it is my opinion, Xia on its own, or combined with Wang and/or Fang, does not render obvious claims 9-15 for at least the same reasons provided above explaining why claim 1 is not rendered obvious.

256. However, there are additional reasons that Dr. Sturges' analysis does not render claims 10-11 and 15 obvious. I address these additional reasons in the next subsections.

1. Claim 10 – Additional Issues

257. Claim 10 recites "The cartridge of claim 9, wherein the heating element is a coil having a maximum diameter, the airflow passageway having a length having a circular cross section having a diameter along a majority of the length, the maximum diameter of the coil being smaller than the diameter of the circular cross section of the length of the airflow passageway."

258. Claim 10 is not rendered obvious by the Xia-based obviousness analyses presented by Dr. Sturges for the same reasons provided above for Claim 2.

NJOY Exhibit 2022.151
Juul v. NJOY
IPR2024-00161

2. Claim 11 – Additional Issues

259. Claim 10 recites "The cartridge of claim 10, wherein the first aperture on the first end is located centrally and axially with respect to the housing, the first aperture having a cross-sectional area measured perpendicular to a central longitudinal axis of the housing, the interior of the airflow passageway between the heating element and the second aperture being no smaller in cross-sectional area than the cross-sectional area of the first aperture."

260. Claim 11 is not rendered obvious by the Xia-based obviousness analyses presented by Dr. Sturges for the same reasons provided above for Claim 3.

3. Claim 15 –Additional Issues

261. Claim 15 recites "The cartridge of claim 8, wherein the airflow passageway has a uniform cross-sectional area measured perpendicular to a central longitudinal axis of the housing between the heating element and the second aperture."

262. Claim 15 is not rendered obvious by the Xia-based obviousness analyses presented by Dr. Sturges for the same reasons provided above for Claim 7.

E. Claim 16

1. Limitations [16.p], [16.a1], [16.c1]

263. Claim 16 recites "the cartridge comprising: ([16.p]) a housing having an interior and a solution holding medium adapted to hold a solution in the interior of the housing ([16.a1])…a heating element located in the interior of the housing…([16.c1]).

264. This limitation is not rendered obvious by the Xia-based obviousness analyses presented by Dr. Sturges for the same reasons provided above for [1.b1], [1.f], and [1.g]. [Section VI.A.1, *supra.*]

2. Limitation [16.a2]

265. Limitation [16.a2] is not rendered obvious by the Xia-based obviousness analyses presented by Dr. Sturges for the same reasons provided above for limitation [1.b2].

3. Limitation [16.b1]

266. Limitation [16.b1] is not rendered obvious by the Xia-based obviousness analyses presented by Dr. Sturges for the same reasons provided above for limitation [1.c].

4. Limitation [16.b3]

267. Limitation [16.b3] recites "the airflow passageway having an exterior adjacent to the solution holding medium along a majority of the length of the airflow passageway." In my opinion, Juul and Dr. Sturges have failed to show that Xia teaches or renders obvious this limitation.

268. As I explained above, Dr. Sturges' identification of airflow passageway in Xia is incorrect. Even assuming that his identification is correct, he fails to show that Xia teaches or renders obvious this limitation.

269. Dr. Sturges argues that Xia's airflow passageway has an exterior that is the outermost portion of the interior of the soft suction nozzle 13. He then argues that "[t]hat exterior is adjacent to item 12 [liquid storage chamber]." [Sturges Decl. ¶ 223.] He illustrates his argument as below.

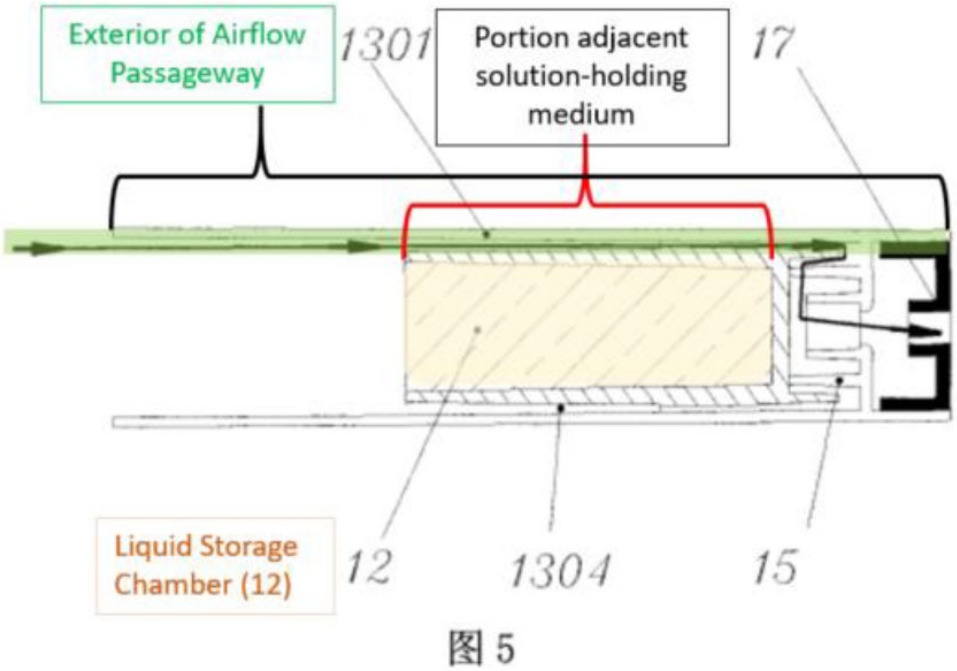

Sturges 881 Decl. ¶ 223 (annotating Xia Fig. 5)

270. His argument fails. In the figure below, I annotate the exterior and interior of airflow passageway as Dr. Sturges identify them. Clearly, the solution holding medium (liquid storage chamber 12) is not adjacent to the exterior. Instead, there is a gap in between, which Xia in fact specifically describes. [Xia at 10 ("[A] gap which is used as an airflow channel is left between the soft suction nozzle 13 and the liquid storage chamber 12.").]

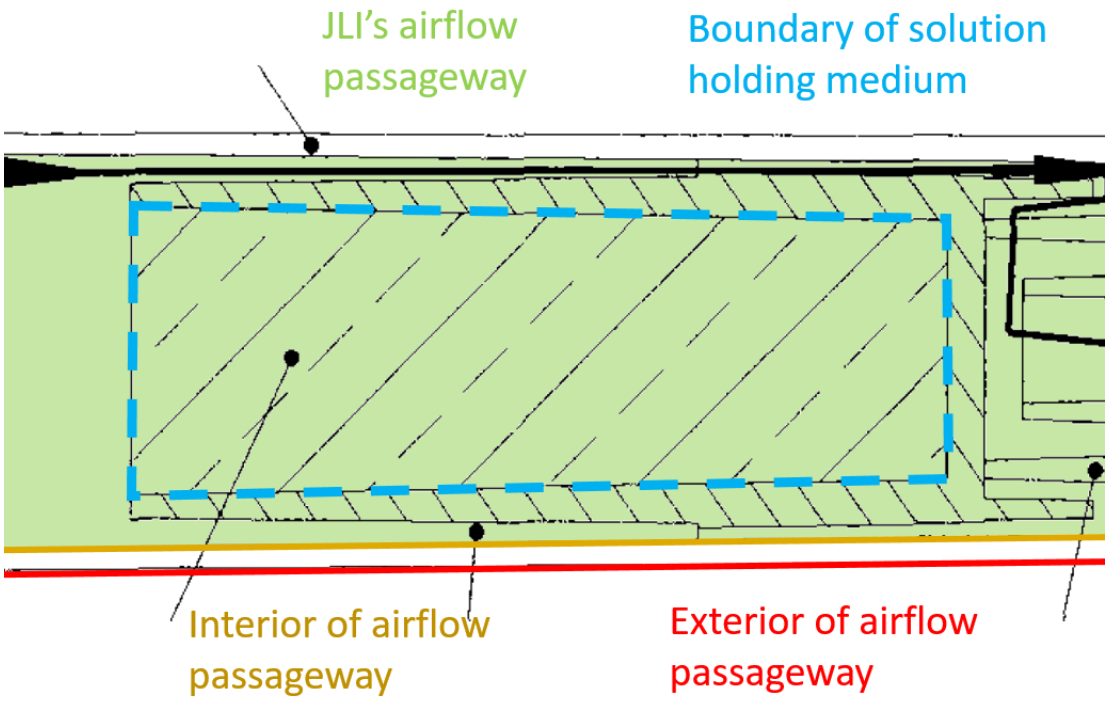

Xia at Fig. 5 (cropped and annotated)

271. Even if the width of the gap is not material in determining whether two objects are "adjacent," Dr. Sturges' argument also fails. It is clear from the figure

above that the solution holding medium is adjacent to the interior of the airflow passageway and not the exterior.

5. Limitation [16.b4]

272. Limitation [16.b4] is not rendered obvious by the Xia-based obviousness analyses presented by Dr. Sturges for the same reasons provided above for claim 7.

6. Limitation [16.c3]

273. Limitation [16.c3] is not rendered obvious by the Xia-based obviousness analyses presented by Dr. Sturges for the same reasons provided above for claim 3.

F. Claims 17-27

274. Claims 17-27 depend from claim 16. Therefore, it is my opinion, Xia on its own, or combined with Wang and/or Fang, does not render obvious claims 17-27 for at least the same reasons provided above explaining why claim 16 is not rendered obvious.

275. However, there are additional reasons that Dr. Sturges' analysis does not render claims 18, 21, and 26-27 obvious. I address these additional reasons in the next subsections.

1. Claim 18 – Additional Issues

276. Claim 18 recites "The cartridge of claim 16, wherein the heating element is a coil having a maximum diameter and the uniform cross-sectional area of the

airflow passageway is a circle having a diameter, the maximum diameter of the coil being smaller than the diameter of the circle of the uniform cross-sectional area of the airflow passageway."

277. Claim 18 is not rendered obvious by the Xia-based obviousness analyses presented by Dr. Sturges for the same reasons provided above for Claim 2.

2. Claim 21 – Additional Issues

278. Claim 21 recites "The cartridge of claim 16, wherein the heating element is a coil having a maximum diameter and the uniform cross-sectional area of the airflow passageway is a circle having a diameter, the maximum diameter of the coil being smaller than the diameter of the circle of the uniform cross-sectional area of the airflow passageway."

279. Claim 21 is not rendered obvious by the Xia-based obviousness analyses presented by Dr. Sturges for the same reasons provided above for Claim 2.

3. Claim 26 – Additional Issues

280. Claim 26 recites "The cartridge of claim 16, wherein the heating element is in operative connection with a wicking material, and the wicking material is operative to attract a portion of the solution from the solution holding medium located immediately adjacent opposite ends of the heating element toward the heating

element." In my opinion, Juul and Dr. Sturges have failed to show that Xia teaches or renders obvious this limitation.

281. Claim 26 requires the wicking material to attract a portion of the solution from "the solution holding medium ***located immediately adjacent opposite end*** of the heating element toward the heating element." Dr. Sturges justified the "immediately adjacent opposite ends" limitation by stating "As explained above in claim 1[h], the solution holding medium surrounds the heating element, and so it is immediately adjacent opposite ends of the heating element." [Sturges Decl. ¶ 248.] With respect to claim limitation [1.h], Dr. Sturges identified the secondary liquid storage chamber 10 as the claimed "solution holding medium" that surrounds the heating element. [Sturges 881 Decl. ¶ 155.] I reproduced a figure below from Dr. Sturges' declaration which illustrates his read of limitation [1.h].

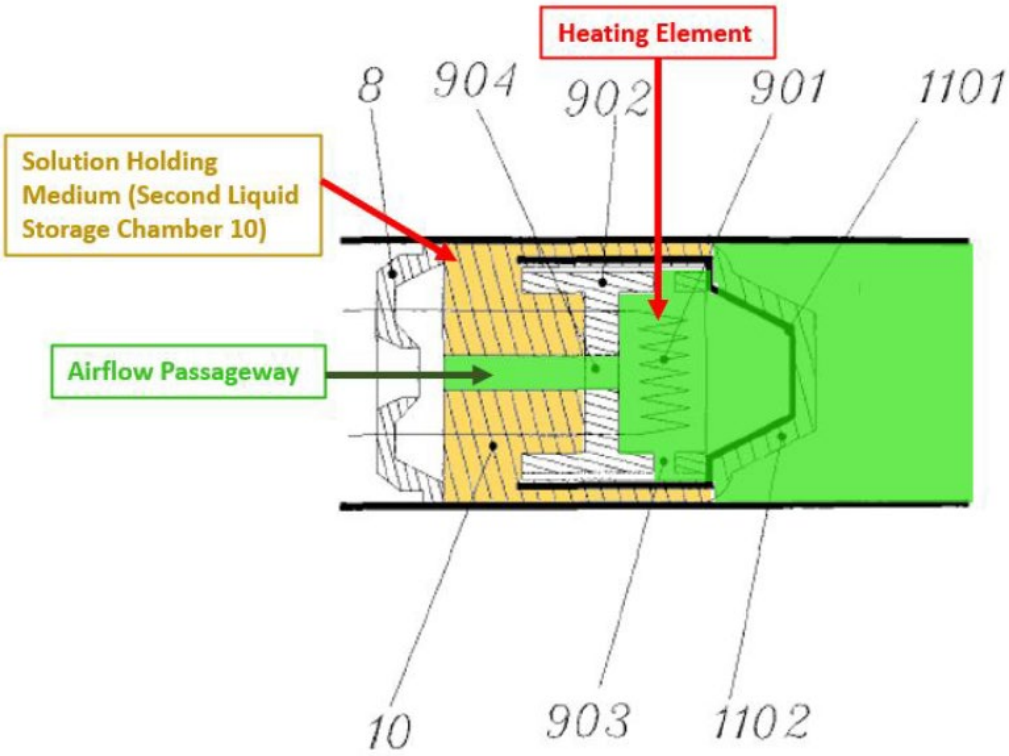

Sturges Decl. ¶ 155 (annotating Xia Fig. 5)

282. Accordingly, it is clear that for purpose of claim 26, Dr. Sturges identifies the secondary liquid storage chamber 10 as the recited "solution holding medium located immediately adjacent opposite end of the heating element." Under Dr. Sturges' theory, claim 26 then requires the wicking material to "attract a portion of the solution from the [secondary liquid storage chamber 10] toward the heating element."

283. Dr. Sturges cannot make this showing. Dr. Sturges identified two components as the claimed wicking material (1) liquid-guiding mechanism 11 and (2)

secondary liquid chamber 10. [Sturges 881 Declaration ¶ 248.] As to the liquid-guiding mechanism, Dr. Sturges relied on Xia's disclosure that "the chemical liquid flows from the liquid storage chamber 12 into the secondary liquid storage chamber 10 through the liquid-guiding mechanism 11." [*Id.* (citing Xia at 10).] This disclosure cannot support Dr. Sturges' argument because it clearly teaches that the liquid-guiding mechanism 11 attracts liquid ***toward***, not ***from***, the secondary liquid storage chamber 10. As such, the liquid-guiding mechanism is not a wicking material that attracts solution from the solution holding medium located immediately adjacent opposite ends of the heating element toward the heating element;" instead, it attracts solution from another component toward the solution holding medium.

284. Dr. Sturges' second theory—the secondary liquid storage chamber 10 as the recited wicking element—also fails. Under this theory, Dr. Sturges effectively opines that Xia discloses this limitation because the secondary liquid storage chamber attracts liquid from itself. The claim language, however, clearly requires a wicking material that is separate and distinct from the solution holding medium. [*See also* 881 Patent at 6:44-47 ("The heating element can comprise wicking material that draws the liquid solution from the absorbent material 204 towards the heating element 222.").]

NJOY Exhibit 2022.160
Juul v. NJOY
IPR2024-00161

285. In fact, a POSITA would have understood the secondary liquid storage chamber to draw liquid away from the heater, not towards. Xia teaches that "through a capillary action of the liquid-guiding mechanism 11, the chemical liquid stored in the liquid storage chamber 12 is guided into the secondary liquid storage chamber 10." As shown below, the liquid storage chamber 12 is on the right side of the heater, whereas the secondary liquid storage chamber 10 is on the opposite side of the heater. The liquid guiding mechanism transfers the liquid from liquid storage chamber 12 to the secondary liquid chamber 10. When a user inhales, airflow causes liquid in the secondary liquid chamber 10 to spray into the central channel. [*See* Section V.A, *supra*.]

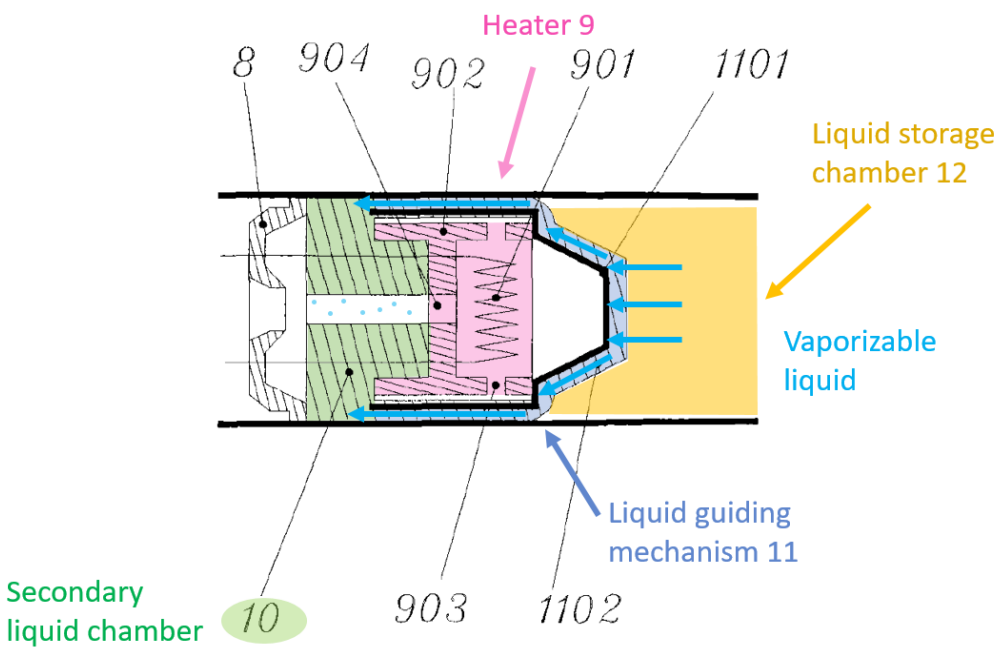

Xia at Fig. 5. Annotated.

286. After attempting to read Xia onto this limitation, Dr. Sturges attempts to combine Xia with Wang and/or Fang. For example, he writes:

> Wang discloses this limitation, stating that the organic fiber 105 is wound around the heating element in conjunction with the tobacco extract 103. In this configuration, the organic fiber acts as a wicking element to draw the solution to the heating element from all ends, including those opposite each other. [Dr. Sturges 881 Declaration, ¶ 249.]

287. However, a POSITA would not have found it obvious to modify Xia's heater 9 to include a wicking material. As I explained above, Xia introduces droplets of the chemical liquid into the airflow upstream of the heating element. [*See* Section V.A, *supra*.] There is no need to add more liquid directly at the heating element. This method differs significantly from the invention described in the 881 Patent which uses a wick to deliver liquid via physical contact. A POSITA would not see the need to have two liquid adding systems. Basically, Dr. Sturges is adding an additional component to perform a function that is already being performed by another structure in Xia. I note that Dr. Sturges has not suggested removing the secondary liquid storage compartment and eliminating its droplet-forming function. Dr. Sturges makes a

similar argument using Fang. However, that proposed combination suffers from the same type of problems as those described above for the Wang combination.

4. Claim 27 – Additional Issues

288. Claim 27 recites "The cartridge of claim 16, wherein the airflow passageway has a uniform cross-sectional area measured perpendicular to the central longitudinal axis of the housing between the heating element and the second aperture."

289. Claim 27 is not rendered obvious by the Xia-based obviousness analyses presented by Dr. Sturges for the same reasons provided above for Claim 7.

VII. Ground 2: Claims 1–27 Would Not Have Been Obvious Based on Wang or Wang in View of Fang

290. I have analyzed Petitioner's Ground 2 based on Wang or Wang in view of Fang. I disagree with Petitioners' and Dr. Sturges' arguments that Wang on its own, or in view of Fang renders obvious claims 1–27 of the 881 patent.

291. The claims are not rendered obvious because the Wang-based obviousness arguments put forth by Dr. Sturges are missing certain limitations, or a POSITA would not have been motivated to make the proposed combinations. The unproven limitations and the claims in which they appear are shown in the following table.

Table of Unproven Limitations in the Wang-Based Obviousness Grounds

	Limitation	**Claims**
1	housing includes/having a first aperture on the first end	[1.b2], [8.a2], [16.a2]
2	an airflow passageway [that extends/extending/having a length extending] centrally and axially with respect to the housing intermediate of the first aperture on the first end of the housing and the second aperture on the second end of the housing	[1.c], [8.b1], [16.b1]
3	the heating element extends transversely across the airflow passageway	[1.g], [8.c1], [16.c1]
4	wherein the heating element is a coil having a maximum diameter, the airflow passageway having a length having a circular cross section having a diameter along a majority of the length, the maximum diameter of the coil being smaller than the diameter of the circular cross section of the length of the airflow passageway	2, 10, 18, 21
5	wherein the first aperture on the first end is located centrally and axially with respect to the housing, the first aperture having a cross-sectional area measured perpendicular to a central longitudinal axis of the housing, the interior of the airflow passageway between the heating element and the second aperture being no smaller in cross-sectional area than the cross-sectional area of the first aperture.	3, 11

6	the airflow passageway has a uniform cross-sectional area measured perpendicular to a central longitudinal axis of the housing between the heating element and the second aperture.	7, 15, 27
7	the airflow passageway having an interior having a uniform cross-sectional area measured perpendicular to the central longitudinal axis of the housing and extending continuously along a majority of the length of the airflow passageway	[16.b4]
8	the first aperture on the first end is smaller than the second aperture on the second end	4, 12, 20, 23
9	The heating element is in operative connection with a wicking material … operative to attract a portion of the solution from the solution holding medium … toward the heating element	26

A. Wang Does Not Render Obvious the Challenged Claims

1. Claims 1, 8, 16 (Independent Claims)

a. Limitation [1.b2]

292. Limitation [1.b2] requires "wherein the housing includes a first end and a second end that is opposite the first end, wherein the housing includes a first aperture on the first end and a second aperture on the second end." In my opinion, JLI and Dr. Sturges have failed to show that Wang teaches or renders obvious this limitation.

293. First, Dr. Sturges has failed to show that Wang teaches this limitation because he has not identified apertures of the housing. The annotated version of Wang Figure 3 below shows JLI's and Dr. Sturges' identification of purported housing apertures. The identified apertures are apparently located in the "solution holding medium (105)," rather than the housing. A POSITA would not recognize purported openings in the solution holding medium (also referred to as "organic fiber 105") as meeting the requirement that *the housing have* a first aperture on the first end and a second aperture on the second end.

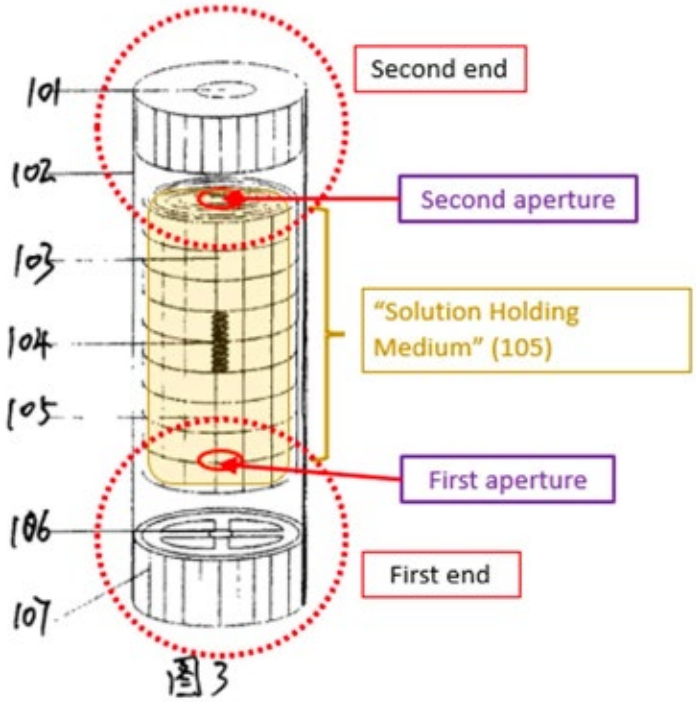

Dr. Sturges' Identification of Housing Apertures [Sturges 881 Declaration, page 160.]

294. Second, the area of the organic fiber 105 identified by Dr. Sturges is not an opening, so a POSITA would not recognize that area as an aperture. Note that in the above figure, Dr. Sturges has added solid red ellipses at the top and the bottom of the solution holding medium (105). However, as I explained above, Wang does not disclose a central airflow passageway and there are no openings at those locations indicated by Dr. Sturges. [*See* Section V.B, *supra*.] When Wang Figure 3 is viewed without Dr. Sturges' annotations, as shown below on the left, it is apparent that there are no openings in the locations identified by Dr. Sturges. Additionally, Wang Figure 5, reproduced below on the right, provides a better view of the organic fiber 105 in the solution holding medium. Figure 5 clearly represents what the text of Wang indicates - there are no apertures formed in the ends of the organic fiber 105. The fiber is simply "wound around" the electric heater. [Wang, page 4.]. I note that in his deposition, Dr. Sturges admitted that that Wang did not have a textual description of any purported apertures in the ends of the organic fiber 105. [EX2017, 51:23–52:3.]

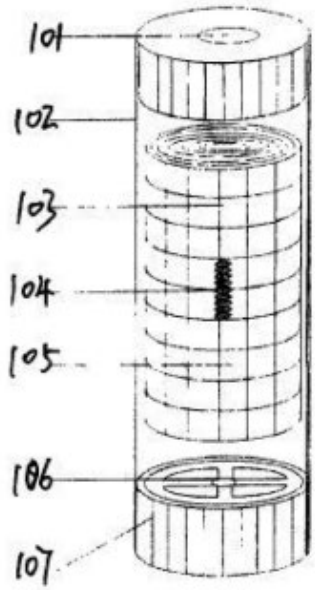

Fig. 3

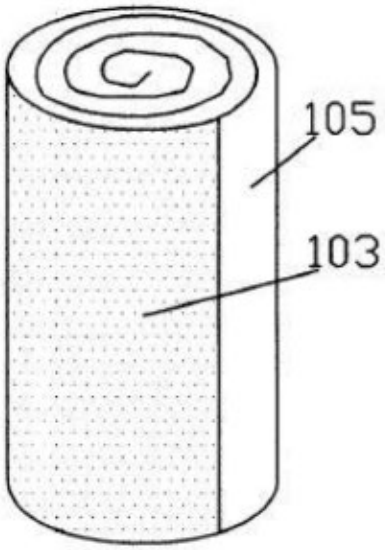

Fig. 5

Original Wang Figures 3 and 5: Free of Dr. Sturges' Annotations Indicating Apertures in the Ends of Organic Fiber 105.

295. Third, even if there were openings in organic fiber 105, then they still fail to teach the limitation because they are not on the ends of the housing. I note that, in order to encompass the purported apertures, Dr. Sturges has drawn very large-diameter circles that extend very far from the ends of the housing. Using a computer drawing program I measured the diameter of the circles and compared them to the overall length of the cartridge. The diameter of the circles were 47% of the overall length (158 px/336 px). A POSITA would not think that a circle that was 47% the size of the overall cartridge length could be used to identify features "on the end" of the cartridge.

I discuss my understanding of "ends" in my claim construction section, and the proper construction of "ends" is "the extrema of an object." These circles do not meet this definition.

296. Given that Wang does not render obvious limitation [1.b2], it does not render obvious Claim 1. Additionally, this same claim limitation appears in all of the challenged independent claims, such as in limitations [8.a2] and [16.a2]. Therefore, Wang does not render obvious any of the challenged claims.

b. Limitation [1.c]

297. Limitation [1.c] requires "wherein the housing includes an airflow passageway that extends centrally and axially with respect to the housing intermediate of the first aperture on the first end of the housing and the second aperture on the second end of the housing." In my opinion, JLI and Dr. Sturges have failed to show that Wang teaches or renders obvious this limitation.

298. As I explained above, Wang does not disclose an airflow passageway that extends centrally and axially. [Section V.B, *supra*.] Dr. Sturges relies on his interpretation of Wang Figures 3 and 5 to suggest that such a passageway exists. These two figures are reproduced below for convenience. Neither figure shows a central airflow passageway.

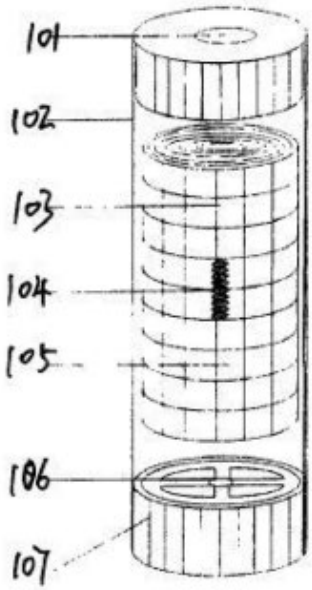

Fig. 3

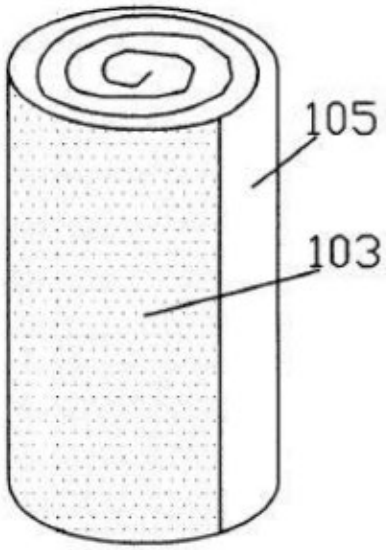

Fig. 5

Wang Figures 3 and 5.

299. In order to justify his opinion regarding the existence of a central airflow passageway, Dr. Sturges adds an assumed passageway centrally and radially down the middle of Wang figure 3, as shown below.

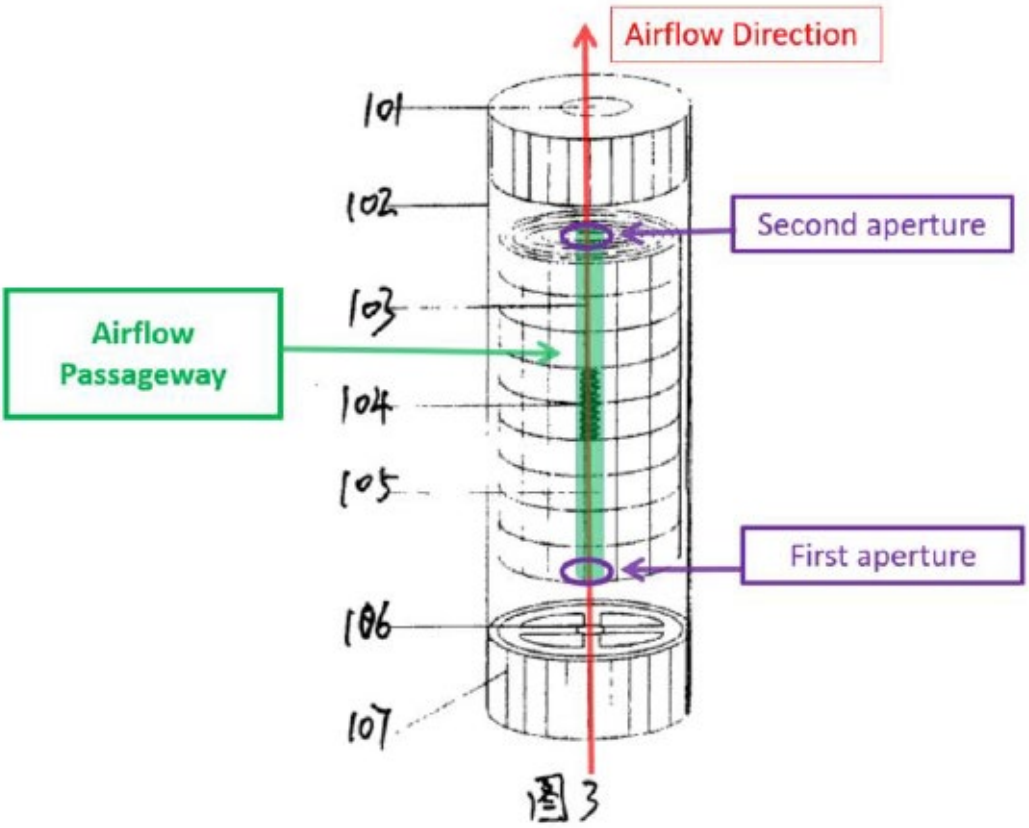

Sturges 881 Decl. ¶ 262

300. Yet Dr. Sturges admitted in his deposition that Wang does not provide any description of the assumed airflow passageway that he added to Wang Figure 3. [EX2017, 51:23–52:3.] Furthermore, as shown below, Dr. Sturges ignored the airflow passageways that are shown in the figure on the outside edges (not centrally extending). [Wang at 7 ("The interior of the shell 102 provides a space for the electric heater 104 and the tobacco extract 103 and organic fiber 105 wound around it, and also

provides a space for smoke produced when the tobacco extract 103 in the organic fiber 105 is heated by the electric heater 104.”).]

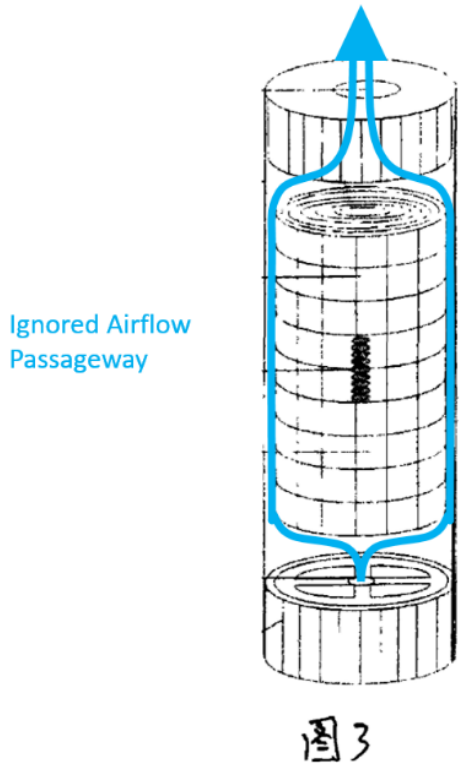

Figure 3 of Wang Annotated to Show Ignored Airflow Passageways.

301. Based on my reading of Wang and in view of its figures, the heating element is wound in the organic fiber. The heating element would heat nearby liquid into vapor, which vapor would disperse throughout the organic fiber. As the user inhales, air will follow a pathway along the gaps and pick up the vapor dispersing

through the organic fiber. The air traveling along the outer surface of the organic fiber would then come back toward the center in order to exit out the mouth end.

302. Given that Wang does not render obvious limitation [1.c], it does not render obvious Claim 1. Additionally, this same claim limitation appears in all of the challenged independent claims, such as in limitations [8.b1] and [16.b1]. Therefore, Wang does not render obvious any of the challenged claims.

c. Limitation [1.g]

303. Limitation [1.g] requires "wherein the housing includes a heating element located in the interior of the housing, ***wherein the heating element extends transversely across the airflow passageway***, wherein the airflow through the passageway passes on both transverse sides of the element." In my opinion, JLI and Dr. Sturges have failed to show that Wang teaches or renders obvious this limitation.

304. The heating element disclosed in Wang does not extend transversely to the purported airflow passageway. It is actually arranged orthogonal to this required configuration. That is, it is parallel to what Dr. Sturges identified as the airflow passageway, as shown below in an annotated version of Wang Figure 3.

NJOY Exhibit 2022.173
Juul v. NJOY
IPR2024-00161

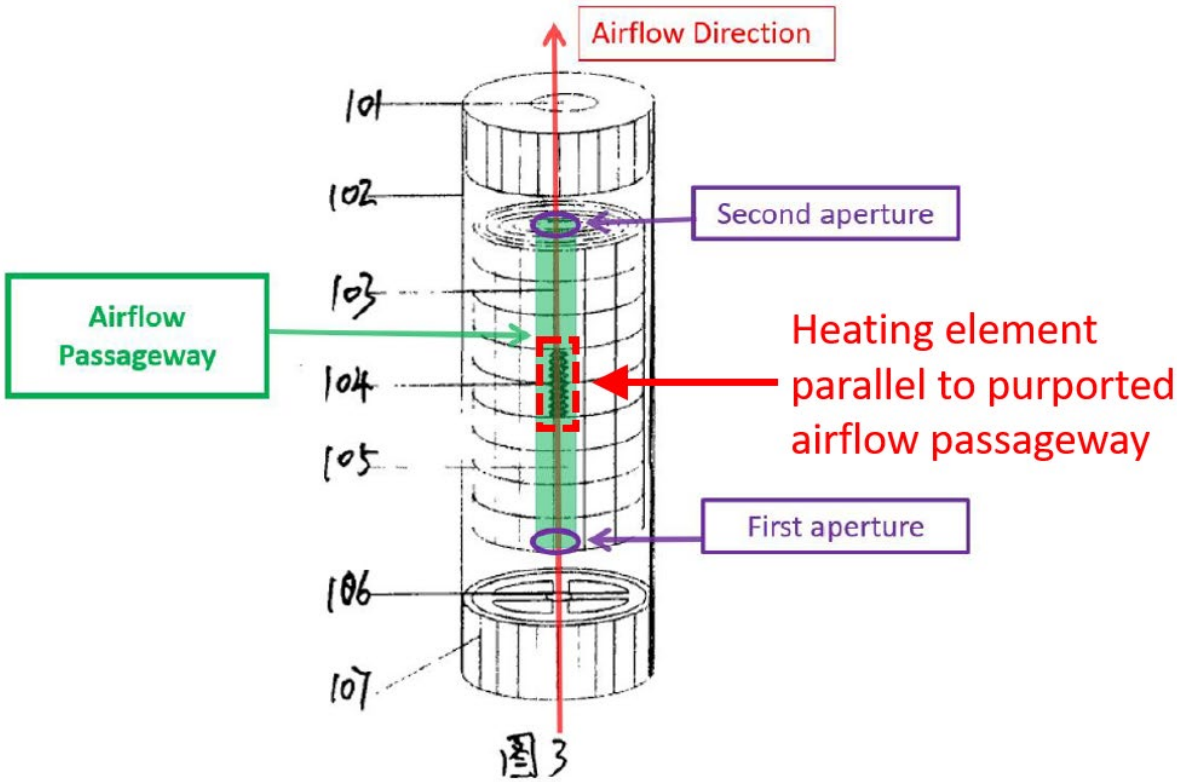

Sturges 881 Decl. ¶ 283 (annotated to highlight heating element)

305. I note that Dr. Sturges attempts to argue that the heating element shown in Wang Figure 3 does extend 'transversely' because it has some width in the transverse direction. [Sturges 881 Declaration ¶ 284; Sturges Depo. Tr. at 32:23-33:2 ("Q. Okay. What's your understanding that it means for the heating element to extend transversely? A. That it have a dimension across from the – at 90 degrees to the longitudinal axis.").] As I explained above, A POSITA would not understand such an interpretation of the transverse requirement. [Section IV.A.2, *supra*.] Additionally,

such an interpretation destroys any meaning of this transverse limitation because every heating element would meet the requirement under this type of interpretation.

306. Note that the heating element is also parallel to, and not transverse across, the actual airflow passageway Wang discloses, as shown below. [*See also* Section VII.A.1.b, *supra*.]

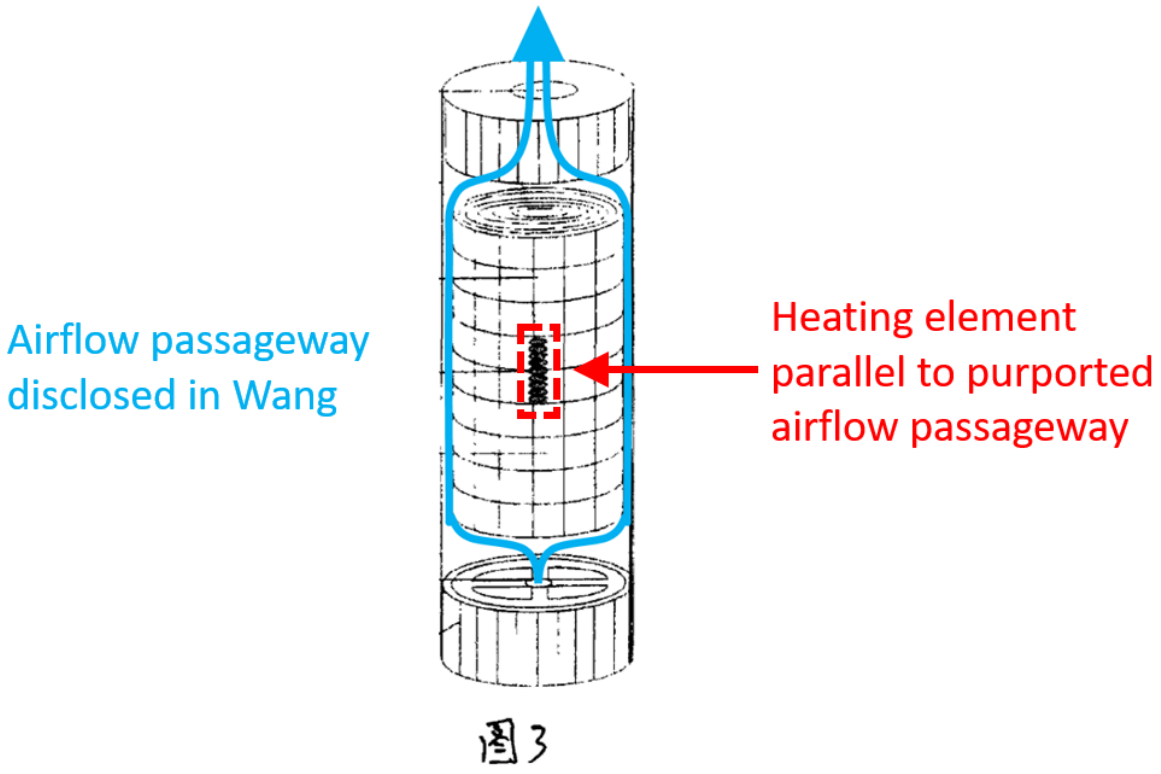

Wang at Fig. 3. Annotated.

307. Finally, I note that it would not be obvious to somehow modify Wang to actually have a transverse heating element because Wang describes that the organic

fiber 105 is wound around the heating element. The only way that such a winding assembly operation could reasonably be performed is by having the heating element extending longitudinally, as shown in Wang Figure 3. A POSITA would know that if a heating element, such as a thin coil of wire, was laid out on a flat piece of organic fiber in a transverse orientation and then rolled up inside the fiber, the coil would invariably be damaged. Additionally, a POSITA would know that such an arrangement would decrease the efficiency of the heating element because the air passing through the fiber would have less time to be heated up by the heating element. In addition, Dr. Sturges failed to consider the effect of changing the orientation of the heating element would have on the quality of vapor, airflow characteristics, and manufacturing cost. For example, with Wang's longitudinal coil, the air flows over a much longer length of the coil. In contrast, with a transverse heating element, the air will only flow over the much smaller width of the coil. This impacts vapor generation. Finally, Wang is a simple, inexpensive, disposable cartridge. Modifying it to include a transverse heating element requires substantial structure to mount and maintain the heating element in a transverse orientation. This increases part cost and manufacturing costs. It is my opinion that these issues discourage rather than motivate this proposed modification.

NJOY Exhibit 2022.176
Juul v. NJOY
IPR2024-00161

308. Given that Wang does not render obvious limitation [1.g], it does not render obvious Claim 1. Additionally, this same claim limitation appears in all of the challenged independent claims, such as in limitations [8.c1] and [16.c1]. Therefore, Wang does not render obvious any of the challenged claims.

2. Claims 4, 12, 20, 23

309. Claims 4, 12, 20, and 23 require "the first aperture on the first end is smaller than the second aperture on the second end." In my opinion, JLI and Dr. Sturges have failed to show that Wang teaches or renders obvious this limitation.

310. As an initial matter, Dr. Sturges does not argue that Wang discloses this limitation. Rather, his opinion comprises a single sentence:

> *To the extent the first aperture on the first end is not seen as smaller than the second aperture on the second end, in Figure 3 of Wang below, a POSITA would have been motivated to make this change, ensuring that the first aperture was smaller than the second aperture to ensure proper airflow exiting the device.* [Sturges 881 Decl. ¶ 308.]

311. Dr. Sturges provided no explanation as to why or how having a larger second aperture ensures proper airflow exiting the device. Dr. Sturges also provided no explanation or evidence suggesting that unmodified Wang lacks proper airflow.

312. I also note that what Dr. Sturges' identified as the first and second apertures are in the organic fiber (yet not disclosed in Wang textually or depicted in any of its figures). The organic fiber is a soft deformable material. Dr. Sturges does not explain how to establish or maintain apertures of differing sizes when the soft deformable material is wound about the heating element.

313. Given that Wang does not render obvious a first aperture smaller than second aperture, it does not render obvious claims 4, 12, 20, and 23.

3. Claim 26

314. Claim 26 requires "The cartridge of claim 16, wherein the heating element is in operative connection with a wicking material, and the wicking material is operative to attract a portion of the solution from the solution holding medium located immediately adjacent opposite ends of the heating element toward the heating element." In my opinion, JLI and Dr. Sturges have failed to show that Wang teaches or renders obvious this limitation.

315. Dr. Sturges argues that Wang's organic fiber 105 is the recited wicking material. [Sturges 881 Decl. ¶ 360.] However, as shown below, Dr. Sturges also identifies organic fiber 105 as the recited solution holding medium. Claim 26 requires "the wicking material to attract a portion of the solution from the solution holding

medium." Thus, it would be clear to a POSITA that claim 26 requires a wicking material that is separate from the solution holding medium. Dr. Sturges failed to make that showing.

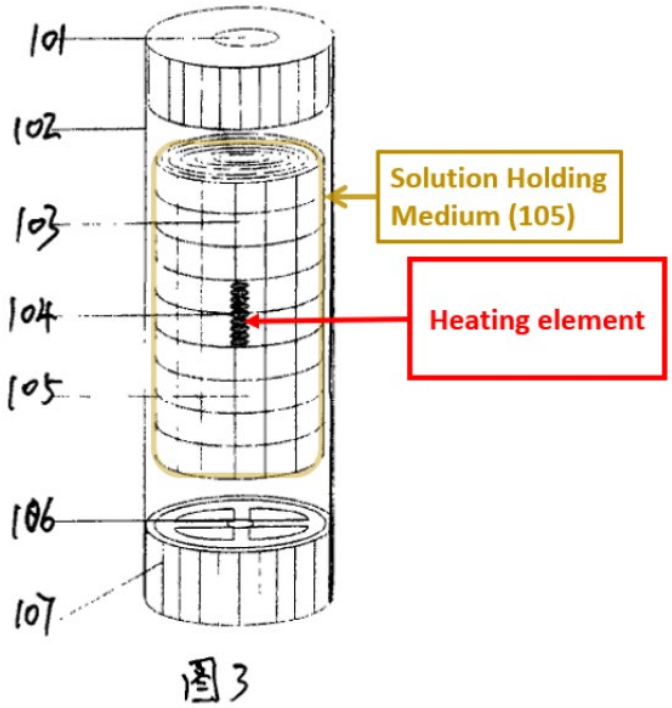

Sturges 881 Decl. ¶ 360

316. Therefore, Dr. Sturges failed to show that Wang teaches or renders obvious claim 26.

4. Claims 2, 3, 7, 10, 11, 15, 18, 21, 27 and Limitation [16.b4]

317. Claims 2, 3, 7, 10, 11, 15, 18, 21, 27 and limitation [16.b4] have limitations placed on the cross-sectional area of the airflow passageway or chamber.

318. Dr. Sturges fails to establish that Wang renders obvious any of these claim limitations because Wang itself does not disclose a central and axial airflow passageway. Recall that Wang Figure 3 does show airflow around the outside of the organic fiber 105, as shown below.

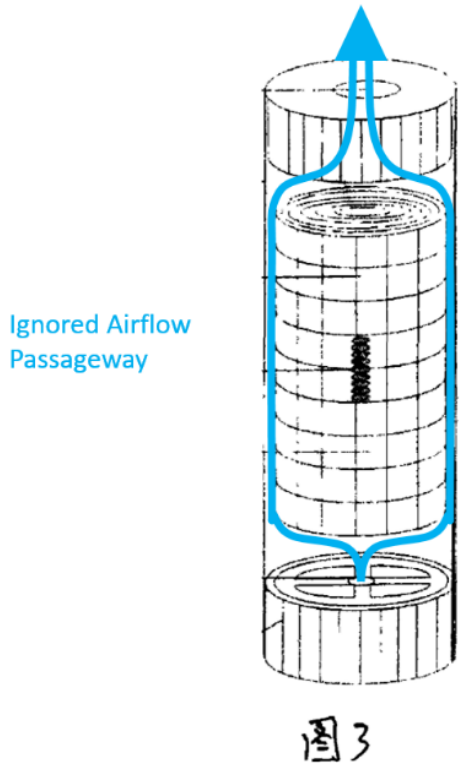

Figure 3 of Wang Annotated to Show Ignored Airflow Passageways.

319. And even assuming that Dr. Sturges is correct that there is a central and axial airflow passageway or chamber, there is no disclosure textually or in the figures that suggests the airflow passageway or chamber has the cross-sectional areas that are required by these claims. The passageway and the chamber would be defined by the wound organic fiber, which is a soft, malleable material. Thus, a POSITA would recognize that any passageway or chamber would not have a uniform cross-sectional area (and likely not be central or axial either). Dr. Sturges assumes there is a passageway or chamber and then assumes on top of that that the passageway or chamber has the requisite cross-sectional area.

320. Even if Wang could somehow be interpreted as rendering obvious an airflow passageway extending centrally and axially (it cannot be stretched to such lengths), then is still would not render obvious these claim limitations because it does not disclose cross sectional areas of airflow passageways.

B. Wang in Combination with Fang Does Not Render Obvious the Challenged Claims

1. No Motivation to Combine Wang with Fang with a Reasonable Expectation of Success

321. Dr. Sturges does not make clear what his proposed combination of Wang and Fang looks like. Instead, he generally stated that "the resulting device would: (1)

maintain Wang's two-piece system and first aperture, as well as, the electrical components described, but; (2) modify Wang's solution holding medium to wrap around the airflow passageway and heating element and orient the heating element horizontally across the airflow, based on the architecture of these elements in Fang." [Sturges Decl. ¶ 268.] Also, he provides separate discussions of the combination with respect to certain claim limitations, which I list below.

> *To the extent the above does not satisfy the claim language, as explained above in section 1[c], as modified with Fang,* ***the heating element would be oriented perpendicularly as in Fang****, which is at a minimum is covered by the claims as depicted in Figure 2 of the '881 patent.* [Sturges 881 Decl. ¶ 287 (limitation [1.g])]
>
> *A POSITA would be motivated to modify Wang such that it had* ***a central and axial uniform, cylindrical passageway through the center of the cylinder of the cartridge*** *housing by creating a space, to the extent it is not already disclosed above in Wang, within the solution holding medium 105 for the passageway and extending the passageway from one aperture to the other, with the solution holding medium around it the entire way to maximize liquid storage. Further, a POSITA would know that to* ***connect***

the liquid to the heating element, one could use the wicking material in the form of item 15 of Fang*, which accomplishes that function in Fang, in the middle of the airflow passageway and connecting to the solution holding medium, and the heating element of Wang or that of Fang wrapped around the wicking material 15.* [Sturges 881 Decl. ¶¶ 266-267 (limitation [1.c])]

Fang's "oil storage device (14)" flanks both sides, or opposite ends, of the heating element with a portion that extends through the 'heating film wire (16)' and draws solution to both ends, and thus in the modification in which the heating element and ***wicking element 15 of Fang*** *is used in Wang, this limitation is met as well.* [Sturges 881 Decl. ¶ 361 (claim 26)]

322. To summarize, Dr. Sturges proposes combining at least Fang's heating element, "airflow passageway," and "wicking material 15" with Wang's cartridge, "based on the architecture of these elements in Fang." A POSITA would not have found it obvious to make these modifications.

323. Recall Dr. Sturges identifies Fang's airflow passageway as the following green-shaded region:

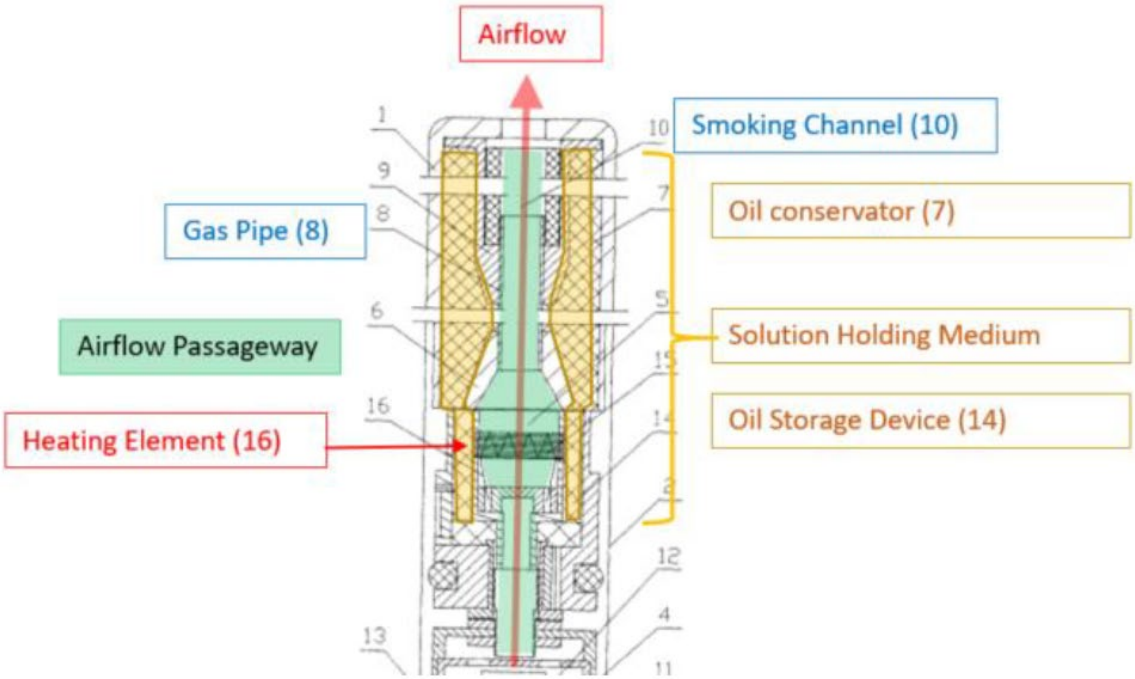

Sturges 881 Decl. ¶ 124

324. As an initial matter, Fang does not disclose an airflow passageway as Dr. Sturges alleges due to the existence of a blocking structure within the alleged passageway. [*See* Section V.C, *supra*.] Moreover, Fang's cartridge design, including design of airflow system, is significantly different from and not compatible with Wang. Wang discloses a liquid storing medium directly wound around a heating coil and air travels along the peripheral of the cartridge housing. [Wang at 7.] As shown below in an annotated version of Fig. 1, Fang discloses a much more complicated structure than Wang: its air channel is defined by multiple structures, including at least gas pipe

8, gas pipe support 9, smoke channel 10, water proof sleeve 6, and walls of oil storage device 14.

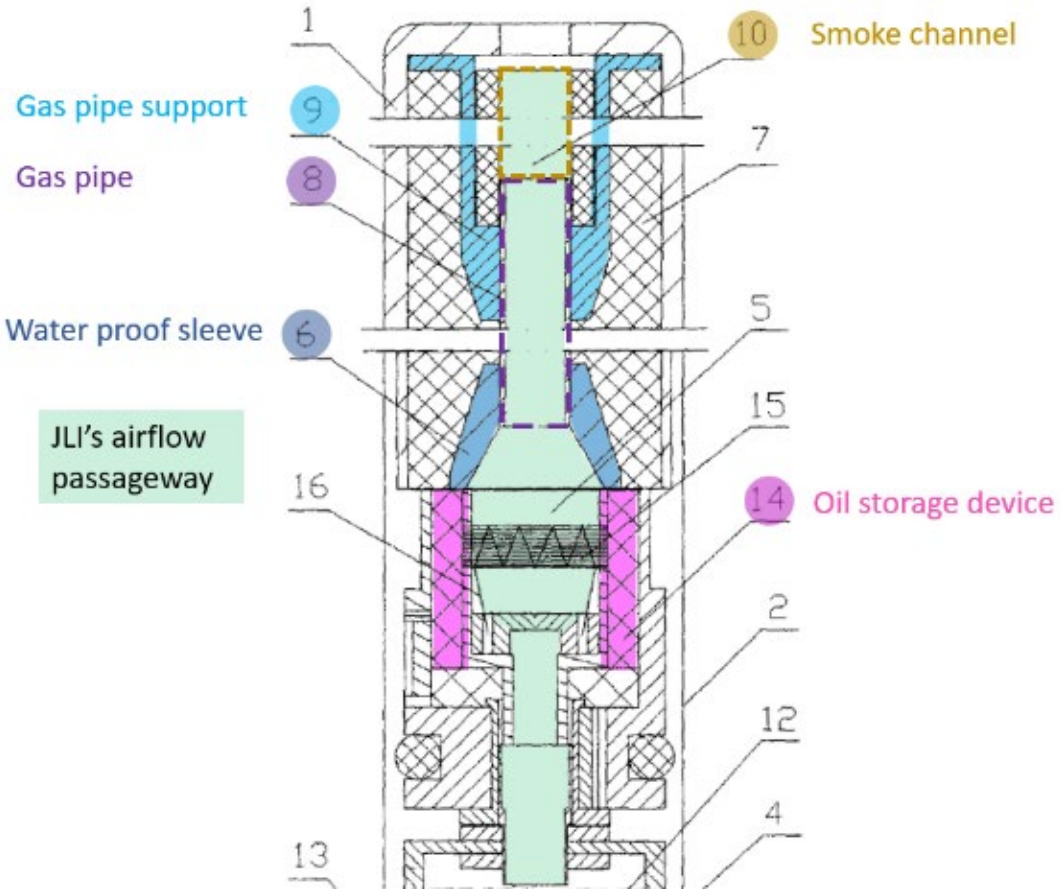

Fang at Fig. 1

325. Dr. Sturges failed to provide any discussion regarding these significant structural differences. Putting Fang's airflow channel into Wang—which is a simple device—would, for example, greatly increase manufacturing cost, result in a completely different airflow, and have different power consumption requirements. In

addition, Fang does not disclose a cartomizer like Wang does; it discloses (1) a liquid cartridge and (2) a main body comprising the heating element and the battery. Fang's use of a liquid cartridge, instead of a cartomizer, justifies its complex and expensive design—most of its components (e.g., wicking structure, heating element, supporting structure) are reusable. When Fang's liquid needs replacement, only the liquid cartridge (called a sucker) would need to be replaced. However, if Wang is modified in the manner suggested by Dr. Sturges by importing all the components making up Wang's airflow channel into Wang's disposable cartomizer, then those components now must be replaced each time the liquid is depleted.

326. Furthermore, importing Fang's airflow passageway into Wang's cartomizer would greatly decrease the liquid storing capacity of Wang, which is undesirable. In Wang, the liquid-storing organic fiber directly wraps around the heating coil and the liquid-storing organic fiber takes up most of the space in the cartomizer. As shown below, Dr. Sturges' proposed modification requires significant reduction of the volume of the liquid-storing organic fiber.

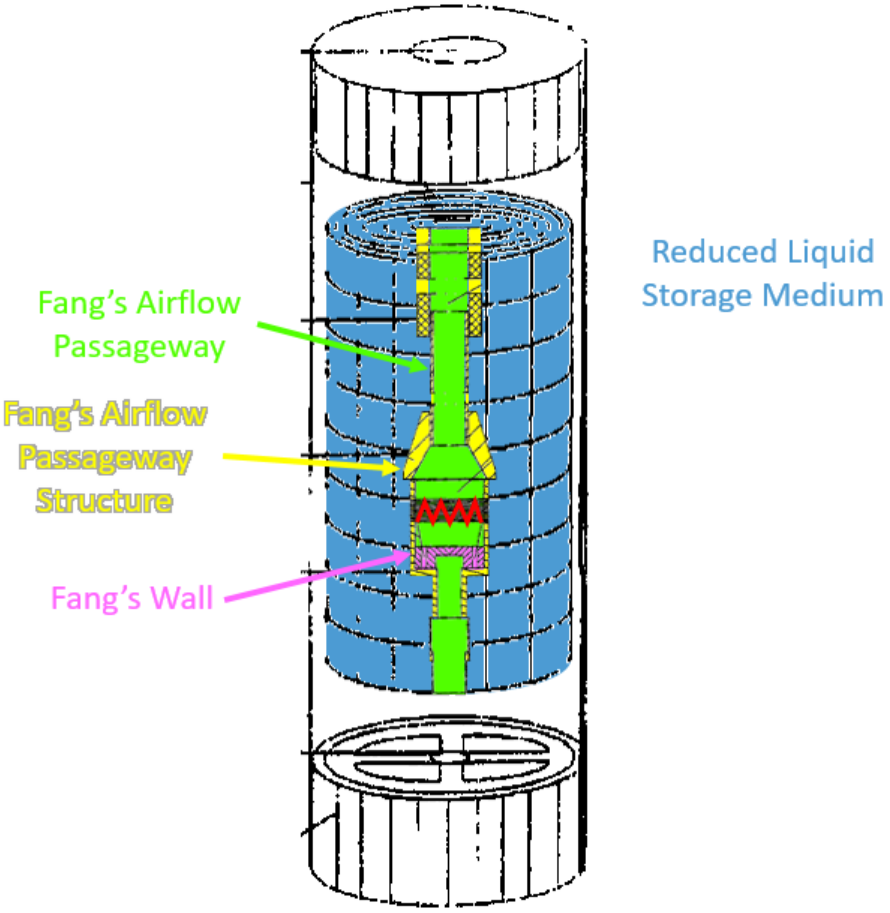

Wang at Fig. 3 modified to reflect Dr. Sturges' proposed modification

327. Dr. Sturges argues that "[a] POSITA would understand the highly obvious benefits of creating an airflow passageway that runs central and along the housing axis, between the two apertures, in creating a uniform, consistent airflow that exists the device at the mouthpiece." [Sturges 881 Decl. ¶ 268.] I disagree that Dr. Sturges has shown that such a need exists for Wang. I have seen no evidence suggesting that Wang suffers from non-uniform or inconsistent airflow. Dr. Sturges'

purported reason is a disingenuous attempt to justify his hindsight driven proposed modification. Dr. Sturges also argues that a POSITA would have been motivated to combine Wang and Fang so that the solution holding medium could insulate a smoker from the heated vapor and the heated vapor from a cold outer environment. [Sturges 881 Decl. ¶ 291.] I disagree that a POSITA would be so motivated. When a user inhales Wang's device, air travels through the gaps adjacent to the housing and also through the fiber holding the vaporizable liquid. This multi path flow is required to properly mix and cool the vapor in order to make a palatable aerosol that does not burn the user's mouth. Placing the liquid storage adjacent to the housing without thermal insulation has two drawbacks in a cold environment. First, the liquid in the storage chamber becomes colder. This is problematic because there is no indication that the heater will increase its heat output based on the temperature of the liquid. Thus, in Petitioner's modification, there is a concern that the heater would inadequately heat the colder liquid to achieve proper vaporization. Second, by not having a cool airflow path along the outer edges of the fiber that combines with the hot vapor coming from the fiber, the device may not generate a properly cooled and mixed aerosol.

328. In addition, a POSITA would not have been motivated to import Fang's transverse heating element into Wang. Note that a POSITA would have understood

NJOY Exhibit 2022.188
Juul v. NJOY
IPR2024-00161

that simply rotating Wang's heating coil 90 degrees would result in an inoperable device because the coil will be prone to deformation when the organic fiber is wound around the heating element. [Section VII.A.1.b, *supra*.] Moreover, doing so means that only the two ends of the heating coil are in contact with the liquid holding medium, which would lead to poor vaporization. Recall that Wang's heating element does not include a wicking component, while Fang's heating element is not just a coil, it is an electric heating film wire in combination with a temporary oil storage device (wicking material). [Fang at 3.]

329. Nor would a POSITA have been motivated to import Fang's wicking system with its transverse heating element into Wang. The two devices are too different in this regard to justify Dr. Sturges' proposed modification. Wang does not use a wicking material to transfer liquid to the heating element. Instead, the heating element is in direct contact with the liquid storage medium. Fang's liquid transferring and vaporizing system is much more complicated than Wang's. Liquid is drawn from a disposable liquid storage (oil conservator 7), through an intermediate wick (oil storage device 14), to the heating element that itself contains a third wicking material (temporary oil storage 15). Wang simply does not need a wicking system, let alone a complicated wicking system such as Fang's.

NJOY Exhibit 2022.189
Juul v. NJOY
IPR2024-00161

330. Dr. Sturges argues that his proposed modification "would increase the surface area of the heater that comes into contact with the airflow and with the nicotine solution and also provide for a wider airflow passageway between the heater and the mouthpiece while simultaneously helping to reduce the length of the electronic cigarette for increased portability." [Sturges 881 Decl. ¶ 287.] I disagree. As explained above, using a transverse heating element in Wang would significantly reduce the heater's surface area contacting the nicotine solution. It is also unclear how changing the orientation of the heating element can help reducing the length of the electronic cigarette unless the liquid-storing volume is significantly shrunk. Also, this modification would not increase the heater's surface area contacting the airflow. And, Dr. Sturges provides no explanation, calculation, or diagram to explain his cursory statement. Therefore, he does not have a reasoned basis for opining that a POSITA would be motivated to make such large changes in Wang, nor is an expectation of success provided by any of Dr. Sturges' analyses.

331. Accordingly, it is my opinion that a POSITA would not have been motivated to combine Wang with Fang as Dr. Sturges proposes.

2. Claims 1, 8, 16 (Independent Claims)

a. Limitation [1.b2]

332. Recall that limitation [1.b2] requires "wherein the housing includes a first end and a second end that is opposite the first end, wherein the housing includes a first aperture on the first end and a second aperture on the second end." Dr. Sturges provides no additional arguments for why a combination of Wang in view of Fang would render obvious this limitation. He simply makes an argument for Wang disclosing this limitation. [*See* Sturges 881 Declaration, ¶ 260.] For the reasons provided above for Wang on its own, the combination of Wang in view of Fang does not render obvious limitation [1.b2], nor claim 1. Given that all of the independent claims have this same limitation, the combination of Wang in view of Fang fails to render any of the challenged claims obvious.

b. Limitation [1.c]

333. Limitation [1.c] requires "wherein the housing includes an airflow passageway that extends centrally and axially with respect to the housing intermediate of the first aperture on the first end of the housing and the second aperture on the second end of the housing." Dr. Sturges argues that Wang combined with Fang renders this limitation obvious by importing Fang's airflow passageway into Wang. As explained above, a POSITA would not have been motivated to make this

NJOY Exhibit 2022.191
Juul v. NJOY
IPR2024-00161

modification with a reasonable expectation of success. As such, Wang in combination with Fang does not render obvious this limitation.

c. Limitation [1.g]

334. Limitation [1.g] requires "wherein the housing includes a heating element located in the interior of the housing, ***wherein the heating element extends transversely across the airflow passageway***, wherein the airflow through the passageway passes on both transverse sides of the element." Dr. Sturges argues that Wang combined with Fang renders this limitation obvious by importing Fang's heating element into Wang. As explained above, a POSITA would not have been motivated to make this modification with a reasonable expectation of success. As such, Wang in combination with Fang does not render obvious this limitation.

3. Claims 4, 12, 20, 23

335. Claims 4, 12, 20, and 23 require "the first aperture on the first end is smaller than the second aperture on the second end." Dr. Sturges provides no additional explanations for why a combination of Wang in view of Fang would render obvious this limitation. He simply states that "[t]he modification of Wang with Fang would not affect this limitation, as the analysis above would remain true." [Sturges

881 Declaration, ¶ 309.] For the reasons provided above for Wang on its own, the combination of Wang in view of Fang does not render obvious these claims.

4. Claim 26

336. Claim 26 recites "The cartridge of claim 16, wherein the heating element is in operative connection with a wicking material, and the wicking material is operative to attract a portion of the solution from the solution holding medium located immediately adjacent opposite ends of the heating element toward the heating element." Dr. Sturges argues that Wang combined with Fang renders this limitation obvious by importing Fang's wicking material into Wang. As explained above, a POSITA would not have been motivated to make this modification with a reasonable expectation of success. As such, Wang in combination with Fang does not render obvious this limitation.

5. Claims 2, 7, 10, 15, 18, 21, 27 and Limitation [16.b4]

337. Claims 2, 7, 10, 15, 18, 21, 27, and limitation [16.b4] each requires the airflow passageway to have a uniform cross-sectional area. [Sturges 881 Decl. ¶ 302.] In my opinion, JLI and Dr. Sturges have failed to show that Wang in combination with Fang teaches or renders obvious these claims and limitations.

338. With respect to claim 2, Dr. Sturges argues that "[t]o the extent the passageway is modified by Fang, the passageway would be uniform and cylindrical in nature, as described above in 1[c] and 1[h]." [Sturges 881 Decl. ¶ 302.] All of his analysis with respect to claims 7, 10, 15, 18, 21, 27, and limitation [16.b4] contain no additional analysis and simply refers back to claim 2. However, what Dr. Sturges identifies as Fang's airflow passageway is not uniform and cylindrical, as shown below. Therefore, even if a POSITA would have been motivated to combine Fang's airflow passageway with Wang (they would not), the modified device does not render obvious claims 2, 7, 10, 15, 18, 21, 27, and limitation [16.b4].

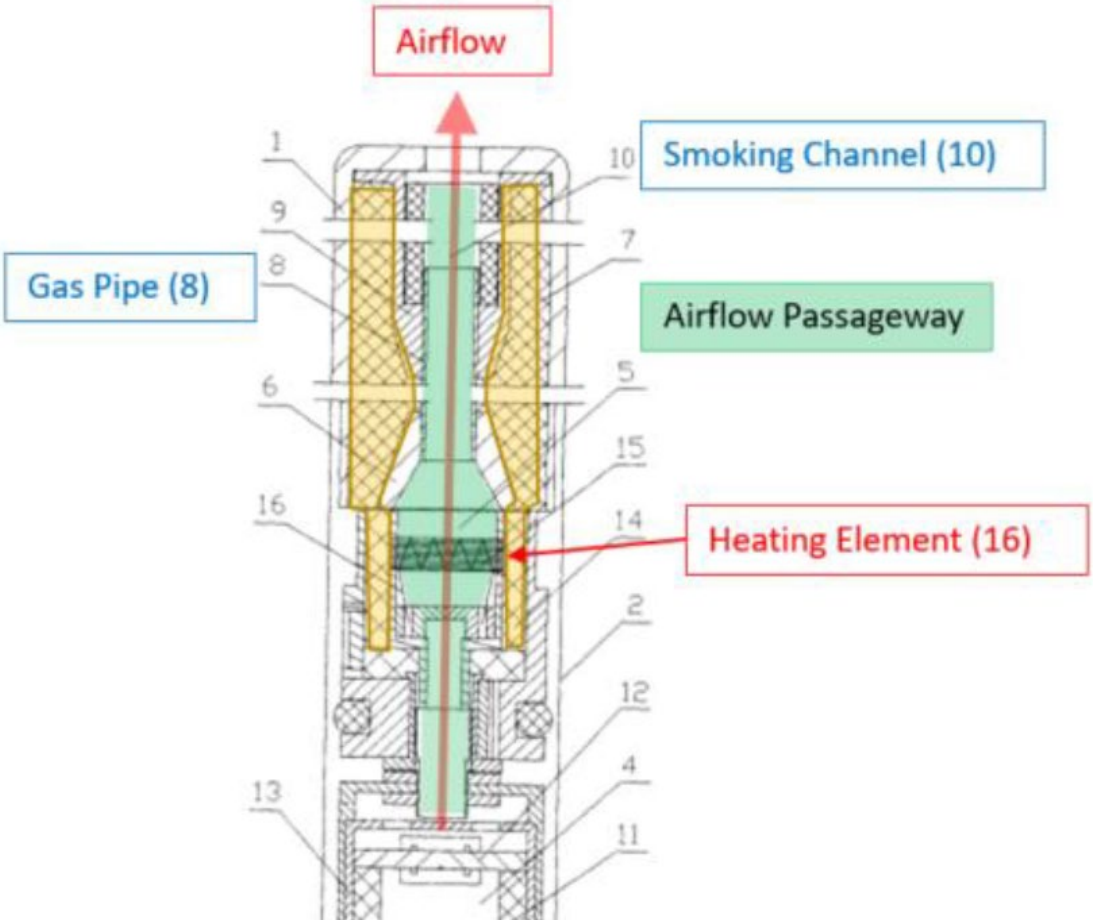

Sturges 881 Decl. ¶ 124

339. In relation with limitation [1.c], Dr. Sturges states that "[a] POSITA would be motivated to modify Wang such that it had a central and axial uniform, cylindrical passageway through the center of the cylinder of the cartridge housing…" [Sturges Decl. ¶ 266.] To the extent his opinion is that a POSITA would combine Fang's airflow passageway with Wang, yet at the same time not use Fang's airflow

passageway structure and instead use a "uniform, cylindrical passageway," he (1) failed to provide any justification and (2) contradicts his own opinion elsewhere.

340. First, Dr. Sturges' only reason for his proposed modification is that "[a] POSITA would understand the highly obvious benefits of creating an airflow passageway that runs central and along the housing axis, between the two apertures, in creating a uniform, consistent airflow that exists the device at the mouthpiece." [Sturges 881 Decl. ¶ 268.] As I explained above, his reason is entirely unconvincing with respect to combining Fang with Wang. [Section VII.B.1, *supra*.] This reason is even more irrelevant if he proposes using a uniform, cylindrical passageway instead of the one he identified in Fang. He provided no explanation as to why Fang's purported airflow passageway cannot provide a uniform and consistent airflow.

341. Second, two paragraphs after he proposes modifying Wang with a "uniform, cylindrical passageway," he opined that the "resulting device would [be]…based on the architecture of these element in Fang." [Sturges 881 Decl. ¶ 268.] His opinions are, therefore, self-contradictory.

342. Therefore, it is my opinion that Dr. Sturges fails to show that Wang in combination with Fang renders obvious claims 2, 7, 10, 15, 18, 21, 27, and limitation [16.b4].

6. Claims 3, 11

343. Claims 3 and 11 recites "the interior of the airflow passageway between the heating element and the second aperture being no smaller in cross-sectional area than the cross-sectional area of the first aperture." Dr. Sturges does not rely on the combination of Wang and Fang as rendering obvious these claims. Instead, he simply states that "[t]he modification of Wang with Fang, as previously described, would not affect this limitation, as the analysis above would remain true." As such, Wang combine with Fang does not render obvious these claims for the reasons I explained above in Section VII.A.4. Moreover, I note that Fang does not clearly disclose the length of its device. Instead, Figure 1 of Fang uses notations to indicate indeterminate lengths at certain locations. As such, a POSITA would not have been able to determine the length of components where such notations are present.

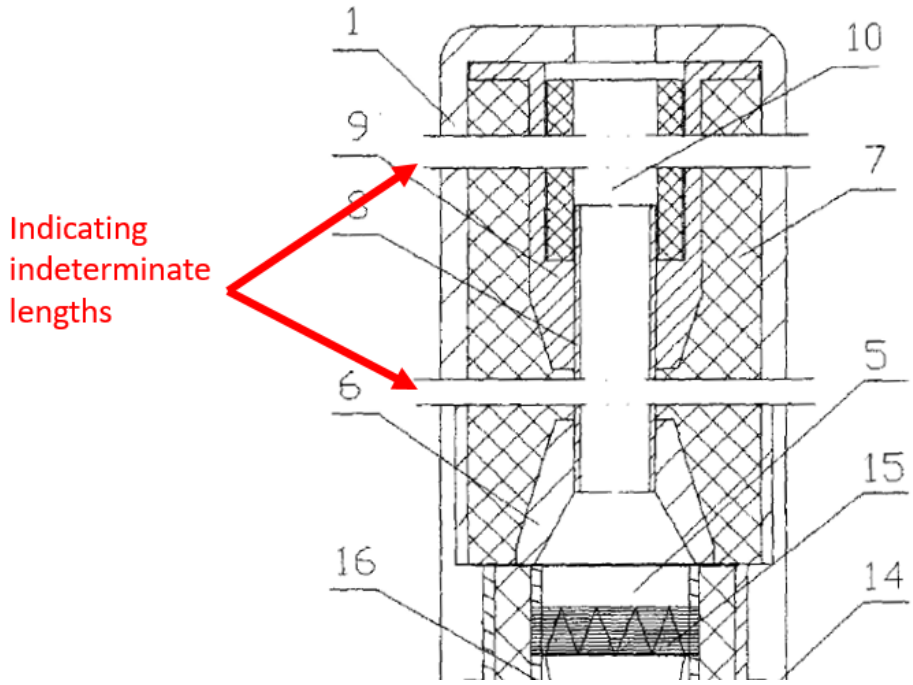

Fang Fig. 1 (annotated)

VIII. Secondary Considerations

A. Nexus

344. In my opinion, there is a nexus between the inventions of the challenged claims and the evidence of Fuma's significant commercial success and industry praise, copying, and licensing of the invention that supports that the challenged claims of the 881 Patent are not obvious.

345. The claims of the 881 Patent recite a complete, operative e-cigarette cartridge: a cartridge configured to couple to a power source, a housing comprising first and second ends, a solution holding medium to hold the solution, and an airflow

passageway between apertures in the housing, and a heating element to vaporize the solution.

346. None of the prior art or evidence that Petitioner has relied on shows the existence of any cartomizer-type two-piece devices that included a transverse heating element in an airflow passageway prior to the claimed invention of the 881 Patent. Commercially available e-cigarette cartomizers that existed before the claimed invention had various issues, including requiring more suction to draw a vapor due to the lack of a defined central, axial airflow passageway, leaking and creating excess droplets during inhalation due to, for example, airflow through the solution holding medium, and providing a brief period of palatable flavor before generating aerosols with a burnt taste. Such burnt flavors can be generated when the heating element is in direct contact with the absorbent material holding solution and the material starts to dry out. [EX2023 at ¶ 4.]

347. Fuma's E-Cigarette cartridge and the claimed invention of the 881 Patent is a complete, operative device (as I explained above), and it eliminated issues with pre-existing cartomizers and provided a better adult consumer experience. The claimed features of a cartomizer that places the heating element directly in the airflow, and not the solution holding medium, reduced the amount of suction required to draw a vapor

by providing a low-resistance path for the airflow, decreased leaking, and a reduction in excess droplets by separating the airflow from the solution holding medium. It also eliminated the burnt taste by separating the heating element from the solution holding medium. [EX2023 at ⁋ 5.]

348. In my opinion, there is a presumption of a nexus between the challenged claims and the evidence of secondary considerations because the Fuma E-Cigarette, which was first sold in 2009 and is depicted in the 1.131 Declaration submitted to the Patent and Trademark Office during the prosecution of the 881 Patent, embodies and is coextensive with each of the challenged claims. EX2030; EX2023 at ⁋⁋ 3, 6. I have not seen any evidence that any unclaimed features of the Fuma E-Cigarette cartridge are material to its functionality or what led to Fuma's commercial success and the industry's praise and copying of the claimed features of the Fuma E-Cigarette. Absent the claimed features of the 881 Patent, no other features would have made for a successful e-cigarette device.

349. There is also a nexus between the challenged claims and the evidence of secondary considerations because the evidence of secondary considerations directly results from the unique characteristics of the claimed invention (namely, placing the

heating element directly in the airflow passageway), which problematic issues with pre-existing devices, such as the generation of burnt flavors. [EX2023 at ⁋ 5.]

B. Fuma E-Cigarette Embodies the Challenged Claims of the 881 Patent

350. In my opinion, the Fuma E-Cigarette, which was first sold in 2009 and is depicted in the 1.131 Declaration submitted to the Patent and Trademark Office during the prosecution of the 881 Patent, embodies each of the challenged claims. [EX2023 at ⁋⁋ 3, 6.]

1. Claim 1

a. [1.1] An apparatus comprising

351. In my opinion, the Fuma E-Cigarette is an apparatus, as shown below.

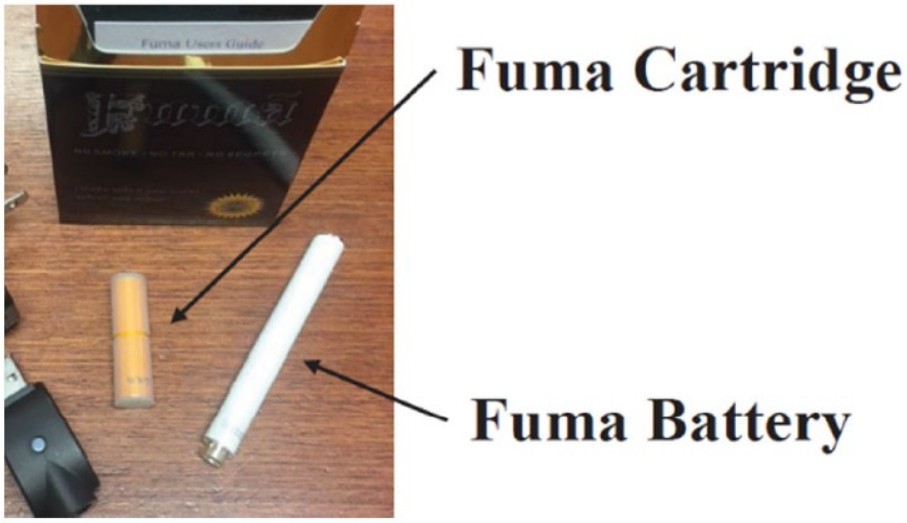

EX2030, Fig. 2

b. [1.2] a power source, wherein the power source includes a battery, wherein the power source includes an electrically conductive portion; and

352. In my opinion, the Fuma E-Cigarette comprises a cartridge that practices claim limitation [1.2]. The power source (*i.e.*, battery) includes an electrically conductive portion, as shown below.

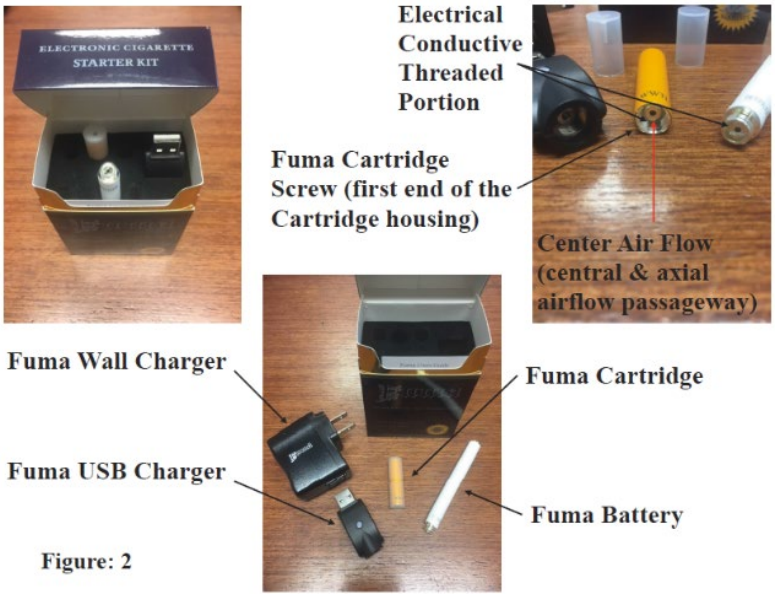

EX2030, Fig. 2

c. [1.3] a cartridge having a housing that comprises an interior, wherein the housing includes a first end and a second end that is opposite the first end, wherein the housing includes a first

aperture on the first end and a second aperture on the second end

353. In my opinion, the Fuma E-Cigarette comprises a cartridge that practices claim limitation [1.3]. The housing corresponds to the exterior structure of the e-cigarette cartridge shown below and includes a first aperture on the first end and a second aperture on the second end.

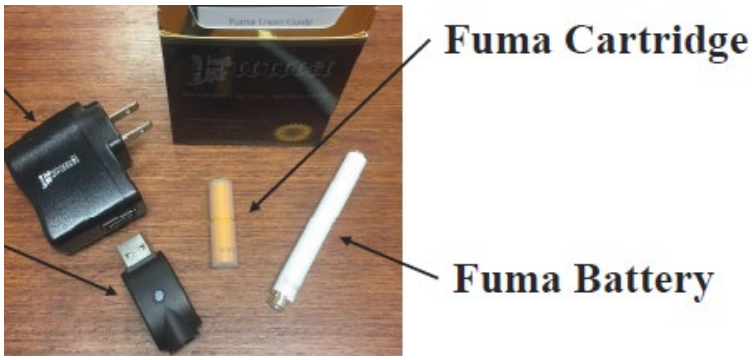

EX2030, Fig. 2

NJOY Exhibit 2022.203
Juul v. NJOY
IPR2024-00161

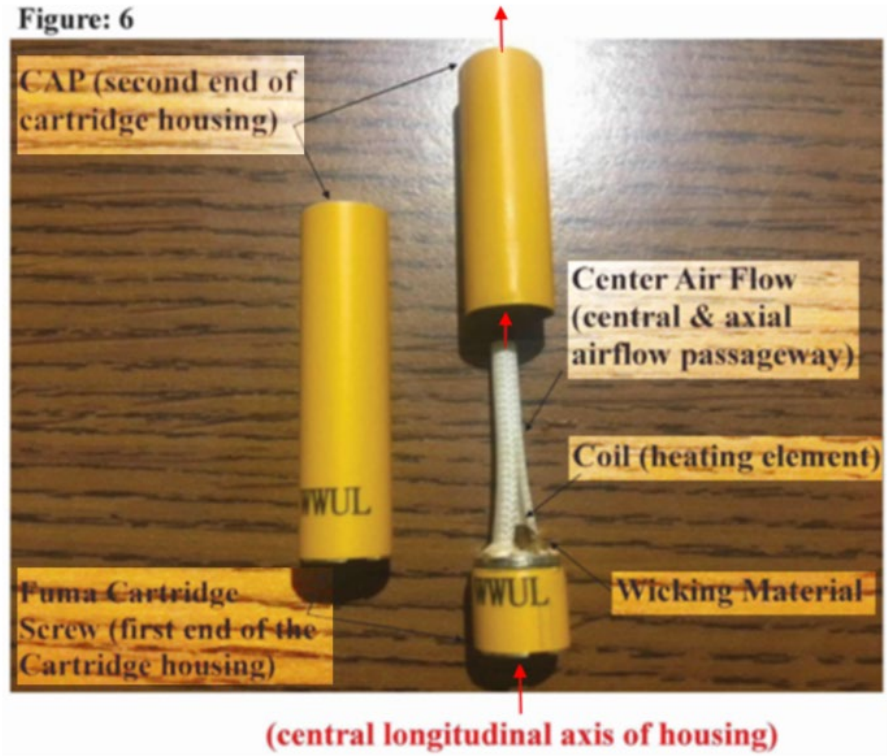

EX2030, Fig. 6 (annotated)

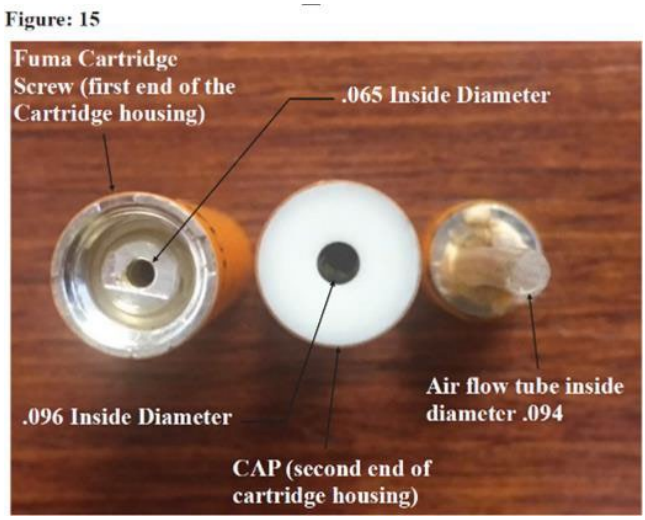

EX2030, Fig. 15

d. [1.4] wherein the housing includes an airflow passageway that extends centrally and axially with respect to the housing intermediate of the first aperture on the first end of the housing and the second aperture on the second end of the housing, wherein the airflow passageway is configured to allow an airflow through the cartridge from the first aperture to the second aperture of the housing,

354. In my opinion, the Fuma E-Cigarette comprises a cartridge that practices claim limitation [1.4]. The photo below shows the airflow passageway that extends centrally and axially. This passageway extends from the first aperture to the second aperture.

EX2030, Fig. 3

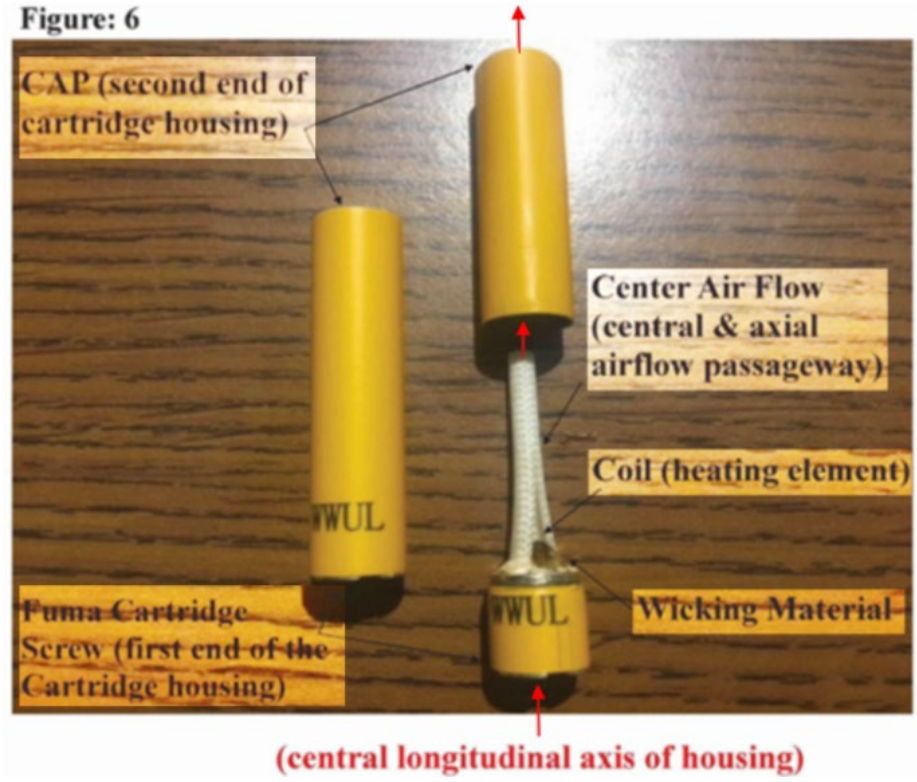

EX2030, Fig. 6 (annotated)

e. [1.5] wherein the first end of the housing includes an electrically conductive portion that is adapted to mechanically and electrically couple to the electrically conductive portion of the power source,

355. In my opinion, the Fuma E-Cigarette comprises a cartridge that practices claim limitation [1.5]. The first end of the housing mechanically and electrically couples to the electrically conductive portion of the power source, as shown below.

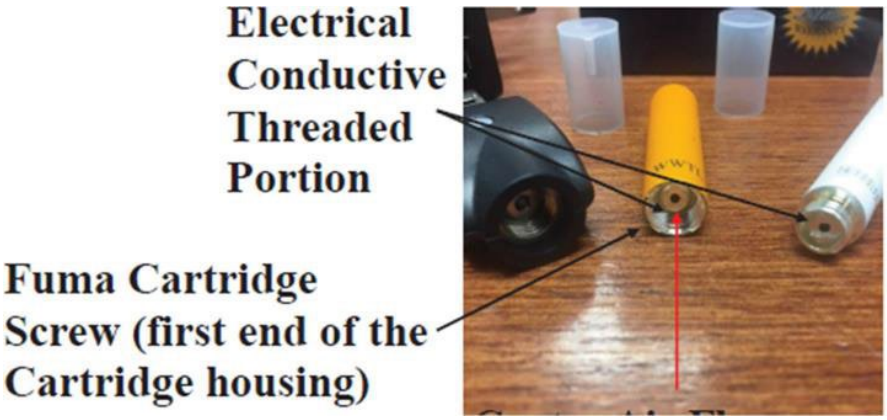

EX2030, Fig. 2

f. [1.6] wherein the housing includes a solution holding medium adapted to hold a solution in the interior of the housing,

356. In my opinion, the Fuma E-Cigarette comprises a cartridge that practices claim limitation [1.6]. The housing includes a solution holding medium, as shown below.

Figure: 7

EX2030, Fig. 7

g. [1.7] wherein the housing includes a heating element located in the interior of the housing, wherein the heating element extends transversely across the airflow passageway, wherein the airflow through the passageway passes on both transverse sides of the element,

357. In my opinion, the Fuma E-Cigarette comprises a cartridge that practices claim limitation [1.7]. The transverse heating element inside the housing is shown in the photo below. Furthermore, heating element extends transversely across the airflow passageway such that the air flows on both transverse sides of the heating element.

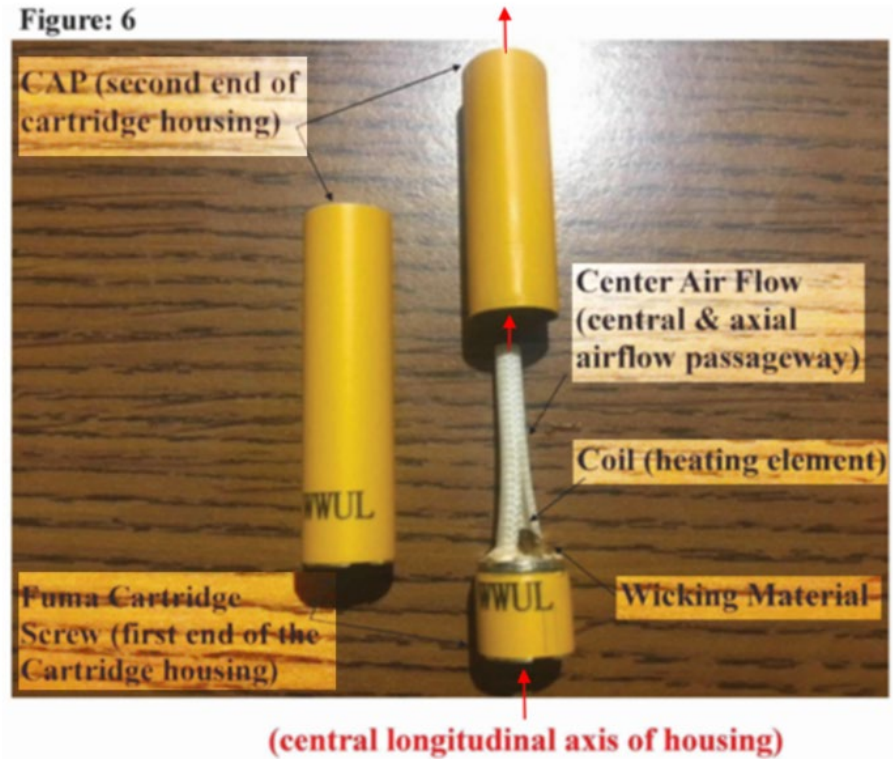

EX2030, Fig. 6 (annotated)

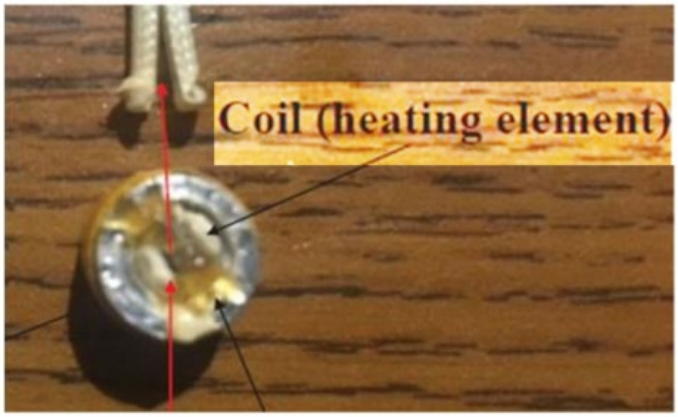

EX2030, Fig. 13

EX2030, Fig. 11

h. [1.8] wherein the solution holding medium surrounds the airflow passageway and the heating element in the interior of the housing and intermediate of the first end and the second end,

358. In my opinion, the Fuma E-Cigarette comprises a cartridge that practices claim limitation [1.8]. As shown below, the solution holding medium surrounds the airflow passageway and the heating element.

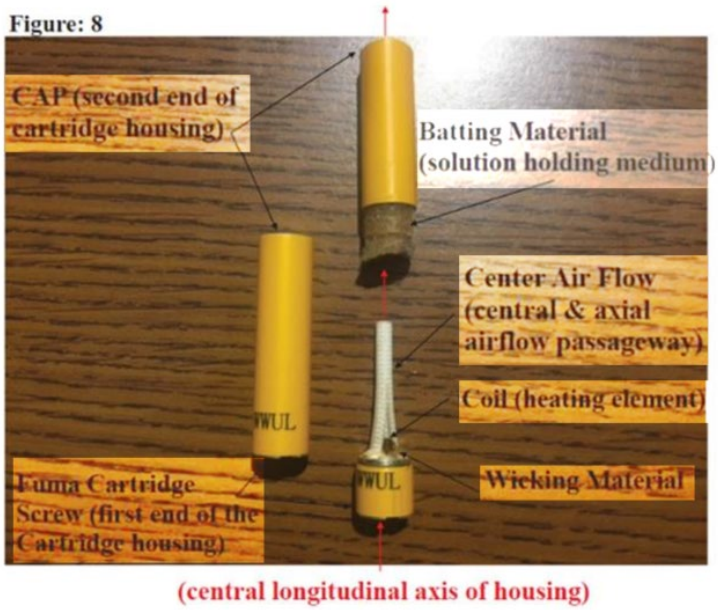

EX2030, Fig. 8

i. [1.9] wherein the heating element is electrically configured to vaporize at least a portion of the solution to be contained in the solution holding medium for oral provision to an individual in an airflow from the second aperture responsive to electrical power received from the battery through the electrically conductive portions of the cartridge and the power source.

359. In my opinion, the Fuma E-Cigarette comprises a cartridge that practices claim limitation [1.9]. The components that provide the electrical power to the heating element are shown in the photos below. Furthermore, like any functioning e-cigarette, the device vaporizes a solution when the heater is turned on. And, the generated vapor flows into the mouth of the adult consumer.

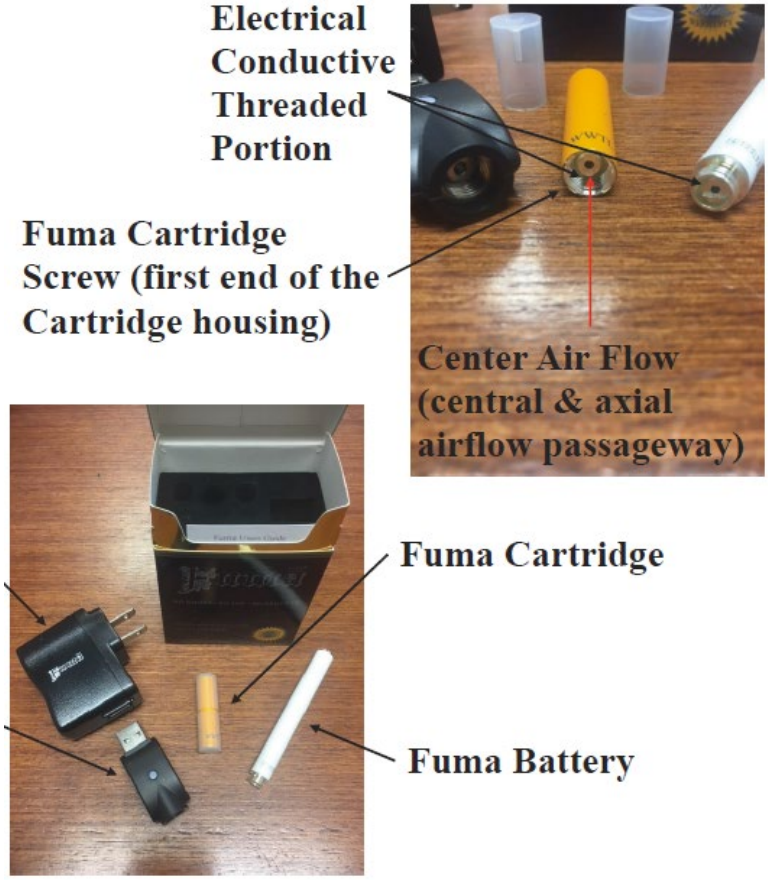
Electrical Conductive Threaded Portion
Fuma Cartridge Screw (first end of the Cartridge housing)
Center Air Flow (central & axial airflow passageway)
Fuma Cartridge
Fuma Battery

EX2030, Fig. 2

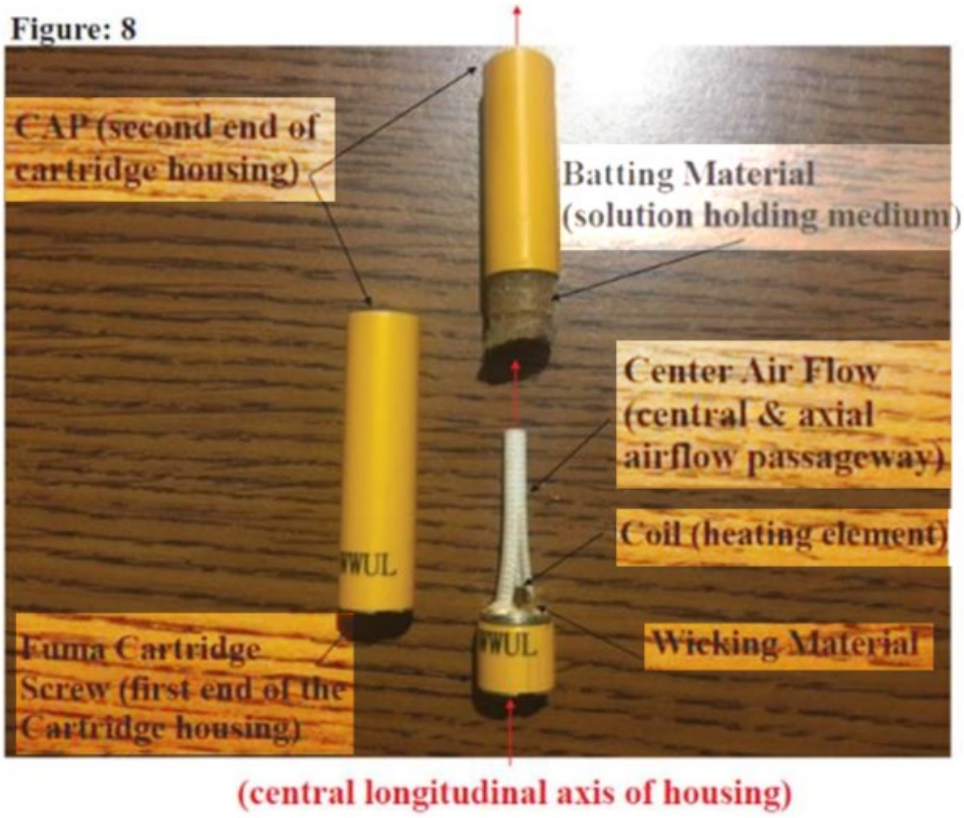
Figure: 8
CAP (second end of cartridge housing)
Batting Material (solution holding medium)
Center Air Flow (central & axial airflow passageway)
Coil (heating element)
Wicking Material
Fuma Cartridge Screw (first end of the Cartridge housing)
(central longitudinal axis of housing)

EX2030, Fig. 8

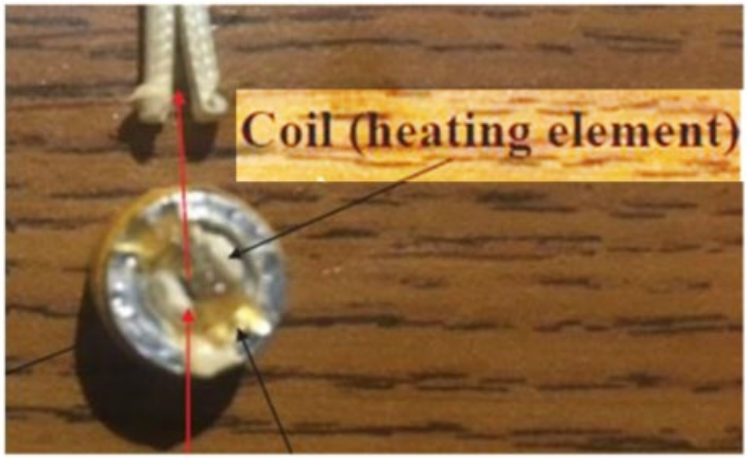
Coil (heating element)

EX2030, Fig. 13

2. Claim 2

360. In my opinion, the Fuma E-Cigarette comprises "[t]he cartridge of claim 1, wherein the heating element is a coil having a maximum diameter, the airflow passageway having a length having a circular cross section having a diameter along a majority of the length, the maximum diameter of the coil being smaller than the diameter of the circular cross section of the length of the airflow passageway." The heating element (*i.e.*, coil) and airflow passageway are shown below, with the diameter of the heating element (.062) being smaller than the diameter of the cross-sectional area of the airflow passageway (.094).

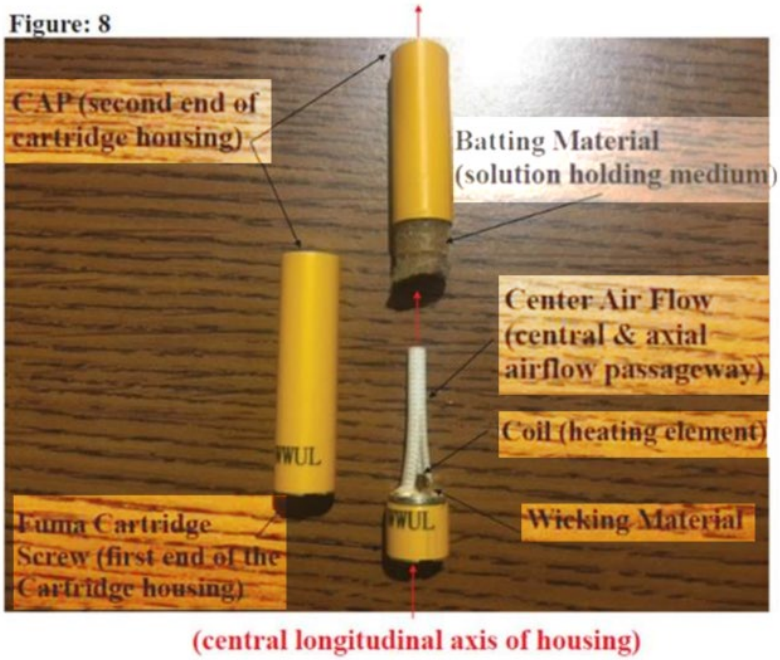

EX2030, Fig. 8

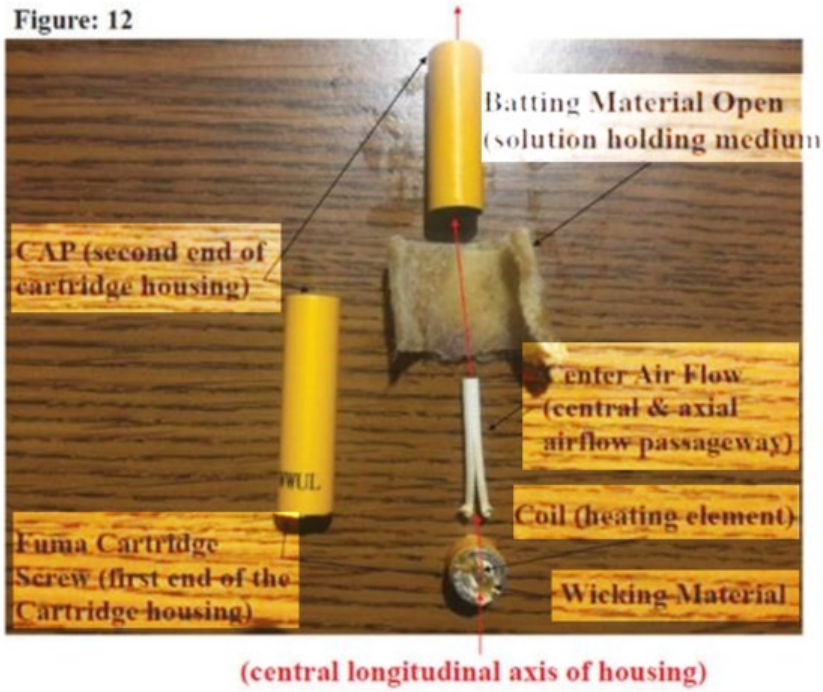

EX2030, Fig. 12

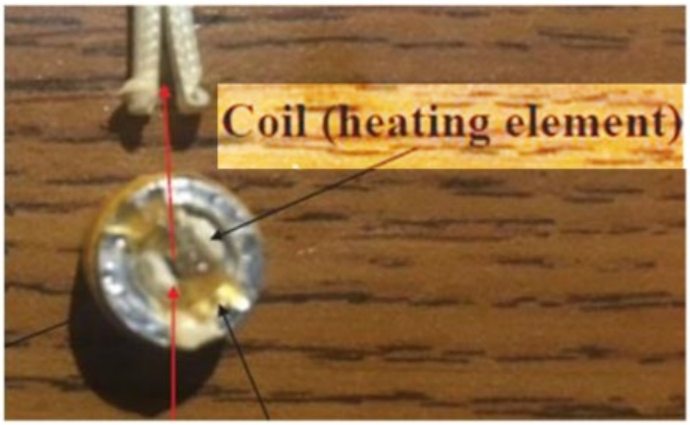

EX2030, Fig. 13

Figure: 14

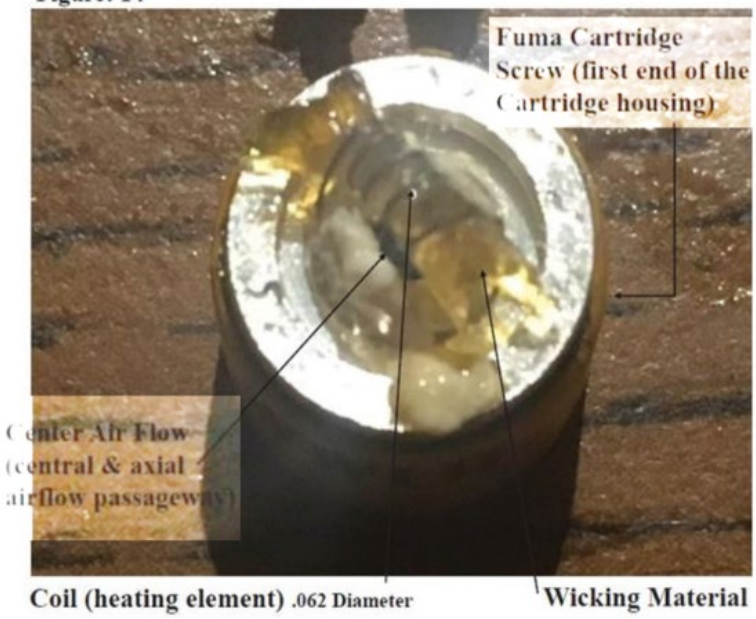

EX2030, Fig. 14

Figure: 15

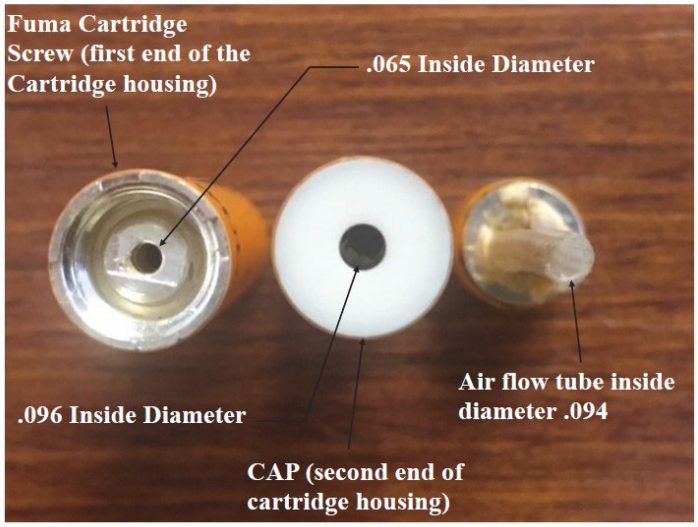

EX2030, Fig. 15

3. Claim 3

361. In my opinion, the Fuma E-Cigarette comprises, "[t]he cartridge of claim 2, wherein the first aperture on the first end is located centrally and axially with respect to the housing, the first aperture having a cross-sectional area measured perpendicular to a central longitudinal axis of the housing, the interior of the airflow passageway between the heating element and the second aperture being no smaller in cross-sectional area than the cross-sectional area of the first aperture." As shown below, the first aperture on the first end is central and axial and the cross-sectional area of the first aperture (diameter of .065, area = .0033) is smaller than the cross-sectional area of the second aperture (diameter of .096, area = .0072).

Figure: 15

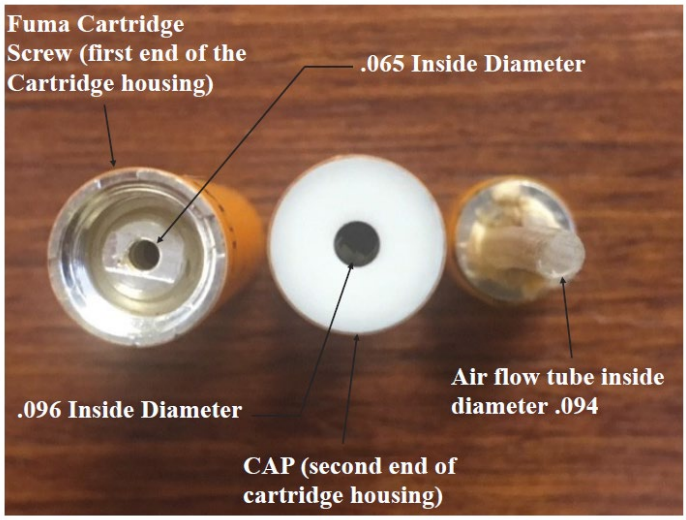

EX2030, Fig. 15

4. Claim 4

362. In my opinion, the Fuma E-Cigarette comprises, "[t]he cartridge of claim 3, wherein the first aperture on the first end is smaller than the second aperture on the second end." As shown below, the first aperture on the first end (diameter of .065) is smaller than the second aperture on the second end (diameter of .096).

Figure: 7

EX2030, Fig. 7

Figure: 15

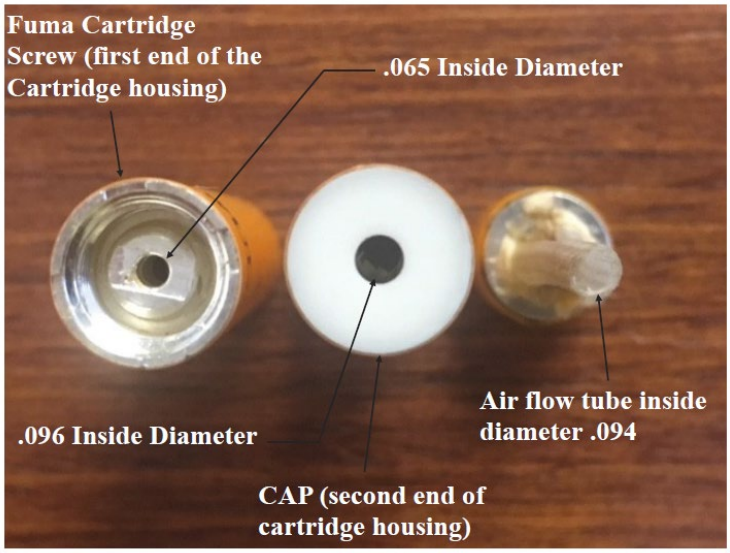

EX2030, Fig. 15

5. Claim 5

363. In my opinion, the Fuma E-Cigarette comprises "[t]he cartridge of claim 1, wherein the solution holding medium includes at least one of an absorbent material and a reservoir." The solution holding medium is shown below.

Figure: 7

EX2030, Fig. 7

6. Claim 6

364. In my opinion, the Fuma E-Cigarette comprises, "[t]he cartridge of claim 1, further comprising a solution in the solution holding medium, the solution comprising one of propylene glycol and nicotine." As shown in the photo below, the Fuma E-Cigarette is an e-cigarette cartridge comprising a solution in the solution holding medium. The solution comprises propylene glycol and nicotine. EX2023 at ¶ 7.

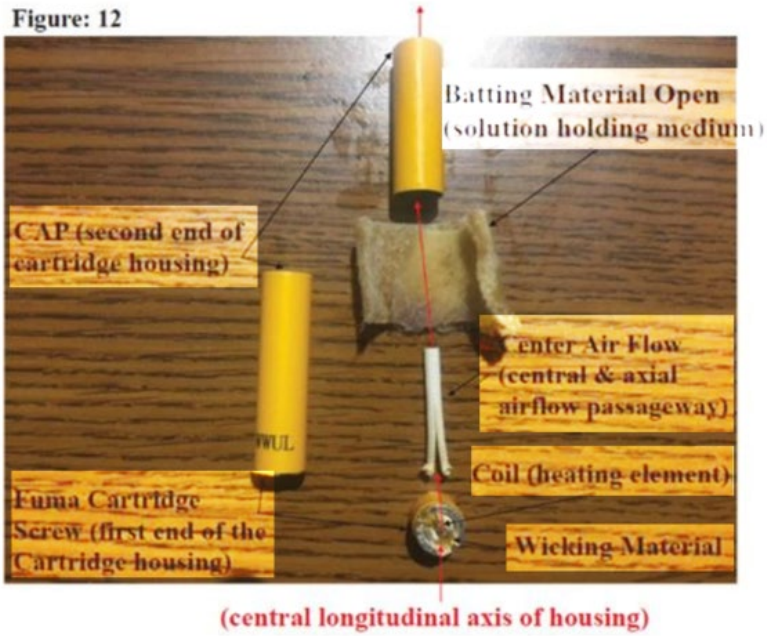

EX2030, Fig. 12

7. Claim 7

365. In my opinion, the Fuma E-Cigarette comprises, "[t]he cartridge of claim 1, wherein the airflow passageway has a uniform cross-sectional area measured perpendicular to a central longitudinal axis of the housing between the heating element and the second aperture." As shown below, the airflow passageway extends between the heating element and the second aperture, and the airflow passageway has a uniform cross-sectional area.

EX2030, Fig. 16

Figure: 15

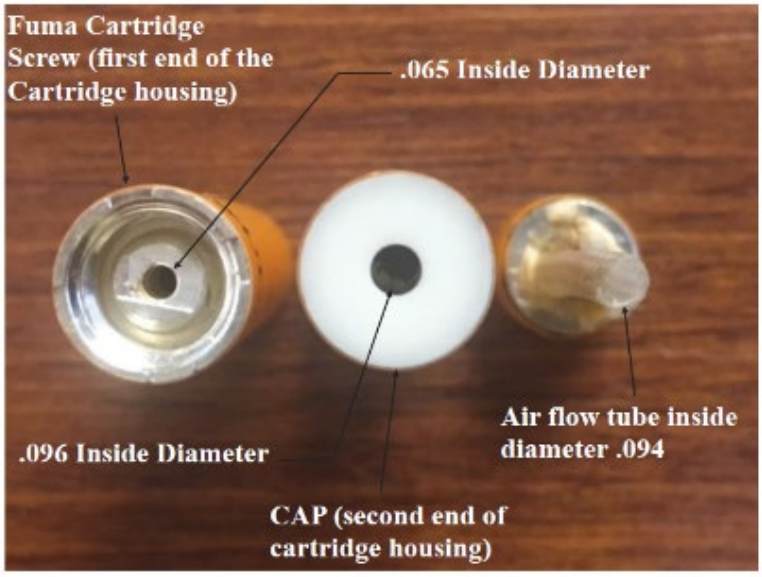

EX2030, Fig. 15

8. Claim 8

a. [8.1] A cartridge configured to mechanically and electrically couple to a power source of an electronic vaporizer, the cartridge comprising:

366. In my opinion, the Fuma E-Cigarette comprises a cartridge that practices claim limitation [8.1]. As shown below, the Fuma E-Cigarette comprises a cartridge configured to mechanically and electrically couple to a power source.

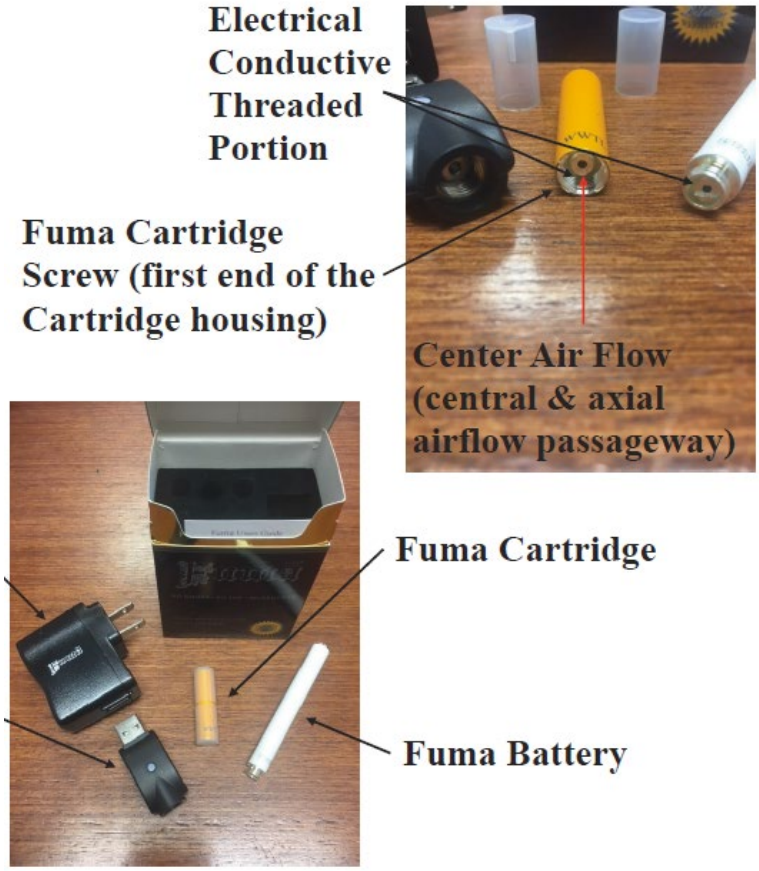

EX2030, Fig. 2

b. [8.2] a housing having an interior and a solution holding medium reservoir adapted to hold a solution,

367. In my opinion, the Fuma E-Cigarette comprises a cartridge that practices claim limitation [8.2]. As shown below, the housing corresponds to the exterior structure of the e-cigarette cartridge and includes a solution holding medium.

Figure: 7

EX2030, Fig. 7

c. [8.3] the housing having a first end and a second end that is opposite the first end, the housing

having a first aperture on the first end and a second aperture on the second end,

368. In my opinion, the Fuma E-Cigarette comprises a cartridge that practices claim limitation [8.3]. *See* analysis above regarding claim limitation [1.3].

d. [8.4] the first end of the housing having an electrically conductive portion adapted to mechanically and electrically couple to the electrically conductive portion of the power source;

369. In my opinion, the Fuma E-Cigarette comprises a cartridge that practices claim limitation [8.4]. *See* analysis above regarding claim limitation [1.5].

e. [8.5] an airflow passageway in the interior of the housing extending centrally and axially with respect to the housing intermediate of the first aperture on the first end of the housing and the second aperture on the second end of the housing, the airflow passageway being configured to allow an airflow through the cartridge from the first aperture to the second aperture of the housing; and

370. In my opinion, the Fuma E-Cigarette comprises a cartridge that practices claim limitation [8.5]. *See* analysis above regarding claim limitation [1.4].

f. [8.6] a heating element located in the interior of the housing, the heating element being located within and extending transversely across the airflow passageway, the airflow

NJOY Exhibit 2022.225
Juul v. NJOY
IPR2024-00161

through the passageway passing on both transverse sides of the heating element,

371. In my opinion, the Fuma E-Cigarette comprises a cartridge that practices claim limitation [8.6]. *See* analysis above regarding claim limitation [1.7].

g. [8.7] both the heating element and the airflow passageway being surrounded by the solution holding medium reservoir,

372. In my opinion, the Fuma E-Cigarette comprises a cartridge that practices claim limitation [8.7]. *See* analysis above regarding claim limitation [1.8].

h. [8.8] the heating element being electrically configured to vaporize at least a portion of the solution to be contained in the solution holding medium reservoir for oral provision to an individual in an airflow from the second aperture responsive to electrical power received from the battery through the electrically conductive portions of the cartridge and the power source.

373. In my opinion, the Fuma E-Cigarette comprises a cartridge that practices claim limitation [8.8]. *See* analysis above regarding claim limitation [1.9].

9. Claim 9

374. In my opinion, the Fuma E-Cigarette comprises, "[t]he cartridge of claim 8, further in combination with the power source including a battery and the electrically conductive portion, the electrically conductive portion of the power source being mechanically and electrically coupled to the electrically conductive

NJOY Exhibit 2022.226
Juul v. NJOY
IPR2024-00161

portion of the first end of the housing." *See* analysis above regarding claim limitations [1.2], [1.5].

10. Claim 10

375. In my opinion, the Fuma E-Cigarette comprises, "[t]he cartridge of claim 9, wherein the heating element is a coil having a maximum diameter, the airflow passageway having a length having a circular cross section having a diameter along a majority of the length, the maximum diameter of the coil being smaller than the diameter of the circular cross section of the length of the airflow passageway." *See* analysis above regarding claim 2.

11. Claim 11

376. In my opinion, the Fuma E-Cigarette comprises, "[t]he cartridge of claim 10, wherein the first aperture on the first end is located centrally and axially with respect to the housing, the first aperture having a cross-sectional area measured perpendicular to a central longitudinal axis of the housing, the interior of the airflow passageway between the heating element and the second aperture being no smaller in cross-sectional area than the cross-sectional area of the first aperture." *See* analysis above regarding claim 3.

12. Claim 12

377. In my opinion, the Fuma E-Cigarette comprises, "[t]he cartridge of claim 11, wherein the first aperture on the first end is smaller than the second aperture on the second end." *See* analysis above regarding claim 4.

13. Claim 13

378. In my opinion, the Fuma E-Cigarette comprises, "[t]he cartridge of claim 8, wherein the solution holding medium reservoir includes an absorbent material." As shown below, the cartridge comprises a solution holding medium reservoir that includes an absorbent batting material.

Figure: 7

EX2030, Fig. 7

14. Claim 14

379. In my opinion, the Fuma E-Cigarette comprises, "[t]he cartridge of claim 8, further comprising a solution in the solution holding medium reservoir, the solution comprising one of propylene glycol and nicotine." *See* analysis above regarding claim 6.

15. Claim 15

380. In my opinion, the Fuma E-Cigarette comprises, "[t]he cartridge of claim 8, wherein the airflow passageway has a uniform cross-sectional area measured perpendicular to a central longitudinal axis of the housing between the heating element and the second aperture." *See* analysis above regarding claim 7.

16. Claim 16

a. [16.1] A cartridge configured to mechanically and electrically couple to a power source of an electronic vaporizer, the cartridge comprising:

381. In my opinion, the Fuma E-Cigarette comprises a cartridge that practices claim limitation [16.1]. *See* analysis above regarding claim limitation [8.1].

b. [16.2] a housing having an interior and a solution holding medium adapted to hold a solution in the interior of the housing,

382. In my opinion, the Fuma E-Cigarette comprises a cartridge that practices claim limitation [16.2]. *See* analysis above regarding claim limitations [1.3] and [1.6].

c. [16.3] the housing having a first end and a second end that is opposite the first end, the housing having a central longitudinal axis extending through the first end and the second end,

383. In my opinion, the Fuma E-Cigarette comprises a cartridge that practices claim limitation [16.3]. *See* analysis above regarding claim limitations [1.3] and [1.6].

d. [16.4] the housing having a first aperture on the first end and a second aperture on the second end, the first aperture having a cross-sectional area measured perpendicular to the central longitudinal axis of the housing,

384. In my opinion, the Fuma E-Cigarette comprises a cartridge that practices claim limitation [16.4]. *See* analysis above regarding claim limitation [1.3] (housing having first aperture and second aperture) and claim 3 (first aperture having a cross- sectional area).

e. [16.5] the first end of the housing having an electrically conductive portion adapted to mechanically and electrically couple to an electrically conductive portion of the power source;

385. In my opinion, the Fuma E-Cigarette comprises a cartridge that practices claim limitation [16.5]. *See* analysis above regarding claim limitation [1.5].

f. [16.6] an airflow passageway in the interior of the housing, the airflow passageway having a

length extending centrally and axially with respect to the housing intermediate of the first aperture on the first end of the housing and the second aperture on the second end of the housing, the airflow passageway being configured to allow an airflow through the cartridge from the first aperture to the second aperture of the housing,

386. In my opinion, the Fuma E-Cigarette comprises a cartridge that practices claim limitation [16.6]. *See* analysis above regarding claim limitation [1.4].

g. [16.7] the airflow passageway having an exterior adjacent to the solution holding medium along a majority of the length of the airflow passageway, the airflow passageway having an interior having a uniform cross-sectional area measured perpendicular to the central longitudinal axis of the housing and extending continuously along a majority of the length of the airflow passageway; and

387. In my opinion, the Fuma E-Cigarette comprises a cartridge that practices claim limitation [16.7]. As shown below, airflow passageway has an exterior adjacent to the solution holding medium along a majority of the length of the airflow passageway and has a uniform cross-sectional area.

Figure: 9

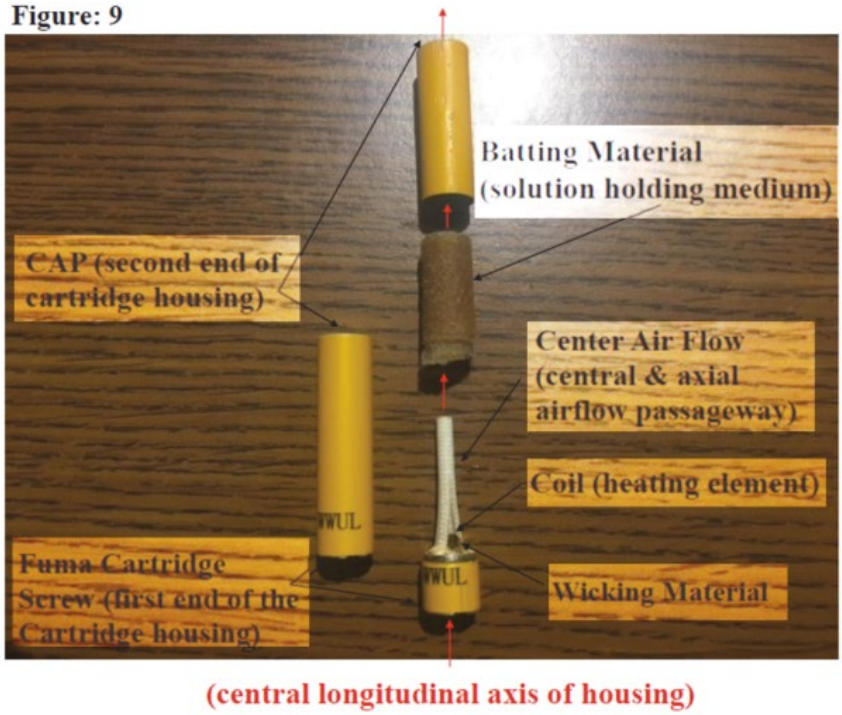

EX2030, Fig. 9

Figure: 15

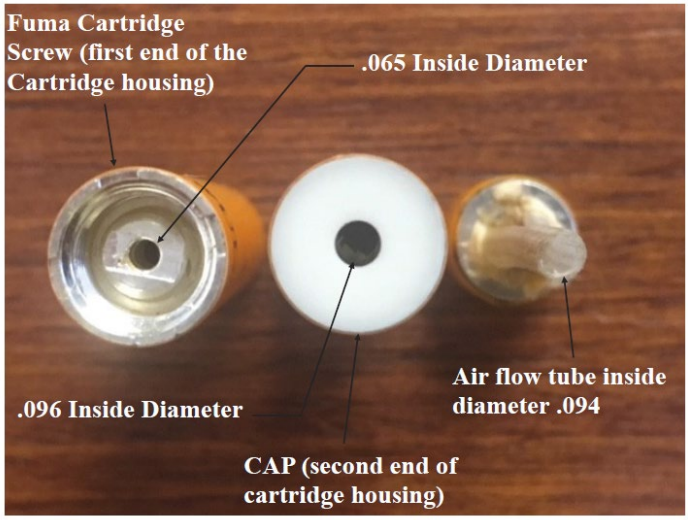

EX2030, Fig. 15

EX2030, Fig. 16

h. [16.8] a heating element located in the interior of the housing and extending transversely across the airflow passageway, the airflow through the passageway passing on both transverse sides of the heating element, a plane perpendicular to the central longitudinal axis of the housing passing through the heating element and the solution holding medium,

388. In my opinion, the Fuma E-Cigarette comprises a cartridge that practices claim limitation [16.8]. As shown below, the heating element extends transversely across the airflow passageway such that the air would flow on both transverse sides of the heating element.

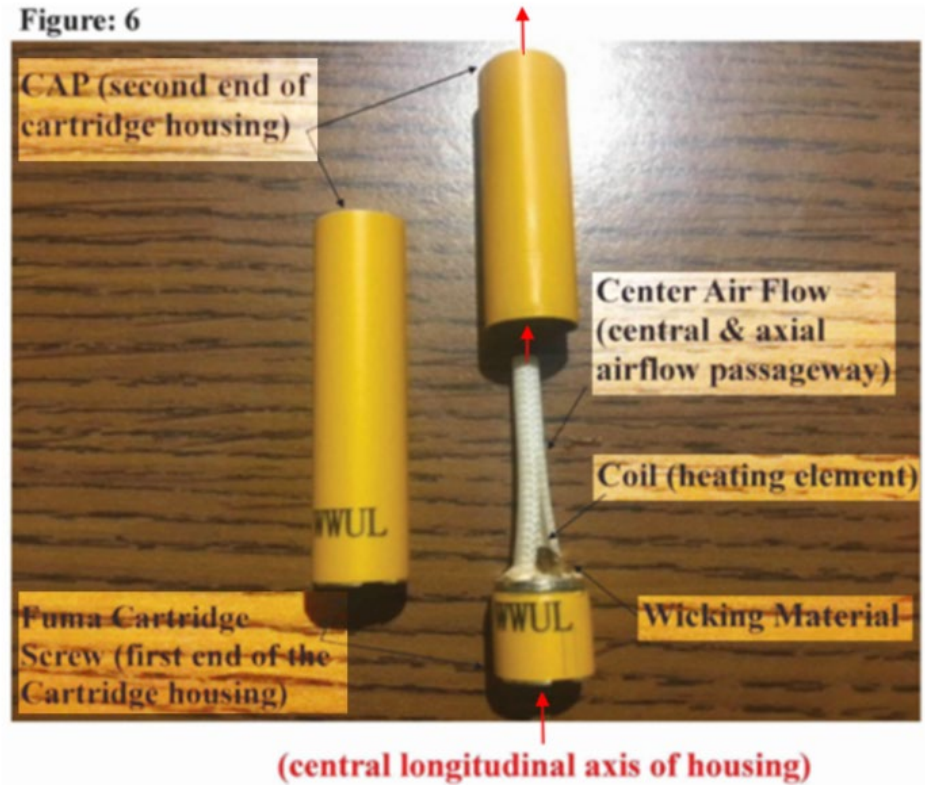

EX2030, Fig. 6 (annotated)

Figure: 7

EX2030, Fig. 7

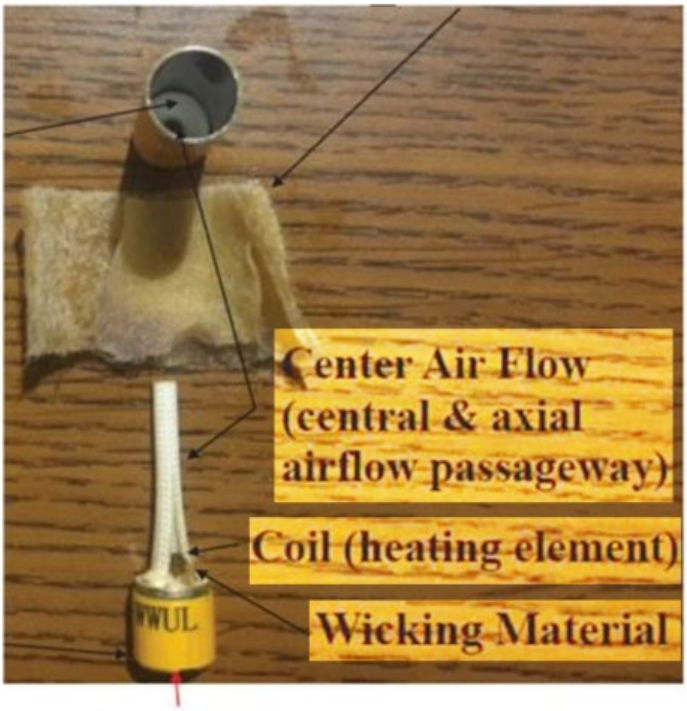

EX2030, Fig. 11

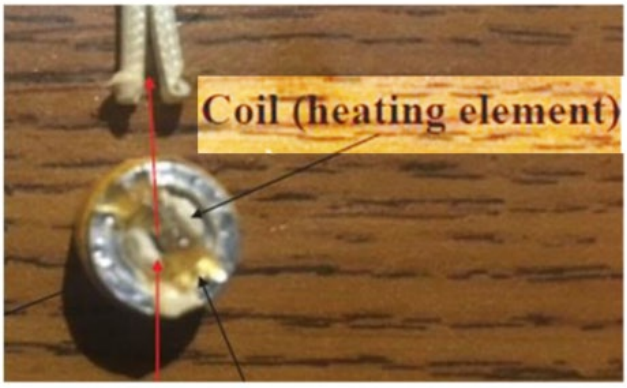

EX2030, Fig. 13

i. [16.9] the airflow passageway having an interior between the heating element and the second aperture no smaller in cross-sectional

area than the cross-sectional area of the first aperture,

389. In my opinion, the Fuma E-Cigarette comprises a cartridge that practices claim limitation [16.9]. *See* analysis above regarding claim 3.

j. [16.10] the heating element being connected to the electrically conductive portion of the first end of the housing, the heating element being electrically configured to vaporize at least a portion of the solution to be contained in the solution holding medium for oral provision to an individual in an airflow from the second aperture responsive to electrical power received from the power source through the electrically conductive portion of the cartridge.

390. In my opinion, the Fuma E-Cigarette comprises a cartridge that practices claim limitation [16.10]. The components that provide the electrical power to the heating element are shown in the photo below. Furthermore, like any functioning e-cigarette, the device vaporizes a solution when the heater is turned on. And, the generated vapor flows into the mouth of the adult consumer.

NJOY Exhibit 2022.237
Juul v. NJOY
IPR2024-00161

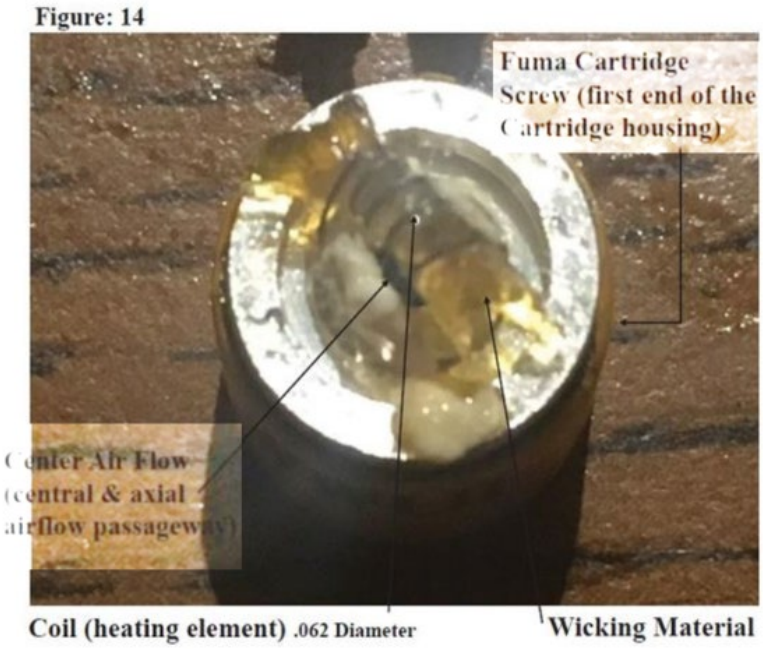

EX2030, Fig. 14

17. Claim 17

391. In my opinion, the Fuma E-Cigarette comprises, "[t]he cartridge of claim 16, further in combination with the power source including a battery and the electrically conductive portion, the electrically conductive portion of the power source being mechanically and electrically coupled to the electrically conductive portion of the first end of the housing." *See* analysis above regarding claim limitations [1.2], [1.5].

18. Claim 18

392. In my opinion, the Fuma E-Cigarette comprises, "[t]he cartridge of claim 16, wherein the heating element is a coil having a maximum

diameter and the uniform cross-sectional area of the airflow passageway is a circle having a diameter, the maximum diameter of the coil being smaller than the diameter of the circle of the uniform cross-sectional area of the airflow passageway." The heating element (*i.e.*, coil) and uniform airflow passageway are shown below, with the diameter of the heating element (.062) being smaller than the diameter of the cross-sectional area of the airflow passageway (.094).

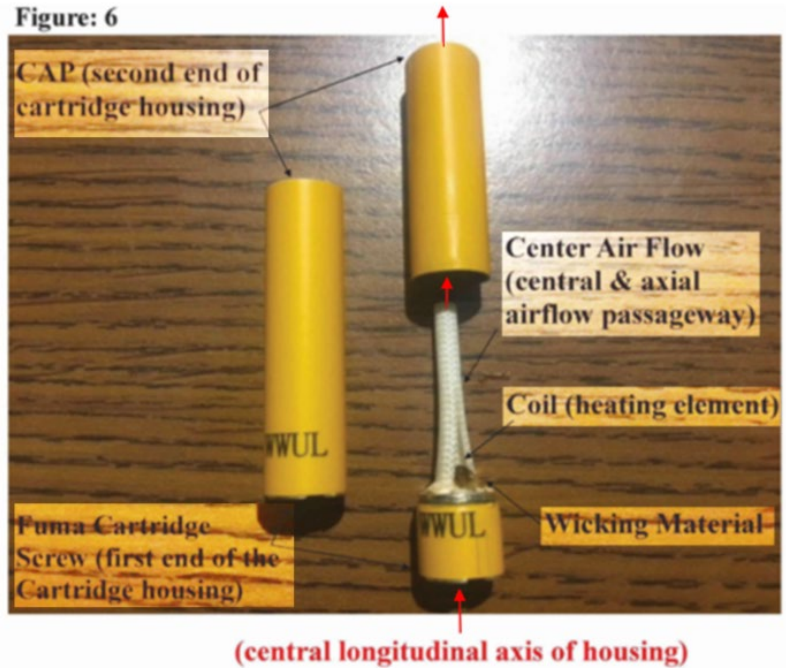

EX2030, Fig. 6 (annotated)

Figure: 14

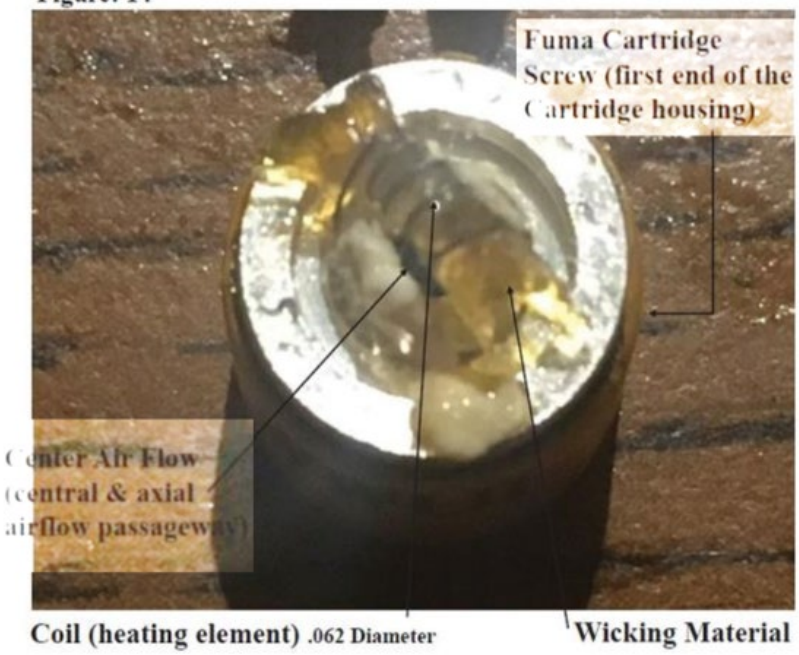

EX2030, Fig. 14

Figure: 15

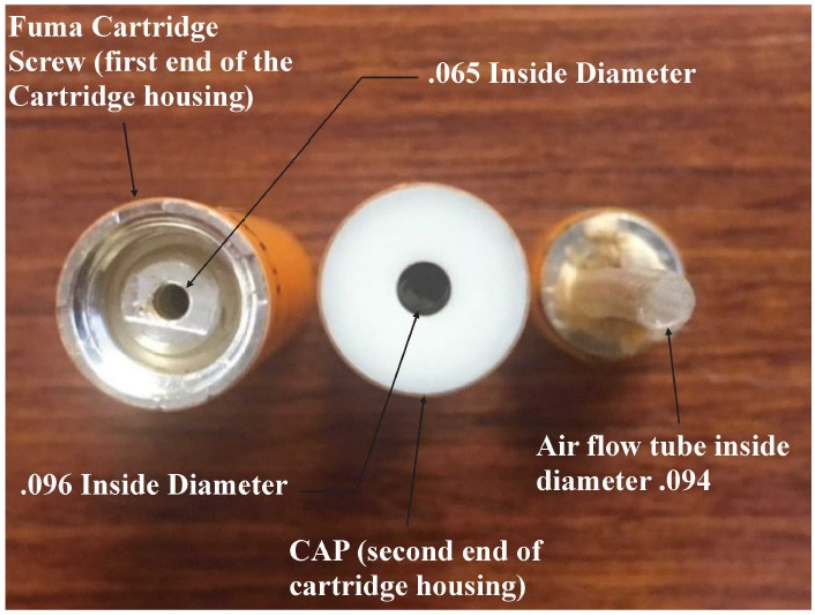

EX2030, Fig. 15

19. Claim 19

393. In my opinion, the Fuma E-Cigarette comprises, "[t]he cartridge of claim 18, wherein the first aperture on the first end is located centrally and axially with respect to the housing." *See* analysis above regarding claim 3.

20. Claim 20

394. In my opinion, the Fuma E-Cigarette comprises, "[t]he cartridge of claim 19, wherein the first aperture on the first end is smaller than the second aperture on the second end." *See* analysis above regarding claim 4.

21. Claim 21

395. In my opinion, the Fuma E-Cigarette comprises, "[t]he cartridge of claim 16, wherein the heating element is a coil having a maximum diameter and the uniform cross-sectional area of the airflow passageway is a circle having a diameter, the maximum diameter of the coil being smaller than the diameter of the circle of the uniform cross-sectional area of the airflow passageway." *See* analysis above regarding claim 18.

22. Claim 22

396. In my opinion, the Fuma E-Cigarette comprises, "[t]he cartridge of claim 16, wherein the first aperture on the first end is located centrally and axially with respect to the housing." *See* analysis above regarding claim 3.

23. Claim 23

397. In my opinion, the Fuma E-Cigarette comprises, "[t]he cartridge of claim 16, wherein the first aperture on the first end is smaller than the second aperture on the second end." *See* analysis above regarding claim 4.

24. Claim 24

398. In my opinion, the Fuma E-Cigarette comprises, "[t]he cartridge of claim 16, wherein the solution holding medium includes at least one of an absorbent material and a reservoir." *See* analysis above regarding claim 5.

25. Claim 25

399. In my opinion, the Fuma E-Cigarette comprises, "[t]he cartridge of claim 16, further comprising a solution, wherein the solution comprises one of propylene glycol and nicotine." *See* analysis above regarding claim 6.

26. Claim 26

400. In my opinion, the Fuma E-Cigarette comprises, "[t]he cartridge of claim 16, wherein the heating element is in operative connection with a wicking material, and the wicking material is operative to attract a portion of the solution from the solution holding medium located immediately adjacent opposite ends of the heating element toward the heating element." As shown below, the heating element is in operative connection with a wicking material that attracts a portion of

NJOY Exhibit 2022.242
Juul v. NJOY
IPR2024-00161

the solution in the solution holding medium to be drawn toward the heating element for vaporization.

EX2030, Fig. 11

27. Claim 27

401. In my opinion, the Fuma E-Cigarette comprises, "[t]he cartridge of claim 16, wherein the airflow passageway has a uniform cross-sectional area measured perpendicular to the central longitudinal axis of the housing between the heating element and the second aperture." *See* analysis above regarding claim 7.

C. Commercial Success

402. In my opinion, the evidence of Fuma's commercial success supports that the challenged claims are not obvious.

403. In 2009, Fuma began selling Fuma cartridges and starter kits. EX2023 at ⁋ 6; EX2024 at ⁋ 3. Sales of Fuma's cartridges and starter kits grew significantly from approximately $50,000 in 2009, to approximately $700,000 in 2010, and to approximately $2.7 million in 2011. EX2024 at ¶ 4. In 2012, Fuma's sales decreased to approximately $2.1 million as a result of competing e-cigarette products entering the market that copied Fuma's patented design, which is described below. EX2024 at ¶ 4; *see infra* Section VII.B. The sales of Fuma's cartridges and starter kits were a direct result of the claimed features of the 881 Patent, which, as described above, eliminated problematic issues in pre-existing devices and enhanced the adult consumer experience. EX2023 at ⁋ 7.

D. Industry Praise, Copying, and Licensing

404. In my opinion, the substantial evidence of industry praise, copying, and licensing of the claimed inventions of the 881 Patent supports that the challenged claims of the 881 Patent are not obvious.

405. In my opinion, the evidence shows that R.J. Reynolds Vapor Company ("RJRV") praised and intentionally copied the claimed invention of the 881 Patent.

406. On June 15, 2010, Dennis Potter, RJRV's VP of Strategic Innovations, sent an email to Greg Conley, co-inventor of the 881 Patent and co-founder of Fuma, indicating that part of Mr. Potter's role "is to search out and investigate promising

new technology and product technologies." EX2026.0002; EX2023 at ⁋ 8. On June 29, 2010, after RJRV received Fuma's e-cigarette, Mr. Potter stated in an internal RJRV email that "the [Fuma] product is unique in design and operation to the e-cigarette designs based on the Chinese models we have previously seen," "the Fuma product is simple, clean and very close to intuitive to use," "I see more potential in this product design than any of the others we have assessed to date," and "the 'magic' is primarily in the mouth piece/aerosolizer end which obviously contains both the liquid aerosol former and some form of heating element." EX2027.0002. On July 7, 2010, Mr. Potter sent another email to Greg Conley, stating that "Fuma is not the first vapor/aerosol product that we have looked at, but it generated the highest interest to date." EX2028.0002; EX2023 at ⁋ 9.

407. In an internal RJRV presentation, RJRV praised the design of the transverse heating element and central airflow in the "Fuma two piece e-cig,"[11] indicating that the Fuma product has a "[u]nique heavier gauge heating element" and "[n]ew central flow design," and "we currently believe [Fuma's product] may present one of the best ways forward for a Horizon 3 Platform." EX2032.0003, .0019. As shown below, this internal RJRV presentation included diagrams that

[11] The Fuma e-cigarette is a "two-piece e-cig" because it comprises two pieces: (1) a cartridge or cartomizer and (2) a battery portion.

depict these unique features of the Fuma product and a discussion of the potential for RJRV to develop an e-cigarette based on Fuma's patented design:

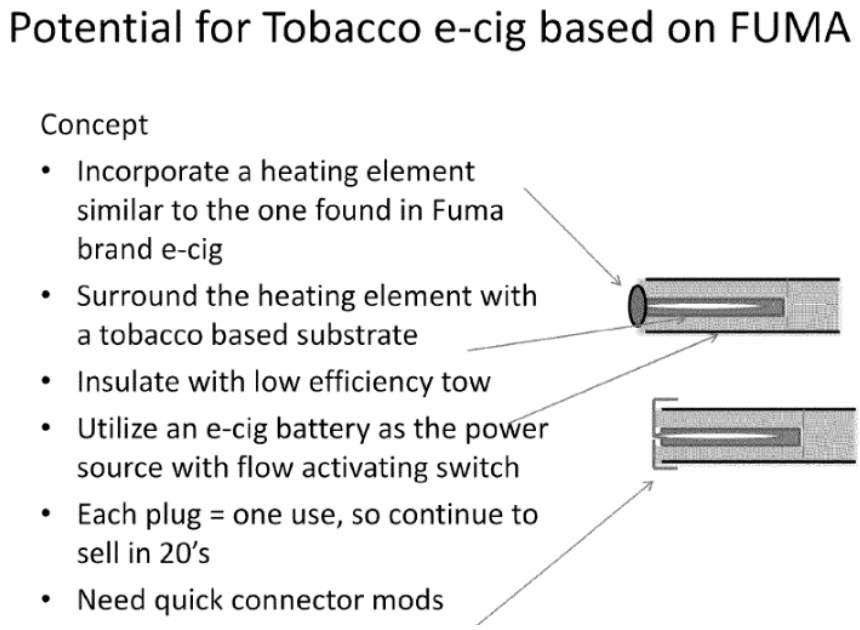

EX2032.0021

408. Years later, after praising and copying Fuma's patented invention, RJRV launched its VUSE Solo and VUSE Ciro e-cigarette products.

409. As shown below, the VUSE Solo includes a transverse heating element in an airflow passageway.

Heater Wick Assembly G2 Composite:	
The "Heater Wick Assembly G2 Composite" is a pre-assembled component composed of two sub-components: the wick and the heater coil. The wick is braided glass fiber through which the e-liquid travels. The heater is a coil of 36 AWG (American Wire Gauge) nichrome wire that wraps around the wick to form the heater coil. The heater aerosolizes the e-liquid.	

EX2036 at Table H-8

Figure H-14: Vuse Solo G1 Cartridge Air Flow Path

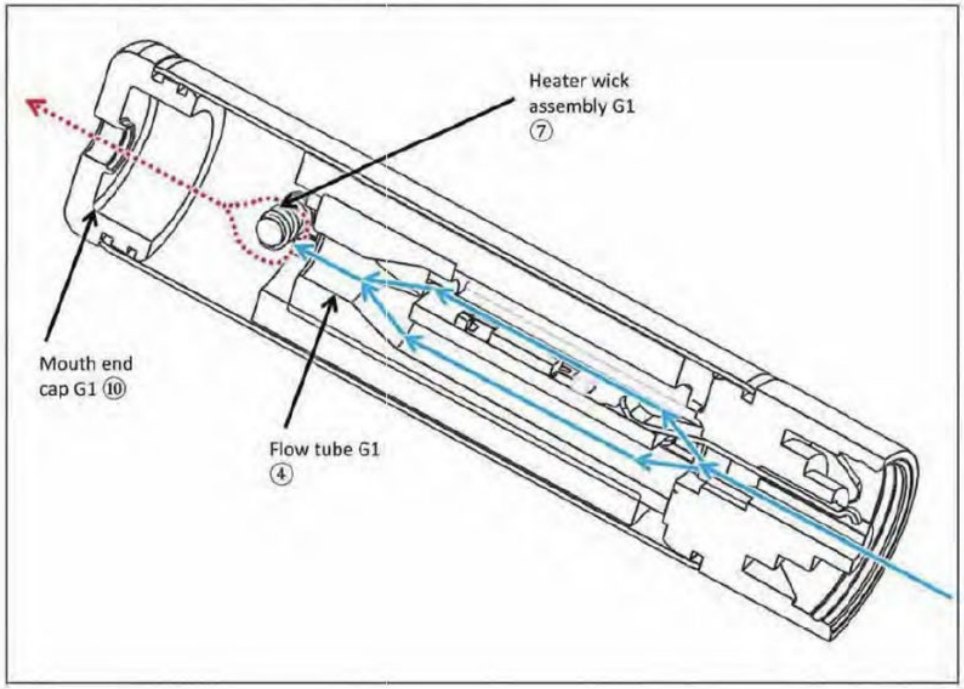

EX2036 at Fig. H-14

410. As shown below, the VUSE Ciro includes a transverse heating element in an airflow passageway.

Heater:	
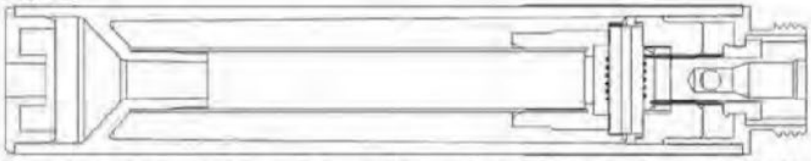	
The "Heater" is made from nichrome wire with nickel wire leads spot welded to each side. This component is wrapped around the ceramic wick to form a coil. The heater coil produces the heat required to vaporize the e-liquid.	

EX2033 at Table H-6

Figure H-12: Vuse Ciro Cartridge Air Flow Path

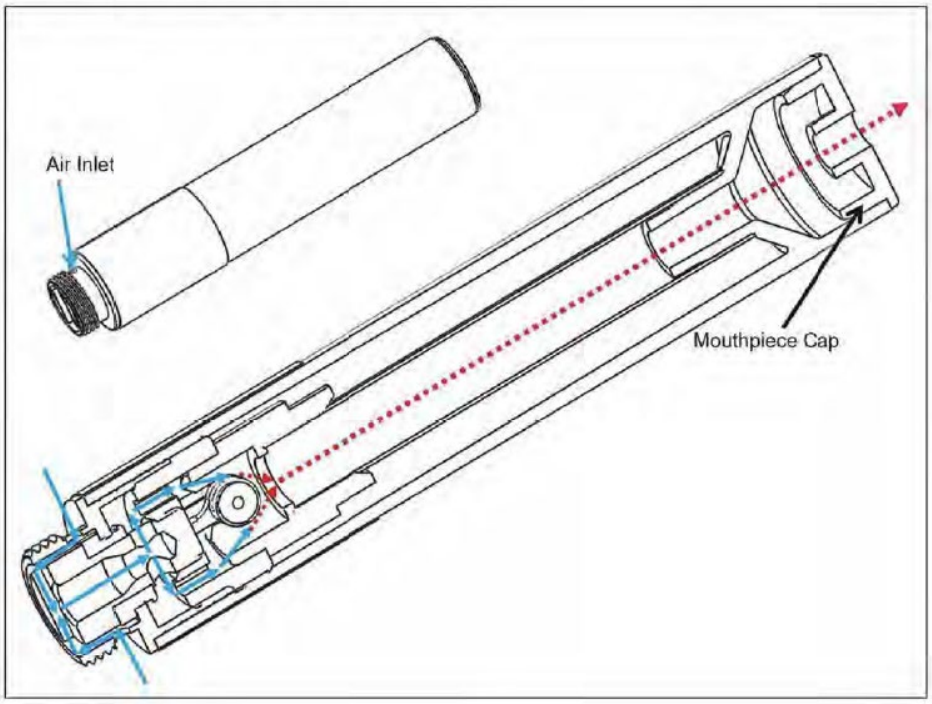

EX2033 at Fig. H-12

411. In 2019, Fuma sued RJRV for infringement, alleging that the VUSE Solo and VUSE Ciro copied its patented design. *Fuma Int'l LLC v. R.J. Reynolds Vapor Co.*, 1:19-cv-00260, D.I. 1 (Mar. 6, 2019). Thereafter, the parties entered into

a Settlement and License Agreement in order to resolve that litigation. EX2024 at ¶ 5. Currently, RJRV's patent marking website for its e-vapor products includes the 881 Patent. EX2035.0002, .0005.

412. After Fuma's E-Cigarette that embodies the claimed invention of the 881 Patent was commercialized in 2009, other companies similarly began to introduce e-cigarettes that had cartridges that included transverse heating elements in airflow passageways. In my opinion, this further demonstrates copying. For example, a Carmines Consulting Report from 2013 states that "[i]n the two-component products, the design is generally a horizontal orientation of the coil placed in a woven fiberglass tube" and includes photographs of thirty-three cartomizer-type cartridges that include a transverse heating element in an airflow passageway, some of which have an inverted "T" configuration and others of which have a "cross" configuration, as depicted below. EX2039.0011.

EX2039.0011

413. Below are examples of cartomizer-type cartridges in the Carmines Consulting Report that include a transverse heating element in an airflow passageway, which demonstrates that competitors copied Fuma's patented design:

Two Piece Device	Images from Carmines Consulting Report
Bloog	Vaporizer 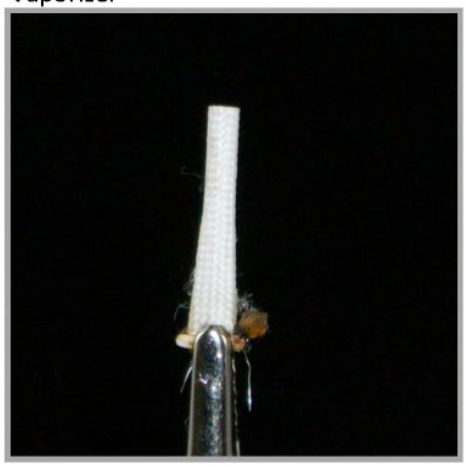 *Double wrapped inverted T* EX2039.0025
Bull Smoke Automatic	Vaporizer *Double wrapped inverted T* EX2039.0034

Cigarti	Vaporizer *Triple wrapped inverted T* EX2039.0040
Cigavette Premier	Vaporizer *Triple wrapped inverted T* EX2039.0043

Crown 7 LXE	Vaporizer 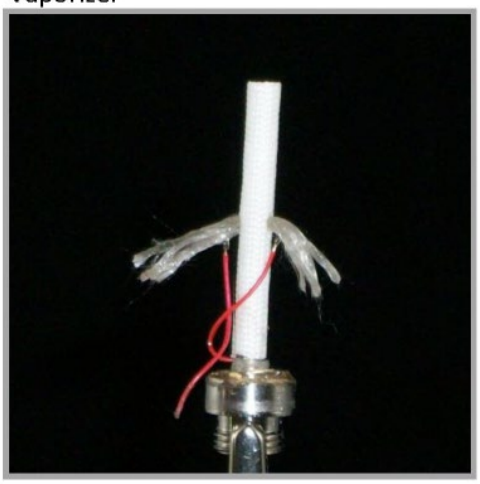 *Triple wrapped cross configuration* EX2039.0046	
Duo Pro	Vaporizer *Triple wrapped inverted T* EX2039.0049	

Eon Smoke	Vaporizer *Triple wrapped inverted T* EX2039.0058
ePuffer Colibri	Vaporizer *Triple wrapped cross* EX2039.0061

Eversmoke	Vaporizer *Double wrapped inverted T* EX2039.0067
Green Smoke	Vaporizer 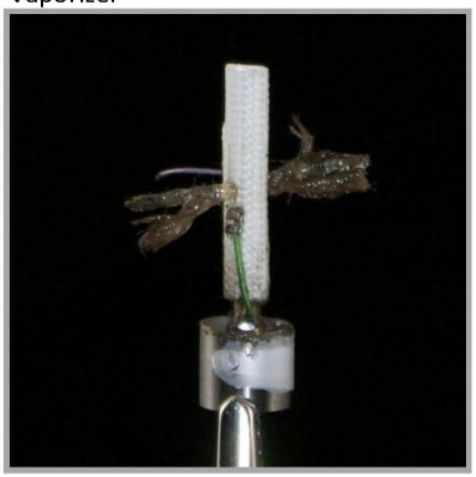 *Double wrapped cross* EX2039.0082

Halo G6	Vaporizer 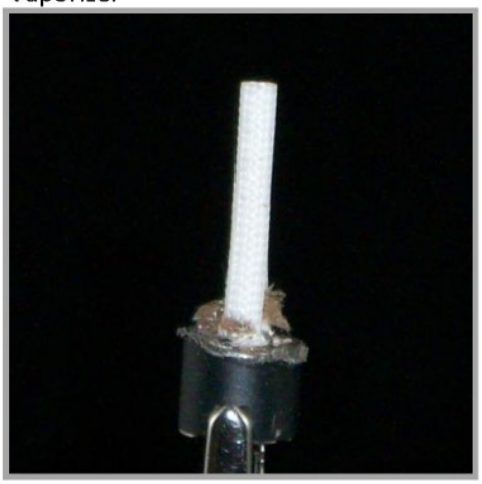 *Triple wrapped inverted T* EX2039.0085
Logic Power Series	Vaporizer *Triple wrapped inverted T* EX2039.0091

Nirvana Eco	Vaporizer *Triple wrapped inverted T* EX2039.0106
Ozone Smoke	Vaporizer 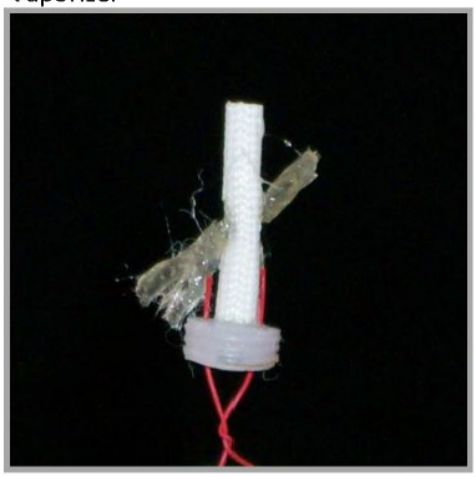 *Triple wrapped cross* EX2039.0109

Pure	Vaporizer 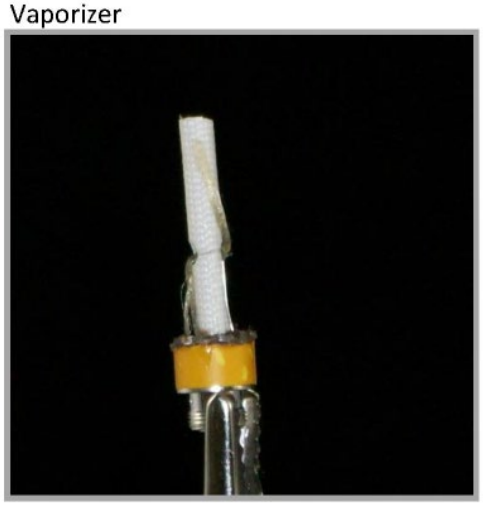 *Triple wrapped cross* EX2039.0118
Smokesation	Vaporizer *Double wrapped inverted T* EX2039.0133

SmokeTip	Vaporizer *Triple wrapped inverted T* EX2039.0136
South Beach Smoke	Vaporizer 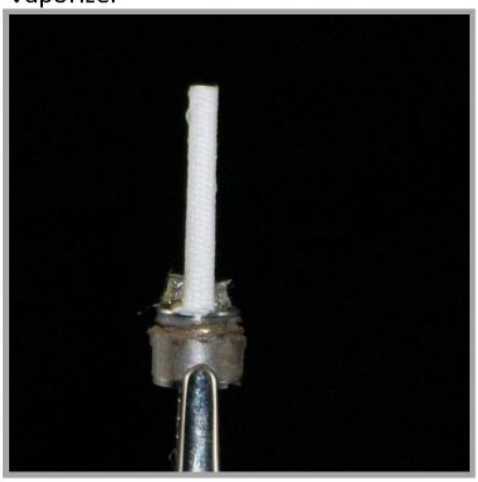 *Double wrapped inverted T* EX2039.0139

Ultra	Vaporizer *Double wrapped inverted T* EX2039.0142
V2 Cigs	Vaporizer *Triple wrapped inverted T* EX2039.0145

Vapage	Vaporizer *Triple wrapped inverted T* EX2039.0148
Vapor Couture	Vaporizer *Triple wrapped inverted T* EX2039.0151

Victory	Vaporizer *Double wrapped inverted T* EX2039.0157	
White Cloud Cirrus 3	Vaporizer *Triple wrapped inverted T* EX2039.0160	

Zerocig	Vaporizer *Double wrapped cross* EX2039.0163

414. In my opinion, evidence relating to the Green Smoke e-cigarette further supports copying by others. Before the claimed invention of the 881 Patent, the first generation Green Smoke device include a longitudinal heating element (*i.e.*, an axial coil) (shown in a red box, below), rather than a transverse heating element across a central airflow passageway.

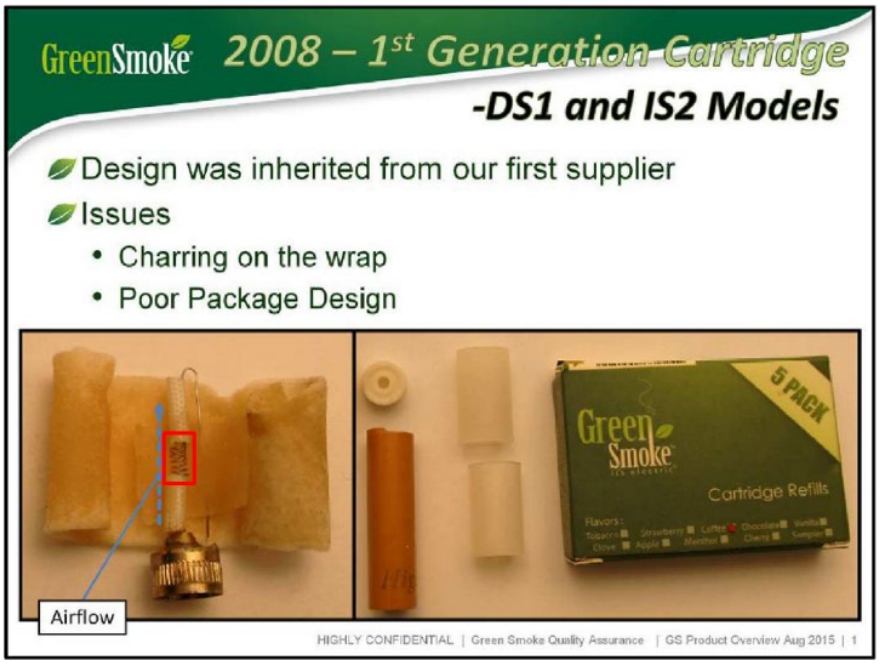

EX2038.0001 (annotated)

415. Only after Fuma's commercialization of the Fuma E-Cigarette in 2009 did Green Smoke introduce later generation cartridges that included a transverse heating coil and wick across a central airflow passageway surrounded by a solution holding medium. These later generation models are shown below.

***Id.* at .0002**

***Id.* at .0003**

GreenSmoke 2011 – 4th Generation Cartridge
-Improved FlavorMax
New Features
• New NBR Plugs
• Diagonal cut in FiberTube
25%
Green smoke
it's electric
ABSOLUTE Tobacco
HIGHLY CONFIDENTIAL | Green Smoke Quality Assurance | GS Product Overview Aug 2015 | 4

***Id.* at .0004**

IX. Conclusion

416. For the reasons stated above, it is my opinion that Dr. Sturges has failed to establish that the challenged claims are obvious.

417. I declare that all statements made herein of my knowledge are true and that all statements made on information and belief are believed to be true; and further, that these statements were made with knowledge that willful false statements and the like so made are punishable by fine or imprisonment, or both, under 18 U.S.C. § 1001.

418. I declare under penalty of perjury under the laws of the United States of America that the foregoing is true and correct.

Executed on August 23, 2024 in Atlanta, GA.

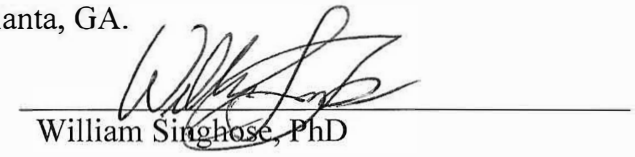

William Singhose, PhD

NJOY Exhibit 2022.266
Juul v. NJOY
IPR2024-00161

APPENDIX 1

Professor William Singhose, PhD

I. Earned Degrees 2

II. Employment History 2

III. Honors and Awards 4

IV. Research, Scholarship, and Creative Activities 5

A. Published Books, Book Chapters, and Edited Volumes 5

B. Refereed Publications and Submitted Articles 5

D. Presentations 37

E. Grants and Contracts 41

F. Other Scholarly and Creative Accomplishments 49

G. Other Professional 49

V. Education 50

B. Individual Student Guidance 50

C. Educational Innovations and Other Contributions 55

a) New Course Development 55

VI. Service 56

A. Professional Contributions 56

B. Public and Community Service 57

C. Institute Contributions 57

NJOY Exhibit 2022.268
Juul v. NJOY
IPR2024-00161

WILLIAM SINGHOSE
Professor
The George W. Woodruff School of Mechanical Engineering
Georgia Institute of Technology
813 Ferst Drive, N.W., Atlanta, GA 30332
Office: 404-385-0668 fax: 404-894-9342
Singhose@gatech.edu

I. Earned Degrees

1997, Ph.D. Mechanical Engineering, Massachusetts Institute of Technology
1992, M.S. Mechanical Engineering, Stanford University
1990, B.S. Mechanical Engineering, Massachusetts Institute of Technology

II. Employment History

Georgia Institute of Technology (8/98 – present) Atlanta, GA
Professor of Mechanical Engineering (2014-Present). Associate Professor (2004-2014). Assistant Professor (1998-2004). Head of Automation and Mechatronics Group (2006-2010). Develop curriculum and teach courses in mechanical design, dynamics, controls, and rehabilitation engineering. Develop research programs and proposals. Direct research of graduate students, undergraduate students, and postdoctoral researchers in the areas of dynamics, vibration suppression, robotics, spacecraft, crane control, flight control, and active seating technology. Advise SME, ASME, and CanSat student groups. Held visiting appointments at MIT, Stanford, the Tokyo Institute of Technology, and Polytechnic University of Madrid.

InVekTek, Inc. (12/15 – present) Atlanta, GA
Co-Founder and CTO. Develop and commercialize control systems for robotic and industrial material-handling systems. The control systems are embedded in motor drives to reduce unwanted machine motion.

Google, Inc. (9/17 – 12/19) Mountain View, CA
Pennington Advisor mechanical engineer to Google's augmented reality (Daydream) and Advanced Technology and Projects (ATAP) facilities. Performed mechanical design and analysis of hand-held consumer electronic products and wearable devices. Performed failure and hazard analyses. Directed and performed research activities on human-motion measurement, human-machine interactions, actuation system design, and activity monitoring.

Stanford University (3/18 – 7/19) Stanford, CA
Visiting Professor in the Department of Mechanical Engineering. Delivered lectures on product design, safety analysis, and sensors. Advised student design teams.

CAMotion Cranes, Inc. (9/08 – 11/2013) Atlanta, GA
Co-Founder and Board Member. Developed and commercialized crane-control technology. Controllers improve crane safety, throughput, and ease of operation. Sold company to PaR Systems in Nov. 2013.

Massachusetts Institute of Technology (9/10 – 6/11) Cambridge, MA

NJOY Exhibit 2022.269
Juul v. NJOY
IPR2024-00161

Taught graduate-level controls course. Supervised research projects. Developed textbook on command-shaping control methods.

Polytechnic University of Madrid (5/10 – 8/10) Madrid, Spain
Taught course in manufacturing controls. Supervised construction of experimental equipment. Developed international collaborative research projects.

Tokyo Institute of Technology (10/05 – 4/06) Tokyo, Japan
Visiting Associate Professor in Center of Excellence in Robotics. Taught advanced control course. Conducted experiments with robotic crane. Developed research proposals with Japanese collaborators.

Massachusetts Institute of Technology (6/97 – 7/98) Cambridge, MA
Postdoctoral Fellow in the NSF Center for Innovation in Product Development. Directed the development of an internet-controlled machine. Conducted research in design process optimization. Taught senior-level design course.

Convolve, Inc. (4/92 - 8/94) Armonk, NY
Managed NSF sponsored project investigating techniques for inspecting manufactured parts using measurement robots. Developed computer simulations of manufacturing robots, coordinate measuring machines, car seats, and NASA weather balloons. Designed control systems for automated machines. Designed data acquisition system using a laser interferometer.

Apple Computers, Inc. (6/91 - 3/92) Santa Clara, CA
Designed and performance evaluation tests for the Audio-Visual 14" Monitor. Designed and constructed test equipment. Organized, interpreted and reported test results produced by product evaluation team. Made design recommendations based on test results and dynamic simulations.

Walt Disney World (5/90-8/90) Orlando, FL
Designed components for the Space Mountain rehabilitation project. Performed failure analysis and developed design changes for Star Tours and Body Wars simulators Performed stress analysis of the Star Jets base plate and specified welds. Designed IR sensor mount and cable management for the Norway Pavilion water ride. Formulated repair procedures for Pirates of the Caribbean roller bearings.

Artificial Intelligence Laboratory (12/87 - 6/90) Cambridge, MA
Developed computer simulations of flexible robots. Performed research on command-shaping methods to eliminate vibration in computer controlled machines. Performed robotic experiments to verify controller's robustness to modeling errors and changing configurations. Verified new control theory by performing simulations of the space shuttle's robotic arm. The control methods were tested on-orbit in Space Shuttle Endeavour.

Cable News Network (Summer '89) Atlanta, GA
AAAS Mass Media Science and Engineering Fellow. Wrote several stories for CNN Science and Technology. Field producer on stories covering the Starship 1 aircraft and an international climate study. Produced a story reporting on a car seat that lowers impact forces during head-on collisions.

NJOY Exhibit 2022.270
Juul v. NJOY
IPR2024-00161

Riverside Cement Company (Summer '88) Riverside, CA
Cement lab technician. Designed and performed experiments to test mechanical properties of cement. Operated a wide range of equipment including forklifts, cement pumps, sand sifters, trucks, climatic test chambers, and compression testing machines.

Bill's Asphalt Repair (8/85-8/87) Springfield, OR
Developed bids and executed construction projects involving asphalt and concrete structures. Operated heavy machinery including: dump trucks, paving machines, steam rollers, and compactors.

III. Honors and Awards

Academic

2015 Asian Control Conference, Best Application Paper Finalist
2013 Zeigler Woodruff School Outstanding Educator Award
2009 Georgia Tech SAIC Student Paper Contest Winner, Graduate Division
2006 Georgia Tech SAIC Student Paper Contest Winner, Undergraduate Division
2004 CETL Educational Partnership Award
2003 SME Jiri Tlusty Outstanding Young Manufacturing Engineer Award
2002 Georgia Tech SAIC Student Paper Contest Winner, Undergraduate Division
2002 CETL/BP Junior Faculty Teaching Excellence Award
2002 Japan Society for the Promotion of Science Invitation Fellowship
2001 Georgia Tech SAIC Student Paper Contest Winner, Undergraduate Division
1996 Massachusetts Space Grant Fellowship
1990 Office of Naval Research Fellowship
1990 Phi Beta Kappa
1989 AAAS Mass Media Science and Engineering Fellowship
1989 Tau Beta Pi
1989 Pi Tau Sigma

Academic and Athletic

1990 The GTE Academic All-American, Collegiate Division (only one award nationally each year)
1990 NCAA Postgraduate Scholarship
1990 NACDA/Walt Disney Scholar-Athlete Award

Athletic

1989 NCAA Division III National Decathlon Champion
1990 New England Division III Athlete of the Year
1990 All New England Field Athlete of the Year
1988-1990 NCAA Division III All-American (8-Times)

NJOY Exhibit 2022.271
Juul v. NJOY
IPR2024-00161

IV. Research, Scholarship, and Creative Activities

A. Published Books, Book Chapters, and Edited Volumes

[1] J. Vaughan and W. Singhose, "Advances in Delays and Dynamics at Springer," in *The Influence of Time Delay on Crane Operator Performance*. 2014

[2] W. Singhose, "Trajectory Planning for Flexible Robots," in *CRC Robotics and Automation Handbook*, T. Kurfess, Ed.: CRC Press, 2004.

[3] W. Singhose and W. Seering, "Control of Flexible Manipulators with Input Shaping Techniques," in *Flexible Robot Manipulators: Modelling, Simulation and Control*, M. O. Tokhi and A. K. M. Azad, Eds. Stevenage, UK: The Institution of Engineering and Technology, 2008, pp. 235-257.

[4] W. Singhose and J. Donnell, *Introductory Mechanical Design Tools*: www.lulu.com/content/3365814, 978-0-9842210-4-2, 2009.

[5] W. Singhose, J. Donnell, and D. Frakes, *Introductory Biomechanical Design Tools*: www.lulu.com/content/8235890, 978-0-9842210-5-9, 2010.

[6] W. Singhose and W. Seering, *Command Generation for Dynamic Systems*: www.lulu.com/content/621219, 978-0-9842210-0-4, 2010.

[7] M. A. Lau and W. E. Singhose, "Optimal Control of Dynamical Systems," in *Applications of Spreadsheets in Education The Amazing Power of a Simple Tool*, M. L. a. S. Sugden, Ed.: Bentham Science Publishers Ltd., 2011, pp. 41–63.

[8] W. Singhose, J. Donnell, and Y. Hu, *Introductory Mechanical Design Tools (in Chinese)*. Wuhan, China: Huazhong University of Science and Technology Press, 978-7-5609-7926-7, 2012.

B. Refereed Publications and Submitted Articles

Journal Articles

[1] W. Tian, J. Huang, and W. Singhose, "Control of Cooperative-Transportation Dynamics in Twin-Lift Cranes Suspending a Liquid Container," *IEEE Trans. on Industrial Electronics,* vol. 71, no. 4, pp. 4016-4025, 2024, doi: 10.1109/TIE.2023.3274868.

[2] G. Li, J. Huang, W. Singhose, and C. Adams, "Cooperative-Transportation Dynamics of Two Helicopters Transporting a Rocket Booster Undergoing Planar Motions," *Aerospace Science and Technology,* vol. 145, p. 108873, 2024, doi: doi.org/10.1016/j.ast.2024.108873.

[3] K. Sorensen *et al.*, "Electromagnetic Model of Linear Resonant Actuators," *ASME J. Dynamic Systems, Measurement, and Control,* vol. 145, no. 5, pp. 051003-1-051003-9, 2023, doi: Electromagnetic Model of Linear Resonant Actuators.

[4] T. Gao, J. Huang, and W. Singhose, "Eccentric-Load Dynamics and Oscillation Control of Industrial Cranes Transporting Heterogeneous Loads," *Mechanism and Machine Theory,* no. 172, p. 104800, 2022, doi: doi.org/10.1016/j.mechmachtheory.2022.104800.

NJOY Exhibit 2022.272
Juul v. NJOY
IPR2024-00161

[5] A. E. Vela, W. Singhose, K. Feigh, J.-P. Clarke, and E. Feron, "Evaluation of conflict-resolution policies on controller taskload," *Chinese Journal of Aeronautics,* vol. 34, no. 5, pp. 315-330, 2021.

[6] A. Kivila, W. Book, and W. Singhose, "Modeling spatial multi-link flexible manipulator arms based on system modes," *International Journal of Intelligent Robotics and Applications,* vol. 5, no. 3, pp. 300-312, 2021/09/01 2021, doi: 10.1007/s41315-021-00201-3.

[7] J. Vaughan, W. Singhose, and D. Kim, "Analysis of Unrestrained Crawler-Crane Counterweights During Tip-Over Accidents," *Mechanics Based Design of Structures and Machines,* no. May, 2020, doi: 10.1080/15397734.2020.1768113.

[8] J. Peng, J. Huang, and W. Singhose, "Payload twisting dynamics and oscillation suppression of tower cranes during slewing motions," *Nonlinear Dynamics,* vol. 98, no. 2, pp. 1041–1048, 2019, doi: doi.org/10.1007/s11071-019-05247-4.

[9] S. Wang, A. Ferri, and W. Singhose, "Slipping Dynamics of Slender-Beam Payloads During Lay-Down Operations," *Journal of Dynamic Systems, Measurement, and Control,* vol. 140, no. 8, 2018, doi: 10.1115/1.4039154.

[10] D. Fujioka and W. Singhose, "Optimized Input-Shaped Model Reference Control on Double-Pendulum System," *Journal of Dynamic Systems, Measurement, and Control,* vol. 140, no. 10, 2018, doi: 10.1115/1.4039786.

[11] C. Adams and W. Singhose, "Robust Constant-Amplitude Input Shapers with Selectable Duration," *AIAA Journal of Guidance, Control, and Dynamics,* vol. 41, no. 12, pp. 2543-2553, 2018.

[12] F. Schlagenhauf, P. P. Sahoo, and W. Singhose, "A Comparison of Dual-Kinect and Vicon Tracking of Human Motion for Use in Robotic Motion Programming," *J. of Robotics and Automation Engineering,* vol. 1, no. 2, p. 555558, 2017.

[13] R. Mar, A. Goyal, V. Nguyen, T. Yang, and W. Singhose, "Combined Input Shaping and Feedback Control for Double-Pendulum Systems," *Mechanical Systems and Signal Processing,* vol. 85, pp. 267-277, 2017.

[14] A. Kivila, W. Book, and W. Singhose, "Exact Modeling of n-link Spatial Serial Structures using Transfer Matrices," *ASME J. of Dynamic Systems, Measurement, and Control,* vol. 139, no. 11, pp. 114502-114506, 2017, doi: doi.org/10.1115/1.4036555.

[15] A. Garcia, W. Singhose, and A. Ferri, "Three-Dimensional Dynamic Modeling and Control of Off-Centered Bridge Crane Lifts," *ASME J. Dynamic Systems, Meas., and Control,* vol. 139, no. 4, p. 041005, 2017, doi: doi:10.1115/1.4035030.

[16] W. Singhose, K. Peng, A. Garcia, and A. Ferri, "Modeling and Control of Crane Payload Lift-off and Lay-down Operations," *FME Transactions,* vol. 44, pp. 237-248, 2016.

[17] W. Singhose, C. Adams, and D. Kim, "A Dynamics-Based Hazard Analysis of Inverted-Pendulum Human Transporters Using Data-Mined Information," *ASCE-ASME Journal of Risk and Uncertainty in Engineering Systems, Part B:*

NJOY Exhibit 2022.273
Juul v. NJOY
IPR2024-00161

Mechanical Engineering, vol. 2, no. Sept., pp. 031007-1-12, 2016, doi: 10.1115/1.4032459.

[18] J. J. Potter and W. Singhose, "Design and Human-in-the-Loop Testing of Reduced-Modification Input Shapers," *IEEE Trans. on Control System Technology,* vol. 24, no. 4, pp. 1513-1520, 2016.

[19] S.-W. Hong, S.-W. Kwon, and W. Singhose, "Vibration suppression of axially-extending cantilever beams under gravity using command shaping," *Research J. of Applied Sciences, Engineering and Technology,* vol. 12, no. 12, pp. 1196-1203, 2016.

[20] A. Dhanda, J. Vaughan, and W. Singhose, "Vibration Reduction Using Near Time-Optimal Commands for Systems With Nonzero Initial Conditions," *Journal of Dynamic Systems, Measurement, and Control,* vol. 138, no. 4, pp. 041006-041006, 2016, doi: 10.1115/1.4032064.

[21] J. J. Potter and W. Singhose, "A Planar Experimental Remote-Controlled Helicopter with a Suspended Load," *IEEE/ASME Transactions on Mechatronics,* vol. 20, no. 5, pp. 2496-2503, 2015, doi: 10.1109/TMECH.2014.2386801.

[22] C. Adams, J. Potter, and W. Singhose, "Input-Shaping and Model-Following Control of a Helicopter Carrying a Suspended Load," *AIAA J. of Guidance, Control, and Dynamics,* vol. 38, no. 1, pp. 94-105, 2015, doi: 10.2514/1.G000326.

[23] J. Yoon, S. Nation, W. Singhose, and J. Vaughan, "Control of Crane Payloads that Bounce During Hoisting," *IEEE Trans. on Control Systems Technology,* vol. 22, no. 3, pp. 1233-1238, 2014.

[24] J. J. Potter and W. Singhose, "Effects of Input Shaping on Manual Control of Flexible and Time-Delayed Systems," *Human Factors,* vol. 56, no. 7, pp. 1284-1295, 2014.

[25] E. Maleki, W. Singhose, and S. S. Gürleyük, "Increasing Crane Payload Swing by Shaping Human-Operator Commands," *IEEE Transactions on Human-Machine Systems,* vol. 44, no. 1, pp. 106-114, 2014.

[26] B. Xiao, Q. Hu, W. Singhose, and X. Huo, "Reaction Wheel Fault Compensation and Disturbance Rejection for Spacecraft Attitude Tracking," *AIAA J. of Guidance, Control, and Dynamics,* vol. 36, no. 6, pp. 1565-1575, 2013, doi: 10.2514/1.59839.

[27] H. Seong-Wook, S. Yong-Kyu, and W. Singhose, "A New Command Shaper Design for Residual Vibration Reduction in Flexible Systems Using Artificial Mode Constraints," *International Journal of Engineering and Technology,* vol. 5, no. 2, pp. 210-13, 04/ 2013, doi: 10.7763/IJET.2013.V5.544.

[28] A. Rauch, W. Singhose, D. Fujioka, and T. Jones, "Tip-Over Stability Analysis of Mobile Boom Cranes with Swinging Payloads," *ASME J. of Dynamic Systems, Meas., and Control,* vol. 135, no. 3, pp. 031008-1-6, May 2013.

[29] B. Pridgen, K. Bai, and W. Singhose, "Shaping Container Motion for Multi-Mode and Robust Slosh Suppression," *AIAA J. of Spacecraft and Rockets,* vol. 50, no. 2, pp. 440-448, 2013, doi: 10.2514/1.A32137.

NJOY Exhibit 2022.274
Juul v. NJOY
IPR2024-00161

[30] J. J. Potter and W. E. Singhose, "Improving Manual Tracking of Systems with Oscillatory Dynamics," *IEEE Trans. on Human-Machine Systems,* vol. 43, no. 1, pp. 46-52, 2013.
[31] J. Huang, E. Maleki, and W. Singhose, "Dynamics and swing control of mobile boom cranes subject to wind disturbances," *IET Control Theory and Applications,* vol. 7, no. 9, pp. 1187-1195, 2013.
[32] S.-W. Hong, Y.-K. Seo, and W. Singhose, "A New Command Shaper Design for Residual Vibration Reduction in Flexible Systems Using Artificial Mode Constraints," *IACSIT Int. Journal of Engineering and Technology,* vol. 5, no. 2, pp. 210-213, 2013.
[33] S. S. Gürleyük, K. C. C. Peng, and W. Singhose, "Hand Motion Input Shaping Control of a Crane System: El Hareketini Takip Eden Vinç Sisteminin Giriş Şekillendirici Denetimi (in Turkish)," *Karaelmas Science and Engineering Journal,* vol. 3, no. 2, pp. 43-47, 2013.
[34] D. Frakes, C. Zwart, and W. Singhose, "Extracting Motion Data from Video Using Optical Flow with Physically-Based Constraints," *Int. J. of Control, Automation, and Systems,* vol. 11, no. 1, p. 48:57, 2013.
[35] A. Vela, K. Feigh, S. Solak, W. Singhose, and J.-P. Clarke, "Formulation of Reduced-Taskload Optimization Models for Conflict Resolution," *IEEE Trans. on Systems, Man, and Cybernetics,* vol. 42, no. 6, pp. 1552-61, 2012.
[36] B. Pridgen and W. Singhose, "Comparison of Polynomial Cam Profiles and Input Shaping for Driving Flexible Systems," *ASME J. of Mechanical Design,* vol. 134, no. 12, p. 124505 (7 pp.), 2012.
[37] K. C. C. Peng, W. Singhose, and D. Frakes, "Hand-Motion Crane Control Using Radio Frequency Real-Time Location Systems," *IEEE/ASME Trans. on Mechatronics,* vol. 17, no. 3, pp. 464-471, 2012.
[38] K. C. C. Peng, W. Singhose, and P. Bhaumik, "Using Machine Vision and Hand-Motion Control to Improve Crane Operator Performance," *IEEE Trans. on Systems, Man, and Cybernetics - Part A: Systems and Humans,* vol. 42, no. 6, pp. 1496-1503, 2012.
[39] E. Maleki and W. Singhose, "Swing Dynamics and Input-Shaping Control of Double-Pendulum Boom Cranes," *ASME J. Computational and Nonlinear Dynamics,* vol. 7, no. July, pp. 031006-1-10, 2012.
[40] E. Maleki, B. Pridgen, W. Singhose, U. Glauser, and W. Seering, "Educational Use of a Small-Scale Cherrypicker," *International Journal of Mechanical Engineering Education,* vol. 40, no. 2, pp. 104-120, 2012.
[41] J. R. Huey and W. Singhose, "Design of Proportional Derivative Feedback and Input Shaping for Control of Inertia Plants," *IET Control Theory and Applications,* vol. 6, no. 3, pp. 357-364, 2012.
[42] J. Vaughan, A. Smith, S. J. Kang, and W. Singhose, "Predictive Graphical User Interface Elements to Improve Crane Operator Performance," *IEEE Trans. on*

NJOY Exhibit 2022.275
Juul v. NJOY
IPR2024-00161

Systems, Man, and Cybernetics--Part A: Systems and Humans, vol. 41, no. 2, pp. 323-330, 2011.

[43] J. Vaughan, P. Jurek, and W. Singhose, "Reducing Overshoot in Human-Operated Flexible Systems," *ASME J. Dynamic Systems, Measurement, and Control,* vol. 133, pp. 011010-1-10, 2011, doi: 10.1115/1.4002074.

[44] K. L. Sorensen, P. W. Cross, W. E. Singhose, and S. Prakash, "Vibration Analysis and Mitigation of Dead-Zone on Systems Using Two-Impulse Zero-Vibration Input Shaping," *ASME J. of Computational and Nonlinear Dynamics,* vol. 6, no. 1, p. 011011, 2011, doi: 10.1115/1.4001818.

[45] W. Singhose *et al.*, "Use of Cranes in Education and International Collaborations," *J. of Robotics and Mechatronics,* vol. 23, no. 5, pp. 881-891, 2011.

[46] W. Singhose and J. Vaughan, "Reducing Vibration by Digital Filtering and Input Shaping," *IEEE Trans. on Control Systems Technology,* vol. 19, no. 6, pp. 1410-1420, 2011, doi: 10.1109/TCST.2010.2093135.

[47] E. Maleki and W. Singhose, "Dynamics and Control of a Small-Scale Boom Crane," *ASME J. of Computational and Nonlinear Dynamics,* vol. 6, no. 3, pp. 031015-1-8, 2011.

[48] J. Fortgang, W. Singhose, J. d. J. Márquez, and J. Perez, "Command Shaping Control for Micro-milling Operations," *Int. Journal of Control, Automation, and Systems,* vol. 9, no. 6, 2011.

[49] A. E. Vela, S. Solak, J.-P. Clarke, W. Singhose, E. Barnes, and E. Johnson, "Near Real-Time Fuel-Optimal En Route Conflict Resolution," *IEEE Trans. on Intelligent Transportation Systems,* vol. 11, no. 4, pp. 826-837, 2010.

[50] J. Vaughan, D. Kim, and W. Singhose, "Control of Tower Cranes with Double-Pendulum Dynamics," *IEEE Trans. on Control Systems Technology,* vol. 18, no. 6, pp. 1345 –1358, 2010.

[51] K. Sorensen, K. Hekman, and W. Singhose, "Finite-State Input Shaping," *IEEE Trans. on Control Systems Technology,* vol. 18, no. 3, pp. 664-72, 2010.

[52] W. Singhose, R. Eloundou, and J. Lawrence, "Command Generation for Flexible Systems by Input Shaping and Command Smoothing," *AIAA J. of Guidance, Control, and Dynamics,* vol. 33, no. 6, pp. 1697-1707, 2010.

[53] R. Manning, J. Clement, D. Kim, and W. Singhose, "Dynamics and Control of Bridge Cranes Transporting Distributed-Mass Payloads," *ASME J. Dynamic Systems, Measurement, and Control,* vol. 132, no. Jan., pp. 014505-3, 2010.

[54] J. Lawrence and W. Singhose, "Command Shaping Slewing Motions for Tower Cranes," *ASME J. of Vibration and Acoustics,* vol. 132, no. Feb., pp. 011002-1-11, 2010.

[55] D. Kim and W. Singhose, "Performance Studies of Human Operators Driving Double-Pendulum Bridge Cranes," *IFAC Control Engineering Practice,* vol. 18, no. June, pp. 567-576, 2010.

NJOY Exhibit 2022.276
Juul v. NJOY
IPR2024-00161

[56] J. R. Huey and W. Singhose, "Trends in the Stability Properties of CLSS Controllers: A Root-Locus Analysis," *IEEE Trans. on Control Systems Technology,* vol. 18, no. 5, pp. 1044-56, 2010.
[57] J. Hong-Xia, L. Wan-Li, and W. Singhose, "Dynamic Modeling and Vibration Analysis of Cherry Pickers with Flexible Arms (in Chinese)," *Zhendong yu Chongji/Journal of Vibration and Shock,* vol. 29, no. 12, pp. 136-140, 2010.
[58] D. Blackburn *et al.*, "Command Shaping for Nonlinear Crane Dynamics," *J. of Vibration and Control,* vol. 16, no. 4, pp. 477-501, 2010.
[59] D. Blackburn, J. Lawrence, J. Danielson, W. Singhose, T. Kamoi, and A. Taura, "Radial-Motion Assisted Command Shapers for Nonlinear Tower Crane Rotational Slewing," *Control Engineering Practice,* vol. 18, no. May, pp. 523-531, 2010.
[60] J. Vaughan, A. Yano, and W. Singhose, "Robust Negative Input Shapers for Vibration Suppression," *ASME J. Dynamic Systems, Measurement, and Control,* vol. 131, no. 3, pp. 031014-1-9, 2009.
[61] Y.-G. Sung and W. E. Singhose, "Limited-State Commands for Systems with Two Flexible Modes," *Mechatronics,* vol. 19, no. August, pp. 780-87, 2009.
[62] Y.-G. Sung and W. Singhose, "Robustness Analysis of Input Shaping Commands for Two-mode Flexible Systems," *IET Control Theory and Applications,* vol. 3, no. 6, pp. 722-30, 2009.
[63] W. Singhose, "Command Shaping for Flexible Systems: A Review of the First 50 Years," *Int. J. of Precision Engineering and Manufacturing,* vol. 10, no. 4, pp. 153-168, 2009.
[64] M. Robertson and W. Singhose, "Robust Discrete-Time Deflection-Limiting Commands for Flexible Systems," *IET Control Theory and Applications,* vol. 3, no. 4, pp. 473-480, 2009.
[65] J. Vaughan, A. Yano, and W. Singhose, "Comparison of Robust Input Shapers," *J. of Sound and Vibration,* vol. 315, no. 4-5, pp. 797–815, 2008.
[66] J. Vaughan, J. Fortgang, W. Singhose, J. Donnell, and T. Kurfess, "Using Mechatronics to Teach Mechanical Design and Technical Communication," *Mechatronics,* vol. 18, no. 4, pp. 179-186, 2008.
[67] Y.-G. Sung and W. Singhose, "Deflection-Limiting Commands for Systems with Velocity Limits," *AIAA J. of Guidance, Control, and Dynamics,* vol. 31, no. 3, pp. 472-8, 2008.
[68] K. Sorensen and W. Singhose, "Command-Induced Vibration Analysis Using Input Shaping Principles," *Automatica,* vol. 44, no. 9, pp. 2392–2397, 2008.
[69] K. Sorensen, A. Daftari, W. Singhose, and K. Hekman, "Negative Input Shaping: Eliminating Overcurrenting and Maximizing the Command Space," *ASME J. of Dynamic Systems, Measurement, and Control,* vol. 130, no. 6, pp. 0610121-0610127, 2008.

NJOY Exhibit 2022.277
Juul v. NJOY
IPR2024-00161

[70] W. Singhose, D. Kim, and M. Kenison, "Input Shaping Control of Double-Pendulum Bridge Crane Oscillations," *ASME J. Dynamic Systems, Measurement, and Control,* vol. 130, no. May, p. 034504, 2008.
[71] J. R. Huey, K. L. Sorensen, and W. E. Singhose, "Useful Applications of Closed-Loop Signal Shaping Controllers," *IFAC Control Engineering Practice,* vol. 16, no. 7, pp. 836-846, 2008.
[72] S.-W. Hong, S.-W. Park, and W. Singhose, "Input Shaping for Vibration Control in Precise Positioning System (in Korean)," *Korean Society for Precision Engineering,* vol. 25, no. 4, pp. 26-31, 2008.
[73] J. Danielson, J. Lawrence, and W. Singhose, "Command Shaping for Flexible Systems Subject to Constant Acceleration Limits," *ASME J. Dynamic Systems, Measurement, and Control,* vol. 130, no. 5, pp. 0510111-0510118, 2008.
[74] T. Bradley, J. Danielson, J. Lawrence, and W. Singhose, "Command Shaping for Non-Symmetrical Acceleration and Braking Dynamics," *ASME J. of Vibration and Acoustics,* vol. 130, no. Oct., pp. 054503-1-5, 2008.
[75] Y.-G. Sung and W. Singhose, "Closed-Form Specified-Fuel Commands for Two Flexible Modes," *AIAA J. of Guidance, Control, and Dynamics,* vol. 30, no. 6, pp. 1590-6, 2007.
[76] K. Sorensen, W. Singhose, and S. Dickerson, "A Controller Enabling Precise Positioning and Sway Reduction in Bridge and Gantry Cranes," *IFAC Control Engineering Practice,* vol. 15, no. 7, pp. 825-837, 2007.
[77] M. J. Robertson and W. E. Singhose, "Specified-Deflection Command Shapers for Second-Order Position Input Systems," *ASME J. Dynamic Systems, Measurement, and Control,* vol. 129, no. 6, pp. 856-859, 2007.
[78] S.-W. Park, S.-W. Hong, H.-S. Choi, and W. Singhose, "Discretization Effects of Real-Time Input Shaping in Residual Vibration Reduction for Precise XY Stage (in Korean)," *Trans. of the Korean Society of Machine Tool Engineers,* vol. 16, no. 4, pp. 71-78, 2007.
[79] H. Kojima and W. Singhose, "Adaptive Deflection Limiting Control for Slewing Flexible Space Structures," *AIAA J. of Guidance, Control, and Dynamics,* vol. 30, no. 1, pp. 61-67, 2007.
[80] K. A. Hekman and W. E. Singhose, "A Feedback Control System for Suppressing Crane Oscillation with On-Off Motors," *Int. Journal of Control, Automation, and Systems,* vol. 5, no. 3, pp. 223-233, 2007.
[81] W. Singhose, J. Lawrence, K. Sorensen, and D. Kim, "Applications and Educational Uses of Crane Oscillation Control," *FME Transactions,* vol. 34, no. 4, pp. 175-183, 2006.
[82] W. Singhose, E. Biediger, H. Okada, and S. Matunaga, "Closed-Form Specified-Fuel Commands for On-Off Thrusters," *AIAA J. of Guidance, Control, and Dynamics,* vol. 29, no. 3, pp. 606-11, 2006.

NJOY Exhibit 2022.278
Juul v. NJOY
IPR2024-00161

[83] W. Singhose, E. Biediger, H. Okada, and S. Matunaga, "Experimental Verification of Real-Time Control for Flexible Systems with On-Off Actuators," *ASME J. of Dynamic Systems, Measurement, and Controls,* vol. 128, no. 2, pp. 287-96, 2006.

[84] M. Robertson, K. Kozak, and W. Singhose, "Computational Framework for Digital Input Shapers Using Linear Optimization," *IEE Control Theory and Applications,* vol. 153, no. 3, pp. 314-322, 2006.

[85] J. d. J. Márquez, J. Fortgang, W. Singhose, and J. M. Perez, "Optimización del Proceso de Microfresado Mediante La Reducción de Vibraciones Empleando Técnicas de Generación de Ordenes de Movimiento," *Revista Internacional de Información Tecnológica,* vol. 17, no. 6, pp. 3-6, 2006.

[86] K. Kozak, W. Singhose, and I. Ebert-Uphoff, "Performance Measures For Input Shaping and Command Generation," *ASME J. Dynamic Systems, Measurement, and Control,* vol. 128, no. 3, pp. 731-6, 2006.

[87] A. Khalid, J. Huey, W. Singhose, J. Lawrence, and D. Frakes, "Human Operator Performance Testing Using an Input-Shaped Bridge Crane," *ASME J. of Dynamic Systems, Measurement, and Control,* vol. 128, no. 4, pp. 835-841, 2006.

[88] S.-W. Hong, V. Patrangenaru, W. Singhose, and S. Sprigle, "Identification of Human-Generated Forces on Wheelchairs During Total-Body Extensor Thrusts," *Clinical Biomechanics,* vol. 21, no. 8, pp. 790-798, 2006.

[89] S.-W. Hong, V. Patrangenaru, W. Singhose, and S. Sprigle, "A Method for Identifying Human-Generated Forces During an Extensor Thrust," *Int. J. of Precision Engineering and Manufacturing,* vol. 7, no. 3, pp. 66-71, 2006.

[90] T. Watanabe, H. A. Fujii, H. Kojima, and W. Singhose, "Design of Electric Current Profile for Electrodynamic Tether System by Input Shaping Method (In Japanese)," *J. of the Japan Society for Aeronautical and Space Sciences,* vol. 53, no. 623, pp. 569-576, 2005.

[91] J. Lawrence, W. Singhose, and K. Hekman, "Friction-Compensating Input Shaping for Vibration Reduction," *ASME J. of Vibration and Acoustics,* vol. 127, no. August, pp. 307-14, 2005.

[92] J. Fortgang and W. Singhose, "Design Of Vibration Absorbers For Step Motions and Step Disturbances," *ASME J. of Mechanical Design,* vol. 127, no. March, pp. 160-163, 2005.

[93] J. Fortgang and W. Singhose, "Concurrent Design of Vibration Absorbers and Input Shapers," *ASME J. Dynamic Systems, Measurement, and Control,* vol. 127, no. September, pp. 329-335, 2005.

[94] W. Singhose, E. Biediger, Y.-H. Chen, and B. Mills, "Reference Command Shaping Using Specified-Negative-Amplitude Input Shapers for Vibration Reduction," *ASME J. of Dynamic Systems, Measurement, and Controls,* vol. 126, no. March, pp. 210-214, 2004.

NJOY Exhibit 2022.279
Juul v. NJOY
IPR2024-00161

[95] K. Kozak, I. Ebert-Uphoff, and W. Singhose, "Locally Linearized Dynamic Analysis of Parallel Manipulators and Application of Input Shaping to Reduce Vibrations," *ASME J. of Mechanical Design,* vol. 126, no. Jan., pp. 156-168, 2004.
[96] U. Andresen and W. Singhose, "A Simple Procedure for Modifying High-Speed Cam Profiles for Vibration Reduction," *ASME J. of Mechanical Design,* vol. 126, no. Nov., pp. 1105-1108, 2004.
[97] M. Kenison and W. Singhose, "Concurrent Design of Input Shaping and Proportional Plus Derivative Feedback Control," *ASME J. of Dynamic Systems, Measurement, and Control,* vol. 124, no. 3, pp. 398-405, 2002.
[98] A. Banerjee, N. Pedreiro, and W. Singhose, "Vibration Reduction for Flexible Spacecraft Following Momentum Dumping with/without Slewing," *AIAA J. of Guidance, Control, and Dynamics,* vol. 24, no. 3, pp. 417-428, 2001.
[99] W. Singhose, L. Porter, M. Kenison, and E. Kriikku, "Effects of Hoisting on the Input Shaping Control of Gantry Cranes," *IFAC Control Engineering Practice,* vol. 8, no. 10, pp. 1159-1165, 2000.
[100] R. A. Masterson, W. E. Singhose, and W. P. Seering, "Setpoint Generation for Constant-Velocity Motion of Space-Based Scanners," *AIAA J. of Guidance, Control, and Dynamics,* vol. 23, no. 5, pp. 892-895, 2000.
[101] K. Grosser and W. Singhose, "Command Generation for Reducing Perceived Lag in Flexible Telerobotic Arms," *JSME International Journal,* vol. 43, no. 3, pp. 755-761, 2000.
[102] W. Singhose, T. Singh, and W. Seering, "On-Off Control with Specified Fuel Usage," *ASME J. Dynamic Systems, Measurement, and Control,* vol. 121, no. 2, pp. 206- 212, 1999.
[103] W. Singhose, B. Mills, and W. Seering, "Closed-Form Methods for Generating On-Off Commands for Undamped Flexible Structures," *AIAA J. of Guidance, Control, and Dynamics,* vol. 22, no. 2, pp. 378-82, 1999.
[104] N. C. Singer, W. E. Singhose, and W. P. Seering, "Comparison of Filtering Methods for Reducing Residual Vibration," *European Journal of Control,* vol. 5, no. 2, pp. 208-219, 1999.
[105] L. Y. Pao and W. E. Singhose, "Robust Minimum Time Control of Flexible Structures," *Automatica,* vol. 34, no. 2, pp. 229-236, 1998.
[106] A. K. Banerjee and W. E. Singhose, "Command Shaping in Tracking Control of a Two-Link Flexible Robot," *AIAA J. of Guidance, Control, and Dynamics,* vol. 21, no. 6, pp. 1012-1015, 1998.
[107] W. E. Singhose, L. Y. Pao, and W. P. Seering, "Slewing Multi-Mode Flexible Spacecraft Using Zero Derivative Robustness Constraints," *AIAA J. of Guidance, Control, and Dynamics,* vol. 20, no. 1, pp. 204-206, 1997.
[108] W. E. Singhose, E. A. Crain, and W. P. Seering, "Convolved and Simultaneous Two-Mode Input Shapers," *IEE Control Theory and Applications,* vol. 144, no.

NJOY Exhibit 2022.280
Juul v. NJOY
IPR2024-00161

Nov., pp. 515-520, 1997. [Online]. Available: http://dx.doi.org/10.1049/ip-cta:19971439.
[109] W. Singhose, N. Singer, and W. Seering, "Time-Optimal Negative Input Shapers," *ASME J. Dynamic Systems, Measurement, and Control,* vol. 119, no. June, pp. 198-205, 1997.
[110] W. Singhose, L. J. Porter, T. D. Tuttle, and N. C. Singer, "Vibration Reduction Using Multi-Hump Input Shapers," *ASME J. Dynamic Systems, Measurement, and Control,* vol. 119, no. June, pp. 320-326, 1997.
[111] W. Singhose and L. Pao, "A Comparison of Input Shaping and Time-Optimal Flexible-Body Control," *IFAC Control Engineering Practice,* vol. 5, no. 4, pp. 459-467, 1997.
[112] W. Singhose, A. Banerjee, and W. Seering, "Slewing Flexible Spacecraft with Deflection-Limiting Input Shaping," *AIAA J. of Guidance, Control, and Dynamics,* vol. 20, no. 2, pp. 291-298, 1997.
[113] L. Y. Pao and W. E. Singhose, "Verifying Robust Time-Optimal Commands for Multi-Mode Flexible Spacecraft," *AIAA J. of Guidance, Control, and Dynamics,* vol. 20, no. 4, pp. 831-833, 1997.
[114] W. Singhose, N. Singer, and W. Seering, "Improving Repeatability of Coordinate Measuring Machines with Shaped Command Signals," *Precision Engineering,* vol. 18, no. April, pp. 138-146, 1996.
[115] W. Singhose and N. Singer, "Effects of Input Shaping on Two-Dimensional Trajectory Following," *IEEE Trans. on Robotics and Automation,* vol. 12, no. 6, pp. 881-887, 1996.
[116] W. Singhose, S. Derezinski, and N. Singer, "Extra-Insensitive Input Shapers for Controlling Flexible Spacecraft," *AIAA J. of Guidance, Control, and Dynamics,* vol. 19, no. 2, pp. 385-91, 1996.
[117] W. Singhose, K. Bohlke, and W. Seering, "Fuel-Efficient Pulse Command Profiles for Flexible Spacecraft," *AIAA J. of Guidance, Control, and Dynamics,* vol. 19, no. 4, pp. 954-960, 1996.
[118] W. Singhose, W. Seering, and N. Singer, "Residual Vibration Reduction Using Vector Diagrams to Generate Shaped Inputs," *ASME J. of Mechanical Design,* vol. 116, no. June, pp. 654-659, 1994.
[119] C. Yang, J. Huang, and W. Singhose, "Dynamic Modeling and Oscillation Control of Industrial Cranes Transporting Upright Slender Flexible Payloads," *Submitted to Mechanical Systems and Signal Processing*.
[120] K. Sorensen, J. Spiers, T. Hall, S. Dickerson, and W. Singhose, "Design and Performance Evaluation of a Visual Operator Interface for Cranes," *Submitted to Automation*.
[121] W. Singhose, "Diminishing Safety Margins of Telescoping-Boom Aerial Lifts," *Submitted to ASCE-ASME Journal of Risk and Uncertainty in Engineering Systems Part B: Mechanical Engineering*.

NJOY Exhibit 2022.281
Juul v. NJOY
IPR2024-00161

Refereed Conference Papers

[122] W. Singhose, C. Adams, A. Rana, D. Kim, and W. Li, "Use of Data-Mined Customer Reviews to Inform Design Evaluation and Testing of Bassinets," in *ASME International Design Engineering Technical Conferences*, Boston, MA, 2023.

[123] R. Schmidt, M. H. Guzman, F. Schlagenhauf, and W. Singhose, "Back-EMF Sensing of Linear Resonant Actuators for Detection of Tap-Induced Vibration," in *ASME International Design Engineering Technical Conferences*, Boston, MA, 2023.

[124] T. Rome, C. Adams, and W. Singhose, "Experimental Comparison of Manual and Automated Crane Control Through Obstacle Fields," in *IEEE/ASME International Conference on Advanced Intelligent Mechatronics (AIM)*, Seattle, WA, 2023.

[125] M. W. Lui, D. Kotten, E. Dushaj, and W. Singhose, "Improving Human Positioning Control of Oscillatory Systems," in *IEEE/ASME International Conference on Advanced Intelligent Mechatronics (AIM)*, Seattle, WA, 2023.

[126] A. Jenkins, D. V. Delden, W. Singhose, F. Schlagenhauf, and K. Dobson, "Controlling Human Perception of Haptic Profiles Using Contextual Cues," in *IEEE World Haptics Conference*, Delft, Netherlands, 2023.

[127] C. Adams and W. Singhose, "Stability Margins of Heavy-Lifting Machines with a Telescoping Boom and Jib," in *IEEE/ASME International Conference on Advanced Intelligent Mechatronics (AIM)*, Seattle, WA, 2023.

[128] T. Rome, W. S. K. D. K. Sorensen, F. Schlagenhauf, and J.-W. Kang, "Impact of Input Shaper Discretization on Linear Resonant Actuators for Haptic Feedback," in *IEEE International Symposium on Industrial Electronics*, Anchorage, AK, 2022.

[129] W. S. W. S. D. Frakes, "Soli Radar Image-Based Target Localization," in *IEEE Int. Conf. on Image Processing*, Bordeaux, France, 2022.

[130] F. Schlagenhauf, W. Singhose, K. Sorensen, and K. Dobson, "Command-shaping control of linear resonant actuators for haptic force generation," in *21st IFAC World Congress 2020, July 12, 2020 - July 17, 2020*, Berlin, Germany, 2020, vol. 53: Elsevier B.V., in IFAC-PapersOnLine, 2 ed., pp. 8675-8682, doi: 10.1016/j.ifacol.2020.12.303. [Online]. Available: http://dx.doi.org/10.1016/j.ifacol.2020.12.303

[131] S. Wang, A. Ferri, W. Singhose, and Y. Yang, "Control of Slender-Beam Payloads During Lift-Up Operations," in *ASME 2018 Dynamic Systems and Control Conference*, 2018, vol. Volume 3: Modeling and Validation; Multi-Agent and Networked Systems; Path Planning and Motion Control; Tracking Control Systems; Unmanned Aerial Vehicles (UAVs) and Application; Unmanned Ground and Aerial Vehicles; Vibration in Mechanical Systems; Vibrations and Control of Systems; Vibrations: Modeling, Analysis, and Control, V003T40A003, doi:

NJOY Exhibit 2022.282
Juul v. NJOY
IPR2024-00161

10.1115/dscc2018-8967. [Online]. Available: https://doi.org/10.1115/DSCC2018-8967
[132] K. Sorensen and W. Singhose, "Wheeled Inverted Pendulum Control and Slip Dynamics," in *IEEE Int. Conf. on Control and Automation*, Anchorage, Alaska, 2018.
[133] F. Schlagenhauf, S. Sreeram, and W. Singhose, "Comparison of Kinect and Vicon Motion Capture of Upper-Body Joint Angle Tracking," in *IEEE Int. Conf. on Control and Automation*, Anchorage, Alaska, 2018.
[134] F. Schlagenhauf and W. Singhose, "Comparison of Sway Reduction Controllers for Construction Cranes," in *IEEE Int. Conf. on Control and Automation*, Anchorage, Alaska, 2018.
[135] P. P. Sahoo and W. Singhose, "Effects of Input Shaping on Impact Loads During Collisions Involving Flexible Robots," in *IEEE Int. Conf. on Control and Automation*, Anchorage, Alaska, 2018.
[136] N. Johnson and W. Singhose, "Dynamics and Modeling of a Quadrotor with a Suspended Payload " in *AIAA Aviation Forum Applied Aerodynamics Conference*, Atlanta, GA, 2018.
[137] S. Ichikawa, A. Castro, N. Johnson, H. Kojima, and W. Singhose, "Dynamics and command shaping control of quadcopters carrying suspended loads," in *14th IFAC Workshop on Time Delay Systems TDS (IFAC-PapersOnLine)*, Budapest, Hungary, 2018, vol. 51, no. 14, pp. 84 - 88.
[138] F. Schlagenhauf, P. P. Sahoo, and W. Singhose, "Comparison of Single-Kinect and Dual-Kinect Motion Capture of Upper-Body Joint Tracking," in *Asian Control Conference*, Gold Coast, Australia, 2017.
[139] S. Rishmawi and W. Singhose, "Control of Robotic Crawler Cranes in Tandem Lifting Operations," in *Future Technologies Conference*, Vancouver, Canada, 2017.
[140] A. Kivila, J. Burgin, W. Book, and W. Singhose, "Development and Verification of a 2-Link Flexible Serial Arm Testbed for 3D Spatial Movements," in *IEEE 11th Asian Control Conference*, Gold Coast, Australia, 2017: IEEE.
[141] S. Grazioso, G. D. Gironimo, W. Singhose, and B. Siciliano, "Input Predictive Shaping for Vibration Control in Flexible Systems," in *IEEE Conference on Control Technology and Applications*, Kohala Coast, Hawai'i, USA, 2017.
[142] A. Castro, W. Singhose, X. Liu, K. Sorensen, and E. C. Kwak, "Modeling and Experimental Testing of Hoverboard Dynamic Behavior," in *ASME Dynamic Systems and Control Conference*, Tysons Corner, Virginia, 2017.
[143] A. S. Miller, W. Singhose, and U. Glauser, "Integrating PLC Theory and Programming into Advanced Controls Courses," in *American Control Conference*, Boston, MA, 2016.
[144] R. Khodambashi, G. Weinberg, W. Singhose, S. Rishmawi, V. Murali, and E. Kim, "User oriented assessment of vibration suppression by command shaping in a

NJOY Exhibit 2022.283
Juul v. NJOY
IPR2024-00161

supernumerary wearable robotic arm," in *IEEE-RAS International Conference on Humanoid Robots*, Cancun, Mexico, Nov 15-17 2016.
[145] Y. Hu, D. Han, L. Ling, T. Kurfess, W. Singhose, and J. Vaughan, "Case Study: Comparison of Project-based, Creative Engineering Courses at Georgia Tech and Huazhong University of Science and Technology," in *Int. Conf. on Engineering Education and Research*, Sydney, Australia, Nov. 21-24 2016.
[146] W. Singhose, K. Peng, A. Garcia, and A. Ferri, "Dynamics and Control of Crane Payload Lift-off and Lay-down Operations," in *International Conference on Material Handling, Constructions and Logistics*, Vienna, Austria, 2015.
[147] S. Rishmawi and W. Singhose, "Static Tip-Over Stability of Crawler Cranes with Moveable Counterweights," in *International Conference on Material Handling, Constructions and Logistics*, Vienna, Austria, 2015.
[148] C. Rhee, A. Miller, and W. Singhose, "Operator Testing on Dual-Hoist Cranes Moving Triangular Payloads," in *ASME Dynamic Systems and Control Conference*, Columbus, OH, 2015.
[149] K. Peng and W. Singhose, "Prediction and Measurement of Payload Swing from Off-Centered Crane Lifts," in *ASME IDETC, 11th International Conference on Multibody Systems, Nonlinear Dynamics, and Control*, Boston, MA, 2015.
[150] R. Mar, A. Goyal, V. Nguyen, T. Yang, and W. Singhose, "Combined Input Shaping and Feedback Control of a Double-Pendulum System Subject to External Disturbances," in *Dynamic Systems and Control Conference*, Columbus, OH, 2015.
[151] A. Kivila, J. Potter, and W. Singhose, "Manual Tracking Using Touchscreen Interfaces," in *Asian Control Conference*, Kota Kinabalu, Malaysia, 2015.
[152] Y. Hu, T. Kurfess, W. Singhose, D. Frakes, and B. Wu, "Design of a Hands-on Mechatronic Project Integrated into an Introductory Course," in *19th Int. Conf. on Engineering Education*, Zagreb, Croatia, 2015.
[153] J. Harber, C. Adams, A. Castro, and W. Singhose, "Dynamic Effects of Obstacles on Two-Wheeled Inverted-Pendulum Transporters," in *ASME International Design Engineering Technical Conferences*, Boston, MA, 2015.
[154] A. Garcia, W. Singhose, and A. Ferri, "Dynamics and Control of Off-Centered Crane Lifts," in *Asian Control Conference*, Kota Kinabalu, Malaysia, 2015.
[155] A. Garcia, W. Singhose, and A. Ferri, "Three-Dimensional Modeling and Experimental Verification of Off-Centered Crane Lifts," in *Dynamic Systems and Control Conference*, Columbus, OH, 2015.
[156] D. Fujioka and W. Singhose, "Input-Shaped Model Reference Control of a Nonlinear Time-Varying Double-Pendulum Crane," in *Asian Control Conference*, Kota Kinabalu, Malaysia, 2015.
[157] D. Fujioka and W. Singhose, "Performance Comparison of Input-Shaped Model Reference Control on an Uncertain Flexible System," in *IFAC Workshop on Time Delay Systems*, Ann Arbor, MI, 2015.

NJOY Exhibit 2022.284
Juul v. NJOY
IPR2024-00161

[158] D. Fujioka, M. Shah, and W. Singhose, "Robustness Analysis of Input-Shaped Model Reference Control on a Double-Pendulum Crane," in *American Control Conference*, Chicago, IL, 2015.
[159] W. Singhose, A. Kivila, and W. Seering, "Development of an Interactive Textbook for Command-Shaping Control Methods," in *Hawaii Education and STEM Conference*, Honolulu, HI, 2014.
[160] W. Singhose, D. Kim, and J. Vaughan, "Post-Ejection Failure Mode of Post Driving Machines," in *International Scientific Conference Heavy Machinery*, Zlatibor, Serbia, 2014.
[161] W. Singhose, J. Donnell, and A. Kivila, "An Interactive Textbook for Introductory Engineering Design," in *Int. Conference on Computer Supported Education*, Barcelona, Spain, 2014.
[162] J. J. Potter and W. Singhose, "Reduced-Modification Input Shapers for Manually Controlled Systems with Flexibility," in *American Control Conference*, Portland, OR, 2014.
[163] J. Potter, W. Singhose, A. AlSaibie, and A. Kivila, "Fostering Global Collaboration between Engineering Students through a Robotic Design Competition," in *Hawaii Education and STEM Conference*, Honolulu, HI, 2014.
[164] A. Miller, P. Sarvepalli, and W. Singhose, "Dynamics and Control of Dual-Hoist Cranes Moving Triangular Payloads," in *ASME Dynamic Systems and Control Conference*, San Antonio, TX, 2014.
[165] H. Liu and W. Singhose, "Tip-over stability of crawler cranes with moveable counterweights," in *International Scientific Conference Heavy Machinery*, Zlatibor, Serbia, 2014.
[166] Y. Hu, W. Singhose, T. Kurfess, B. Wu, J. R. Mayor, and J. A. Donnell, "Introductory Mechatronics Creative Decision and Design Tools—the Design and Realization of a Mechatronics Course," in *ICEE/ICIT Conference on Engineering Education and International Conference on Information Technology*, Riga, Latvia, 2014.
[167] Y. Hu, L. Ling, T. Kurfess, W. Singhose, and B. Wu, "International Collaboration Teaching Method for Mechatronic Innovation Decision-making and Design Tools," in *International Conference on Engineering Education and Research*, Hamilton, Canada, 2014.
[168] D. Fujioka and W. Singhose, "Control Effort Reduction Analysis of Zero-Vibration Model Reference Control for Controlling a Time-Varying Plant," in *American Control Conference*, Portland, OR, 2014.
[169] J. Vaughan, J. Yoo, N. Knight, and W. Singhose, "Multi-Input Shaping Control for Multi-Hoist Cranes," in *American Control Conference*, Washington, DC, 2013.
[170] W. Singhose, J. Donnell, and A. Kivila, "Development of an Interactive Textbook for Introductory Mechanical Design," in *Int. Symp. on Mechatronics and its Applications*, Amman, Jordan, 2013.

NJOY Exhibit 2022.285
Juul v. NJOY
IPR2024-00161

[171] J. J. Potter, R. Simpson, and W. Singhose, "Dynamic Modeling and Simulation of a Remote-Controlled Helicopter with a Suspended Load," in *ASME Dynamic Systems and Control Conference*, Stanford, CA, 2013.
[172] J. J. Potter, C. J. Adams, and W. Singhose, "An Experimental Remote-Controlled Helicopter with Suspended Load," in *2013 Int. Symp. on Mechatronics and its Applications*, Amman, Jordan, 2013.
[173] K. C.-C. Peng and W. Singhose, "Low-Oscillation Command Switch-Times for Relay-Driven Cranes with Asymmetrical Acceleration and Deceleration," in *Asian Control Conference*, Istanbul, Turkey, 2013.
[174] E. Maleki, W. Singhose, J. Hawke, and J. Vaughan, "Dynamic Response of a Dual-Hoist Bridge Crane," in *ASME Dynamic Systems and Control Conference*, Stanford, CA, 2013.
[175] E. Maleki and W. Singhose, "Maximizing the Swing of a Human-Operated Wrecking Ball," in *IEEE Int. Conference on Industrial Technology*, Cape Town, South Africa, 2013.
[176] A. Kivila and W. Singhose, "Touchscreen Crane Control Interfaces with Oscillation Suppression," in *IEEE Conf. on Decision and Control*, Florence, Italy, 2013.
[177] A. Kivila, C. Porter, and W. Singhose, "Human Operator Studies of Portable Touchscreen Crane Control Interfaces," in *IEEE Int. Conference on Industrial Technology* Cape Town, South Africa, 2013.
[178] Y. Hu, B. Wu, J. Vaughan, and W. Singhose, "Oscillation Suppression for an Energy Efficient Bridge Crane Using Input Shaping " in *Asian Control Conference*, Istanbul, Turkey, 2013.
[179] Y. Hu, W. Singhose, B. Wu, L. Zhou, and L. He, "Practice Competence Training in Mechatronics Engineering Education under the Cooperation Project Between HUST and GATECH," in *Int. Conference on Engineering Education and Research*, Marrakesh, Morocco, 2013.
[180] D. Frakes, C. Zwart, and W. Singhose, "Analyzing Accident Videos with Optical Flow and Physically-Based Constraints," in *ASME Summer Bioengineering Conference*, Sunriver, OR, 2013.
[181] A. Castro, C. Adams, and W. Singhose, "Dynamic Response Characteristics of a Two-Wheeled Inverted-Pendulum Transporter," in *IEEE Conf. on Decision and Control*, Florence, Italy, 2013.
[182] A. AlSaibie and W. Singhose, "Experimental Testing of Liquid Slosh Suppression in a Suspended Container with Compound Pendulum Dynamics," in *Asian Control Conference*, Istanbul, Turkey, 2013.
[183] C. Adams, W. Singhose, and D. Kim, "A System-Dynamics-Based Hazard Analysis of Inverted-Pendulum Human Transporters," in *ASME Dynamic Systems and Control Conference*, Stanford, CA, 2013.

NJOY Exhibit 2022.286
Juul v. NJOY
IPR2024-00161

[184] B. Xiao, Q. Hu, and W. Singhose, "Adaptive Compensation Control for Spacecraft Attitude Stabilization with Actuator Misalignment and Faults," in *AIAA Guidance, Navigation, and Control Conference*, Minneapolis, MN, 2012.
[185] J. Vaughan, J. Yoo, and W. Singhose, "Using Approximate Multi-crane Frequencies for Input Shaper Design," in *Int. Conference on Control, Automation and Systems*, Jeju, Korea, 2012.
[186] J. Vaughan, J. Yoo, N. Knight, and W. Singhose, "Dynamics and Control of Multiple Cranes with a Connected Payload," in *Int. Congress on Sound and Vibration*, Vilnius, Lithuania, 2012.
[187] J. Vaughan, K. C. C. Peng, W. Singhose, and W. Seering, "Influence of Remote-Operation Time Delay on Crane Operator Performance," in *IFAC Workshop on Time Delay Systems*, Boston, MA, 2012.
[188] S. Ragunathan, W. Singhose, K. C. C. Peng, L. Stokes, and D. Frakes, "Kalman Filtering for Improving Radio-Frequency Hand Motion Crane Control," in *ASME Dynamic Systems and Control Conference*, Ft. Lauderdale, FL, 2012.
[189] J. J. Potter and W. Singhose, "Effects of Input Shaping on Manual Tracking with Oscillatory Controlled-Element Dynamics," in *American Control Conference*, Montréal, Canada, 2012.
[190] J. J. Potter and W. Singhose, "Using Manual Tracking Performance to Tune a Specified-Negative-Amplitude Input Shaper," in *IEEE Conference on Systems, Man, and Cybernetics*, Seoul, Korea, 2012.
[191] J. Potter and W. Singhose, "Effects of Input Shaping on Manual Tracking with Flexible and Time-Delayed System Dynamics," in *IFAC Workshop on Time Delay Systems*, Boston, MA, 2012.
[192] K. C. C. Peng, W. Singhose, and S. S. Gürleyük, "Initial Investigations of Hand-Motion Crane Control with Double-Pendulum Payloads," in *American Control Conference*, Montréal, Canada, 2012.
[193] K. C.-C. Peng and W. Singhose, "Stability Analysis of a Hand-Motion Crane Controller Using Describing Functions: An Initial Investigation," in *Int. Congress on Sound and Vibration*, Vilnius, Lithuania, 2012.
[194] A. S. Murthy, A. Kivila, and W. Singhose, "Slosh Suppression of a Liquid in a Suspended Container Using Robust Input Shaping," in *Int. Congress on Sound and Vibration*, Vilnius, Lithuania, 2012.
[195] G. Mann, P. Danilochkin, and W. Singhose, "Attenuation of Initial Oscillation in Bridge Cranes via Input-Shaping-Based Feedback Control Methods," in *ASME Dynamic Systems and Control Conference*, Ft. Lauderdale, FL, 2012.
[196] E. Maleki, F. Bazerghi, W. Singhose, and S. Gürleyük, "Shaping Commands to Maximize Pendulum Swing," in *Int. Congress on Sound and Vibration*, Vilnius, Lithuania, 2012.

NJOY Exhibit 2022.287
Juul v. NJOY
IPR2024-00161

[197] S.-W. Hong and W. Singhose, "Command Shaper Design for Transverse Vibration Suppression of Axially-Extending Cantilever Beams Under Gravity," in *Int. Congress on Sound and Vibration*, Vilnius, Lithuania, 2012.
[198] S.-W. Hong, Y.-K. Seo, and W. Singhose, "A New Command Shaper Design for Residual Vibration Reduction in Flexible Systems Using Artificial Mode Constraints," in *Int. Conf. on Mechanical, Industrial, and Manufacturing Technologies*, Shenzhen, China, 2012.
[199] A. Castro, W. Singhose, J. J. Potter, and C. Adams, "Modeling and Experimental Testing of a Two-Wheeled Inverted-Pendulum Transporter " in *ASME Dynamic Systems and Control Conference*, Ft. Lauderdale, FL, 2012.
[200] C. Adams, J. Potter, and W. Singhose, "Modeling and Input Shaping Control of a Micro Coaxial Radio-Controlled Helicopter Carrying a Suspended Load," in *Int. Conference on Control, Automation and Systems*, Jeju, Korea, 2012.
[201] A. E. Vela, E. Salaun, E. Feron, W. Singhose, and J.-P. Clarke, "Bounds on Controller Taskload Rates at an Intersection for Dense Traffic," in *2011 American Control Conference*, San Francisco, CA, 2011, pp. 2745-51.
[202] A. Vela, J. P. Clarke, E. Feron, and W. Singhose, "The relative value of trajectory prediction and conflict-resolution algorithms," in *2011 IEEE/AIAA 30th Digital Avionics Systems Conference* Seattle, WA, 2011: IEEE, in 2011 IEEE/AIAA 30th Digital Avionics Systems Conference (DASC), pp. 6-1.
[203] A. Vela, J.-P. Clarke, N. Durand, E. Feron, and W. Singhose, "Determining the Value of Information for Minimizing Controller Taskload: A Graph-Based Approach," in *USA/Europe Seminar on Air Traffic Management Research and Development*, Berlin, Germany 2011.
[204] J. Vaughan, A. Karajgikar, and W. Singhose, "A Study of Crane Operator Performance Comparing PD-Control and Input Shaping," in *American Control Conference*, San Francisco, CA, 2011.
[205] S. Ragunathan, K. C. C. Peng, W. Singhose, and D. Frakes, "Improving Energy Efficiency of Cranes Driven by Noisy Control Signals," in *Multibody Dynamics Conference*, Brussels, Belgium, 2011.
[206] S. Ragunathan, D. Frakes, K. Peng, and W. Singhose, "Filtering Effects on Input-Shaped Command Signals for Effective Crane Control," in *IEEE International Conference on Control and Automation*, Santiago, Chile, 2011.
[207] B. Pridgen, E. Maleki, W. Singhose, W. Seering, U. Glauser, and L. Kaufmann, "A Small-Scale Cherrypicker for Experimental and Educational Use," in *American Control Conference*, San Francisco, CA, 2011.
[208] J. Potter, W. Singhose, and M. Costello, "Reducing Swing of Model Helicopter Sling Load Using Input Shaping," in *IEEE International Conference on Control and Automation*, Santiago, Chile, 2011.

NJOY Exhibit 2022.288
Juul v. NJOY
IPR2024-00161

[209] B. Post, A. Mariuzza, W. Book, and W. Singhose, "Faltness-Based Control of Flexible Motion Systems," in *ASME Dynamic Systems and Control Conference*, Washington, DC, 2011.
[210] J. Pasternack *et al.*, "Experimental Analysis for Wind Induced Disturbance Rejection on Bridge Crane Structures," in *ASME Dynamic Systems and Control Conference*, Washington, DC, 2011.
[211] E. Maleki and W. Singhose, "Control of the Mobile Base of a Small-Scale Boom Crane," in *Multibody Dynamics Conference*, Brussels, Belgium, 2011.
[212] A. Karajgikar, J. Vaughan, and W. Singhose, "Double-Pendulum Crane Operator Performance Comparing PD-Feedback Control and Input Shaping," in *Multibody Dynamics Conference*, Brussels, Belgium, 2011.
[213] J. Hongxia, L. Wanli, and W. Singhose, "Using Two-mode Input Shaping to Suppress the Residual Vibration of Cherry Pickers," in *Int. Conf. on Measuring Technology and Mechatronics Automation*, Shanghai, China, 2011.
[214] D. Fujioka, E. Maleki, and W. Singhose, "Tip-Over Stability of a Portable Cherrypicker," in *Multibody Dynamics Conference*, Brussels, Belgium, 2011.
[215] A. E. Vela *et al.*, "Determining Bounds on Controller Workload Rates at an Intersection," in *American Control Conference*, Baltimore, MD, 2010.
[216] A. E. Vela, E. Salaun, P. Burgain, W. Singhose, J.-P. Clarke, and E. Feron, "Predicting Controller Communication Time for Capacity Estimation," in *Int. Conference on Research in Air Transportation*, Budapest, Hungary, 2010.
[217] A. E. Vela, E. Feron, W. Singhose, and J.-P. Clarke, "Control of Holding Patterns for Increased Throughput and Recovery of Operations," in *Digital Avionics Systems Conference*, Salt Lake City, UT, 2010.
[218] A. Vela, E. Salaün, S. Solak, E. Feron, W. Singhose, and J.-P. Clarke, "Maximizing Throughput at an Intersection under Constrained Maneuvers," in *IEEE Conference on Decision and Control*, Atlanta, GA, 2010, pp. 1207-1214.
[219] J. Vaughan and W. Singhose, "Reducing Multiple Modes of Vibration by Digital Filtering and Input Shaping," in *Dynamic Systems and Control Conference*, Cambridge, MA, 2010.
[220] J. Vaughan, E. Maleki, and W. Singhose, "Advantages of Using Command Shaping Over Feedback for Crane Control," in *American Control Conference*, Baltimore, MD, 2010.
[221] D. C. Ujueta, K. C. C. Peng, W. Singhose, and D. Frakes, "Determination of Control Parameters for a Radio-Frequency Based Crane Controller " in *IEEE Conf. on Decision and Control*, Atlanta, GA, 2010.
[222] W. Singhose, J. d. J. Márquez, J. Vaughan, and B. Pridgen, "Use of Tele-Robotic Cranes in International Collaborative Education," in *IASTED Int. Conference on Robotics and Applications*, Cambridge, MA, 2010.

NJOY Exhibit 2022.289
Juul v. NJOY
IPR2024-00161

[223] B. Pridgen and W. Singhose, "Comparison of Polynomial Cam Profiles and Input Shaping for Vibration Reduction," in *International Congress on Sound and Vibration*, Cairo, Egypt, 2010.
[224] B. Pridgen, K. Bai, and W. Singhose, "Slosh Suppression by Robust Input Shaping," in *IEEE Conf. on Decision and Control*, Atlanta, GA, 2010.
[225] J. J. Potter, K. L. Sorensen, and W. E. Singhose, "Efficient Method for Generating Pick-and-Place Trajectory Over Obstacles," in *IASTED Int. Conference on Robotics and Applications*, Cambridge, MA, 2010.
[226] K. C. C. Peng, K. Sorensen, and W. Singhose, "Sway Control of a Relay-Driven Crane with Asymmetrical Acceleration and Deceleration," in *IASTED Conf. on Robotics and Applications*, Cambridge, MA, 2010.
[227] K. C. C. Peng and W. Singhose, "A Vision-Based Predictive Hook-Tracker for Industrial Cranes," in *International Congress on Sound and Vibration*, Cairo, Egypt, 2010.
[228] E. Maleki, W. Singhose, and S. Srinivasan, "Positioning and Control of Boom Crane Luffing with Double-Pendulum Payloads," in *IEEE Conference on Control Applications*, Yokohama, Japan, 2010.
[229] E. Maleki and W. Singhose, "Dynamics and Zero Vibration Input Shaping Control of a Small-Scale Boom Crane," in *American Control Conference*, Baltimore, MD, 2010.
[230] E. Maleki and W. Singhose, "Operator Performance Studies on a Small-Scale Mobile Boom Crane," in *International Congress on Sound and Vibration*, Cairo, Egypt, 2010.
[231] E. Maleki, B. Pridgen, J. Q. Xiong, and W. Singhose, "Dynamic Analysis and Control of a Portable Cherrypicker," in *Dynamic Systems and Control Conference*, Cambridge, MA, 2010.
[232] J. Yoon, W. Singhose, M. D. Kim, G. Ramirez, and S. K. Tawde, "Dynamics and Control of Bouncing and Tilting Crane Payloads," in *ASME IDETC*, San Diego, CA, 2009.
[233] A. Vela, S. Solak, W. Singhose, and J.-P. Clarke, "A Mixed Integer Program for Flight-Level Assignment and Speed Control for Conflict Resolution," in *IEEE Conference on Decision and Control*, Shanghai, China, 2009.
[234] A. Vela, S. Solak, E. Feron, K. Feigh, W. Singhose, and J.-P. Clarke, "A Fuel Optimal and Reduced Controller Workload Optimization Model for Conflict Resolution," in *Digital Avionics Systems Conference*, Orlando, Florida, 2009.
[235] A. Vela, E. Salaun, S. Solak, E. Feron, W. Singhose, and J.-P. Clarke, "A Two-Stage Stochastic Optimization Model for Air Traffic Conflict Resolution under Wind Uncertainty," in *Digital Avionics Systems Conference*, Orlando, Florida, 2009.

NJOY Exhibit 2022.290
Juul v. NJOY
IPR2024-00161

[236] J. Vaughan, A. Smith, and W. Singhose, "Using a Predictive Graphical User Interface to Improve Tower Crane Performance," in *IASTED Int. Conference on Robotics and Applications*, Cambridge, MA, 2009.
[237] J. Vaughan and W. Singhose, "Input Shapers for Reducing Overshoot in Human-Operated Flexible Systems," in *American Control Conference*, St. Louis, MO, 2009.
[238] J. Vaughan and W. Singhose, "Reducing Vibration and Providing Robustness with Multi-Input Shapers," in *American Control Conference*, St. Louis, MO, 2009.
[239] W. Singhose, A. Vela, and D. Kim, "Comparison of Residual-Vibration and Energy-Minimizing Control Methods for Command Generation," in *IEEE Conference on Decision and Control*, Shanghai, China, 2009.
[240] W. Singhose, J. Vaughan, and R. Mayor, "Use of Design Competitions in Mechatronics Education," in *IEEE International Conference on Mechatronics*, Malaga, Spain, 2009.
[241] K. C. C. Peng, W. Singhose, S. Gessesse, and D. Frakes, "Crane Operation Using Hand-Motion and Radio Frequency Identification Tags," in *IEEE Int. Conference on Control and Automation*, Christchurch, New Zealand, 2009.
[242] K. C. C. Peng, W. Singhose, and J. Fonseca, "Crane Operation using Hand Motion and Machine Vision," in *ASME Dynamic Systems and Control Conference*, Hollywood, CA, 2009.
[243] K. C. C. Peng and W. Singhose, "Crane Control Using Machine Vision and Wand Following," in *IEEE International Conference on Mechatronics*, Malaga, Spain, 2009.
[244] J. d. J. Márquez, D. Kim, and W. Singhose, "An Examination of the Trajectories Traveled by Two-Mode Flexible Systems," in *IASTED Int. Conference on Robotics and Applications*, Cambridge, MA, 2009.
[245] E. Maleki and W. Singhose, "Initial Experiments with a Small-Scale Mobile Boom Crane," in *IASTED Int. Conference on Robotics and Applications*, Cambridge, MA, 2009.
[246] D. Fujioka, A. Rauch, W. Singhose, and T. Jones, "Stability Analysis of Mobile Boom Cranes with Double-Pendulum Payloads," in *American Control Conference*, St. Louis, MO, 2009.
[247] M. Freese, S. Singh, W. Singhose, E. Fukushima, and S. Hirose, "Terrain Modeling and Following Using a Compliant Manipulator for Humanitarian Demining Applications," in *Int. Conference on Field and Service Robots*, Cambridge, MA, 2009.
[248] A. Dhanda, J. Vaughan, and W. Singhose, "Optimal Input Shaping Filters for Non-Zero Initial States," in *American Control Conference*, St. Loius,MO, 2009.
[249] J. Vaughan, A. Yano, and W. Singhose, "Performance Comparison of Robust Negative Input Shapers," in *American Control Conference*, Seattle, WA, 2008.

NJOY Exhibit 2022.291
Juul v. NJOY
IPR2024-00161

[250] J. Vaughan and W. Singhose, "Comparison of Command Filtering Methods for Vibration Reduction in Automated Manufacturing Machines," in *ASME Int. Symposium on Flexible Automation*, Atlanta, GA, 2008.
[251] J. Vaughan, A. Daftari, and W. Singhose, "The Influence of Input Shaper Duration on Bridge Crane Operator Performance," in *International Conference on Motion and Vibration Control*, Munich, Germany, 2008.
[252] Y.-G. Sung and W. Singhose, "Deflection-Limiting Commands to Slew Flexible Systems with Velocity Limits," in *International Conference on Control, Automation and Systems*, Seoul, Korea, 2008.
[253] K. L. Sorensen, J. Danielson, and W. E. Singhose, "Anti-Sway and Positioning Control For An Industrial Bridge Crane With Multi-Mode Dynamics," in *ASME International Symposium on Flexible Automation*, Atlanta, GA, 2008.
[254] K. Sorensen and W. Singhose, "A Multi-Operational-Mode Anti-Sway & Positioning Control for an Industrial 30-Ton Bridge Crane," in *IFAC World Congress*, Seoul, Korea, 2008.
[255] W. Singhose, J. Vaughan, J. Danielson, and J. Lawrence, "Use of Cranes in System Dynamics and Controls Education," in *IFAC World Congress*, Seoul, Korea, 2008.
[256] A. Rauch and W. Singhose, "Stability Analysis of Mobile Boom Cranes," in *International Conference on Motion and Vibration Control*, Munich, Germany, 2008.
[257] R. Manning, D. Kim, and W. Singhose, "Reduction of Distributed Payload Bridge Crane Oscillations," in *WSEAS International Conference on Automatic Control, Modeling, and Simulation*, Istanbul, Turkey, 2008.
[258] S. W. Hong, S. W. Park, and W. E. Singhose, "A method of input shaper design for residual vibration reduction using virtual mode concept," in *International Congress on Sound and Vibration*, Daejon, Korea, 2008, pp. 1712-1718.
[259] U. Glauser, L. Widler, R. Weiss, J. Vaughan, and W. Singhose, "Conducting International Research Projects Using Undergraduate Thesis Projects," in *International Symposium on Flexible Automation*, Atlanta, GA, 2008.
[260] J. Danielson, J. Vaughan, W. Singhose, L. Widler, and U. Glauser, "Design of a Mobile Boom Crane for Research and Educational Applications," in *International Conference on Motion and Vibration Control*, Munich, Germany, 2008.
[261] P. Andersch, K. Sorensen, and W. Singhose, "Effects of Rate Limiting on Common Input Shaping Filters," in *WSEAS Int. Conf. on Automatic Control, Modelling, and Simulation*, Istanbul, Turkey, 2008.
[262] J. Vaughan, A. Yano, and W. Singhose, "Performance Comparison of Robust Input Shapers," in *IEEE International Conference on Control and Automation*, Guangzhou, China, 2007.
[263] J. Vaughan, W. Singhose, P. Debenest, E. Fukushima, and S. Hirose, "Initial Experiments on the Control of a Mobile Tower Crane," in *ASME IMECE*, Seattle, WA, 2007.

NJOY Exhibit 2022.292
Juul v. NJOY
IPR2024-00161

[264] J. Suter, D. Kim, W. Singhose, K. Sorensen, and U. Glauser, "Evaluation and Integration of a Wireless Touchscreen Into a Bridge Crane Control System," in *IEEE/ASME Int. Conf. on Advanced Intelligent Mechatronics*, Zürich, Switzerland, 2007, p. 4412586.
[265] Y.-G. Sung and W. Singhose, "Closed-Form Specified-Fuel Commands for Two-Mode Systems," in *IEEE International Conference on Control and Automation*, Guangzhou, China, 2007.
[266] Y.-G. Sung and W. Singhose, "Two-State Actuator Commands for Moving Two-Mode Flexible Systems," in *IASTED Intelligent Systems and Control*, Boston, MA, 2007.
[267] K. L. Sorensen, J. B. Spiers, and W. E. Singhose, "Operational Effects of Crane Interface Devices " in *IEEE Conference on Industrial Electronics and Applications*, Harbin, China, 2007.
[268] K. L. Sorensen and W. E. Singhose, "Oscillatory Effects of Common Hard Nonlinearities on Systems Using Two-Impulse ZV Input Shaping," in *American Control Conference*, New York, NY, 2007.
[269] K. L. Sorensen, P. W. Cross, W. E. Singhose, and S. Prakash, "Analysis and Mitigation of Dead-Zone Effects on Systems Using Two-Impulse ZV Input Shaping," in *ASME Int. Design Engineering Technical Conferences*, Las Vegas, NV, 2007.
[270] W. Singhose, J. Vaughan, J. Danielson, and J. Lawrence, "The Use of Tele-operated Cranes for Advanced Controls Education," in *ASME IMECE*, Seattle, WA, 2007.
[271] W. Singhose and K. Sorensen, "Manipulation of Flexible Space Structures: Effects of Command Shaping and Human Interfaces," in *2007 ICRA Workshop on Space Robotics*, Rome, Italy, 2007.
[272] W. Singhose and D. Kim, "Manipulation with Tower Cranes Exhibiting Double-Pendulum Oscillations," in *IEEE Int. Conf. on Robotics and Automation*, Rome, Italy, 2007.
[273] S. W. Park, S. W. Hong, H. S. Choi, and W. E. Singhose, "A Study on Dynamic Performance of Precise XY Stages Using Real-Time Input Shaping," in *Int. Symp. on Measurement Technology and Intelligent Instruments*, Sendai, Japan, 2007.
[274] D. Kim and W. Singhose, "Studies of Human Operators Manipulating Double-Pendulum Cranes," in *European Control Conference*, Kos, Greece, 2007, p. WeC10.1.
[275] D. Kim and W. Singhose, "Human Operator Learning On Double-Pendulum Bridge Cranes," in *ASME IMECE*, Seattle, WA, 2007.
[276] M. Freese, E. Fukushima, S. Hirose, and W. Singhose, "Endpoint Vibration Control of a Mobile Mine-Detecting Robotic Manipulator," in *American Control Conference*, New York, NY, 2007.

NJOY Exhibit 2022.293
Juul v. NJOY
IPR2024-00161

[277] J. Danielson, J. Lawrence, and W. Singhose, "Command Shaping for Flexible Systems with Constant Acceleration," in *IEEE Conference on Industrial Electronics and Applications*, Harbin, China, 2007.
[278] J. Vaughan and W. Singhose, "Modeling and Control of a Mobile Tower Crane," in *Int. Conf. on Advances in Mechanical Engineering and Mechanics*, Hammamet, Tunisia, 2006.
[279] J. Vaughan and W. Singhose, "ARLISS: A Multidisciplinary Extracurricular Design Project for Undergraduates," in *American Society for Engineering Education Annual Conf.*, Chicago, IL, 2006.
[280] A. Timm, M. Robertson, W. Singhose, and K. Fujiwara, "Control of Elastic Tethers During Spin Up For Artificial Gravity," in *Third Asian Conference on Multibody Dynamics*, Tokyo, Japan, 2006.
[281] W. Singhose, "Crane Oscillation Control: Applications and Educational Uses," in *XVIII International Conference on Material Handling, Constructions and Logistics*, Belgrade, Serbia, 2006.
[282] M. Robertson and W. Singhose, "Robust Analytic Deflection-Limiting Commands," in *American Control Conference*, Minneapolis, MN, 2006.
[283] J. Lawrence, W. Singhose, R. Weiss, A. Erb, and U. Glauser, "An Internet-Driven Tower Crane for Dynamics and Controls Education," in *IFAC Symp. on Control Education*, Madrid, Spain, 2006.
[284] J. Lawrence, J. Danielson, and W. Singhose, "Design and Analysis of Input Shapers for Systems with a Braking Nonlinearity," in *Int. Symp. on Flexible Automation*, Osaka, Japan, 2006.
[285] D. Kim and W. Singhose, "Reduction of Double Pendulum Crane Oscillations," in *Int. Conf. on Motion and Vibration Control*, Daejeon, Korea, 2006.
[286] J. Huey *et al.*, "Remote Manipulation of Cranes via the Internet," in *Int. Conference on Motion and Vibration Control*, Daejeon, Korea, 2006.
[287] K. Hekman, C. Stäheli, K. Sorensen, and W. Singhose, "Measuring Crane Payload Swing Angle Through Computer Vision," in *Int. Symp. on Flexible Automation*, Osaka, Japan, 2006.
[288] K. Hekman and W. Singhose, "Suppression of Crane Payload Oscillation Using On-Off Commands," in *American Control Conference*, Minneapolis, MN, 2006.
[289] J. Fortgang, W. Singhose, and V. Patrangenaru, "Scheduling of Input Shaping and Transient Vibration Absorbers for High-Rise Elevators," in *American Control Conference*, Minneapolis, MN, 2006.
[290] T. Bradley, T. Hall, Q. Xie, W. Singhose, and J. Lawrence, "Input Shaping for Nonlinear Drive Systems," in *ASME Int. Mechanical Engineering Congress & Exposition*, Chicago, IL, 2006.
[291] D. Blackburn *et al.*, "Advanced Input Shaping Algorithm for Nonlinear Tower Crane Dynamics," in *Int. Conference on Motion and Vibration Control*, Daejeon, Korea, 2006.

NJOY Exhibit 2022.294
Juul v. NJOY
IPR2024-00161

[292] K. Sorensen, W. Singhose, and S. Dickerson, "A Controller Enabling Precise Positioning and Sway Reduction in Cranes with On-Off Actuation," in *IFAC World Congress*, Prague, Czech Republic, 2005.
[293] M. Robertson, J. Vaughan, W. Singhose, M. Pastirik, M. Usselman, and D. Llewellyn, "Involving High School Students in a University-Level Mechanical Engineering Design Competition " in *American Society for Engineering Education Annual Conference*, Portland, Oregon, 2005: American Society for Engineering Education, Chantilly, VA, pp. 9039-9049.
[294] M. Robertson, A. Timm, and W. Singhose, "Evaluation of Command Generation Techniques for Tethered Satellite Retrieval," in *AAS/AIAA Space Flight Mechanics Conference*, Copper Mountain, CO, 2005.
[295] M. Robertson and W. Singhose, "Evaluation of Analytic Deflection-Limiting Commands," in *IFAC World Congress*, Prague, Czech Republic, 2005.
[296] M. Robertson and W. Singhose, "Closed-Form Deflection-Limiting Commands," in *American Control Conference*, Portland, OR, 2005, vol. 3: IEEE, Piscataway, NJ, pp. 2104-9.
[297] J. Lawrence and W. Singhose, "Design of Minicrane for Education and Research," in *6th Int. Conference on Research and Education in Mechatronics*, Annecy, France, 2005.
[298] H. Kojima and W. Singhose, "Adaptive Deflection Limiting Control for Slewing Flexible Space Structures," in *56th Int. Astronautical Congress*, Fukuoka, Japan, 2005, vol. IAC-05-C2.7.02.
[299] J. R. Huey and W. Singhose, "Experimental Verification of Stability Analysis of Closed-Loop Input Shaping Controllers," in *IEEE/ASME Int. Conf. on Advanced Intelligent Mechatronics*, Monterey, CA, 2005, pp. 1587-1592.
[300] J. Huey and W. Singhose, "Stability Analysis of Closed-Loop Input Shaping Control," in *IFAC World Congress*, Prague, Czech Republic, 2005.
[301] S.-W. Hong, H. Seomoon, V. Patrangenaru, W. Singhose, and S. Sprigle, "An Efficient Method for Identification of Human-Generated Forces During Extensor Thrust," in *IASTED International Conference on Biomedical Engineering*, Innsbruck, Austria, 2005.
[302] S.-W. Hong, V. Patrangenaru, W. Singhose, and S. Sprigle, "Motion Measurement and Force Determination During Unconstrained Extensor Thrust," in *Rehabilitation Engineering and Assistive Technology Society of North America Annual Meeting*, Atlanta, GA, 2005.
[303] J. Fortgang, W. Singhose, and J. d. J. Márquez, "Command Shaping for Micro-Mills and CNC Controllers," in *American Control Conference*, Portland, OR, 2005.
[304] J. Fortgang and W. Singhose, "Input Shaping for Continuum Beams under Longitudinal Vibration," in *IEEE/ASME International Conference on Advanced Intelligent Mechatronics*, Monterey, CA, 2005.

NJOY Exhibit 2022.295
Juul v. NJOY
IPR2024-00161

[305] E. Biediger, J. Lawrence, and W. Singhose, "Improving Trajectory Tracking for Systems with Unobservable Modes Using Command Generation," in *American Control Conference*, Portland, OR, 2005, vol. 1: IEEE, pp. 513-18.
[306] J. Vaughan, W. Singhose, and N. Sadegh, "Examination of Variable Damping for Payload Compensation in Heavy Machinery," in *Seventh International Conference on Motion and Vibration Control*, St. Louis, MO, 2004.
[307] M. Robertson and W. Singhose, "Command Generation for Tether Retrieval," in *14th AAS/AIAA Space Flight Mechanics Conference*, Maui, Hawaii, 2004.
[308] J. d. J. Márquez, J. Fortgang, W. Singhose, and J. M. Perez, "Optimizacion del proceso de microfresado mediante el empleo de tecnicas de reduccion activa de vibraciones," in *XVI National Conference of Mechanical Engineering (Spain)*, Leon, Spain, Dec. 15-17, 2004 2004, pp. 2709-2714.
[309] J. Lawrence, W. Singhose, and K. Hekman, "Robust Friction-Compensating Input Shapers," in *8th Cairo Univ. Int. Conf. on Mechanical Design and Production*, Cairo, Egypt, 2004.
[310] J. Lawrence, M. Falkenberg, W. Singhose, and G. Peláez, "Input Shaping for a Flexible, Nonlinear, One-link Robotic Arm with Backlash," in *Japan–USA Symposium on Flexible Automation*, Denver, Colorado, 2004.
[311] H. Kojima, H. Fukudome, T. Watanabe, M. Robertson, and W. Singhose, "Adaptive Input Shaping Control for Slewing Flexible Space Structures," in *24th Int. Symp. on Space Technology and Science*, Miyazaki, Japan, 2004, pp. 474-479.
[312] S. Klooster, K. Kozak, J. Vaughan, P. Sanders, and W. Singhose, "Fluid Power Control of a Hyper-Active Seat for Low-Frequency Vibration Suppression," in *IFAC Symposium on Advances in Automotive Control*, Salerno, Italy, 2004.
[313] A. Khalid, W. Singhose, J. Huey, J. Lawrence, and D. Frakes, "Study of Operator Behavior and Performance Using an Input-Shaped Bridge Crane," in *IEEE Conference on Control Applications*, Taipei, Taiwan, 2004, vol. 1: IEEE, pp. 759-64.
[314] J. Huey and W. Singhose, "Design of Flexible Systems for Use with Input Shaping," in *Seventh International Conference on Motion and Vibration Control*, St. Louis, MO, 2004.
[315] K. Hekman, W. Singhose, and J. Lawrence, "Using Input Shaping to Suppress Controller and Structural Oscillations," in *Mechatronics 2004 9th Mechatronics Forum*, Ankara, Turkey, 2004.
[316] K. Hekman, W. Singhose, and J. Lawrence, "Input Shaping with Coulomb Friction Compensation on a Solder Cell Machine," in *American Control Conference*, Boston, MA, 2004, vol. 1: IEEE, pp. 728-33.
[317] J. Fortgang and W. Singhose, "Improving Trajectory Following Through Input Shaping of Internal Deflections," in *Seventh International Conference on Motion and Vibration Control*, St. Louis, MO, 2004.

NJOY Exhibit 2022.296
Juul v. NJOY
IPR2024-00161

[318] J. Fortgang, J. d. J. Marquez, and W. Singhose, "Application of Command Shaping on Micro-Mills," in *Japan – USA Symposium on Flexible Automation*, Denver, Colorado, 2004.
[319] J. Vaughan, W. Singhose, and N. Sadegh, "Use of Active Suspension Control to Counter the Effects of Vehicle Payloads," in *IEEE Conf. on Control Applications*, Istanbul, Turkey, 2003.
[320] W. Singhose, J. Huey, J. Lawrence, and D. Frakes, "Input Shaping Curriculum: Integrating Interactive Simulations And Experimental Setups," in *11th Mediterranean Conference on Control Automation*, Rhodes, Greece, 2003, pp. IV 11-05.
[321] W. Singhose, E. Biediger, H. Okada, and S. Matunaga, "Control of Flexible Satellites Using Analytic On-Off Thruster Commands," in *AIAA Guidance, Navigation, & Control Conf.*, Austin, TX, 2003: AIAA-2003-5333.
[322] K. Kozak, J. Huey, and W. Singhose, "Performance Measures for Input Shaping," in *IEEE Conf. on Control Applications*, Istanbul, Turkey, 2003.
[323] S. Klooster and W. Singhose, "A Study of Passenger Seat Parameters as a Basis for Active Seat Control," in *11th Mediterranean Conference on Control Automation*, Rhodes, Greece, 2003.
[324] J. Huey and W. Singhose, "Effect of Vertical Acceleration on the Frequency of a Pendulum: Impact on Input Shaping," in *IEEE Conference on Control Applications*, Istanbul, Turkey, 2003.
[325] J. Brogan, J. Fortgang, and W. Singhose, "Experimental Verification of Vibration Absorbers Combined with Input Shaping for Oscillatory Systems," in *American Control Conference*, Denver, CO, 2003.
[326] E. Biediger, W. Singhose, H. Okada, and S. Matunaga, "Trajectory Planning for Coordinating Satellites using Command Generation," in *10th International Space Conference of Pacific-basin Societies*, Tokyo, Japan, 2003.
[327] R. Thomas, J. Fortgang, and W. Singhose, "Optimization of Lightly Damped Pick-and-Place Processes Using Optimal Dynamic Vibration Absorbers," in *6th International Conference on Motion and Vibration Control*, Saitama, Japan, 2002.
[328] J. Smith, K. Kozak, and W. Singhose, "Input Shaping for a Simple Non-Linear System," in *American Control Conference*, Anchorage, AK, 2002, vol. 1, pp. 821-6.
[329] T. Singh and W. Singhose, "Tutorial on Input Shaping/Time Delay Control of Maneuvering Flexible Structures," in *American Control Conference*, Anchorage, AK, 2002.
[330] G. Peláez, W. Singhose, and A. Vizan, "Shaping Tool Head Pneumatic Actuator Commands to Reduce Cut Car Letters Machine Vibration," in *WSEAS Int. Conf. on Signal Processing, Robotics and Automation*, 2002, pp. 54-59.

NJOY Exhibit 2022.297
Juul v. NJOY
IPR2024-00161

[331] G. Peláez and W. Singhose, "Implementation of Input Shaping on Flexible Machines with Integer Controllers," in *IFAC World Congress on Automatic Control*, Barcelona, Spain, 2002, doi: 10.3182/20020721-6-ES-1901.01474.
[332] J. Lawrence and W. Singhose, "Decreasing Effects of Coulomb Friction in Precision Positioning Using Input Shaping: Experimental Verifications," in *Japan-USA Symp. on Flexible Automation*, Hiroshima, Japan, 2002.
[333] T. Kurfess, W. Singhose, and J. Fortgang, "Genesis and Evolution of an Undergraduate Mechatronics Course," in *Second IFAC Conf. of Mechatronic Systems*, Berkeley, CA, 2002.
[334] K. Kozak, I. Ebert-Uphoff, P. A. Voglewede, and W. Singhose, "Concept Paper: On the Significance of the Lowest Linearized Natural Frequency of a Parallel Manipulator as a Performance Measure for Concurrent Design," in *Workshop on Fundamental Issues and Future Research Directions for Parallel Mechanisms and Manipulators*, Quebec City, Quebec, Canada, 2002.
[335] J. Huey and W. Singhose, "The Application of Input Shaping to Wire-Driven Mechanisms," in *6th International Conference on Motion and Vibration Control*, Saitama, Japan, 2002.
[336] K. Hekman, J. Lawrence, and W. Singhose, "Input Shaping for a PD Position Controller Under Coulomb Friction," in *IFAC World Congress on Automatic Control*, Barcelona, Spain, 2002.
[337] J. Fortgang and W. Singhose, "Concurrent Design of Input Shaping and Vibration Absorbers," in *American Control Conference*, Anchorage, AK, 2002.
[338] R. Eloundou and W. Singhose, "Justification for Using Step-Function Reference Commands: Comparison to S-Curves," in *2nd IFAC Conference on Mechatronic Systems*, Berkeley, CA, 2002: Elsevier Ltd., Oxford, UK
[339] R. Eloundou and W. Singhose, "Saturation Compensating Input Shapers for Reducing Vibration," in *6th Int. Conference on Motion and Vibration Control*, Saitama, Japan, 2002, vol. 2: Japan Soc. Mechanical Eng., Tokyo, Japan, pp. 625-30.
[340] U. Andresen and W. Singhose, "A Simple Cam Design Procedure for Automatic Screw Machines with Flexible Dynamics," in *Japan-USA Symp. on Flexible Automation*, Hiroshima, Japan, 2002.
[341] M. Robertson and W. Singhose, "Multi-level Optimization Techniques for Designing Digital Shapers," in *American Control Conference*, Pittsburgh, PA, 2001.
[342] K. Kozak, I. Ebert-Uphoff, and W. Singhose, "Analysis of Varying Natural Frequencies and Damping Ratios of a Sample Parallel Manipulator Throughout its Workspace using Linearized Equations of Motion," in *ASME Design Engineering Technical Conferences*, Pittsburgh, PA, 2001.

NJOY Exhibit 2022.298
Juul v. NJOY
IPR2024-00161

[343] K. Hekman, J. Lawrence, and W. Singhose, "Use of Input Shaping to Decrease the Effects of Stiction," in *5th IFAC Symposium on Nonlinear Control Systems*, St. Petersburg, Russia, 2001.
[344] J. Fortgang and W. Singhose, "Design of Vibration Absorbers for Step Motions and Step Disturbances," in *ASME Int. DETC 18th Biennial Conf. on Mechanical Vibration and Noise*, Pittsburgh, PA, 2001.
[345] C. Forest, D. Frakes, and W. Singhose, "Input-Shaped Control of Gantry Cranes: Simulation and Curriculum Development," in *ASME DETC 18th Biennial Conf. on Mechanical Vibration and Noise*, Pittsburgh, PA, 2001: DETC2001/VIB-21522.
[346] M. Kenison and W. Singhose, "A Parameter-Based Method for Designing Input Shapers for Flexible Robotic Systems," in *Seventh Mechatronics Forum International Conference*, Atlanta, GA, 2000.
[347] D. Frakes, K. Grosser, J. Fortgang, and W. Singhose, "Simulating Motion of an Operator-Controlled Gantry Crane in a Cluttered Work Environment," in *IMECE Conference*, Orlando, Fl, 2000.
[348] W. Singhose and B. Mills, "Command Generation Using Specified-Negative-Amplitude Input Shapers," in *American Control Conference*, San Diego, CA, 1999, vol. 1: IEEE, Piscataway, NJ, pp. 61-65.
[349] W. Singhose and B. Mills, "Vibration Reduction with Specified-Swing Input Shapers," in *Conference on Control Applications*, Kohala, Hawaii, 1999, vol. 1: IEEE, Piscataway, NJ, pp. 533-538.
[350] W. Singhose and K. Grosser, "Limiting Excitation of Unmodeled High Modes with Negative Input Shapers," in *IEEE Conference on Controls Applications*, Kohala, Hawaii, 1999.
[351] M. Kenison and W. Singhose, "Input Shaper Design for Double-Pendulum Planar Gantry Cranes," in *IEEE Conference on Control Applications*, Kona, Hawaii, 1999, pp. 539-44.
[352] W. Singhose and S. Towell, "Double-Pendelum Gantry Crane Dynamics and Control," in *IEEE Conf. on Control Applications*, Trieste, Italy, 1998.
[353] R. Masterson, W. Singhose, and W. Seering, "Input Shaping for Constant-Velocity Scanning with Flexible Sensors," in *IEEE Conf. on Control Applications*, Trieste, Italy, 1998.
[354] W. E. Singhose, L. J. Porter, and W. P. Seering, "Input Shaped Control of a Planar Gantry Crane with Hoisting," in *American Control Conf.*, Albuquerque, NM, 1997.
[355] W. E. Singhose, B. W. Mills, and W. P. Seering, "Closed-Form Methods for On-Off Control of Multi-Mode Flexible Structures," in *IEEE Conf. of Decision and Control*, San Diego, CA, 1997, vol. 2: IEEE, New York, NY, pp. 1381-6.
[356] W. Singhose, T. Singh, and W. Seering, "On-Off Control of Flexible Spacecraft with Specified Fuel Usage," in *American Control Conf.*, Albuquerque, NM, 1997.

NJOY Exhibit 2022.299
Juul v. NJOY
IPR2024-00161

[357] W. Singhose and W. Seering, "Analytic Methods for Slewing Undamped Flexible Structures with On-Off Actuators," in *AIAA Guidance, Navigation, and Control Conf.*, New Orleans, LA, 1997.
[358] W. E. Singhose, W. P. Seering, and A. K. Banerjee, "Limiting Deflection During the Slewing of Flexible Spacecraft Using Deflection Sampling," in *AIAA Guidance, Navigation, and Control Conf.*, San Diego, CA, 1996.
[359] W. E. Singhose, L. Y. Pao, and W. P. Seering, "Time-Optimal Rest-to-Rest Slewing of Multi-Mode Flexible Spacecraft Using ZVD Robustness Constraints," in *AIAA Guidance, Navigation, and Control Conf.*, San Diego, CA, 1996.
[360] W. Singhose, W. Seering, and N. Singer, "Input Shaping for Vibration Reduction with Specified Insensitivity to Modeling Errors," in *Japan-USA Sym. on Flexible Automation*, Boston, MA, 1996, vol. 1: ASME, pp. 307-13.
[361] W. Singhose and L. Pao, "Comparison of Input Shaping Techniques for Speed-Critical Multi-Mode Flexible Systems," in *IEEE Conf. on Control Applications*, Dearborn, MI, 1996.
[362] L. Pao and W. Singhose, "Unity Magnitude Input Shapers and Their Relation to Time-Optimal Control," in *IFAC World Congress*, San Francisco, CA, 1996, pp. 385-390.
[363] E. A. Crain, W. E. Singhose, and W. P. Seering, "Derivation and Properties of Convolved and Simultaneous Two-Mode Input Shapers," in *IFAC World Congress*, San Francisco, CA, 1996, pp. 441-6.
[364] E. A. Crain, W. E. Singhose, and W. P. Seering, "Evaluation of Input Shaping on Configuration Dependent Systems," in *Japan-USA Symp. on Flexible Automation*, Boston, MA, 1996.
[365] W. Singhose, L. Porter, and N. Singer, "Vibration Reduction Using Multi-Hump Extra-Insensitive Input Shapers," in *American Control Conference*, Seattle, WA, 1995, vol. 5, pp. 3830-34.
[366] W. Singhose, K. Bohlke, and W. Seering, "Fuel-Efficient Shaped Command Profiles for Flexible Spacecraft," in *AIAA Guidance, Navigation, and Control Conf.*, Baltimore, MD, 1995.
[367] L. Y. Pao and W. E. Singhose, "On the Equivalence of Minimum Time Input Shaping with Traditional Time-Optimal Control," in *IEEE Conference on Control Applications*, Albany, NY, 1995, pp. 1120-5.
[368] L. Y. Pao and W. E. Singhose, "A Comparison of Constant and Variable Amplitude Command Shaping Techniques for Vibration Reduction," in *IEEE Conference on Control Applications*, Albany, NY, 1995, pp. 875-81.
[369] W. Singhose, N. Singer, and W. Seering, "Design and Implementation of Time-Optimal Negative Input Shapers," in *International Mechanical Engineering Congress and Exposition, DSC 55-1*, Chicago, IL, 1994: ASME, pp. 151-7.

NJOY Exhibit 2022.300
Juul v. NJOY
IPR2024-00161

[370] W. Singhose, S. Derezinski, and N. Singer, "Extra-Insensitive Shapers for Controlling Flexible Spacecraft," in *AIAA Guidance, Navigation, and Control Conf.*, Scottsdale, AZ, 1994.
[371] W. Singhose, S. Derezinski, and N. Singer, "Input Shapers for Improving the Throughput of Torque-Limited Systems," in *IEEE Conf. on Control Applications*, Glasgow, Scotland, 1994.
[372] W. E. Singhose, W. P. Seering, and N. C. Singer, "Shaping Inputs to Reduce Vibration: A Vector Diagram Approach," in *IEEE Int. Conference on Robotics and Automation*, Cincinnati, OH, 1990, vol. 2, pp. 922-927.

Invited papers

[373] W. Singhose, "Shaping Inputs to Reduce Vibration: A Vector Diagram Approach," MIT Artificial Intelligence Lab Memo No. 1223, March 1990. [Online]. Available: invited
[374] W. Singhose and W. Seering, "Generating Vibration-Reducing Inputs with Vector Diagrams," in *IFToMM Eighth World Congress on the Theory of Machines and Mechanisms*, Prague, Czechoslovakia, 1991, vol. 1, pp. 315-318. [Online]. Available: invited. [Online]. Available: invited
[375] A. K. Banerjee and W. E. Singhose, "Slewing and Vibration Control of a Nonlinearly Elastic Shuttle Antenna," in *AIAA/AAS Astrodynamics Specialists Conf.*, Scottsdale, AZ, 1994. [Online]. Available: invited. [Online]. Available: invited
[376] W. Singhose and N. Singer, "Initial Investigations into the Effects of Input Shaping on Trajectory Following," in *American Control Conference*, Baltimore, MD, 1994, vol. 3, pp. 2526-32. [Online]. Available: invited. [Online]. Available: invited
[377] W. E. Singhose and N. C. Singer, "Improving Coordinate Measuring Machine Repeatability with Input Shaping," in *NSF Design and Manufacturing Grantees Conf.*, Cambridge, MA, 1994, pp. 467-8. [Online]. Available: invited. [Online]. Available: invited
[378] A. K. Banerjee and W. E. Singhose, "Minimum Time Fuel Efficient Maneuver of Flexible Spacecraft with Vibration Amplitude Constraint," in *AAS Astrodynamics Specialist Conf.*, Halifax, Nova Scotia, 1995, vol. AAS 95-318. [Online]. Available: invited. [Online]. Available: invited
[379] W. Singhose and T. Chuang, "Reducing Deviations From Trajectory Components With Input Shaping," in *American Control Conference*, Seattle, WA, 1995, vol. 1, pp. 929-33. [Online]. Available: invited. [Online]. Available: invited
[380] W. Singhose, W. Seering, and N. Singer, "The Effect of Input Shaping on Coordinate Measuring Machine Repeatability," in *IFToMM Ninth World Congress on the Theory of Machines and Mechanisms*, Milan, Italy, 1995, vol. 4, pp. 2930-2934. [Online]. Available: invited. [Online]. Available: invited

NJOY Exhibit 2022.301
Juul v. NJOY
IPR2024-00161

[381] W. Singhose, N. Singer, and W. Seering, "Comparison of Command Shaping Methods For Reducing Residual Vibration," in *Third European Control Conf.*, Rome, Italy, 1995, vol. 2, pp. 1126-1131.
[382] N. Singer, L. Pao, W. Singhose, and W. Seering, "An Efficient Algorithm for the Generation of Multi-Mode Input Shaping Sequences," in *IEEE Int. Conf. on Control Applications*, Dearborn, MI, 1996. [Online]. Available: invited. [Online]. Available: invited
[383] W. E. Singhose, W. P. Seering, and A. Banerjee, "An Evaluation of Fuel-Efficient On-Off Input Shaping with Deflection Limiting," in *AIAA/AAS Astrodynamics Specialist Conf.*, San Diego, CA, 1996. [Online]. Available: invited. [Online]. Available: invited
[384] A. K. Banerjee and W. E. Singhose, "Command Shaping in Tracking Control of a Two-Link Flexible Manipulator," in *AIAA Astrodynamics Conf.*, Sun Valley, ID, 1997, vol. AAS 97-721. [Online]. Available: invited. [Online]. Available: invited
[385] H. J. S. Feder, W. E. Singhose, and W. P. Seering, "Input Shaping for Collision Avoidance with Robotic Manipulation of Suspended Payloads," in *11th Symposium on Structural Dynamics and Control*, Blacksburg, VA, 1997. [Online]. Available: invited. [Online]. Available: invited
[386] N. Singer, W. Singhose, and E. Kriikku, "An Input Shaping Controller Enabling Cranes to Move Without Sway," in *ANS 7th Topical Meeting on Robotics and Remote Systems*, Augusta, GA, 1997, vol. 1, pp. 225-231. [Online]. Available: invited. [Online]. Available: invited
[387] W. Singhose, I. Villanueva, and W. Seering, "Use of Neural Networks for Generation of On-Off Commands for Flexible Systems," in *12th IEEE Int. Symp. on Intelligent Control*, Istanbul, Turkey, 1997.
[388] B. W. Mills, W. E. Singhose, and W. P. Seering, "Closed-Form Generation of Specified-Fuel Commands for Flexible Systems," in *American Control Conference*, Philadelphia, PA, 1998, vol. 5: IEEE, Piscataway, NJ, pp. 2632-6.
[389] A. Banerjee and W. Singhose, "Vibration Reduction for Flexible Spacecraft Following Momentum Dumping with/without Slewing," in *AAS/AIAA Astrodynamics Specialist Conference*, Girdwood, AK, 1999. [Online]. Available: invited. [Online]. Available: invited
[390] L. French, W. Singhose, and W. Seering, "An Expert System for the Design of Input Shapers," in *IEEE Conference on Control Applications*, Kohala, Hawaii, 1999. [Online]. Available: invited. [Online]. Available: invited
[391] K. Grosser and W. Singhose, "Command Generation for Flexible Telerobotic Arms," in *International Symposium on Motion and Vibration Control in Mechatronics*, Tokyo, Japan, 1999. [Online]. Available: invited. [Online]. Available: invited
[392] E. Ooten and W. Singhose, "Time-Optimal Commands for Sequential Motions of Flexible Systems with Numerator Dynamics," in *International Symposium on*

NJOY Exhibit 2022.302
Juul v. NJOY
IPR2024-00161

Motion and Vibration Control in Mechatronics, Tokyo, Japan, 1999. [Online]. Available: invited. [Online]. Available: invited

[393] M. Robertson and W. Singhose, "Initial Guess Schemes for Generating Deflection-Limiting Commands," in *AAS/AIAA Astrodynamics Specialist Conference*, Girdwood, AK, 1999. [Online]. Available: invited. [Online]. Available: invited

[394] K. Grosser, J. Fortgang, and W. Singhose, "Limiting High Mode Vibration and Rise Time in Flexible Telerobotic Arms," in *Conf. on Systemics, Cybernetics, and Informatics*, Orlando, FL, 2000.

[395] M. Kenison and W. Singhose, "Concurrent Design of Input Shaping and Feedback Control for Insensitivity to Parameter Variations," in *Sixth Int. Workshop on Advanced Motion Control*, Nagoya, Japan, 2000.

[396] E. Ooten and W. Singhose, "Command Generation with Sliding Mode Control for Flexible Systems," in *Sixth International Workshop on Advanced Motion Control*, Nagoya, Japan, 2000. [Online]. Available: invited. [Online]. Available: invited

[397] D. Frakes and W. Singhose, "Geometrically Constrained Optical-flow Based Tracking for the Extraction of Kinematic Data from Video," in *Fifth Int. Symp. on Computer Methods in Biomechanics and Biomedical Engineering*, Rome, Italy, 2001.

[398] E. Ooten-Biediger and W. Singhose, "Command Generation for Trajectory Planning of Coordinating Satellites," in *University Space Systems Symposium*, Honolulu, HI, 2002.

[399] M. Robertson and W. Singhose, "Deflection-Limiting Control of Flexible Spacecraft Using On-Off Thrusters," in *University Space Systems Symposium*, Honolulu, HI, 2002.

[400] E. Biediger and W. Singhose, "Formation Flying Satellite Control Utilizing Input Shaping," in *AIAA/AAS Astrodynamics Specialist Conf.*, Big Sky, Montana, 2003.

[401] E. Biediger, W. Singhose, D. Frakes, M. Kashiwa, and S. Matunaga, "An Investigation of Video Tracking on a Formation Flying Satellite Testbed," in *AIAA/AAS Astrodynamics Specialist Conf.*, Big Sky, Montana, 2003.

[402] W. Singhose, M. Robertson, T. Watanabe, H. Kojima, and A. Banerjee, "Tether-Based Actuators for Space Applications," in *2003 International Workshop on Advanced Sensors, Structural Health Monitoring, and Smart Structures*, Yokohama, Japan, 2003.

[403] T. Watanabe, T. Makida, H. A. Fujii, H. Kojima, and W. Singhose, "An Application of Input Shaping for Electrodynamic Tether System," in *AIAA/AAS Astrodynamics Specialist Conference*, Providence, Rhode Island, 2004.

[404] A. Banerjee, W. Singhose, and D. Blackburn, "Orbit Boosting of an Electrodynamic Tethered Satellite with Input-Shaped Current," in *AAS/AIAA Astrodynamics Specialist Conference*, Lake Tahoe, CA, 2005.

NJOY Exhibit 2022.303
Juul v. NJOY
IPR2024-00161

[405] W. Singhose and D. Kim, "Robustness of Command-Shaping Control on Flexible Systems," in *Spring Research Conference on Statistics in Industry and Technology*, Chicago, IL, 2011.

D. Presentations

Keynote and Plenary Lectures

6/8/23 "Hazard Analysis of Mobile Juvenile Products," International Forum on Automotive and Mechanical Engineering (MECHFORUM2023)
9/23/15 "Dynamics and Control of Crane Payload Lift-off and Lay-Down Operations," XXI Triennial Int. Conference on Material Handling, Constructions, and Logistics, Vienna, Austria
10/27/14 "Using Mechatronics to Improve Human Operation of Complex Dynamic Systems," International Conference on Mechanics and Control Engineering, Asheville, NC
10/18/12 "Improving Human Operation of Oscillatory Dynamic Systems," International Conference on Control, Automation and Systems, Jeju, South Korea
10/19/06 "Crane Oscillation Control: Applications and Educational Uses," International Conference on Material Handling, Constructions, and Logistics, Belgrade, Serbia

Other Invited Lectures

3/2/20 "Legal Considerations of Sensor use in Emerging Technology," Google, Mountain View, CA
4/24/19 "Ethical Considerations of Sensor Use," Stanford University, Palo Alto, CA
11/29/18 "Killer Robots: Why You Will not be Owning a Self-Driving Car," Stanford University, CA
10/12/18 "Georgia Tech ARLISS Team", University of Oregon, Eugene, OR
2/26/18 "Command Generation for Flexible Systems," University of California, Berkeley, Berkeley, CA
10/3/16 "Oscillation Control Using Input Shaping Technology," Hankyong University, Anseong, South Korea
9/29/16 "Input Shaping Control Technologies", Shanghai Jiao Tong University, Shanghai, China
4/21/16 "Improving Manufacturing Machines with Command Shaping," Mercedes Manufacturing Facilities, Vance, AL
1/25/16 "Commercialization of University-Developed Technology," University of Chicago Booth School of Business, Chicago, IL
9/25/15 "Applications of Input Shaping Control Methods," Czech Technical University, Prague, Czech Republic
3/25/15 "Oscillation Control of Suspended Loads Using Command Shaping," Boeing BR&T – Vertical Lift, Mesa, AZ

NJOY Exhibit 2022.304
Juul v. NJOY
IPR2024-00161

1/22/15 “Building a Culture of Active Learning in Mechatronics,” Kumoh National Institute of Technology, Gumi, South Korea
1/19-1/23/15 “Special Lectures on Mechatronics by Foreign Distinguished Professor,” Kumoh National Institute of Technology, Gumi, South Korea
9/26/14 “Building a Culture of Active Learning”, Georgia Tech Zeigler Lecture
8/4/14 “NI myRIO Design Real Systems, Fast: 2014 Student Project Success”, Panelist, NI Week, Austin, TX
3/19/14 “Input Shaping for Oscillation Reduction in the Digital World”, Auburn University
11/16/13 “Improving Machine Motion with Command Shaping”, Wuxi Zhong Ding Logistics, Wuxi, China
11/14/13 “Improving Manufacturing Machines with Command Shaping”, HUST-Wuxi Research Institute, Wuxi, China
11/13/13 “Analyzing Accident Videos of Inverted-Pendulum Human Transporters”, Huazhong University of Science and Technology, Wuhan, China
4/15/13 “Control of Large Flexible Spacecraft, Robots, and Cranes”, Budapest University of Technology and Economics, Budapest, Hungary
4/15/13 “Recue Robot: An International Student Design Collaboration”, University of Patras, Patras, Greece
10/17/12 “Active Learning Methods for Mechanical Engineering”, Yeungnam College, Daegu, South Korea
6/26/12 “Command-Shaping Control of Flexible Aerospace Systems”, Beijing Institute of Technology Beijing, China
6/18-21/12 “Introductory Creative Decision and Design Tools for Mechatronics”, Huazhong University of Science and Technology, Wuhan, China
11/8/11 “Advanced Crane Control to Improve Safety and Ergonomics”, Boeing Research and Technology Ergonomics Road Show, Everett, WA
5/6/11 “Creative Decisions and Design: An Innovative Design Course at Georgia Tech”, Aalto University, Helsinki, Finland
4/25/11 “Creative Decisions and Design: An Innovative Design Course at Georgia Tech”, Chosun University, Gwangju, Korea
4/21/11 “Controlling Large Flexible Structures with Command Shaping”, Konkuk Univertsity, Seoul, Korea
4/19/11 “Command Shaping Control of Large Flexible Structures”, Shanghai Maritime University, Shanghai, China
4/18/11 “Creative Decisions and Design: An Innovative Design Course at Georgia Tech”, Huazhong University of Science and Technology, Wuhan, China
4/18/11 “Controlling Large Flexible Structures with Command Shaping”, Huazhong University of Science and Technology, Wuhan, China
4/1/11 “Command Shaping Control of Large Flexible Systems”, University of Parma, Parma, Italy

NJOY Exhibit 2022.305
Juul v. NJOY
IPR2024-00161

7/12/10 “Command Shaping Control of Large Flexible Systems”, University Carlos III, Madrid, Spain
6/18/10 “Advanced Crane Control Lab at Georgia Tech”, KoneCranes, Hyvinkää, Finland
5/3/10 “Command Shaping Control of Flexible Systems”, University Castilla-La Mancha, Ciudad Real, Spain
12/16/09 “Control of Cranes and Spacecraft using Command Shaping”, University of Sydney, Sydney, Australia

11/25/09 “The ASU Experience: Interfacing with the Machines“, Arizona State University, Tempe, AZ

11/25/09 “Interfaces and Control Systems for Intuitive Crane Control”, Arizona State University, Tempe, AZ

10/6/09 “Using Competitions in Mechatronics Engineering Education at Georgia Tech”, Chosun University, Kwangju, Korea

4/20/09 “Advanced Command Shaping Control of Cranes, Robots, and Spacecraft”, Instituto Automatique de Industriales, Madrid, Spain

11/25/08 “Command Shaping Control of Cranes, Robots, and Spacecraft”, Kyung Hee University, Suwon, Korea.

11/24/08 “Command Shaping Control of Cranes, Robots, and Spacecraft”, Seoul National University, Seoul, Korea.

11/21/08 “Command Shaping Control of Cranes, Robots, and Spacecraft”, Korean Atomic Energy Research Institute, Deajon, Korea.

11/20/08 “Control of Tip-Over Instability”, Kumoh National Institute of Technology, Gumi, Korea.

8/10/08 “Engineering Teaching Methods at Georgia Tech”, Shandong Jianzhu University, Jinan, China.

8/10/08 “Using Command Shaping to Control Robots, Spacecraft, and Cranes”, Shandong Jianzhu University, Jinan, China.

8/8/08 “Control of Robots, Spacecraft, and Cranes Using Command Shaping”, Northeastern Forest University, Harbin, China.

8/7/08 “Engineering Teaching Methods at Georgia Tech”, Northeastern Forest University, Harbin, China.

8/4/08-8/8/08 “Command Shaping for Dynamic Systems”, Harbin Institute of Technology, Harbin, China.
5/28/07, “A Design Course at Georgia Tech: Creative Decisions & Design”, Center of Excellence in Robotics, Kumoh National Institute of Technology, Gumi, Korea.

NJOY Exhibit 2022.306
Juul v. NJOY
IPR2024-00161

5/24/07, “Making Robots and Cranes Move Very Fast with Command Shaping”, Northwest Forest University, Harbin, China.
5/23/07, “Making Robots and Cranes Move Very Fast with Command Shaping”, Harbin Institute of Technology, Harbin, China.
3/19/07, “Crane Dynamics and Control: Applications and Educational Uses”, Center of Excellence in Robotics, Tokyo Tech, Tokyo, Japan.
9/1/2006, “Crane Oscillation Control by Command Shaping”, Ishikawajima Harima Heavy Industries, Yokohama, Japan.
4/20/06, “High-Speed Motion Control Using Command Shaping”, Toshiba Corporate Research & Development Center, Tokyo, Japan.
1/25/2006, “”Command Shaping for Cranes and Other Flexible Systems”, University of Tokyo, Tokyo, Japan.
1/18/06, “Research Topics for Gantry Robots”, Kumoh National Institute of Technology, Gumi, South Korea.
12/13/05, “An Introduction to Command Shaping for Flexible Systems”, Center of Excellence in Robotics, Tokyo Tech, Tokyo, Japan.
8/12/05, “Advanced Command Shaping for Nonlinear Systems and On-Off Actuators”, Kumoh National Institute of Technology, Gumi, South Korea.
8/11/05, “An Introduction to Command Shaping for Flexible Systems”, Kumoh National Institute of Technology, Gumi, South Korea.
8/10/05, “An Introduction to Command Shaping for Flexible Systems”, Korea Institute of Machinery & Materials, Deajon, South Korea.
8/9/05, “Command Shaping for Flexible Systems”, Pusan National University, Busan, South Korea.
11/29/04, “Improving Machine Speed and Accuracy by Command Shaping”, Metz, France.
10/27/04 – “Improving the Speed of Cranes, Robots, and Micro Mills by Command Shaping”, Instituto Automatique de Industriales, Madrid, Spain
4/15/04 – “Undergraduate Research in Mechanical Engineering”, Meeting of Congressional Staffers, Georgia Tech Conference Center, Atlanta, GA.
3/10/04 – “Design of Physical Mechanisms to Reduce Unwanted Dynamics”, Nihon University, Tokyo, Japan.
1/29/04 – "Georgia Tech CanSat Team", Southeastern Space Grant Consortia Director’s Meeting, Atlanta, GA.
10/23/03 - "Control of Flexible Spacecraft Using Command Shaping ", Georgia Tech IEEE meeting Atlanta, GA.
8/7/02 - "Rapid Motion of Crane-Like Structures", Tsukuba University, Tsukuba, Japan.
10/15/02 - "Designing Commands to Reduce Vibration in Mechanical Systems", ETSII de Madrid, Madrid, Spain.
10/14/02 - "Designing Commands to Reduce Vibration in Mechanical Systems", University of Vigo, Vigo, Spain.

NJOY Exhibit 2022.307
Juul v. NJOY
IPR2024-00161

8/13/02 - "Command Shaping for Flexible Structures", Tokyo Metropolitan Institute of Technology, Tokyo, Japan.
7/29/02 - "Controlling Flexible Spacecraft through Command Shaping", ISAS Astrodynamics Symposium Invited Speaker, Sagamihara, Japan.
7/13/02- "Using Input Shaping with On/Off Actuators", Laboratory for Space Systems, Tokyo Institute of Technology, Tokyo, Japan.
7/6/02- "Tutorial on Input Shaping for Moving Flexible Structures", Laboratory for Space Systems, Tokyo Institute of Technology, Tokyo, Japan.
3/18/02 - "Command Shaping Overview and Application to Hard Disk Drive Servo Control", Hitachi Corporation, Odawara, Japan.
3/15/02 - "Command Shaping for Vibration Reduction: Overview and Application to Hard Disk Drive Servo Control", IEE Committee Meeting for Mass Storage Servo, Nagoya, Japan.
10/27/00 - "Robotics Research at Georgia Tech." Waseda University, Tokyo, Japan.
10/24/00 - "Robotics Research at Georgia Tech." Tokyo Institute of Technology, Tokyo, Japan.
10/23/00 - "Robotics Research at Georgia Tech." Kyushu University, Fukuoka, Japan.
10/16/00 - "How to Properly Motivate Robots." MIT Club of Atlanta, Georgia Tech.
2/27/99 - "Making Machines Move Very Fast With Command Generation." American University in Cairo, Cairo, Egypt.

E. Grants and Contracts
A. As PI or Co-PI

Private Sources

"Crane Safety Research Center", Wang-Wong Foundation, December, 2023, $5,000,000.

Government Sources

"Input Shaping Mobile Crane Controllers", Georgia Research Alliance, October 2018, $49,965.

"I-Corps: Reducing Oscillation of Systems Driven by Stepper Motors and On-Off Actuators", National Science Foundation, April 2016, $50,000.

"Rocket Rescue Robot", Georgia Space Grant Consortium, August 2014, $6,000.

"Designing a Rocket-Launched Target-Seeking Rescue Robot", Georgia Space Grant Consortium, May 2013, $3,762.

"Hopping Rotochute Micro Satellite Design Project", Georgia Space Grant Consortium, July 2012, $2,275.

NJOY Exhibit 2022.308
Juul v. NJOY
IPR2024-00161

“International DDEP: Control of Complex Tower Crane Motion Using Low-Cost Cameras”, National Science Foundation, September 2011-December 2012, $13,930.

"Input Shaping for Rotorcraft Sling Load Operation", National Rotorcraft Technology Center (NRTC), Jan. 2011 – May 2013, $120,000. **Co-PI (Singhose: $56,875)**

"Georgia Tech Student CanSat Team", Georgia Space Grant Consortium, Jan. 2006 - May 2010, $19,708.

“International DDEP: Development of Aircraft Conflict Resolution Algorithms”, National Science Foundation, May 2008-September 2008, $9,950.

“Approaches to Traffic Flow Management in the Presence of Uncertainty”, NASA, October 2006-September 2008, $706,366. **Co-PI (Singhose: $120,056)**

“International DDEP: Experimental Evaluation of a Mobile Tower Crane”, National Science Foundation, November 2006-March 2007, $10,800.

“International DDEP: Experimental and Educational Research with Remotely Operated Cranes”, National Science Foundation, December 2005-March 2006, $8,100.

“Planning Visit: Large Flexible Space Structures”, National Science Foundation, December 2005, $12,412.

"Application of Command Generation Techniques to the Control of Space Tether Systems", NASA/Marshall Space Flight Center, July 2005-July 2006, $24,000.

“Ph.D. Dissertation Enhancement Project: Experimental Evaluation of Low-Contact-Force Machining”, National Science Foundation, January 2004-May 2004, $9,700.

Support for International Workshop on Advanced Sensors, Structural Health Monitoring, and Smart Structures, Yokohama, Japan, National Science Foundation, November 2003, $1,334.

"Command Generation and Control of Momentum Exchange Electrodynamic Reboost Tethered Satellite", NASA/Marshall Space Flight Center, August 2003-July2005, $48,000.

"Georgia Tech CanSat Development", Georgia Space Grant Consortium, December 2002 - December 2005, $20,851.

"Experimental Evaluation of Coordinated Flexible Satellite Control", National Science Foundation, November 2002, $7,995.

NJOY Exhibit 2022.309
Juul v. NJOY
IPR2024-00161

"Trajectory Planning for Coordinating Satellites Using Command Generation", NASA/ Goddard Space Flight Center, August 2002-July 2005, $72,000.

Industry Sources

"Evolution of Novel Haptic Actuation, Implementation and Test Systems" Google Inc., Jan. 2022, $249,869.

"Steady Hoist Swing-Damping Control for Rotocraft Operations," Atlas Devices Inc., March, 2021, $100,000.

"Development of Advanced Haptic Actuation Structures and Control Methods," Google Inc., Jan. 2021, $246,042.

"Development of Novel Haptic Actuation," Google Inc., Jan. 2020, $258,488.

"Dynamic Model and Control System Design for Cable-Driven Crane," ConcertLab, Jan. 2020, $27,088.

"Steady Hoist for Rotocraft Operations," Atlas Devices, LLC, Dec. 2019, $10,000.

"Mobile Vision GT Singhose SOW 5", Google Inc., Nov, 2017, $105,650.

"Mobile Vision GT Singhose SOW 4", Google Inc., Jan, 2017, $95,922.

"Development Kits and myRIO Controllers for Undergraduate Controls", National Instruments, October 2016, $8,814.

"Mobile Vision GT Singhose SOW 3", Google Inc., August, 2016, $80,193.

"Mobile Vision GT Singhose SOW 2", Google, Inc. Jan, 2016, $112,309.

"Automated Large-Area Sanding", Boeing Research and Technology, Jan, 2016, $50,000.

"Mobile Vision - Design and Evaluation of a Mobile Vision-Based Device for Interactive Writing", Google Inc., June, 2015, $79,794.

"Automated Large-Area Painting", Boeing Research and Technology, May, 2015, $50,000.

"Hardware Integration for Large-Area Sensing", Boeing Research and Technology, July, 2014, $141,632.

"ME6404 Pneumatics project", National Fluid Power Association, November 2014, $4,520.

"PLC Programming Curriculum for Georgia Tech", Siemens, August 2014, $27,500.

"Use of Pneumatic Systems in Introductory Mechanical Design Projects", National Fluid Power Association, November 2013, $4,720.

NJOY Exhibit 2022.310
Juul v. NJOY
IPR2024-00161

"Development of Mechatronics and Robotics Educational Platforms Using Compact Control Units", National Instruments, May 2013, $117,000.

"Integration of Zurich University of Applied Sciences Bridge Crane into Georgia Tech Research and Educational Activities", Siemens, May 2013, $15,920.

"Manufacturing Technologies for the 21st Century", Boeing Research and Technology, Jan. 2013, $185,700.

"Multi-National Collaborative Design of Target-Seeking Robots", Boeing Research and Technology, Nov. 2012, $60,864.

"Multi-National Collaborative Design Tools", Boeing Research and Technology, Nov. 2012, $62,711.

"Input Shaping Analysis and Design Support", Space Systems Loral, August 2012, $47,086.

"Material Handling Dynamic Load Oscillation Suppression", Boeing Research and Technology, Jan. 2012, $100,000.

"Material Handling Dynamic Load Oscillation Suppression", Boeing Research and Technology, Jan. 2011, $100,000.

"A Balloon Hoist Experimental Setup to Evaluate National Instruments Products", National Instruments, March 2011, $38,665.

"Design & Development of a Pediatric Personal Transporter for Children with Disabilities", International Diversified Products, December 2010, $5,500. **Co-PI (Singhose: $2,750)**

"Siemens Automation – Cherrypicker Crane Project", Siemens Industry, August 2010, $44,732.

"Investigation of Commercial Personal Transporters", International Diversified Products, June 2010, $6,000. **Co-PI (Singhose: $3,000)**

"Material Handling Dynamic Load Oscillation Suppression", Boeing Research and Technology, Jan. 2010, $100,000.

"Sponsorship of Georgia Tech Curriculum Improvements", British Petroleum, Nov. 2009, $7,500.

"Development of a Cherrypicker Aerial Lift for Use in Local and Remote Laboratories", Siemens Energy and Automation, Sept. 2009, $38,000.

"**Pneumatic Powered Advertisement Dispenser",** Diastone Corporation, May 2009, $8,800.

"Material Handling Dynamic Load Oscillation Suppression", Boeing Research and Technology, Jan. 2009, $100,000.

NJOY Exhibit 2022.311
Juul v. NJOY
IPR2024-00161

"Integrating Pneumatics Into Introductory Mechanical Design", National Fluid Power Association, May 2008, $4,960.

"Material Handling Dynamic Load Oscillation Suppression", Boeing Research and Technology, Jan. 2008, $75,000.

"Expansion of Pneumatic Systems in ME2110: Creative Decisions and Design", National Fluid Power Association, March 2006, $4,000.

"Pneumatic Equipment and Supplies for ME2110: Creative Decisions and Design", Festo Corporation, March. 2005, $6,898.

"Introduction of Pneumatic Systems into ME2110: Creative Decisions and Design", National Fluid Power Association, Nov. 2004, $5,000.

"Feedback and Command Shaping Control of Bridge Cranes", CAMotion, Inc. Jan. 2004 - August 2008, $98,168.

"Prototype Controller for Elastic Spacecraft", Northrop Grumman, January 2004 – December 2004, $44,415.

Support for University Space System Symposium, Jet Propulsion Laboratory, November 2002-5, $5,528.

"Control of Sloshing Liquid Demonstration Unit", National Instruments, March 2001, $1,500.

International Sources

"International Design and Construction of Quadrotors", Kumoh National Institute of Technology, December 2015, $6,000.

"International Cooperative Education in Engineering Design", Chosun University, November 2013, $9,000.

"Development of Educational Tasks in an Introductory Design Course", Chosun University, November 2011, $9,600.

"Development of a Mobile Mechatronic Device", Chosun University, June 2011, $9,600.

"Development of Educational Tasks in an Introductory Design Course", Chosun University, November 2010, $2,400.

"Research on Mobile Mechatronics Machine", Chosun University, November 2010, $3,600.

"Mechanical Manipulators Control, Education and Research", Ministerio de Ciencia e Innovacion de España, Dec. 2009, 18,000 Euro ($25,767).

NJOY Exhibit 2022.312
Juul v. NJOY
IPR2024-00161

“Environmentally-Friendly Automotive Parts - Human Resources Development Center”, Chosun University, Dec. 2009, $6,000.

“Versatile Command Shaping Controllers for Industrial Cranes”, Kumoh National Institute of Technology, June 2006, $50,829

"Development of Vibration Reduction Scheme for XY Stages Using Input Shaping", Top Engineering Co., Center for Nano and Precision Technology, Kumi, Korea, December 2005, $5,000.

"Command Generation for Flexible Systems", Kumoh National Institute of Technology and Pusan National University, August 2005, 3300000 Won ($3,210).

"Enhanced Trajectory Tracking of Flexible Systems Using Command Generation", Japan Ministry of Education, Culture, Sports, Science and Technology (MEXT), and Tokyo Metropolitan Institute of Technology (TMIT), $11,500 **Co-PI (Singhose: $5,750)**.

"Generación De Órdenes De Movimiento Que No Inducen Vibración En Maquinas Con FaltaDe Rigidez", University of Vigo, October 2002, 900 Euros.

"Experimental Investigation of Deflection-Limiting Satellite Thruster Control for Multiple Flexible Satellites", Japan Society for the Promotion of Science, June 2002, $17,245.

Internal Sources

“**An International Collaborative Student Space Robot Design Initiative**”, Denning Global Engagement Seed Fund, 2014, $15,000.

GTRC travel grant to Serbia, July, 2014, $1,458.

“Interactive Tablet Computers for Introductory Mechanical Design”, Georgia Tech Technology Fee Grant, 2013, $22,896.

“Power Analyzer for Energy-Efficient Student Design Projects”, Georgia Tech Technology Fee Grant, 2013, $17,104.

GTRC travel grant to Turkey, July, 2013, $1,500.

GTRC travel grant to Lithuania, July, 2012, $750.

“Siemens Cherrypicker and Conference Paper Support” Manufacturing Research Center**,** July 2010, $6,750.

GTRC travel grant to Egypt, July, 2010, $750.

“Siemens Conference Paper Support” Manufacturing Research Center**,** September 2009, $3,200.

GTRC travel grant to Spain, April, 2009, $1,500.

NJOY Exhibit 2022.313
Juul v. NJOY
IPR2024-00161

"The Influence of Input Shaper Duration on Bridge Crane Operator Performance " Aayush Daftari, President's Undergraduate Research Travel Award, August 2008, $1,000.

"Dynamics of Orbit Boosting of an Electrodynamic Tethered Satellite with Input-Shaped Current" Adrit Lath, President's Undergraduate Research Award, July 2008, $1,500.

"Robustness of Negative Input Shaping" Aika Yano, President's Undergraduate Research Travel Award, May 2008, $1,000.

"Generator for Mobile Boom Crane", Materials, Supplies, & Travel Grants for Undergraduate Research, April. 2008, $1,500.

GTRC travel grant to Turkey, April, 2008, $1,500.

"Comparison of Command Filtering Methods for Vibration Reduction in Mechanical Systems", Anderson Smith, President's Undergraduate Research Awards, March. 2008, $1,500.

"Development of Input Shapers for Mobile Cranes", Adrit Lath, President's Undergraduate Research Awards, Nov. 2007, $1,500.

"Effect of Input Shaper Duration on Crane Operator Performance", Aaayush Daftari, President's Undergraduate Research Awards, Nov. 2007, $1,500.

"Robust Input Shaper Evaluation", Aika Yano, President's Undergraduate Research Awards, May 2007, $1,500.

GTRC travel grant to China, May, 2007, $1,500.

"Conference Travel Funding: Reduction of Double Pendulum Crane Oscillations", Dooroo Kim, President's Undergraduate Research Awards, August 2006, $1,000.

GTRC travel grant to Serbia, October, 2006, $1,278.

"Reduction of Double Pendulum Crane Oscillations", Dooroo Kim, President's Undergraduate Research Awards, December 2005, $1,500.

"Development and Testing of a Command Shaping Compensator for Nonlinear Drives", Jon Danielson, President's Undergraduate Research Awards, December, 2005, $1,000.

"Space Tethered Satellite Control", Andrew Timm, President's Undergraduate Research Awards, May, 2005, $1,500.

GTRC travel grant to IFAC (Czech Republic) & REM (France), June, 2005, $1,500.

"Use of Fluid Power to Cancel Low Frequency Vibrations", Varun Sharma,

NJOY Exhibit 2022.314
Juul v. NJOY
IPR2024-00161

President's Undergraduate Research Awards, Jan. 2005, $1,500.

"The Effects of Input Shaping on a Flexible Nonlinear Robotic Arm with Backlash", Matthew Falkenberg, President's Undergraduate Research Awards, Jan. 2005, $1,500.

"Study of Operator Behavior and Performance Using an Input-Shaped Bridge Crane", Attir Khalid, President's Undergraduate Research Awards, April 2004, $1,000.

"Fluid Power Control of a Hyper-Active Seat for Low-Frequency Vibration Suppression", Earl Lewis, President's Undergraduate Research Awards, December 2003, $960.

GTRC travel grant to IEEE CCA (Turkey) & IEEE MED (Greece), June, 2003, $1,500.

"Vibration Reduction for High-Rise Elevators", **Vlad Patrangenaru,** President's Undergraduate Research Awards, April 2003, $800.

"Experimental Verification of Input Shaping Combined with Vibration Absorbers for Oscillatory Systems", President's Undergraduate Research Awards, April 2003, $900.

"Experimental Investigation of Input Shaping with Friction on a Solder Cell Machine", President's Undergraduate Research Awards, December 2002, $900.

"CanSat Project", President's Undergraduate Research Awards, December 2002, $500.

Georgia Tech Foundation Travel Grant to Spain, October 2002, $764.

GTRC travel grant to NCOLS 2001 (Russia), April 2001, $1,406.

"Experimental Apparatus for Input-Shaped Cam Profiles", President's Undergraduate Research Awards, July 2001, $1,250.

GTRC travel grant for Japan lecture tour, October 2000, $1,231.

GTRC travel grant to Advanced Motion Control 2000, February 2000, $1,250.

Other Sources

SURE & SHARP student support (Marie Cox, April Pritchard, Nathan Mauch, Adam Vela, Dwayne Bobb, **Timothy Melano**, **Rory Thomas**, **Kimberly Sheafe**) May 1999 – August 2004, $4,000.

NJOY Exhibit 2022.315
Juul v. NJOY
IPR2024-00161

B. As Investigator

RERC on Wheeled Mobility in Everyday Life. PI Dr. Stephen Sprigle. Funding for salary, graduate student support, materials and supplies. November 2003 - October 2008. $134,725. Total project budget $4,750,000.

In-Line Optical Measurement of MicroElectroMechanical Systems (MEMS) Devices During Production. PI Dr. Thomas Kurfess. Funding provided to train high school teacher for mechatronics curriculum transfer from Georgia Tech to Cedar Grove High School. June 2003-August 2003. $6,000.

MARC Siemens - Automation and Drives. PI Dr. Steven Danyluk. Funding provided for graduate and undergraduate student support, hardware development, installation of oscillation controller on the MARC crane and development of portable bridge and tower cranes. August 2002 – August 2012, $889,429.

HUSCO/Ramirez Laboratories for Fluid Power and Motion Control. PI Dr. Wayne Book. Funding for graduate student support, hardware development, and travel. August 2002-July 2004. $42,775.

F. Other Scholarly and Creative Accomplishments

Patents

[1] W. Singhose, N. Singer, W. Rappole, S. Derezinski, and K. Pasch, "Methods and Apparatus for Minimizing Unwanted Dynamics in a Physical System," US Patent US 5,638,267, June 10, 1997, 1997.

[2] R. Eloundou and W. Singhose, "Command Generation Combining Input Shaping and Smooth Baseline Commands," Patent US 6,920,378, July 19, 2005, 2005.

[3] K. L. Sorensen, W. Singhose, and S. Dickerson, "Combined feedback and command shaping controller for multistate control with application to improving positioning and reducing cable sway in cranes " Patent US 7,970,521, June 28, 2011, 2011.

[4] W. Singhose and D. Kim, "Methods and Systems for Double-Pendulum Crane Control," Patent US 8,235,229, August 7, 2012, 2012.

[5] W. Singhose and K. Peng, "Crane Control Systems and Method," US Patent US9,132,997 Patent Appl. 13/642,075, Sept. 15, 2015.

[6] W. Singhose and J. Vaughan, "Methods and Systems for Improving Positioning Accuracy," US Patent US 8,975,853 B2 Patent Appl. 2011/0298409 A1, 2015.

[7] K. L. Sorensen, W. Singhose, and S. Dickerson, "Crane Motion Control," Patent US 9,776,838, October 3, 2017, 2017.

G. Other Professional

Conferences Organized

NSF Planning Visit: Large Flexible Space Structures, Tokyo Japan, 12/11-12/15/2005.

NJOY Exhibit 2022.316
Juul v. NJOY
IPR2024-00161

Siemens Automation and Drives Conference at Georgia Tech Lorraine, 11/29-11/30/04.

Conference Sessions Organized
"Command Shaping in Mechatronics." 7th Mechatronics Forum International Conference, 2000, Atlanta, GA.
"Tutorial: Input Shaping and Time Delay Control of Maneuvering Flexible Structures." 2002 American Controls Conference, Anchorage, AK.

Conference Sessions Chaired
2007 American Control Conference, New York, NY
2006 ICAMEM, Tunis, Tunisia
2004 Japan-USA Symposium on Flexible Automation, Denver, CO.
2004 American Control Conference, Boston, MA.
2003 American Control Conference, Denver, CO.
2002 2nd IFAC Conference on Mechatronic Systems, Berkeley, CA.
2002 6th International Conference on Motion and Vibration Control, Saitama, Japan
2002 Japan-USA Symposium on Flexible Automation, Hiroshima, Japan.
2002 American Control Conference, Anchorage, AK.
1999 IEEE Conference on Control Applications, Kona, HA.
1998 IEEE Conference on Control Applications, Trieste, Italy.
1995 IFToMM Ninth World Congress on the Theory of Machines and Mechanisms, Milan, Italy.

V. Education

B. Individual Student Guidance

B1. Ph.D. Students

B1.a. Graduated Ph.D. Students

1) Kris Kozak. Started Fall '99. Passed qualifier examination Fall '00. Ph.D. awarded May '03, "Investigation of Input Shaping for Parallel Manipulators." Currently at Southwestern Research Institute. (coadvised with Dr. Ebert-Uphoff).
2) Erika Biediger-Ooten. Started Fall '98. M.S. Dec. '00. Passed qualifier examination Fall '01. Ph.D. awarded May '05, "Vibration Reduction Using Command Generation in Formation Flying Satellites." Currently Engineer at Exxon-Mobil.
3) Mike Robertson. Started Fall '98. M.S. May '01. Passed qualifier examination Spring '02. Ph.D. awarded May '05, "Command Generation for Tethered Satellite Systems". Currently Professor at the Naval Academy
4) Joel Fortgang. Started Fall '99. M.S. May '02. Passed qualifier examination Spring '02. Ph.D. awarded May '06. "Combined Mechanical and Command Design for Micro-Milling Machines".

NJOY Exhibit 2022.317
Juul v. NJOY
IPR2024-00161

5) John Huey. Started Fall ’01. M.S. August '03. Passed qualifier examination Fall '03. Ph.D. awarded August ’06. “Concurrent Design of Feedback and Command Shaping Control”. Currently Controls Engineer - GE Aviation.
6) Jason Lawrence. Started Fall '00. M.S. August '02. Passed qualifier examination Fall '03. Ph.D. awarded August ’06. “Control of Tower Cranes”, Currently Mechanical Engineer at Lexmark.
7) Joshua Vaughan. Started Fall ’02. M.S. May ’04, Ph.D. awarded August ’08” Dynamics and Control of Mobile Cranes”. Currently professor at University of Louisiana-Lafayette.
8) Khalid Sorensen. Started Fall ’03. M.S. May ’05, Ph.D. awarded August ’08. “Combined Feedback Control and Command Shaping of a Bridge Crane.”
9) Adan Vela. Started Fall ’06. Ph.D. awarded Dec. ’11. “Bounds on Controller Taskload Implementing Conflict-Resolution Algorithms in an Airspace.”
10) Kelvin Peng, Started Spring ’08, Ph.D. awarded Dec. ’13, “Methods for Improving Crane Performance and Ease of Use.”
11) Ehsan Maleki, Started Fall ’08, Ph.D. awarded Dec. ’13, “Control of Human-Operated Machinery with Flexible Dynamics.”
12) James Potter, Started Fall ’09, Ph.D. awarded Dec. ’13, “Input-Shaped Manual Control of Helicopters with Suspended Payloads.”
13) Arto Kivila, Started Fall ‘13, Ph.D. awarded Aug.’17, “Modeling, Estimation and Control for Serial Flexible Robot Arms.”
14) Daichi Fujioka, Started Fall ’10, Ph.D. awarded Aug.’17, “Input-Shaped Model Reference Control for Flexible Systems.”
15) Christopher Adams, Started Fall ’12, Ph.D. awarded Dec. ’18, “Modeling and Control of Backdrivable Flexible Systems”
16) Ali AlSaibie, Started Fall ‘12, Ph.D. awarded Dec. ’18, “Mechatronic Design of Micro Autonomous Underwater Vehicles for Confined Spaces”
17) Arnoldo Castro, Started Spring ’16, Ph.D. awarded Dec. ’19, “Dynamics and Control of Self-Balancing Transporters”

B1.b. In Process Ph.D. Students

1) Alison Jenkins, Started Spring ’20, Passed Quals Fall 2021
2) Tyler Rome, Started Spring ’21, Passed Quals Fall 2022

B2. M.S. Students (Indicate Thesis Option for Each Student)

B2.a. Graduated M.S. Students

1) Mike Kenison. Graduated Dec. '99 - "Command Generation in Control System Design for Systems with Parameter Variations." Currently Development Engineer, Schlumberger.
2) Karen Grosser. Graduated May '00 - "Input Shaping for Telerobotic Manipulators." Currently Development Engineer, Schlumberger.

NJOY Exhibit 2022.318
Juul v. NJOY
IPR2024-00161

3) Erika Ooten. Graduated Dec. '00 - "Command Generation for Flexible Systems Using Numerator Dynamics and Sliding Mode Control." Currently Engineer at Exxon-Mobil.
4) Kris Kozak. Graduated Aug. '01 - "Dynamic Analysis of Parallel Manipulators and Digital Input Shaper Computation Using Linear Optimization." Currently a Post-doc at Tsinghua University.
5) Mike Robertson. Graduated May '01. "Methods for Generating Deflection-Limiting Commands." Currently Post-doc at Air Force Research Lab.
6) Joel Fortgang. Graduated May '02 - "Concurrent Design of Input Shaping and Vibration Absorbers."
7) Jason Lawrence. Graduated August '02 - " Using Input Shaping to Optimize Point-to-Point Motions in PD Controlled Systems with Coulomb Friction."
8) Raynald Eloundou. Graduated August '02 - "Investigation of Various Reference Commands for Vibration Reduction." Currently Mechanical Engineer at Hitachi.
9) John Huey. Graduated August '03. “Dynamics and Vibration Control of Large Area Manipulators.”
10) Sam Klooster. Graduated Spring ’04. “Design of an Active Safety Seat.” Currently mechanical engineer at Lockheed Martin.
11) Joshua Vaughn. Graduated Spring ’04. “Active and Semi-Active Control to Counter Vehicle Payload Variation.” (coadvised with Dr. Nader Sadegh)
12) Khalid Sorensen. Graduated Spring ’05.”A Combined Feedback and Command Shaping Controller for Improving Positioning and Reducing Cable Sway in Cranes”
13) Vlad Patrangenaru. Graduated Spring ’06. “Design of Active Wheelchair Seats to Compensate for Extensor Tone in Children.”
14) Azeem Meruani, Spring ’06. “Tweel Technology Tires for Wheelchairs and Instrumentation for Measuring Everyday Wheeled Mobility”
15) David Blackburn. Graduated Summer ’06. “Control of Space Tethers.”
16) Jim Kitchen. Graduated Summer ’06. “Design of an Dynamic Wheelchair Seat.”
17) Ray Manning. Graduated Spring ’08 “Improving the Control of Two-Mode Flexible Systems with Input Shaping”
18) Jon Danielson. Graduated Summer ’08 “Mobile Boom Crane Dynamics and Control”
19) Andreas Rauch, Graduated Summer ’08 “Stability Analysis of Mobile Boom Cranes”
20) Daichi Fujioka, Graduated Summer ‘10, “Dynamic Stability of Mobile Boom Cranes”
21) Kelvin Peng, Graduated Fall ‘09, “Interfaces and Control Systems for Intuitive Crane Control”
22) Ehsan Maleki, Graduated Summer ’10, “Dynamics and Control of a Small-Scale Mobile Boom Crane”

NJOY Exhibit 2022.319
Juul v. NJOY
IPR2024-00161

23) Brice Pridgen, Graduated May ’11, “Comparison of Polynomial Profiles and Input Shaping for Industrial Applications”
24) Arnoldo Castro, Graduated Summer ’12, “Modeling and Dynamic Analysis of a Two-Wheeled Inverted-Pendulum”
25) Christopher Adams, Graduated Summer ’12, “Modeling and Control of Helicopters Carrying Suspended Loads”
26) Eileen Hernandez, Graduated Fall ’12, “Dynamic Characterization and Analysis of Aerial Lifts”
27) Arto Kivila, Graduated Aug. ’13, “Touchscreen Interfaces for Machine Control and Education”
28) Alex Miller, Graduated Dec. ’13, “Dynamics and Control of Dual-Hoist Cranes Moving Distributed Payloads”
29) Athony Garcia, Graduated Dec. ’14, “Improved Friction, Contact and Dynamic Simulation Model to Study the Behavior of Payloads During Off-Centered Crane Lifts”
30) John Harber, Graduated May ’16, “A Dual Hoist Robot Crane for Large Area Sensing”
31) Sima Rishmawi, Graduated May ’16, “Tip-Over Stability Analysis of Crawler Cranes in Heavy Lifting Applications”
32) Yujia Yang Graduated May ’17, “Automated Longitudinal Payload Lift-up Using Bridge Cranes”
33) Nickolas Johnson, Graduated May’17, “Control of a Folding Quadrotor with a Slung Load Using Input Shaping.”
34) Franziska Schlagenhauf, Graduated Aug. ’17, “A Kinematic Upper Body Model for Evaluating Clothing”
35) Xiaoshu Liu, Graduated Dec. ’17, “Numerical Investigation of Affordable 2D Lidar Sensors for Autonomous Driving Under a Specially-Structured Driving Environment”
36) Luk, Henry, Graduated May '20, Non-thesis Master's, Project: Dynamics of LRA Devices Within Wrist Bands
37) Lyman, Colin, Graduated August '21, Non-thesis Master's, Project: Development of Multi-LRA Devices
38) Ravishankar, Praveen, Graduated August '21, Non-thesis Master's, Project: Development of Haptic Signals for Multi-LRA Devices
39) Schmidt, Ryan, Graduated August '22, Non-thesis Master's, Project: Sensing of LRA Back EMF

B2.b. In Process M.S. Students

1) NA

NJOY Exhibit 2022.320
Juul v. NJOY
IPR2024-00161

B3. Undergraduate Students

Kanako Abe, Hafeez Alam, Ulf Andresen, Derek Bastien, Fernando Bazerghi, Esteban Benero (SURE), Dustin Bergman, Dwayne Bobb (SURE - Morehouse College), Carrie Boles, Justis Brogan, Jeff Clement, Maria Cox (SURE), Jon Danielson, Chuck Devane, Raynald Eloundou, Adrian Erb (Swiss), Matthew Falkenberg (PURA), Brian Fatkin, Jonathon Fonseca, Craig Forest, Damien Gaudry, Terry Hall, Samir Idnani, Walker Inman, Taft Jones (SURE), Paul Jurek, Attir Khalid, Dooroo Kim, Jae-Hyung Kim, Nathan Knight, Prerana Kumar, Bumsoo Lee, Caitlyn Leksana, Earl Lewis, Alan Martin, Timothy Melano (SURE – Berkeley), Ben Myers, Chad Nicholson, Noav Nossenson (SURE), Patrick Opdenbosch, Adnan Pandjou, Tejan Poage, Jessica Powell, April Pritchard (SURE), Devshan Renganathan, Caroline Rhee, Nathan Ritz, Nick Sabogal, Prachi Sahoo, Dushyant Sharma, Varun Sharma (PURA), Kimberly Sheafe (SURE – Stanford), Anderson Smith (PURA), Jonathon Smith, Josh Spiers, Christoph Stäheli (Swiss), Lee Stokes, Ethan Stone (PURA), Art Terdpravat, Brandon Terrell, Rory Thomas (SURE – John Hopkins), Andrew Timm, Adam Vela (SURE), Rolf Weiss (Swiss), Amber Welsh, Kevin Yang, Aika Yano, Jieun Yoo.

B5. Mentorship of Postdoctoral Fellows or Visiting Scholars

B5.a. Postdoctoral Fellows

1) Dr. Kris Kozak. June 2003-Dec. 2003, "Development of a Hyperactive Seat."
2) Dr. Joshua Vaughan. Jan. 2010–August 2012, "Development of an Aerospace Manufacturing Center."
3) Dr. Christopher Adams. Jan. '19-present, "Input Shaping Mobile Crane Controllers"

B5.b. Visiting Scholars

1) Prof. Seong-Wook Hong, Kumoh National University, Kumi, Korea, Feb. 2004-Feb. 2005.
2) Prof. Juan de Juanes Marquez, Escuela Tecnica Superior de Ingenieros Industriales (ETSII), Madrid, Spain, June 2005-Dec. 2005.
3) Prof. Yoon-Gyeoung Sung, Chosun University, Gwangju, Korea, July 2006-August 2007.
4) Prof. Mingxiao Dong, Shandong Jianzhu University, China, Dec 2007-May 2008
5) Ji Sup Joon, Division Director, Advanced Fuel Cycle System Eng., Korea Atomic Energy Research Institute, Korea, September 2008-September 2009
6) Prof. Zhang Yizhuo, North East Forestry University, Harbin, China, Dec. 2009 – Dec. 2010
7) Prof. Youmin Hu, Huazhong University of Science & Technology, Wuhan, China, Jan. 2010-Jan 2011

NJOY Exhibit 2022.321
Juul v. NJOY
IPR2024-00161

8) Prof. Kyoungseok Park, Kumoh National Institute of Technology, Gumi, Korea, June 2010-June2011
9) Prof. Jie Huang, Beijing Institute of Technology, August 2014-July 2105
10) Prof. Dongjoo Kim, Kumoh National Institute of Technology, Gumi, Korea, Feb. 2016 - Feb. 2017
11) Stanislao Grazioso, Università degli Studi di Napoli "Federico II", Napoli, Italy, August 2016-Dec. 2016
12) Dr. Ali AlSaibie, Kuwait University, July-August 2023

C. Educational Innovations and Other Contributions

a) New Course Development

ME 6404 - Advanced Control System Design and Implementation. Course was completely overhauled, updated, and expanded for the Fall of 2001. The result was essentially a new course. A book, *Command Generation for Dynamic Systems*, was written to compliment the course curriculum. A portable robotic bridge crane was constructed so that this course could be taught at Georgia Tech Lorraine in the fall of 2004. Siemens sponsored the crane construction and also a two-day conference at GTL that centered on the crane and the associated curriculum development: http://singhose.marc.gatech.edu/SiemensGTL/. A portable tower crane was also constructed for the course. The tower crane was used at Tokyo Tech for 2 years. Students conducted remote operation tests via the internet. The course was also taught at MIT during the fall of 2010 in conjunction with Professor Warren Seering of MIT. The course was expanded in the fall of 2011 to include a distance learning curriculum that uses remote-operated labs.

ME 4863 – Emerging Technology Law. Course was designed to educate engineering students about legal constructs that effect engineering activities in the area of emerging technology. The course is cross listed as BME4853. The course has two main components: Product Liability and Intellectual Property. In addition to weekly lectures, the course includes weekly studio sessions and mock trials.

b) Laboratory Experiments Developed: The new version of Advanced Control System Design and Implementation has a major laboratory component. An entire sequence of laboratory projects were developed for the course using the large bridge crane in the MARC building and hardware in the Love Building hydraulics laboratory. The crane in the MARC building has been equipped with oscillation-reducing technology that is taught in ME6404. The crane was also used as a testbed in the senior-level experimental engineering course, ME4055. Several laboratory projects were developed for ME2110, Creative Decisions and Design. A paper describing these developments was presented at the 2nd IFAC Conference on Mechatronic Systems. A

NJOY Exhibit 2022.322
Juul v. NJOY
IPR2024-00161

two-week curriculum on PLC programming was developed along with PLC workstations to conduct laboratory activities. Hands-on control experiments for ME4452 (Control Systems) were developed to utilize the NI MyRIO controller along with a flexible-beam experimental setup.

c) **Interactive Instructional Materials Developed:** Dr. Singhose has developed interactive textbooks for both introductory mechanical design (with an emphasis on mechatronics) and advanced control system implementation (with an emphasis on command-shaping control). Features of interactive textbooks include: embedded videos that can be viewed with the tap of a finger, picture slideshows, user-controlled simulations, and interactive charts that accept user input and provide immediate feedback. Dr. Singhose has also developed a series of remote-operated experimental cranes and aerial lifts that have been used extensively in educational activities.

VI. Service

A. Professional Contributions

Journals

Int. Journal of Control, Automation, and Systems (IJCAS), Editorial Board Member, 2005-Present

Mechatronics, Associate Editor, 2008

Control Engineering Practice, Designated Editor, 2007-2010

Conferences

Asian Control Conference, Associate Editor of Contributed Papers, 2017

Int. Symposium on Flexible Automation, Program Chair, 2008

IEEE/ASME Int. Conference on Advanced Intelligent Mechatronics, Program Committee, 2007

Int. Symposium on Flexible Automation, Program Committee, 2006

Advanced Intelligent Mechatronics Program Committee, member, 2005

International Conference on Motion and Vibration Control Program Committee, member, 2004

American Control Conference Program Committee, member, 2004

Japan-USA Symposium on Flexible Automation Program Committee, member, 2004

Reviews

National Science Foundation, Division of Design Manufacturing and Industrial Innovation, proposal reviewer

National Science Foundation, Sensors and Sensor Systems, proposal reviewer

AIAA Journal of Guidance, Control, and Dynamics, reviewer

AIAA Journal of Spacecraft and Rockets, reviewer

AIAA Guidance, Navigation, and Control Conference, reviewer

American Control Conference, reviewer

ASME Journal of Dynamic Systems, Measurement, and Control, reviewer

NJOY Exhibit 2022.323
Juul v. NJOY
IPR2024-00161

ASME Design Engineering Technical Conferences, reviewer
ASME Journal of Vibration and Acoustics, reviewer
Automatica, reviewer
Control Engineering Practice, reviewer
Control Systems Technology, reviewer
IEEE/ASME Transactions on Mechatronics, reviewer
IEEE Transactions on Systems, Man, and Cybernetics, reviewer
IEEE Conference on Control Applications, reviewer
IEEE Int. Conference on Robotics and Automation, reviewer
Industrial & Engineering Chemistry Research, reviewer
Journal of the Franklin Institute, reviewer
Journal of Sound and Vibration, reviewer
Mechatronics, reviewer
Mechatronics 2000, Panel reviewer

Industrial Project Advising

Milliken Summer Faculty Challenge – 2000

B. Public and Community Service

Standards Committees

IEEE Virtual Reality and Augmented Reality Standards Working Group, 2018-2019
ASTM F15.18 - Cribs, Toddler Beds, Play Yards, Bassinets, Cradles and Changing Tables, 2018-2019
ASTM D13-Textiles, D13.66 – Sewn Product Automation subcommittee member, 2017-2019
ASTM F08.52, F08.67 - Pole Vault Pole Testing and Pole Vault Landing Pads subcommittee, member, 2000-2006
USA Track & Field Pole Vault Equipment Task Force, member.

Legislative Testimony

Washington State Legislature, Senate Labor & Commerce Committee, SB5900 – Construction Crane Safety, 1/11/24
Washington State Legislature, House Labor and Workplace Standards Meeting, HB2022 – Construction Crane Safety, 1/12/24

C. Institute Contributions

Organized and supervised Georgia Tech Rescue Robot Team, 2013-present
Organized and supervised Georgia Tech CanSat Team, 2002-2012
ASME Student Group, Faculty Advisor, 2007-2012
SME Student Group, Faculty Advisor, 2001-2007
Pole vault coach for Georgia Tech track and field team (1998-2000)
2009 Chair of Director of Design Search Committee

NJOY Exhibit 2022.324
Juul v. NJOY
IPR2024-00161

2015 Chair of Zeigler Woodruff School Outstanding Educator Award Committee

Woodruff School Committee member:
2023 Zeigler Outstanding Educator Award Committee
2022 Zeigler Outstanding Educator Award Committee
2021-23 RPT
2019-21 Graduate Student Development
2015-16 RPT
2016-17 PPR
2013-16 Undergraduate
2012 Director of Design Search Committee
2008 HR Director Search Committee
2006-07 Undergraduate
2003-04 Faculty Awards
2001-03 Undergraduate
2000 Faculty Recruiting
1999 Graduate
1998 Undergraduate

NJOY Exhibit 2022.325
Juul v. NJOY
IPR2024-00161

APPENDIX 2

Dr. William Singhose
Expert Witness Testifying Experience
2019-2024

1. Frese v. Segway City Tours
   12/16 - 7/2019
   US District Court for District of Columbia, Case 16-2373 (JEB)
   Trombly & Singer
   Analysis of Segway accident and wheel traction
   Deposition: 2/12/19

2. Wirtgen America v. Caterpillar Paving Products
   7/2018-7/2019
   IPR 2018-01201, IPR 2018-01202
   Finnegan Henderson
   Analysis of construction machine patent US 7,140,693
   Deposition: 5/23-5/24/19

3. Juul Labs v. Various
   2/2019-7/2019
   Certain Electronic Nicotine Delivery Systems and Components Thereof
   ITC Investigation No. 337-TA-1139
   Mei & Mark
   Analysis of nicotine delivery system containers, cartridges, and patents
   Deposition: 6/6/2019

4. Unicorn Global v. GoLabs
   6/2019-7/2021
   Civil Action No. 3:19-CV-00745-N
   DLA Piper
   Analysis of hoverboard devices and patents
   Depositions (2): 8/23/19 and 9/25/19

5. Hyosung v. Diebold
   6/2019-6/2021
   Civil Action No. 3:16-cv-364-N
   Alston & Bird
   Analysis of ATM patents
   Deposition: 9/27/19

6. Wong et al. v. Morrow Equipment et al.
   7/2019-3/2022
   Civil Action No. 19-2-33286-7 SEA
   Swanson, Gardner, and Meyers
   Depositions: 1/3/22, 1/31/22
   Court Testimony: 1/31-2/1/22, 3/2/22

NJOY Exhibit 2022.327
Juul v. NJOY
IPR2024-00161

7. Guntert and Zimmerman v. Gomaco
   5/20-10/21
   C.A. No. 5:20-cv-4007
   Finnegan Henderson
   Analysis of construction machines and patents
   Deposition: 8/21/20

8. Coleman Co. vs. Team Worldwide Corp.
   5/2020-1/23
   Civil Action No. 2:20cv351-RGD-RJK
   Meunier Carlin & Curfman LLC
   Analysis of air mattresses and patents
   Deposition: 8/18/21

9. Gamevice v. Nintendo
   6/20-12/20
   Certain Portable Gaming Console Systems with Attachable Handheld Controllers and Components Thereof
   ITC Investigation No. 337-TA-1197
   Finnegan Henderson
   Analysis of gaming consoles and patents
   Depositions: 9/29/20, 10/2/20; Trial Testimony: 12/10/20, 12/14/20

10. Gomaco v. Guntert and Zimmerman
    9/2020-7/2021
    IPR2020-01698, IPR2021-00050,IPR2021-00136, IPR2021-00234
    Finnegan Henderson
    Analysis of construction machine patents US9,708,020 & US10,196,101 & US10,029,749 & US9,908,57
    Deposition: 7/21/21 & 7/23/21

11. Unicorn Global v. GoLabs
    11/2020-7/2021
    Civil Action No. 3:20-cv-02023
    Offit Kurman, P.A.
    Analysis of hoverboards and patents
    Deposition: 3/31/21

12. Courkamp v. Fisher Price
    2/26/20-10/22
    No. CV-19-02689-PHX-GMS
    US District Court for the Northern District of Arizona
    Goldberg & Osborne LLP
    Analysis of infant incline sleepers

NJOY Exhibit 2022.328
Juul v. NJOY
IPR2024-00161

Deposition: 9/14/21, 9/27/21

13. iRobot v. SharkNinja
    6/20-1/21
    Certain Robotic Floor Cleaning Devices and Components Thereof
    ITC Investigation No. 337-TA-1252
    Finnegan Henderson
    Analysis of robotic cleaners and patents
    Deposition: 10/6/21
    Court Testimony: 1/10-1/12/22

14. DJI v. Textron
    9/21-10/22
    IPR2022-00162 and IPR2022-00162
    Finnegan Henderson
    Analysis of drone patents
    Deposition: 8/11/22, 10/7/22

15. Caterpillar Paving Products v. Wirtgen America
    12/21-7/23
    IPR2022-01264, IPR2022-01277, IPR2022-01278, IPR2022-01310
    Finnegan Henderson
    Analysis of construction machine patent US9879390, US9879391, US8424972
    Deposition: 4/6/23, 4/12/23

16. Opex v. HC Robotics
    1/22-12/22
    Certain Automated Put Walls and Automated Storage and Retrieval Systems, Associated Vehicles, Associated Control Software, and Component Parts Thereof
    ITC Investigation No. 337-TA-1293
    Desmarais
    Analysis of factory automation and mobile robot patents
    Deposition: 9/22/22
    Court Testimony: 12/1/22

17. Bissell v. Tineco
    2/22-12/22
    Certain Wet Dry Surface Cleaning Devices
    ITC Investigation No. 337-TA-1304
    Quinn Emanuel
    Analysis of wet/dry cleaning devices and patents
    Deposition: 10/27/22
    Court Testimony: 12/5/22 and 12/9/22

18. LightGuide v. Amazon

NJOY Exhibit 2022.329
Juul v. NJOY
IPR2024-00161

3/23-12/23
IPR2023-01423
Hueston Hennigan LLP
Analysis of assembly system patents US10528036, US9658614, and US7515981
Deposition: 10/20/23

NJOY Exhibit 2022.330
Juul v. NJOY
IPR2024-00161