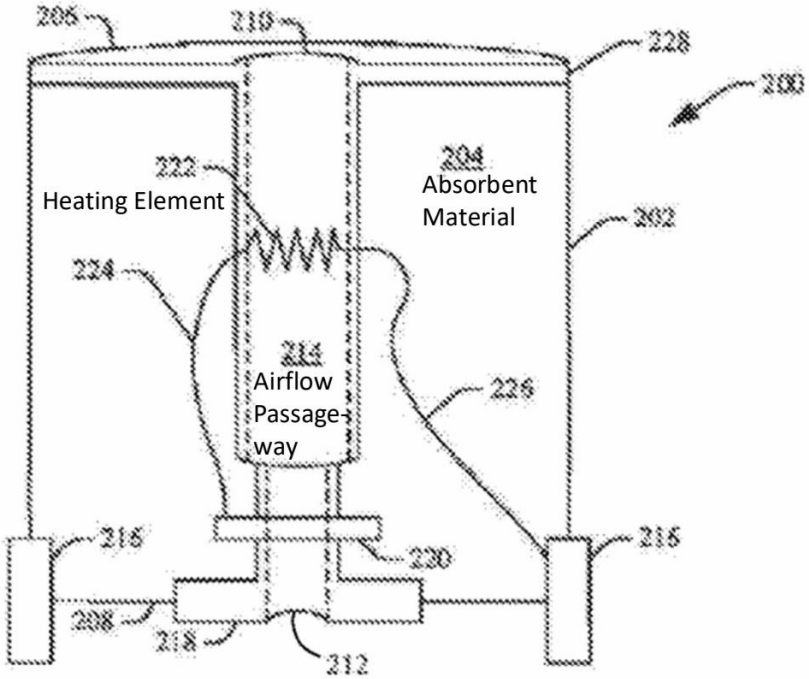

FIG. 2

EXHIBIT
7

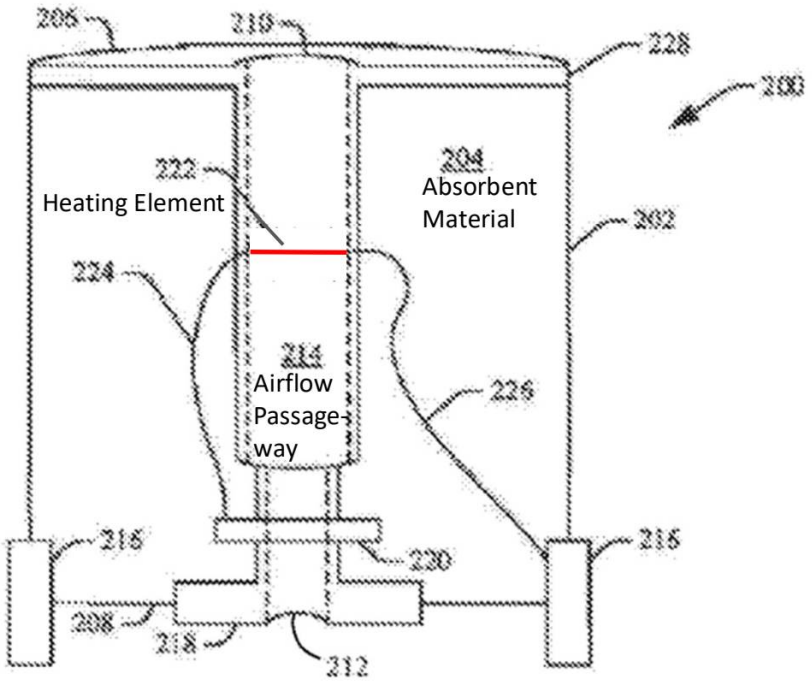

FIG. 2

Version 2

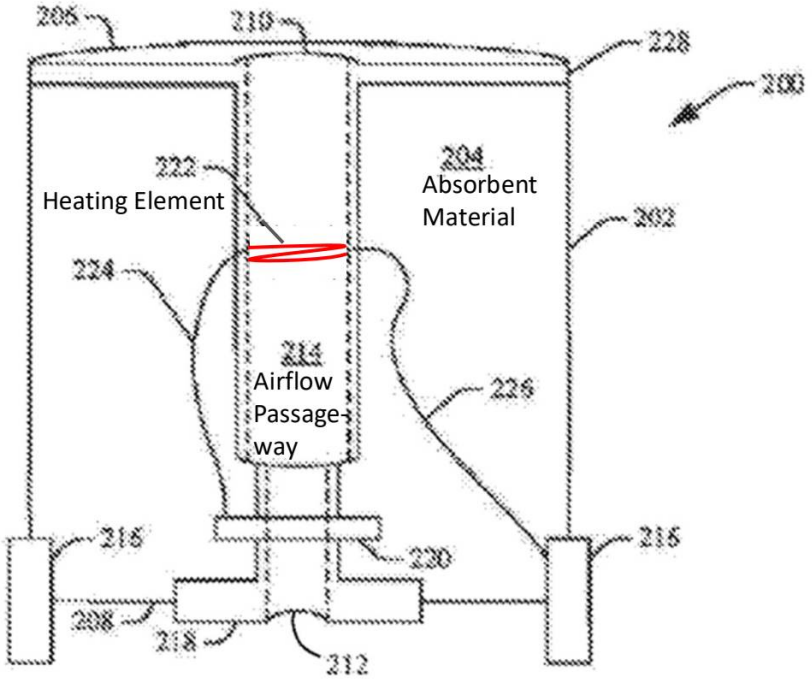

FIG. 2

Version 3

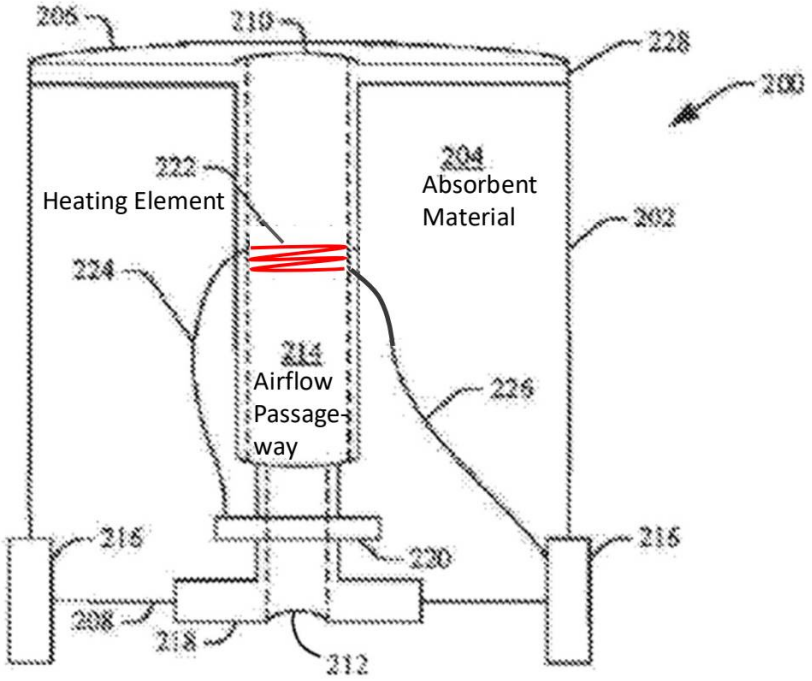

FIG. 2

Version 4