United States Patent [19]

Schroeder

[11] **Patent Number: 4,933,741**

[45] **Date of Patent: Jun. 12, 1990**

[54] **MULTIFUNCTION GROUND PLANE**

[75] Inventor: **Jack A. Schroeder**, Scottsdale, Ariz.

[73] Assignee: **Motorola, Inc.**, Schaumburg, Ill.

[21] Appl. No.: **270,187**

[22] Filed: **Nov. 14, 1988**

[51] **Int. Cl.**[5] **H01L 23/48**

[52] **U.S. Cl.** **357/70**; 174/52.4; 361/410

[58] **Field of Search** 357/70, 68, 84; 361/410, 414, 421; 174/52.4

[56] **References Cited**

U.S. PATENT DOCUMENTS

4,410,906 10/1983 Grabbe 357/68

4,811,082 3/1989 Jacobs et al. 357/80

Primary Examiner—James W. Davie

Attorney, Agent, or Firm—Charles R. Lewis

[57] **ABSTRACT**

A multifunction ground plane for an electrical device such as an integrated circuit is provided by a plurality of conductors each having one end thereof adapted to be coupled to the electrical device with a ground plane adjacent and electrically isolated from said plurality of conductors. The ground plane includes a plurality of electrically isolated portions each of which can be coupled to the electrical device to provide operating potential and/or signals thereto or therefrom. The isolated ground plane portions have an impedance less than that of the electrical conductors and provide an alternate means for connecting operating potential(s) and/or operating signals to and from the electrical device while still functioning as a ground plane for the electrical conductors.

12 Claims, 1 Drawing Sheet

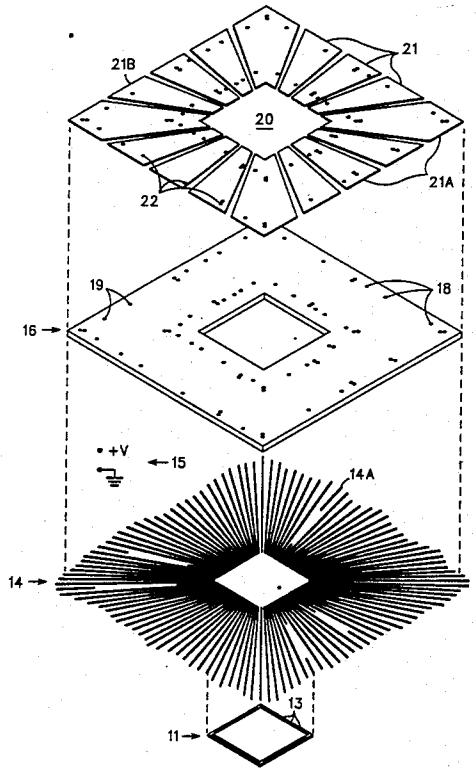

NXP EXHIBIT 1008

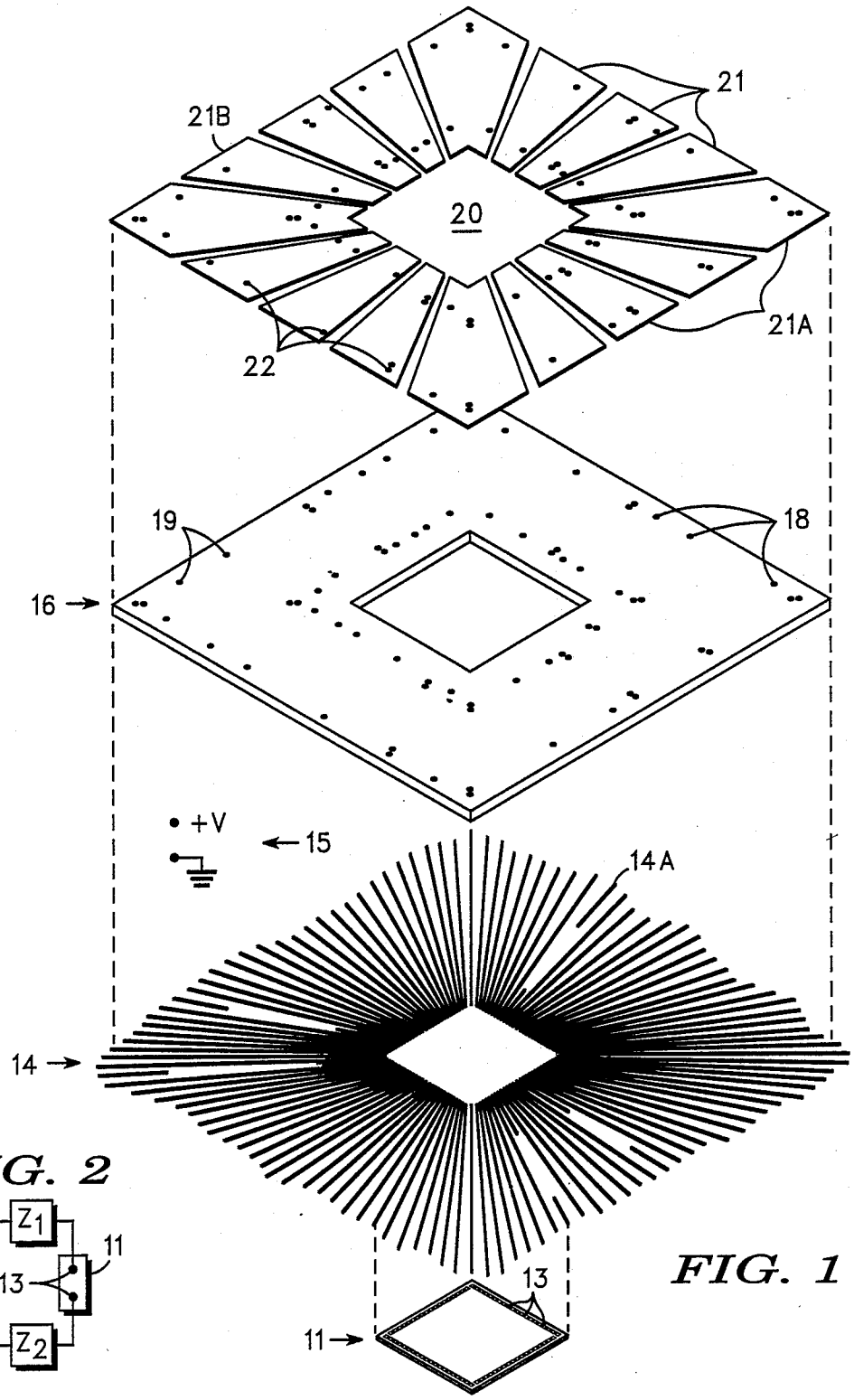

FIG. 1

FIG. 2

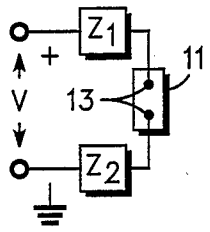

MULTIFUNCTION GROUND PLANE

BACKGROUND OF THE INVENTION

This invention relates to a ground plane for a plurality of associated electrical conductors with the ground plane comprising a plurality of isolated segments to provide alternate conductors having a lower impedance than the associated plurality of conductors. More specifically, the present invention relates to a ground plane for a plurality of conductors coupled to an electrical device such as an integrated circuit, wherein the ground plane contains a plurality of isolated portions that provide lower impedance conductive paths to the integrated circuit.

As the complexity of electrical devices such as integrated circuits increase, while the size of the components thereon correspondingly decreases, the number of electrical conductors or leads connected or coupled to the integrated circuit to enable operation of the integrated circuit increase in number and correspondingly decrease in size. For example, at this time it is very common that an integrated circuit will have hundreds of conductors or leads connected thereto and typically these are no more than about one-half mil thick, about two mils in width, with about two mils spacing therebetween. These small conductors have a considerable impedance such that a significant voltage drop takes place along the length of the conductors that supply operating power to the integrated circuit. Further, variations of the DC operating current creates switching noise due to the high impedance of these conductors. Additionally, the capacitive coupling between these conductors causes cross talk on the signal lines going to and from the integrated circuit. Heretofore in the prior art a ground plane associated with the plurality of conductors has been used to reduce the capacitive coupling between the conductors to reduce cross talk on the signal lines. This ground plane has also been used as a conductor for one side of the DC supply used to power the integrated circuit.

SUMMARY OF THE INVENTION

A multifunction ground plane in accordance with the present invention is obtained by a ground plane associated with a plurality of conductors and comprises a plurality of electrically isolated segments or portions. The plurality of conductors are connected or coupled at one end thereof to an electrical device such as an integrated circuit. By selectively electrically connecting certain ones of the conductors to selected ones of the isolated portions of the ground plane, lower impedance paths are provided for applying operating power to the integrated circuit as well as providing lower impedance paths for applying signals to or obtaining signals from the integrated circuit. In addition to providing lower impedance paths to and from the integrated circuit, the segmented ground plane also performs the function of a ground plane for the plurality of associated electrical conductors.

BRIEF DESCRIPTION OF THE DRAWING

FIG. **1** is an exploded isometric view of a ground plane electrical conductor assembly in accordance with the present invention; and

FIG. **2** is a logic representation of impedance paths provided by the ground plane-conductor assembly of the present invention.

DETAILED DESCRIPTION OF THE INVENTION

Referring now to FIG. **1**, there is shown an electrical device such as an integrated circuit **11**. The integrated circuit **11** is generally a planar device having a plurality of connector pads **13** around the periphery thereof which allow operating power **15** to be applied thereto and to allow operating signals to be applied to and obtained from the integrated circuit **11** Surrounding the integrated circuit **11** are a plurality of electrical conductors **14**. The ends of the conductors **14** adjacent the integrated circuit **11** are coupled to the pads **13** by any number of well known means. For example, the ends of the conductors **14** may be directly connected to the pads **13** by means of temperature and/or pressure in accordance with any number of well known processes. Additionally, the ends of the conductors **14** may be coupled to the pads **13** by way of thin wires (not shown) in accordance with well known techniques. The ends of the conductors **14** remote from the integrated circuit **11** may extend to a metallic leadframe (not shown), may extend to and be part of a tape automated bonding (TAB) assembly, may extend to and be part of a well known pin grid array (PGA) assembly, may be part of a multichip assembly, or any number of other well known connector and/or packaging techniques for electrically coupling to an integrated circuit. Because of the small physical size of the electrical conductors **14**, they represent a significant impedance to operating potential and current **15** applied to the integrated circuit **11** causing an undesirable voltage drop along the length of the conductors **14**. Additionally, capacitive coupling between the conductors **14** causes cross talk on the conductors **14** which apply signals to and/or derive signals from the integrated circuit **11**. Further, the impedance of the conductors **14** create switching noise when the DC operating current **15** applied to the integrated circuit **11** varies.

The capacitive cross coupling between the conductors **14** can be reduced by a ground plane **20** which also surrounds the integrated circuit **11** and is located adjacent the plurality of conductors **14**. Heretofore in the prior art this ground plane **20** was a unitary piece of electrically conductive material. This ground plane **20** reduced cross talk on the electrical conductors **14** used for signal lines and also sometime served as a return for one of the terminals of the operating potential **15** applied to the integrated circuit **11**.

In accordance with the present invention the ground plane **20** is comprised of a plurality of electrically isolated portions **21**. These isolated portions **21** have a portion thereof adjacent the integrated circuit **11** and another portion that extends outward away from the integrated circuit in a manner similar to that of the electrical conductors **14**. The thickness of the ground plane **20** may be substantially the same as the thickness of the electrical conductors **14**. However, the width of the isolated portions **21** of the ground plane **20** is considerably greater than the electrical conductors **14** thereby providing a much lower electrical impedance than do the electrical conductors **14**.

The segmented ground plane **20** is electrically isolated from and maintained substantially in parallel with the conductors **14** by means of an insulating layer **16**

which may comprise any suitable material such as polyimide. The insulating material has selectively placed vias **18** thereon which are filled or plated with an electrically conductive material **19** such as copper. Each end of the resulting copper conductor **19** on opposite sides of the insulator **16** is connected to selected ones of the isolated ground plane portions **21** and selected electrical conductors **14**. This is done in accordance with any number of well known processes where pressure and/or temperature is applied to the conductors **14** and the ground plane **20** to create a good electrical connection between them and the conducting material **19** in the vias **18**. An alternate method of connecting selected ground plane portions **21** to selected conductors **14** would be by using plated through hole techniques well known in the circuit board industry.

For purposes of illustration only, the approximate point of contact of the conductor **19** in the vias **18** with the ground plane portions **21** is shown by dots **22** on the ground plane portions **21**. As will be apparent to those skilled in the art, the dots **22** do not physically exist on the ground plane **20** isolated segments **21**.

Even though FIG. **1** shows the assembly in an exploded view, the ground plane **20**, insulating material **16** and electrical conductors **14** form a thin laminate having a thickness determined by the thickness of the conductors **14**, insulating material **16**, and ground plane **20** segments **21**. Once connected to the conductors **14** by way of the pads **13** the integrated circuit **11** can be protected by a suitable covering or coating in accordance with the package in which it is to be utilized. For example, the integrated circuit **11** and associated conductors **14** and segmented ground plane **20** may be packaged in accordance with well known TAB, PGA, plastic encapsulation or other techniques. When the integrated circuit **11** is plastic encapsulated, an option is to also completely enclose and encapsulate the surrounding segmented ground plane **20** and underlying electrical conductors **14**.

In accordance with the present invention the electrical conducting material **19** in the vias **18** can be utilized to electrically connect a ground plane segment at its portion adjacent the semiconductor die to an underlying electrical conductor **14**. In a similar manner the end of the isolated ground plane **20** portion **21** removed from or remote from the integrated circuit **11** is coupled to the same conductor **14** thereby providing a path to the integrated circuit **11** that includes the conductor **14** in parallel with the ground plane segment **21** to which it is connected (see ground plane segment **21B**). Alternatively, the electrical conductor **14** may be discontinued intermediate the two vias **18** that connect it to the isolated ground plane **21** portion such that the path to the integrated circuit **11** is made by way of the isolated ground plane portion **21** (see conductor **14A**). In a like manner more than one, i.e. a plurality of the conductors **14**, may be connected to the same ground plane portion **21** when the current carrying capacity of a single conductor **14** is insufficient to provide reliable connection to the ground plane portion **21** (see ground plane portion **21A**). Further, a ground plane portion **21** can be connected at one or both ends thereof to an underlying conductor **14** by way of two or more vias **18** (see ground plane **21A**). As will now be apparent, access to the integrated circuit **11** for operating potential and current, signals applied thereto, signals derived therefrom, etc. can be provided by way of any combination of the conductors **14**, conductors **14** in parallel with isolated segments **21** of the ground plane **20**, or just various segments **21** of the ground plane **20**.

Reference to FIG. **2** shows connection to two pads **13** on the integrated circuit **11**. One connection to the integrated circuit **11** has the impedance Z1 while the other connection to the integrated circuit has the impedance Z2. If the connection to the integrated circuit is by way of the conductors **14** Z1 and Z2 will be a relatively high impedance. However, this impedance can be reduced significantly if connection to the integrated circuit **11** is made by way of one of the isolated ground plane **20** portions **21**. Accordingly, by applying operating potential or current **15** to the integrated circuit **11** by way of the isolated ground plane portions **21**, the impedance thereto is reduced substantially thereby reducing the resulting voltage drop thereacross and also decreasing switching noise caused by any variation in the operating current **15**. Also, use of the ground plane portions **21** to provide signals to the integrated circuit **11** and to derive signals from the integrated circuit **11** provides low impedance paths for such signals. This is particularly important with regard to smart power devices wherein the output signal contains a substantial amount of current.

As is now apparent, the isolated ground plane portions **21** being selectively electrically connectable to the electrical conductors **14** enable various combinations thereof to access or derive information or signals from the integrated circuit **11** by way of low impedance paths. In addition to providing low impedance to and from the integrated circuit **11** the isolated ground plane portions **21** taken together constitute a ground plane **20** for the plurality of conductors **14**. This reduces the cross coupling capacitance between the conductors **14** with a resulting reduction in the cross talk between the conductors **14** which carry signals to or from the integrated circuit **11**. Alternatively, the portion of a ground plane **21** adjacent the integrated circuit **11** may be connected directly to a pad **13** instead of by way of a conductor **14**.

Various changes and modifications of this invention as described will be apparent to those skilled in the art without departing from the spirit and scope of this invention as defined by the following claims.

I claim:

1. A multiconductor ground plane for an electrical device having a plurality of connecting pads thereon to enable operation of said electrical device comprising:

a plurality of conductors each having one end thereof coupled to at least one of said pads, and

a ground plane for said plurality of conductors,

said ground plane including a plurality of electrically isolated portions,

at least one of said isolated ground plane portions coupled to at least one of said pads to function as a conductor;

said ground plane portion conductors having an impedance lower than that of said plurality of conductors.

2. The ground plane according to claim **1** further comprising:

at least one electrical connection between at least one of said plurality of conductors and at least one of said ground plane portions to enable selected ones of said ground plane portions to be electrically coupled to selected ones of said pads.

3. The ground plane according to claim **1** further comprising:

an electrically insulating material located between said ground plane and said plurality of conductors to provide electrical isolation and substantially uniform spacing between said ground plane and said plurality of conductors.

4. The ground plane according to claim **3** further comprising:

electrical connections passing through said insulating material and connecting at least one of said ground plane portions at opposite ends thereof with at least one of said conductors to enable selected ones of said ground plane portions to be electrically coupled to selected ones of said pads.

5. The ground plane according to claim **1** wherein a said ground plane portion is electrically coupled to at least one pad on said electrical device which is to receive a potential to operate said device with said ground plane portion adapted to be coupled to a source of said operating potential.

6. The ground plane according to claim **1** wherein a said ground plane portion is electrically coupled to at least one pad on said electrical device which is to provide an output from said electrical device.

7. A multiconductor ground plane assembly comprising:

a semiconductor device having a plurality of connecting pads thereon to enable operation of said semiconductor device,

a plurality of conductors having one end adjacent said semiconductor device with said one end electrically coupled to at least one said pad, and

a ground plane located substantially parallel to and electrically isolated from said plurality of conductors and functioning as a ground plane for said plurality of conductors,

said ground plane including a plurality of electrically isolated portions with at least some of said electrically isolated portions having an area thereof adjacent to said semiconductor device;

at least one of said isolated ground plate portions electrically coupled to at least one of said pads to function as an electrical conductor to or from said semiconductor device;

said ground plane portion conductors having an impedance which is less than the impedance of any of said plurality of conductors.

8. The assembly according to claim **7** wherein said plurality of electrical conductors and said ground plane portions enable operating potential and/or signals to be applied to said semiconductor device and semiconductor device output(s) to be derived therefrom.

9. The assembly according to claim **7** wherein including an insulating material located between said ground plane and said plurality of conductors to provide electrical isolation and substantially uniform spacing therebetween.

10. The assembly according to claim **7** further including electrical connections between selected ones of said ground plane portions and selected ones of said ground plane portions to selected ones of said pads.

11. The assembly according to claim **7** wherein operating potential is applied to said semiconductor device by way of said isolated ground plane portions.

12. The assembly according to claim **7** wherein an output(s) from said semiconductor device is derived therefrom by way of selected ones of said ground plane portions.

* * * * *

UNITED STATES PATENT AND TRADEMARK OFFICE

CERTIFICATE OF CORRECTION

PATENT NO. : 4,933,741

DATED : June 12, 1990

INVENTOR(S) : Jack A. Schroeder

It is certified that error appears in the above-identified patent and that said Letters Patent is hereby corrected as shown below:

Column 6, line 19, delete "wherein" and insert --further--.

Column 6, line 26, after "said" insert --conductors to electrically couple selected ones of said--.

Signed and Sealed this

Eleventh Day of June, 1991

Attest:

HARRY F. MANBECK, JR.

Attesting Officer

Commissioner of Patents and Trademarks