UNITED STATES PATENT AND TRADEMARK OFFICE

BEFORE THE PATENT TRIAL AND APPEAL BOARD

MASIMO CORPORATION

Petitioner,

v.

APPLE INC.

Patent Owner.

Case No. IPR2023-00745
U.S. Patent No. US 10,076,257

DECLARATION OF ALAN L. OSLAN IN SUPPORT OF PETITION FOR *INTER PARTES* REVIEW OF U.S. PATENT NO. 10,076,257

TABLE OF AUTHORITIES

Page No(s).

I. INTRODUCTION 1

II. QUALIFICATIONS AND BACKGROUND 2

III. INFORMATION AND MATERIALS CONSIDERED 7

IV. RELEVANT LEGAL STANDARDS 9

A. Prior Art 9

A. Anticipation 10

B. Obviousness 10

B. Claim Construction 12

C. Perspective of a Person of Ordinary Skill in the Art at the Time of the Claimed Invention 13

D. Prior-Art Status of References 14

V. LEVEL OF ORDINARY SKILL IN THE ART 14

VI. THE ’257 PATENT 15

A. Overview of ‘257 Patent 15

B. Prosecution History of the ‘257 Patent 17

VII. CLAIM CONSTRUCTION 17

1. Embedded 17

2. Lead 19

3. Pad 22

4. Pocket 23

VIII. OVERVIEW OF THE PRIOR ART 23

A. Mills 23

B. Markel 24

IX. GROUNDS FOR UNPATENTABILITY 25

A. Ground 1: Claims 1-4, 8, 10, 11 and 14 are unpatentable as anticipated by Mills 25

1. Claim 1: "An electronic device for detecting a user's cardiac signal, comprising" 25

2. Claim 2: "wherein the first portion and the second portion are located on opposite sides of the electronic device" 37

3. Claim 3: "wherein the first portion is electrically isolated from the second portion" 38

4. Claim 4: "the first portion is separated from the second portion by a third portion of the enclosure; at least the third portion is constructed from a material having a first conductivity; and the first conductivity is insufficient to transmit the first electrical signal from the first pad to the second pad via the third portion" 39

5. Claim 8: "the enclosure further comprises at least one pocket underneath the exterior surface of the enclosure; and at least one of the first pad and the second pad is placed within the at least one pocket" 41

6. Claim 10: "the second lead is configured to detect the second electrical signal of the user's cardiac signal via the user's contact with the second portion of the enclosure" 42

7. Claim 11: "the second lead is configured to detect the second electrical signal of the user's cardiac signal via the user's contact with the second lead".....43

8. Claim 14: "an interior surface of the enclosure comprises an interior surface of the first portion, wherein the first pad is positioned on the interior surface of the first portion".....43

B. Ground 2: Claims 1-4 and 8-22 would be unpatentable because each claim would have been obvious in view of Markel in combination with Mills.....44

1. Claim 1: "An electronic device for detecting a user's cardiac signal, comprising".....44

2. Claim 2: "the first portion and the second portion are located on opposite sides of the electronic device".....57

3. Claim 3: "wherein the first portion is electrically isolated from the second portion".....59

4. Claim 4: "the first portion is separated from the second portion by a third portion of the enclosure; at least the third portion is constructed from a material having a first conductivity; and the first conductivity is insufficient to transmit the first electrical signal from the first pad to the second pad via the third portion".....60

5. Claim 8: "the enclosure further comprises at least one pocket underneath the exterior surface of the enclosure; and at least one of the first pad and the second pad is placed within the at least one pocket".....61

6. Claim 9: "a display, wherein the enclosure supports the display, and wherein at least a portion of the exterior surface of the enclosure forms at least a portion of an exterior surface of the electronic device behind the display and a third lead embedded with the display, wherein the third lead is configured to

detect a third electrical signal of the user's cardiac signal via the user's contact with at least one of the third lead and the display" 61

7. Claim 10: "wherein the second lead is configured to detect the second electrical signal of the user's cardiac signal via the user's contact with the second portion of the enclosure".....63

8. Claim 11: "wherein the second lead is configured to detect the second electrical signal of the user's cardiac signal via the user's contact with the second lead" 65

9. Claim 12: "wherein the first portion of the enclosure is a bezel" 66

10. Claim 13: "wherein the second portion of the enclosure is a bezel".....66

11. Claim 14: "wherein an interior surface of the enclosure comprises an interior surface of the first portion, wherein the first pad is positioned on the interior surface of the first portion" 67

12. Claim 15: "An electronic device for detecting a user's cardiac signal, comprising: 71

13. Claim 16: "wherein the first lead is configured to detect the first electrical signal of the user's cardiac signal via the user's contact with the first lead".....84

14. Claim 17: "wherein the second lead is configured to detect the second electrical signal of the user's cardiac signal via the user's contact with the second lead" 85

15. Claim 18: "wherein the second lead is configured to detect the second electrical signal of the user's cardiac signal via the user's contact with the display screen".....86

16. Claim 19: “the first portion of the electronic device comprises a bezel of the enclosure; the electronic device further comprises a non-conductive component positioned between the bezel and the display screen for electrically isolating the first lead from the second lead” 86

17. Claim 20: “wherein the first lead is configured to detect the first electrical signal of the user’s cardiac signal via the user’s contact with the first portion of the enclosure”.....87

18. Claim 21: “wherein the second lead is configured to detect the second electrical signal of the user’s cardiac signal via the user’s contact with the second lead” 88

19. Claim 22: “wherein the second lead is configured to detect the second electrical signal of the user's cardiac signal via the user's contact with the display screen”.....90

X. SECONDARY CONSIDERATIONS 90

XI. CONCLUSION.....91

I, Alan Oslan, do hereby declare:

I. INTRODUCTION

1. I, Alan L. Oslan, MSBE, MBA, have been retained by Knobbe, Martens, Olson & Bear, LLP, counsel for Masimo Corporation ("Masimo" or "Petitioner"). I understand that Masimo is petitioning for inter partes review of U.S. Patent No. 10,076,257 ("the '257 patent"; EX1001) and requests that the United States Patent and Trademark Office cancel Claims 1-4 and 8-20 of the '257 patent as unpatentable. The following discussion and analysis provide my opinion as to why Claims 1-4 and 8-20 would have been anticipated and/or obvious to a person of ordinary skill in the art ("POSITA") in November of 2008. This declaration is provided after my review and analysis of the '257 patent, the prior art, relevant background technology, and is also based on my education and experience, as well as additional materials identified herein.

2. I am being compensated for my work in this matter at my standard hourly rate for consulting services. My compensation in no way depends on the outcome of this proceeding.

3. The opinions set forth in this declaration are my independent opinions, formed after conducting significant analysis, over several days, related to whether the claims of the '257 patent would have been obvious in view of the prior art discussed in this declaration. I have been assisted by attorneys in preparing my

declaration in writing, based on my input and approval, and identifying the applicable legal standards that I applied in my analysis set forth in this declaration.

4. I understand that Petitioner will cite and rely on significant portions of my testimony and analysis set forth in this declaration in support of its Petition challenging the patentability of the ’257 patent.

II. QUALIFICATIONS AND BACKGROUND

5. I am currently president of ElectroSurge LLC. I founded ElectroSurge in 2010 to consult for other companies based on my extensive experience in medical device development projects. As president of ElectroSurge, I have consulted for several medical device companies on device design and testing, NIH grant support, expert witness for medical device patent litigation including wearable monitoring devices, understanding electrical properties of body tissues, and surface electrodes for stimulation. Over the course of my career, I have worked at a variety of medical device companies ranging from small start-ups, to large mature companies, and have been involved with numerous technologies relating to a multitude of anatomical regions (1977 to present).

6. I received a B.S. in the Electrical Engineering program from the University of Connecticut (1975) where I specialized in biomedical engineering principles. As an undergraduate, I worked in a metallurgy research lab on campus as a lab technician, in a United States Army research facility in Washington, D.C.,

on high-current pulsing of semiconductor devices, and in an on campus biobehavioral sciences research lab testing and repairing capacitive-based respiration monitors. Additionally, I did an independent study lab on using miniature electrodes to measure nerve signals of insects.

7. I received my M.S. in Biomedical Engineering from Boston University in Boston, MA on a part-time basis (1980). I took courses including biomaterials, human anatomy, and electrical signal analysis. My thesis topic was measurement and analysis of electromyography signals (EMGs). EMGs are physiological signals produced by the body to cause muscles to contract. EMG signals are similar to ECG signals, except that ECG signals are produced specifically by the heart muscle. The electrodes for this EMG medical device were dry (pasteless) surface electrodes and they interfaced with a biometric device that I designed.

8. I studied towards my Ph.D. in Electrical Engineering at the University of Connecticut with an anticipated thesis topic in medical ultrasound imaging (1980-81). I took courses in digital image processing and taught classes to junior-level electrical engineering undergraduate students in electrical signals and systems analysis. At the end of my first year, my academic advisor started a two-year sabbatical to obtain his M.D. degree, and I therefore decided not to continue my Ph.D. degree studies.

9. I earned an M.B.A. degree, specializing in management of technology enterprises, from Babson College in Wellesley, MA (2013). While doing so, I took a course entitled "Patents and Licensing in the Life Sciences" and learned about analysis and management of manufacturing costs and other issues facing technology companies.

10. I was a Biomedical Equipment Technician at New England Medical Center, a teaching hospital of Tufts University School of Medicine in Boston, MA (1977-78). Some of my responsibilities included performing scheduled maintenance and calibration of medical equipment including electrocardiogram (ECG) and respiratory monitoring equipment. I also responded to and resolved problems with equipment, including issues with ECG surface electrodes and respiration impedance electrodes, in use on patients in wards, ICUs, and surgery.

11. I was a Research Engineer in a research lab at Children's Hospital Medical Center, a teaching hospital of Harvard Medical School in Boston, MA (1978-80). My manager was an adjunct professor at Boston University and my lab project overlapped considerably with my M.S. thesis project discussed above, involving measurement and analysis of EMG signals using dry (pasteless) surface electrodes and designing a biomedical measuring device. At this time, I was also an advisor to a group of Boston University undergraduate students working towards their B.S. degrees in Biomedical Engineering.

12. I was an Electrical Engineer for Corning Medical & Scientific in Medfield, MA (1981-83) where I worked on systems for spectrophotometric-based blood analysis of hemoglobin. I helped designed an ultrasonic driver and power supply used within the system that could accommodate varying worldwide voltages and frequencies.

13. I was a Design Engineer for Zoll Medical Instrument Corp. in Cambridge, MA (1987) where I designed and tested a single package application-specific integrated circuit (ASIC) for a portable ECG/external pacemaker instrument. Additionally, I designed analog drive circuitry for magnetic deflection of a CRT display.

14. I was a Project Engineer developing various medical devices based on microwave energy and sensing techniques at Microwave Medical Systems, a start-up company in Acton, MA (1988-92, 1996-97). As part of my responsibilities, I selected several connectors, with some containing alignment keys, for use with those medical devices. Additionally, I worked with a vacuum mold forming company to fabricate the plastic housing of a medical device.

15. I worked at Boston Scientific, a large and successful medical device company in Natick, MA, as a Sr. Biomedical/Electrical Engineer and Program Manager (1992-96, 2005-06). In this role (1992-96), I led a multidisciplinary team to develop a catheter for diagnosing and treating cardiac arrhythmias that was

eventually released to the market. This catheter contained electrodes for measuring the ECG from within the heart. I explored printing conductive ink on an insulating substrate to reduce manufacturing costs.

16. I was a technical Program Manager at Aurora Imaging Corp. (no longer in business), a start-up company (1997-98, 2000-03). In this role, I was the technical and clinical lead for a breast biopsy system for use on an Aurora MRI machine dedicated to breast imaging that was eventually released to the market. I was also a co-inventor on a patent (US Pat. No. 7,171,256) relating to this device.

17. I was a technical Project Manager at Smith + Nephew (Endoscopy Division) in Andover, MA (1998-2000). In this role, I was the technical lead for an arthroscopic surgery device (used in joints such as shoulders and knees), which was eventually released to the market. The device included ceramic materials.

18. I am a co-inventor of two U.S. patents and one pending U.S. patent application: (a) U.S. Patent No. 7,171,256, directed toward breast magnetic imaging systems; (b) U.S. Patent No. 5,833,688, directed toward sensing temperature with a plurality of catheter sensors; and (c) U.S. Patent Appl. No. 20040030330, directed toward electrosurgery systems.

19. I am a member of Eta Kappa Nu ("HKN") Electrical Engineering honor society, and the Institute of Electrical and Electronic Engineers ("IEEE") subgroup Biomedical Engineering. I have been a member of the Medical Development Group

("MDG") and actively advise medical device start-up companies in Massachusetts Medical Device Development ("M2D2") center accelerator programs.

20. I am qualified to render an opinion regarding the design and development of electronic devices for monitoring or sensing biological parameters. Based on my expertise and qualifications, I am qualified to provide an opinion as to what a person of ordinary skill in the art would have understood, known, or concluded as of November 2008.

21. A copy of my curriculum vitae, attached as Exhibit 1004, contains further details concerning my education, experience, publications, patents, and other qualifications to render an expert opinion in this matter.

III. INFORMATION AND MATERIALS CONSIDERED

22. I have considered the following list of materials in formulating my opinions in this matter:

Exhibit No.	Description
1001	U.S. Patent No. 10,076,257 ("the '257 patent")
1002	File history of the '257 patent
1005	U.S. Pat. Pub. No. 2007/0021677, published January 25, 2007 ("Markel")

Exhibit No.	Description
1006	U.S. Pat. No. 5,351,695, issued Oct. 4, 1994 ("Mills")
1007	Reserved
1008	Leslie Cromwell et al., Biomedical Instrumentation and Measurements (1973)
1009	Reserved
1010	Reserved
1011	Reserved
1012	US Pat. Pub. No. 2008/015063
1013	US Pat. Pub. No. 2005/0033284
1014	*ABS Plastic Properties*, ADECRO PLASTICS (last visited March 13, 2023), www.adrecoplastics.co.uk/abs-plastic-properties/#:~:text=Finally%2C%20ABS%20has%20low%20heat,absorb%20shock%20effectively%20and%20reliably
1015	Carl R. Nave, *Conductors and Insulators*, HYPERPHYSICS (last visited March 13, 2023), http://hyperphysics.phy-astr.gsu.edu/hbase/electric/conins.html#c1
1016	Merriam-Webster's Collegiate Dictionary (11th ed. 2004)

Exhibit No.	Description
1017	Random House Unabridged Dictionary (2nd ed. 1993)
1018	The American Heritage Dictionary of the English Language (4th ed. 2000)
1019	Steven M. Kaplan, Wiley Electrical and Electronics Engineering Dictionary (2004)
1020	Stedman's Medical Dictionary (28th ed. 2006)

23. In addition to references specifically cited by Petitioner in the Petition, I have also reviewed all other documents and exhibits cited in my declaration, to the extent they are not listed above.

IV. RELEVANT LEGAL STANDARDS

24. I am not a lawyer. Therefore, in formulating my opinions and conclusions in this proceeding, I have been provided with an understanding of the relevant aspects of U.S. patent law that govern the issues of patent validity.

A. Prior Art

25. I understand that, in this IPR proceeding, the prior art to the '257 patent includes patents and printed publications in the relevant field(s) that predate the '257 patent's priority date.

A. Anticipation

26. I have been informed that a person cannot obtain a patent on an invention if someone else had already made the same invention. I understand that 35 U.S.C. § 102 is the statute that governs the determination of anticipation. I understand that under 35 U.S.C. § 102, a prior art reference anticipates a claim if each and every element of a claim is found, either expressly or inherently, within the single prior art reference. I understand that a reference anticipates a claim if all elements of the claim are disclosed within the four corners of the reference in the same arrangement as in the claim.

B. Obviousness

27. I understand that a claim of a patent may be obvious to a person of ordinary skill in the art if the differences between the subject matter set forth in the patent claim and the prior art are such that the claimed subject matter as a whole would have been obvious at the time of the invention.

28. I understand that obviousness is a determination of law based on various underlying determinations of fact. In particular, these underlying factual determinations include (1) the scope and content of the prior art; (2) the level of ordinary skill in the art at the time the claimed invention was made; (3) the differences between the claimed invention and the prior art; and (4) the extent of any proffered objective "indicia" of non-obviousness. I understand that the objective

indicia, also known as secondary considerations, which may be considered in such an analysis include, among other factors: the commercial success of the patented invention (including evidence of industry recognition or awards), the existence of a long-felt but unmet need in the field satisfied by the invention, the failure of others to arrive at the invention, industry acquiescence and recognition of the invention, initial skepticism of the invention by others in the field, the extent to which the inventors proceeded in a direction contrary to the accepted wisdom of those of ordinary skill in the art, and licensing of the patent.

29. In determining the scope and content of the prior art, I understand a reference is considered prior art for the obviousness analysis if it falls within the inventors' field of endeavor. Additionally, a reference is prior art for the obviousness analysis, even if from a different field of endeavor, if it is reasonably pertinent to the particular problem for which the invention was made. A reference is reasonably pertinent if it is something a person of ordinary skill in the art would have looked to when attempting to solve the problem.

30. While multiple prior art references or elements may be combined to render a patent claim obvious, I understand that a patent claim composed of several elements is not proven obvious merely by demonstrating that each of its elements was, independently, known in the prior art. I understand that I should consider whether there is an "apparent reason" or motivation to combine the prior art

references or elements in the way the patent claims. It is my further understanding that the law recognizes several rationales for combining references or modifying a reference to show obviousness of claimed subject matter. Some of these rationales include: combining prior art elements according to known methods to yield predictable results; simple substitution of one known element for another to obtain predictable results; a predictable use of prior art elements according to their established functions; applying a known technique to a known method or product ready for improvement; and choosing from a finite number of identified, predictable solutions, with a reasonable expectation of success.

B. Claim Construction

31. I have been informed the first step of a validity analysis is to construe the claims. I have been informed that the Patent Trial and Appeal Board construes the claims by giving the claim terms their ordinary and customary meaning, as they would have been understood by a person of ordinary skill in the art ("POSITA") at the time of the invention in view of the intrinsic record (patent specification and file history). For the purposes of this review, and to the extent necessary, I have interpreted each claim term in accordance with its plain and ordinary meaning as it would have been understood by a POSITA at the time of the invention, in view of the intrinsic record.

32. It is my understanding that an inventor may expressly define certain terms used in a patent, and therefore may give a term a meaning that differs from the term's plain and ordinary meaning. However, I do not believe that the inventors defined any claim terms whose construction is necessary for my analysis in a manner inconsistent with their plain and ordinary meanings in view of the intrinsic record.

33. I have been informed that, under 35 U.S.C. § 112(f), claim limitations written in "means-plus-function" format must be construed as follows: (1) the function specified in the claim, and the structure corresponding to the claimed function, must be identified, (2) to be corresponding structure, the specification must clearly link the structure with performance of the claimed function and the structure must actually be able to perform the claimed function, and (3) once corresponding structure is identified, the claim limitation is construed to cover the corresponding structure and equivalent structures. However, I do not believe that any claim terms whose construction is necessary for my analysis is written in "means-plus-function" format.

C. Perspective of a Person of Ordinary Skill in the Art at the Time of the Claimed Invention

34. I have been informed that claim construction and patent validity is generally analyzed from the perspective of a hypothetical person of ordinary skill in the art of the invention ("POSITA") as of the effective filing date. I have assumed

for purposes of my analysis that the effective filing date, also referred to herein as the "relevant time," is November 5, 2008.

35. I have performed my analyses, and expressed my opinions, from the perspective of the POSITA (as further described below) at the relevant time.

D. Prior-Art Status of References

36. I understand that the patent statute defines the requirements for a reference to be considered prior art to the '257 patent. However, while I understand the references I have analyzed were published before November 5, 2008, I have not been asked to assess their prior-art status. Rather, I have assumed, for purposes of my analysis, that the references are prior art to the '257 patent.

V. LEVEL OF ORDINARY SKILL IN THE ART

37. I understand that my opinion must be taken from the perspective of what would have been known or understood by a person of ordinary skill in the art at the time of the invention. I have been informed by counsel and it is my understanding that the '257 Patent claims priority to a provisional application filed on November 5, 2008. I understand that date to be the time of the invention for my analysis. I have been informed that the level of ordinary skill in the art may be determined by various factors including: (a) the type of problems encountered in the art, (b) prior art solutions to those problems, (c) the rapidity with which innovations

are made, (d) the sophistication of the technology, and (e) the educational level of active workers in the field.

38. A POSITA of the '257 patent would have had a B.S. degree in electrical engineering or biomedical engineering or a related field, with at least two years of experience designing patient monitoring systems. A higher level of education may compensate for less work experience and vice versa. My opinions concerning the unpatentability of the '257 patent claims, as set forth herein, are from the perspective of a person of ordinary skill in the art, as set forth above.

VI. THE '257 PATENT

A. Overview of '257 Patent

39. The '257 patent is directed to an electronic device, such as a mobile phone, that includes "a heart sensor having several leads for detecting a user's cardiac signals." EX1001, Abstract. Fig. 3[1] (reproduced in part below with annotations) depicts a mobile phone 300 including a bezel 310.

[1] All reproduced figures herein are annotated unless otherwise stated.

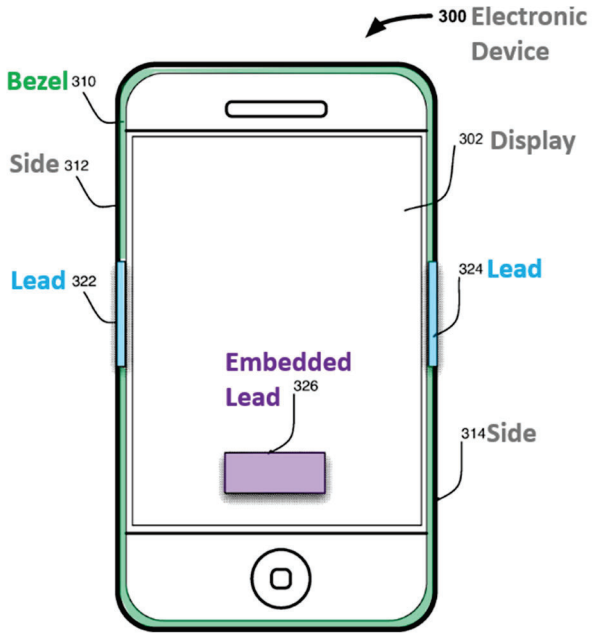

FIG. 3

40. The '257 patent touts the improvement of the aesthetic qualities of the electronic device with respect to the positioning of the leads. The '257 patent explains this improvement is because the approach of prior art devices placing "the leads … on the exterior surface" of the housing (or enclosure) of the electronic device "is not aesthetically pleasing." *Id.*, 1:58-63.

41. Fig. 4B illustrates the lead 472 can be positioned against the back surface of bezel 460 or alternatively "placed in the thickness of bezel 460 (e.g., in a pocket within the bezel wall), but underneath the outer surface of the bezel" where the bezel is part of electronic device 450. EX1001, 9:46-48. According to the '257 patent, the "short thickness of the bezel can allow electrical signals to propagate from the user to the outer surface of the bezel, through the bezel, and into the lead."

Id., 9:48-51. In turn, the lead "transmits the signals to a processor." *Id.*, 9:51-52. The '257 patent explains that this results in an "electronic device [450] having a bezel [460] with an embedded heart sensor lead [472]." *Id.*, 3:30-33.

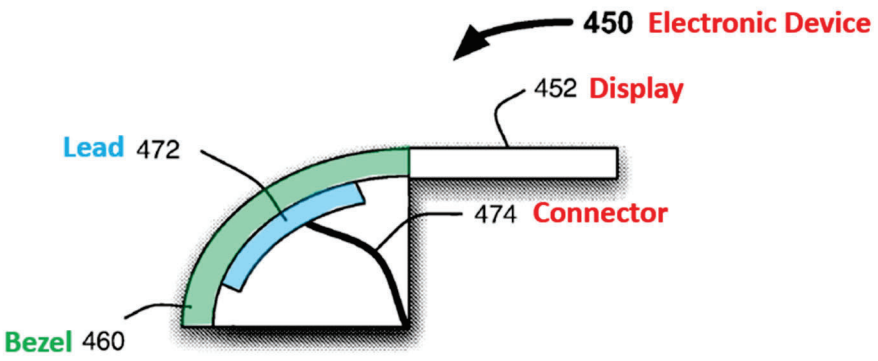

FIG. 4B

B. Prosecution History of the '257 Patent

42. The examiner rejected the claims several times before allowing them after Patent Owner made several narrowing amendments to the independent claims. Specifically, Patent Owner added the limitation of an embedded "pad" to claim 1 and the limitation of an electrode embedded in a "display" for Claim 15.

VII. CLAIM CONSTRUCTION

1. Embedded

43. I assessed the meaning of the term "embedded" which is recited in independent claims 1, 9 and 15. More specifically, claim 1 recites "embedded" first and second pads of respective first and second leads. Dependent Claim 9 recites a

third lead "embedded" within a display. Independent Claim 15 recites "embedded" first and second leads. After thoroughly reviewing the '257 patent, I have concluded that the '257 patent does not provide a definition of "embedded." As such, to construe these claim terms, I have used the claim language itself, the specification as well as reviewed dictionary definitions to produce a proper definition for "embedded" as would be understood by a POSITA reviewing the '257 patent.

44. The '275 patent discloses two examples of leads 422, 472 "embedded" into portions of the housing or enclosure 410, 460. EX1001, 9:19-20, 9:37-38. Fig. 4A shows embedded lead 422 "along the outer surface of the bezel 410" and "exposed to the user during use." *Id.*, 9:22-24. In contrast, Fig. 4B shows embedded lead 472 "positioned against the back surface of the bezel 460" *Id.*, 9:44-45.

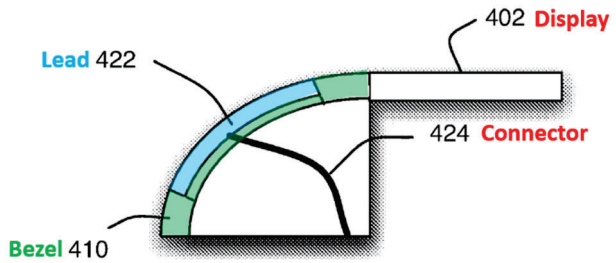

FIG. 4A

"[A] bezel with an embedded heart sensor lead" Ex. 1001 at 9:19-20.

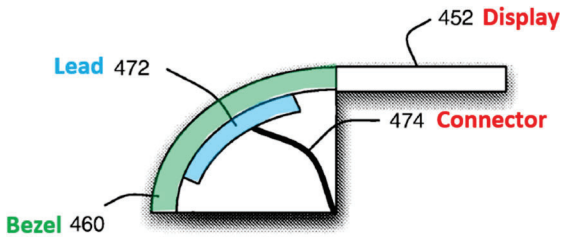

FIG. 4B

"[A]another ... bezel with an embedded heart sensor lead" Ex. 1001 at 9:37-38.

The '257 patent also explains that a lead can be embedded if it is "placed within the thickness of bezel . . . but underneath the outer surface of the bezel." EX1001, 9:45-48.

45. Appropriate dictionary meanings for embedded as used in the '257 patent include "to make something an integral part of" (EX1016, 406); "to be or become fixed or incorporated, as into a surrounding mass" (EX1017, 635); "to cause to be an integral part of a surrounding whole" (EX1018, 583).

46. Accordingly, a POSITA would understand at the time of the '257 patent disclosure that the ordinary and customary meaning of "**embedded**" means "*an integral part of*" such as, by "*being placed in the thickness of a surrounding material including forming an outer and/or inner surface*" or "*placed underneath an exterior surface and against an inner surface*."

2. Lead

47. I assessed the meaning of the term "lead" which is recited in independent Claims 1 and 15 and a number of dependent claims. A person of skill in the art (POSITA) would have understood that a common definition of a lead is a "conductor, usually a wire, by which circuit elements or points are connected to components, devices, equipment, systems, points or materials. Also called a lead wire." (EX1019, 414). Another technical dictionary defines a lead as an "electrocardiographic cable with connections within the electronics of the machine designated for an electrode placed at a particular point on the body surface." (EX1020, 1062).

48. A POSITA would understand a common basic electrocardiogram (ECG)[2] system to include a number of "leads" typically formed from an "electrode" in contact with the user's skin (sometimes referred to as a "pad") and may include a "lead wire", one or more connectors, and other components to electrically couple a body electrical signal at the electrode to processing circuitry. For example, a typical ECG lead can be graphically illustrated as follows:

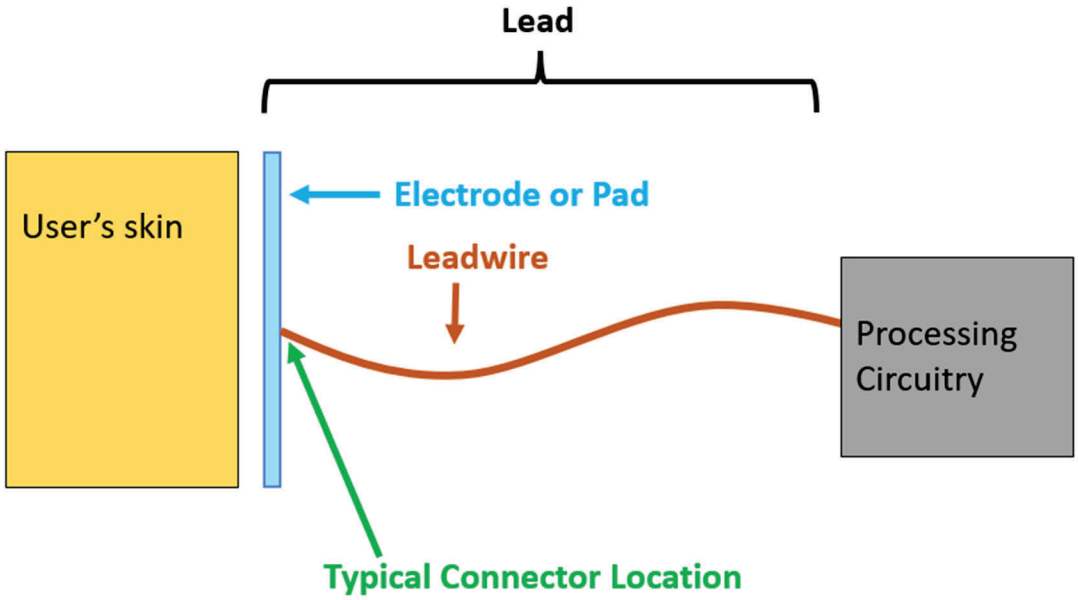

Electric potentials measured by each lead are compared to other leads to determine a voltage (*e.g.*, a difference between two electrical potentials). The measured voltage is the ECG signal.

[2] Electrocardiogram is commonly abbreviated as either ECG or EKG. EX1008, 31.

49. The ’257 describes an electronic device with a sensor such that “electrical signals generated by the user can be transmitted from the user's skin through the electronic device housing to the leads.” EX1001, Abstract. Accordingly, this device is a type of electrocardiogram (ECG). In the context of an ECG system, an “electrode” is a well-known term of art that a POSITA understands to mean a structure, such as a pad, that contacts the user’s skin to detect the user’s ECG.

50. The ‘257 patent does not explicitly use the commonly applied term “electrode” in the field of ECG, but does describe a structure a POSITA would understand to mean an electrode, including a “pad.” EX1001, 6:28-33. For example, the ‘257 patent explains: “to detect a user's heartbeat or heart rhythm, however, the electronic device must provide at least two leads that the user contacts to detect the user's cardiac signals” and “contact is made between the user (e.g., the user's hand or finger) and the leads for cardiac signals to be detected.” EX1001, 1:56-58, 6:27-28.

51. The ’257 patent states that to “provide an electrical signal from the user to the processing circuitry, the leads can be exposed such that the user may directly contact the leads, or may instead or in addition be coupled to an electrically conductive portion of the device enclosure (*e.g.*, a metallic bezel or housing forming the exterior of the device).” EX1001, 2:44-50. Consistent with its ordinary meaning

as shown in dictionary definitions and based on the claims and disclosure of the '257 patent, a POSITA would understand a "**lead"** in context of the '257 patent to mean "*one or more conductive components that form at least a part of an electrical path from the user's skin to the processor*."

3. Pad

52. I assessed the meaning of the term "pad" which is recited in independent Claim 1 and a number of its dependent claims. The '257 patent states that a "lead can include a pad … placed on the outer or inner surface of an electronic device bezel or housing [which] can then be coupled to a wire or other connector for providing cardiac signals to a processor for processing." EX1001, 6:28-33. An electrode is often a conductive pad. The dictionary meaning of pad is "a thin flat mat or cushion." EX1016, 890. The '257 patent states a "pad" as "an extended area placed on the outer or inner surface of an electronic device bezel or housing" and which can then be "coupled to a wire or other connector for providing cardiac signals to a processor for processing." EX1001, 6:29-33. Consistent with its ordinary meaning to a POSITA, a "**pad**" in the context of the '257 patent means "*a thin mat that may be part of the electrical path of a lead, such as an electrode or a connection that is part of the lead*."

4. Pocket

53. I assessed the meaning of the term "pocket" which is recited in dependent Claim 8. The '257 patent specification does not define the term pocket nor are there any drawings that illustrate what is meant by a pocket. Consistent with its ordinary dictionary definition, a POSITA would define a pocket to mean "any pouchlike receptacle, compartment, hollow or cavity." EX1017, 1491-92. I have applied this dictionary definition that is consistent with how a POSITA would understand the term pocket in the context of the '257 patent disclosure.

VIII. OVERVIEW OF THE PRIOR ART

A. Mills

54. Mills discloses a "cardiac and data event monitor having dry skin electrodes integral with the monitor's housing." EX1006, Abstract. As shown in Fig. 1 (reproduced with annotations below), a wrist-worn ECG monitor 10 includes a first electrode 14 incorporated within housing 12 and a second electrode 16. According to Mills, an "object [of the invention] is to provide such a monitor that reliably detects and records ECG signals without the use of external electrodes or messy gels…" EX1006, 1:39-42. Mills also states that "an object of the invention [is] to provide an improved dry skin electrode system that is an integral part of the housing of such a monitor. *Id.*, 1:43-45.

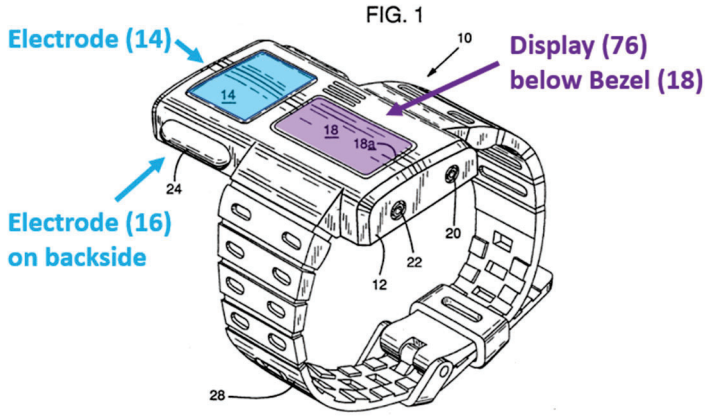

B. Markel

55. Markel discloses a device that comprises one or more electrodes that are "adapted to detect cardiac activity of a user" of the device. EX1005, [0035]. As shown in Fig. 4 below, a mobile communication device 400 includes electrodes placed on or molded into regions 410b, 420b, that are "substantially concealed (or hidden) from a user." EX1005, [0039], [0040], [0045]. Markel further goes on to provide an example by disclosing that "an electrode may comprise molded conductive plastic with little or no visible indication of the electrode presence." *Id.*, [0040].

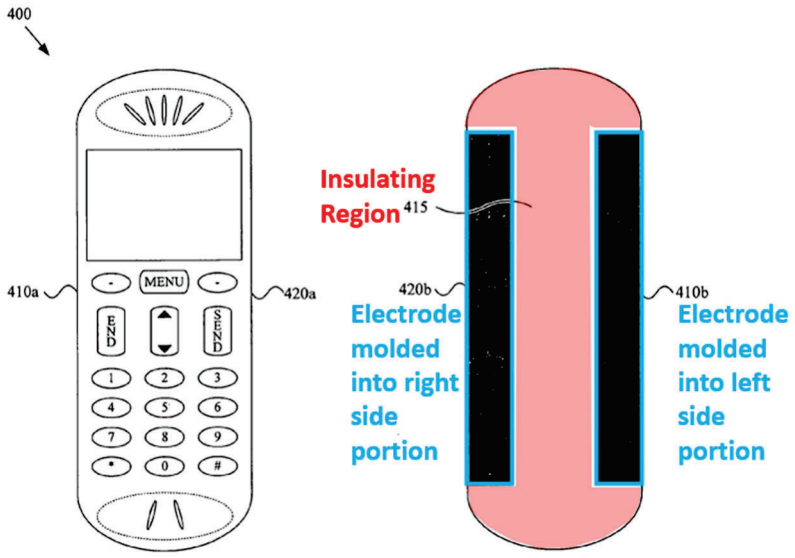

Figure 4

IX. GROUNDS FOR UNPATENTABILITY

A. Ground 1: Claims 1-4, 8, 10, 11 and 14 are unpatentable as anticipated by Mills

1. Claim 1: "An electronic device for detecting a user's cardiac signal, comprising"

56. Mills teaches a "wrist-worn cardiac data and event monitor having dry skin electrodes integral with the monitor's housing." EX1006, Abstract.

a. Limitation 1[a]: "an enclosure"

57. As shown below in Fig. 1 of Mills, Mills discloses an electronic device 10 for detecting a user's cardiac signal. EX1006, Fig. 1 (reproduced in part, below), 3:7-8. The device 10 includes a housing or enclosure 12. *Id.*

FIG. 1

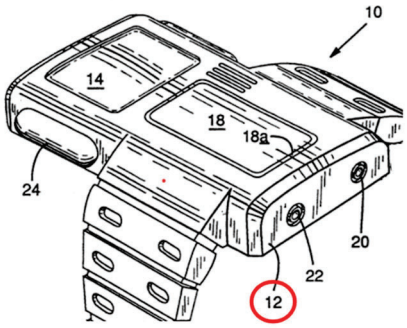

b. Limitation 1[b]: "a heart sensor configured to detect the user's cardiac signal, the heart sensor comprising

58. Mills discloses a "wrist-worn cardiac monitor" (i.e., a heart sensor) that "reliably detects and records ECG signals" (i.e., cardiac signals). EX1006, Abstract, 1:11-12, 1:39-40.

c. Limitation 1[b(i)-(v)]: "a first lead comprising a first pad that is embedded in a first portion of the enclosure, wherein an exterior surface of the enclosure comprises an exterior surface of the first portion, wherein the first pad is positioned underneath the exterior surface of the first portion, and wherein the first pad is configured to detect a first electrical signal of the user's cardiac signal via the user's skin's contact with the exterior surface of the first portion of the enclosure"

59. The heart sensor of Mills comprises two pads (electrodes) designated 14 and 16, as annotated in Fig. 3A below. For the following discussion, I note that Mills equates the term electrode with a pad: "*electrode* **14** comprising such plated expanse obviates use of a messy, conductive gel, and even the so-called "residue-free' self-adhesive gelatinous *pads* that often are used to enhance conductivity between an electrode and a patient's skin." EX1006, 4:19-24. For future reference,

I associate the first pad/electrode 14 with the first lead of the claim and the second pad/electrode 16 with second lead of the claims. The '257 patent states that a "lead can include a pad or extended area placed on the outer … surface of an electronic device … housing" and which can then be "coupled to a wire or other connector for providing cardiac signals to a processor for processing." EX1006, 6:29-33. Electrodes 14 and 16 are both on the outer surface of the device housing and therefore are the pads described in the '257 patent. Fig. 1 of Mills shows a first pad 14 "integrally molded" (*i.e.*, embedded) into the housing. EX1006, Fig. 1; 3:48-49. Also, Mills discloses that the heart sensor "comprises a housing **12** including first and second dry skin electrodes **14, 16** unitarily connected therewith and forming an integral part thereof." EX1006, 3:8-11. Mills refers to electrode 14 as the "upper electrode" and electrode 16 as the "lower electrode." EX1006, 4:65-67. Fig. 3A of Mills, shown with annotations below, depicts that these electrodes, 14 and 16, are located on different portions of the enclosure, which may be referred to as an upper portion and a lower portion, respectively.

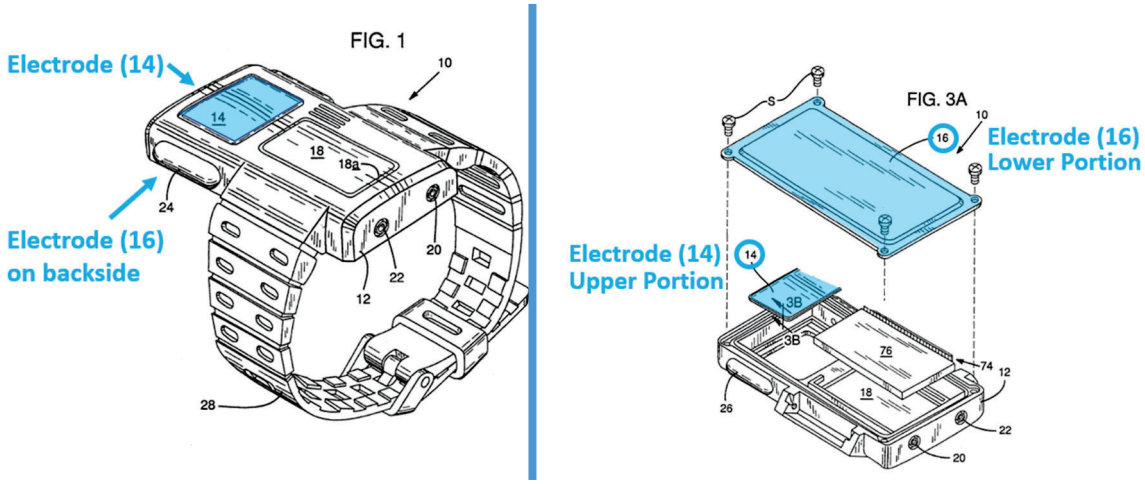

Fig. 3B of Mills, shown with annotations below, depicts a cross-section of "an electrode such as electrode 14." EX1006, 3:67-68. The construction shown consists of a base metal **14a** on an inner surface and "[p]lating of an outer, skin-contactable region or surface **14a'**." EX1006, 4:4-5. Thus, the pad (base metal 14a) is positioned underneath the exterior of the first portion. Additionally, this construction is similar to the construction shown in Fig. 4B of the '257 patent. In both Mills and the '257 patent the construction techniques were motivated by aesthetic reasons. EX1006, 4:35-39; EX1001, Abstract.

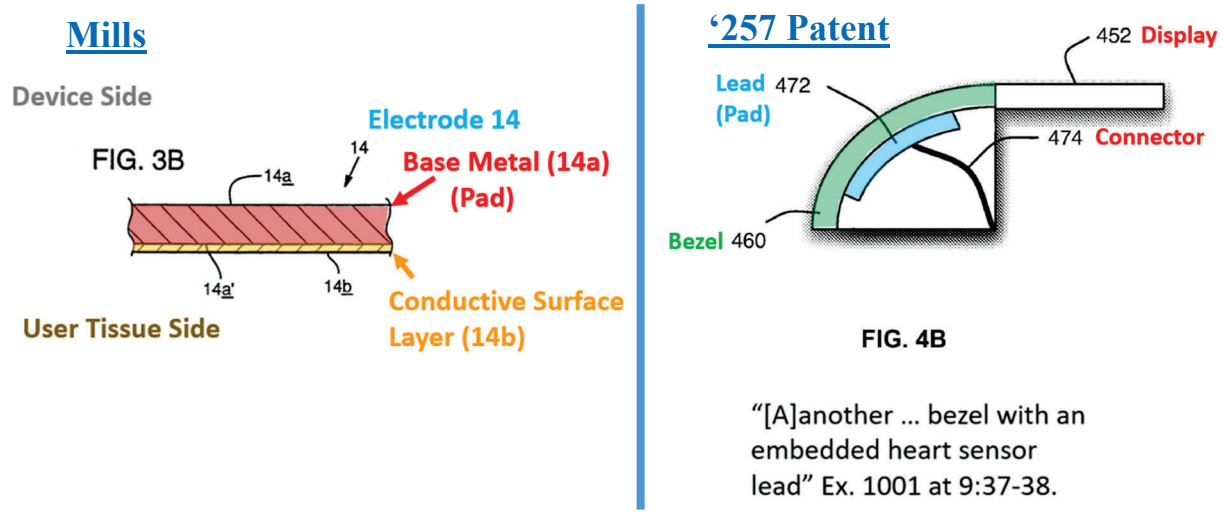

Mills states that "14a [is] electrically connectable with such monitoring equipment." EX1006, 4:2-3. Mills states that "such plating [exterior surface] also has been found to provide high conductivity and thus to produce a high-quality electrical interface between an electrode such as electrode 14 and the patient's skin surface, which may be very dry." EX1006, 4:43-47. Thus, Mills teaches and a POSITA would understand that this first pad, part of electrode 14, is configured to detect an electrical cardiac signal via the user's skin's contact with the exterior surface of the first portion of the enclosure. "Dry skin electrodes 14, 16 are designed for use with equipment capable of producing or monitoring changing electrical conditions (indicative of changing cardiographic conditions) at the surface of a patient's skin, and are particularly suitable in cardiac monitoring, e.g. by apparatus 10 [wrist-worn cardiac data monitor]." EX1006, 3:62-67.

60. In addition to the above described ways in which Mills meets the limitation of this Claim 1, Mills further discloses electrode 14 is physically

connected to processing circuitry by a leaf spring 62 as shown in Fig. 2 (reproduced below with annotations). *Id.*, 4:67-5:3; *See also Id.*, 4:1-3.

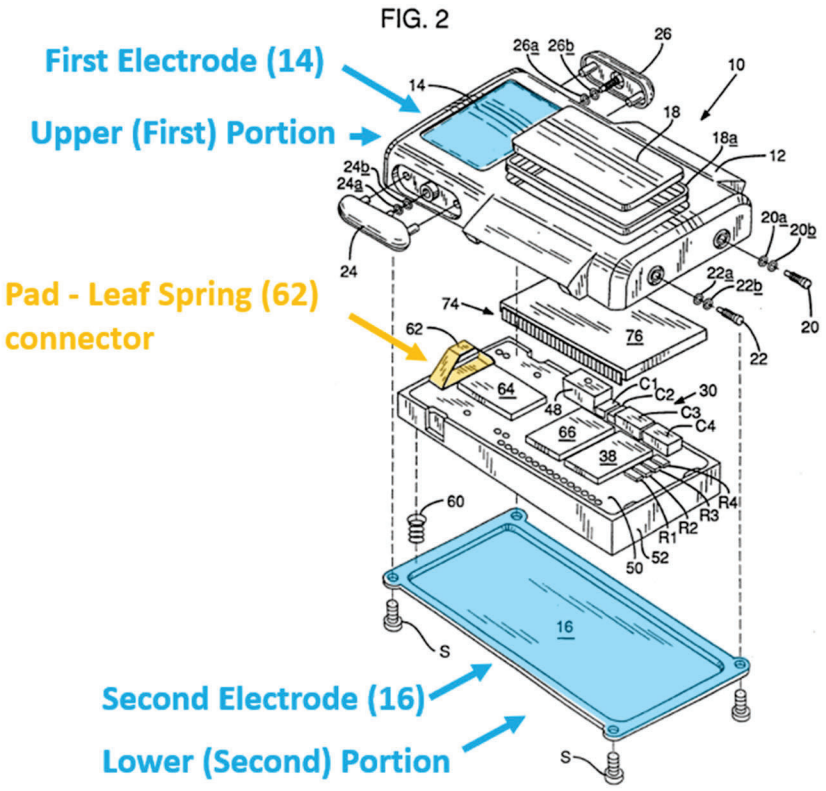

Mills teaches that "electrode 14 is connected to the … signal input terminal of ECG amplifier 32 via a generally trapezoid-shaped, split and thus slidably yielding, leaf spring 62 connected to a circuit pad formed on the top side of PCB 50." EX1006, 4:67-5:3. The top of the trapezoid-shaped leaf spring 62 is also a pad.

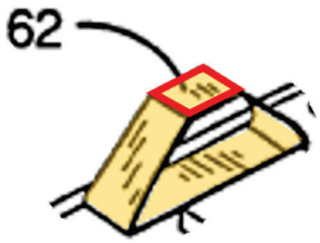

This pad is pressed against the inner wall of electrode 14 in Mills and surrounded by the housing 12 of Mills and is therefore embedded in the device of Mills. The pad of leaf spring 62 is positioned underneath the electrodes/first portion 410b exterior surface of Markel. EX1006, Fig. 2. A POSITA would understand from this disclosure that leaf spring 62 is a pad that is embedded in the enclosure of device of Mills. The pad is underneath the exterior surface and the pad is configured to detect an ECG signal of the user via its contact with electrode 14 located on the exterior surface.

i. Limitation 1[b(vi)-(viii)]: "a second lead comprises a second pad that is embedded in a second portion of the enclosure, wherein the second pad is configured to detect a second electrical signal of the user's cardiac signal via the user's skin's contact with at least one of the second pad and the second portion of the enclosure"

61. This limitation for a second lead is similar to the limitation for the first lead discussed in the above section. Electrode 16 in Fig. 3A of Mills is a second pad that is embedded in a second, lower portion of the device. EX1006, Fig. 3A. As above, Mills teaches and a POSITA would understand that this second pad, electrode 16, is configured to detect an electrical cardiac signal via the user's skin's contact with the exterior surface of the second portion of the enclosure. Electrode 16 of Mills (Fig. 2 reproduced below with annotations) is a second pad and coil spring 60 is a leadwire. Electrode 16 and coil spring 60 form part of a second lead. As above,

Mills teaches and a POSITA would understand that this second pad, electrode 16, is configured to detect an electrical cardiac signal via the user's skin's contact with the exterior surface of the second portion of the enclosure and communicate that electrical cardiac signal through coil spring 62 to a processing arrangement discussed below. EX1006, 3:47-51, 4:64-66.

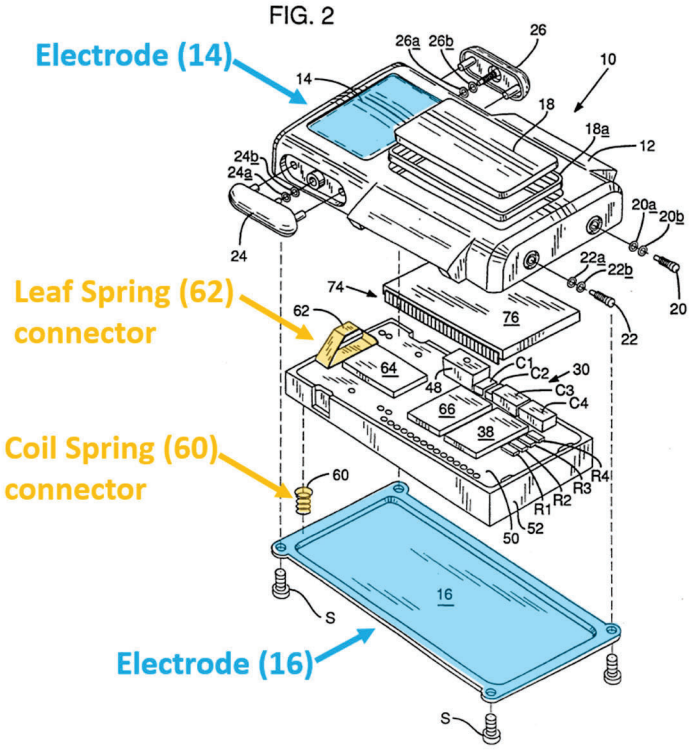

62. Electrode 16 of Mills is embedded in housing 12 because it is placed in the thickness of a surrounding material and forms an outer surface. Fig. 3A of Mills shows the electrode 16 attached by screws and is integral with housing 12. EX1006, 1:12-13, 3:47-51, Fig 3A. Electrode 16 is embedded into the housing 12 because a portion of electrode 16 is inset (placed in the thickness) into a groove (surrounding

material) of housing 12 and forms an outer surface. *Id.* As shown, the electrode 16 is shaped to fit within the hollowed inset groove. *Id.*

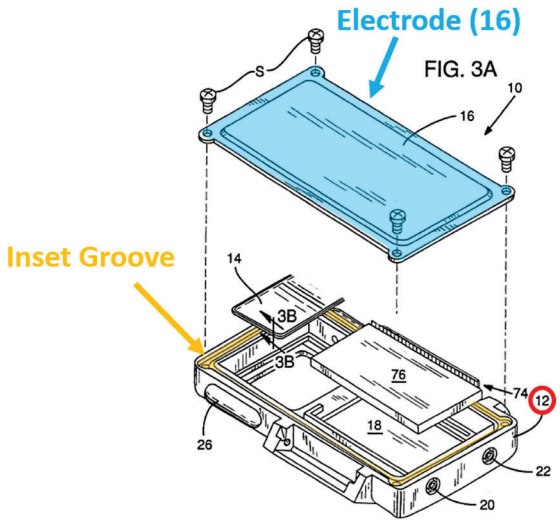

Comparing this inset groove of Mills to the '257 patent's disclosure in Fig. 4A, the resulting embedded nature of electrode 16 of Mills inserted into the inset groove of its housing is nearly identical to the embedded nature of the electrode (lead 422) of Fig. 4A of the '257 patent:

Mills Fig. 3A

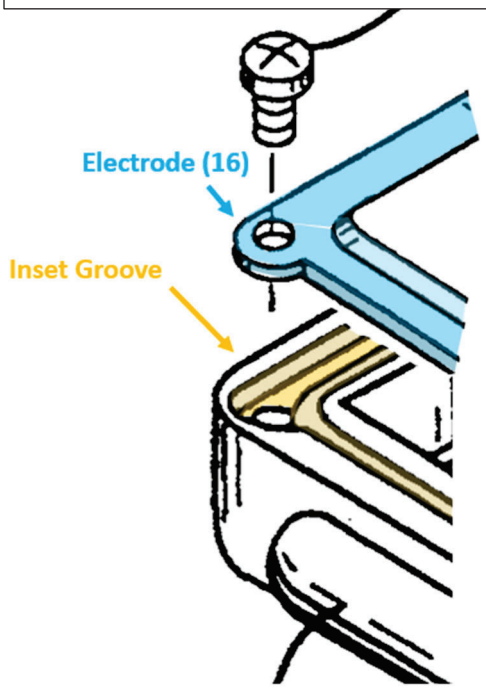

'257 Fig. 4A

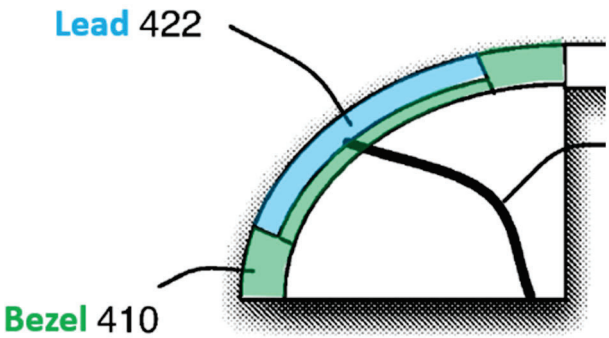

63. Additionally, Mills' second electrode 16 includes identical material content and cross-sectional structure as the first lead 14 discussed above. EX1006, 4:10-13. Thus, as illustrated in Fig. 3B (below with annotations), electrode 16 includes a base metal portion 14a, which is a pad embedded under conductive surface layer 14b because it is underneath an exterior surface and against an inner surface. *Id.*, Fig. 3B.

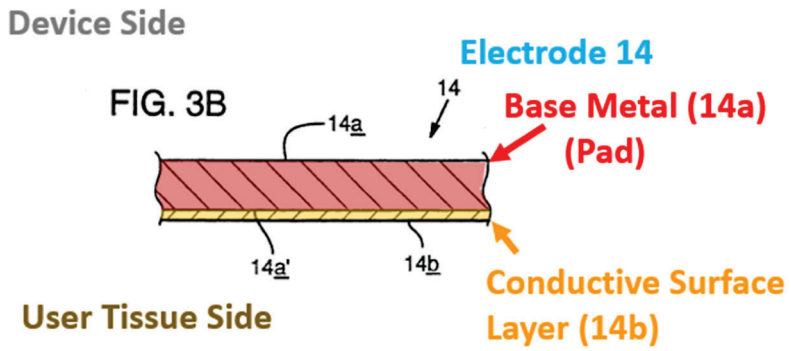

A POSITA would understand from the above disclosure that electrode 16 with its base metal pad 14a is embedded into the housing 12 with exposed outer conductive surface 14b forming an exterior surface. *Id.*, Fig. 3A.

64. Mills discloses that when the cardiac data apparatus 10 is positioned on the left wrist, the electrode 16 is in contact with the user's skin of the left wrist thus providing an electrical signal representative of the patient's cardiography. EX1006, 6:63-7:1. Mills further discloses "Dry skin electrodes 14, 16 are designed for use with equipment capable of producing or monitoring changing electrical conditions (indicative of changing cardiographic conditions) at the surface of a patient's skin, and are particularly suitable in cardiac monitoring, e.g. by apparatus 10." EX1006, 3:62-67.

d. Limitation 1[c]: "a processor coupled to the heart sensor and configured to receive and process the detected cardiac signal, wherein the first lead further comprises a first connector coupled to the first pad and configured to provide the first electrical signal detected by the first pad to the processor, and wherein the second lead further comprises a second connector coupled to the second pad and configured

to provide the second electrical signal detected by the second pad to the processor."

65. Mills discloses that the housing 12 comprises a very-large scale integrated (VLSI) circuit chip that includes an "ECG signal and abnormal event detection circuitry, analog-to-digital (AD) and digital-to-analog (DA) conversion circuitry, memory and processor circuitry." EX1006, 2:1-6. Mills also discloses that "The microprocessor and associated electronics, including firmware executed thereby, employs a digital bandpass filter reliably to detect ECG signals." EX1006, 2:20-23. Mills further specifies that the VLSI is surface-mounted on the top side of printed circuit board (PCB) 50. *Id.*, 5:18-19. Electrodes 14 and 16 are electrically connected to the PCB 50 via a respective spring (60/62). *Id.*, 4:55-5:3. Accordingly, the VLSI is a processor coupled to the heart sensor (first and second electrodes 14 and 16, respectively) and is configured to receive and process the detected cardiac signal. The '257 patent states that a "lead can include a pad or extended area placed on the outer … surface of an electronic device … housing" and which can then be "coupled to a wire or other connector for providing cardiac signals to a processor for processing." EX1001, 6:29-33. Electrodes 14 and 16 are both thin mats that are part of the electrical path of a lead and are therefore pads.

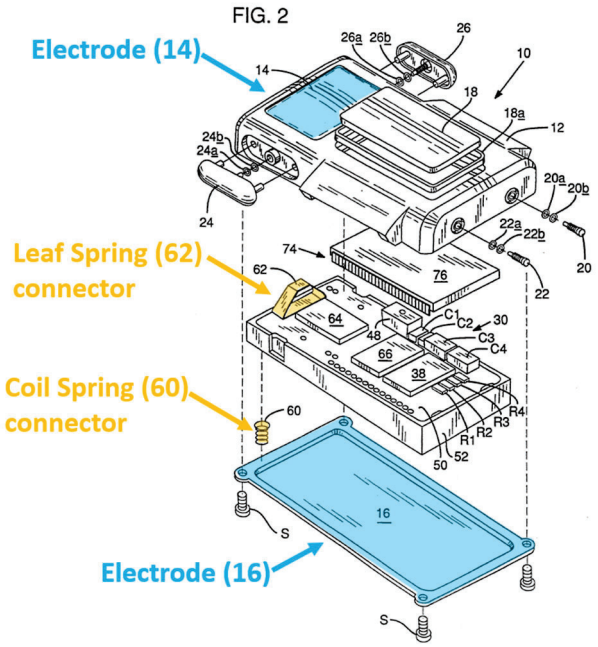

e. Claim 1 conclusion

66. For the reasons set forth above, I believe a POSITA would have understood that Mills teaches every limitation of Claim 1 of the '257 patent.

2. Claim 2: "wherein the first portion and the second portion are located on opposite sides of the electronic device"

67. Mills refers to electrode 14 as the "upper electrode" and electrode 16 as the "lower electrode." EX1006, 4:65-67. Fig. 2 of Mills, shown annotated below, depicts these electrodes, 14 and 16, located on different portions of the enclosure, which may be referred to as an upper portion and a lower portion, respectively. The upper or first portion of housing 12 has integrated electrode 14 on one side (top side) of the cardiac data apparatus 10 and the lower or second portion of the housing 12

has integrated electrode 16 on another side (bottom side) that is opposite of the side having the first portion. EX1005, Fig. 2.

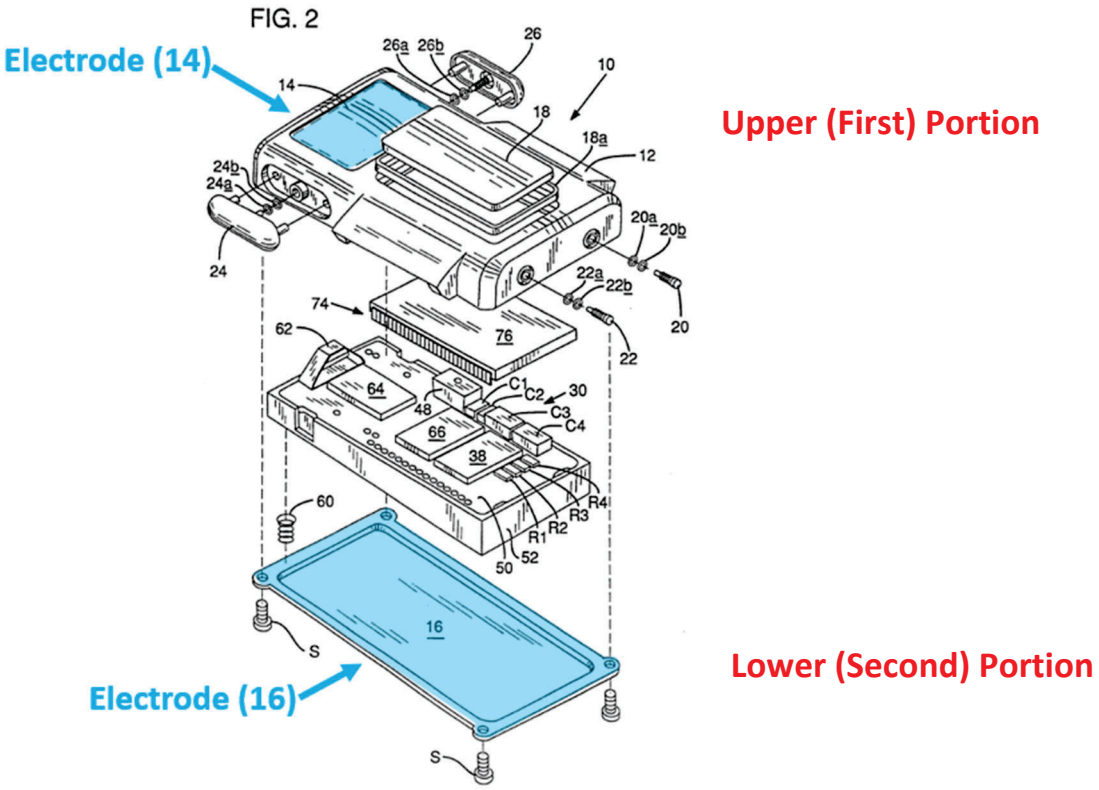

3. Claim 3: "wherein the first portion is electrically isolated from the second portion"

68. Mills discloses a housing 12 which separates its two electrodes 14, 15. EX1005, Fig. 2. Mills discloses its housing 12 may be molded plastic, such as acrylonitrile-butadiene-styrene (ABS). EX1006, 6:40-43. Plastics, in general, are well-known electrical insulators and ABS plastic is an electrical insulator. That ABS plastic is an electrical insulator is expressed in Patent Owner Apple's US Pat. Pub. No. 2008/0165063 (EX1012, [0090]), which states: "ABS plastic … or other suitable

dielectric." I note that a POSITA would understand a dielectric to be an electrical insulator. Similarly, US Pat. Pub. No. 2005/0033284 (EX1013, [0064], [0073]), also states that ABS plastic is an electrical insulator: "an insulating material, such as ABS plastic." Further, an industry website explains: "ABS is . . . helpful for products requiring electrical insulation protection." EX1014. These references are consistent with the understanding of a POSITA. Thus, Mills teaches that the first and second portions are electrically isolated.

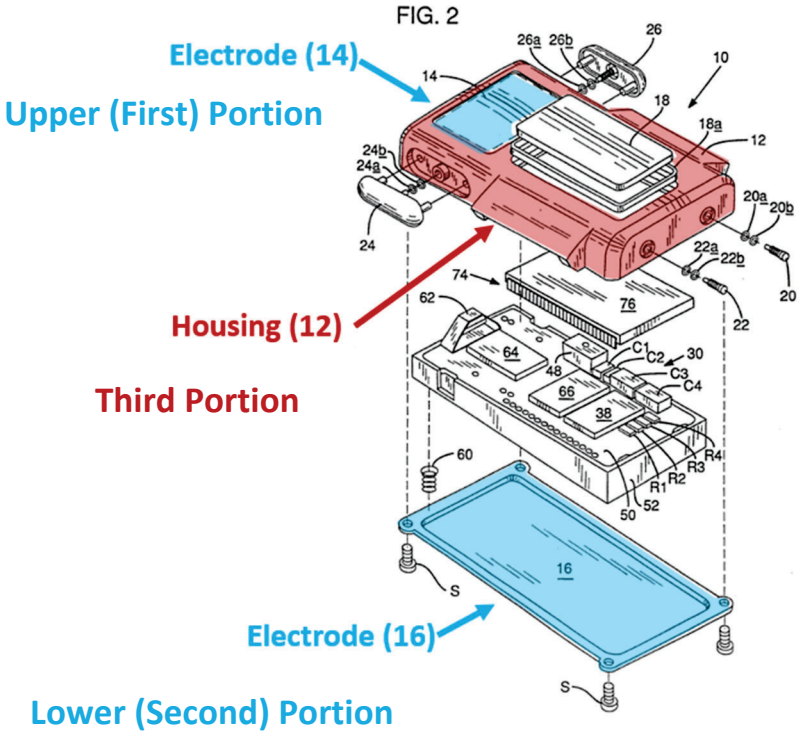

4. Claim 4: "the first portion is separated from the second portion by a third portion of the enclosure; at least the third portion is constructed from a material having a first conductivity; and the

first conductivity is insufficient to transmit the first electrical signal from the first pad to the second pad via the third portion"

69. As discussed above, Mills discloses that the housing 12 may be molded plastic, such as ABS plastic, which is an electrical insulator having a first conductivity. EX1006, 6:40-43. Thus, Mills discloses that a first portion of its enclosure, containing a first pad (electrode 14), and a second portion of its enclosure, containing a second pad (electrode 16), are separated by a third portion of its enclosure, housing 12. Further, a POSITA would understand that the first portion including electrode 14 and the second portion including electrode 16 need to be electrically isolated from each other via housing 12, for example. A POSITA would additionally understand that the housing would need to have a suitably high ("insufficient") conductivity in order to prevent the differential ECG signal between electrodes 14 and 16 from degrading by going from one electrode to the other rather than each going directly to a different input of the processor. This is basic electrical engineering circuit theory that a POSITA in the relevant time period would have been well aware of. *See, e.g.*, EX1015.

70. Electrical insulators are merely a basic electrical engineering principle of any electrical pathway to connect and measure a voltage potential from one point to another. A POSITA would understand that two or more wires or other electrical connections would each be separated by an appropriate insulative material to prevent degradation of the measurement caused by the potential shorting between different

electrical pathways. Basic electrocardiography teaches that the conductivity of the material separating the two electrodes must have a low enough conductivity such that the cardiac signal from the user does not shunt across the two electrodes.

5. Claim 8: "the enclosure further comprises at least one pocket underneath the exterior surface of the enclosure; and at least one of the first pad and the second pad is placed within the at least one pocket"

71. The '257 patent, in describing Fig. 4B, states: "lead 472 can be placed within the thickness of bezel 460 (e.g., in a pocket within the bezel wall)." EX1001, 9:46-47. Consistent with its ordinary dictionary definition, a POSITA would define a pocket to mean "any pouchlike receptacle, compartment, hollow or cavity." EX1017, 1491-92.

72. Mills discloses a housing 12 with electrode 14 as noted above. The electrode 14 has an outer surface portion 14b and an inner base metal pad portion 14a. The housing 12 and outer surface portion 14b of electrode 14 form a pocket into which the inner base metal pad portion 14a are placed, underneath the exterior surface 14b of the enclosure. EX1006, Figs. 1, 3B. The pocket is illustrated below.

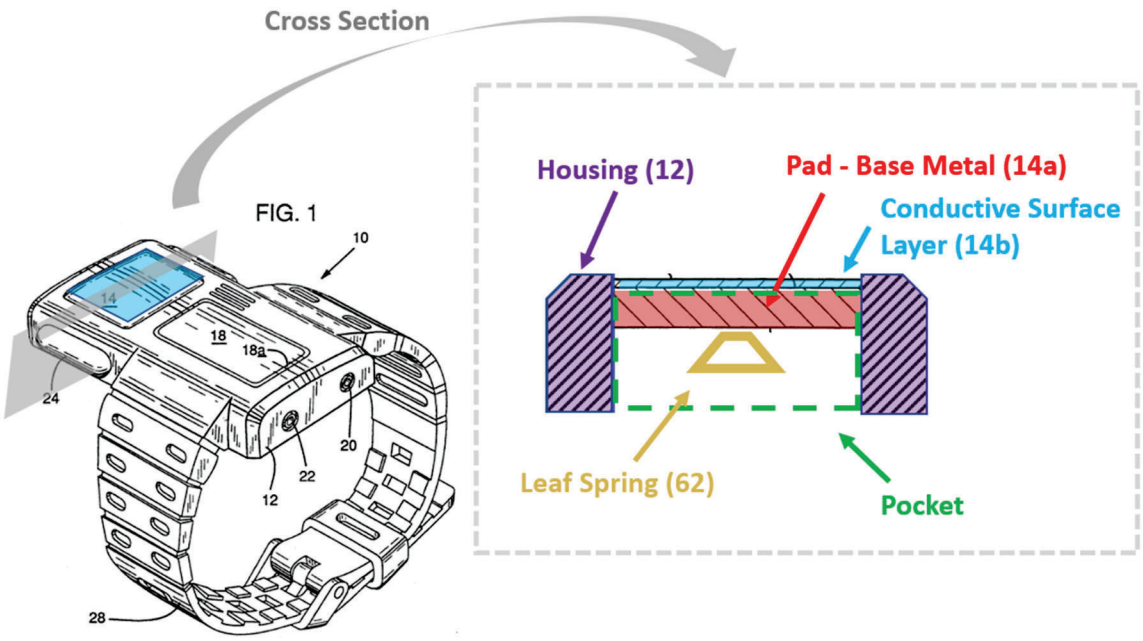

73. Additionally, leaf spring 62, a pad, is also within the pocket as shown above.

6. Claim 10: "the second lead is configured to detect the second electrical signal of the user's cardiac signal via the user's contact with the second portion of the enclosure"

74. Mills teaches that electrode 16 (second lead), which is part of the second portion of the enclosure, is "designed for use with equipment capable of producing or monitoring changing electrical conditions (indicative of changing cardiographic conditions) at the surface of a patient's [user's] skin, and are particularly suitable in cardiac monitoring, e.g. by apparatus 10. EX1006, 3:62-67.

7. Claim 11: "the second lead is configured to detect the second electrical signal of the user's cardiac signal via the user's contact with the second lead"

75. Mills teaches that electrode 16 (second lead) is "designed for use with equipment capable of producing or monitoring changing electrical conditions (indicative of changing cardiographic conditions) at the surface of a patient's [user's] skin, and are particularly suitable in cardiac monitoring, e.g. by apparatus 10. EX1006, 3:62-67.

8. Claim 14: "an interior surface of the enclosure comprises an interior surface of the first portion, wherein the first pad is positioned on the interior surface of the first portion"

76. As explained above in the discussion on Claim 8 and shown in the diagram below (annotated Figs. 1 and 3B), Mills discloses a first portion of housing 12 (enclosure) which contains electrode 14. *Id.* Electrode 14 consists of an outer conductive surface 14b and a pad 14a in the interior surface of the enclosure.

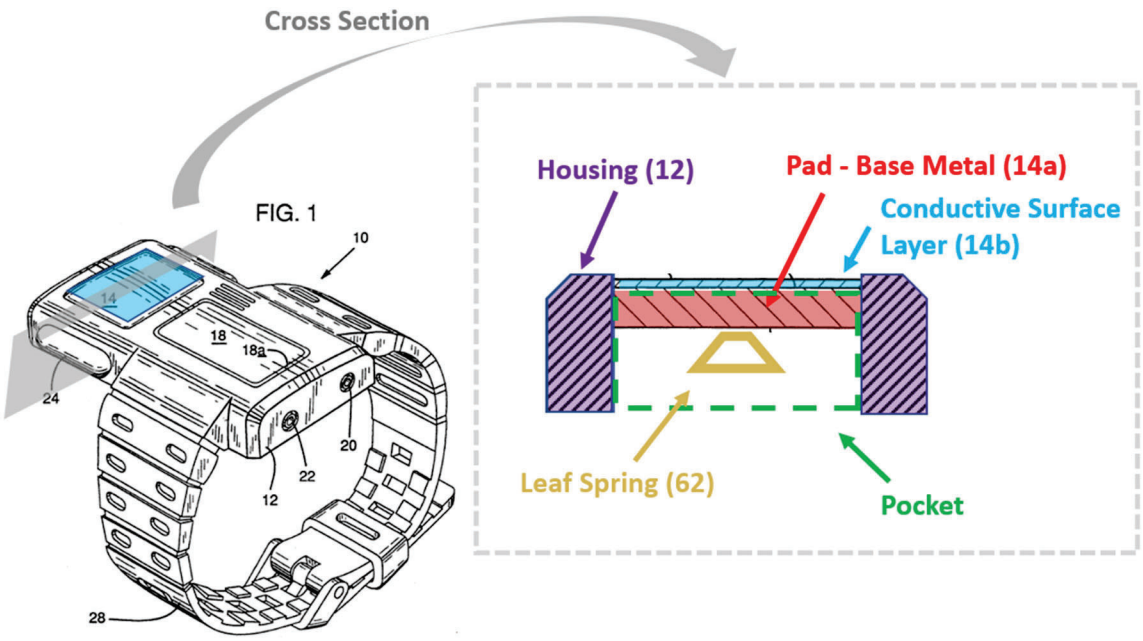

77. Alternatively, Fig. 2 of Mills illustrates leaf spring 62 (included in illustration above) which forms a pad (top portion of leaf spring 62) which is positioned on an interior side of the first portion of the outer enclosure - electrode 14. *Id.*, Fig. 2.

B. Ground 2: Claims 1-4 and 8-22 would be unpatentable because each claim would have been obvious in view of Markel in combination with Mills.

1. Claim 1: "An electronic device for detecting a user's cardiac signal, comprising"

78. Markel discloses "electronic devices with cardiovascular monitoring capability." *See* EX1005, Abstract, [0035].

a. Limitation 1[a]: "an enclosure"

79. Markel discloses that the mobile communication device (MCD, hereinafter referred to as "device") 100 includes a main body portion 110 as shown, for example, in Fig. 1.

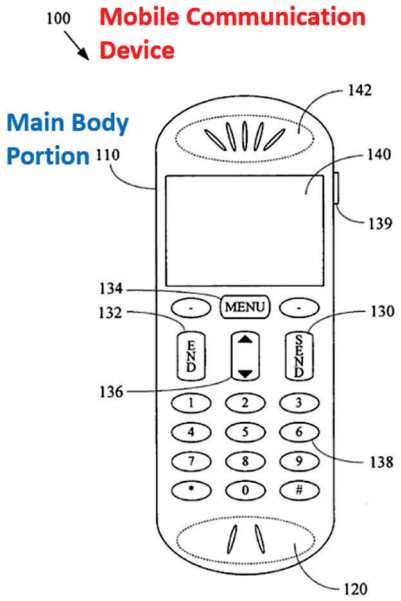

Figure 1

According to Markel, the main body portion 110 "may comprise the portion of the MCD 100 that is generally held in the hand during normal use of the MCD 100." EX1005, [0043], [0064]. Furthermore, Markel states that the device may comprise "a primary casing or housing for the user interface device." *Id.*, 0064. A POSITA would understand from this disclosure that Markel discloses an enclosure.

b. Limitation 1[b]: "a heart sensor configured to detect the user's cardiac signal"

80. Markel discloses that the MCD 100 may comprise at least one cardiac sensor "that is adapted to detect cardiac activity of a user of the MCD 100" with the user being "conductively coupled to the electrodes (e.g., by touching the electrodes)" which is a type of heart sensor that detects a cardiac signal. EX1005, [0035], [0058], [0082], [0103].

i. Limitation 1[b(i)-(iv)]: "a first lead comprising a first pad that is embedded in a first portion of the enclosure, wherein an exterior surface of the enclosure comprises an exterior surface of the first portion, wherein the first pad is positioned underneath the exterior surface of the first portion, and wherein the first pad is configured to detect a first electrical signal of the user's cardiac signal via the user's skin's contact with the exterior surface of the first portion of the enclosure"

81. Markel discloses an example of MCD (device) 400 in annotated Fig. 4 below. EX1005, Fig. 4. The device has electrodes for detecting cardiac signals that "may be disposed in any of a variety of locations" including being "substantially concealed (or hidden) from a user." EX1005, [0045], [0040]. Such electrodes may be "exposed for user contact" or "may be integrated into various molded components." *Id.*, [0037].

82. Markel discloses a first electrode "placed on or molded into the region 410b." EX1005, [0045]. A POSITA would understand from this disclosure that

Markel describes a first pad formed of conductive plastic embedded in a first portion of the enclosure. *Id.*

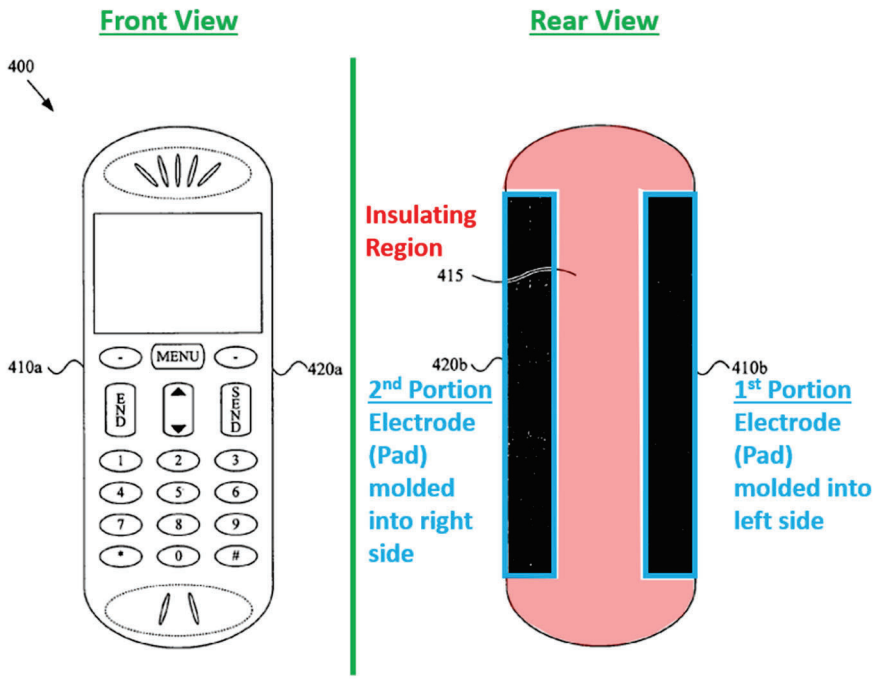

Figure 4

83. Markel further discloses, as shown in Fig. 10 below, "a cardiac information acquisition module 1010 that is coupled to the first and second electrodes 1020, 1022 and utilizes the first and second electrodes 1020, 1022 to detect and acquire various cardiac (i.e., heart-related) signals from a user." EX1005, [0058], Fig. 10. A POSITA would understand from this disclosure that Markel teaches an electrode on the exterior surface of an enclosure whereby the electrode detects an electrical signal of the user's cardiac signal from contact with the user's skin. *Id.*, [0035], [0068]

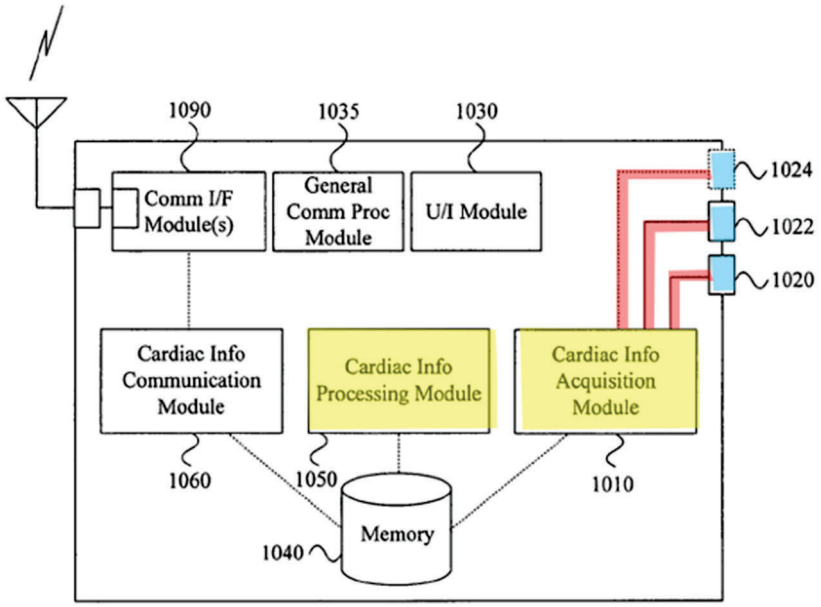

Figure 10

84. Markel does not provide details of the internal components of its device. A POSITA looking to implement Markel would have looked to other references in the same field of disclosure for information on internal components and structures to modify the device of Markel. A POSITA would have looked to the teachings of Mills, which discloses a similar device with an enclosure (housing 12) which includes a first electrode 14 shown below. EX1006, Fig. 1, 3:8-9. Electrode 14 is pad shaped as shown in Fig. 1. *Id.*

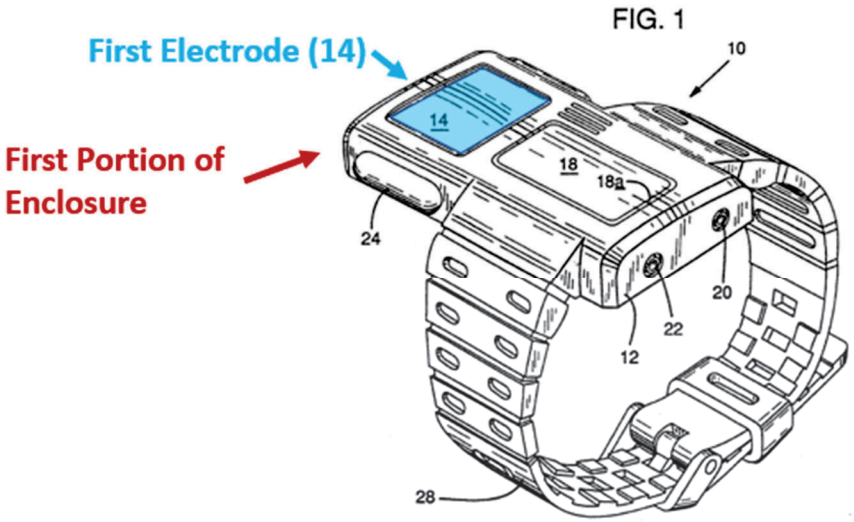

Mills specifies that the electrode 14 forms an integral part of the housing 12 by being molded therein, similar to Markel's disclosure. EX1006, 3:47-51; EX1005, [0045]. Mills further discloses electrode 14 is physically and electrically connected to processing circuitry (ECG amplifier 32) by a leaf spring 62 as shown in Fig. 2 (reproduced below with annotations). *Id.*, 4:67-5:3.

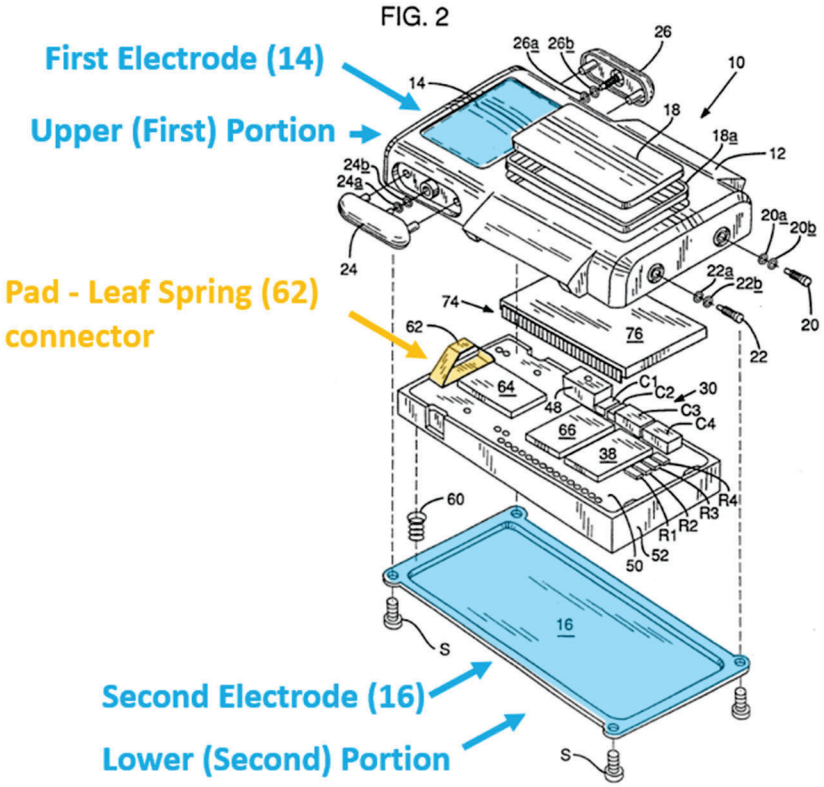

Mills teaches that "electrode 14 is connected to the … signal input terminal of ECG amplifier 32 via a generally trapezoid-shaped, split and thus slidably yielding, leaf spring 62 connected to a circuit pad formed on the top side of PCB 50." EX1006, 4:67-5:3. The top of the trapezoid-shaped leaf spring 62 is a pad.

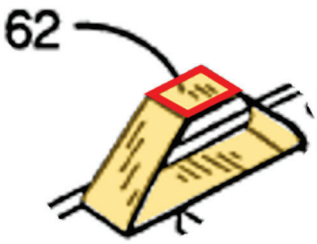

The pad of the leaf spring 62 is pressed against the inner wall of electrode 14 and surrounded by the housing 12 and is therefore embedded in device 100. EX1006, 4:68-5:3, FIG. 2.

85. A POSITA would understand from this disclosure that leaf spring 62 is a pad embedded in the enclosure of device 100, the pad is underneath the exterior surface, and the pad is configured to detect an ECG signal of the user via its contact with electrode 14 located on the exterior surface.

86. It would have been obvious to incorporate the pad (leaf spring 62) teachings of Mills into the device of Markel because Mills provides details of internal physical connections on which Markel is silent. Markel teaches that "electrodes may be incorporated into the MCD 100 in a variety of manners," which would include using a pad underneath the exterior surface. EX1005, [0035]. Leaf springs are well known electrical connectors commonly used in the art. Leaf springs are commonly employed as electrical connectors because they provide good electromechanical contact between two components. Leaf springs are often placed between two components as an electrical connector (or bridge) and mechanical pressure is applied such that the leaf spring pushes against both components to maintain good contact pressure. In my experience, leaf springs are commonly used because they solve manufacturing and assembling complexities by, for example, eliminating the need to solder a wire between the electrode and a circuit board to

electrically connect the two together. A POSITA seeking to implement Markel's device would look to Mill's disclosure for ways to internally connect the electrodes of Markel to internal electronic components using pads. Thus, a POSITA would utilize the leaf spring 62 taught by Mills to connect the electrodes 410b, 420b of Markel to internal processing components taught by Markel.

87. Once incorporated into the internal components of Markel, the leaf spring 62 of Mills would be embedded in the housing of Markel because its top pad portion is placed underneath an exterior surface material and against an inner wall of the exterior surface material. A POSITA would have an expectation of success in the combination as it is a mere rearrangement of known mechanical components in a complementary device. A POSITA would be led to the claimed invention based on the teachings of Markel and Mills.

ii. Limitation 1[b(v)-(vi)]: "a second lead comprises a second pad that is embedded in a second portion of the enclosure wherein the second pad is configured to detect a second electrical signal of the user's cardiac signal via the user's skin's contact with at least one of the second pad and the second portion of the enclosure;"

88. Markel discloses a second electrode pad 420b forming a second portion of the enclosure. EX1005, [0045]. Markel states that a second electrode may be molded into the region 420b, which includes conductive plastic. *Id.* As discussed above with regard to limitation 1[b(i)-(iv)], Mills provides details of internal

connections. Again, as discussed above, Mills discloses electrode 14 is physically and electrically connected to a leaf spring 62 as shown in annotated Fig. 2 above. EX1006, 4:64-66, 5:3; *see also Id.*, 4:1-3. Leaf spring 62 includes a top flat pad portion that presses against electrode 14 to create an electrical lead. It would have been obvious to incorporate the leaf spring of Mills into the device of Markel because Mills provides details of internal physical connections on which Markel is silent. Markel teaches that "electrodes may be incorporated into the MCD 100 in a variety of manners," which would include using a pad underneath the exterior surface. EX1005, [0035]. Once incorporated into the internal components of Markel, the leaf spring of Mills would be embedded into the electrode of Markel again as discussed above.

89. Markel discloses the electrode in region 420b detects and acquires various cardiac signals from a user. EX1005, [0058]. Markel further discloses that the electrodes can detect cardiac activity of a user "that is conductively coupled to the electrodes (e.g., by touching the electrodes)." *Id.*, [0035], [0068]; *see also, Id.*, [0049] (contact electrodes with hands or fingers). Using the leaf spring of Mills as discussed above, the electrical signal is then coupled from the electrode 420b through the leaf spring via the leaf spring's top pad to a printed circuit board (PCB), such as PCB 50 of Mills, and ultimately to an ECG amplifier for processing. EX1006, 4:68-5:3.

a. Limitation 1[c]: "a processor coupled to the heart sensor to receive and process the detected cardiac signal wherein the first lead further comprises a first connector coupled to the first pad and configured to provide the first electrical signal detected by the first pad to the processor, and wherein the second lead further comprises a second connector coupled to the second pad and configured to provide the second electrical signal detected by the second pad to the processor."

90. Markel discloses "electronic devices" with "cardiovascular monitoring capability" that may "comprise a cardiac sensor (e.g., electrodes)" that may also "acquire, analyze, and/or communicate user health-related information" such as derived from electrodes. EX1005, Abstract. A POSITA would understand from this disclosure that Markel teaches a processor (e.g., elements that acquire, analyze, and/or communicate heart sensor information) coupled to a heart sensor. Markel discloses the processor can be any of a number of hardware components including an integrated circuit, processor chip and controller chip." EX1005, [0178].

91. Markel discloses a first and second lead configured as a first pad 2024 and second pad 2022, respectively, on a portion of the exterior housing, and the first and second pads each connected to a processor, as shown in annotated Figs. 4 and 20 below. EX1005, Figs. 4, 20. A POSITA would understand from this disclosure that Markel teaches a first lead with a first connector coupled to a first pad that provides a first electrical signal from the first pad to the processor, and a second lead with a second connector coupled to a second pad that provides a second electrical signal from the second pad to the processor.

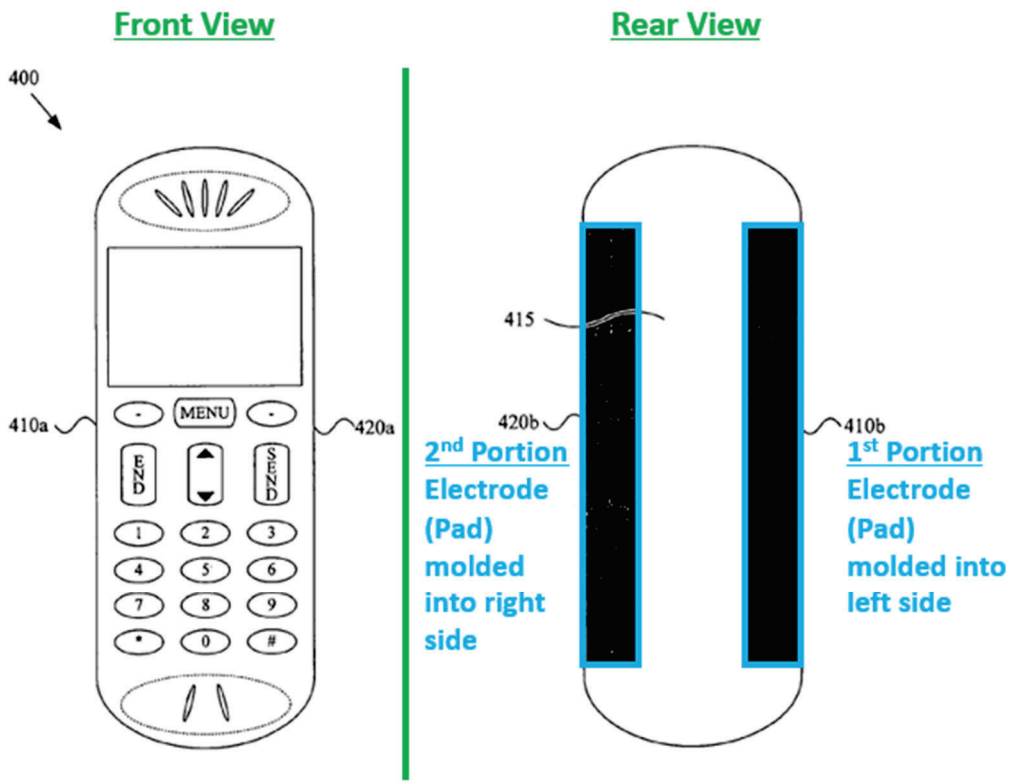
Front View
Rear View
400
410a
420a
MENU
END
SEND
415
420b
410b
2nd Portion Electrode (Pad) molded into right side
1st Portion Electrode (Pad) molded into left side

Figure 4

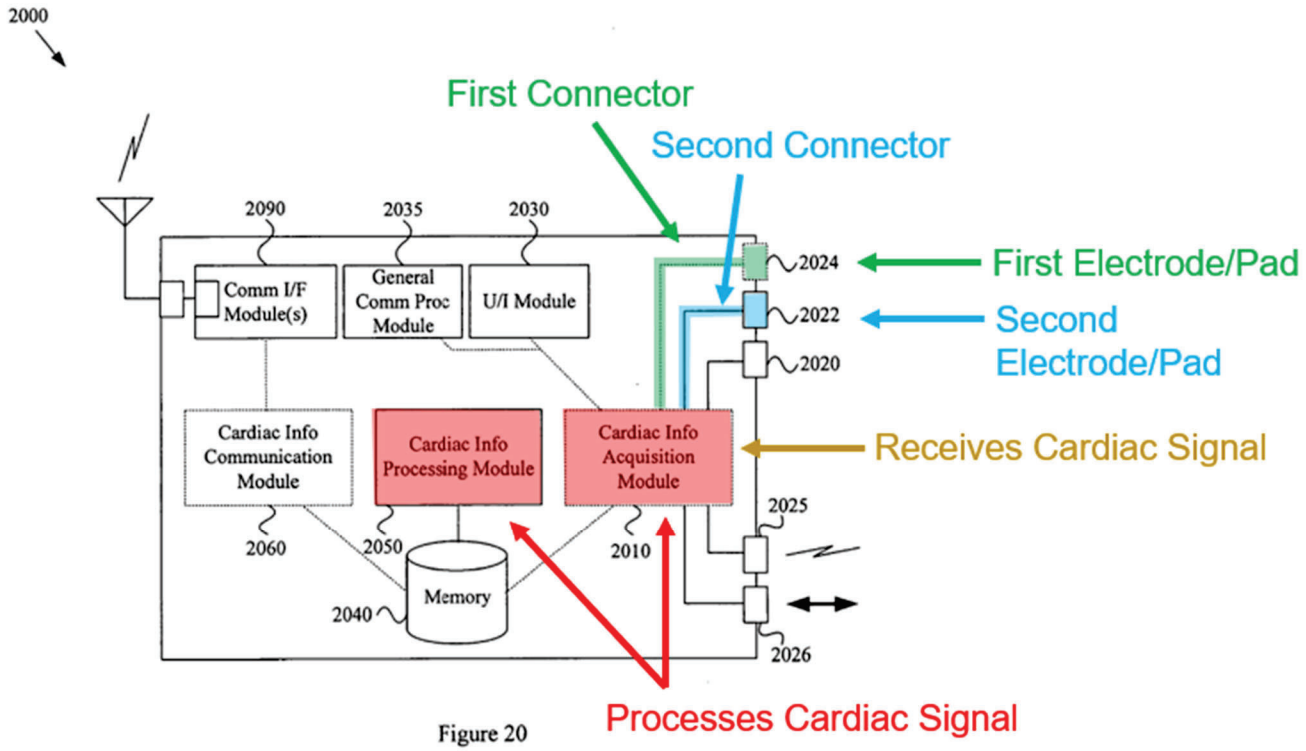

Figure 20

92. Mills further discloses electrodes 14 and 16 are electrically connected to processing circuitry (ECG amplifier 32), as shown in annotated Fig. 4 below. *Id.,* 4:64-5:3. As an alternative to the processing disclosed in Markel, it would have been obvious to use the internal componentry of Mills as a substitute as Mills provides more specific implementation details missing from Markel.

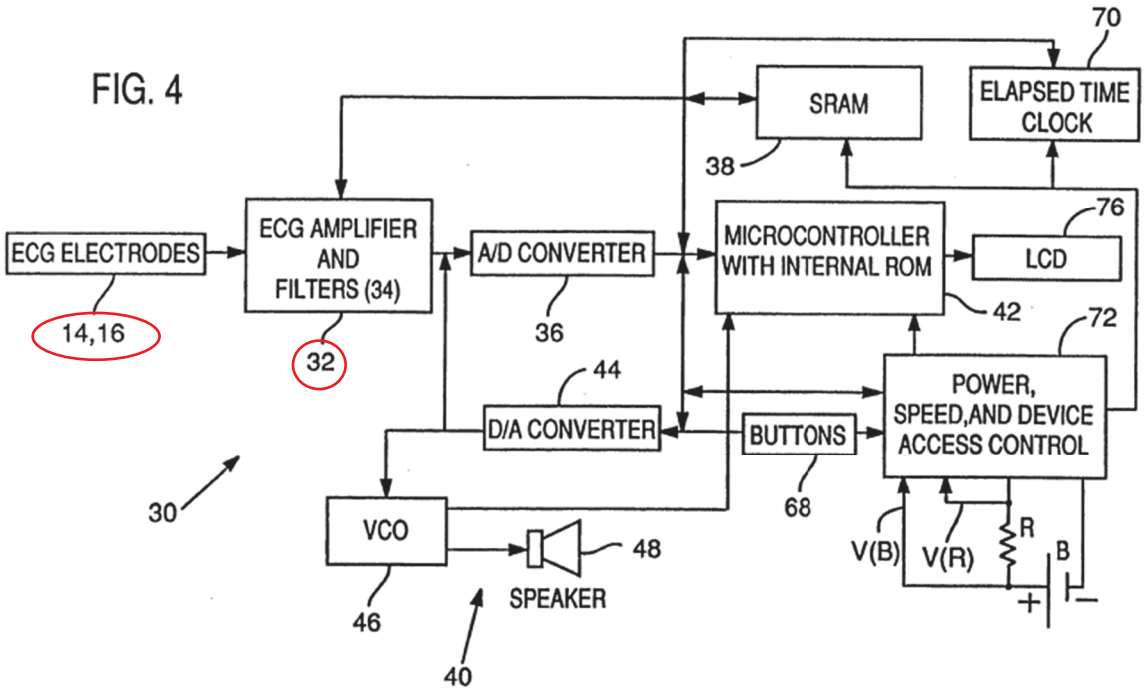

b. Claim 1 conclusion

93. For the reasons set forth above, I believe a POSITA would have understood that Markel in combination with Mills teaches every limitation of Claim 1 of the '257 patent. I believe a POSITA would have found it obvious to combine the teachings of Mills with Markel and would have expected success in doing so.

2. Claim 2: "the first portion and the second portion are located on opposite sides of the electronic device"

94. Markel discloses a first portion having a first electrode on an opposite side of an electronic device as a second portion having a second electrode. For example, Markel discloses in annotated Fig. 4 below region 410b (*first portion*) and region 420b (*second portion*) are on opposite sides of the device. EX1005, Fig. 4.

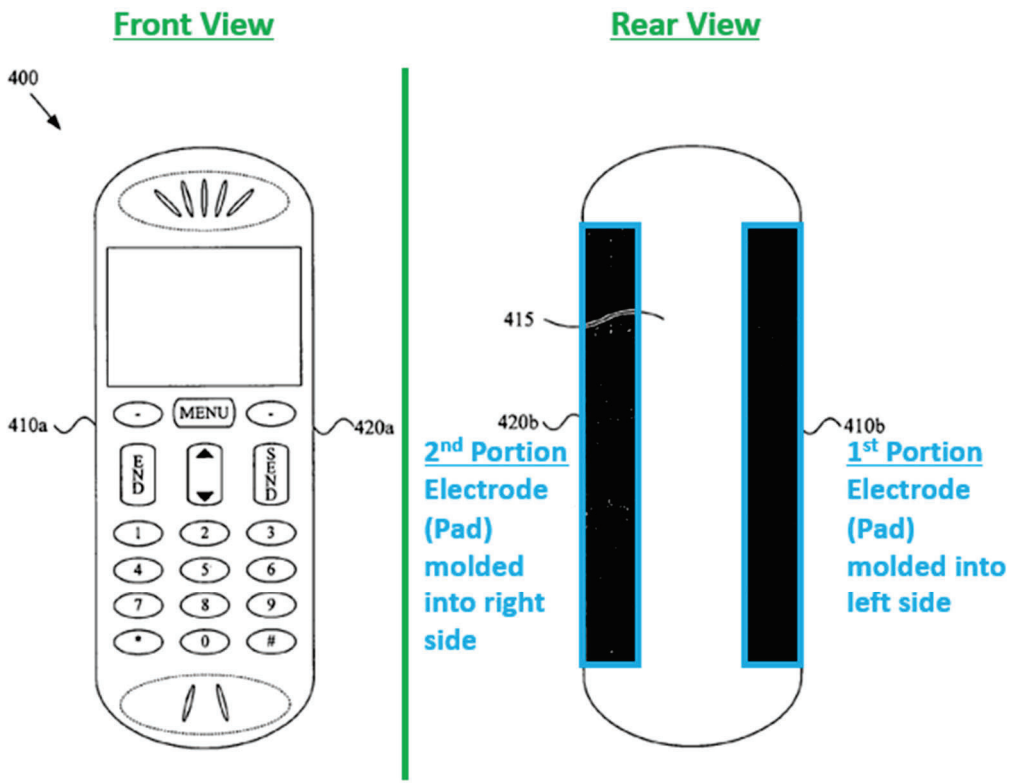

Figure 4

Region 410b is disposed on a left side of the main body portion of the MCD 400 and region 420b is disposed on a right side of the main body portion of the MCD 400.

95. I also note that in an alternative embodiment, Markel's Fig. 5 (below) discloses an MCD 500 with a first electrode 510 positioned on a send button (*first portion*), and a second electrode disposed on the opposite back 520 (*second portion*) of the MCD 500. *Id.* [0046].

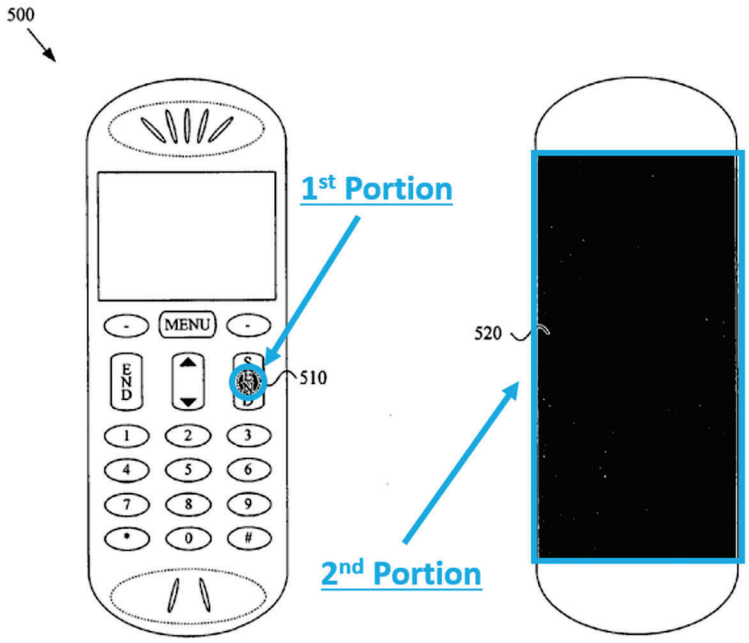

Figure 5

3. Claim 3: "wherein the first portion is electrically isolated from the second portion"

96. Markel discloses region 410b (*first portion*) and the region 420b (*second portion*) may include conductive plastic. EX1005, [0045]. Markel further discloses an insulating region 415 that electrically isolates the region 410b from the region 420b, as shown in Fig. 4 below. *Id.*

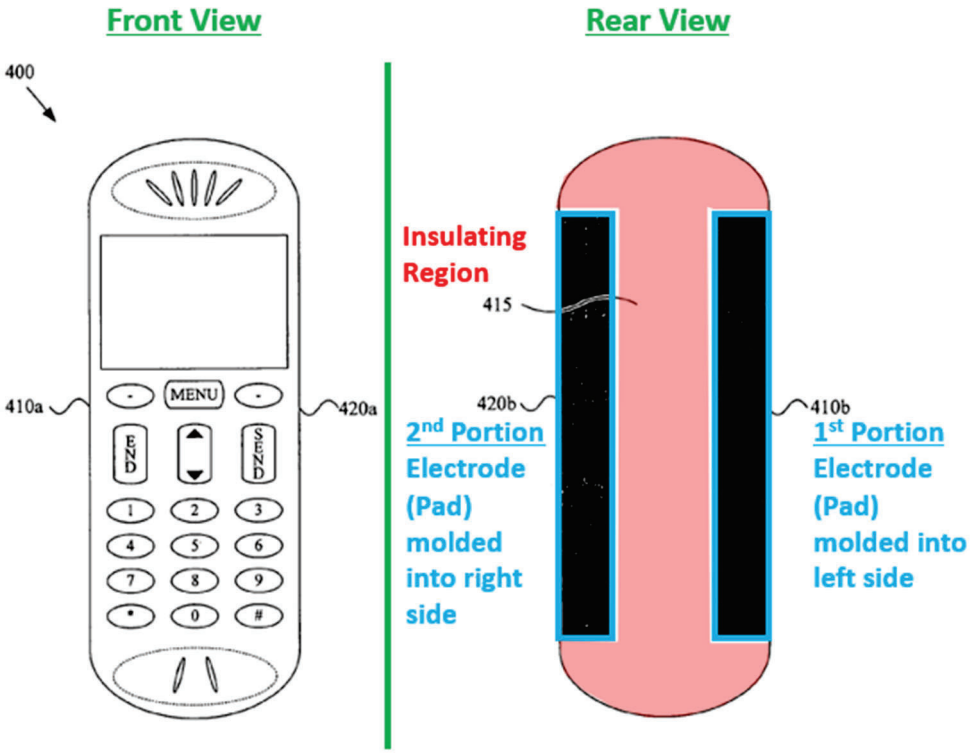

Figure 4

4. Claim 4: "the first portion is separated from the second portion by a third portion of the enclosure; at least the third portion is constructed from a material having a first conductivity; and the first conductivity is insufficient to transmit the first electrical signal from the first pad to the second pad via the third portion"

97. As discussed above with regard to Claim 3, Markel discloses region 410b (*first portion*) and the region 420b (*second portion*) are separated by insulating region 415. A POSITA would have understood that an insulating region, such as the insulating region discussed above in Markel, is a third portion formed of a material having a first conductivity insufficient to transmit the first electrical signal from the first pad to the second pad via the third portion.

5. Claim 8: "the enclosure further comprises at least one pocket underneath the exterior surface of the enclosure; and at least one of the first pad and the second pad is placed within the at least one pocket"

98. Consistent with its ordinary dictionary definition, a POSITA would define a pocket to mean "any pouchlike receptacle, compartment, hollow or cavity." EX1017, 1491-92. A POSITA would understand that Markel's housing may enclose an interior housing space forming a pocket (compartment, hollow or cavity) underneath the exterior surface of the enclosure. EX1005, [0064], [0068], Figs. 1 and 4-5. A POSITA would understand that the housing 400 (Fig. 4) of Markel protects an interior compartment, hollow or cavity where electronics are located. The interior space is a pocket. As discussed above, the leaf spring 62 in the combined Markel/Mills device would be deposited or located within this pocket created by the housing of Markel.

6. Claim 9: "a display, wherein the enclosure supports the display, and wherein at least a portion of the exterior surface of the enclosure forms at least a portion of an exterior surface of the electronic device behind the display and a third lead embedded with the display, wherein the third lead is configured to detect a third electrical signal of the user's cardiac signal via the user's contact with at least one of the third lead and the display"

99. Fig. 1 of Markel discloses that the enclosure or housing of MCD 100 supports a display 140. EX1005, Fig. 1, [0034].

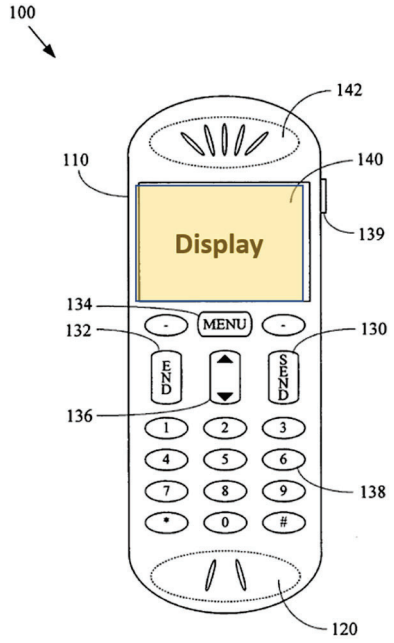

Figure 1

Further, Markel discloses that an electrode may be integrated or embedded into the touch screen of display 140. EX1005, [0044], [0078]. The electrodes of Markel are "cardiac sensor[s] (e.g., one or more electrodes) … adapted to detect cardiac activity of a user." *Id.*, [0035]. An electrode incorporated into the display is shown in Fig. 15. *Id.*, Fig. 15.

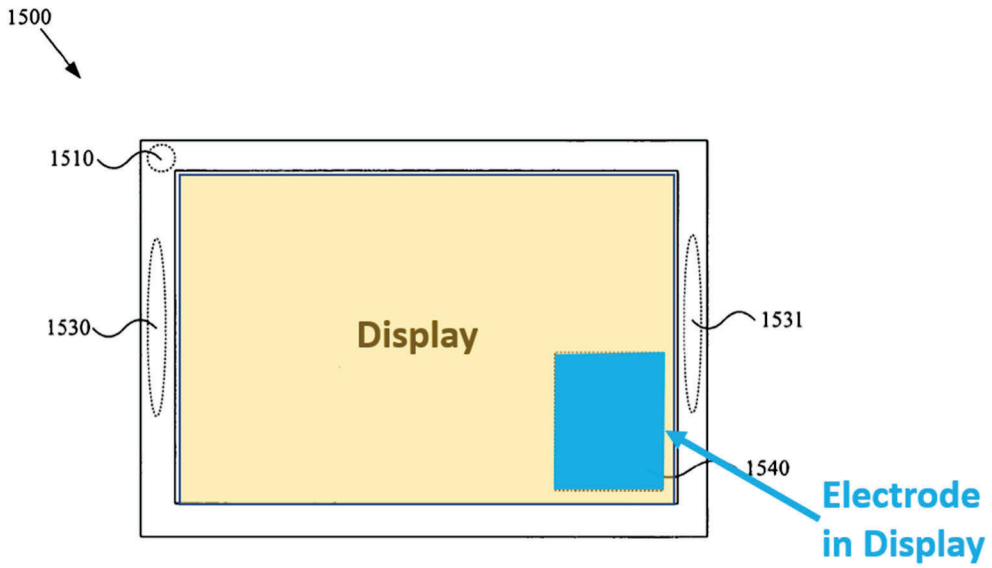

Figure 15

7. Claim 10: "wherein the second lead is configured to detect the second electrical signal of the user's cardiac signal via the user's contact with the second portion of the enclosure"

100. Markel discloses an example of MCD (device) 400 in annotated Fig. 4 below. EX1005. The device has electrodes for detecting cardiac signals that "may be disposed in any of a variety of locations." EX1005, [0045], [0040]. Such electrodes may be "exposed for user contact." *Id.*, [0037].

101. Markel discloses a second electrode "placed on or molded into the region 420b." EX1005, [0045]. A POSITA would understand from this disclosure that Markel describes a second pad formed of conductive plastic embedded in a second portion of the enclosure. *Id.*

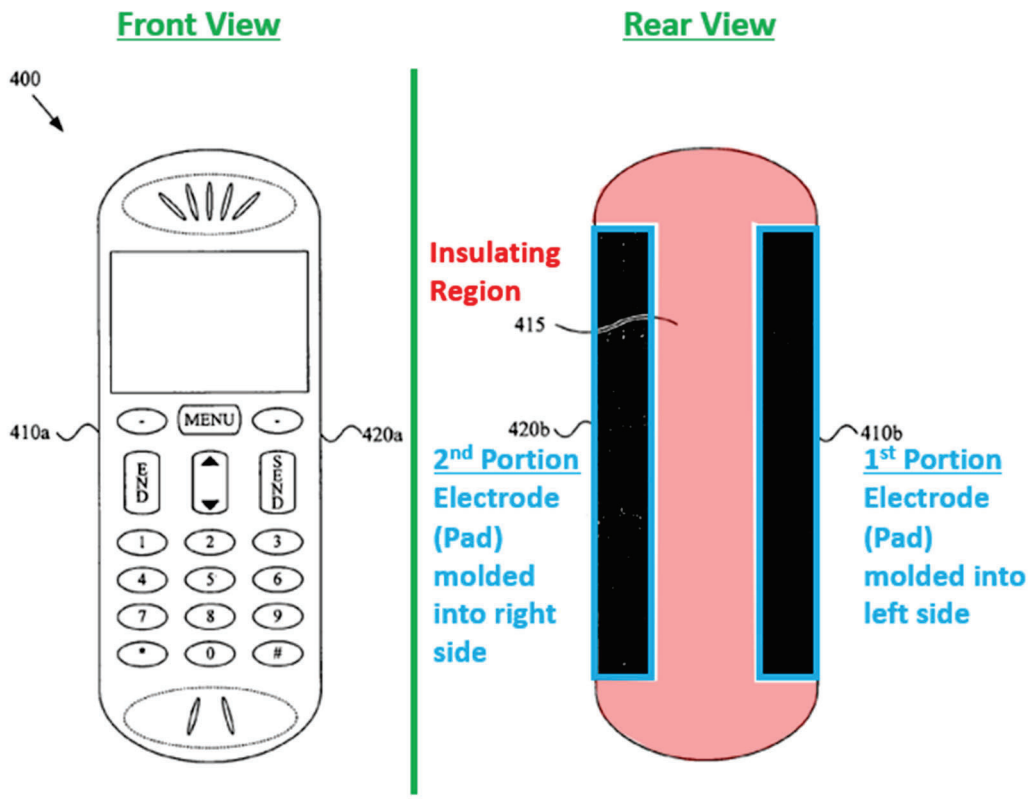

Figure 4

102. Markel further discloses, as shown in annotated Fig. 10 below, "a cardiac information acquisition module 1010 that is coupled to the first and second electrodes 1020, 1022 and utilizes the first and second electrodes 1020, 1022 to detect and acquire various cardiac (i.e., heart-related) signals from a user." EX1005, 0058, Fig. 10. A POSITA would understand from this disclosure that Markel teaches a second lead on the exterior surface of an enclosure whereby the electrode detects an electrical signal of the user's cardiac signal from the user's contact with the second portion of the enclosure.

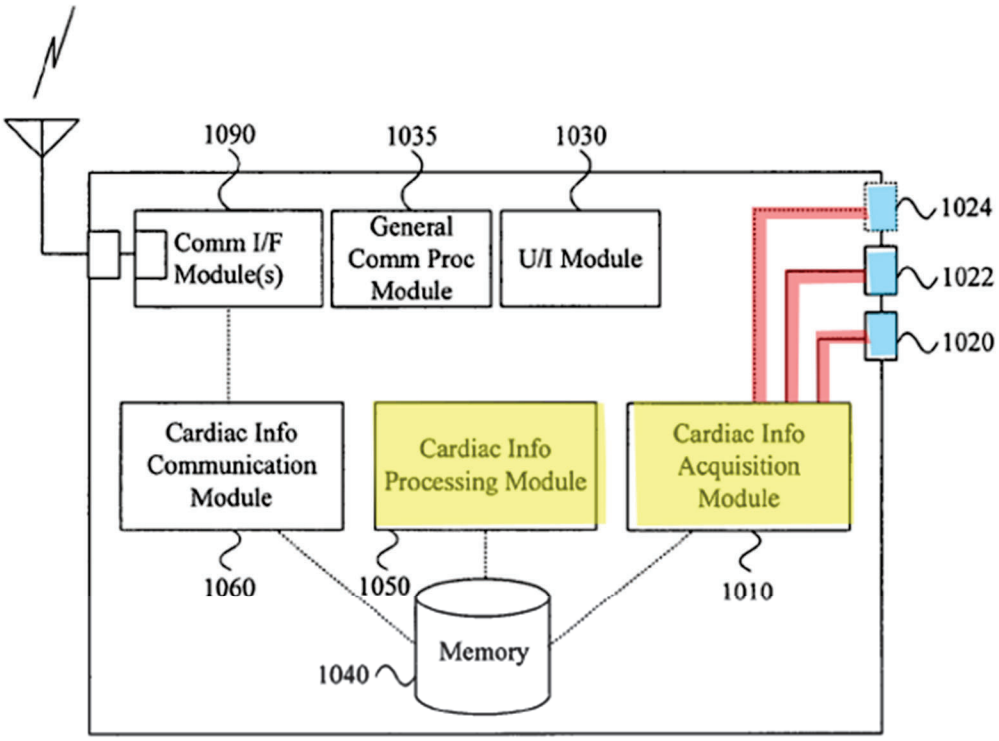

Figure 10

8. Claim 11: "wherein the second lead is configured to detect the second electrical signal of the user's cardiac signal via the user's contact with the second lead"

103. Similar to the discussion for Claim 11 above, the second portion of the enclosure may also be a second lead. A POSITA would understand from this disclosure that Markel teaches a second lead on the exterior surface of an enclosure whereby the electrode detects an electrical signal of the user's cardiac signal from the user's contact with the second lead.

9. Claim 12: "wherein the first portion of the enclosure is a bezel"

104. Markel discloses that the MCD 100 may include a display 140. EX1005, [0034]. Markel further goes on to state that an electrode may be disposed on a border of the display (*i.e.,* bezel). EX1005, [0044]. Markel provides an example of a display with electrodes on a border of the display in Fig. 15 (shown below with annotations). EX1005, [0078], Fig. 15

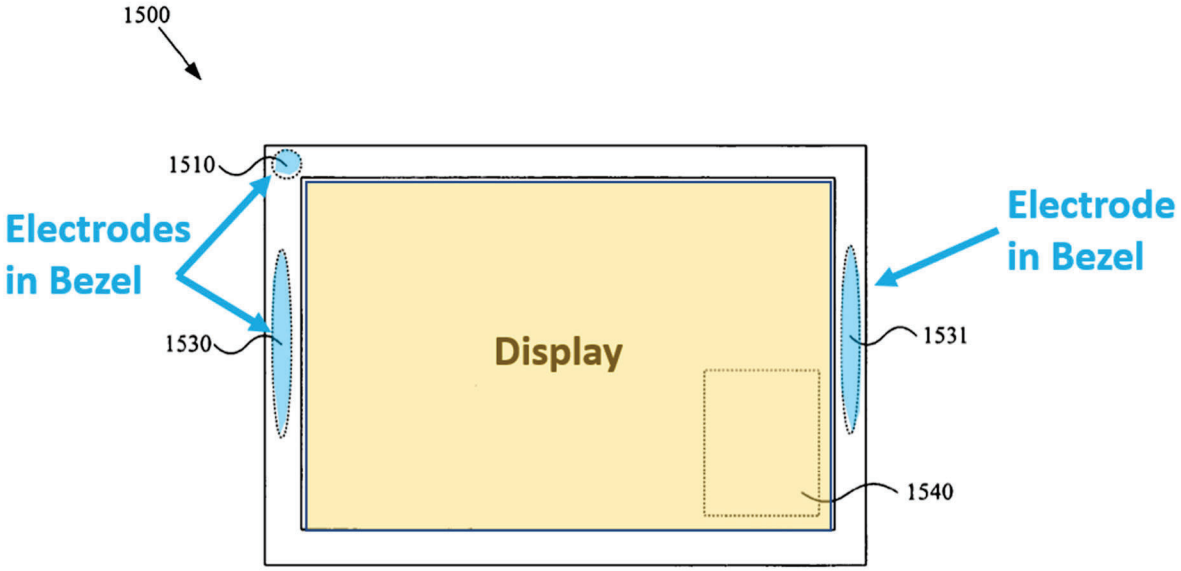

Figure 15

10. Claim 13: "wherein the second portion of the enclosure is a bezel"

105. Markel discloses that the device 100 may include a display 140. EX1005, [0034]. Markel further discloses an electrode may be disposed on a border of the display (*i.e.*, bezel). EX1005, [0044]. Markel also discloses an example of a

display with electrodes disposed on the border in Fig. 15 (shown below with annotations). EX1005, [0078], Fig. 15.

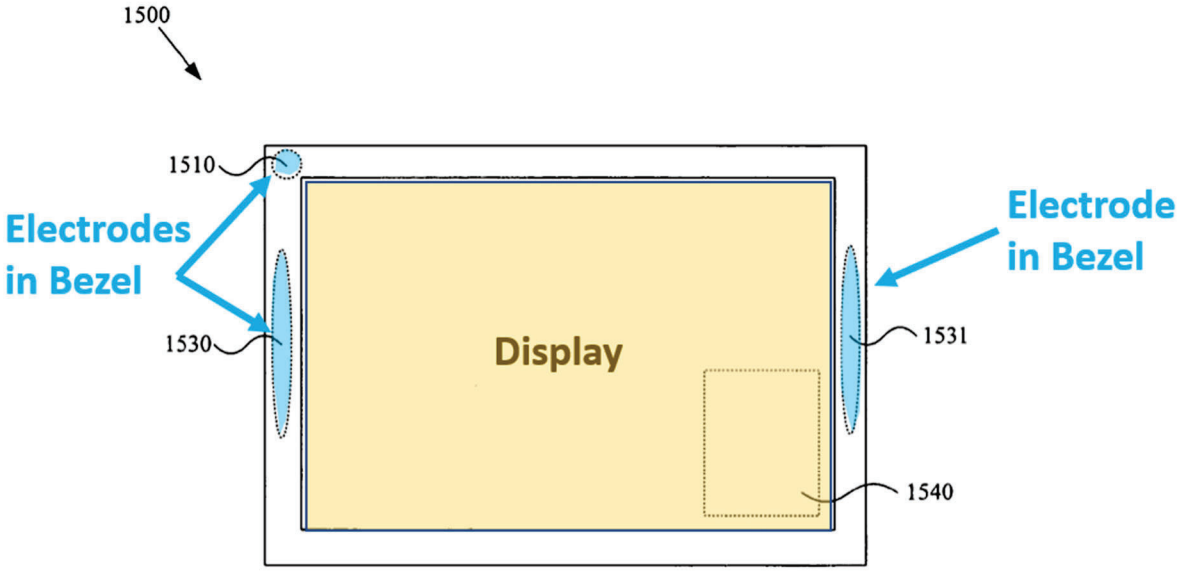

Figure 15

11. Claim 14: "wherein an interior surface of the enclosure comprises an interior surface of the first portion, wherein the first pad is positioned on the interior surface of the first portion"

106. As discussed previously, Markel discloses that the first electrode may be molded into the region 410b, which includes the embedded conductive plastic discussed above. EX1005, [0045].

107. As explained above, Markel does not provide details of the internal components of its device. A POSITA looking to implement Markel would have looked to other references in the same field of disclosure for information on internal components and structures to modify the device of Markel. A POSITA would have

looked to the teachings of Mills, which discloses a similar device with an enclosure (housing 12) which includes a first electrode 14 shown below. EX1006, Fig. 1, 3:8-9. Electrode 14 is pad shaped as shown in Fig. 1. *Id*.

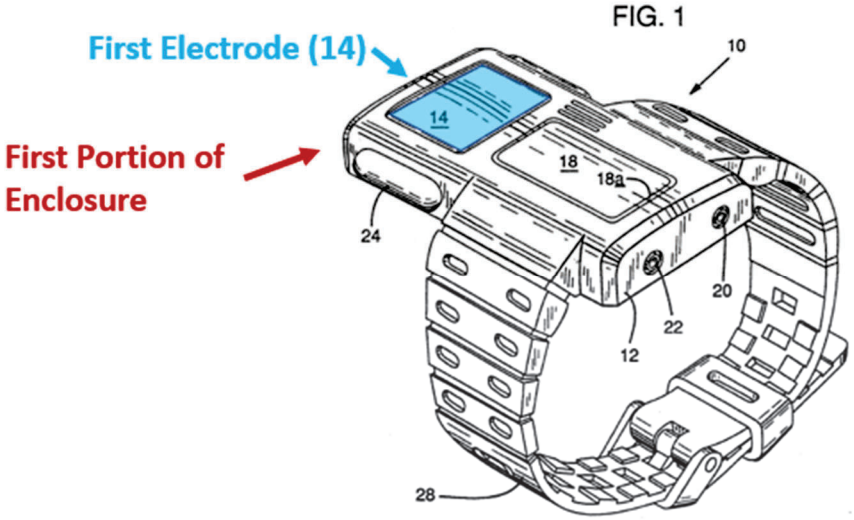

Mills specifies that the electrode 14 forms an integral part of the housing 12 by being molded therein, similar to Markel's disclosure. EX1006, 3:47-51; EX1005, [0045]. Mills further discloses electrode 14 is physically and electrically connected to processing circuitry (ECG amplifier 32) by a leaf spring 62 as shown in Fig. 2 (reproduced below with annotations). EX1006, 4:67-5:3.

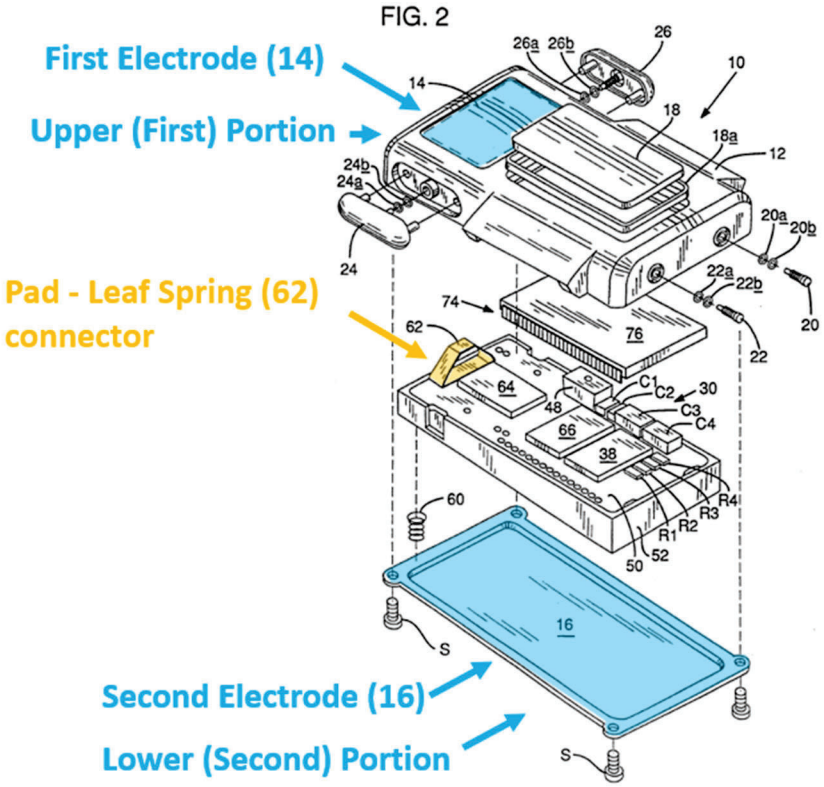

Mills teaches that "electrode 14 is connected to the … signal input terminal of ECG amplifier 32 via a generally trapezoid-shaped, split and thus slidably yielding, leaf spring 62 connected to a circuit pad formed on the top side of PCB 50." EX1006, 4:67-5:3. The top of the trapezoid-shaped leaf spring 62 is a pad.

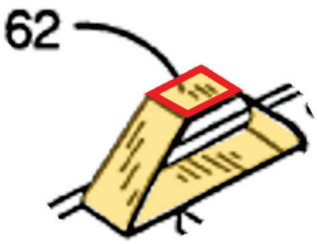

The pad of the leaf spring 62 is pressed against the inner wall of electrode 14 and surrounded by the housing 12 and is therefore embedded in device 100. EX1006, 4:8-5:3, Fig. 2.

108. A POSITA would understand from this disclosure that leaf spring 62 is a pad pressed against the interior surface of the enclosure of Markel at the first portion of Markel's enclosure.

109. It would have been obvious to incorporate the pad (leaf spring 62) teachings of Mills into the device of Markel because Mills provides details of internal physical connections on which Markel is silent. Markel teaches that "electrodes may be incorporated into the MCD 100 in a variety of manners," which would include using a pad underneath the exterior surface. EX1005, [0035]. Leaf springs are well known electrical connectors commonly used in the art. Leaf springs are sometimes employed as electrical connectors because they provide good electromechanical contact between two components. The leaf spring is placed between two components as an electrical connector (or bridge) and mechanical pressure is applied such that the leaf spring pushes against both components to maintain good contact pressure. In my experience, leaf springs are commonly used because they solve manufacturing and assembling complexities by, for example, eliminating the need to solder a wire between the electrode and a circuit board to electrically connect the two together. A POSITA seeking to implement Markel's

device would look to Mill's disclosure for ways to internally connect the electrodes of Markel to internal electronic components using pads. Thus, a POSITA would utilize the leaf spring 62 taught by Mills to connect the electrodes 410b, 420b of Markel to internal processing components taught by Markel. Accordingly, Markel in combination with Mills as discussed above with respect to Claim 1 includes an interior surface with the first pad (leaf spring 62 of Mills) positioned on the interior surface of the first portion (region 410b of Markel). EX1005; EX1006.

12. Claim 15: "An electronic device for detecting a user's cardiac signal, comprising:

110. Markel discloses "a mobile communication device, general-purpose computer user interface device, and other … electronic devices with cardiovascular monitoring capability." *See* EX1005, Abstract, [0035].

a. Limitation 15[a]: "an enclosure"

111. Fig. 1 of Markel discloses that the mobile communication device (MCD) 100 includes a main body portion 110 as shown, for example, in annotated Fig. 1 below.

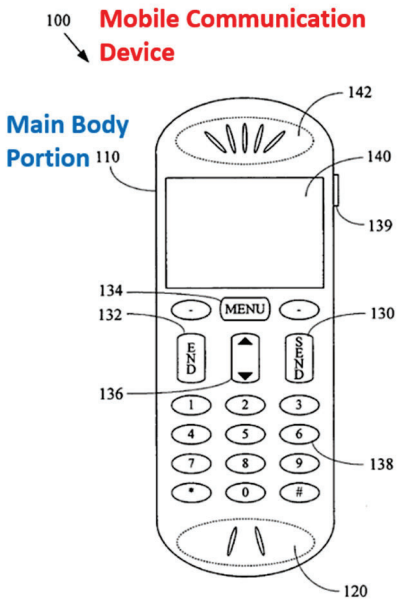

Figure 1

According to Markel, the main body portion 110 "may comprise the portion of the MCD 100 that is generally held in the hand during normal use of the MCD 100" and the device may comprise a "casing or housing." and the device may comprise a "casing or housing."EX1005, [0043], [0064].

b. Limitation 15[b]: A display screen exposed to the user through an opening in the enclosure:

112. Markel discloses that the MCD 100 comprises various user output features such as "a display 140 (which may also function as a touch screen input feature)." EX1005, [0034]. As shown in Fig. 1 below, the display 140 is shown visibly within the main body portion 110 of the device 100. As such, a POSITA would consider the main body portion 110 to have an opening in the main body portion 110 to accommodate the display 140.

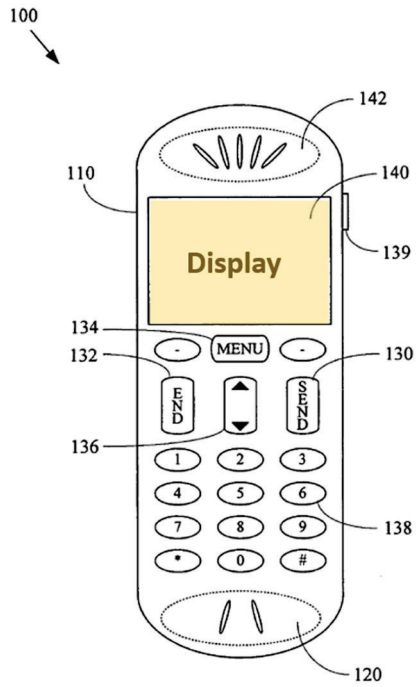

Figure 1

i. Limitation 15[c]: "a heart sensor configured to detect the user's cardiac signal"

113. Markel discloses the device 100 may comprise at least one cardiac sensor "that is adapted to detect cardiac activity of a user of the MCD 100" which is a type of heart sensor that detects a cardiac signal. EX1005, [0035], [0058], [0082], [0103].

ii. Limitation 15[c(i)]: "the heart sensor comprising: a first lead embedded in a first portion of the enclosure of the electronic device"

114. Markel describes a first pad formed of conductive plastic embedded in a first portion of the enclosure. Markel discloses electrodes for detecting the cardiac signals "may be disposed in any of a variety of locations" on its device including

being "generally … [or] substantially concealed (or hidden) from a user. *Id.*, [0045], [0039]-[0040]. Such electrodes may be "exposed for user contact" or "may be integrated into various molded components." *Id.*, [0037].

115. Markel discloses an example of MCD (device) 400 in Fig. 4 shown below. EX1005, [0045]. Markel discloses a first electrode "placed on or molded into the region 410b." *Id.* Accordingly, Markel describes a first pad formed of conductive plastic embedded in a first portion of the enclosure. *Id.*

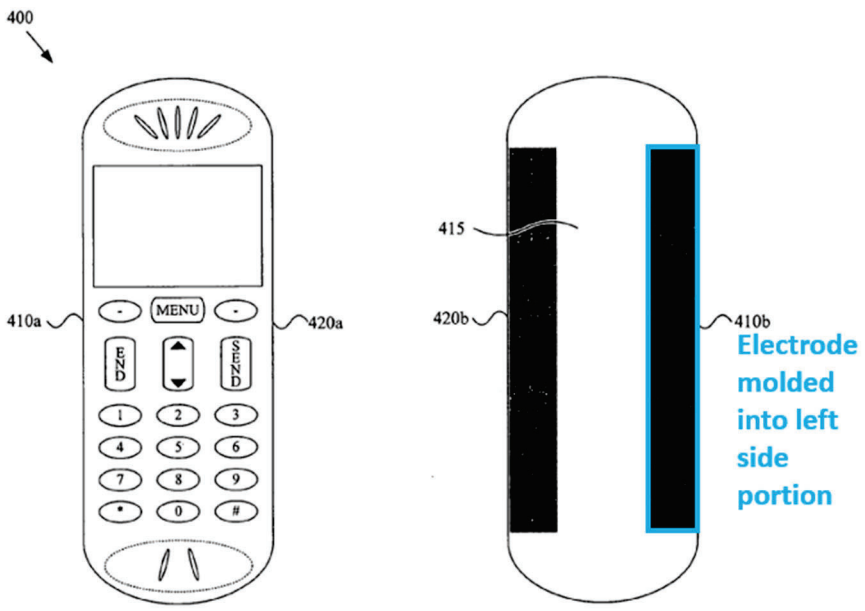

Figure 4

116. Markel discloses a first pad embedded in a first portion of an enclosure with a connector coupling it to a processor as shown in annotated Fig. 20 below. A POSITA would understand this to be a first lead embedded in a first portion because it couples a body signal at the electrode to processing circuitry.

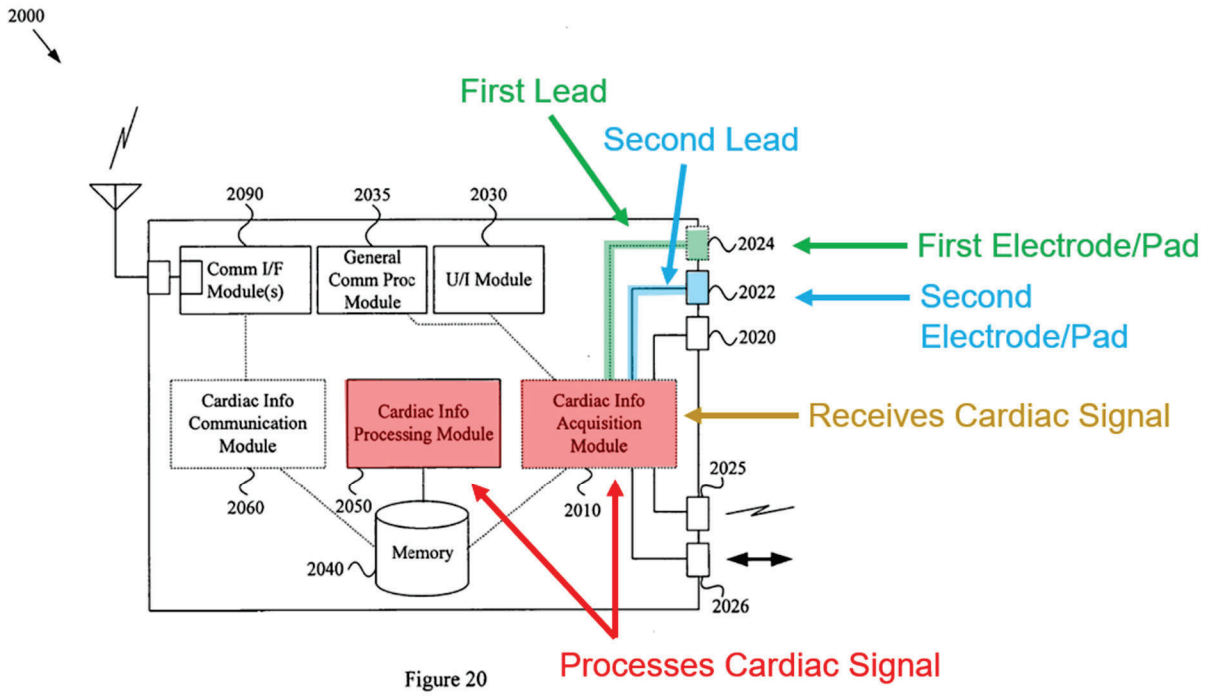

Figure 20

117. Markel does not provide details of the internal components of its device. A POSITA looking to implement Markel would have looked to other references in the same field of disclosure for information on internal components and structures to make the device of Markel. Mills, which discloses a similar device, discloses an enclosure (housing 12) which includes a first electrode 14. EX1006, Fig. 1 (shown below), 3:8-9. Mill's electrodes are similar to Markel's electrodes 410b, 420b.

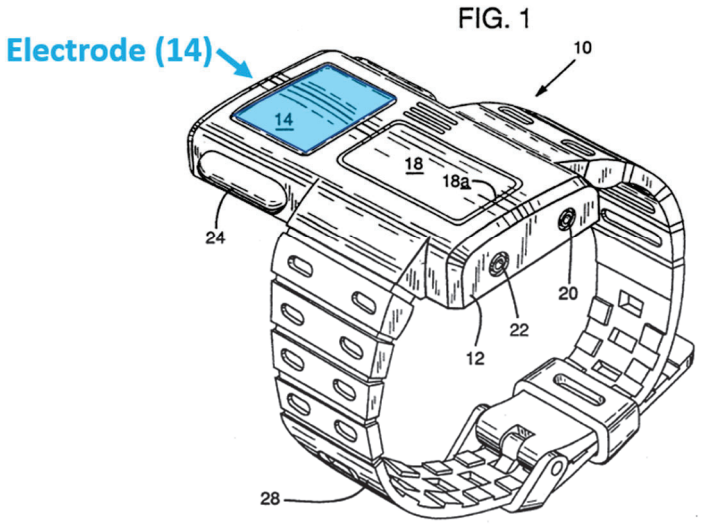

Mills further specifies that the electrode 14 forms an integral part of the housing 12 by being molded therein, again similar to Markel's disclosure. *Id.*, 3:47-51. Mills further discloses electrode 14 is physically and electrically connected to processing circuitry by a leaf spring 62 as shown in Fig. 2 (reproduced below with annotations). *Id.*, 4:67-5:3; *See also Id.*, 4:1-3.

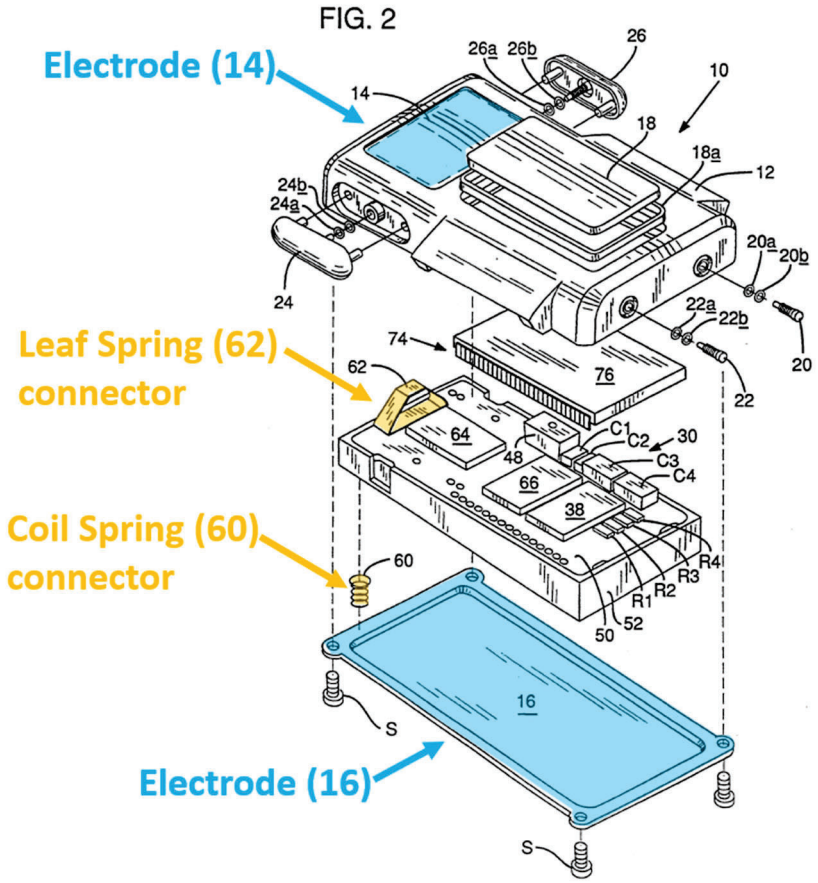

Leaf spring 62 includes a top flat pad portion that presses against electrode 14. The top flat pad portion of leave spring 62 is a pad that is pressed against the inner wall of electrode 14 and surrounded by the housing 12 and is therefore embedded in Mills' device.

118. A POSITA would have found it obvious to incorporate the leaf spring teachings of Mills into the device of Markel because Mills provides details of internal physical connections on which Markel is silent. A POSITA seeking to implement Markel's device would look to Mill's disclosure for ways to internally

connect the electrodes of Markel to internal electronic components. Thus, a POSITA would utilize the leaf spring 62 taught by Mills to connect the electrodes 410b, 420b of Markel to internal processing components taught by Markel.

119. Once incorporated into the internal components of Markel, the leaf spring 62 of Mills would be embedded in the housing of Markel because its top pad portion is placed underneath an exterior surface material and against an inner wall of the exterior surface material. A POSITA would have expected success in this combination as it is a simple rearrangement of known mechanical parts in similar devices and well within the knowledge of a POSITA in 2008.

iii. Limitation 15[c(ii)]: "wherein the first lead is configured to detect a first electrical signal of the user's cardiac signal via the user's contact with at least one of the first lead and the first portion of the enclosure of the electronic device"

120. Markel discloses a first electrode 2024 detects and acquires various cardiac signals from a user. EX1005, [0110]. Markel further discloses that the electrodes can detect cardiac activity of a user "that is conductively coupled to the electrodes (e.g., by touching the electrodes)." *Id.*, [0035], [0068]. Markel discloses a first lead in a first portion of an enclosure as shown in annotated Figs. 4 and 20 below. A POSITA would understand from these figures that this is a lead because it couples a body signal at the first electrode 2024 to processing circuitry 2010.

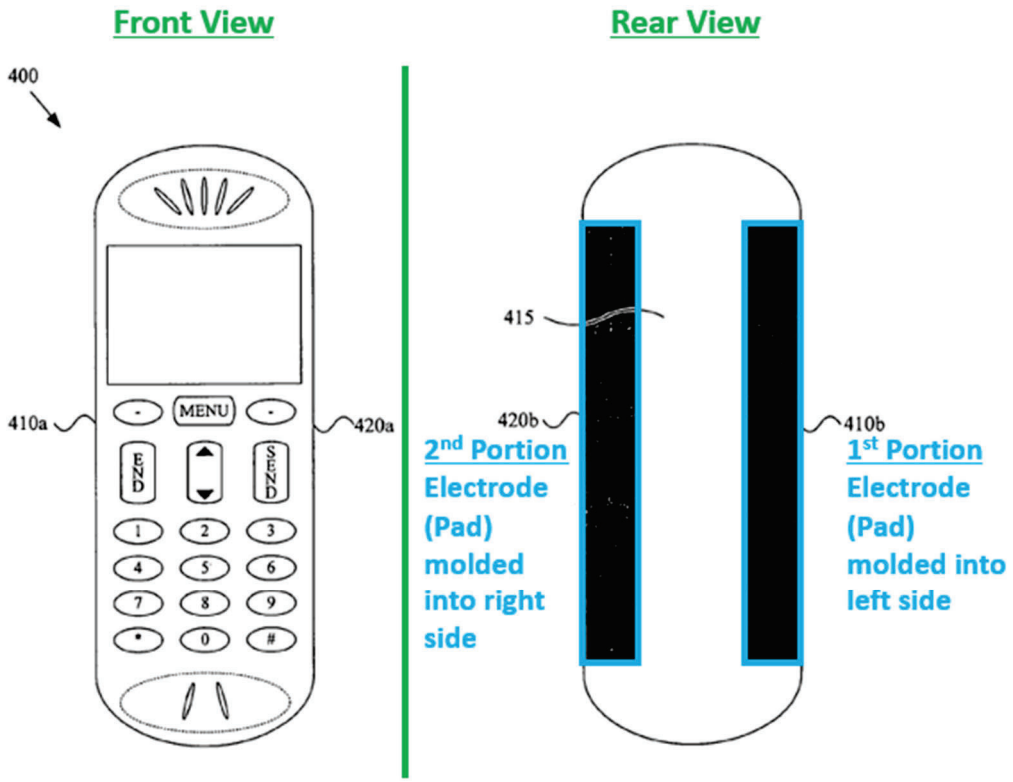
Front View
Rear View
400
410a
420a
MENU
END
SEND
415
420b
410b
2nd Portion Electrode (Pad) molded into right side
1st Portion Electrode (Pad) molded into left side

Figure 4

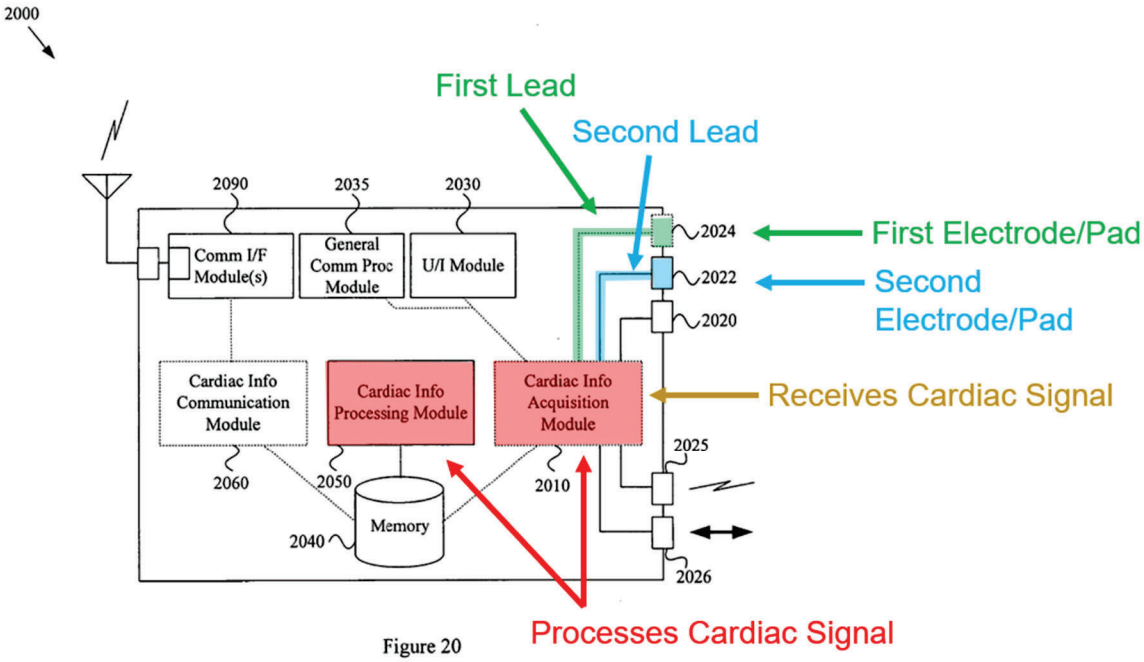

Figure 20

iv. Limitation 15[c(iii)]: "and a second lead embedded in the display screen of the electronic device

121. Fig. 1 of Markel discloses that the enclosure or housing of MCD 100 supports a display 140. EX1005, Fig. 1 (below), [0034].

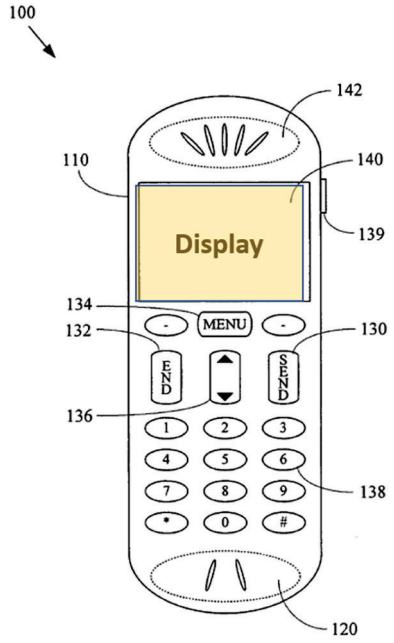

Figure 1

Further, Markel discloses that an electrode may be integrated or embedded into the touch screen of display 140 or 1500. EX1005, [0044], [0078]. The electrodes of Markel are "cardiac sensor[s] (e.g., one or more electrodes) … adapted to detect cardiac activity of a user." *Id.*, [0035]. An electrode incorporated into a display is shown in Fig. 15 below. *Id.*, Fig. 15.

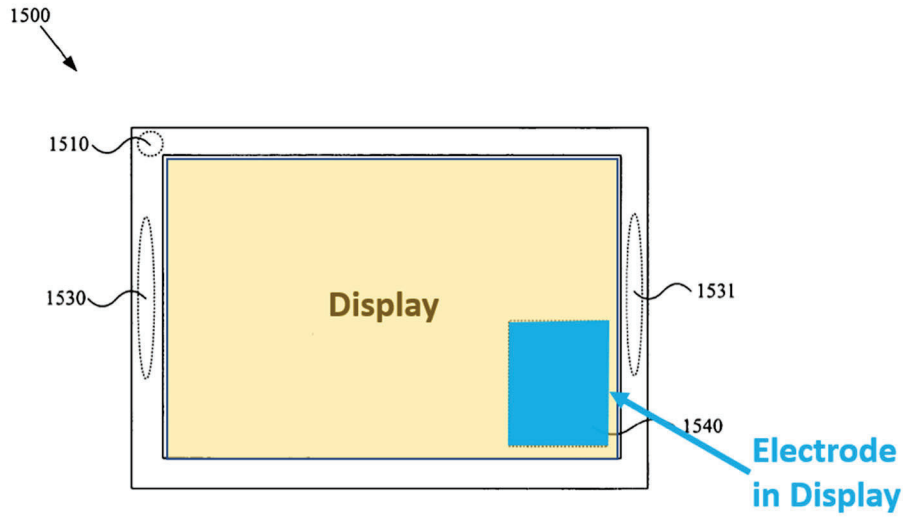

Figure 15

v. Limitation 15[c(iv)]: "wherein the second lead is configured to detect a second electrical signal of the user's cardiac signal via the user's contact with at least one of the second lead and the display screen of the electronic device"

122. Markel discloses that an electrode is integrated or embedded into a touch screen display. EX1005, [0044], [0078]. Markel further discloses that its electrodes can detect cardiac activity of a user "that is conductively coupled to the electrodes (e.g., by touching the electrodes)." *Id.*, [0035], [0068].

c. Limitation 15(d): "a processor coupled to the heart sensor to receive and process the detected cardiac signal"

123. Markel discloses an electronic device 2000 that may "comprise a cardiac information acquisition module 2010 [and] various cardiac sensors (e.g., electrodes) 2020, 2022, 2024." *Id.*, [0110]. According to Markel, such modules or sensors are utilized to acquire (receive) and process cardiac information from the

user of the electronic device. EX1005, [0110], [0111]. Indeed, as shown in annotated Fig. 20 below, the cardiac information acquisition module 2010 is coupled to the electrodes 2020, 2022, 2024 so as to receive and process the cardiac signals from such electrodes. *See also Id.*, [0088], [0096].

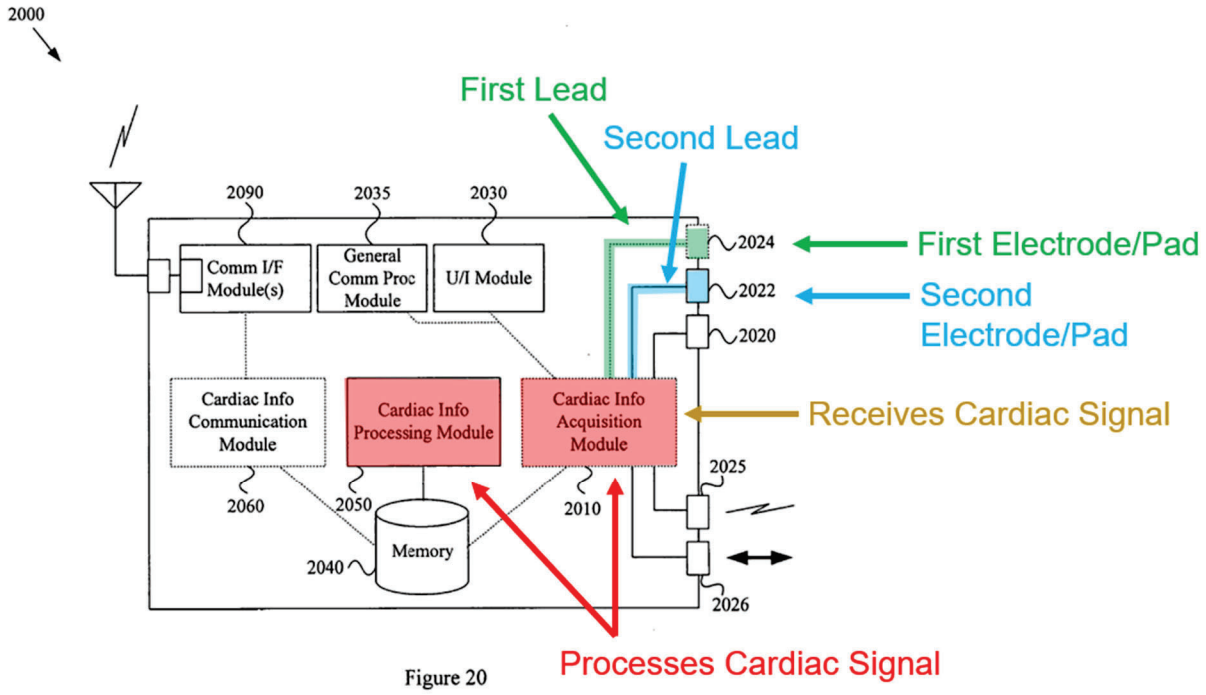

Figure 20

124. Mills similarly discloses that the housing 12 comprises a very-large scale integrated (VLSI) circuit chip that includes an "ECG signal and abnormal event detection circuitry, analog-to-digital (AD) and digital-to-analog (DA) conversion circuitry, memory and processor circuitry." EX1006, 2:1-8. Mills further specifies that the VLSI is surface-mounted on the top side of printed circuit board (PCB) 50. *Id.*, 5:18-19. Electrodes 14 and 16 are electrically connected to the PCB 50 via a

respective spring (60/62). *Id*., 4:55-5:3. Accordingly, the VLSI is a processor coupled to the heart sensor (electrodes) and is configured to receive and process the detected cardiac signal. As an alternative to the processing disclosed in Markel, it would have been obvious to use the internal componentry of Mills as a substitute as Mills provides more specific implementation details missing from Markel.

d. Claim 15 Conclusion

125. For the reasons set forth above, I believe a POSITA would have understood that Markel in combination with Mills teaches every limitation of Claim 15 of the '257 patent. I believe a POSITA would have found it obvious to combine the teachings of Mills with Markel and would have expected success in doing so.

13. Claim 16: "wherein the first lead is configured to detect the first electrical signal of the user's cardiac signal via the user's contact with the first lead"

126. Markel discloses that the electrodes can detect cardiac activity of a user "that is conductively coupled to the electrodes (e.g., by touching the electrodes)." EX1005, [0035], [0068]. Markel discloses, as shown in annotated Fig. 10 below, "a cardiac information acquisition module 1010 that is coupled to the first and second electrodes 1020, 1022 and utilizes the first and second electrodes 1020, 1022 to detect and acquire various cardiac (i.e., heart-related) signals from a user." EX1005, [0058], Fig. 10. A POSITA would understand from this disclosure that Markel

teaches a first lead configured to detect a first electrical signal of the user's cardiac signal from the user's contact with the first lead.

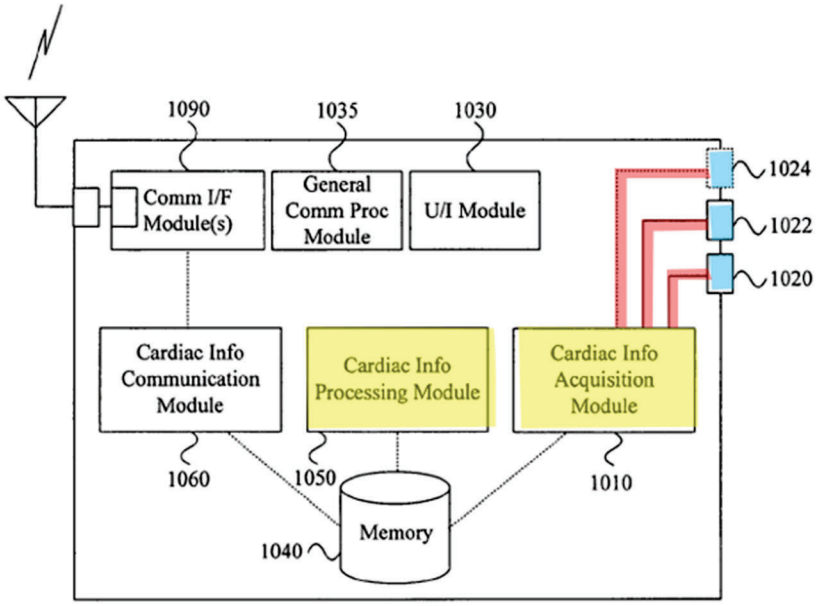

Figure 10

14. Claim 17: "wherein the second lead is configured to detect the second electrical signal of the user's cardiac signal via the user's contact with the second lead"

127. Markel discloses that the electrodes can detect cardiac activity of a user "that is conductively coupled to the electrodes (e.g., by touching the electrodes)." EX1005, [0035], [0068]. As in claim 16 above, Markel discloses, as shown in annotated Fig. 10 above, "a cardiac information acquisition module 1010 that is coupled to the first and second electrodes 1020, 1022 and utilizes the first and second electrodes 1020, 1022 to detect and acquire various cardiac (i.e., heart-related)

signals from a user." EX1005, [0058], Fig. 10. A POSITA would understand from this disclosure that Markel teaches a second lead configured to detect a second electrical signal of the user's cardiac signal from the user's contact with the second lead.

15. Claim 18: "wherein the second lead is configured to detect the second electrical signal of the user's cardiac signal via the user's contact with the display screen"

128. Markel discloses that an electrode is integrated or embedded into a touch screen display. EX1005, [0044], [0078]. Markel further discloses that its electrodes can detect cardiac activity of a user "that is conductively coupled to the electrodes (e.g., by touching the electrodes)." *Id.*, [0035], [0068].

16. Claim 19: "the first portion of the electronic device comprises a bezel of the enclosure; the electronic device further comprises a non-conductive component positioned between the bezel and the display screen for electrically isolating the first lead from the second lead"

129. Markel discloses that the device 100 includes a display 140. EX1005, [0034]. Markel discloses that an electrode may be disposed on a border of the display (*i.e.,* bezel). EX1005, [0044]. Markel further discloses an electrode may be disposed on a border of a display (*i.e.,* bezel) as shown in annotated Fig. 15 below. *Id.*, [0044]; *see also Id.*, [0078] ("The display device 1500 may, for example, comprise an electrode 1510 on a border portion of the display device 1500"). Markel also discloses "a first electrode 242 (e.g., a first conductive plastic region) and a second

electrode 244 (e.g., a second conductive plastic region) separated by an insulating portion 243 (e.g., non-conductive plastic)." EX1005, [0047]. A POSITA would understand the need for electrical isolation between leads the first and second lead using non-conductive materials for proper measurement of ECG signals.

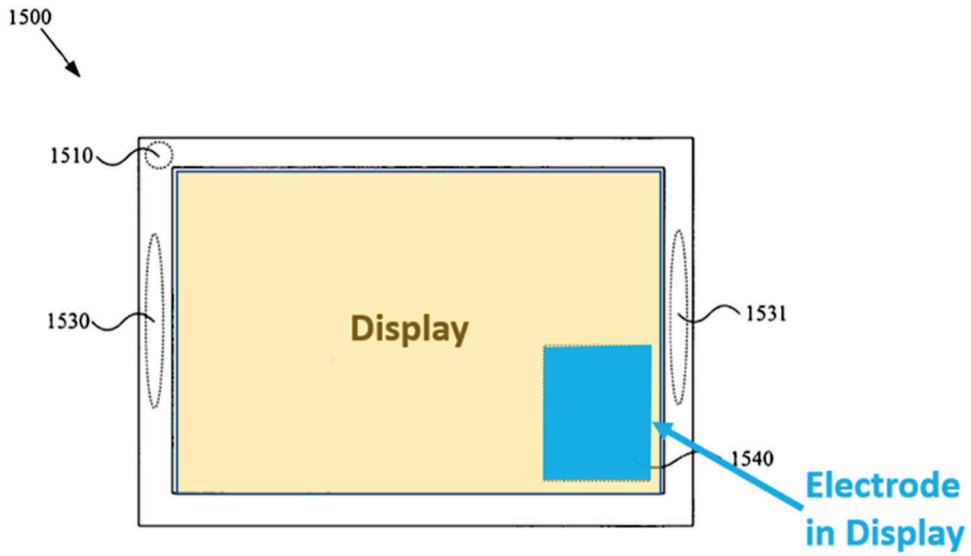

Figure 15

17. Claim 20: "wherein the first lead is configured to detect the first electrical signal of the user's cardiac signal via the user's contact with the first portion of the enclosure"

130. Markel discloses that the electrodes can detect cardiac activity of a user "that is conductively coupled to the electrodes (e.g., by touching the electrodes)." *Id.*, [0035], [0068]. Markel also discloses a first electrode "placed on or molded into the region 410b," a first portion of the enclosure, as shown in annotated Fig. 4 below. EX1005, [0045], Fig 4. Markel discloses, as discussed above in claim 16 and shown above in annotated Fig. 10, "a cardiac information acquisition module 1010 that is

coupled to the first and second electrodes 1020, 1022 and utilizes the first and second electrodes 1020, 1022 to detect and acquire various cardiac (i.e., heart-related) signals from a user." EX1005, [0058], Fig. 10. A POSITA would understand from this disclosure that Markel teaches a first lead configured to detect a first electrical signal of the user's cardiac signal from the user's contact with the first portion of the enclosure.

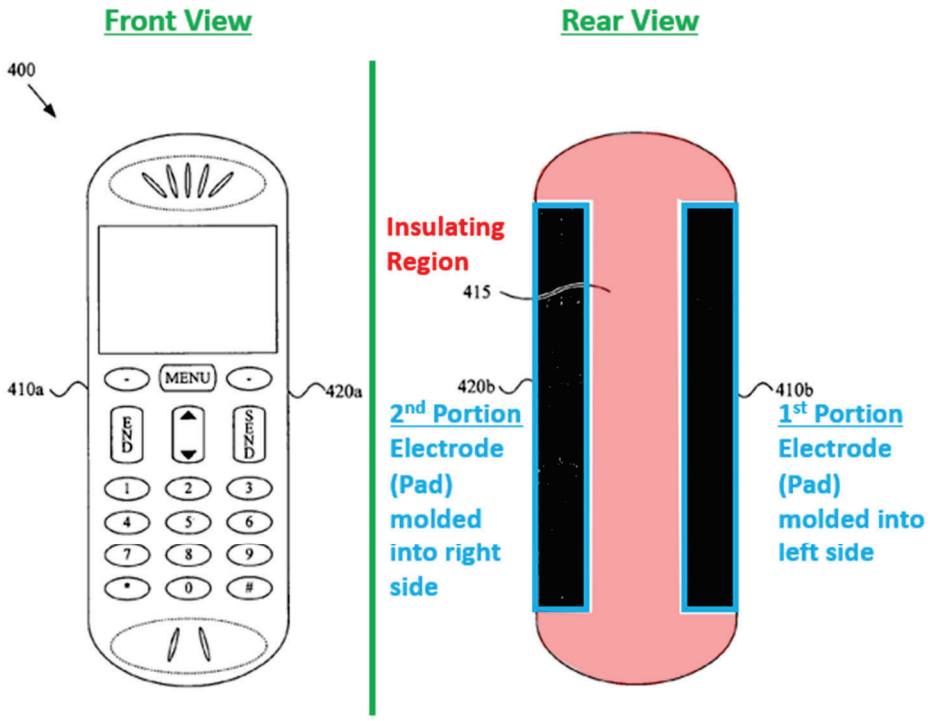

Figure 4

18. Claim 21: "wherein the second lead is configured to detect the second electrical signal of the user's cardiac signal via the user's contact with the second lead"

131. Markel discloses that the electrodes can detect cardiac activity of a user "that is conductively coupled to the electrodes (e.g., by touching the electrodes)."

Id., [0035], [0068]. Markel discloses, as shown in annotated Fig. 10 below, "a cardiac information acquisition module 1010 that is coupled to the first and second electrodes 1020, 1022 and utilizes the first and second electrodes 1020, 1022 to detect and acquire various cardiac (i.e., heart-related) signals from a user." EX1005, [0058], Fig. 10. A POSITA would understand from this disclosure that Markel teaches a second lead configured to detect a second electrical signal of the user's cardiac signal from the user's contact with the second lead.

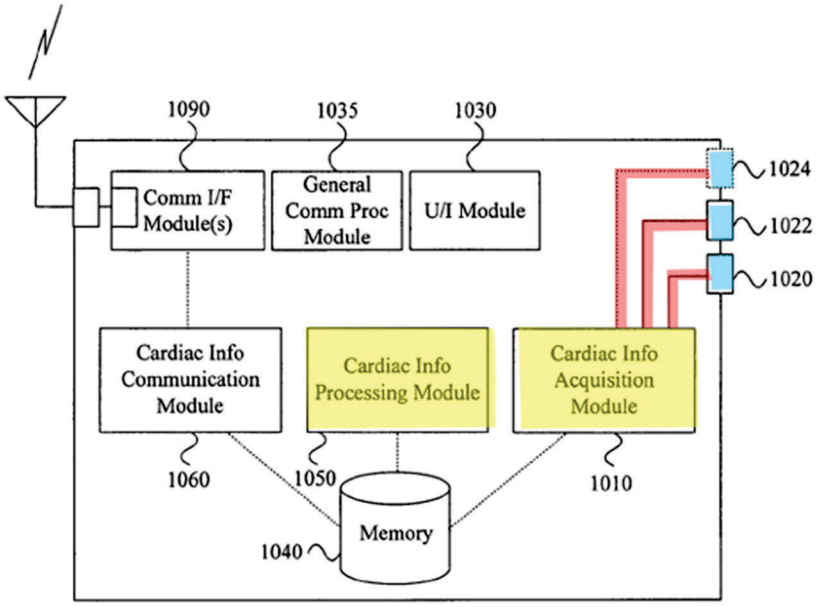

Figure 10

19. Claim 22: "wherein the second lead is configured to detect the second electrical signal of the user's cardiac signal via the user's contact with the display screen"

132. As discussed previously, Markel discloses that an electrode may be disposed on a video display device 140, in which the electrode is integrated into a touch screen display 140. EX1005, [0044], [0074], [0078]. Markel discloses that the electrodes can detect cardiac activity of a user "that is conductively coupled to the electrodes (e.g., by touching the electrodes)." *Id.*, [0035], [0068]. Markel discloses, as shown in annotated Fig. 10 above, "a cardiac information acquisition module 1010 that is coupled to the first and second electrodes 1020, 1022 and utilizes the first and second electrodes 1020, 1022 to detect and acquire various cardiac (i.e., heart-related) signals from a user." EX1005, [0058], Fig. 10. A POSITA would understand from this disclosure that Markel teaches a second lead configured to detect a second electrical signal of the user's cardiac signal from the user's contact with the display screen.

X. SECONDARY CONSIDERATIONS

133. I understand that secondary considerations of non-obviousness, such as commercial success, unexpected results, skepticism of others, long-felt-but-unmet need, etc., should be considered when evidence of such factors has been introduced. I am not aware of any evidence of secondary considerations. I reserve the right to respond to any evidence of secondary considerations introduced by Apple.

XI. CONCLUSION

134. For the foregoing reasons, it is my opinion that claims 1-4 and 8-22 of the ’257 patent would have been obvious to a POSITA at the relevant time in view of the prior art referenced above.

135. I declare that all statements made herein on my own knowledge are true and that all statements made on information and belief are believed to be true, and further, that these statements were made with the knowledge that willful false statements and the like so made are punishable by fine or imprisonment, or both, under Section 1001 of Title 18 of the United States Code.

Dated: March 17, 2023 By: Alan Oslan

Alan Oslan

57210062