QIAamp® DNA Mini Kit and QIAamp DNA Blood Mini Kit Handbook

For DNA purification from

Whole blood
Plasma
Serum
Buffy coat
Body fluids
Lymphocytes
Cultured cells
Tissue
Swabs
Dried blood spots

February 2003

Foresight EX1109
Foresight v Personalis
IPR2024-00170

© 1999–2003 QIAGEN, all rights reserved.

QIAGEN Worldwide

QIAGEN Companies

Australia	**QIAGEN Pty Ltd** ABN 75 072 382 944	PO Box 25 • Clifton Hill • Victoria 3068 Orders 03-9489-3666 • Fax 03-9489-3888 • Technical 1-800-243-066
Canada	**QIAGEN Inc.**	2800 Argentia Road • Unit 7 • Mississauga • Ontario • L5N 8L2 Orders 800-572-9613 • Fax 800-713-5951 • Technical 800-DNA-PREP (800-362-7737)
France	**QIAGEN S.A.**	3 avenue du Canada • LP 809 • 91974 COURTABOEUF CEDEX Orders 01-60-920-920 • Fax 01-60-920-925 • Technical 01-60-920-930
Germany	**QIAGEN GmbH**	QIAGEN Strasse 1 • 40724 Hilden Orders 02103-29-12000 • Fax 02103-29-22000 • Technical 02103-29-12400
Italy	**QIAGEN S.p.A.**	Via Grosio, 10/10 • 20151 Milano Orders 02-33430411 • Fax 02-33430426 • Technical 02-33430414
Japan www.qiagen.co.jp	**QIAGEN K.K.**	Forefront Tower II • 13-1, Kachidoki 3 Chome • Chuo-ku, Tokyo 104-0054 Telephone 03-5547-0811 • Fax 03-5547-0818 • Technical 03-5547-0811
Switzerland	**QIAGEN AG**	Auf dem Wolf 39 • 4052 Basel Orders 061-319-30-30 • Fax 061-319-30-33 • Technical 061-319-30-31
UK and Ireland	**QIAGEN Ltd.**	Boundary Court • Gatwick Road • Crawley • West Sussex, RH10 9AX Orders 01293-422-911 • Fax 01293-422-922 • Technical 01293-422-999
USA	**QIAGEN Inc.**	28159 Avenue Stanford • Valencia • CA 91355 Orders 800-426-8157 • Fax 800-718-2056 • Technical 800-DNA-PREP (800-362-7737)

www.qiagen.com

QIAGEN Distributors

Please see the last page for contact information for your local QIAGEN distributor.

Foresight EX1109
Foresight v Personalis
IPR2024-00170

Contents

Kit Contents **5**
Storage **6**
Equipment and Reagents to be Supplied by User **6**
Product Use Limitations **7**
Product Warranty and Satisfaction Guarantee **7**
Technical Assistance **7**
Safety Information **8**
Introduction **9**
Purification of viral RNA and DNA 9
Purification of DNA from urine 9
Purification of DNA from stool 10
Purification of high-molecular-weight DNA 10
Processing of large-volume samples 10
High-throughput sample processing 10
The QIAamp Procedure **11**
Amounts of starting material 11
Lysis with QIAGEN Protease or Proteinase K 12
Purification on QIAamp Spin Columns 12
Adsorption to the QIAamp membrane 12
Removal of residual contaminants 14
Elution of pure nucleic acids 14
Copurification of RNA 14
Elution mode for maximum yield or concentration 15
Determination of concentration, yield, and purity 17
Determination of DNA length 17
General comments 17
Processing QIAamp Mini Spin Columns on the QIAvac 24 **18**
QIAvac 24 Vacuum Manifold **19**
Handling Guidelines for the QIAvac 24 **20**
Processing QIAamp Mini Spin Columns on the QIAvac 6S **21**
QIAvac 6S Vacuum Manifold **22**
Handling Guidelines for the QIAvac 6S **23**

Foresight EX1109
Foresight v Personalis
IPR2024-00170

Important Notes Before Starting **24**
Preparation of Reagents 24
Handling of QIAamp Spin Columns 25
Spin protocol 25
Vacuum protocol 26
Centrifugation 26
Blood and Body Fluid Spin Protocol **27**
Preparation of buffy coat 29
Blood and Body Fluid Vacuum Protocol **30**
Tissue Protocol (QIAamp DNA Mini Kit only) **33**
Buccal Swab Spin Protocol **37**
Buccal Swab Vacuum Protocol **39**
Dried Blood Spot Protocol **41**
Troubleshooting Guide **43**
Appendix **49**
Protocols for:
Cultured cells 49
Fixed tissues 50
Bacteria 52
Yeast 54
Viral DNA 55
Eye, nasal, or pharyngeal swabs 56
Mitochondrial DNA from platelets 57
CSF and bone marrow on hematological slides 58
Crude cell lysates 59
Sample concentration 60
Ordering Information **61**
QIAGEN Distributors **67**

Foresight EX1109
Foresight v Personalis
IPR2024-00170

Kit Contents

	QIAamp® DNA Blood Mini Kits		QIAamp DNA Mini Kits	
Catalog no.	**51104**	**51106**	**51304**	**51306**
Number of preparations	50	250	50	250
QIAamp Spin Columns	50	250	50	250
Collection tubes (2 ml)	150	750	150	750
Buffer AL*	12 ml	54 ml	12 ml	54 ml
Buffer ATL	–	–	10 ml	50 ml
Buffer AW1* (concentrate)	19 ml	95 ml	19 ml	95 ml
Buffer AW2† (concentrate)	13 ml	66 ml	13 ml	66 ml
Buffer AE	12 ml	60 ml	22 ml	110 ml
QIAGEN® Protease	1 vial‡	1 vial§	–	–
Protease Solvent†	1.2 ml	5.5 ml	–	–
Proteinase K	–	–	1.25 ml	6 ml

** Contains chaotropic salt, which is an irritant. Take appropriate laboratory safety measures and wear gloves when handling. Not compatible with disinfecting agents containing bleach.*

† Contains sodium azide as a preservative. When working with chemicals, always wear a suitable lab coat, disposable gloves, and protective goggles. For more information, consult the appropriate material safety data sheets (MSDSs), available from the product supplier.

‡ Resuspension volume 1.2 ml

§ Resuspension volume 5.5 ml

Foresight EX1109
Foresight v Personalis
IPR2024-00170

Storage

QIAamp Spin Columns and buffers can be stored dry at room temperature (15–25°C) for up to 1 year without showing any reduction in performance.

Lyophilized QIAGEN Protease can be stored at room temperature (15–25°C) for up to 12 months without any decrease in performance. For storage longer than 12 months or if ambient temperatures constantly exceed 25°C, QIAGEN Protease should be stored dry at 2–8°C.

Reconstituted QIAGEN Protease is stable for 2 months when stored at 2–8°C. Keeping the QIAGEN Protease stock solution at room temperature for prolonged periods of time should be avoided. Storage at –20°C will prolong its life, but repeated freezing and thawing should be avoided. Dividing the solution into aliquots and storage at –20°C is recommended.

QIAamp DNA Mini Kits contains ready-to-use Proteinase K solution which is dissolved in a specially formulated storage buffer. The Proteinase K is stable for up to one year after delivery when stored at room temperature. To prolong the lifetime of Proteinase K, storage at 2–8°C is recommended.

Equipment and Reagents to be Supplied by User

- PBS (phosphate-buffered saline) may be required for some samples
- Ethanol (96–100%)
- 1.5 ml microcentrifuge tubes
- Pipet tips with aerosol barrier
- Microcentrifuge (with rotor for 2 ml tubes)
- Vacuum manifold (e.g., QIAvac 24 manifold; see Ordering Information, page 63)
- QIAamp Vac Accessory Set (see Ordering Information, page 63)
- Vacuum pump capable of producing a vacuum of –800 to –900 mbar (e.g., KNF Neuberger LABOPORT® type N 820 (optional) FT 18)
- Vacuum regulator, optional (see Ordering Information, page 63)
- RNase A (DNase-free; optional)
- Extension tubes (Buccal Swab Vacuum Protocol only; see Ordering Information, page 63)

Foresight EX1109
Foresight v Personalis
IPR2024-00170

Product Use Limitations

QIAamp Kits are intended as general-purpose devices. No claim or representation is intended for their use to identify any specific organism or for clinical use (diagnostic, prognostic, therapeutic, or blood banking). It is the user's responsibility to validate the performance of QIAamp Kits for any particular use, since the performance characteristics of these kits have not been validated for any specific organism. QIAamp Kits may be used in clinical diagnostic laboratory systems after the laboratory has validated their complete system as required by CLIA '88 regulations in the U.S. or equivalents in other countries.

All due care and attention should be exercised in the handling of the products. We recommend all users of QIAamp Kits to adhere to the NIH guidelines that have been developed for recombinant DNA experiments, or to other applicable guidelines.

Product Warranty and Satisfaction Guarantee

QIAGEN guarantees the performance of all products in the manner described in our product literature. The purchaser must determine the suitability of the product for its particular use. Should any product fail to perform satisfactorily due to any reason other than misuse, QIAGEN will replace it free of charge or refund the purchase price. We reserve the right to change, alter, or modify any product to enhance its performance and design. If a QIAGEN product does not meet your expectations, simply call your local Technical Service Department or distributor. We will credit your account or exchange the product — as you wish.

A copy of QIAGEN terms and conditions can be obtained on request, and is also provided on the back of our invoices. If you have questions about product specifications or performance, please call QIAGEN Technical Services or your local distributor (see inside front cover).

Technical Assistance

At QIAGEN we pride ourselves on the quality and availability of our technical support. Our Technical Service Departments are staffed by experienced scientists with extensive practical and theoretical expertise in molecular biology and the use of QIAGEN products. If you have any questions or experience any difficulties regarding QIAamp DNA Mini or QIAamp DNA Blood Mini Kits, or QIAGEN products in general, please do not hesitate to contact us.

QIAGEN customers are a major source of information regarding advanced or specialized uses of our products. This information is helpful to other scientists as well as to the researchers at QIAGEN. We therefore encourage you to contact us if you have any suggestions about product performance or new applications and techniques.

For technical assistance and more information please call one of the QIAGEN Technical Service Departments or local distributors (see inside front cover).

Foresight EX1109
Foresight v Personalis
IPR2024-00170

Safety Information

When working with chemicals, always wear a suitable lab coat, disposable gloves, and protective goggles. For more information, please consult the appropriate material safety data sheets (MSDSs). These are available online in convenient and compact PDF format at **www.qiagen.com/ts/msds.asp** where you can find, view, and print the MSDS for each QIAGEN kit and kit components.

CAUTION: DO NOT add bleach or acidic solutions directly to the sample-preparation waste.

The sample-preparation waste contains guanidine hydrochloride from Buffers AL and AW1, which can form highly reactive compounds when combined with bleach.

If liquid containing these buffers is spilt, clean with suitable laboratory detergent and water. If the spilt liquid contains potentially infectious agents, clean the affected area first with laboratory detergent and water, and then with 1% (v/v) sodium hypochlorite.

The following risk and safety phrases apply to components of the QIAamp DNA Mini and QIAamp DNA Blood Mini Kits:

Buffers AW1 and AL

Contain guanidine hydrochloride: harmful, irritant. Risk and safety phrases:* R22-36/38, S13-26-36-46

Proteinase K (QIAamp DNA Mini Kit only)

Sensitizer, irritant. Risk and safety phrases:* R36/37/38-42/43 S23-24-26-36/37

QIAGEN Protease (QIAamp DNA Blood Mini Kit only)

Contains subtilisin: sensitizer, irritant. Risk and safety phrases:* R37/38-41-42, S22-24-26-36/37/39-46

24-hour emergency information

Emergency medical information can be obtained 24 hours a day from:

Poison Information Center Mainz, Germany

Tel.: +49-6131-19240

** R22: Harmful if swallowed; R36/38: Irritating to eyes and skin; R36/37/38: Irritating to eyes, respiratory system and skin; R37/38: Irritating to respiratory system and skin; R41: Risk of serious damage to eyes; R42: May cause sensitization by inhalation; R42/43: May cause sensitization by inhalation and skin contact; S13: Keep away from food, drink and animal feed; S22: Do not breathe dust; S23: Do not breathe vapor; S24: Avoid contact with skin; S26: In case of contact with eyes, rinse immediately with plenty of water and seek medical advice; S36: Wear suitable protective clothing; S36/37: Wear suitable protective clothing and gloves; S36/37/39: Wear suitable protective clothing, gloves, and eye/face protection; S46: If swallowed, seek medical advice immediately and show this container or label.*

Foresight EX1109
Foresight v Personalis
IPR2024-00170

Introduction

QIAamp DNA Mini and QIAamp DNA Blood Mini Kits provide fast and easy methods for purification of total DNA for reliable PCR and Southern blotting. Total DNA (e.g., genomic, viral, mitochondrial) can be purified from whole blood, plasma, serum, buffy coat, bone marrow, other body fluids, lymphocytes, cultured cells, tissue, and forensic specimens.

The simple QIAamp spin and vacuum procedures, which are ideal for simultaneous processing of multiple samples, yield pure DNA ready for direct amplification in just 20 minutes. The QIAamp procedure is suitable for use with fresh or frozen whole blood and blood which has been treated with citrate, heparin, or EDTA. Prior separation of leukocytes is not necessary. Purification requires no phenol/chloroform extraction or alcohol precipitation, and involves very little handling. DNA is eluted in Buffer AE or water, ready for direct addition to PCR or other enzymatic reactions. Alternatively, it can be safely stored at –20°C for later use. The purified DNA is free of protein, nucleases, and other contaminants or inhibitors.

DNA purified using QIAamp Kits is up to 50 kb in size, with fragments of approximately 20–30 kb predominating. DNA of this length denatures completely during thermal cycling and can be amplified with high efficiency.

Purification of viral RNA and DNA

For purification of viral RNA, the QIAamp Viral RNA Mini Kit is recommended. All buffers and components of this kit are guaranteed to be RNase free. QIAamp DNA Mini or QIAamp DNA Blood Mini Kits can also be used to purify viral RNA, but are not manufactured under RNase-free conditions and will not provide optimal yields. Since cellular RNA copurifies with viral RNA, cell-free samples (e.g., plasma, serum) are necessary to obtain pure viral RNA.

Purification of viral DNA is optimal with QIAamp DNA Mini or QIAamp DNA Blood Mini Kits. Since cellular DNA copurifies with viral DNA, cell-free samples (e.g., plasma, serum) are necessary to obtain pure viral DNA. For preparation of DNA from free viral particles in fluids or suspensions (other than urine) using the Blood and Body Fluid protocols, we recommend the addition of 1 µl of an aqueous solution containing 5–10 µg of carrier DNA (e.g., poly dA, poly dT, poly dA:dT) to 200 µl Buffer AL. To ensure binding conditions are optimal, increase the volume of ethanol added at step 6 from 200 µl to 230 µl. Elution should be in 60 µl Buffer AE.

Purification of DNA from urine

For preparation of cellular, bacterial, or viral DNA from urine, the QIAamp Viral RNA Mini Kit is recommended. Buffer AVL supplied with this kit is optimized to inactivate the numerous PCR inhibitors found in urine.

Foresight EX1109
Foresight v Personalis
IPR2024-00170

Purification of DNA from stool

The QIAamp DNA Stool Mini Kit is recommended for preparation of DNA from stool. Stool samples typically contain many compounds that can degrade DNA and inhibit downstream enzymatic reactions. The QIAamp DNA Stool Mini Kit removes these substances through the action of a proprietary reagent that efficiently adsorbs inhibitors, together with a lysis buffer that provides optimized conditions for inhibitor removal.

Purification of high-molecular-weight DNA

To purify high-molecular-weight DNA, larger than the 50 kb achieved with QIAamp Kits, we recommend QIAGEN Genomic-tips (or ready-to-use Blood and Cell Culture DNA Kits, which contain QIAGEN Genomic-tips). QIAGEN Genomic-tips are available for purification of up to 500 µg of genomic DNA from blood, cultured cells, tissue, yeast, and Gram-negative bacteria. The highly pure DNA prepared with QIAGEN Genomic-tips is free of all contaminants and ranges in size up to 150 kb. It is ideally suited for use in Southern blotting, library construction, genome mapping, and other demanding applications.

Processing of large-volume samples

To purify large quantities of genomic DNA from large volumes of blood (up to 10 ml), we recommend QIAamp DNA Blood Midi or Maxi Kits.

High-throughput sample processing

Please contact QIAGEN for detailed information on high-throughput QIAamp systems.

Please take a few moments to read this handbook carefully before beginning your preparation. The information in "Important Notes Before Starting", beginning on page 24, is particularly important.

Foresight EX1109
Foresight v Personalis
IPR2024-00170

The QIAamp Procedure

QIAamp DNA Mini and QIAamp DNA Blood Mini Kits are designed for rapid purification of an average of 6 µg of total DNA (e.g., genomic, viral, mitochondrial) from 200 µl of whole human blood, and up to 50 µg of DNA from 200 µl of buffy coat, 5 x 10^6 lymphocytes, or cultured cells that have a normal set of chromosomes. The procedure is suitable for use with whole blood treated with citrate, heparin, or EDTA; buffy coat; lymphocytes; plasma; serum; and body fluids. Samples may be either fresh or frozen. For larger volumes of whole blood or cultured cells we recommend using QIAamp DNA Blood Midi or Maxi Kits.

The QIAamp DNA Mini Kit performs all the functions of the QIAamp DNA Blood Mini Kit, and also allows rapid purification of DNA from solid tissue. On average, up to 30 µg of DNA can be purified from 25 mg of various human tissues.

Amounts of starting material

Use the following amounts of starting material:

Table 1. Amounts of starting material for QIAamp Mini procedures

Sample	Amount
Blood, plasma, serum	200 µl
Buffy coat	200 µl
Tissue	25 mg*
Cells (diploid)	5 x 10^6 cells

** When isolating DNA from spleen, 10 mg samples should be used.*

Small samples should be adjusted to 200 µl with PBS before loading, while for samples larger than 200 µl, the amount of lysis buffer and other reagents added to the sample before loading must be increased proportionally (see note below). Application of the lysed sample to the QIAamp Spin Column will require more than one loading step if the initial sample volume is increased. The amounts of Buffer AW1 and Buffer AW2 used in the wash steps need not be increased.

Scaling up the tissue protocol is possible in principle. The volumes of Buffer ATL and Proteinase K used should be increased proportionally, while the volumes of wash and elution buffers should remain constant. The user should determine the maximum amount of tissue used. It is important not to overload the column, as this can lead to significantly lower yields than expected.

Note: All QIAamp buffers can be purchased separately to supplement the QIAamp DNA Mini and QIAamp DNA Blood Mini Kits (see Ordering Information, page 62). QIAGEN Proteinase K is recommended for use with tissue samples. QIAGEN Protease is suitable for genomic DNA preparation from blood, cells, and body fluids.

Foresight EX1109
Foresight v Personalis
IPR2024-00170

Lysis with QIAGEN Protease or Proteinase K

QIAamp DNA Blood Mini Kits contain QIAGEN Protease. Intensive research has shown that QIAGEN Protease is the optimal enzyme for use with the lysis buffer provided in the QIAamp DNA Blood Mini Kit. QIAGEN Protease is completely free of DNase and RNase activity.

When using the QIAamp DNA Blood Mini Kit for a sample that requires a modified protocol, please contact our Technical Service Department for advice about whether your lysis conditions are compatible with QIAGEN Protease. When >8 mM EDTA is used in conjunction with >0.5% SDS, QIAGEN Protease activity decreases. For samples that require an SDS-containing lysis buffer or that contain high levels of EDTA, the QIAamp DNA Mini Kit is recommended. The QIAamp DNA Mini Kit contains Proteinase K, which is the enzyme of choice for SDS-containing lysis buffers used in the Tissue Protocol, but which performs equally well in the Blood and Body Fluid Protocol. The activity of the Proteinase K solution is 600 mAU/ml solution (or 40 mAU/mg protein). This activity provides optimal results in QIAamp protocols.

Purification on QIAamp Spin Columns

The QIAamp DNA purification procedure comprises four steps and is carried out using QIAamp Spin Columns in a standard microcentrifuge or on a vacuum manifold. Both spin and vacuum procedures are designed to ensure that there is no sample-to-sample cross-contamination and allow safe handling of potentially infectious samples.

QIAamp Spin Columns fit into most standard microcentrifuge tubes. In the spin protocol, due to the volume of filtrate, 2 ml collection tubes (provided) are required to support the QIAamp Spin Column during loading and wash steps. For the vacuum protocol, a vacuum manifold (e.g., QIAvac 24 manifold; see Ordering Information, page 63) and a vacuum pump capable of producing a vacuum of –800 to –900 mbar (e.g., KNF Neuberger LABOPORT type N 840.3 FT 18) are required. Eluted DNA can be collected in standard 1.5 ml microcentrifuge tubes (not provided).

Adsorption to the QIAamp membrane

The lysate buffering conditions are adjusted to allow optimal binding of the DNA to the QIAamp membrane before the sample is loaded onto the QIAamp Spin Column. DNA is adsorbed onto the QIAamp silica-gel membrane during a brief centrifugation or vacuum step. Salt and pH conditions in the lysate ensure that protein and other contaminants, which can inhibit PCR and other downstream enzymatic reactions, are not retained on the QIAamp membrane. If the initial sample volume is larger than 200 µl, it will be necessary to load the lysate onto the QIAamp Spin Column in several steps. If larger sample volumes are required, we suggest using QIAamp DNA Blood Midi or Maxi Kits (Midi: 1–2 ml; Maxi: 5–10 ml starting material).

Foresight EX1109
Foresight v Personalis
IPR2024-00170

The QIAamp DNA Blood Mini Spin and Vacuum Procedures

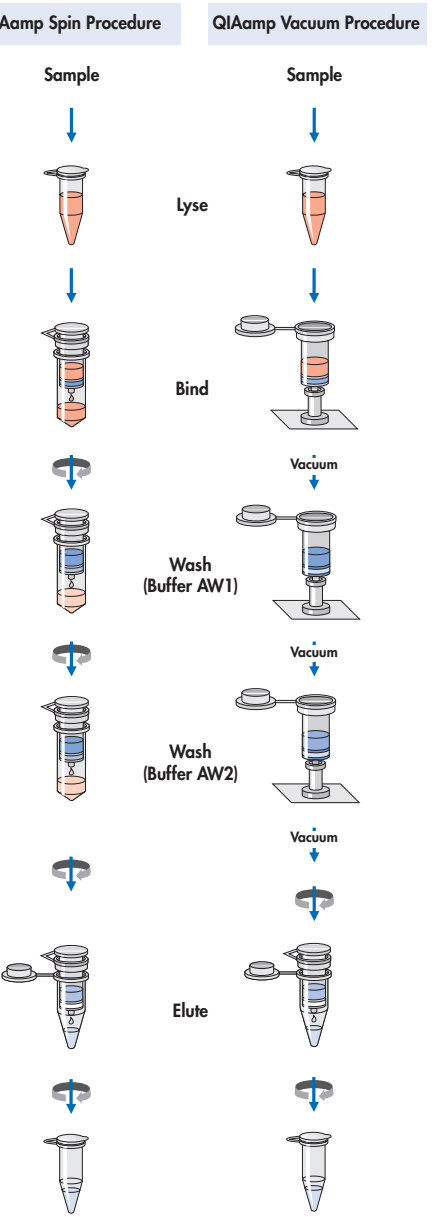

Foresight EX1109
Foresight v Personalis
IPR2024-00170

Removal of residual contaminants

DNA bound to the QIAamp membrane is washed in two centrifugation or vacuum steps. The use of two different wash buffers, AW1 and AW2, significantly improves the purity of the eluted DNA. Wash conditions ensure complete removal of any residual contaminants without affecting DNA binding.

Elution of pure nucleic acids

Purified DNA is eluted from the QIAamp Spin Column in a concentrated form in either Buffer AE or water. Elution buffer should be equilibrated to room temperature (15–25°C) before it is applied to the column. Yields will be increased if the QIAamp Spin Column is incubated with the elution buffer at room temperature for 5 minutes before centrifugation. The eluted genomic DNA is up to 50 kb in length (predominantly 20–30 kb) and is suitable for direct use in PCR or Southern-blotting applications.

If the purified DNA is to be stored, elution in Buffer AE (10 mM Tris·Cl; 0.5 mM EDTA; pH 9.0) and storage at –20°C is recommended. DNA stored in water is subject to degradation by acid hydrolysis.

Copurification of RNA

QIAamp Spin Columns copurify DNA and RNA when both are present in the sample (see Table 2). RNA may inhibit some downstream enzymatic reactions but will not inhibit PCR. If RNA-free genomic DNA is required, 4 µl of an RNase A stock solution (100 mg/ml) should be added to the sample prior to the addition of Buffer AL. RNase A is not supplied with kits and should be purchased separately. Ensure that the RNase A used is completely free of DNase activity.

Table 2. Yields of nucleic acids purified from various sources with QIAamp Kits

Sample	Nucleic acid yield without RNase A treatment (µg)	DNA yield with RNase A treatment (µg)
Blood (200 µl)	4–12	4–12
Buffy coat (200 µl)	25–50	25–50
Cultured cells (5 x 10^6)	20–30	15–20
Liver (25 mg)	60–115	10–30
Brain (25 mg)	35–60	15–30
Lung (25 mg)	8–20	5–10
Heart (25 mg)	25–45	5–10
Kidney (25 mg)	40–85	15–30
Spleen (10 mg)	25–45	5–30

DNA was purified with QIAamp Kits following standard protocols.

Foresight EX1109
Foresight v Personalis
IPR2024-00170

Elution mode for maximum yield or concentration

The yield of genomic DNA depends on the sample type and the number of cells in the sample. Typically, a 200 µl sample of whole blood from a healthy individual will yield 3–12 µg of DNA. (If higher yields are required, use QIAamp DNA Blood Midi or QIAamp DNA Blood Maxi Kits with up to 2 ml or up to 10 ml blood, respectively.) For most whole blood samples, a single elution with 200 µl elution buffer is sufficient. Samples with elevated white blood cell (WBC) counts, ranging from 1×10^7 to 1.5×10^7 cells/ml, will yield between 13 and 20 µg of DNA. If such a sample is loaded onto the column, approximately 80% of the DNA will elute in the first 200 µl, and up to 20% more in the next 200 µl. In samples with WBC counts exceeding 1.5×10^7 cells/ml, up to 60% of the DNA will elute in the first 200 µl and up to 70% of the remaining material in each subsequent 200 µl (see Table 3, page 16). Elution into a fresh tube is recommended to prevent dilution of the first eluate. More than 200 µl should not be eluted into a 1.5 ml microcentrifuge tube because the spin column will contact the eluate, leading to possible aerosol formation of samples during centrifugation. Eluting in 4 x 100 µl instead of 2 x 200 µl does not increase elution efficiency. In all cases, a single elution with 200 µl of elution buffer will provide sufficient DNA to perform multiple amplification reactions.

For some downstream applications, concentrated DNA may be required. Elution with volumes of less than 200 µl increases the final DNA concentration in the eluate significantly but slightly reduces overall DNA yield (see Table 4, page 16). For samples containing <3 µg of DNA, eluting the DNA in 100 µl is recommended. For samples containing less than 1 µg of DNA, only one elution in 50 µl Buffer AE or water is recommended.

Foresight EX1109
Foresight v Personalis
IPR2024-00170

Table 3. Total nucleic acid yields with QIAamp Kits using successive elutions

		Yield (µg)			
Sample	**Amount**	**Elution 1**	**Elution 2**	**Elution 3**	**Total**
Whole blood	200 µl	3–8	1–2	0–2	4–12
Lymphocytes	5×10^6 cells/200 µl	13–18	5–8	3–5	20–30
Buffy coat	200 µl	15–25	8–15	5–10	28–50
Liver*	25 mg	25–45	25–45	10–25	60–115
Brain*	25 mg	20–30	10–20	5–10	35–60
Lung*	25 mg	5–10	2–6	1–4	8–20
Heart*	25 mg	15–25	8–15	2–5	25–45
Kidney*	25 mg	25–40	20–30	5–15	50–85
Spleen*	10 mg	15–25	8–15	2–5	25–45

DNA was purified with QIAamp Kits following standard protocols. Successive elutions were each performed with 200 µl Buffer AE.

** Results refer to the QIAamp DNA Mini Kit only.*

Table 4. Effect of elution volume on yield and concentration

Elution volume (µl)	Yield (µg)	Yield (%)	DNA concentration (ng/µl)
200	6.80	100	34.0
150	6.51	95	43.4
100	6.25	92	62.5
50	5.84	86	116.8

DNA was purified with QIAamp Kits following standard protocols. Average values obtained from 20 preparations are shown.

Foresight EX1109
Foresight v Personalis
IPR2024-00170

Determination of concentration, yield, and purity

DNA yield is determined from the concentration of DNA in the eluate, measured by absorbance at 260 nm. Absorbance readings at 260 nm should fall between 0.1 and 1.0 to be accurate. Sample dilution should be adjusted accordingly: for example, an eluate containing 25–50 ng DNA/µl (A_{260} = 0.5–1.0) should not be diluted with more than 4 volumes of buffer. Use elution buffer or water (as appropriate) to dilute samples and to calibrate the spectrophotometer. Measure the absorbance at 260 and 280 nm, or scan absorbance from 220–320 nm (a scan will show if there are other factors affecting absorbance at 260 nm). Both DNA and RNA are measured with a spectrophotometer; to measure only DNA, a fluorimeter must be used.

Purity is determined by calculating the ratio of absorbance at 260 nm to absorbance at 280 nm. Pure DNA has an A_{260}/A_{280} ratio of 1.7–1.9. DNA purified by the QIAamp procedure is free of protein and other contaminants that can inhibit PCR or other enzymatic reactions. The purified DNA can be used immediately or safely stored in Buffer AE at –20°C for later use.

Determination of DNA length

The precise length of genomic DNA can be determined by pulsed-field gel electrophoresis (PFGE) through an agarose gel. The DNA should be concentrated by alcohol precipitation and redissolved in approximately 30 µl TE buffer, pH 8.0, for at least 30 minutes at 60°C. Avoid drying the DNA pellet for more than 10 minutes at room temperature since over-dried genomic DNA is very difficult to redissolve. Load 3–5 µg DNA per well. Standard PFGE conditions are as follows:

1% agarose gel in 0.5x TBE electrophoresis buffer

Switch intervals: 5–40 s

Run time: 17 h

Voltage: 170 V

General comments

Use carrier DNA (e.g., poly dA, poly dT, poly dA:dT) when the sample is low-copy, i.e., when <10,000 copies are present. For preparation of DNA from free viral particles in fluids or suspensions (other than urine) using the Blood and Body Fluid protocols, we recommend the addition of 1 µl of an aqueous solution containing 5–10 µg of carrier DNA (e.g., poly dA, poly dT, poly dA:dT) to 200 µl Buffer AL. To ensure binding conditions are optimal, increase the volume of ethanol added at step 6 from 200 µl to 230 µl. Elution should be in 60 µl Buffer AE.

Foresight EX1109
Foresight v Personalis
IPR2024-00170

Processing QIAamp Mini Spin Columns on the QIAvac 24

QIAamp Mini Spin Columns are processed on the QIAvac 24 using VacConnectors and VacValves. VacValves are inserted directly into the luer extensions of the QIAvac 24 manifold and ensure a steady flow rate, facilitating parallel processing of samples of different nature (e.g., whole blood and plasma), volumes, or viscosities. They should be used if sample flow rates differ significantly in order to ensure consistent vacuum. VacConnectors are disposable connectors that fit between the QIAamp Mini Spin Columns and the VacValves. They prevent direct contact between the spin columns and the VacValves during purification, avoiding any cross contamination between samples. VacConnectors are discarded after single use.

For processing QIAamp Mini Spin Columns on the QIAvac 24 using VacConnectors and VacValves, set up the manifold as follows (see also Figure 1):

1. **Place the QIAvac 24 lid on top of the QIAvac 24 base. Make sure that the gasket fits tightly in the groove of the QIAvac 24. Connect the QIAvac 24 to a vacuum source, placing a vacuum trap between the manifold and the source.**
2. **Insert a VacValve into every second luer extension of the QIAvac 24 lid. Close unused luer extensions with luer caps.**

   Sample processing is most convenient if only 12 samples are processed in parallel (i.e., every second luer extension). VacValves should be used if flow rates of samples differ significantly to ensure consistent vacuum.
3. **Insert a VacConnector into each VacValve.**

   Perform this step directly before starting the purification to avoid exposure of VacConnectors to potential contaminants in the air.
4. **Place a QIAamp Mini Spin Column into each VacConnector on the manifold.**
5. **For nucleic acid purification follow instructions in the Blood and Body Fluid Vacuum Protocol (page 30). Discard the VacConnectors after use.**

   VacValves should be closed for sample loading, and opened just before the vacuum is switched on. Each VacValve can be closed individually when the sample is completely drawn through the spin column, allowing parallel processing of samples of different volumes or viscosities.
6. **After processing of samples, discard the liquid waste in the QIAvac 24 base appropriately, clean QIAvac 24 components with water, and either air-dry or dry with paper towels.**

   Note: Buffers AL and AW1 used in QIAamp procedures are not compatible with disinfecting agents containing bleach.

Foresight EX1109
Foresight v Personalis
IPR2024-00170

QIAvac 24 Vacuum Manifold

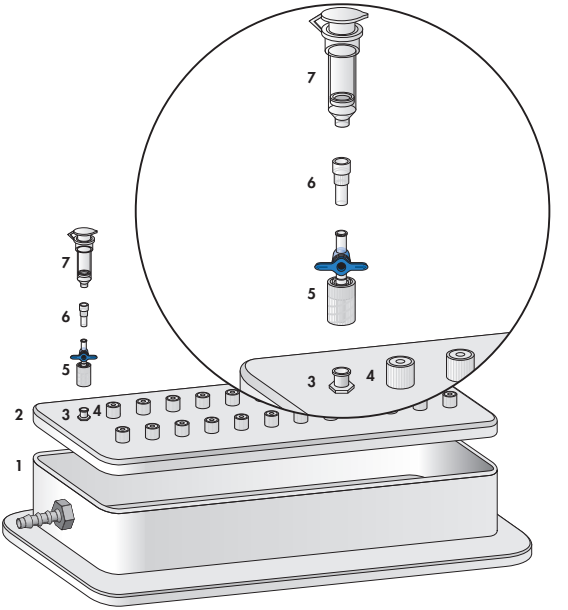

Figure 1. *Setting up the QIAvac 24 with QIAamp Mini Spin Columns using VacValves and VacConnectors.*

1. QIAvac 24 base
2. QIAvac 24 lid
3. Luer extension of QIAvac 24
4. Luer extension closed with luer cap
*5. VacValve**
*6. VacConnector**
7. QIAamp mini spin column†

** Not included with QIAvac 24. Must be purchased separately.*
† Not included with QIAvac 24. Included in appropriate kits.

Foresight EX1109
Foresight v Personalis
IPR2024-00170

Handling Guidelines for the QIAvac 24

- Always place the QIAvac 24 on a secure bench top or work area. If dropped, the QIAvac 24 manifold may crack.
- Always store the QIAvac 24 clean and dry. To clean, rinse all components with distilled water and allow to air-dry or dry with paper towels.
- The components of the QIAvac 24 are not resistant to certain solvents (Table 5). If these solvents are spilled on the unit, rinse it thoroughly with water.
- To ensure consistent performance, do not apply silicone or vacuum grease to any part of the QIAvac 24 manifold.
- Always use caution and wear safety glasses when working near a vacuum manifold under pressure.
- Contact QIAGEN Technical Services or your local distributor for information concerning spare or replacement parts.

Table 5. Chemical resistance properties of the QIAvac 24 manifold

Resistant to:		Not resistant to:
Chlorine bleach	Acetone	Phenol
Hydrochloric acid	Chromic acid	Benzene
Sodium chloride	Concentrated alcohols	Chloroform
Sodium hydroxide	Chaotropic salts	Ethers
Urea	SDS	Toluene
Acetic acid	Tween® 20	

Foresight EX1109
Foresight v Personalis
IPR2024-00170

Processing QIAamp Mini Spin Columns on the QIAvac 6S

For processing QIAamp Mini Spin Columns on the QIAvac 6S, set up the manifold as follows (see also Figure 2):

1. **Place the waste tray inside the QIAvac base and connect the base to the vacuum pump.**
2. **Open the lid of the top plate by pressing on the lower part of the spring lock while simultaneously lifting the front edge of the flip-up lid.**

   A slight backward movement of the lid before lifting may facilitate release from the lock mechanism.
3. **Insert up to 6 Luer Adapters into the slots of the top plate.**

   Close unused wells of the Luer Adapters with plugs. Ensure that Luer Adapters are properly seated on the foam gasket.
4. **Place blanks in any unused slots.**

   The blanks are conveniently stored under the base of the QIAvac 6S when not in use. Do not store the blanks in the slots of the top plate as this can cause deformation of the gasket.
5. **Close the lid of the top plate and place the top plate over the base. Ensure that the front clasp locks securely so that the unit will seal under vacuum.**
6. **Insert a VacConnector into every second luer connector of the Luer Adapters on the QIAvac 6S immediately before starting the protocol. Insert a QIAamp Mini Spin Column into each VacConnector on the manifold.**

   VacConnectors are available as accessories (see Ordering Information, page 63). They are disposable connectors that fit between the outlet nozzles of QIAamp Spin Columns and the Luer Adapters. They prevent direct contact between the spin columns and luer connectors during purification, avoiding cross contamination between samples. Sample processing is most convenient if only 12 samples are processed in parallel (i.e., every second luer connector). VacConnectors are discarded after single use.

Foresight EX1109
Foresight v Personalis
IPR2024-00170

QIAvac 6S Vacuum Manifold

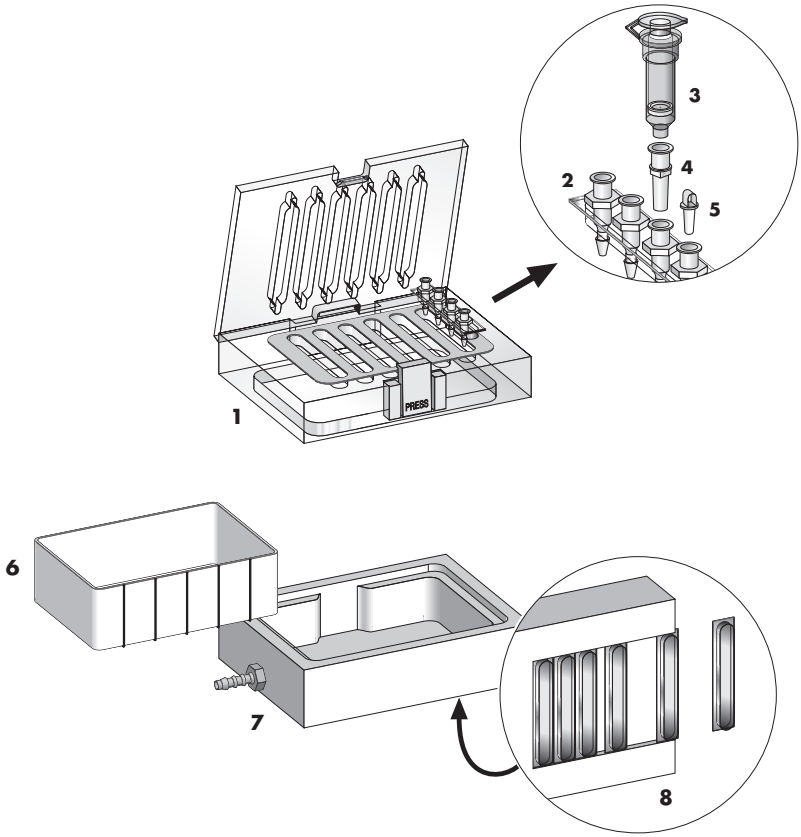

Figure 2. *Exploded diagram of QIAvac 6S manifold and components.*

1. QIAvac top plate with slots for QIAvac Luer Adapters
*2. QIAvac Luer Adapter**
3. QIAamp mini spin column
*4. VacConnector**
*5. Plug to seal unused luer connectors**
6. Waste tray
7. QIAvac base, which can hold a waste tray
8. Blanks to seal unused slots

** Not included — must be purchased separately*

Foresight EX1109
Foresight v Personalis
IPR2024-00170

Handling Guidelines for the QIAvac 6S

The QIAvac 6S vacuum manifold facilitates DNA purification with QIAamp DNA Mini and QIAamp DNA Blood Mini Kits. In combination with QIAvac Luer Adapters and VacConnectors, it allows easy processing of QIAamp mini spin columns. The following recommendations should be followed when handling the QIAvac 6S vacuum manifold:

- Always store the QIAvac 6S vacuum manifold clean and dry. To clean, rinse all components with water and dry with paper towels. Do not air-dry, as the screws may rust. Do not use abrasives or solvents.
- Always place the QIAvac 6S vacuum manifold on a secure bench top or work area. If dropped, the manifold may crack.
- The components of QIAvac manifolds are not resistant to ethanol, methanol, or other organic solvents (Table 6). Do not bring solvents into contact with the vacuum manifold. If solvents are spilled on the unit, rinse thoroughly with distilled water. Do not incubate acrylic components in alcohol-containing reagents for long periods.
- To ensure consistent performance, **do not apply silicone or vacuum grease to any part of the QIAvac 6S manifold**. The spring lock on the top plate and the self-sealing gasket provide an airtight seal when vacuum is applied to the assembled unit. To maximize gasket lifetime, rinse the gasket free of salts and buffers after each use and dry with paper towels before storage.
- Use the blanks provided to close unused slots of the QIAvac 6S. Blanks are stored in the underside of the QIAvac base plate when not in use (Figure 2, page 22). Do not store blanks in slots of the QIAvac 6S top plate as this can cause deformation of the gasket.
- Always use caution and wear safety glasses when working near a vacuum manifold under pressure.
- If you have any questions regarding the performance or maintenance of your QIAvac manifold, please contact QIAGEN Technical Services or your local distributor.

Table 6. Chemical resistance properties of the QIAvac 6S manifold

Resistant to:	Not resistant to:	
Chlorine bleach (12%)	Acetic acid	Concentrated alcohols
Hydrochloric acid	Acetone	Ether
Sodium chloride	Benzene	Phenol
Sodium hydroxide	Chloroform	Toluene
Urea	Chromic acid	

Foresight EX1109
Foresight v Personalis
IPR2024-00170

Important Notes Before Starting

Preparation of reagents

1. **QIAGEN Protease stock solution (store at 2–8°C or –20°C)**

   When using the QIAamp DNA Blood Mini Kit (50), pipet 1.2 ml protease solvent* (nuclease-free water containing 0.04% sodium azide) into the vial containing lyophilized QIAGEN Protease, as indicated on the label. When using the QIAamp DNA Blood Mini Kit (250), pipet 5.5 ml protease solvent into the vial containing lyophilized QIAGEN Protease, as indicated on the label.

   Dissolved QIAGEN Protease is stable for up to 2 months when stored at 2–8°C. Storage at –20°C is recommended to prolong the life of QIAGEN Protease, but repeated freezing and thawing should be avoided. For this reason, storage of aliquots of QIAGEN Protease is recommended.

2. **Buffer AL† (store at room temperature, 15–25°C)**

   Mix Buffer AL thoroughly by shaking before use. Buffer AL is stable for 1 year when stored at room temperature.

   Note: Do not add QIAGEN Protease or Proteinase K directly to Buffer AL.

3. **Buffer AW1† (store at room temperature, 15–25°C)**

   Buffer AW1 is supplied as a concentrate. Before using for the first time, add the appropriate amount of ethanol (96–100%) as indicated on the bottle and in Table 7.

   Buffer AW1 is stable for 1 year when stored closed at room temperature.

Table 7. Preparation of Buffer AW1

Kit size	AW1 concentrate (ml)	Ethanol (ml)	Final volume (ml)
50	19	25	44
250	95	125	220

4. **Buffer AW2* (store at room temperature, 15–25°C)**

   Buffer AW2 is supplied as a concentrate. Before using for the first time, add the appropriate amount of ethanol (96–100%) to Buffer AW2 concentrate as indicated on the bottle and in Table 8, page 25.

   Buffer AW2 is stable for 1 year when stored closed at room temperature.

* *Contains sodium azide as a preservative. When working with chemicals, always wear a suitable lab coat, disposable gloves, and protective goggles. For more information, consult the appropriate material safety data sheets (MSDSs), available from the product supplier.*

† *Contains chaotropic salt, which is an irritant. Take appropriate laboratory safety measures and wear gloves when handling. Not compatible with disinfecting agents containing bleach.*

Foresight EX1109
Foresight v Personalis
IPR2024-00170

Table 8. Preparation of Buffer AW2

Kit size	AW2 concentrate (ml)	Ethanol (ml)	Final volume (ml)
50	13	30	43
250	66	160	226

Handling of QIAamp Spin Columns

Owing to the sensitivity of nucleic acid amplification technologies, the following precautions are necessary when handling QIAamp Spin Columns to avoid cross-contamination between sample preparations:

- Carefully apply the sample or solution to the QIAamp Spin Column. Pipet the sample into the QIAamp Spin Column without wetting the rim of the column.
- Change pipet tips between all liquid transfers. The use of aerosol-barrier pipet tips is recommended.
- Avoid touching the QIAamp membrane with the pipet tip.
- After all pulse-vortexing steps, briefly centrifuge the 1.5 ml microcentrifuge tubes to remove drops from the inside of the lid.
- Wear gloves throughout the entire procedure. In case of contact between gloves and sample, change gloves immediately.

Spin protocol

- Close the QIAamp Spin Column before placing it in the microcentrifuge. Centrifuge as described.
- Remove the QIAamp Spin Column and collection tube from the microcentrifuge. Place the QIAamp Spin Column in a new collection tube. Discard the filtrate and the collection tube. Note that the filtrate may contain hazardous waste and should be disposed of appropriately.
- Open only one QIAamp Spin Column at a time, and take care to avoid generating aerosols.
- For efficient parallel processing of multiple samples, fill a rack with collection tubes to which the QIAamp Spin Columns can be transferred after centrifugation. Used collection tubes containing the filtrate can be discarded, and the new collection tubes containing the QIAamp Spin Columns can be placed directly in the microcentrifuge.

Foresight EX1109
Foresight v Personalis
IPR2024-00170

Vacuum protocol

If using the QIAvac 24, see pages 18–20. If using the QIAvac 6S, see pages 21–23.

- The vacuum pressure is the pressure difference between the inside of the manifold and the atmosphere (standard atmospheric pressure 1013 millibar) and can be measured using a vacuum regulator (see Ordering Information on page 63). The vacuum protocol requires a vacuum pump capable of producing a vacuum of –800 to –900 mbar (e.g., KNF Neuberger LABOPORT type N 840.3 FT 18). Higher vacuum pressures must be avoided. Use of vacuum pressures lower than recommended may reduce DNA yield and purity.
- Switch off vacuum between steps to ensure that a consistent, even vacuum is applied during manipulations.
- Wear safety glasses when working near a manifold under pressure.
- Leave the lid of the QIAamp Spin Column open while applying vacuum.

Centrifugation

QIAamp Spin Columns will fit into most standard 1.5–2 ml microcentrifuge tubes. Additional 2 ml collection tubes are available separately.

Centrifugation of QIAamp Spin Columns is performed at 6000 x *g* (8000 rpm) in order to reduce centrifuge noise. Centrifuging QIAamp Spin Columns at full speed will not affect DNA yield. Centrifugation at lower speeds is also acceptable, provided that nearly all of each solution is transferred through the QIAamp membrane. When preparing DNA from buffy coat or lymphocytes, full-speed centrifugation is recommended to avoid clogging.

All centrifugation steps should be carried out at room temperature (15–25°C).

Foresight EX1109
Foresight v Personalis
IPR2024-00170

Blood and Body Fluid Spin Protocol

Notes:

- Equilibrate samples to room temperature (15–25°C).
- Heat a water bath or heating block to 56°C for use in step 4.
- Equilibrate Buffer AE or distilled water to room temperature for elution in step 10.
- Ensure that Buffer AW1, Buffer AW2, and QIAGEN Protease have been prepared according to the instructions on page 24.
- If a precipitate has formed in Buffer AL, dissolve by incubating at 56°C.
- All centrifugation steps should be carried out at room temperature.
- Use carrier DNA if the sample contains <10,000 genome equivalents (see page 9).
- 200 µl of whole blood yields 3–12 µg of DNA. Preparation of buffy coat (see page 29) is recommended if a higher yield is required.

1. **Pipet 20 µl QIAGEN Protease (or Proteinase K) into the bottom of a 1.5 ml microcentrifuge tube.**
2. **Add 200 µl sample to the microcentrifuge tube. Use up to 200 µl whole blood, plasma, serum, buffy coat, or body fluids, or up to 5 x 10^6 lymphocytes in 200 µl PBS.**

   If the sample volume is less than 200 µl, add the appropriate volume of PBS.

   QIAamp Spin Columns copurify RNA and DNA when both are present in the sample. RNA may inhibit some downstream enzymatic reactions, but not PCR. If RNA-free genomic DNA is required, 4 µl of an RNase A stock solution (100 mg/ml) should be added to the sample before addition of Buffer AL.

   Note: It is possible to add QIAGEN Protease (or Proteinase K) to samples that have already been dispensed into microcentrifuge tubes. In this case, it is important to ensure proper mixing after adding the enzyme.
3. **Add 200 µl Buffer AL to the sample. Mix by pulse-vortexing for 15 s.**

   In order to ensure efficient lysis, it is essential that the sample and Buffer AL are mixed thoroughly to yield a homogeneous solution.

   If the sample volume is larger than 200 µl, increase the amount of QIAGEN Protease (or Proteinase K) and Buffer AL proportionally; e.g., a 400 µl sample will require 40 µl QIAGEN Protease (or Proteinase K) and 400 µl Buffer AL. If sample volumes larger than 400 µl are required, use of QIAamp DNA Blood Midi or Maxi Columns is recommended; these can process up to 2 ml or up to 10 ml of sample, respectively.

   Note: Do not add QIAGEN Protease or Proteinase K directly to Buffer AL.

Foresight EX1109
Foresight v Personalis
IPR2024-00170

4. **Incubate at 56°C for 10 min.**

   DNA yield reaches a maximum after lysis for 10 min at 56°C. Longer incubation times have no effect on yield or quality of the purified DNA.

5. **Briefly centrifuge the 1.5 ml microcentrifuge tube to remove drops from the inside of the lid.**

6. **Add 200 µl ethanol (96–100%) to the sample, and mix again by pulse-vortexing for 15 s. After mixing, briefly centrifuge the 1.5 ml microcentrifuge tube to remove drops from the inside of the lid.**

   If the sample volume is greater than 200 µl, increase the amount of alcohol proportionally; e.g., a 400 µl sample will require 400 µl of alcohol.

7. **Carefully apply the mixture from step 6 to the QIAamp Spin Column (in a 2 ml collection tube) without wetting the rim, close the cap, and centrifuge at 6000 x *g* (8000 rpm) for 1 min. Place the QIAamp Spin Column in a clean 2 ml collection tube (provided), and discard the tube containing the filtrate.**

   Close each spin column in order to avoid aerosol formation during centrifugation.

   Centrifugation is performed at 6000 x *g* (8000 rpm) in order to reduce noise. Centrifugation at full speed will not affect the yield or purity of the DNA. If the lysate has not completely passed through the column after centrifugation, centrifuge again at higher speed until the QIAamp Spin Column is empty.

   Note: When preparing DNA from buffy coat or lymphocytes, centrifugation at full speed is recommended to avoid clogging.

8. **Carefully open the QIAamp Spin Column and add 500 µl Buffer AW1 without wetting the rim. Close the cap and centrifuge at 6000 x *g* (8000 rpm) for 1 min. Place the QIAamp Spin Column in a clean 2 ml collection tube (provided), and discard the collection tube containing the filtrate.**

   It is not necessary to increase the volume of Buffer AW1 if the original sample volume is larger than 200 µl.

9. **Carefully open the QIAamp Spin Column and add 500 µl Buffer AW2 without wetting the rim. Close the cap and centrifuge at full speed (20,000 x *g*; 14,000 rpm) for 3 min. Continue directly with step 10, or to eliminate any chance of possible Buffer AW2 carryover, perform step 9a, and then continue with step 10.**

   Note: Residual Buffer AW2 in the eluate may cause problems in downstream applications. Some centrifuge rotors may vibrate upon deceleration, resulting in the flow-through, which contains Buffer AW2, coming into contact with the QIAamp Spin Column. Removing the QIAamp Spin Column and collection tube from the rotor may also cause flow-through to come into contact with the QIAamp Spin Column. In these cases, the optional step 9a should be performed.

Foresight EX1109
Foresight v Personalis
IPR2024-00170

9a. **(Optional): Place the QIAamp Spin Column in a new 2 ml collection tube (not provided) and discard the collection tube with the filtrate. Centrifuge at 20,000 x *g* (14,000 rpm) for 1 min.**

10. **Place the QIAamp Spin Column in a clean 1.5 ml microcentrifuge tube (not provided), and discard the collection tube containing the filtrate. Carefully open the QIAamp Spin Column and add 200 µl Buffer AE or distilled water. Incubate at room temperature (15–25°C) for 1 min, and then centrifuge at 6000 x *g* (8000 rpm) for 1 min.**

    Incubating the QIAamp Spin Column loaded with Buffer AE or water for 5 min at room temperature before centrifugation generally increases DNA yield.

    A second elution step with a further 200 µl Buffer AE will increase yields by up to 15%.

    Volumes of more than 200 µl should not be eluted into a 1.5 ml microcentrifuge tube because the spin column will come into contact with the eluate, leading to possible aerosol formation during centrifugation.

    Elution with volumes of less than 200 µl increases the final DNA concentration in the eluate significantly, but slightly reduces the overall DNA yield (see Table 3, page 16). For samples containing less than 1 µg of DNA, elution in 50 µl Buffer AE or water is recommended. Eluting with 2 x 100 µl instead of 1 x 200 µl does not increase elution efficiency.

    For long-term storage of DNA, eluting in Buffer AE and storing at –20°C is recommended, since DNA stored in water is subject to acid hydrolysis.

    A 200 µl sample of whole human blood (~5 x 10^6 leukocytes/ml) typically yields 6 µg of DNA in 200 µl water (30 ng/µl) with an A_{260}/A_{280} ratio of 1.7–1.9.

For more information about elution and how to determine DNA yield, purity, and length, refer to pages 15–17.

Preparation of Buffy Coat

Buffy coat is a leukocyte-enriched fraction of whole blood. Preparing a buffy-coat fraction from whole blood is simple and yields approximately 5–10 times more DNA than an equivalent volume of whole blood.

Prepare buffy coat by centrifuging whole blood at 2500 x *g* for 10 min at room temperature. After centrifugation, three different fractions are distinguishable: the upper clear layer is plasma; the intermediate layer is buffy coat, containing concentrated leukocytes; and the bottom layer contains concentrated erythrocytes.

Foresight EX1109
Foresight v Personalis
IPR2024-00170

Blood and Body Fluid Vacuum Protocol

Things to do before starting:

- Equilibrate samples to room temperature (15–25°C).
- Heat a water bath or heating block to 56°C for use in step 4.
- Equilibrate Buffer AE or distilled water to room temperature for elution in step 11.
- Ensure that Buffer AW1, Buffer AW2, and QIAGEN Protease have been prepared according to the instructions on page 24.
- If a precipitate has formed in Buffer AL, dissolve by incubating at 56°C.
- All centrifugation steps should be carried out at room temperature.
- For setup of the QIAvac 24, see pages 18–20. For setup of the QIAvac 6S, see pages 21–23.
- Switch off vacuum between steps to ensure that a consistent, even vacuum is applied during protocol steps.
- Use carrier DNA if the sample contains <10,000 genome equivalents (see page 9).
- 200 µl of whole blood yields 3–12 µg of DNA.

1. **Pipet 20 µl QIAGEN Protease (or Proteinase K) into the bottom of a 1.5 ml microcentrifuge tube.**
2. **Add 200 µl sample to the microcentrifuge tube. Use up to 200 µl whole blood, plasma, serum, or body fluids, or up to 5 x 10^6 lymphocytes in 200 µl PBS.**

   If the sample volume is less than 200 µl, add the appropriate volume of PBS.

   QIAamp Spin Columns copurify RNA and DNA when both are present in the sample. RNA may inhibit some downstream enzymatic reactions, but not PCR. If RNA-free genomic DNA is required, 4 µl of an RNase A stock solution (100 mg/ml) should be added to the sample before addition of Buffer AL.

   Note: It is possible to add QIAGEN Protease (or Proteinase K) to samples that have already been dispensed into microcentrifuge tubes. In this case, it is important to ensure proper mixing after adding the enzyme.
3. **Add 200 µl Buffer AL to the sample. Mix by pulse-vortexing for 15 s.**

   In order to ensure efficient lysis, it is essential that the sample and Buffer AL are mixed thoroughly to yield a homogeneous solution.

   If the sample volume is larger than 200 µl, increase the amount of QIAGEN Protease (or Proteinase K) and Buffer AL proportionally; e.g., a 400 µl sample will require 40 µl QIAGEN Protease (or Proteinase K) and 400 µl Buffer AL. If sample volumes larger than 400 µl are required, use of QIAamp DNA Blood Midi or Maxi Columns is recommended; these can process up to 2 ml or up to 10 ml of sample, respectively.

   Note: Do not add QIAGEN Protease or Proteinase K directly to Buffer AL.

Foresight EX1109
Foresight v Personalis
IPR2024-00170

4. **Incubate at 56°C for 10 min.**

   DNA yield reaches a maximum after lysis for 10 min at 56°C. Longer incubation times have no effect on yield or quality of the purified DNA.

5. **Briefly centrifuge the 1.5 ml microcentrifuge tube to remove drops from the inside of the lid.**

6. **Add 200 µl ethanol (96–100%) to the sample, and mix again by pulse-vortexing for 15 s. After mixing, briefly centrifuge the 1.5 ml microcentrifuge tube to remove drops from the inside of the lid.**

   If the sample volume is greater than 200 µl, increase the amount of alcohol proportionally; e.g., a 400 µl sample will require 400 µl of alcohol.

7. **Insert the QIAamp Spin Column into the VacConnector on the QIAvac vacuum manifold. Carefully apply the mixture from step 6 to the QIAamp Spin Column without wetting the rim. Switch on the vacuum pump. Be sure to leave the lid of the QIAamp Spin Column open while applying vacuum. After all lysates have been drawn through the spin column, switch off the vacuum pump.**

   The collection tube from the blister pack can be saved for the centrifugation in step 10.

   If at this stage all of the solution has not passed through the membrane, place the QIAamp Spin Column into a clean 2 ml collection tube (provided), close the cap, and centrifuge at 6000 x *g* (8000 rpm) for 3 min or until all the liquid has completely passed through. Place the QIAamp Spin Column into another clean 2 ml collection tube, and discard the tube containing the filtrate. Continue with step 8 of the spin protocol on page 28.

8. **Apply 750 µl Buffer AW1 to the QIAamp Spin Column without wetting the rim. Leave the lid of the Spin Column open and switch on the vacuum pump. After all of Buffer AW1 has been drawn through the spin column, switch off the vacuum pump.**

9. **Add 750 µl Buffer AW2 without wetting the rim of the QIAamp Spin Column. Leave the lid of the spin column open and switch on the vacuum pump. After all of Buffer AW2 has been drawn through the spin column, switch off the vacuum pump.**

10. **Close the lid of the QIAamp Spin Column, remove it from the vacuum manifold, and discard the VacConnector. Place the QIAamp Spin Column into a clean 2 ml collection tube and centrifuge at 20,000 x *g* (14,000 rpm) for 1 min to dry the membrane completely.**

11. **Place the QIAamp Spin Column in a clean 1.5 ml microcentrifuge tube (not provided). Discard the collection tube containing the filtrate. Carefully open the QIAamp Spin Column. Add 200 µl Buffer AE or distilled water equilibrated to room temperature. Incubate at room temperature for 1 min, and then centrifuge at 6000 x *g* (8000 rpm) for 1 min.**

    Incubating the QIAamp Spin Column loaded with Buffer AE or water for 5 min at room temperature before centrifugation generally increases DNA yield.

Foresight EX1109
Foresight v Personalis
IPR2024-00170

A second elution step with a further 200 µl Buffer AE will increase yields by up to 15%.

Volumes of more than 200 µl should not be eluted into a 1.5 ml microcentrifuge tube because the spin column will come into contact with the eluate, leading to possible aerosol formation during centrifugation.

Elution with volumes of less than 200 µl increases the final DNA concentration in the eluate significantly, but slightly reduces overall DNA yield (see Table 4, page 16). For samples containing less than 1 µg of DNA, elution in 50 µl Buffer AE or water is recommended. Eluting with 2 x 100 µl instead of 1 x 200 µl does not increase elution efficiency.

For long-term storage of DNA, eluting in Buffer AE and storing at –20°C is recommended, since DNA stored in water is subject to acid hydrolysis.

A 200 µl sample of whole human blood (~5 x 10^6 leukocytes/ml) typically yields 6 µg of DNA in 200 µl water (30 ng/µl) with an A_{260}/A_{280} ratio of 1.7–1.9.

For more information about elution and how to determine DNA yield, purity, and length, refer to pages 15–17.

Foresight EX1109
Foresight v Personalis
IPR2024-00170

Tissue Protocol (QIAamp DNA Mini Kit only)

Things to do before starting:

- Equilibrate the sample to room temperature (15–25°C).
- Heat two water baths or heating blocks: one to 56°C for use in step 2, and one to 70°C for use in step 3.
- Equilibrate Buffer AE or distilled water to room temperature for elution in step 8.
- Ensure that Buffers AW1 and AW2 have been prepared according to the instructions on page 24.
- If a precipitate has formed in Buffer ATL or Buffer AL, dissolve by incubating at 56°C.
- All centrifugation steps should be carried out at room temperature.
- Use carrier DNA if the sample contains <10,000 genome equivalents (see page 9).
- Avoid repeated freezing and thawing of stored samples, since this leads to reduced DNA size.

Transcriptionally active tissues, such as liver and kidney, contain high levels of RNA which will copurify with genomic DNA. RNA may inhibit some downstream enzymatic reactions, but will not inhibit PCR. If RNA-free genomic DNA is required, replace step 3a with step 3b in the protocol.

The QIAamp procedure requires no mechanical disruption of the tissue sample, but lysis time will be reduced if the sample is ground in liquid nitrogen or mechanically homogenized in advance.

Liquid nitrogen:

Transfer the powder derived from 25 mg of tissue (10 mg spleen) to a 1.5 ml microcentrifuge tube, and add 180 µl of Buffer ATL. Proceed with step 2 of this protocol.

Mechanical homogenizer (e.g., Ultra Turrax®, Polytron®):

Add 25 mg of tissue (10 mg spleen) to a 1.5 ml microfuge tube containing no more than 80 µl PBS. Homogenize the sample, add 100 µl Buffer ATL, and proceed with step 2 of this protocol. Some tissues require undiluted Buffer ATL for complete lysis. In this case, grinding in liquid nitrogen is recommended. Samples cannot be homogenized directly in Buffer ATL, which contains detergent.

1. **Cut up to 25 mg of tissue (up to 10 mg spleen) into small pieces, place in a 1.5 ml microcentrifuge tube, and add 180 µl of Buffer ATL.**

   It is important to cut the tissue into small pieces to decrease lysis time.

   If DNA is prepared from spleen tissue, no more than 10 mg should be used.

   The yield of DNA will depend on both the amount and the type of tissue processed. 1 mg of tissue will yield approximately 0.2–1.2 µg of DNA.

   2 ml microcentrifuge tubes are better suited for lysis.

Foresight EX1109
Foresight v Personalis
IPR2024-00170

2. **Add 20 µl Proteinase K, mix by vortexing, and incubate at 56°C until the tissue is completely lysed. Vortex occasionally during incubation to disperse the sample, or place in a shaking water bath or on a rocking platform.**

   Note: Proteinase K must be used. QIAGEN Protease has reduced activity in the presence of Buffer ATL.

   Lysis time varies depending on the type of tissue processed. Lysis is usually complete in 1–3 h. Lysis overnight is possible and does not influence the preparation. In order to ensure efficient lysis, a shaking water bath or a rocking platform should be used. If not available, vortexing 2–3 times per hour during incubation is recommended.

3. **Briefly centrifuge the 1.5 ml microcentrifuge tube to remove drops from the inside of the lid. Continue with step 3a, or if RNA-free genomic DNA is required, continue with step 3b.**

   Transcriptionally active tissues, such as liver and kidney, contain high levels of RNA which will copurify with genomic DNA. RNA may inhibit some downstream enzymatic reactions, but will not inhibit PCR.

3a. **Add 200 µl Buffer AL to the sample, mix by pulse-vortexing for 15 s, and incubate at 70°C for 10 min. Briefly centrifuge the 1.5 ml microcentrifuge tube to remove drops from inside the lid.**

   It is essential that the sample and Buffer AL are mixed thoroughly to yield a homogeneous solution.

   A white precipitate may form on addition of Buffer AL, which in most cases will dissolve during incubation at 70°C. The precipitate does not interfere with the QIAamp procedure, or with any subsequent application.

OR

3b. **First add 4 µl RNase A (100 mg/ml), mix by pulse-vortexing for 15 s, and incubate for 2 min at room temperature. Briefly centrifuge the 1.5 ml microcentrifuge tube to remove drops from inside the lid before adding 200 µl Buffer AL to the sample. Mix again by pulse-vortexing for 15 s, and incubate at 70°C for 10 min. Briefly centrifuge the 1.5 ml microcentrifuge tube to remove drops from inside the lid.**

   It is essential that the sample and Buffer AL are mixed thoroughly to yield a homogeneous solution.

   A white precipitate may form on addition of Buffer AL. In most cases it will dissolve during incubation at 70°C. The precipitate does not interfere with the QIAamp procedure or with any subsequent application.

Foresight EX1109
Foresight v Personalis
IPR2024-00170

4. **Add 200 µl ethanol (96–100%) to the sample, and mix by pulse-vortexing for 15 s. After mixing, briefly centrifuge the 1.5 ml microcentrifuge tube to remove drops from inside the lid.**

   It is essential that the sample, Buffer AL, and the ethanol are mixed thoroughly to yield a homogeneous solution.

   A white precipitate may form on addition of ethanol. It is essential to apply all of the precipitate to the QIAamp Spin Column. This precipitate does not interfere with the QIAamp procedure or with any subsequent application.

   Do not use alcohols other than ethanol since this may result in reduced yields.

5. **Carefully apply the mixture from step 4 (including the precipitate) to the QIAamp Spin Column (in a 2 ml collection tube) without wetting the rim. Close the cap, and centrifuge at 6000 x *g* (8000 rpm) for 1 min. Place the QIAamp Spin Column in a clean 2 ml collection tube (provided), and discard the tube containing the filtrate.**

   Close each spin column to avoid aerosol formation during centrifugation.

   It is essential to apply all of the precipitate to the QIAamp Spin Column.

   Centrifugation is performed at 6000 x *g* (8000 rpm) in order to reduce noise. Centrifugation at full speed will not affect the yield or purity of the DNA. If the solution has not completely passed through the membrane, centrifuge again at a higher speed until all the solution has passed through.

6. **Carefully open the QIAamp Spin Column and add 500 µl Buffer AW1 without wetting the rim. Close the cap, and centrifuge at 6000 x *g* (8000 rpm) for 1 min. Place the QIAamp Spin Column in a clean 2 ml collection tube (provided), and discard the collection tube containing the filtrate.**

7. **Carefully open the QIAamp Spin Column and add 500 µl Buffer AW2 without wetting the rim. Close the cap and centrifuge at full speed (20,000 x *g*; 14,000 rpm) for 3 min. Continue directly with step 8, or to eliminate any chance of possible Buffer AW2 carryover, perform step 7a, and then continue with step 8.**

   Note: Residual Buffer AW2 in the eluate may cause problems in downstream applications. Some centrifuge rotors may vibrate upon deceleration, resulting in the flow-through, which contains Buffer AW2, coming into contact with the QIAamp Spin Column. Removing the QIAamp Spin Column and collection tube from the rotor may also cause flow-through to come into contact with the QIAamp Spin Column. In these cases, the optional step 7a should be performed.

7a. **(Optional): Place the QIAamp Spin Column in a new 2 ml collection tube (not provided) and discard the collection tube containing the filtrate. Centrifuge at 20,000 x *g* (14,000 rpm) for 1 min.**

Foresight EX1109
Foresight v Personalis
IPR2024-00170

8. **Place the QIAamp Spin Column in a clean 1.5 ml microcentrifuge tube (not provided), and discard the collection tube containing the filtrate. Carefully open the QIAamp Spin Column and add 200 µl Buffer AE or distilled water. Incubate at room temperature for 1 min, and then centrifuge at 6000 x *g* (8000 rpm) for 1 min.**

9. **Repeat step 8.**

   A 5 min incubation of the QIAamp Spin Column loaded with Buffer AE or water, before centrifugation, generally increases DNA yield.

   A third elution step with a further 200 µl Buffer AE will increase yields by up to 15%.

   Volumes of more than 200 µl should not be eluted into a 1.5 ml microcentrifuge tube because the spin column will come into contact with the eluate, leading to possible aerosol formation during centrifugation.

   Elution with volumes of less than 200 µl increases the final DNA concentration in the eluate significantly, but slightly reduces the overall DNA yield (see Table 3, page 16). Eluting with 4 x 100 µl instead of 2 x 200 µl does not increase elution efficiency.

   For long-term storage of DNA, eluting in Buffer AE and placing at –20°C is recommended, since DNA stored in water is subject to acid hydrolysis.

   Yields of DNA will depend both on the amount and the type of tissue processed. 25 mg of tissue will yield approximately 10–30 µg of DNA in 400 µl of water (25–75 ng/µl), with an A_{260}/A_{280} ratio of 1.7–1.9.

   For more information about elution and how to determine DNA yield, length, and purity, refer to pages 15–17.

Foresight EX1109
Foresight v Personalis
IPR2024-00170

Buccal Swab Spin Protocol

Important points before starting:

- Due to the increased volume of Buffer AL that is required for the buccal swab protocol, fewer preparations can be performed. Additional Buffer AL can be purchased separately (see Ordering Information on page 63).
- This protocol is recommended for the following swab types: C.E.P. (Omni Swabs from Whatman Bioscience, **www.whatman.com**), cotton, and DACRON® (Daigger, Puritan® applicators with plastic stick and cotton or DACRON tip from Hardwood Products Company, **www.hwppuritan.com**, or from Hain Diagnostika, **www.hain-diagnostika.de**).
- All centrifugation steps are carried out at room temperature (15–25°C).
- To collect a sample, scrape the swab firmly against the inside of each cheek 6 times. Air-dry the swab for at least 2 h after collection. Ensure that the person providing the sample has not consumed any food or drink in the 30 min prior to sample collection.

Things to do before starting:

- Prepare a 56°C water bath for use in step 3.
- Equilibrate Buffer AE or distilled water to room temperature for elution in step 9.
- Ensure that Buffer AW1, Buffer AW2, and QIAGEN Protease have been prepared according to the instructions on page 24.
- If a precipitate has formed in Buffer AL, dissolve by incubating at 56°C.

1. **Place buccal swab in a 2 ml microcentrifuge tube. Add 400 µl (cotton and DACRON swab) or 600 µl (Omni Swab) PBS to the sample.**

   The Omni Swab is ejected into the microcentrifuge tube by pressing the stem end towards the swab. Cotton or DACRON swabs are separated from the stick by hand or with scissors.

   QIAamp Spin Columns copurify RNA and DNA in parallel when both are present in the sample. RNA may inhibit some downstream enzymatic reactions, but not PCR. If RNA-free genomic DNA is required, 4 µl of an RNase A stock solution (100 mg/ml) should be added to the sample prior to the addition of Buffer AL.

2. **Add 20 µl QIAGEN Protease stock solution (or Proteinase K) and 400 µl (cotton or DACRON swab) or 600 µl (Omni Swab) Buffer AL to the sample. Mix immediately by vortexing for 15 s.**

   In order to ensure efficient lysis, it is essential that the sample and Buffer AL are mixed immediately and thoroughly.

   Note: Do not add QIAGEN Protease or Proteinase K directly to Buffer AL.

3. **Incubate at 56°C for 10 min. Briefly centrifuge to remove drops from inside the lid.**

Foresight EX1109
Foresight v Personalis
IPR2024-00170

4. **Add 400 µl (cotton or DACRON swab) or 600 µl (Omni Swab) ethanol (96–100%) to the sample, and mix again by vortexing. Briefly centrifuge to remove drops from inside the lid.**

5. **Carefully apply 700 µl of the mixture from step 4 to the QIAamp Spin Column (in a 2 ml collection tube) without wetting the rim, close the cap, and centrifuge at 6000 x *g* (8000 rpm) for 1 min. Place the QIAamp Spin Column in a clean 2 ml collection tube (provided), and discard the tube containing the filtrate.**

   Close each spin column in order to avoid aerosol formation during centrifugation.

6. **Repeat step 5 by applying up to 700 µl of the remaining mixture from step 4 to the Spin Column.**

7. **Carefully open the QIAamp Spin Column and add 500 µl Buffer AW1 without wetting the rim. Close the cap and centrifuge at 6000 x *g* (8000 rpm) for 1 min. Place the QIAamp Spin Column in a clean 2 ml collection tube (provided), and discard the collection tube containing the filtrate.**

8. **Carefully open the QIAamp Spin Column and add 500 µl Buffer AW2 without wetting the rim. Close the cap and centrifuge at full speed (20,000 x *g*; 14,000 rpm) for 3 min. Continue directly with step 9, or to eliminate any chance of possible Buffer AW2 carryover, perform step 8a, and then continue with step 9.**

   Note: Residual Buffer AW2 in the eluate may cause problems in downstream applications. Some centrifuge rotors may vibrate upon deceleration, resulting in the flow-through, which contains Buffer AW2, coming into contact with the QIAamp Spin Column. Removing the QIAamp Spin Column and collection tube from the rotor may also cause flow-through to come into contact with the QIAamp Spin Column. In these cases, the optional step 8a should be performed.

8a. **(Optional): Place the QIAamp Spin Column in a new 2 ml collection tube (not provided) and discard the collection tube with the filtrate. Centrifuge at 20,000 x *g* (14,000 rpm) for 1 min.**

9. **Place the QIAamp Spin Column in a clean 1.5 ml microcentrifuge tube (not provided), and discard the collection tube containing the filtrate. Carefully open the QIAamp Spin Column and add 150 µl Buffer AE or distilled water. Incubate at room temperature for 1 min, and then centrifuge at 6000 x *g* (8000 rpm) for 1 min.**

   Elution with 100 µl buffer increases the final DNA concentration in the eluate significantly, but may slightly reduce the overall DNA yield. Elution with volumes of less than 100 µl is not recommended as the overall DNA yield decreases dramatically.

   A second elution step with the same 150 µl eluate containing the DNA will increase yield significantly. However this is not recommended when using the eluate for PCR.

   For long-term storage of DNA, eluting in Buffer AE and placing at –20°C is recommended.

   One buccal swab typically yields 0.5–3.5 µg of DNA in 150 µl of buffer (3–23 ng/µl), with A_{260}/A_{280} ratios of 1.7–1.9 (measured in water).

Foresight EX1109
Foresight v Personalis
IPR2024-00170

Buccal Swab Vacuum Protocol

Important points before starting:

- Due to the increased volume of Buffer AL that is required for the buccal swab protocol, fewer preparations can be performed. Additional Buffer AL can be purchased separately (see Ordering Information on page 63).
- This protocol is recommended for the following swab types: C.E.P. (Omni Swabs from Whatman Bioscience, **www.whatman.com**), cotton, and DACRON (Daigger, Puritan applicators with plastic stick and cotton or DACRON tip from Hardwood Products Company, **www.hwppuritan.com**, or from Hain Diagnostika, **www.hain-diagnostika.de**).
- To collect a sample, scrape the swab firmly against the inside of each cheek 6 times. Air-dry the swab for at least 2 h after collection. Ensure that the person providing the sample has not consumed any food or drink in the 30 min prior to sample collection.

Things to do before starting:

- Prepare a 56°C water bath for use in step 3.
- Equilibrate Buffer AE or distilled water to room temperature for elution in step 10.
- Ensure that Buffer AW1, Buffer AW2, and QIAGEN Protease have been prepared according to the instructions on page 24.
- If a precipitate has formed in Buffer AL, dissolve by incubating at 56°C.
- All centrifugation steps are carried out at room temperature (15–25°C).
- For setup of the QIAvac 24, see pages 18–20. For setup of the QIAvac 6S, see pages 21–23.
- Switch off the vacuum between steps to ensure that a consistent, even vacuum is applied during protocol steps.

1. **Place buccal swab in a 2 ml microcentrifuge tube. Add 400 µl (cotton and DACRON swab) or 600 µl (Omni Swab) PBS to the sample.**

   The Omni Swab is ejected into the microcentrifuge tube by pressing the stem end towards the swab. Cotton or DACRON swabs are cut from the stick by hand or with scissors.

   QIAamp Spin Columns copurify RNA and DNA in parallel when both are present in the sample. RNA may inhibit some downstream enzymatic reactions, but not the PCR itself. If RNA-free genomic DNA is required, 4 µl RNase A stock solution (100 mg/ml) should be added to the sample prior to the addition of Buffer AL.

Foresight EX1109
Foresight v Personalis
IPR2024-00170

2. **Add 20 µl QIAGEN Protease stock solution (or Proteinase K) and 400 µl (cotton or DACRON swab) or 600 µl (Omni Swab) of Buffer AL to the sample. Mix immediately by vortexing for 15 s.**

   In order to ensure efficient lysis, it is essential that the sample and Buffer AL are mixed immediately.

   Note: Do not add QIAGEN Protease or Proteinase K directly to Buffer AL.

3. **Incubate at 56°C for 10 min. Briefly centrifuge to remove drops from inside the lid.**
4. **Add 400 µl (cotton or DACRON swab) or 600 µl (Omni Swab) ethanol (96–100%) to the sample, and mix again by vortexing.**
5. **Insert the QIAamp Spin Column into a VacConnector on the QIAvac vacuum manifold. Place an extension tube (see Ordering Information, page 63) on the column. Seal unused Luer Adapters with Luer plugs.**
6. **Apply the mixture from step 4 to the QIAamp Spin Column. Switch on the vacuum pump to draw the lysate through the QIAamp Spin Column. After the lysate has passed through the QIAamp Spin Column, switch off the vacuum pump.**
7. **Add 750 µl Buffer AW1 into the extension tube. Switch on the vacuum pump to draw Buffer AW1 through the QIAamp Spin Column. Switch off the vacuum pump. Carefully remove the extension tube from the QIAamp Spin Column and discard.**
8. **Add 750 µl Buffer AW2 without wetting the rim of the QIAamp Spin Column. Leave the lid of the spin column open and switch on the vacuum pump. After all of Buffer AW2 has been drawn through the spin column, switch off the vacuum pump.**
9. **Close the lid of the QIAamp Spin Column, remove it from the vacuum manifold, and discard the VacConnector. Place the QIAamp Spin Column into a clean 2 ml collection tube and centrifuge at 20,000 x *g* (14,000 rpm) for 1 min to dry the membrane completely.**
10. **Place the QIAamp Spin Column in a clean 1.5 ml microcentrifuge tube (not provided). Discard the collection tube and the filtrate. Carefully open the QIAamp Spin Column. Elute the DNA with 150 µl Buffer AE or distilled water. Incubate at room temperature for 1 min, and then centrifuge at 6000 x *g* (8000 rpm) for 1 min.**

    Elution with 100 µl buffer increases the final DNA concentration in the eluate significantly, but may slightly reduce the overall DNA yield. Elution with volumes of less than 100 µl is not recommended as overall DNA yield decreases dramatically.

    A second elution step with the same 150 µl eluate containing the DNA will increase yield significantly. However this is not recommended when using the eluate for PCR.

    For long-term storage of DNA, eluting in Buffer AE and placing at –20°C is recommended.

    One buccal swab typically yields 0.5–3.5 µg DNA in 150 µl buffer (3–23 ng/µl), with A_{260}/A_{280} ratios of 1.7–1.9 (measured in water).

Foresight EX1109
Foresight v Personalis
IPR2024-00170

Dried Blood Spot Protocol

Notes:

- This protocol is suitable for blood, both untreated and treated with anticoagulants, which has been spotted and dried on filter paper (Schleicher and Schuell 903).
- Prepare a 85°C water bath for use in step 2, a 56°C water bath for use in step 3, and a 70°C water bath for use in step 4.
- Ensure that Buffers AW1 and AW2 have been prepared according to the instructions on page 24.
- If a precipitate has formed in Buffer AL or Buffer ATL, dissolve by incubating at 56°C.
- All centrifugation steps are carried out at room temperature (15–25°C).

1. **Place 3 punched-out circles from a dried blood spot into a 1.5 ml microcentrifuge tube and add 180 µl of Buffer ATL.**

   Cut 3 mm (1/8 inch) diameter punches from a dried blood spot with a single-hole paper puncher.
2. **Incubate at 85°C for 10 min. Briefly centrifuge to remove drops from inside the lid.**
3. **Add 20 µl Proteinase K stock solution, mix by vortexing, and incubate at 56°C for 1 h. Briefly centrifuge to remove drops from inside the lid.**

   Note: The addition of Proteinase K is essential.
4. **Add 200 µl Buffer AL to the sample, mix thoroughly by vortexing, and incubate at 70°C for 10 min. Briefly centrifuge to remove drops from inside the lid.**

   In order to ensure efficient lysis, it is essential that the sample and Buffer AL are mixed immediately and thoroughly.

   Note: Do not add Proteinase K directly to Buffer AL.

   A white precipitate may form when Buffer AL is added to the sample. In most cases, the precipitate will dissolve during incubation. The precipitate does not interfere with the QIAamp procedure or with any subsequent application.
5. **Add 200 µl ethanol (96–100%) to the sample, and mix thoroughly by vortexing. Briefly centrifuge to remove drops from inside the lid.**

   It is essential that the sample and ethanol are mixed thoroughly.
6. **Carefully apply the mixture from step 5 to the QIAamp Spin Column (in a 2 ml collection tube) without wetting the rim. Close the cap, and centrifuge at 6000 x *g* (8000 rpm) for 1 min. Place the QIAamp Spin Column in a clean 2 ml collection tube (provided), and discard the tube containing the filtrate.**

   Close each spin column in order to avoid aerosol formation during centrifugation.

Foresight EX1109
Foresight v Personalis
IPR2024-00170

7. **Carefully open the QIAamp Spin Column and add 500 µl Buffer AW1 without wetting the rim. Close the cap and centrifuge at 6000 x *g* (8000 rpm) for 1 min. Place the QIAamp Spin Column in a clean 2 ml collection tube (provided), and discard the collection tube containing the filtrate.**

8. **Carefully open the QIAamp Spin Column and add 500 µl Buffer AW2 without wetting the rim. Close the cap and centrifuge at full speed (20,000 x *g*; 14,000 rpm) for 3 min. Continue directly with step 9, or to eliminate any chance of possible Buffer AW2 carryover, perform step 8a, and then continue with step 9.**

   Note: Residual Buffer AW2 in the eluate may cause problems in downstream applications. Some centrifuge rotors may vibrate upon deceleration, resulting in the flow-through, which contains Buffer AW2, coming into contact with the QIAamp Spin Column. Removing the QIAamp Spin Column and collection tube from the rotor may also cause flow-through to come into contact with the QIAamp Spin Column. In these cases, the optional step 8a should be performed.

8a. **(Optional): Place the QIAamp Spin Column in a new 2 ml collection tube (not provided) and discard the collection tube with the filtrate. Centrifuge at 20,000 x *g* (14,000 rpm) for 1 min.**

9. **Place the QIAamp Spin Column in a clean 1.5 ml microcentrifuge tube (not provided), and discard the collection tube containing the filtrate. Carefully open the QIAamp Spin Column and add 150 µl Buffer AE or distilled water. Incubate at room temperature for 1 min, and then centrifuge at 6000 x *g* (8000 rpm) for 1 min.**

   Note: Do not elute the DNA with volumes of less than 100 µl.

   Three punched-out circles (3 mm diameter) typically yield 150 ng and 75 ng of DNA from anticoagulated and untreated blood, respectively. If the yield from untreated blood is not sufficient, use 6 circles per prep instead of 3.

   The volume of the DNA eluate used in a PCR assay should not exceed 10%, e.g., for a 50 µl PCR, add no more than 5 µl of eluate.

Foresight EX1109
Foresight v Personalis
IPR2024-00170

Troubleshooting Guide

	Comments and suggestions
Colored residues remain on the QIAamp Spin Column after washing	
a) Inefficient cell lysis due to insufficient mixing of the sample with Buffer AL	Repeat the DNA purification procedure with a new sample. Be sure to mix the sample and Buffer AL immediately and thoroughly by pulse-vortexing.
b) Inefficient cell lysis due to decreased protease activity	Repeat the DNA purification procedure with a new sample and with freshly prepared QIAGEN Protease stock solution. Be sure to store the stock solution at 2–8°C immediately after use. Ensure that QIAGEN Protease is not added directly to Buffer AL.
c) No alcohol added to the lysate before loading onto the QIAamp Spin Column	Repeat the purification procedure with a new sample.
d) Buffer AW1 or AW2 prepared incorrectly	Ensure that Buffer AW1 and AW2 concentrates were diluted with the correct volumes of pure ethanol (see page 24). Repeat the purification procedure witha new sample.
Little or no DNA in the eluate	
a) Low concentration of cells or viruses in the sample	Concentrate a larger volume of a new cell-free sample to 200 µl using a Centricon®-100 (Amicon, USA). Repeat the DNA purification procedure, adding 5–10 µg of carrier DNA to each lysate (see page 9) if the sample has a low DNA content. If whole blood was used, prepare buffy coat (see procedure on page 29).
b) Inefficient cell lysis due to insufficient mixing with Buffer AL	Repeat the DNA purification procedure with a new sample. Be sure to mix the sample and Buffer AL immediately and thoroughly by pulse-vortexing.

Foresight EX1109
Foresight v Personalis
IPR2024-00170

	Comments and suggestions
c) Inefficient cell lysis due to decreased protease activity	Repeat the DNA purification procedure with a new sample and with freshly prepared QIAGEN Protease stock solution. Be sure to store the stock solution at 2–8°C immediately after use. Ensure that QIAGEN Protease is not added directly to Buffer AL.
d) Inefficient cell lysis or protein degradation in Buffer AL or Buffer ATL due to insufficient incubation time	Repeat the procedure with a new sample. Ensure that the tissue sample is cut into small pieces and extend the incubation time. Ensure that no residual particulates are visible (bones or hair will not be lysed at all).
e) No alcohol added to the lysate before loading onto the QIAamp Spin Column	Repeat the purification procedure with a new sample.
f) Low-percentage alcohol used instead of 100%	Repeat the purification procedure with a new sample.
g) Isopropanol used instead of ethanol with samples other than blood or plasma	We strictly recommend the use of ethanol with all samples other than blood or plasma (serum). The use of isopropanol results in reduced yields with all other samples.
h) QIAamp Spin Column not incubated at room temperature (15–25°C) for 1 minute	After addition of Buffer AE or water, the QIAamp Spin Column should be incubated at room temperature for at least 1 min.
i) DNA not eluted efficiently	To increase elution efficiency, pipet Buffer AE or water onto the QIAamp Spin Column and incubate the column for 5 min at room temperature before centrifugation.
j) pH of water incorrect (acidic)	Low pH may reduce DNA yield. Ensure that the pH of the water is at least 7.0 or use Buffer AE for elution.
k) Buffer AW1 or AW2 prepared incorrectly	Check that Buffer AW1 and AW2 concentrates were diluted with the correct volumes of pure ethanol (see page 24). Repeat the purification procedure with a new sample.

Foresight EX1109
Foresight v Personalis
IPR2024-00170

	Comments and suggestions
l) Buffer AW1 or AW2 prepared with 70% ethanol	Check that Buffer AW1 and AW2 concentrates were diluted with 96–100% ethanol. Repeat the purification procedure with a new sample.
m) Buffers AW1 and AW2 used in the wrong order	Ensure that Buffers AW1 and AW2 are used in the correct order in the protocol. Repeat the purification procedure with a new sample.
n) Elution with too much Buffer AE	Elution with volumes of less than 200 µl increases the final DNA concentration in the eluate, but slightly reduces the overall DNA yield (see Table 4 on page 16). For samples containing less than 1 µg of DNA, elution in 50 µl of Buffer AE or water is always recommended.
A_{260}/A_{280} ratio for purified nucleic acids is low	
a) Inefficient cell lysis due to insufficient mixing with Buffer AL	Repeat the procedure with a new sample. Be sure to mix the sample and Buffer AL immediately and thoroughly by pulse-vortexing.
b) Inefficient cell lysis due to decreased protease activity	Repeat the DNA purification procedure with a new sample and with freshly prepared QIAGEN Protease stock solution. Be sure to store the stock solution at 2–8°C immediately after use. Ensure that QIAGEN Protease is not added directly to Buffer AL.
c) Inefficient cell lysis or protein degradation in Buffer AL or Buffer ATL due to insufficient incubation time	Repeat the procedure with a new sample. Extend the incubation time. Take care that no residual particulates are visible (bones or hair will not be lysed at all).
d) No alcohol added to the lysate before loading onto the QIAamp Spin Column	Repeat the purification procedure with a new sample.
e) Low percentage alcohol used instead of 100%	Repeat the purification procedure with a new sample.
f) Buffer AW1 or AW2 prepared incorrectly	Check that Buffer AW1 and AW2 concentrates were diluted with the correct volumes of pure ethanol (see page 24). Repeat the purification procedure with a new sample.

Foresight EX1109
Foresight v Personalis
IPR2024-00170

	Comments and suggestions
g) Buffer AW1 or AW2 prepared with 70% ethanol	Check that Buffer AW1 and AW2 concentrates were diluted with 96–100% ethanol. Repeat the purification procedure with a new sample.
h) Buffers AW1 and AW2 used in the wrong order	Ensure that Buffers AW1 and AW2 are used in the correct order in the protocol. Repeat the purification procedure with a new sample.
A_{260}/A_{280} ratio for purified nucleic acids is high	
a) High level of residual RNA	In future DNA preparations, use the optional RNase step included in the protocols.
b) Buffer AL added to the sample before addition of RNase A	Always add RNase A first and vortex when using the optional RNase A step.
DNA does not perform well in subsequent enzymatic reactions	
a) Not enough DNA in sample	Check "Little or no DNA in the eluate" on page 43 of this troubleshooting guide for possible reasons. Increase the amount of eluate added to the reaction, if possible. If necessary, vacuum-concentrate the DNA or increase the amount of sample used, and repeat the purification procedure. If the amount of purified DNA is still expected to be low, reduce the elution volume to 50 µl. Lowering the elution volume will slightly reduce the overall yield, but will result in a higher concentration of nucleic acids in the eluate (see Table 4 on page 16). DNA remaining on the QIAamp Spin Column can be recovered in a subsequent elution step by applying the same eluate to the column.
b) Inhibitory substances in preparation	Check "A_{260}/A_{280} ratio for purified nucleic acids is low" on page 45 for possible reasons.
c) Residual Buffer AW2 in the eluate	Use optional drying step in the relevant protocol. Ensure that the spin column does not come into contact with the filtrate prior to elution.
d) Buffers AW1 and AW2 used in the wrong order	Ensure that Buffers AW1 and AW2 are used in the correct order in the protocol. Repeat the purification procedure with a new sample.

Foresight EX1109
Foresight v Personalis
IPR2024-00170

	Comments and suggestions
e) High level of residual RNA	In future DNA preparations, use the optional RNase step included in the protocols.
f) Reduced sensitivity of amplification reaction	Adjust the volume of eluate added as template in the amplification reaction.
g) Amplification reaction setup has been modified	Reoptimize the amplification system by adjusting the volume of eluate added.

White precipitate in Buffer ATL or Buffer AL

a) White precipitate may form after storage at low temperature or prolonged storage	Any precipitate in Buffer ATL or Buffer AL must be dissolved by incubation of the buffer at 56°C. The precipitate has no effect on function. Dissolving the precipitate at high temperature will not compromise yield or quality of the purified nucleic acids.

White precipitate in steps 3 or 4 of the tissue protocol

White precipitate may form on addition of Buffer AL in step 3 or ethanol in step 4	In most cases the precipitate formed in step 3 will dissolve during incubation at 70°C. The precipitates do not interfere with the QIAamp procedure, or with any subsequent application.

General handling

a) Lysate not completely passed through the membrane	Using spin protocol: Centrifuge for 1 min at full speed or until all the lysate has passed through the membrane. Using vacuum protocol: Insufficient vacuum was applied or the lid of the spin column was closed during the vacuum step. Increase the vacuum, and open the lid while applying the vacuum. If the vacuum pressure cannot be increased, place the QIAamp Spin Column in a clean 2 ml collection tube, close the cap, and centrifuge at 6000 x *g* (8000 rpm) for 3 min or until the lysate has completely passed through the membrane. Place the QIAamp Spin Column into another clean 2 ml collection tube, and discard the tube containing the filtrate. Continue with step 8 of the spin protocol on page 28.

Foresight EX1109
Foresight v Personalis
IPR2024-00170

	Comments and suggestions
b) Clogged membrane	Blood samples: Concentration of leukocytes in samples was greater than 5 x 10^6/200 µl. Plasma samples: Cryoprecipitates have formed in plasma due to repeated freezing and thawing. Do not use plasma that has been frozen and thawed more than once.
c) Cross-contamination between samples	To avoid cross-contamination when handling QIAamp Spin Columns, read "Handling of QIAamp Spin Columns" on page 25. Repeat the purification procedure with new samples.
d) Vacuum pressure too high/too low	Using a vacuum pressure that is too high may damage the QIAamp membrane. Using a vacuum pressure that is too low may cause reduced DNA yield and purity. Use a vacuum regulator (see Ordering Information on page 63) to adjust the pressure to –800 to –900 mbar for all vacuum steps.

Foresight EX1109
Foresight v Personalis
IPR2024-00170

Appendix

QIAGEN is continuously developing and optimizing QIAamp protocols for new sample sources which are not yet listed here. Additional preliminary protocols developed by customers are available for the following samples: bone, hair, nails, sperm, and fungi. Please contact one of our Technical Service Departments or your local distributor (see inside front cover) for more information.

Protocol for cultured cells

1. **Harvest cells**

   a) Cells grown in suspension

   Centrifuge the appropriate number of cells (maximum 5 x 10^6 cells, with a normal set of chromosomes) for 5 min at 300 x *g* in a 1.5 ml microcentrifuge tube. Remove the supernatant completely and discard, taking care not to disturb the cell pellet. Continue with step 2.

   b) Cells grown in monolayer

   Cells grown in monolayer can be detached from the culture flask by either 1) trypsinization or 2) using a cell scraper, e.g., a rubber policeman.

   1) To trypsinize cells: Aspirate the medium and wash cells with PBS. Aspirate the PBS and add trypsin solution. After cells have become detached from the dish or flask, collect the cells in medium, and transfer the appropriate number of cells (maximum 5 x 10^6 cells, with a normal set of chromosomes) to a 1.5 ml microcentrifuge tube. Centrifuge for 5 min at 300 x *g*. Remove the supernatant completely and discard, taking care not to disturb the cell pellet. Continue with step 2.
   2) Using a cell scraper, detach cells from the the dish or flask. Transfer the appropriate number of cells (maximum 5 x 10^6 cells, with a normal set of chromosomes) to a 1.5 ml microcentifuge tube and centrifuge for 5 min at 300 x *g*. Remove the supernatant completely and discard without disturbing the cell pellet. Continue with step 2.

2. **Resuspend cell pellet in PBS to a final volume of 200 µl.**
3. **Add 20 µl QIAGEN Protease or Proteinase K.**
4. **Continue with step 3 of the Blood and Body Fluid Spin Protocol (page 27).**

Foresight EX1109
Foresight v Personalis
IPR2024-00170

Protocols for fixed tissues

The QIAamp DNA Mini Kit has been successfully used to isolate DNA from fixed tissues. However, the length of DNA isolated from fixed tissues is usually <650 bp, depending on the type and age of the sample and the quality of the fixative used (Wright, D. K. and Manos, M. M. [1990] Sample preparation from paraffin-embedded tissues. In: Innis, M.A., Gelfont, D. H., Sninsky, J. J., White, T. J., eds. *PCR Protocols: A guide to methods and applications*. San Diego: Academic Press, p. 153–158).

Use of fixatives such as alcohol and formalin are recommended. Fixatives that cause cross-linking, such as osmium tetroxide, are not recommended as it can be difficult to obtain amplifiable DNA from tissue fixed with these agents.

Additional reagents required:

- Xylene (for paraffin-embedded tissues: optional)
- 96–100 % Ethanol (for paraffin-embedded tissues)
- PBS (for formalin-fixed tissues)

Protocol A

Isolation of genomic DNA from paraffin-embedded tissue

This protocol describes the removal of paraffin by extraction with xylene. The tissue sample is then processed according to the QIAamp DNA Mini Tissue Protocol (page 33).

Note: Several customers have reported that it is not necessary to remove the paraffin by xylene extraction before processing. The paraffin melts during the 56°C incubation and does not affect the QIAamp procedure. While this may not work for all types of paraffin-embedded samples, you may wish to try omitting the xylene-extraction protocol, since it makes the isolation procedure much simpler.

Important notes before starting

- Lysis time will vary from sample to sample depending on the type of tissue processed.
- Yields will depend both on the size and the age of the sample processed. Reduced yields compared to fresh or frozen tissues are expected. Therefore, eluting the DNA in 50–100 µl Buffer AE is recommended.

1. **Place a small section (not more than 25 mg) of paraffin-embedded tissue in a 2 ml microcentrifuge tube (not provided).**
2. **Add 1200 µl xylene. Vortex vigorously.**
3. **Centrifuge at full speed for 5 min at room temperature.**
4. **Remove supernatant by pipetting. Do not remove any of the pellet.**
5. **Add 1200 µl ethanol (96–100%) to the pellet to remove residual xylene and mix gently by vortexing.**

Foresight EX1109
Foresight v Personalis
IPR2024-00170

6. **Centrifuge at full speed for 5 min at room temperature (15–25°C).**
7. **Carefully remove the ethanol by pipetting. Do not remove any of the pellet.**
8. **Repeat steps 5–7 once.**
9. **Incubate the open microcentrifuge tube at 37°C for 10–15 min until the ethanol has evaporated.**
10. **Resuspend the tissue pellet in 180 µl Buffer ATL and follow the Tissue Protocol (page 33) from step 2.**

Protocol B

Isolation of genomic DNA from formalin-fixed tissues

Important notes before starting

- Lysis time will vary from sample to sample depending on the type of tissue processed.
- Yields will depend both on the size and the age of the sample processed. Reduced yields compared to fresh or frozen tissues are to be expected. Therefore, eluting the DNA in 50–100 µl Buffer AE is recommended.

1. **Wash tissue sample twice with PBS to remove fixative.**
2. **Process sample according to the Tissue Protocol on page 33.**

Foresight EX1109
Foresight v Personalis
IPR2024-00170

Protocols for bacteria

These protocols have been used successfully for bacteria such as *Escherichia coli, Bacillus subtilis, Bordetella pertussis* from nasopharyngeal swabs, *Borrelia burgdorferi* from cerebrospinal fluid, and *Legionella pneumophila* from broncho-alveolar lavage. Please refer to Protocol D for other bacteria, especially other Gram-positive bacteria, which may be difficult to lyse.

Protocol A

Isolation of bacterial DNA from biological fluids

1. **Pellet bacteria by centrifugation for 10 min at 5000 x *g* (7500 rpm).**
2. **Resuspend bacterial pellet in 180 µl Buffer ATL (supplied in the QIAamp DNA Mini Kit).**
3. **Follow the Tissue Protocol (page 33) from step 2.**

Protocol B

Isolation of bacterial DNA from eye, nasal, pharyngeal, or other swabs*

1. **Collect samples and place in 2 ml PBS containing a common fungicide. Incubate for several hours at room temperature.**
2. **Follow Protocol A from step 1.**

Protocol C

Isolation of genomic DNA from bacterial cultures

a) **Plate cultures**

1. **Remove bacteria from culture plate with an inoculation loop and suspend in 180 µl of Buffer ATL (supplied in the QIAamp DNA Mini Kit) by vigorous stirring.**
2. **Follow the Tissue Protocol (page 33) from step 2.**

b) **Suspension cultures**

1. **Pipet 1 ml of bacterial culture into a 1.5 ml microcentrifuge tube, and centrifuge for 5 min at 5000 x *g* (7500 rpm).**
2. **Calculate the volume of the pellet or concentrate and add Buffer ATL (supplied in the QIAamp DNA Mini Kit) to a total volume of 180 µl.**
3. **Follow the Tissue Protocol (page 33) from step 2.**

**See also "Buccal Swab Spin Protocol" on page 37.*

Foresight EX1109
Foresight v Personalis
IPR2024-00170

For isolation of bacterial DNA from urine, either follow Protocol A, or use the QIAamp Viral RNA Mini Kit. Urine contains numerous unidentified PCR inhibitors. Buffer AVL (included in the QIAamp Viral RNA Mini Kit) is the buffer of choice to destroy these inhibitors.

Some bacteria (particularly Gram-positive bacteria) require pre-incubation with specific enzymes such as lysozyme or lysostaphin (e.g., staphylococci) to lyse the rigid multilayered cell wall. In these cases Protocol D should be used.

Protocol D

Isolation of genomic DNA from Gram-positive bacteria

1. **Pellet bacteria by centrifugation for 10 min at 5000 x *g* (7500 rpm).**
2. **Suspend bacterial pellet in 180 µl of the appropriate enzyme solution (20 mg/ml lysozyme or 200 µg/ml lysostaphin; 20 mM Tris·HCl, pH 8.0; 2 mM EDTA; 1.2% Triton®).**
3. **Incubate for at least 30 min at 37°C.**
4. **Add 20 µl Proteinase K and 200 µl Buffer AL. Mix by vortexing.**
5. **Incubate at 56°C for 30 min and then for a further 15 min at 95°C.**

   Note: Extended incubation at 95°C can lead to some DNA degradation.
6. **Centrifuge for a few seconds.**
7. **Follow the Tissue Protocol (page 33) from step 4.**

Foresight EX1109
Foresight v Personalis
IPR2024-00170

Protocol for yeast (e.g., cultured *Candida* spp.)

Notes:

- Sorbitol buffer: 1 M sorbitol
  100 mM EDTA
  14 mM β-mercaptoethanol

1. **Grow yeast culture in YPD medium to an OD_{600} of 10.**
2. **Harvest 3 ml of culture by centrifuging for 10 min at 5000 x *g* (7500 rpm).**
3. **Resuspend the pellet in 600 µl sorbitol buffer. Add 200 U zymolase or lyticase and incubate at 30°C for 30 min.**
4. **Pellet the spheroplasts by centrifuging for 5 min at 5000 x *g* (7500 rpm).**
5. **Resuspend the spheroplasts in 180 µl Buffer ATL (supplied in the QIAamp DNA Mini Kit).**
6. **Follow the Tissue Protocol (page 33) from step 2.**

Please note that lysis time and yield will vary from sample to sample depending on the cell number and species processed. 3 ml of log-phase culture will yield approximately 15–25 µg of DNA in 400 µl of water (37–62 ng/µl), with an A_{260}/A_{280} ratio of 1.6–1.8. A third elution with 200 µl of Buffer AE or water will increase yield.

Foresight EX1109
Foresight v Personalis
IPR2024-00170

Protocols for viral DNA

Stool, plasma, serum, urine, cerebrospinal fluid, and other body fluids often contain very low numbers of cells or viruses. In these cases, concentrating samples from up to 3.5 ml to a final volume of 200 µl, as described in the "Protocol for sample concentration" on page 60, is recommended.

Protocol A

Integrated viral DNA

Integrated viral DNA is prepared by the same procedures as genomic DNA (see standard protocols).

Protocol B

Free viral DNA

a) Viral DNA from fluids or suspensions

For preparation of DNA from free viral particles in fluids or suspensions (other than urine) using the Blood and Body Fluid protocols we recommend the addition of 1 µl of an aqueous solution containing 5–10 µg of carrier DNA (e.g., poly dA, poly dT, poly dA:dT) to 200 µl Buffer AL.

To ensure binding conditions are optimal, increase the volume of ethanol added at step 6 from 200 µl to 230 µl.

Elution should be in 60 µl Buffer AE.

b) Viral DNA from stool

1. **Suspend 0.5–1.0 ml of a stool specimen in not more than 5 ml of 0.89% NaCl (maximum dilution 1:10).**
2. **Clarify the solution by centrifugation for 20 min at 4000 x *g*.**
3. **Filter supernatant through a 0.22 µm filter.**

   Filtration will remove cells from the sample, eliminating cellular DNA from the preparation.
4. **Pipet 200 µl of the filtrate into a 1.5 ml microcentrifuge tube. Add 20 µl QIAGEN Protease and continue with the Blood and Body Fluid Spin Protocol (page 27) from step 3.**

c) Viral DNA from eye, nasal, pharyngeal, or other swabs

1. **Collect samples and transfer to 2 ml PBS containing a common fungicide and bactericide. Incubate for 2–3 h at room temperature.**
2. **Concentrate the samples from 2 ml to 200 µl as described in the "Protocol for sample concentration" on page 60.**

Foresight EX1109
Foresight v Personalis
IPR2024-00170

3. **Pipet 200 µl concentrate into a 1.5 ml microcentrifuge tube. Add 20 µl QIAGEN Protease and continue with the Blood and Body Fluid Spin Protocol (page 27) from step 3.**

d) Viral DNA from urine

Use the QIAamp Viral RNA Mini Kit. Urine contains numerous unidentified PCR inhibitors. Buffer AVL (included in the QIAamp Viral RNA Mini Kit) is the buffer of choice to inactivate these inhibitors.

Eluting the DNA in 50–100 µl elution buffer or water is recommended.

Protocols for eye, nasal, or pharyngeal swabs*

Stool, plasma, serum, urine, cerebrospinal fluid, and other body fluids often contain very low numbers of cells or viruses. In these cases, concentrating samples from up to 3.5 ml to a final volume of 200 µl, as described in the "Protocol for sample concentration" on page 60, is recommended.

Protocol A

DNA viruses

See "Protocols for viral DNA" on page 55.

Protocol B

Bacteria

See "Protocol for bacteria" on page 52.

Protocol C

Cells

1. **Collect samples and transfer into 2 ml PBS containing a common fungicide and bactericide. Incubate for 2–3 h at room temperature (15–25°C).**
2. **Concentrate the samples from 2 ml to 200 µl as described in the "Protocol for sample concentration" on page 60. Alternatively pellet the cells by centrifuging for 10 min at 5000 x *g* (7500 rpm).**
3. **Pipet 200 µl concentrate into a 1.5 ml microcentrifuge tube. Alternatively resuspend the cell pellet in 200 µl PBS. Add 20 µl QIAGEN Protease and continue with the Blood and Body Fluid Spin Protocol (page 27) from step 3.**

Eluting the DNA in 50–100 µl of Buffer AE or water is recommended.

** See also Buccal Swab Spin Protocol, page 37.*

Foresight EX1109
Foresight v Personalis
IPR2024-00170

Protocol for mitochondrial DNA from platelets

Note: Due to the increased volumes of Buffer AL and QIAGEN Protease that are required for the following protocol, fewer preparations can be performed. Additional Buffer AL and QIAGEN Protease can be purchased separately (see Ordering Information on page 63).

1. **Draw blood in the presence of a common anticoagulant.**
2. **Take 8 ml of the blood and prepare platelet-rich plasma by centrifugation at 100 x *g* for 15 min at room temperature.**
3. **Transfer upper layer into a new tube and remove residual blood cells by centrifugation at 200 x *g* for 10 min at room temperature (15–25°C).**
4. **Transfer supernatant to a new tube.**
5. **Add 400 µl platelet suspension to a 1.5 ml microcentrifuge tube containing 40 µl QIAGEN Protease or Proteinase K. Add 400 µl Buffer AL and mix thoroughly by vortexing.**
6. **Incubate at 56°C for 10 min. Briefly centrifuge to remove drops from inside the lid.**
7. **Add 400 µl ethanol (96–100%), and mix again by vortexing. Briefly centrifuge to remove drops from inside the lid.**
8. **Apply 620 µl of the lysate to the QIAamp Spin Column (in a 2 ml collection tube) without wetting the rim. Close the cap, and centrifuge at 6000 x *g* (8000 rpm) for 1 min. Place the QIAamp Spin Column in a clean 2 ml collection tube (provided), and discard the tube containing the filtrate.**
9. **Apply the remainder of the lysate to the QIAamp Spin Column without wetting the rim. Close the cap, and centrifuge at 6000 x *g* (8000 rpm) for 1 min. Place the QIAamp Spin Column in a clean 2 ml collection tube, and discard the tube containing the filtrate.**
10. **Continue with step 8 of the Blood and Body Fluid Spin Protocol (page 28).**

    Eluting the DNA in 50–100 µl of Buffer AE or water is recommended.

Foresight EX1109
Foresight v Personalis
IPR2024-00170

Protocol for CSF and bone marrow on hematological slides

1. Moisten the dried material with a drop of PBS.
2. Add 180 µl PBS to a 1.5 ml microcentrifuge tube.
3. Scrape cytological material into the microcentrifuge tube using the edge of a clean slide.
4. Dissolve the resulting sludge by pipetting up and down.
5. Add 20 µl QIAGEN Protease and continue with the Blood and Body Fluid Spin Protocol (page 27) from step 3.

Foresight EX1109
Foresight v Personalis
IPR2024-00170

Protocol for crude cell lysates

For preparation of genomic DNA from samples other than those listed in this handbook or for which specialized protocols are not available, the following procedure is recommended.

Optimal lysis conditions must first be found for the specific sample being processed. QIAamp lysis buffers are not suitable for all sample sources.

1. **Lyse sample in the sample-specific lysis buffer in as small a volume as possible (200 µl of lysis buffer is optimal).**
2. **Estimate the volume of the lysate.**
3. **Add 20 µl Proteinase K per 200 µl lysate.**
4. **Add 200 µl Buffer AL per 200 µl lysate.**
5. **Mix immediately by pulse-vortexing for 15 s.**
6. **Incubate at 56°C for 10 min. Briefly centrifuge to remove drops from inside the lid.**
7. **Check the pH of the lysate. The pH must be acidic (<7.0) to obtain maximum binding of DNA to the QIAamp membrane.**
8. **Add 200 µl ethanol (96–100%) per 200 µl lysate, and mix again by pulse-vortexing for 15 s. Briefly centrifuge to remove drops from inside the lid.**
9. **Apply 620 µl of the lysate to the QIAamp Spin Column (in a 2 ml collection tube) without wetting the rim. Close the cap, and centrifuge at 6000 x *g* (8000 rpm) for 1 min. Place the QIAamp Spin Column in a clean 2 ml collection tube (provided), and discard the tube containing the filtrate.**
10. **Repeat step 9 until the whole lysate is loaded. A maximum of 5 x 620 µl can be loaded onto the QIAamp Spin Column.**
11. **Continue with step 8 of the Blood and Body Fluid Spin Protocol (page 28).**

    Note: Yields will vary from sample to sample depending on the cell number and species processed.

Foresight EX1109
Foresight v Personalis
IPR2024-00170

Protocol for sample concentration

Plasma, serum, urine, cerebrospinal fluid, and other body fluids often contain very low numbers of cells, bacteria, or viruses. In these cases, concentrating samples from up to 3.5 ml to a final volume of 200 µl is recommended.

Note: Use centrifugal micro-concentrators such as Amicon® Centricon-100 (Millipore, 2 ml), Microsep 100 (Filtron, 3.5 ml), and UltraFree®-CL (Millipore, 2 ml), or equivalents from other suppliers.

1. **Apply up to 3.5 ml sample to the micro-concentrator, according to manufacturer's instructions.**
2. **Centrifuge according to manufacturer's instructions to a final volume of 200 µl.**

   It may not always be possible to concentrate samples to 200 µl due to the high viscosity of the sample (e.g., plasma). In these cases, centrifugation for 6 h is recommended.
3. **Pipet 200 µl concentrate into a 1.5 ml microcentrifuge tube and follow the appropriate QIAamp protocol for the specific sample.**

Foresight EX1109
Foresight v Personalis
IPR2024-00170

Ordering Information

Product	Contents	Cat. No.
QIAamp DNA Mini Kits — for genomic DNA purification from tissue, blood, and body fluids		
QIAamp DNA Mini Kit (50)	For 50 DNA preps: 50 QIAamp Mini Spin Columns, Proteinase K, Reagents, Buffers, Collection Tubes (2 ml)	51304
QIAamp DNA Mini Kit (250)	For 250 DNA preps: 250 QIAamp Mini Spin Columns, Proteinase K, Reagents, Buffers, Collection Tubes (2 ml)	51306
QIAamp DNA Blood Mini Kits — for genomic DNA purification from blood and body fluids		
QIAamp DNA Blood Mini Kit (50)	For 50 DNA minipreps: 50 QIAamp Mini Spin Columns, QIAGEN Protease, Reagents, Buffers, Collection Tubes (2 ml)	51104
QIAamp DNA Blood Mini Kit (250)	For 250 DNA minipreps: 250 QIAamp Mini Spin Columns, QIAGEN Protease, Reagents, Buffers, Collection Tubes (2 ml)	51106
Related products		
QIAamp DNA Blood Kits — for genomic DNA purification from blood and body fluids		
QIAamp DNA Blood Midi Kit (20)	For 20 DNA midipreps: 20 QIAamp Midi Spin Columns, QIAGEN Protease, Buffers, Collection Tubes (15 ml)	51183
QIAamp DNA Blood Midi Kit (100)	For 100 DNA midipreps: 100 QIAamp Midi Spin Columns, QIAGEN Protease, Buffers, Collection Tubes (15 ml)	51185
QIAamp DNA Blood Maxi Kit (10)	For 10 DNA maxipreps: 10 QIAamp Maxi Spin Columns, QIAGEN Protease, Buffers, Collection Tubes (50 ml)	51192
QIAamp DNA Blood Maxi Kit (50)	For 50 DNA maxipreps: 50 QIAamp Maxi Spin Columns, QIAGEN Protease, Buffers, Collection Tubes (50 ml)	51194
QIAamp DNA Blood BioRobot® MDx Kit — for automated, high-throughput genomic DNA purification from blood and body fluids		
QIAamp DNA Blood BioRobot MDx Kit (12)	For 12 x 96 DNA preps: 12 QIAamp 96 Plates, Buffers, QIAGEN Protease, S-Blocks, Disposable Troughs, Racks with Elution Microtubes CL (0.4 ml), Top Elute Fluid, Caps, Tape Pad	965152

Foresight EX1109
Foresight v Personalis
IPR2024-00170

Ordering Information

Product	Contents	Cat. No.
QIAamp 96 DNA Blood Kits* — for high-throughput genomic DNA purification from blood and body fluids		
QIAamp 96 DNA Blood Kit (4)	For 4 x 96 DNA preps: 4 QIAamp 96 Plates, QIAGEN Protease, Reagents, Buffers, Lysis Blocks, Tape Pads, Collection Vessels	51161
QIAamp 96 DNA Blood Kit (12)	For 12 x 96 DNA preps: 12 QIAamp 96 Plates, QIAGEN Protease, Reagents, Buffers, Lysis Blocks, Tape Pads, Collection Vessels	51162
QIAamp RNA Blood Mini Kit — for total RNA purification from blood and body fluids		
QIAamp RNA Blood Mini Kit (50)	For 50 RNA preps: 50 QIAamp Mini Spin Columns, 50 QIAshredder™ Spin Columns, Collection Tubes (1.5 ml and 2 ml), RNase-free Reagents and Buffers	52304
QIAamp MinElute™ Virus Kits — for purification of viral RNA from plasma, serum, and cell-free body fluids		
QIAamp MinElute Virus Spin Kit (50)	For 50 preps: 50 QIAamp MinElute Columns, QIAGEN Protease, Carrier RNA, Buffers, Collection Tubes (2 ml)	57704
QIAamp MinElute Virus Vacuum Kit (50)	For 50 preps: 50 QIAamp MinElute Columns, QIAGEN Protease, Carrier RNA, Buffers, Extension Tubes (3 ml), Collection Tubes (2 ml)	57714
QIAamp Virus BioRobot MDx Kit — for automated, high-throughput viral RNA and DNA purification from blood and body fluids		
QIAamp Virus BioRobot MDx Kit (12)	For 12 x 96 preps: 12 QIAamp 96 Plates, RNase-free Buffers, QIAGEN Protease, S-Blocks, Disposable Troughs, Racks with Elution Microtubes CL (0.4 ml), Carrier RNA, Top Elute Fluid, Caps, Tape Pad	965652
Accessories		
Buffer AW1 (concentrate, 242 ml)	242 ml Wash Buffer (1) Concentrate for 1000 spin, 250 midi, or 100 maxi preps	19081
Buffer AW2 (concentrate, 324 ml)	324 ml Wash Buffer (2) Concentrate	19072

Foresight EX1109
Foresight v Personalis
IPR2024-00170

Ordering Information

** Requires use of the QIAGEN 96-Well-Plate Centrifugation System; please inquire.*

Product	Contents	Cat. No.
Buffer AVL (155 ml)	155 ml Viral Lysis Buffer and 4.2 mg Carrier RNA for 250 preps	19073
Buffer AL (216 ml)	216 ml Lysis Buffer AL	19075
Buffer ATL (200 ml)	200 ml Tissue Lysis Buffer for 1000 preps	19076
Buffer AE (240 ml)	240 ml Elution Buffer AE	19077
Collection Tubes (2 ml)	1000 Collection Tubes (2 ml)	19201
QIAGEN Protease (7.5 AU)	7.5 Anson units per vial (lyophilized)	19155
QIAGEN Protease (30 AU)	4 x 7.5 Anson units per vial (lyophilized)	19157
QIAGEN Proteinase K (2 ml)	2 ml (>600 mAU/ml, solution)	19131
QIAGEN Proteinase K (10 ml)	10 ml (>600 mAU/ml, solution)	19133
QIAvac 6S	Vacuum manifold for processing 1–24 QIAGEN spin columns or 1–6 QIAGEN 8-well strips: includes QIAvac 6S Top Plate with flip-up lid, Base, Waste Tray, Blanks, Strip Holder, Rack of Collection Microtubes (1.2 ml)	19503
QIAvac 24	Vacuum manifold for processing 1–24 spin columns: includes QIAvac 24 Base, Lid, Luer Caps	19403
QIAamp Vac Accessory Set	For processing QIAamp Mini Spin Columns on QIAvac 24: 12 VacValves; 500 VacConnectors	19409
QIAvac Luer Adapter Set*	For processing 1–24 QIAGEN Spin Columns on QIAvac 6S: 6 adapters with 4 luer connectors each, 24 plugs	19541
VacConnectors (500)	500 disposable connectors for use with QIAamp and RNeasy Spin Columns and QIAprecipitator™ modules on luer connectors	19407
Vacuum Regulator	For use with QIAvac manifolds	19530
Extension Tubes (3 ml)	For use with QIAGEN Mini or MinElute Columns on a vacuum manifold: 100 per pack	19587

Foresight EX1109
Foresight v Personalis
IPR2024-00170

Trademarks and disclaimers

Patented or patent-pending technology and/or registered or registration-pending trademarks of the QIAGEN Group: QIAGEN®, QIAamp®, QIAprecipitator™, QIAshredder™, QIAvac, BioRobot®, MinElute™.

Amicon and Centricon are registered trademarks of Millipore Corporation.

DACRON is a registered trademark of E. I. du Pont de Nemours and Company.

LABOPORT is a registered trademark of KNF Neuberger GmbH.

Polytron is a registered trademark of Kinematica.

Puritan is a registered trademark of Daigger.

Triton is a registered trademark of Rohm & Haas Company.

Tween is a registered trademark of ICI Americas Inc.

UltraFree is a registered trademark of Millipore Corporation.

Ultra Turrax is a registered trademark of IKA-Analysentechnik GmbH.

The PCR process is covered by US Patents 4,683,195 and 4,683,202 and foreign equivalents owned by Hoffmann-La Roche AG.

QIAGEN Robotic Systems are not available in all countries; please inquire.
BioRobot workstations are intended as microtiter diluting and dispensing devices and QIAamp Kits are intended as general-purpose devices. No claim or representation is intended for their use in identifying any specific organism or for a specific clinical use (diagnostic, prognostic, therapeutic, or blood banking). It is the user's responsibility to validate the performance of BioRobot workstations and QIAamp Kits for any particular use, since their performance characteristics have not been validated for any specific organism. BioRobot workstations and QIAamp Kits may be used in clinical diagnostic laboratory systems after the laboratory has validated their complete system as required by CLIA '88 regulations in the U.S. or equivalents in other countries.

Registered names, trademarks, etc. used in this document, even when not specifically marked as such, are not to be considered unprotected by law.

Foresight EX1109
Foresight v Personalis
IPR2024-00170

Notes

Foresight EX1109
Foresight v Personalis
IPR2024-00170

Notes

Foresight EX1109
Foresight v Personalis
IPR2024-00170

QIAGEN Companies

Please see the inside front cover for contact information for your local QIAGEN office.

QIAGEN Distributors

Argentina
Tecnolab S.A.
Tel: (011) 4555 0010
Fax: (011) 4553 3331
E-mail: info@tecnolab.com.ar
Web site: www.tecnolab.com.ar

Austria
VWR International GmbH
Tel: (01) 576 00 0
Fax: (01) 576 00 350
E-mail: merck-wien@merckeurolab.at
Web site: www.vwr.com

Belgium/Luxemburg
Westburg b.v.
Tel: 0800-1-9815
Fax: (31) 33-4951222
E-mail: info@westburg.nl
Web site: www.westburg.nl

Brazil
Uniscience do Brasil
Tel: 011 3622 2320
Fax: 011 3622 2323
E-mail: info@uniscience.com
Web site: www.uniscience.com

China
Gene Company Limited
Tel: (852)2896-6283
Fax: (852)2515-9371
E-mail:
Hong Kong:info@genehk.com
Beijing: gene@public2.bta.net.cn
Shanghai: gene@public.sta.net.cn
Chengdu: gene@public.cd.sc.cn
Guangzhou:
gzyitao@public.guangzhou.gd.cn

Croatia
INEL Medicinska Tehnika d.o.o.
Tel: (01) 2984-898
Fax: (01) 6520-966
E-mail:
inel-medicinska-tehnika@zg.tel.hr

Cyprus
Scientronics Ltd
Tel: 02-357 22 765416
Fax: 02-357 22 764614
E-mail: a.sarpetsas@biotronics.com.cy

Czech Republic
BIO-CONSULT spol. s.r.o.
Tel/Fax: (420) 2 417 29 792
E-mail: bio-cons@login.cz
Web site: www.bio-consult.cz

Denmark
VWR International A/S
Tel: 43 86 87 88
Fax: 43 86 87 90
E-mail: info@dk.vwr.com
Web site: www.vwr.com

Egypt
Clinilab
Tel: 52 57 212
Fax: 52 57 210
E-mail: Clinilab@link.net

Finland
VWR International Oy
Tel: (09) 804 551
Fax: (09) 8045 5200
E-mail: info@fi.vwr.com
Web site: www.vwr.com

Greece
BioAnalytica S.A.
Tel: (210)-640 03 18
Fax: (210)-646 27 48
E-mail: bioanalyt@hol.gr

Hungary
Kasztel-Med Co. Ltd.
Tel: (01) 385 3887
Fax: (01) 381 0695
E-mail: info@kasztel.hu
Web site: www.kasztel.hu

India
Genetix
Tel: (011)-542 1714
or (011)-515 9346
Fax: (011)-546 7637
E-mail: genetix@nda.vsnl.net.in

Israel
Westburg (Israel) Ltd.
Tel: 08-6650813/4
or 1-800 20 22 20 (toll free)
Fax: 08-6650934
E-mail: info@westburg.co.il
Web site: www.westburg.co.il

Korea
LRS Laboratories, Inc.
Tel: (02) 924-86 97
Fax: (02) 924-86 96
E-mail: webmaster@lrslab.co.kr
Web site: www.lrslab.co.kr

Malaysia
RESEARCH BIOLABS SDN. BHD.
Tel: (603)-8070 3101
Fax: (603)-8070 5101
E-mail: biolabs@tm.net.my
Web site: www.researchbiolabs.com

Mexico
Quimica Valaner S.A. de C.V.
Tel: (55) 55 25 57 25
Fax: (55) 55 25 56 25
E-mail: qvalaner@infosel.net.mx

The Netherlands
Westburg b.v.
Tel: (033)-4950094
Fax: (033)-4951222
E-mail: info@westburg.nl
Web site: www.westburg.nl

New Zealand
Biolab Ltd
Tel: (09) 980 6700
or 0800 933 966
Fax: (09) 980 6788
E-mail:
biosciences@nzl.biolabgroup.com
Web site: www.biolabgroup.com/nzl

Norway
VWR International AS
Tel: 22 90 00 00
Fax: 22 90 00 40
E-mail: info@no.vwr.com
Web site: www.vwr.com

Poland
Syngen Biotech Sp.z.o.o.
Tel: (071) 351 41 06
or 0601 70 60 07
Fax: (071) 351 04 88
E-mail: info@syngen.pl
Web site: www.syngen.com.pl

Portugal
IZASA PORTUGAL, LDA
Tel: (21) 424 7312
Fax: (21) 417 2674

Singapore
Research Biolabs Pte Ltd
Tel: 2731066
Fax: 2734914
E-mail: biolabs@singnet.com.sg

Slovak Republic
BIO-CONSULT Slovakia spol. s.r.o.
Tel/Fax: (02) 5022 1336
E-mail: bio-cons@post.sk
Web site: www.bio-consult.cz

Slovenija
MEDILINE d.o.o.
Tel: (01) 830-80-40
Fax: (01) 830-80-70
or (01) 830-80-63
E-mail: mediline@siol.net

South Africa
Southern Cross Biotechnology
(Pty) Ltd
Tel: (021) 671 5166
Fax: (021) 671 7734
E-mail: info@scb.co.za
Web site: www.scb.co.za

Spain
IZASA, S.A.
Tel: (93) 902.20.30.90
Fax: (93) 902.22.33.66
E-mail: suministros@izasa.es

Sweden
VWR International AB
Tel: (08) 621 34 00
Fax: (08) 760 45 20
E-mail: info@se.vwr.com
Web site: www.vwr.com

Taiwan
TAIGEN Bioscience Corporation
Tel: (02) 2880 2913
Fax: (02) 2880 2916
E-mail: taigen@ms10.hinet.net

Thailand
Theera Trading Co. Ltd.
Tel: (02) 412-5672
Fax: (02) 412-3244
E-mail: theetrad@samart.co.th

Turkey
Medek Medikal Ürünler
ve Saglik Hizmetleri A. S.
Tel: (216) 302 15 80
Fax: (216) 302 15 88
E-mail: makialp@med-ek.com

All other countries
QIAGEN GmbH, Germany

Foresight EX1109
Foresight v Personalis
IPR2024-00170

1023701 02/2003

Foresight EX1109
Foresight v Personalis
IPR2024-00170