(12) INTERNATIONAL APPLICATION PUBLISHED UNDER THE PATENT COOPERATION TREATY (PCT)

(19) World Intellectual Property Organization
International Bureau

(43) International Publication Date
10 September 2004 (10.09.2004)

PCT

(10) International Publication Number
WO 2004/076976 A1

(51) International Patent Classification[7]: G01C 21/36

(21) International Application Number: PCT/GB2004/000794

(22) International Filing Date: 26 February 2004 (26.02.2004)

(25) Filing Language: English

(26) Publication Language: English

(30) Priority Data:
0304358.5 26 February 2003 (26.02.2003) GB
0305175.2 7 March 2003 (07.03.2003) GB

(71) Applicant *(for all designated States except US)*: **TOMTOM B.V.** [NL/NL]; Spuistraat 112-114, NL-1012 VA Amsterdam (NL).

(72) Inventors; and
(75) Inventors/Applicants *(for US only)*: **PINKUS, Ayal** [NL/NL]; TomTom B.V., Spuistraat 112-114, NL-1012 VA Amsterdam (NL). **NEEF, Edwin** [NL/NL]; TomTom B.V., Spuistraat 112-114, NL-1012 VA Amsterdam (NL). **JURGENS, Sven-Erik** [NL/NL]; TomTom B.V., Spuistraat 112-114, NL-1012 VA Amsterdam (NL). **GRETTON, Mark** [GB/GB]; TomTom B.V., 5 Huntsworth Mews, London NW1 6DE (GB).

(74) Agent: **ORIGIN LIMITED**; 52 Muswell Hill Road, London N10 3JR (GB).

(81) Designated States *(unless otherwise indicated, for every kind of national protection available)*: AE, AG, AL, AM, AT, AU, AZ, BA, BB, BG, BR, BW, BY, BZ, CA, CH, CN, CO, CR, CU, CZ, DE, DK, DM, DZ, EC, EE, EG, ES, FI, GB, GD, GE, GH, GM, HR, HU, ID, IL, IN, IS, JP, KE, KG, KP, KR, KZ, LC, LK, LR, LS, LT, LU, LV, MA, MD, MG, MK, MN, MW, MX, MZ, NA, NI, NO, NZ, OM, PG, PH, PL, PT, RO, RU, SC, SD, SE, SG, SK, SL, SY, TJ, TM, TN, TR, TT, TZ, UA, UG, US, UZ, VC, VN, YU, ZA, ZM, ZW.

(84) Designated States *(unless otherwise indicated, for every kind of regional protection available)*: ARIPO (BW, GH, GM, KE, LS, MW, MZ, SD, SL, SZ, TZ, UG, ZM, ZW), Eurasian (AM, AZ, BY, KG, KZ, MD, RU, TJ, TM), European (AT, BE, BG, CH, CY, CZ, DE, DK, EE, ES, FI, FR, GB, GR, HU, IE, IT, LU, MC, NL, PT, RO, SE, SI, SK, TR), OAPI (BF, BJ, CF, CG, CI, CM, GA, GN, GQ, GW, ML, MR, NE, SN, TD, TG).

[Continued on next page]

(54) Title: NAVIGATION DEVICE AND METHOD FOR DISPLAYING ALTERNATIVE ROUTES

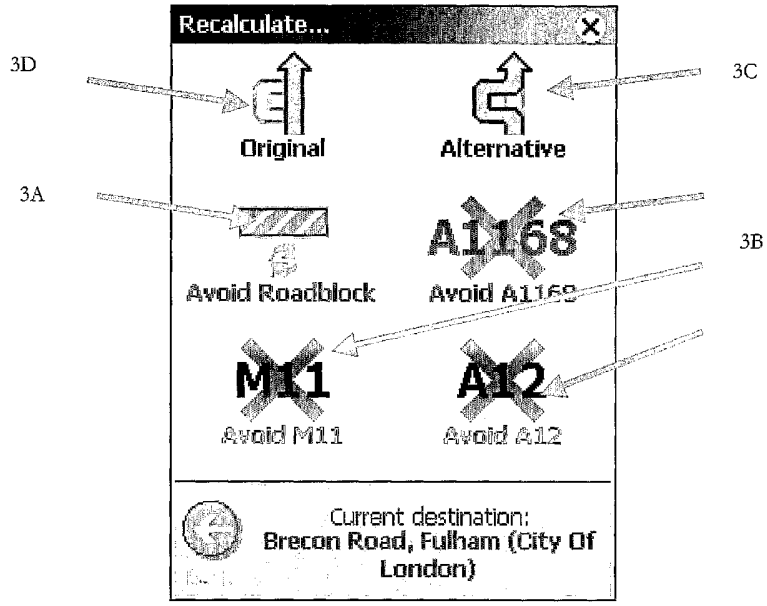

(57) Abstract: A navigation device has a route re-calculation function. This is activated by the user touching the screen to task away from the normal navigation map mode to a menu screen which displays multiple types of route re-calculation options.

WO 2004/076976 A1

Published:
— *with international search report*

For two-letter codes and other abbreviations, refer to the "Guidance Notes on Codes and Abbreviations" appearing at the beginning of each regular issue of the PCT Gazette.

NAVIGATION DEVICE AND METHOD FOR DISPLAYING ALTERNATIVE ROUTES

BACKGROUND OF THE INVENTION

1. Field of the invention

This invention relates to a navigation device that can display navigation data. The device find particular application as an in-car navigation system.

2. Description of the prior art

GPS based devices are well known and are widely employed as in-car navigation systems. Reference may be made to the Navigator series software from the present assignee, TomTom B.V. This is software that, when running on a PDA (such as a Compaq iPaq) connected to an external GPS receiver, enables a user to input to the PDA a start and destination address. The software then calculates the best route between the two end-points and displays instructions on how to navigate that route. By using the positional information derived from the GPS receiver, the software can determine at regular intervals the position of the PDA (typically mounted on the dashboard of a vehicle) and can display the current position of the vehicle on a map and display (and speak) appropriate navigation instructions (e.g. 'turn left in 100 m'). Graphics depicting the actions to be accomplished (e.g. a left arrow indicating a left turn ahead) can be displayed in a status bar and also be superimposed over the applicable junctions/turnings etc in the roads shown in the map itself. Reference may also be made to devices that integrate a GPS receiver into a computing device programmed with a map database and that can generate navigation instructions on a display. The term 'navigation device' refers to a device that enables a user to navigate to a pre-defined destination. The device may have an internal system for receiving location data, such as a GPS receiver, or may merely be connectable to a receiver that can receive location data.

It is known to enable in-car navigation systems to allow the driver, whilst driving in a car along a route calculated by the navigation system, to initiate a route re-calculation. This is useful where the vehicle is faced with construction work or heavy congestion.

Reference may be made to US 6118389 which discloses techniques for calculating a re-route. Initiating the re-route calculation requires activation of a specific detour switch, which may however be inconvenient to the user. Reference may also be made to US 5544060, which enables a device to preview the calculated route by displaying in successive screens each different road and turning that the vehicle has to take; the user however has to manually sequence through each successive screen using a preview switch until he reaches the road that he wants to exclude from the route; he then selects a cancel switch; a new route is calculated which excludes the cancelled road.

The present invention aims to improve on the user interaction aspects of initiating a route re-calculation.

SUMMARY OF THE INVENTION

In a first aspect, there is a navigation device programmed with a map database and software that enables a route to be planned between two user-defined places, wherein the device is further programmed to be able to display a navigation map on a touch screen display, the map updating the current position of the device; wherein the user can, by touching the screen, task away from the navigation map to a menu screen which displays one or more options that, if selected through a further touch action, initiate a re-calculation of the route.

This user interaction approach is simpler, more flexible and more intuitive than prior art approaches that require the user to activate a specific, hardware-based detour switch. Further, since a route re-calculation only requires 2 quick touch actions to the screen, it can be safely completed by a driver even whilst driving.

The menu screen may displays selectable options relating to one or more of the following functions:

(a) calculate alternative route;

(b) calculate alternative route without including a predefined extend of the road ahead;

(c) calculate alternative route without including a predefined road;

(d) revert to original route.

This approach gives the driver far greater flexibility in his route re-calculation options than was available with prior art, hard-wired detour switches.

BRIEF DESCRIPTION OF THE DRAWINGS

The present invention will be described with reference to the accompanying drawings, in which **Figure 1** is a screen shot from a navigation device implementing the present invention; the screen shot shows a plan map view and a status bar running along the bottom of the display;

Figure 2 is a screen shot from the navigation device implementing a 3-D view;

Figure 3 is a screen shot from the navigation device showing various route planning functions that enable a user to require the device to plot a new route to the destination that (i) is an alternative route; (ii) avoids a roadblock immediately ahead; (iii) avoids predefined roads or (iv) is a reversion to the original route.

DETAILED DESCRIPTION

System Overview

The present invention is implemented in software from TomTom B.V. called Navigator. Navigator software runs on a touch screen (i.e. stylus controlled) Pocket PC powered PDA device, such as the Compaq iPaq. It provides a GPS based navigation system when the PDA is coupled with a GPS receiver. The combined PDA and GPS receiver system is designed to be used as an in-vehicle navigation system. The invention may also be implemented in any other arrangement of navigation device, such as one with an integral GPS receiver/computer/display, or a device designed for non-vehicle use (e.g. for walkers) or vehicles other than cars (e.g. aircraft). The navigation device may implement any kind of position sensing technology and is not limited to GPS; it can hence be implemented using other kinds of GNSS (global navigation satellite system) such as the European Galileo system. Equally, it is not limited to satellite based location/velocity systems but can equally be deployed using ground-based beacons or any other kind of system that enables the device to determine its geographic location.

Navigator software, when running on a PDA, results in a navigation device that causes the normal navigation mode screen shown in **Figure 1** to be displayed. This view provides driving instructions using a combination of text, symbols, voice guidance and a moving map. Key user interface elements are the following: a 2-D map **1** occupies most of the screen. The map shows the user's car and its immediate surroundings, rotated in such a way that the direction in which the car is moving is always "up". Running across the bottom quarter of the screen is the status bar **2**. The current location of the device, as the device itself determines using conventional GPS location finding and its orientation (as inferred from its direction of travel) is depicted by an arrow **3**. The route calculated by the device (using route calculation algorithms stored in device memory as applied to map data stored in a map database in device memory) is shown as darkened path **4** superimposed with arrows giving the travel direction. On the darkened path **4**, all major actions (e.g. turning corners, crossroads, roundabouts etc.) are schematically depicted by arrows **5** overlaying the path **4**. The status bar **2** also includes at its left hand side a schematic **6** depicting the next action (here, a right turn). The status bar **2** also shows the distance to the next action (i.e. the right turn – here the distance is

220 meters) as extracted from a database of the entire route calculated by the device (i.e. a list of all roads and related actions defining the route to be taken). Status bar **2** also shows the name of the current road **8**, the estimated time before arrival **9** (here 2 minutes and 40 seconds), the actual estimated arrival time **10** (11.36am) and the distance to the destination **11** (1.4Km). The GPS signal strength is shown in a mobile-phone style signal strength indicator **12**.

If the user touches the centre of the screen **13**, then a navigation screen menu is displayed; from this menu, other core navigation functions within the Navigator application can be initiated or controlled. Allowing core navigation functions to be selected from a menu screen that is itself very readily called up (e.g. one step away from the map display to the menu screen) greatly simplifies the user interaction and makes it faster and easier.

The area of the touch zone which needs to be touched by a user is far larger than in most stylus based touch screen systems. It is designed to be large enough to be reliably selected by a single finger without special accuracy; i.e. to mimic the real-life conditions for a driver when controlling a vehicle; he or she will have little time to look at a highly detailed screen with small control icons, and still less time to accurately press one of those small control icons. Hence, using a very large touch screen area associated with a given soft key (or hidden soft key, as in the centre of the screen **13**) is a deliberate design feature of this implementation. Unlike other stylus based applications, this design feature is consistently deployed throughout Navigator to select core functions that are likely to be needed by a driver whilst actually driving. Hence, whenever the user is given the choice of selecting on-screen icons (e.g. control icons, or keys of a virtual keyboard to enter a destination address, for example), then the design of those icons/keys is kept simple and the associated touch screen zones is expanded to such a size that each icon/key can unambiguously be finger selected. In practice, the associated touch screen zone will be of the order of at least 0.7 cm^2 and will typically be a square zone. In normal navigation mode, the device displays a map. Touching the map (i.e. the touch sensitive display) once (or twice in a different implementation) near to the screen centre (or any part of the screen in another implementation) will then call up a navigation menu (see **Figure 3**) with large icons corresponding to various navigation functions, such as the

option to calculate an alternative route, and re-calculate the route so as to avoid the next section of road (useful when faced with an obstruction or heavy congestion); or recalculate the route so as to avoid specific, listed roads.

The actual physical structure of the device itself may be fundamentally no different from any conventional handheld computer, other than the integral GPS receiver or a GPS data feed from an external GPS receiver. Hence, memory stores the route calculation algorithms, map database and user interface software; a microprocessor interprets and processes user input (e.g. using a device touch screen to input the start and destination addresses and all other control inputs) and deploys the route calculation algorithms to calculate the optimal route. 'Optimal' may refer to criteria such as shortest time or shortest distance, or some other user-related factors.

More specifically, the user inputs his start position and required destination in the normal manner into the Navigator software running on the PDA using a virtual keyboard. The user then selects the manner in which a travel route is calculated: various modes are offered, such as a 'fast' mode that calculates the route very rapidly, but the route might not be the shortest; a 'full' mode that looks at all possible routes and locates the shortest, but takes longer to calculate etc. Other options are possible, with a user defining a route that is scenic – e.g. passes the most POI (points of interest) marked as views of outstanding beauty, or passes the most POIs of possible interest to children or uses the fewest junctions etc.

Roads themselves are described in the map database that is part of Navigator (or is otherwise accessed by it) running on the PDA as lines – i.e. vectors (e.g. start point, end point, direction for a road, with an entire road being made up of many hundreds of such sections, each uniquely defined by start point/end point direction parameters). A map is then a set of such road vectors, plus points of interest (POIs), plus road names, plus other geographic features like park boundaries, river boundaries etc, all of which are defined in terms of vectors. All map features (e.g. road vectors, POIs etc.) are defined in a co-ordinate system that corresponds or relates to the GPS co-ordinate system, enabling a device's position as determined through a GPS system to be located onto the relevant road shown in a map.

Route calculation uses complex algorithms that are part of the Navigator software. The algorithms are applied to score large numbers of potential different routes. The Navigator software then evaluates them against the user defined criteria (or device defaults), such as a full mode scan, with scenic route, past museums, and no speed camera. The route which best meets the defined criteria is then calculated by a processor in the PDA and then stored in a database in RAM as a sequence of vectors, road names and actions to be done at vector end-points (e.g. corresponding to pre-determined distances along each road of the route, such as after 100 meters, turn left into street x).

Route re-calculation

An implementation of the present invention facilitates access to functions that enable alternative routes to be calculated by placing a menu of graphical icons (or any other kind of way or option to allow selection of the functions, such as lists, check boxes etc.) on a menu screen that is easily accessed from the main navigation screen – i.e. the screen that is displayed during actual or simulated/preview navigation. As noted above, in normal navigation mode (and also the 'demonstrate route' mode for simulated/preview navigation – see later), the device displays an animated map that shows the location of the navigation device as the journey progresses. Touching the map (i.e. the touch sensitive display) once (or twice in a different implementation) near to the screen centre (or any part of the screen in another implementation) will then call up a 'Recalculate' menu screen (see **Figure 3**) with large icons corresponding to various navigation functions, such as the option to calculate an alternative route **3C** ; re-calculate the route so as to avoid the next section of road **3A** (useful when faced with a roadblock); and recalculate the route so as to avoid specific, listed roads **3B**. The following sections describe these and other alternative route functions in more detail. Some of these functions may be initiated directly from the Recalculate menu screen; others may be at a deeper level in the menu structure. However, all can be initiated by selecting options such as graphical icons, lists, check boxes which are unambiguously associated with touch screen areas that are large enough to allow the user to select them with a fingertip whilst safely driving, typically at least $0.7cm^2$ in area.

Alternative route function: 'avoid roadblock'

With this function, a user could select an 'avoid roadblock' function **3A** that causes the system to recalculate a route on the basis that the road immediately ahead (or some user defined or system default distance ahead, e.g. 100 metres) is blocked.

As noted earlier, a route planning algorithm in Navigator will work out an optimal route (optimal may refer to criteria such as shortest time or shortest distance, or some other factors) by exploring different routes and scoring them against the required criteria. In this way, one route which best meets the defied criteria is generated. If whilst actually driving along a route, an unexpected event occurs that requires the user to detour away from the pre-calculated route, such as a roadblock, the user can inform the Navigator software that his immediate road ahead is blocked and require the software to re-calculate a new route, taking his current position as a new starting position, but taking the first turning possible away from the old calculated route. This first turning might be ahead or behind the current car position. The system, in constructing the new route, explores a large number of possible routes to the destination from the current position, but excludes the road immediately ahead.

Selecting the 'avoid roadblock' function **3A** has to be fast and involve the absolute minimum number of screen interactions to minimise driver distraction. This can be achieved by the user being able to switch from normal navigation mode (in which the current position of the car is shown on a map, as shown in **Figures 1** or **2**) to a Recalculate menu mode, as shown in **Figure 3**, by pressing a key or selecting any point on the screen or selecting a given region of the screen. Where a given region has to be selected (e.g. the approximate centre of the map), then the touch activation zone is sufficiently large that it can readily and reliably be selected by a user with his fingertip without needing to look carefully at the screen for more than a moment. A touch zone of $0.7cm^2$, centred on the map, has been found to be sufficient.

The **Figure 3** menu mode displays a small number of large icons, one of which is the 'avoid roadblock' **3A** option. This can be selected with one touch; when this occurs, the software re-calculates the route and gives instructions in the normal manner (voice;

and/or on screen navigation prompts) to allow the user to proceed to his destination but avoid the road immediately ahead.

Alternative route function: 'avoid specific road'

This function allows a user to easily and rapidly select a specific, named road **3B** to mark as blocked so that he can use information from real time traffic information broadcasts on the radio.

When listening to the radio, a user may hear that a specific road or perhaps part of a motorway between defined junctions is blocked or heavily congested. If that road is on the user's calculated route, even though it might be many kilometres away, then he will want to have the software recalculate a new route as soon as possible. The system does this by calculating a route to the final destination using the current position as a start position and exploring different routes to the destination, but excluding the road indicated as to be avoided. The new route will then be calculated using normal route planning algorithms and the user diverted onto the new route.

Selecting the 'avoid specific road' function **3B** has also to be fast and involve the absolute minimum number of screen interactions to minimise driver distraction. This can be achieved by the user being able to switch from normal navigation mode (**Figures 1** or **2**, in which the current position of the car is shown on a map) to a Recalculate menu mode as described earlier (e.g. selecting a given region on the screen); the Recalculate menu displays a small number of large icons, several of which are named roads **3B** on the route which, if selected, can be selected with one touch; when this occurs, the software re-calculates the route and gives instructions in the normal manner (voice; and/or on screen navigation prompts) to allow the user to proceed to his destination but avoid the road immediately ahead. The device may have limited screen space to display many roads for exclusion; the Figure 3 implementation lists three. These three are selected using various weighting parameters (e.g. a prior history of the user wishing to avoid them; the next three major roads) or from dynamic, updated travel information received by the device from a traffic information data source, indicating that these are the next three roads on the route that are affected by traffic disturbance of some kind.

A final 'original' option **3D** allows the user to clear all earlier re-calculation inputs and re-calculate the original route.

A number of other navigation functions can be initiated from deeper in the menu hierarchy than the **Figure 3** menu. These are described below.

Alternative route function: 'penalties'

With this function, the system can also enable a user to mark certain points/regions as blocked or slow or to give penalties (or their inverse, awards) to a point/region to weight routing away from (or to) that point/region and have the system auto calculate an alternative route (or indeed the original route).

Route planning algorithms operate by assigning scores to different possible routes in relation to different criteria (e.g. scores for the time of journey, scores for the length of journey etc) and then determining which route has the best overall score. Normally, the user cannot interact directly with how the algorithm treats roads, junctions and other route features. But in Navigator it is possible: the user can directly alter the way the route planning algorithm evaluates or scores a route by awarding penalties/awards to any items, e.g. points/regions, that affect the route planning scoring. The route planning algorithm stores a list of all roads/junctions in vector form associated with each calculated route from start to destination; each item (e.g. road section, turning etc.) will typically have several parameters associated with it that are used in the scoring process to evaluate a best route. Hence, it is straightforward to alter the route scoring based on giving different weightings to different kinds of items. For example, one user might dislike junctions; in which case, the route scoring could count junction numbers in alternate routes and then weight more favourably routes with fewer junctions. Similarly, roads within certain user defined regions could have some of their scoring parameters altered to change the likelihood of a route being selected using them (either to increase or decrease the likelihood of selection). To enable the user to alter the weightings given to different items, the device could display a list of those items adjacent to check boxes (e.g. 'Like' and 'Don't Like'). Each user could then set up a personal profile that defined his or her personal preferences (e.g. one person might always prefer the scenic and

historic; another straightforward driving with minimal junctions; yet another, always the shortest possible distance, irrespective of complexity).

Also, a user could penalise specific complex junctions on a simulated route (see 'Demonstrate route' function below) if they disliked them, or else could indicate that he wanted fewer turnings and the device would then count the number of turnings in alternative routes and give preference to the routes with fewer turnings.

Alternative route function: auto generate

A user can also simply select 'alternative route' **3C** if he wants to see another possible route: the system then recalculates a route, not using at least 80% of the roads from the prior route. If that route is still unsuitable, the user can obtain another alternative route again by selecting again 'alternative route' **3C**.

Alternative route planning: selecting calculation modes

A user can select 'normal', 'strict' and 'fast' planning modes: each results in different route planning algorithms being used that calculate the route either normally, or strictly (which may take many minutes as a great many permutations are explored) or quickly, (which may take a few seconds only as many simplifying assumptions are made about the optimal route).

Alternative route planning: POI navigation

The system offers a "navigate to nearby point of interest" option. This first provides a hot list of POI (point of interest) icons for the small set of most often used POI types.

The list is initialized to generally useful POI types (for car drivers) like petrol stations, restaurants, parking spots etc. Hence, a user can very readily ask the program to calculate a new route that will navigate him to the nearest petrol station etc. This can happen during the course of a drive – i.e. the user realises that he is low on fuel and will need the route to be re-calculated to pass by a petrol station, whilst still maintaining the original destination.

The system can in effect recalculate a route with the closest relevant POI as the destination and the current location as the start. The user can manually adjust the types to suit his own needs. Furthermore, at least one of the icons will self-adjust to the most recently used type not already in the list.

Re-calculating a route to include a POI requires the system to implement a search for POIs. This would normally be done by defining a point and searching outwards from that point to locate relevant POIs. Applying this approach to finding POIs along a route would be impossible on a PDA because you would in effect be replicating the search for all points along the route (potentially millions of separate searches for a long journey, which would be too great a load). In this implementation, this approach is reversed by taking each relevant POI and seeing if it is on a vector/line that that also defines part of the route – a simple and fast correlation process between POIs and route lines, that can rapidly be repeated for all POIs of relevance and for each candidate route. This POI location method can be used whenever POIs need to be found. When re-calculating a route so that it includes a POI of a given type, the route calculation algorithm takes as its start position the current location and maintains the original destination. It then selects only those routes that include the POI of the required type (using the simple correlation process of seeing if any vector of the calculated route matches the vector associated with each POI of the required type) and weights most favourably those with a POI nearest the current location.

Demonstrate route function

The present invention implements a 'Demonstrate route' preview or simulation function. This allows the user to see the entire proposed route, as calculated by the Navigator software, in animated fashion as if he were driving it. First, a route is calculated in the normal manner. Then, a 'demonstrate route' icon or menu option is automatically displayed by the device after the route is calculated. As with all major navigation functions, this is represented by a large icon with an associated touch screen area large enough to be readily selected by a fingertip, such as at least 0.7 cm^2. After the icon has been selected, the device displays a sequence of preview maps that shows the car driving from the start position to the destination. Generally, the maps will be animated to scroll

past a fixed point representing the vehicle position, although it is possible to arrange for the position of the vehicle to advance as though travelling along a road, or for there to be some combination of relative movement between car and route.

Other useful control functions can mimic the video/media player control functions found on a PC; for example, to fast forward through the simulation/preview and to pause, play, and rewind. The status bar data (especially time of arrival, further journey time and remaining distance) should remain accurate as the off-line simulation of the route plays. This gives the user a good feel for not only the spatial definition of the route, but also its temporal definition.

During normal preview (e.g. when a 'play' button on a media player style control is selected), each road name is displayed in the status bar **8**. One possible refinement is to only display the road name if it will remain visible for more than a predetermined time (e.g. 1 second). Whilst the preview is fast forwarding, then road names may not be displayed if they would not be legible (in less sophisticated implementations this feature may be absent). Road names may also displayed if the pause is selected or if the simulated speed of the vehicle is otherwise slowed down below a defined level.

During normal preview, road names are therefore displayed in the status bar 8 or superimposed over the road itself in the map (whether 2-d or 3-D), in the same way that they are displayed during normal real-time operation, greatly enhancing the realism and utility of the preview function. For example, the 'demonstrate route' function is very helpful in enabling users/passengers to assess and confirm that the route is acceptable. The user can familiarise himself with the road names in the same context as they will appear on the device when actually driving. For some vehicles, such as taxis, this is especially valuable for the passenger. It is also very useful for point-of-sale purposes to catch the eye of potential purchasers of the Navigator software and GPS system; hence, at a retail store, replaying a route on a PDA using Navigator may be desirable.

The user can therefore, with the present invention, ask for the entire journey along the route to be simulated on a map displayed on the device: in the conventional manner, the position of the car on the displayed map is marked with an arrow; as the journey

simulation progresses, the streets move past the car arrow, which is optimally fixed approximately 1/3rd up from the bottom of the map, and centred. The car is hence shown actually navigating along the route calculated by the Navigator software. In this way, a user can check that the route looks acceptable; the user may for example, prefer a route that avoids a certain region and he may want to confirm that the route suggested by the program does bypass it. Or the user may simply feel more comfortable driving a route that he has had fully described and shown to him by the software before hand. In a point of sale system, the simulation can continuously repeat.

The animated maps may be in 2-D view (e.g. as shown in **Figure 1**) or in 3-D, as shown in **Figure 2**. 3-D animations (as well as real-time 3-D map views) can be altered to change the simulated viewing height; for example, for aviation use, it may be very useful to be able to show a 3-D view of an entire flight route from a simulated height useful to the pilot. This height may vary automatically depending on the height of the plane; in addition, simulated height (as well as other kinds of perspective alteration) controls can be added as, for example, control icons on the edge of the screen. The simulated height above ground and/or perspective of the 3-D map can also alter automatically as the rate of progress alters – e.g. for very rapid preview (corresponding to very fast vehicle speed) then the simulated height above ground can increase to give better visibility.

The demonstrate route function can also be usefully deployed when the user wishes to have an alternative route calculated by the device and wants that alternative route animated as an off-line simulation or preview. For example, whilst the simulation is running, the user can, by touching the screen, task away from the simulation to a menu screen (**Figure 3**) which displays one or more options that, if selected through a touch action, initiate a re-calculation of the route. The menu screen displays icons relating to one or more of the following functions:

(a) calculate alternative route;

(b) calculate alternative route without including a predefined extent of the road ahead;

(c) calculate alternative route without including a predefined road;

Once a re-calculation has been performed, the device automatically displays an option to initiate a simulation of that recalculated route.

Equally, the preview function can be initiated during actual, real progress along a calculated route; for example, the user may wish to re-calculate a new route (perhaps finding heavy congestion); he then touches the screen to task away from the navigation map and then reaches the menu screen that displays the route re-calculation options (**Figure 3**). Once re-calculation is complete, the device automatically displays a 'demonstrate route' icon. This is particularly useful after re-calculation during an actual journey as the user may wish to verify that that the re-calculated route is appropriate (e.g. does not use roads that the user now knows should not be used because of congestion etc.) by viewing the preview/simulation.

CLAIMS

1. A navigation device programmed with a map database and software that enables a route to be planned between two user-defined places, wherein the device is further programmed to be able to display a navigation map on a touch screen display, the map updating the current position of the device; wherein the user can, by touching the screen, task away from the navigation map to a menu screen which displays one or more options that, if selected through a further touch action, initiate a re-calculation of the route.

2. The device of Claim 1 in which the task away is initiated by a single or a double touch anywhere on the touch screen.

3. The device of Claim 1 in which the task away is initiated by a single or a double touch at a region of the touch screen sized to be sufficiently large to allow it to be reliably selected with a fingertip.

4. The device of Claim 3 in which the region is centred on the navigation map.

5. The device of Claim 3 or 4 in which the region is at least $0.7cm^2$ in area.

6. The device of any preceding Claim in which the menu screen displays selectable options relating to one or more of the following functions:

(a) calculate alternative route;

(b) calculate alternative route without including a predefined extent of the road ahead;

(c) calculate alternative route without including a predefined road;

(d) revert to original route.

7. The device of Claim 1 in which the navigation map is a preview or simulation of a journey along the route and the current position is a simulated current position.

8. The device of Claim 1 in which each selectable option is one of the following:

(a) a graphical icon;

(b) a control or check box; or

(c) a name.

9. The device of any preceding Claim which enables a user to alter the way a route is evaluated or scored by a route calculation algorithm.

10. The device of Claim 9 in which enabling the altering of the way a route is evaluate or scored is achieved by allowing the user to alter the weight given to any item used in the evaluation of a route.

11. The device of any preceding Claim in which the map is a 3-D map.

12. The device of any preceding Claim that displays options that allow the user to initiate different route calculation modes.

13. The device of any preceding Claim that displays an option to recalculate a route to include a POI of a user-defined type.

14. The device of Claim 13 in which the device correlates vectors of POIs of the defined type to vectors in different routes to enable it to select only those routes that include the required POI.

15. A method of displaying navigation information, the method being deployed in a navigation device programmed with a map database and software that enables a route to be planned between two user-defined places, wherein the device is further programmed to be able to display a navigation map on a touch screen display, the map updating the current position of the device; characterised in that the user can, by touching the screen, task away from the navigation map to a menu screen which displays one or more options that, if selected through a further touch action, initiate a re-calculation of the route.

16. Computer software adapted to enable a navigation device, programmed with a map database and software that enables a route to be planned between two user-defined places and displayed on a navigation map on a touch screen display, the map updating

the current position of the device; wherein the software enables a user, by touching the screen, task away from the navigation map to a menu screen which displays one or more options that, if selected through a further touch action, initiate a re-calculation of the route

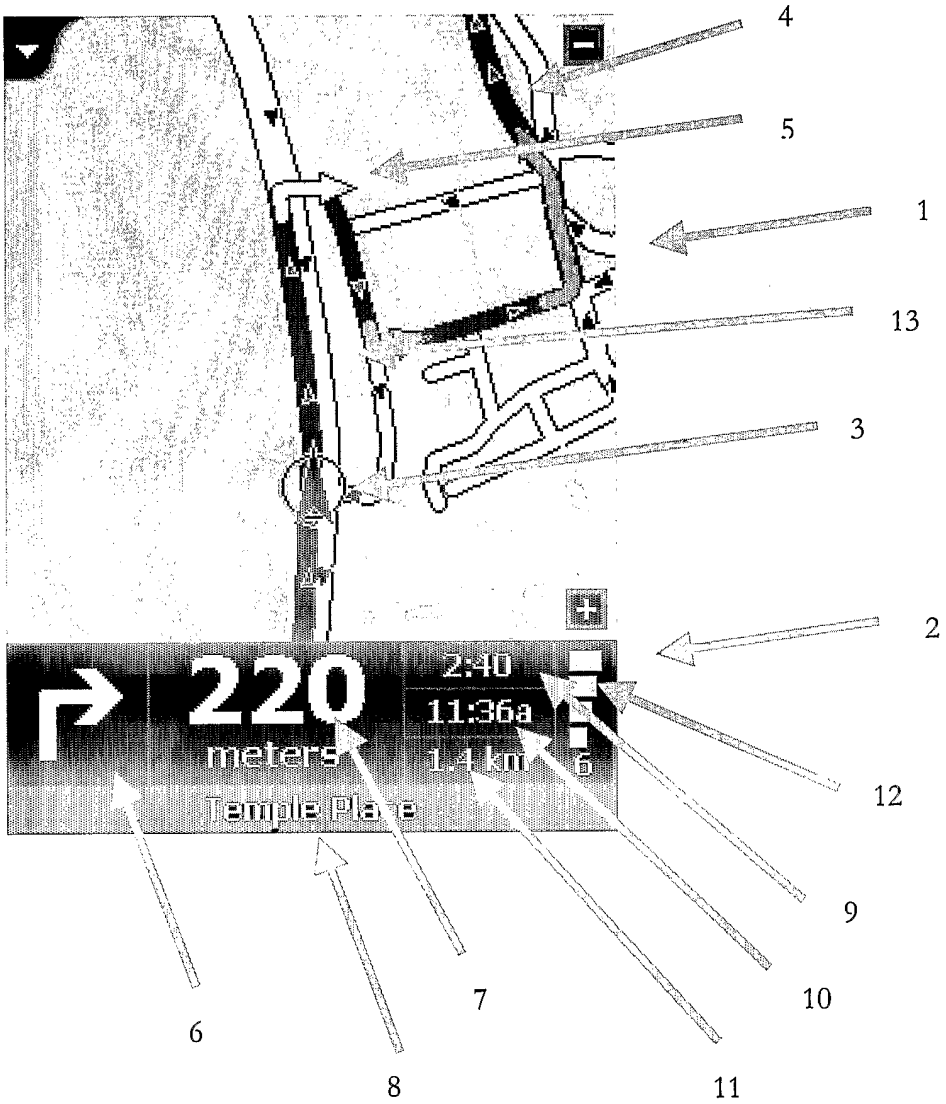
4
5
1
13
3
2
220
meters
2:40
11:36a
1.4 km
6
Temple Place
12
9
10
11
7
6
8

Figure 1

Figure 2

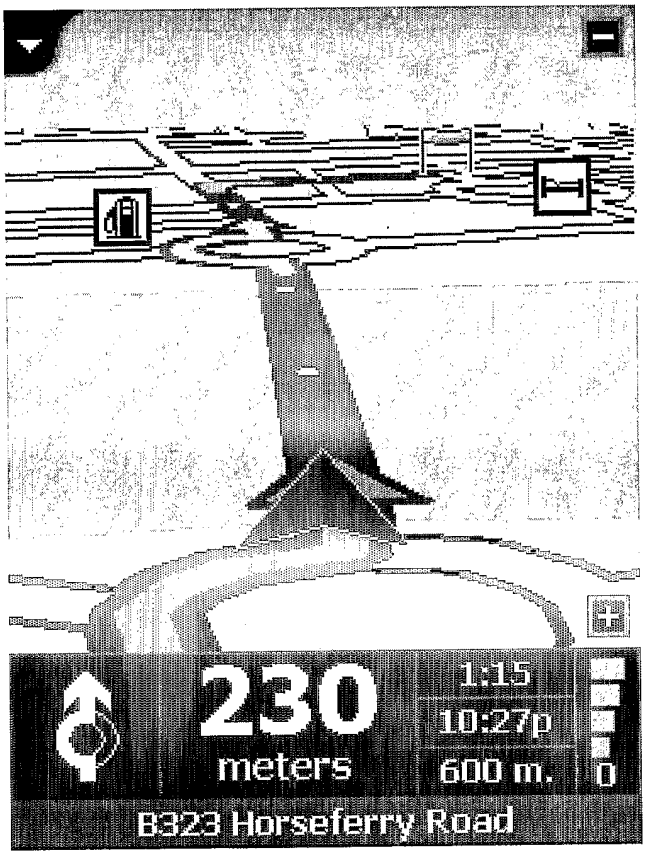

Figure 3

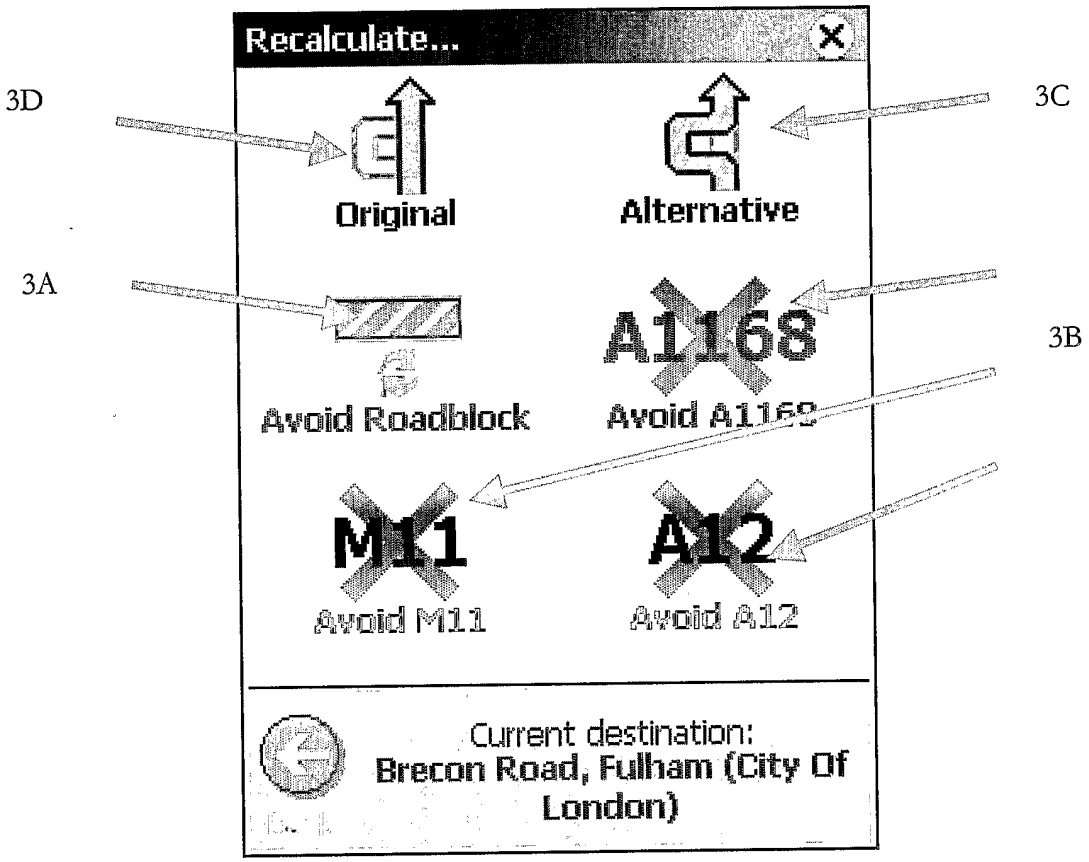
Recalculate...
3D
3C
Original
Alternative
3A
A1168
3B
Avoid Roadblock
Avoid A1168
M11
A12
Avoid M11
Avoid A12
Current destination:
Brecon Road, Fulham (City Of London)

INTERNATIONAL SEARCH REPORT

Int onal Application No
PCT/GB2004/000794

A. CLASSIFICATION OF SUBJECT MATTER
IPC 7 G01C21/36

According to International Patent Classification (IPC) or to both national classification and IPC

B. FIELDS SEARCHED

Minimum documentation searched (classification system followed by classification symbols)
IPC 7 G01C

Documentation searched other than minimum documentation to the extent that such documents are included in the fields searched

Electronic data base consulted during the international search (name of data base and, where practical, search terms used)

WPI Data, PAJ, EPO-Internal

C. DOCUMENTS CONSIDERED TO BE RELEVANT

Category °	Citation of document, with indication, where appropriate, of the relevant passages	Relevant to claim No.
Y	US 5 859 628 A (ROSS ET AL) 12 January 1999 (1999-01-12) column 2, line 30 - line 43 column 9, line 57 - line 65; figures ---	1-16
Y	US 5 928 307 A (OSHIZAWA ET AL) 27 July 1999 (1999-07-27) column 4, line 15 - line 36 column 5, line 61 - line 64; figures ---	1-16
A	US 5 877 751 A (KANEMITSU ET AL) 2 March 1999 (1999-03-02) column 2 , sentence 41 - sentence 48 column 13, line 48 - line 57 column 15, line 29 - line 50; figures 26,27,31 --- -/--	1

[X] Further documents are listed in the continuation of box C.

[X] Patent family members are listed in annex.

° Special categories of cited documents :

"A" document defining the general state of the art which is not considered to be of particular relevance

"E" earlier document but published on or after the international filing date

"L" document which may throw doubts on priority claim(s) or which is cited to establish the publication date of another citation or other special reason (as specified)

"O" document referring to an oral disclosure, use, exhibition or other means

"P" document published prior to the international filing date but later than the priority date claimed

"T" later document published after the international filing date or priority date and not in conflict with the application but cited to understand the principle or theory underlying the invention

"X" document of particular relevance; the claimed invention cannot be considered novel or cannot be considered to involve an inventive step when the document is taken alone

"Y" document of particular relevance; the claimed invention cannot be considered to involve an inventive step when the document is combined with one or more other such documents, such combination being obvious to a person skilled in the art.

"&" document member of the same patent family

Date of the actual completion of the international search	Date of mailing of the international search report
15 June 2004	23/06/2004

Name and mailing address of the ISA	Authorized officer
European Patent Office, P.B. 5818 Patentlaan 2 NL - 2280 HV Rijswijk Tel. (+31-70) 340-2040, Tx. 31 651 epo nl, Fax: (+31-70) 340-3016	Hoekstra, F

Form PCT/ISA/210 (second sheet) (January 2004)

Hyundai Exhibit 1019, Page 25 of 27
Hyundai Motor Company v. Mel Navip LLC
IPR2024-00172

INTERNATIONAL SEARCH REPORT

In ional Application No
PCT/GB2004/000794

C.(Continuation) DOCUMENTS CONSIDERED TO BE RELEVANT

Category °	Citation of document, with indication, where appropriate, of the relevant passages	Relevant to claim No.
A	US 5 243 528 A (LEFEBVRE) 7 September 1993 (1993-09-07) column 2, line 61 - line 65 column 4, line 62 -column 5, line 63; figure 2 -----	1

Form PCT/ISA/210 (continuation of second sheet) (January 2004)

Hyundai Exhibit 1019, Page 26 of 27
Hyundai Motor Company v. Mel Navip LLC
IPR2024-00172

INTERNATIONAL SEARCH REPORT

International Application No
PCT/GB2004/000794

Patent document cited in search report		Publication date	Patent family member(s)			Publication date
US 5859628	A	12-01-1999	WO	9519030	A1	13-07-1995
US 5928307	A	27-07-1999	CA	2225974	A1	15-07-1998
			EP	0854463	A2	22-07-1998
			JP	3065978	B2	17-07-2000
			JP	10221100	A	21-08-1998
US 5877751	A	02-03-1999	JP	3330239	B2	30-09-2002
			JP	8095708	A	12-04-1996
			JP	3469329	B2	25-11-2003
			JP	8110755	A	30-04-1996
			DE	69524340	D1	17-01-2002
			DE	69524340	T2	14-08-2002
			EP	0703525	A1	27-03-1996
US 5243528	A	07-09-1993	JP	5502521	T	28-04-1993
			JP	3499551	B2	23-02-2004
			WO	9204683	A1	19-03-1992