US007502686B1

(12) **United States Patent**
Pemble et al.

(10) **Patent No.: US 7,502,686 B1**
(45) **Date of Patent: Mar. 10, 2009**

(54) **SYSTEM AND METHOD UTILIZING NON-GPS SATELLITE CONTENT IN REAL-TIME NAVIGATION**

(75) Inventors: **Clifton A. Pemble**, Olathe, KS (US); **Michael R. Wiegers**, Paola, KS (US)

(73) Assignee: **Garmin Ltd.** (KY)

(*) Notice: Subject to any disclaimer, the term of this patent is extended or adjusted under 35 U.S.C. 154(b) by 626 days.

(21) Appl. No.: **10/874,823**

(22) Filed: **Jun. 23, 2004**

(51) **Int. Cl.**
G01C 21/00 (2006.01)
G06F 19/00 (2006.01)

(52) **U.S. Cl.** **701/213**; 701/201; 340/995.13; 455/414.2

(58) **Field of Classification Search** 701/201, 701/202, 207, 208, 209, 210, 211, 213; 340/995.13–995.27; 455/414.2, 414.3, 456.1, 455/456.2, 456.3
See application file for complete search history.

(56) **References Cited**

U.S. PATENT DOCUMENTS

5,629,804 A * 5/1997 Tomono 359/576
5,689,252 A * 11/1997 Ayanoglu et al. 340/991
5,911,773 A * 6/1999 Mutsuga et al. 701/200
5,933,100 A * 8/1999 Golding 340/995.13
6,014,569 A * 1/2000 Bottum 455/466
6,222,485 B1 * 4/2001 Walters et al. 342/357.13
6,266,614 B1 * 7/2001 Alumbaugh 701/211
6,324,592 B1 * 11/2001 Hindman 710/3
6,505,121 B1 * 1/2003 Russell 701/213
6,643,581 B2 * 11/2003 Ooishi 701/207
6,738,711 B2 * 5/2004 Ohmura et al. 701/208
6,865,480 B2 * 3/2005 Wong 701/210
6,907,344 B2 * 6/2005 Nakagawa 701/200
6,929,475 B1 * 8/2005 Dragan 433/89
6,963,799 B2 * 11/2005 Kita et al. 701/117
7,062,379 B2 * 6/2006 Videtich 701/210
2001/0001848 A1 * 5/2001 Oshizawa et al. 701/210
2002/0173908 A1 * 11/2002 Sakamoto 701/211
2003/0074135 A1 * 4/2003 Watanabe et al. 701/209
2003/0139150 A1 * 7/2003 Rodriguez et al. 455/90
2003/0216846 A1 * 11/2003 Chang 701/36
2003/0229446 A1 12/2003 Boscamp et al.
2004/0030489 A1 * 2/2004 Huang et al. 701/117
2005/0027449 A1 * 2/2005 Marsh 701/213
2005/0049785 A1 * 3/2005 Vergin 701/209
2005/0099322 A1 * 5/2005 Wainfan et al. 340/995.13
2005/0102102 A1 * 5/2005 Linn 701/210
2005/0283311 A1 * 12/2005 Ohler 701/209
2006/0094443 A1 * 5/2006 Dowling et al. 455/456.1
2006/0105708 A1 * 5/2006 Maeda et al. 455/12.1
2006/0122925 A1 * 6/2006 Wesby 705/35

* cited by examiner

Primary Examiner—Tan Q Nguyen
(74) *Attorney, Agent, or Firm*—Samuel M. Korte

(57) **ABSTRACT**

A navigation device is provided that includes a GPS input that receives GPS information from a GPS satellite. The system also includes a non-GPS input that receives real-time content from a non-GPS source. The real-time content includes updates to travel conditions. The system also includes a navigation module that analyses the updates from the non-GPS source in conjunction with the GPS information form the GPS satellite.

14 Claims, 5 Drawing Sheets

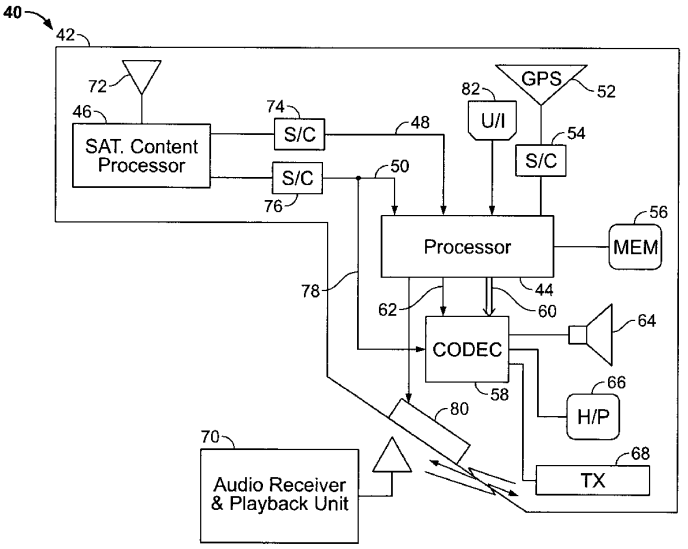

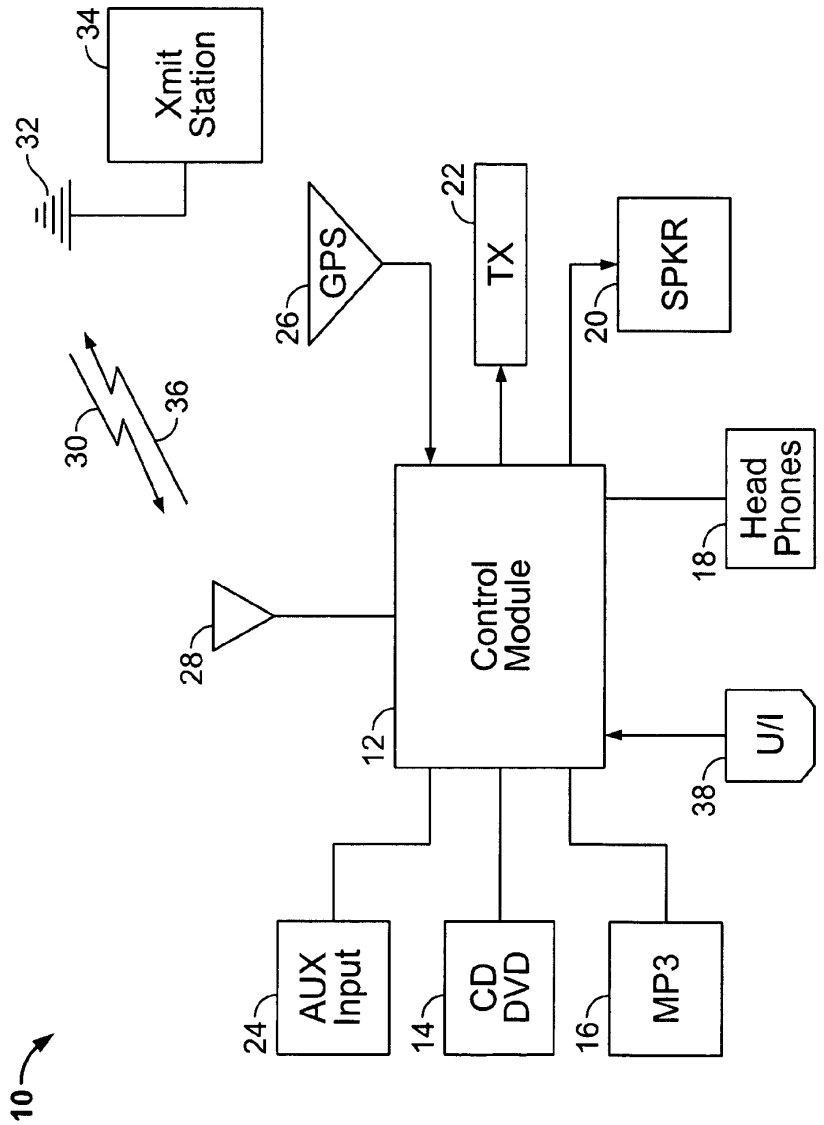
10
Control Module
12
AUX Input
24
CD DVD
14
MP3
16
U/I
38
Head Phones
18
SPKR
20
TX
22
GPS
26
28
30
36
Xmit Station
34
32

FIG. 1

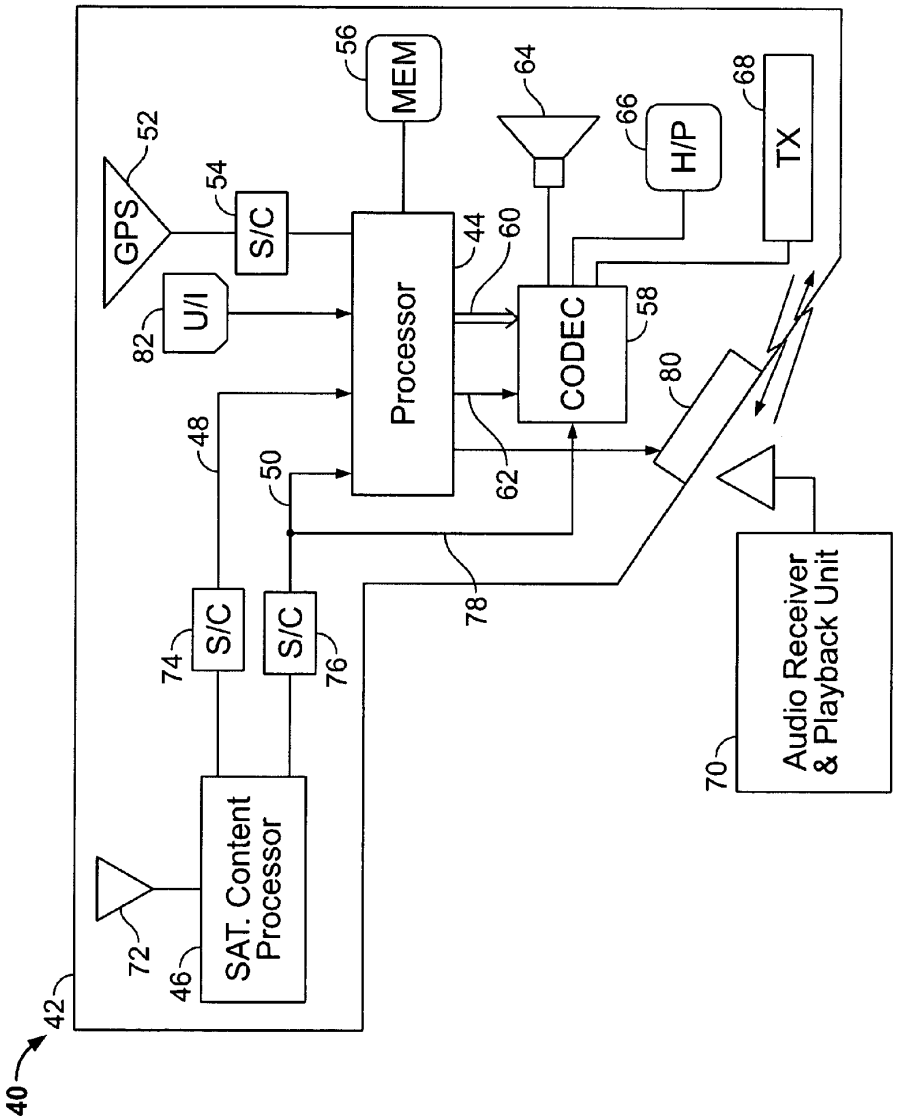
40
42
GPS
52
S/C
54
MEM
56
U/I
82
Processor
44
60
CODEC
58
64
H/P
66
TX
68
80
48
50
62
78
S/C
74
S/C
76
SAT. Content Processor
46
72
Audio Receiver & Playback Unit
70

FIG. 2

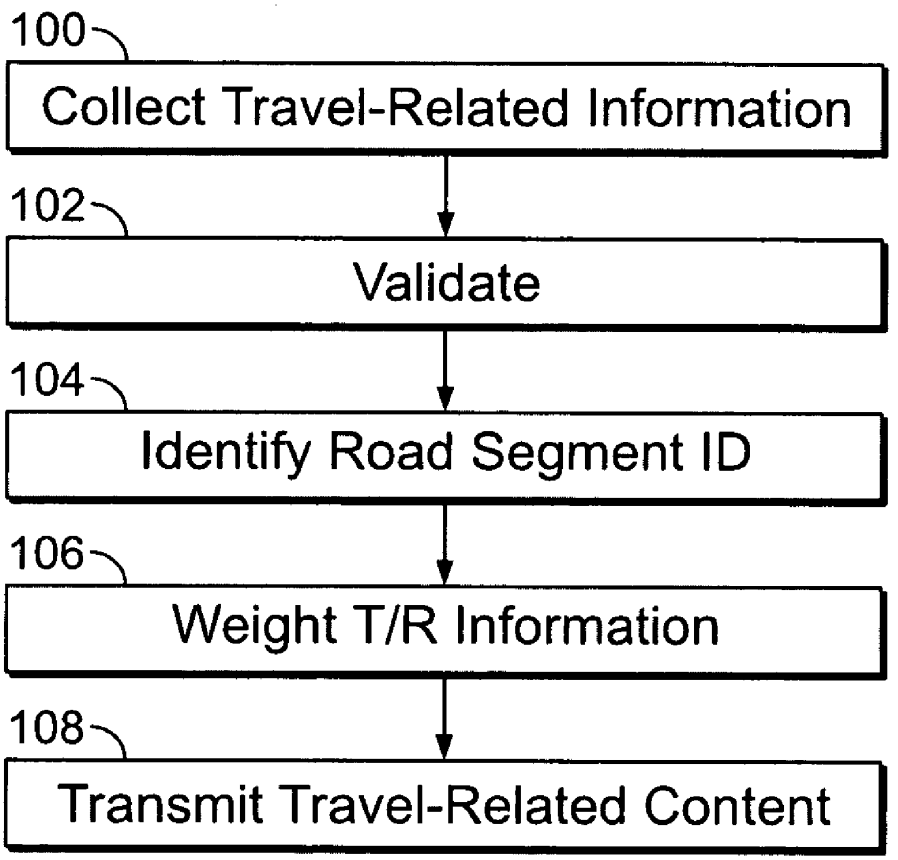
100
Collect Travel-Related Information
102
Validate
104
Identify Road Segment ID
106
Weight T/R Information
108
Transmit Travel-Related Content

FIG. 3

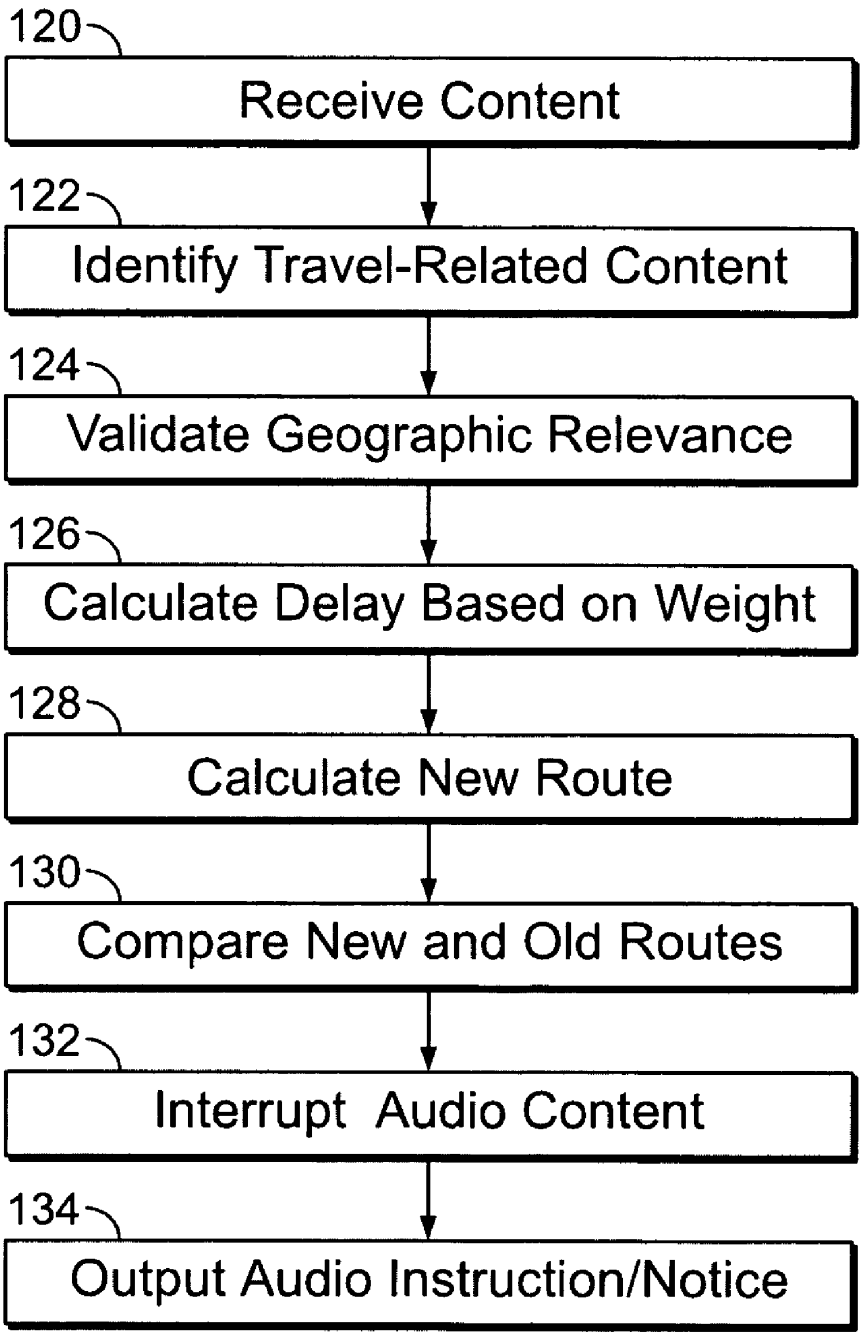
120
Receive Content
122
Identify Travel-Related Content
124
Validate Geographic Relevance
126
Calculate Delay Based on Weight
128
Calculate New Route
130
Compare New and Old Routes
132
Interrupt Audio Content
134
Output Audio Instruction/Notice

FIG. 4

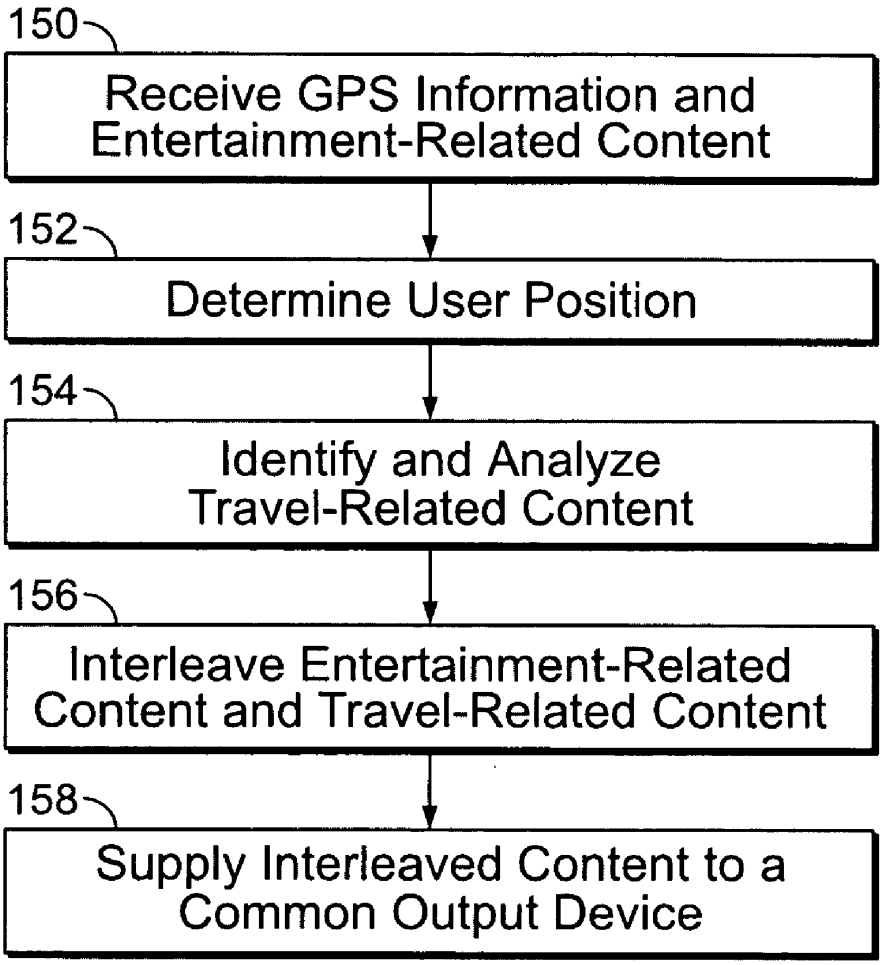
150
Receive GPS Information and Entertainment-Related Content
152
Determine User Position
154
Identify and Analyze Travel-Related Content
156
Interleave Entertainment-Related Content and Travel-Related Content
158
Supply Interleaved Content to a Common Output Device

FIG. 5

SYSTEM AND METHOD UTILIZING NON-GPS SATELLITE CONTENT IN REAL-TIME NAVIGATION

BACKGROUND OF THE INVENTION

The present invention relates to real-time navigation and more specifically to utilizing non-GPS information to update navigation information in real-time.

Navigation devices exist today that utilize GPS information to track the location of the navigation device and thus the device's user. Existing navigation devices typically store a cartographic map of data indicative of a roadway network for a geographic area and offer various applications and features to support the user's navigation through the geographic area. One exemplary application is to provide the user with audio instructions to direct the user between source and destination locations within the roadway network. Various routing parameters exist upon which the route through the roadway network may be based, such as time, distance and the like.

However, the data stored in the navigation device that is indicative of the roadway network is static in that the data is representative of the status of the roadway network only as of the last time that the navigation device was uploaded with a new cartographic map of the roadway network. The cartographic map reflects limited non-periodic or non-reoccurring information regarding the status of the roadway network. For example, while the cartographic map may store data identifying road segments that typically exhibit slow travel times (e.g. due to numerous traffic lights, rough road conditions and the like), the data is unable to identify for non-reoccurring, one time events that impact travel over the roadway network. Examples of non-reoccurring events are traffic accidents, icy road conditions, flooded roads, construction, weather conditions, temporary traffic back-ups and the like.

Heretofore, travelers generally obtained information regarding these non-reoccurring events through the automobile's FM/AM radio that played various types of content, such as entertainment-related content, traffic-related content and the like. To obtain travel-related content, drivers tuned to a weather channel or traffic channel to hear local travel conditions.

No system exists that is able to utilize real-time travel-related content to update navigation information and provide updated navigation information to the user.

A need remains for improved navigation devices, modular electronic devices and methods for use thereof that are better suited to inform users of real-time travel-related conditions and to utilize such real-time travel-related conditions to update navigation information.

BRIEF DESCRIPTION OF THE INVENTION

In one embodiment, a navigation device is provided that includes a GPS input that receives GPS information from a GPS satellite. The system also includes a non-GPS input that receives real-time content from a non-GPS source. The real-time content includes updates to travel conditions. The system also includes a navigation module that analyzes the updates from the non-GPS source in conjunction with the GPS information from the GPS satellite.

Optionally, the navigation module may track a location of the navigation device relative to a road segment based on the GPS information. The navigation module may then determine whether the updates concern the road segment. The system may further comprise memory storing a route between source and destination locations within a geographic area where the route comprises at least one road segment. The navigation module may then determine when the updates concern the road segment.

In one embodiment, a modular electronic device is provided that is configured to travel with a user during travel over a roadway network within a geographic area. The device includes a self-contained housing configured to be portable and at least one receiver that receives position information indicative of a position of the device and receives updates in travel conditions associated with the roadway network. The device also includes a control module provided in the housing and joined to the receiver. The control module analyzes the updates and travel conditions and generates travel-related content based on the updates. An output is provided in the housing that communicates with the control module and outputs the travel-related content to inform a user of a change in the travel conditions.

Optionally, the output may be a wireless transmitter held within the housing which transmits the travel-related content locally to a receiver. Alternatively, the output may be a FM transmitter held in the housing that broadcasts the travel-related content locally to an FM receiver, such as in a vehicle.

In an alternative embodiment, a method is provided for performing real-time updates to navigation information. The method includes receiving GPS information from a GPS satellite and receiving real-time content from a GPS source. The real-time content includes updates to travel conditions. The method further includes analyzing updates from the non-GPS source in conjunction with the GPS information from the GPS satellite.

Optionally, the method may include tracking a location of a navigation device relative to a road segment based on the GPS information and determining whether the updates concern the road segment. Optionally, the method may include calculating a route between source and destination locations within a geographic area and identifying changes in the navigation conditions of the route. Optionally, the method may include automatically interleaving entertainment related content and travel-related content based on the updates to the travel conditions and outputting the interleaved entertainment related content and travel-related content.

In accordance with an alternative embodiment, a method is provided for coordinating output of entertainment related content and travel-related content over a common audio output device. The method includes receiving GPS information from a GPS satellite and determining a user position based on the GPS information. The method further includes generating travel-related content based on the user position and receiving entertainment related content from a non-GPS source. The method also includes outputting the entertainment related content and travel-related content interleaved with one another over a common output device.

Optionally, the method may further include converting the entertainment related content to at least one of an audio and visual output that is output over the common output device. Optionally, the entertainment related content received from the non-GPS source may include updates to travel conditions and the method modifies the travel-related content based on the updates.

BRIEF DESCRIPTION OF THE DRAWINGS

FIG. **1** illustrates a navigation device formed in accordance with an embodiment of the present invention.

FIG. **2** illustrates a block diagram of an electronic device formed in accordance with an embodiment of the present invention.

FIG. **3** illustrates a flow chart setting forth the steps that may be implemented in accordance with one embodiment to generate travel-related content.

FIG. **4** illustrates a method carried out in accordance with at least one embodiment for providing real-time updates to navigation information.

FIG. **5** illustrates a method carried out in accordance with an embodiment of the present invention for coordinating the output of entertainment related content and travel-related content over a common output device.

DETAILED DESCRIPTION OF THE INVENTION

FIG. **1** generally illustrates a navigation device **10** formed in accordance with an embodiment of the present invention. The navigation device **10** includes a control module **12** interconnected with a series of peripherals including a CD/DVD player **14**, an MP3 player **16**, headphones **18**, speakers **20**, a wireless transmitter **22** and an auxiliary input **24**. The control module **12** also is connected to a GPS receiver **26**, such as a GPS antenna, and to a non-GPS input or non-GPS receiver **28**. The GPS receiver **26** receives GPS information from satellites within the global positioning system. The non-GPS receiver **28** receives real-time content **30** from a transmitter **32** which is in turn driven by a transmission station **34**. The transmission station **34** represents a non-GPS source such as an FM transmitter, an AM transmitter, a cellular phone transmitter, a non-GPS satellite and the like. Examples of non-GPS satellites include satellites utilized in connection with military applications, satellites that transmit radio content (such as XM radio), satellites that transmit weather information and the like.

Optionally, the non-GPS receiver **28** may also include a transmitter (thereby forming a transceiver) able to transmit return content **36** such as user status, position information, inquiries, emergency requests, communication signals (e.g., telephone and/or data signals) and the like.

The real-time content **30** received by the receiver **28** may include a variety of content, such as entertainment related content (e.g., music, sporting events, public radio, news, syndicated programs, and the like) and travel-related content (e.g., travel conditions representative of a present or real-time status of a particular road segment within a roadway network of a geographic area). The travel-related content may relate to one or more of the weather, construction, automotive accidents and/or traffic backups due to rush hour and the like. The transmission station **34** combines the entertainment related content in a predefined format to produce the real-time content **30**. The travel conditions are continuously updated as new information is received and validated, whereupon updates in the travel conditions are interspersed by the transmission station **34** within the real-time content **30**. For example, the travel-related content may be broadcast over a dedicated and preassigned transmission station or channel. Alternatively, the travel-related content may be interspersed within other broadcast channels that also convey entertainment related content.

The control module **12** may offer various navigation functions and features. Similar to the navigation functions and features discussed below in connection with the electronic device **40** of FIG. **2**. In addition, the control module **12** identifies, within the real-time content **30**, updates to travel conditions and analyzes such updates in conjunction with the GPS information received from the GPS receiver **26**. For example, the control module **12** may track a location of the navigation device **10** relative to a roadway segment within a roadway network of a geographic area. The control module **12** tracks the location of the navigation device **10** based on the GPS information and determines whether updates, received within the real-time content **30**, concern the particular road segment along which the navigation device **10** is traveling.

The control module **12** may output the travel-related content over the speaker **20** and/or headphones **18**, such as through an audio message. Alternatively, the control module **12** may instruct the transmitter **22** to transmit the travel-related content locally over a predefined channel within an operating range of a local receiver. For example, the transmitter **22** may constitute an FM or AM transmitter that transmits real-time travel-related content locally to an FM or AM radio, when the navigation device and FM radio are in close proximity to each other (e.g. less than 100 feet, and preferably less than 25 feet).

The control module **12** may receive audio information from one or more of the auxiliary input **24**, the CD/DVD unit **14** and the MP3 player **16**. The control module **12** playsback the audio information over the speaker **20** or headphones **18** or transmits the audio information from transmitter **22** to the local receiver. When playing back the audio information, the control module **12** intersperses, within the audio signals, navigation and/or travel-related content. By way of example only, the navigation device **10** may playback audio entertainment information to the driver of a vehicle. When the vehicle approaches an intersection at which the navigation device **10** instructs the driver to turn, the control module **12** interrupts the audio entertainment information and delivers a corresponding audio instruction containing navigation or travel-related content (e.g., "turn right", "turn left", "accident ahead two miles", "thunderstorms reported over Kansas City ahead ten miles" and the like.).

The control module **12** also performs "circumstance routing" which is explained below in more detail in connection with the embodiment of FIG. **2**.

FIG. **2** illustrates an electronic device **40** that is modular and configured to be carried with a user during travel over a roadway network within a geographic area. For example, the user may place the electronic device **40** on the dash of an automobile when driving, a boat, an airplane or in a backpack when camping, biking or hiking. The electronic device **40** includes a housing **42** that contains all of the remaining structure of the electronic device **40**. The electronic device **40** includes a processor **44** that communicates with a satellite content processor **46** over data lines **48** and **50**. The processor **44** communicates with a GPS receiver **52** through signal conditioning circuitry **54** to receive GPS information. Memory **56** in the housing **42** stores, among other things, cartographic map data associated with one or more geographic areas including data indicative of a roadway network comprised of road segments intersecting with one another at nodes within the geographic areas. The processor **44** accesses the cartographic map data in memory **56** in connection with navigation and routing functions. A CODEC **58** is provided within the housing **42** and is interconnected with the processor **44** by data lines **60** and an interrupt line **62**. The CODEC **58** converts digital audio signals, received over data lines **60** from the processor **44** into analog signals that drive speaker **64** thereby playing audio information to the user. In addition, the CODEC **58** is attached to headphones **66** which may also be driven by the CODEC to play the audio information.

Optionally, the CODEC **58** maybe connected to a transmitter **68** which modulates the audio information for transmission to a an audio receiver and playback unit **70** (such as an FM receiver within a radio in an automobile). The audio receiver and playback unit **70** is separate and distinct from, and outside of, the housing **42**, but in close proximity thereto

(e.g., less than 100 feet and preferably less than 25 feet). By way of example, the electronic device **40** and the audio receiver and playback unit **70** may both be located within an automobile, boat, airplane, backpack and/or held by a user.

The satellite content processor **46** is interconnected with a receiver **72** which receives real-time content from a non-GPS satellite. For example, the satellite may constitute a military satellite, a weather satellite or a radio transmission satellite (such as XM radio). The real-time content received by receiver **72** includes entertainment-related content and traffic-related content, among other things. The satellite content processor **46** analyzes the incoming satellite content to identify and separate travel-related content from entertainment-related content. The satellite content processor **46** then conveys separately over data lines **48** and **50**, the entertainment content and the travel-related content, respectively. Signal conditioning circuits **74** and **76** process the travel-related content and entertainment-related content, respectively, before passage to the processor **44**. The entertainment-related content is also passed along bypass **78** directly to the CODEC **58** for conversion to analog signals and play or transmission.

The processor **44** carries out numerous navigation functions and offers a variety of navigation and routing features. By way of example, the processor **44** may perform point-to-point routing, in which a user first identifies source and destination locations within the roadway network. The processor **44** then calculates a suggested route between the source and destination points based upon parameters defined by the user, such as shortest distance, shortest time or the like. Once the processor **44** determines the initial suggested route between the source and destination points, the processor **44** then monitors the progress of the electronic device **40** along the route between such points. Optionally, the processor **44** may present the routing information on a display **80** and/or provide audio instructions over speaker **64** or headphones **66** to the user. The audio instructions may by way of example include turn information (e.g. "turn right in 100 yards at the next light", "take exit **52** coming up in one mile" and the like).

In addition, the processor **44** performs "circumstance routing" in which the initial suggested route, having already been defined, is changed by the processor **44** based upon traffic-related content received over data line **48**. For example, the satellite content received at receiver **72** may include traffic-related content indicating that an accident has occurred along the roadway segment upon which the user is traveling. The traffic-related content may further indicate an amount of delay associated with the accident. The accident information and delay are passed within the traffic-related content over data line **48** and the processor **44** uses such traffic-related content to access whether the initial suggested route remains the best (e.g. fastest or shortest) route to the destination based on the users selected parameters.

The traffic-related content represents real-time information relative to navigation in that the traffic-related content includes non-reoccurring information that will impact the user's travel. Real-time is not limited to "live" information, but instead is intended to broadly refer to any information regarding facts and circumstances that are not reflected in the data of the cartographic map. The facts and circumstances may have arose after the cartographic map was loaded into the electronic device **40**, but need not necessarily.

In the event that the processor **44** determines that the initial suggested route is no longer the best route, the processor **44** recalculates the route. The processor **44** informs the user of the traffic-related content (e.g. "an accident has occurred and a delay of x minutes resulted"). The processor **44** may also instruct the user that a new route has been calculated and subsequently provide a user with directions along the new route through display **80**, speaker **64** and/or headphone **66**.

The CODEC **58** receives digital audio information over bypass **78** representing the entertainment-related content separated by the satellite content processor **46**. The CODEC **58** converts the entertainment-related content (originally in a digital format) from bypass **78** to a format compatible with one or more of the speaker **64**, headphone **66** and transmitter **68**. The processor **44** also utilizes the interrupt **62** to control operation of the CODEC **58**. For example, the interrupt **62** is turned on by the processor **44** when the processor **44** desires to output digital audio information related to navigation, routing or traffic-related content over data line **60** to the CODEC **58**. When the CODEC **58** detects an interrupt at interrupt line **62**, the CODEC **58** suspends play of the entertainment-related content from bypass **78** and outputs the navigation, routing or traffic-related content received over data line **60**. When the complete digital audio information is passed over data line **60**, the processor **44** turns off the interrupt **62** and the CODEC **58** again processes and outputs the entertainment-related content from bypass **78**.

Optionally, the CODEC **58** may fading in and fade out the entertainment content from the bypass **78** to provide a smooth transition within the audio information presented to the user. Optionally, the CODEC **58** may mix the entertainment information and the navigation, routing or travel-related content. For example, the CODEC **58** may reduce the volume of the entertainment-related content to a very background level while playing more loudly the navigation, routing, or travel-related content.

In the embodiments illustrated in FIGS. **1** and **2**, speakers **20**, **64** and/or headphones **18**, **66** are directly connected to and powered by the navigation device **10** and electronic device **40** such that the power sources of each directly drive the speakers **20**, **64** or headphones **18**, **66**. It is understood that the speakers **20**, **64** and headphones **18**, **66** may be removed entirely and the navigation device **10** and electronic device **40** rely entirely for audio output upon the speaker system built within the automobile or a separate playback unit. In this regard, transmitters **22** and **68** may be configured to transmit over a predetermined FM or AM channel with sufficient power to be received by the FM/AM antenna of the automobile or playback unit. The radio within the automobile or playback unit is then turned to the designated channel and the output information from the navigation device **10** and electronic device **40** are provided over the speakers within the automobile or playback unit. The user is able to leave the radio tuned to the predetermined channel at all times and rely entirely on the navigation device **10** or electronic device **40** to provide all entertainment-related content, as well as navigation, routing and travel-related content. The user is able to select particular entertainment-related content (e.g. channels and the like through the user interface **38** in navigation device **10** and through the interface **82** in the electronic device **40**).

Optionally, a single antenna system may be utilized combining the functionality of the receiver **72** and GPS receiver **52** into a common smart antenna. The common antenna would have the ability to receive non-GPS satellite information, such as from subscription data services (e.g. XM radio and the like). The smart antenna would further be able to receive GPS information, as well as other non-satellite based transmissions such as AM, FM and other RF based transmissions. The received information may be coded in a variety of formats including frequency division multiple access (FDMA), code division multiple access (CDMA), blue tooth enabled, Wi-Fi enabled and the like. The smart antenna may encompass a processor to perform initial processing and

separation of incoming transmissions and output one or more streams of data, entertainment-related content, position information, weather and traffic-related content.

FIG. **3** illustrates an exemplary flow chart of the process carried out by a remote transmission service, such as a subscription data service. The process set forth in FIG. **3** may be carried out at the transmission station **34** illustrated in FIG. **1** or remote therefrom. In the example of FIG. **1**, the transmission station **34** directly communicates via transmitter **32** to the receiver **28** of the navigation device **10**. It is understood that the transmission station **34** is intended to very broadly represent stations that may be land based, aircraft based, ship based, satellite based and the like. For example, the transmission station **34** may represent a low earth, medium earth or high earth orbit satellite that communicates via transmitter **32** through line of site communications with receiver **28**. Alternatively, the transmission station **34** may represent a relay tower located in a metropolitan area or in a rural area to relay various types of content.

Returning to FIG. **3**, at the transmission station **34** or upstream thereof, travel-related information is collected (step **100**) from a variety of sources throughout a geographic area. The travel-related information is then validated, such as by a secondary source of similar information and/or by confirming that the travel-related information relates to a valid road segment within a roadway network within a corresponding geographic area. Once the traffic-related information is validated (step **102**) the road segment is uniquely identified (step **104**) within the roadway network such as based on the newest modes of the road segment on either side of the location associated with the travel-related information. Each road segment has unique identification data stored within the cartographic maps in the memory within control module **12** in FIG. **1** and memory **56** within electronic device **40** in FIG. **2**. Once a road segment ID is determined, the traffic-related information is assigned a weight (step **106**) based upon parameters utilized for navigation and routing within the cartographic map. The weight may constitute a number along a normalized scale, a number of minutes, a general ranking and the like. Once the traffic-related information is assigned a weight at step **106**, the weight, road segment ID and traffic-related information are combined and formatted as traffic-related content which is transmitted at step **108** from the transmitter **32** (FIG. **1**). Optionally, the traffic-related content may be transmitted over a dedicated channel or station. Alternatively, the traffic-related content may be embedded within entertainment content transmitted over one or more non-dedicated stations or channels.

FIG. **4** illustrates a processing sequence carried out by the navigation device **10** and/or the electronic device **40** in connection with circumstance routing. At step **120**, the receiver **28**, **72** receives real-time content from a remote transmitter. Within the content, travel-related content is identified at step **122**. In the electronic device **40**, the satellite content processor **40** performs the identification at step **122**. Next, at step **124**, the traffic-related content is analyzed to determine the road segment to which the traffic-related content pertains and it is determined whether the traffic-related content has geographic relevance. Geographic relevance exists when the road segment ID within the traffic-related content corresponds to a road segment along which the user is presently traveling. Alternatively, or in addition, geographic relevance may exist when the traffic-related content relates to a road segment within a suggested route along which the navigation device **10** or electronic device **40** is presently directing the user. For example, if a suggested route includes a road segment along which a traffic accident has occurred and the travel-related content identifies the traffic accident, then geographic relevance would exist.

When the traffic-related content is relevant to a road segment along which the user is presently traveling or expected to travel in the near future, control passes to step **126** at which a delay is calculated based on the weight assigned to the traffic-related content. At step **128**, a new route is calculated from the user's present position to the destination where the new route utilizes the updated weight information associated with the identified road segment. At step **130**, the new and old routes are compared to determine which is preferable based on the user selected parameters (e.g. faster, shorter, etc.).

At step **132**, the audio content being played back to the user (e.g. the entertainment-related content played over the radio) is interrupted and an initial suggested traffic-related message is presented to the user. When a new route is determined to be better than the initial suggested route, the traffic message may inform the user that a new route is preferable in view of the traffic-related content. At step **134**, the navigation, routing and/or traffic-related content is output audibly to the user.

FIG. **5** illustrates an alternative embodiment in which the electronic device **40** performs circumstance routing without an initial suggested route between source and destination locations. In the example of FIG. **5**, the electronic device **40** receives GPS information and entertainment content at step **150**. At step **152**, the user position is determined. At step **154**, the travel-related content is identified and analyzed for relevance to a road segment associated with the user's present position. The road segment may be the road segment upon which the user is presently traveling. Alternatively, the road segment may be ahead of, or in close proximity to, the road segment upon which the user is presently traveling. At step **156**, the entertainment content and the travel-related content are combined and, at step **158**, both are supplied to a common output device. The output device may constitute an audio receiver and playback unit **70** (FIG. **2**), the radio within a car, a portable "boom box", a handheld FM/AM radio a home stereo and the like. The common output device may simply constitute a speaker within the electronic device **40** configured as a stand alone unit.

Returning to step **156**, when the entertainment related content and travel-related content are interleaved, both may, but need not, be played back at the same time. Instead, the entertainment related content may be played back until travel-related content is identified to be relevant to the user. When travel-related content is identified to be relevant to the user, the entertainment related content is suspended, faded out or reduced in volume while the travel-related content is played.

In one exemplary embodiment, a commute watch feature may be offered in which the user preprograms a day to day commute between home and work. Each morning and evening the user selects the commute watch feature. Upon start-up, the navigation system **10** or electronic device **40**, initially determines whether the normal commuting route is experiencing delays sufficient to warrant taking an alternative path. The user may be informed of an overall length for the commute and/or the amount of delay in excess of the normal commute time. The user may also be informed of the location of the delay, the cause of the delay and the estimated time before traffic returns to normal. In the event that multiple routes exist between home and work (e.g., two interstates, three main highways, etc.), the user may be informed at startup of the best/fastest route. The navigation device **10** and the electronic device **40** track the users progress between work and home and vise versa. In the event that travel-related content is detected that is relevant to a road segment along the

commuting route, the user is notified visibly and/or audibly. Optionally, an alternative route may also be calculated and provided to the user.

As explained above, the travel-related content includes weather information. Weather stations collect local data and provide such data to subscription data services (such as XM radio). The subscription service confirms the location of the weather and generates travel-related content identifying road segments and/or a general geographic area impacted by the adverse weather. The severity of the weather is also utilized to assign a weight or provide a severity rating to the weather information within the travel-related content. When the navigation device **10** or electronic device **40** receives the travel-related content, the weighting or cost associated with each road segment than the effected geographic area is increased accordingly.

Optionally, the navigation device **10** or electronic device **40** may utilize the antenna already provided within the automobile and replace of receivers **28** and **72** and/or GPS receivers **26** and **52** (for GPS enabled automobiles). As a further option, the navigation device **10** and electronic device **40** may be interconnected with the CAN bus within an automobile to obtain information related to the operation and performance of the automobile and to output audio signals to the speaker system within the automobile or directly communicate with the audio receiver and playback unit **70** (radio) within the automobile.

While the invention has been described in terms of various specific embodiments, those skilled in the art will recognize that the invention can be practiced with modification within the spirit and scope of the claims.

What is claimed is:

1. A method for coordinating output of entertainment-related content and travel-related content over a common output device, comprising:

receiving GPS information from a GPS satellite;

determining a user position based on said GPS information;

generating travel-related content based on said user position;

receiving entertainment-related content from a non-GPS source; and

wirelessly transmitting via radio-frequency signals said entertainment-related content and travel-related content interleaved with one another to an audio playback unit.

2. The method of claim **1**, further comprising converting said entertainment-related content to at least one of an audio and visual output that is output to said audio playback unit.

3. The method of claim **1**, wherein said entertainment-related content received from the non-GPS source includes updates to travel conditions, said generating modifies said travel-related content based on said updates.

4. The method of claim **1**, wherein said entertainment-related content includes updates to travel conditions, said method further comprising analyzing said updates from said non-GPS source in conjunction with said GPS information to obtain modifications to said travel-related content.

5. The method of claim **1**, wherein said wirelessly transmitting includes using one of a FM transmitter, an AM transmitter, and a wireless transmitter.

6. A portable navigation device comprising:

a satellite navigation receiver operable to receive satellite navigation signals and determine a current geographic location of the device using the received satellite navigation signals;

a satellite content receiver operable to receive entertainment-related content from one or more satellites;

a processor coupled with the satellite navigation receiver and operable to generate travel-related content based on the current geographic location of the device and interleave the generated travel-related content with the received entertainment-related content to generate an audio signal; and

a radio-frequency transmitter coupled with the processor and operable to wirelessly transmit a radio-frequency signal corresponding to the generated audio signal for use by an audio playback unit.

7. The navigation device of claim **6**, wherein the satellite navigation receiver is a Global Position System (GPS) receiver.

8. The navigation device of claim **6**, wherein the satellite content receiver is a satellite radio receiver operable to receive satellite radio signals.

9. The navigation device of claim **6**, wherein the satellite content receiver is further operable to receive traffic-related content and the processor is operable to interleave the traffic-related content, the entertainment-related content, and the audio instruction to generate the audio signal.

10. The navigation device of claim **6**, wherein the radio-frequency transmitter is one of a FM transmitter, an AM transmitter, and a wireless transmitter.

11. The navigation device of claim **6**, wherein the audio playback unit is an in-dash radio system disposed within an automobile.

12. The navigation device of claim **6**, wherein the travel-related content and the entertainment-related content are interleaved such that the travel-related content has a greater volume than the entertainment-related content when the audio signal is used by the audio playback unit.

13. The navigation device of claim **6**, wherein the entertainment-related content includes music.

14. The navigation device of claim **6**, further including a speaker for producing an audible representation of the generated audio signal.

* * * * *