US007068647B2

(12) **United States Patent**
Fangman et al.

(10) **Patent No.: US 7,068,647 B2**
(45) **Date of Patent: *Jun. 27, 2006**

(54) **SYSTEM AND METHOD FOR ROUTING IP PACKETS**

(75) Inventors: **Richard E. Fangman**, Pflugerville, TX (US); **Jason D. Preston**, Austin, TX (US)

(73) Assignee: **Voxpath Networks, Inc.**, Austin, TX (US)

(*) Notice: Subject to any disclaimer, the term of this patent is extended or adjusted under 35 U.S.C. 154(b) by 868 days.

This patent is subject to a terminal disclaimer.

(21) Appl. No.: **09/903,836**

(22) Filed: **Jul. 11, 2001**

(65) **Prior Publication Data**

US 2002/0141389 A1 Oct. 3, 2002

Related U.S. Application Data

(60) Provisional application No. 60/281,908, filed on Apr. 3, 2001.

(51) **Int. Cl.**
H04L 12/66 (2006.01)

(52) **U.S. Cl.** **370/352**; 370/389; 370/465; 370/401

(58) **Field of Classification Search** 370/352, 370/353, 354, 355, 401, 466, 475, 389
See application file for complete search history.

(56) **References Cited**

U.S. PATENT DOCUMENTS

5,790,548 A * 8/1998 Sistanizadeh et al. 370/401
6,061,349 A * 5/2000 Coile et al. 370/389
6,073,178 A * 6/2000 Wong et al. 709/229
6,178,455 B1 * 1/2001 Schutte et al. 709/228
6,286,038 B1 * 9/2001 Reichmeyer et al. 709/220
6,353,660 B1 * 3/2002 Burger et al. 379/88.17
6,381,638 B1 * 4/2002 Mahler et al. 709/220
6,385,653 B1 * 5/2002 Sitaraman et al. 709/230
6,496,867 B1 * 12/2002 Beser et al. 709/245
6,515,997 B1 2/2003 Feltner et al.
6,523,068 B1 * 2/2003 Beser et al. 709/238
6,577,642 B1 * 6/2003 Fijolek et al. 370/465

(Continued)

OTHER PUBLICATIONS

Written Opinion, Application No. PCT/US02/10544, mailed Feb. 26, 2004.

(Continued)

Primary Examiner—Ajit Patel
Assistant Examiner—Andrew C. Lee
(74) *Attorney, Agent, or Firm*—Meyertons Hood Kivlin Kowert & Goetzel, P.C.; Jeffrey C. Hood; Mark S. Williams

(57) **ABSTRACT**

System and method for routing packets for IP telephony. The system includes an IP telephone (IPT) and a Service Gateway (SG) coupled via a network. The SG receives a data packet from the IPT, including a private source IP address (SIPA), source port number (SPN), and destination information for an IP device, performs network address persistent port translation (NAPPT) on the data packet, and sends it to the IP device. NAPPT changes the private SIA to a public SIA, leaving the SPN unchanged. The SG receives a data packet from the IP device, including a public destination IP address (DIPA, i.e., said public SIPA), a destination port number (DPN, i.e., said SPN), and source information, NAPPTs the data packet, using the public DIPA and the DPN to identify the IPT, changing the public DIPA to the private SIPA, leaving the DPN unchanged, and sends the data packet to the IPT.

43 Claims, 22 Drawing Sheets

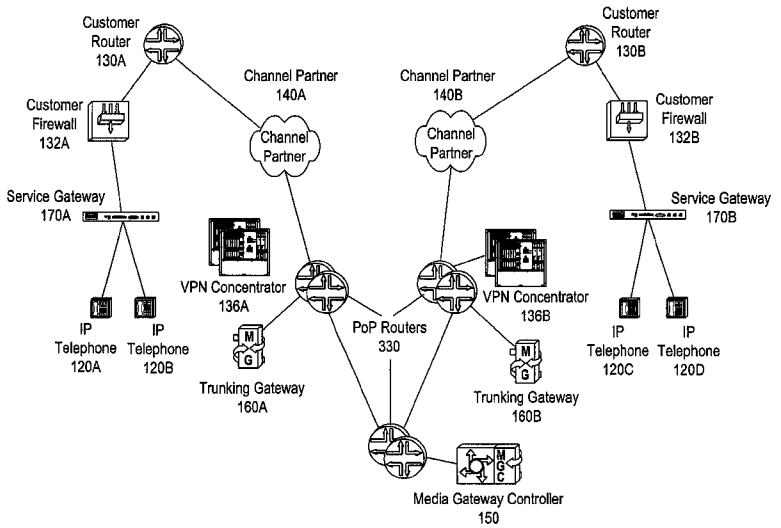

U.S. PATENT DOCUMENTS

6,629,137	B1 *	9/2003	Wynn	709/223
6,657,991	B1 *	12/2003	Akgun et al.	370/352
6,693,878	B1 *	2/2004	Daruwalla et al.	370/235
6,697,862	B1 *	2/2004	Beser et al.	709/226
6,822,955	B1 *	11/2004	Brothers et al.	370/389
6,822,957	B1 *	11/2004	Schuster et al.	370/389
6,829,250	B1 *	12/2004	Voit et al.	370/467

OTHER PUBLICATIONS

A Radvision Technology White Paper "Traversal of IP Voice and Video Data through Firewalls and NATs", 2001, 18 pages.
dynamicsoft SIP Firewall Control Proxy, 2001, 4 pages.
dynamicsoft SIP Edge Proxy, 2001, 2 pages.

* cited by examiner

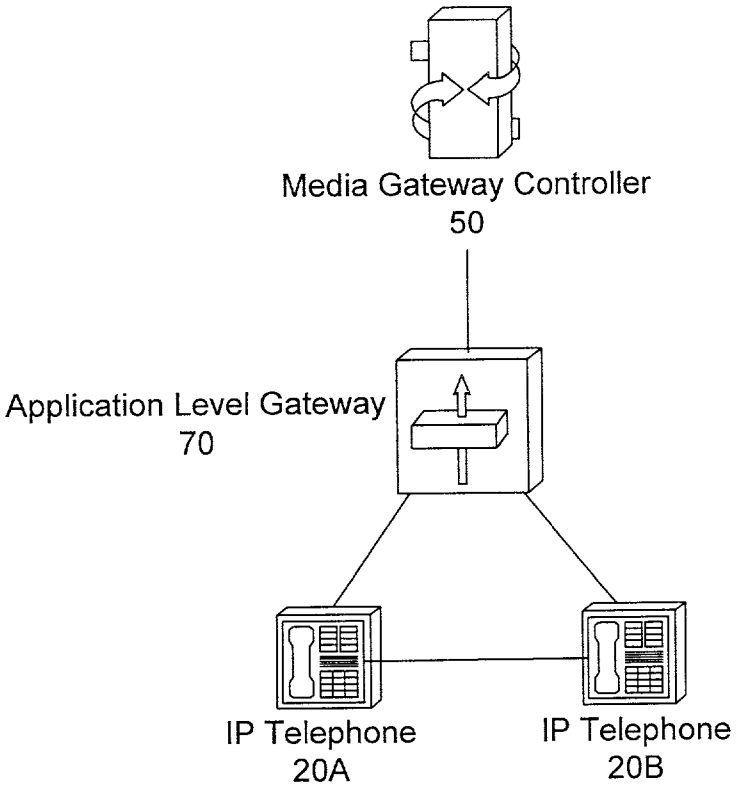

Figure 1
(Prior Art)

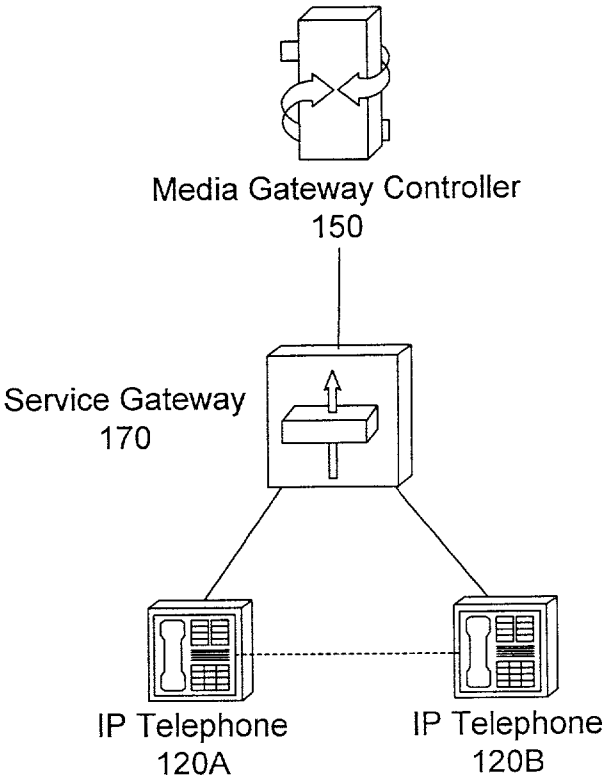

Figure 2

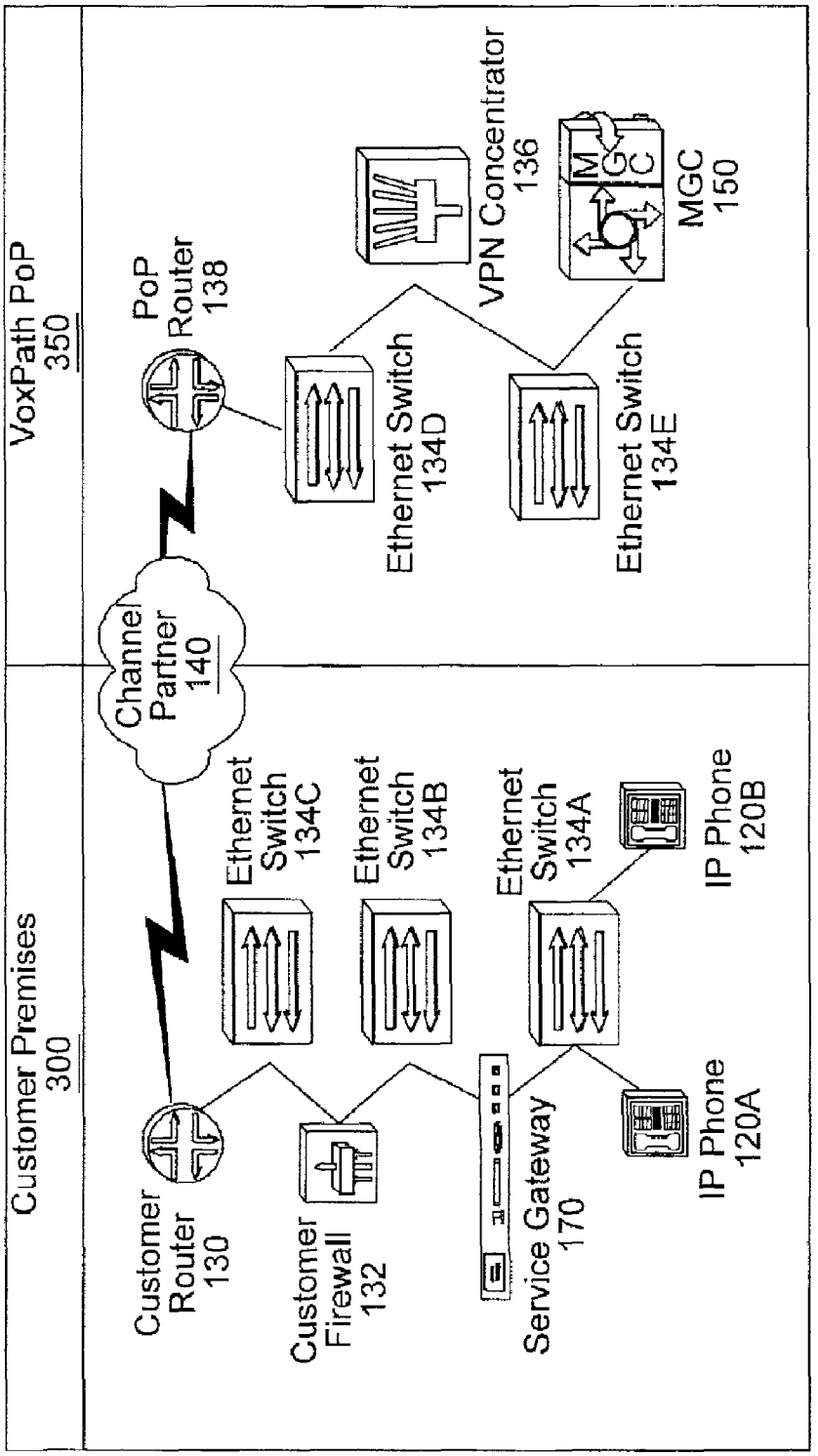
VoxPath PoP
350
Customer Premises
300
PoP Router
138
Channel Partner
140
Ethernet Switch
134D
VPN Concentrator
136
Ethernet Switch
134E
MGC
150
Ethernet Switch
134C
Ethernet Switch
134B
Ethernet Switch
134A
IP Phone
120B
Customer Router
130
Customer Firewall
132
Service Gateway
170
IP Phone
120A

Figure 3A

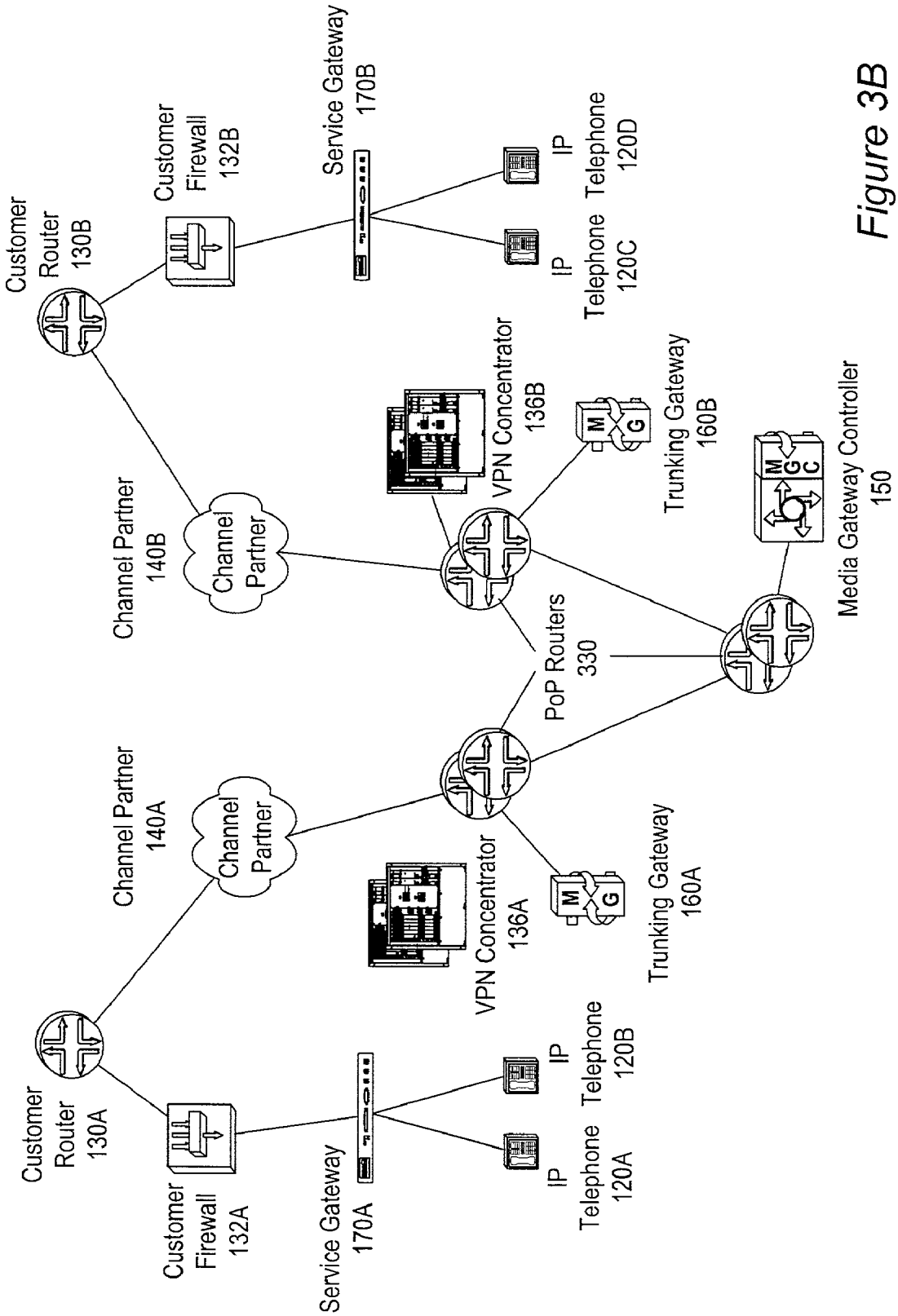
Customer Router 130B
Customer Firewall 132B
Service Gateway 170B
IP Telephone 120D
IP Telephone 120C
Channel Partner 140B
Channel Partner
VPN Concentrator 136B
Trunking Gateway 160B
Media Gateway Controller 150
PoP Routers 330
Channel Partner 140A
Channel Partner
VPN Concentrator 136A
Trunking Gateway 160A
Customer Router 130A
Customer Firewall 132A
Service Gateway 170A
IP Telephone 120B
IP Telephone 120A

Figure 3B

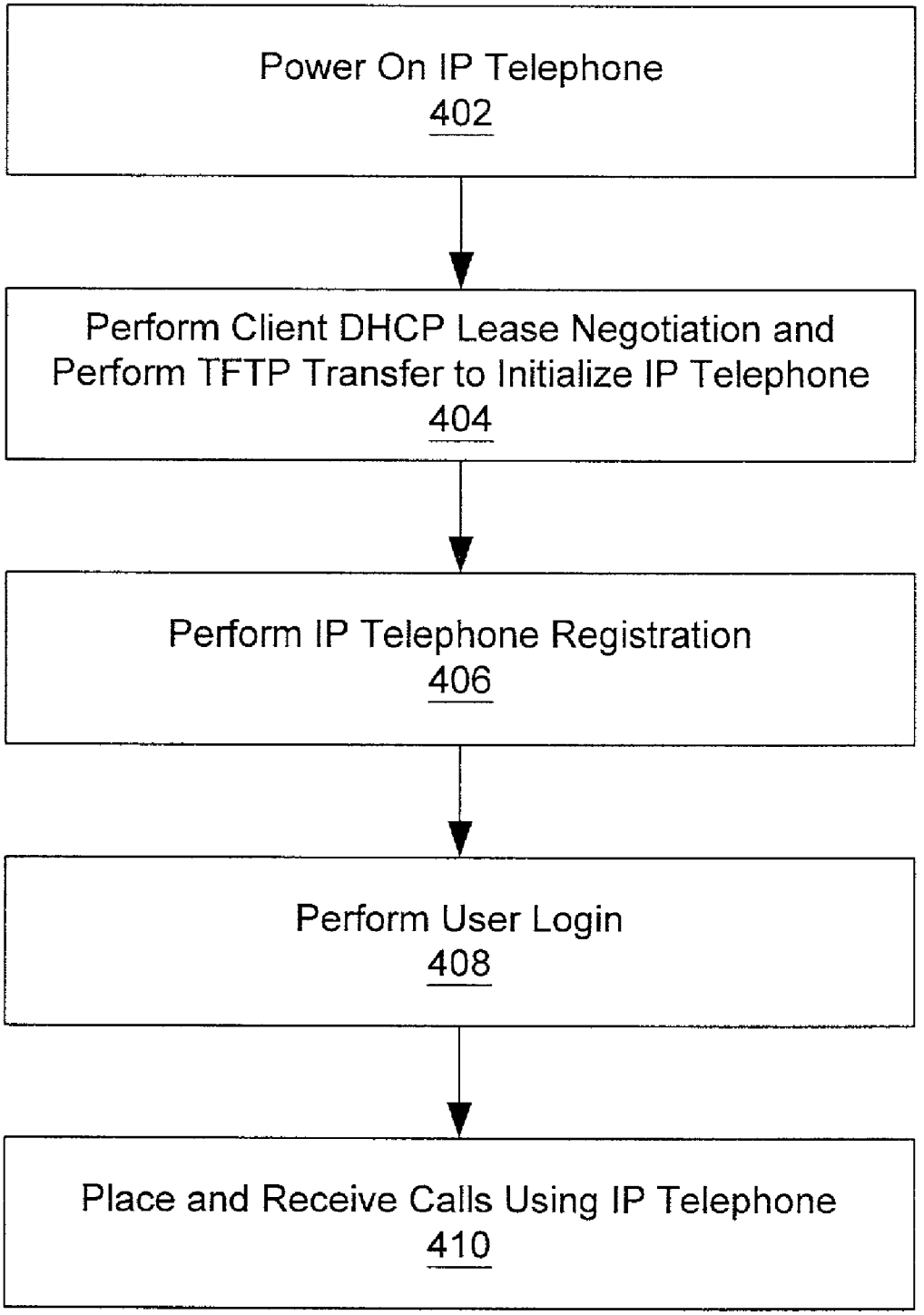
Power On IP Telephone
402
Perform Client DHCP Lease Negotiation and Perform TFTP Transfer to Initialize IP Telephone
404
Perform IP Telephone Registration
406
Perform User Login
408
Place and Receive Calls Using IP Telephone
410

Figure 4A

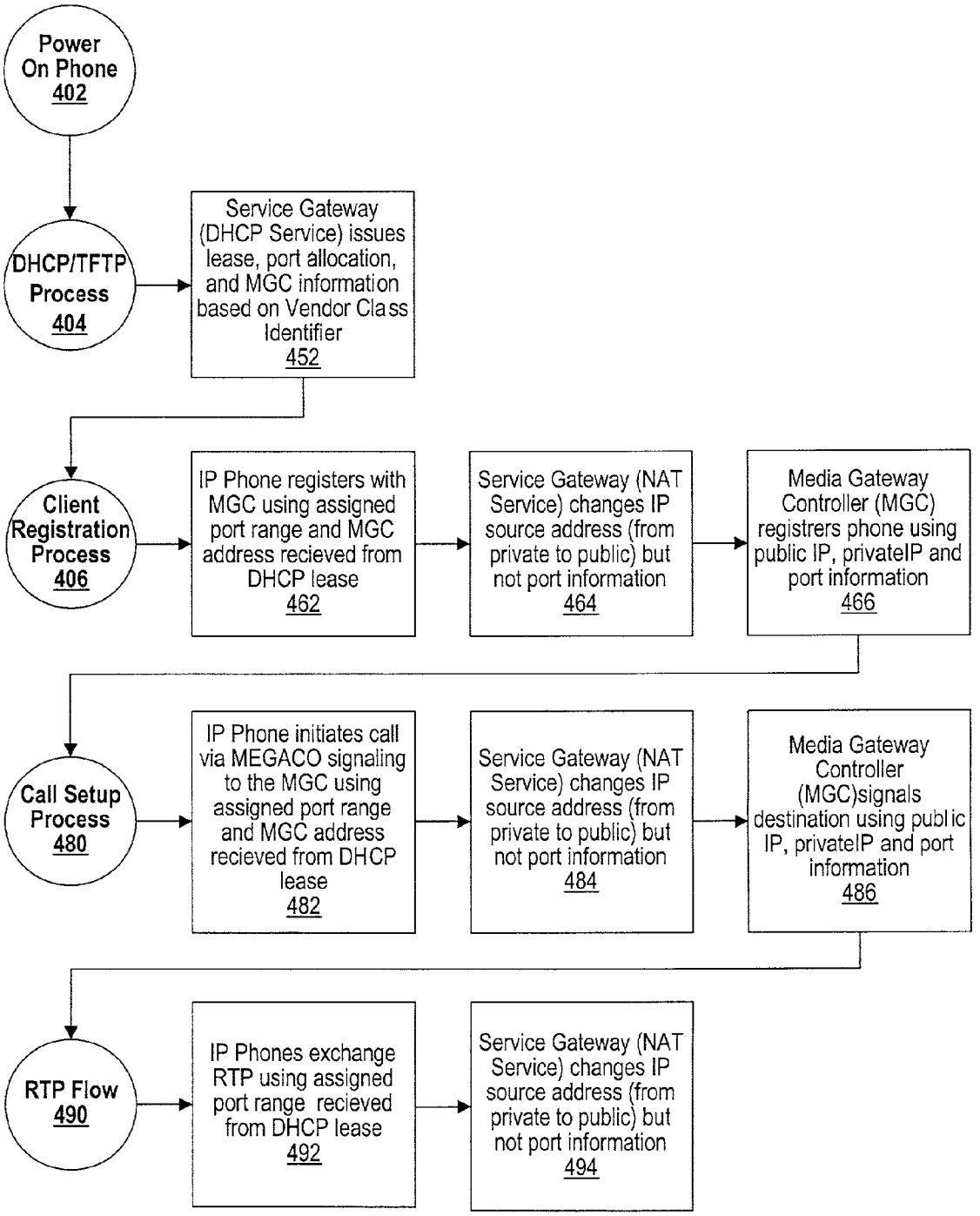
Power On Phone 402
DHCP/TFTP Process 404
Service Gateway (DHCP Service) issues lease, port allocation, and MGC information based on Vendor Class Identifier 452
Client Registration Process 406
IP Phone registers with MGC using assigned port range and MGC address recieved from DHCP lease 462
Service Gateway (NAT Service) changes IP source address (from private to public) but not port information 464
Media Gateway Controller (MGC) registrers phone using public IP, privateIP and port information 466
Call Setup Process 480
IP Phone initiates call via MEGACO signaling to the MGC using assigned port range and MGC address recieved from DHCP lease 482
Service Gateway (NAT Service) changes IP source address (from private to public) but not port information 484
Media Gateway Controller (MGC)signals destination using public IP, privateIP and port information 486
RTP Flow 490
IP Phones exchange RTP using assigned port range recieved from DHCP lease 492
Service Gateway (NAT Service) changes IP source address (from private to public) but not port information 494

Figure 4B

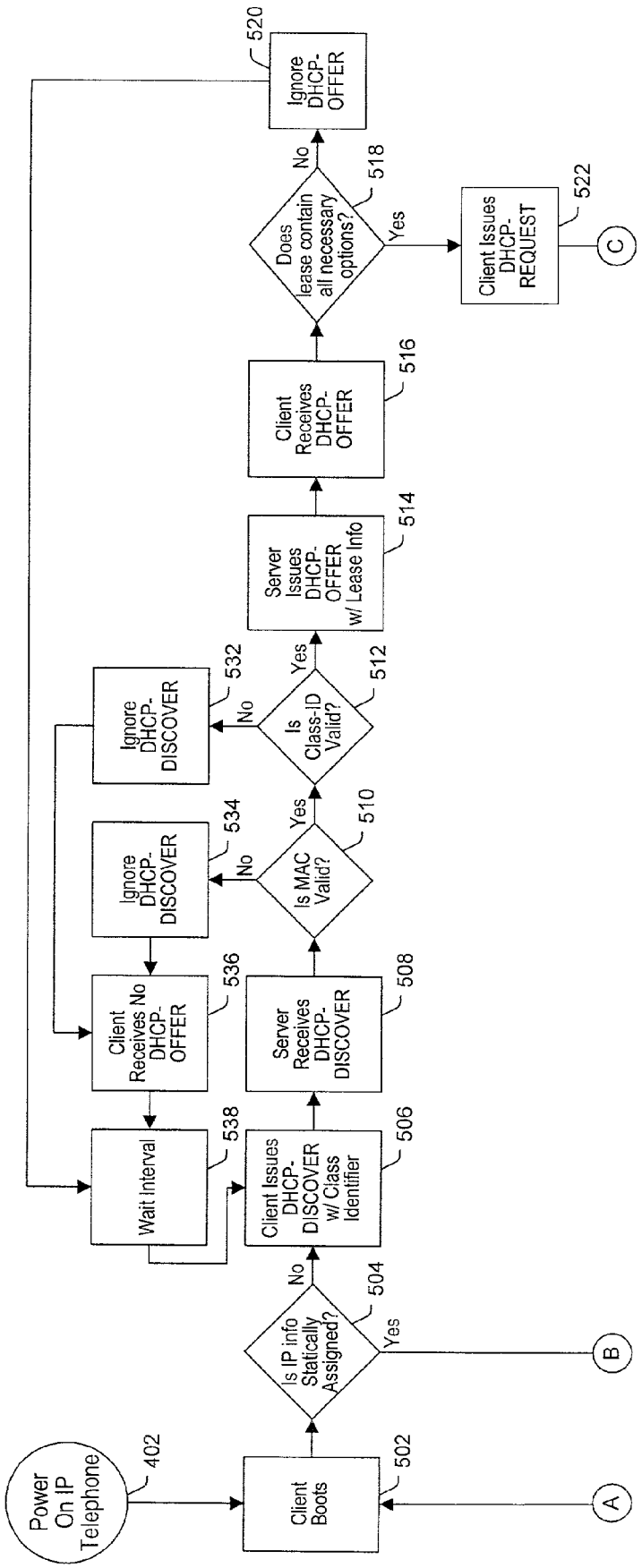
CLIENT DHCP LEASE NEGOTIATIONS
404
Power On IP Telephone
402
Client Boots
502
A
Is IP info Statically Assigned?
504
No
Yes
B
Client Issues DHCP-DISCOVER w/ Class Identifier
506
Server Receives DHCP-DISCOVER
508
Is MAC Valid?
510
Yes
No
Is Class-ID Valid?
512
Yes
No
Server Issues DHCP-OFFER w/ Lease Info
514
Client Receives DHCP-OFFER
516
Does lease contain all necessary options?
518
No
Yes
Ignore DHCP-OFFER
520
Client Issues DHCP-REQUEST
522
C
Ignore DHCP-DISCOVER
532
Ignore DHCP-DISCOVER
534
Client Receives No DHCP-OFFER
536
Wait Interval
538

Figure 5A

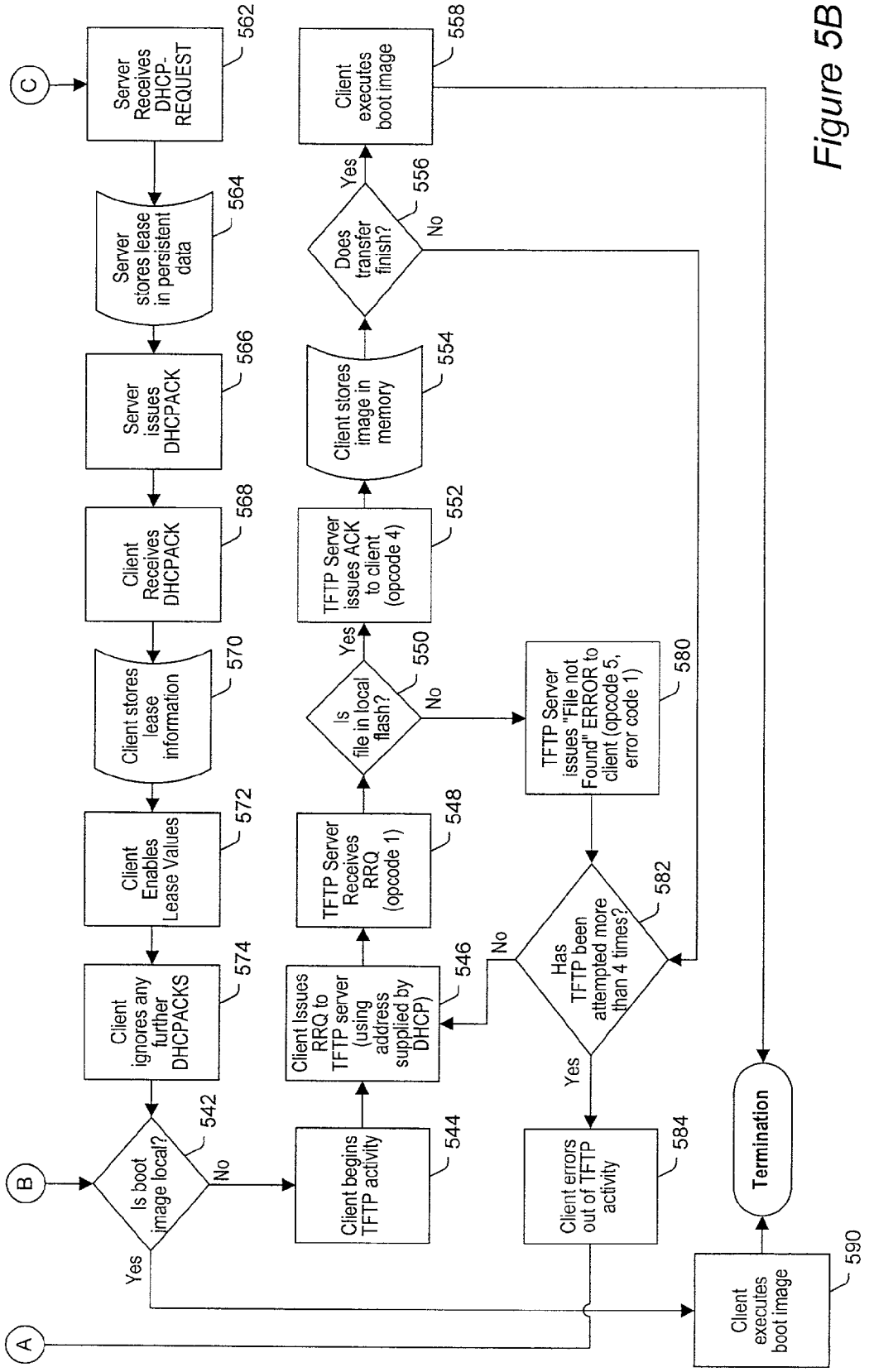
A
B
C
Is boot image local?
542
Yes
No
Client ignores any further DHCPACKS
574
Client Enables Lease Values
572
Client stores lease information
570
Client Receives DHCPACK
568
Server issues DHCPACK
566
Server stores lease in persistent data
564
Server Receives DHCP-REQUEST
562
Client begins TFTP activity
544
Client Issues RRQ to TFTP server (using address supplied by DHCP)
546
TFTP Server Receives RRQ (opcode 1)
548
Is file in local flash?
550
Yes
No
TFTP Server issues ACK to client (opcode 4)
552
Client stores image in memory
554
Does transfer finish?
556
Yes
No
Client executes boot image
558
TFTP Server issues "File not Found" ERROR to client (opcode 5, error code 1)
580
Has TFTP been attempted more than 4 times?
582
No
Yes
Client errors out of TFTP activity
584
Client executes boot image
590
Termination

Figure 5B

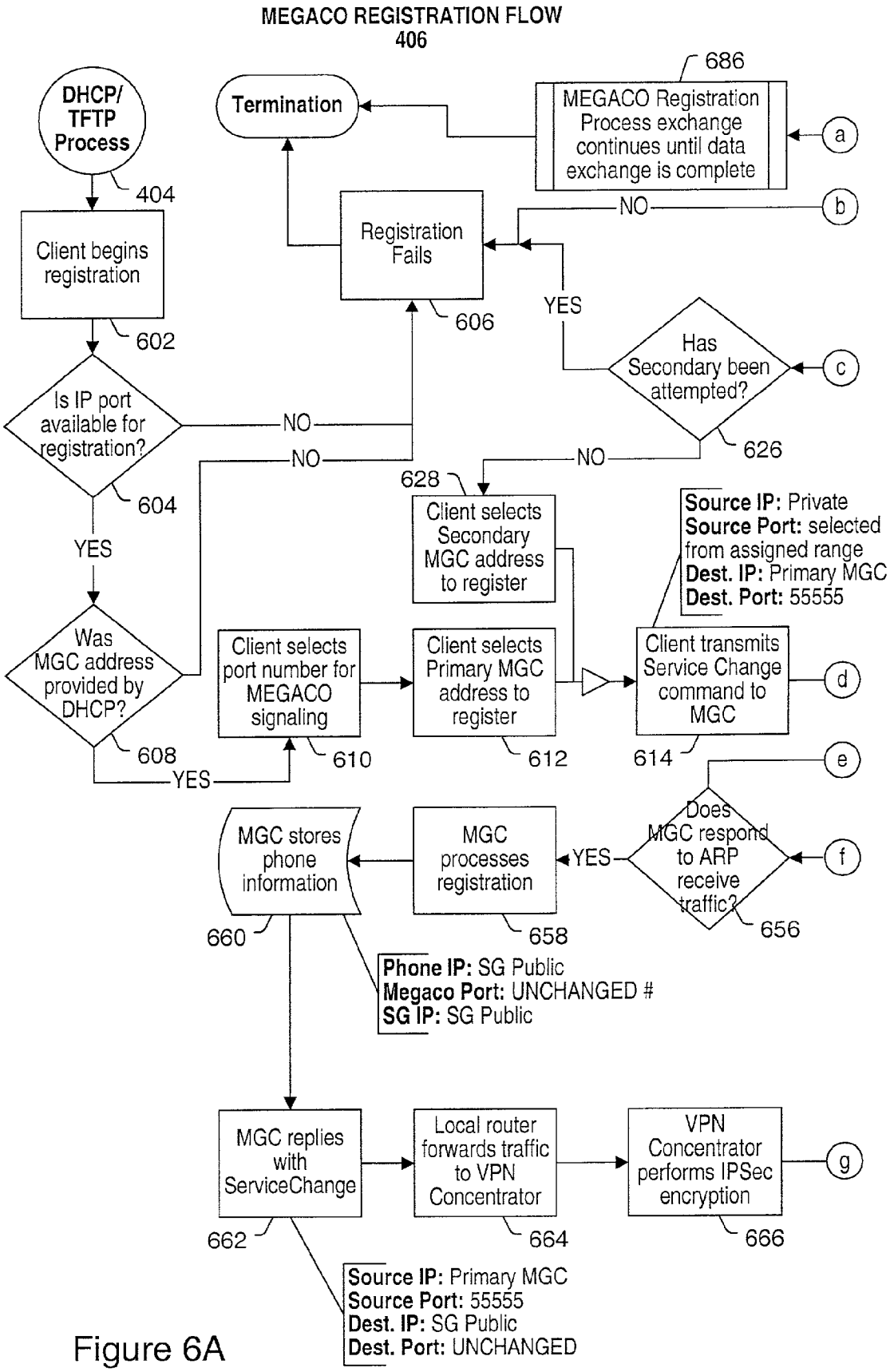
MEGACO REGISTRATION FLOW
406
DHCP/ TFTP Process
404
Client begins registration
602
Is IP port available for registration?
604
NO
YES
Was MGC address provided by DHCP?
608
YES
NO
Termination
Registration Fails
606
686
MEGACO Registration Process exchange continues until data exchange is complete
a
NO
b
YES
Has Secondary been attempted?
626
c
NO
628
Client selects Secondary MGC address to register
Source IP: Private
Source Port: selected from assigned range
Dest. IP: Primary MGC
Dest. Port: 55555
Client selects port number for MEGACO signaling
610
Client selects Primary MGC address to register
612
Client transmits Service Change command to MGC
614
d
e
Does MGC respond to ARP receive traffic?
656
f
YES
MGC processes registration
658
MGC stores phone information
660
Phone IP: SG Public
Megaco Port: UNCHANGED #
SG IP: SG Public
MGC replies with ServiceChange
662
Local router forwards traffic to VPN Concentrator
664
VPN Concentrator performs IPSec encryption
666
g
Source IP: Primary MGC
Source Port: 55555
Dest. IP: SG Public
Dest. Port: UNCHANGED

Figure 6A

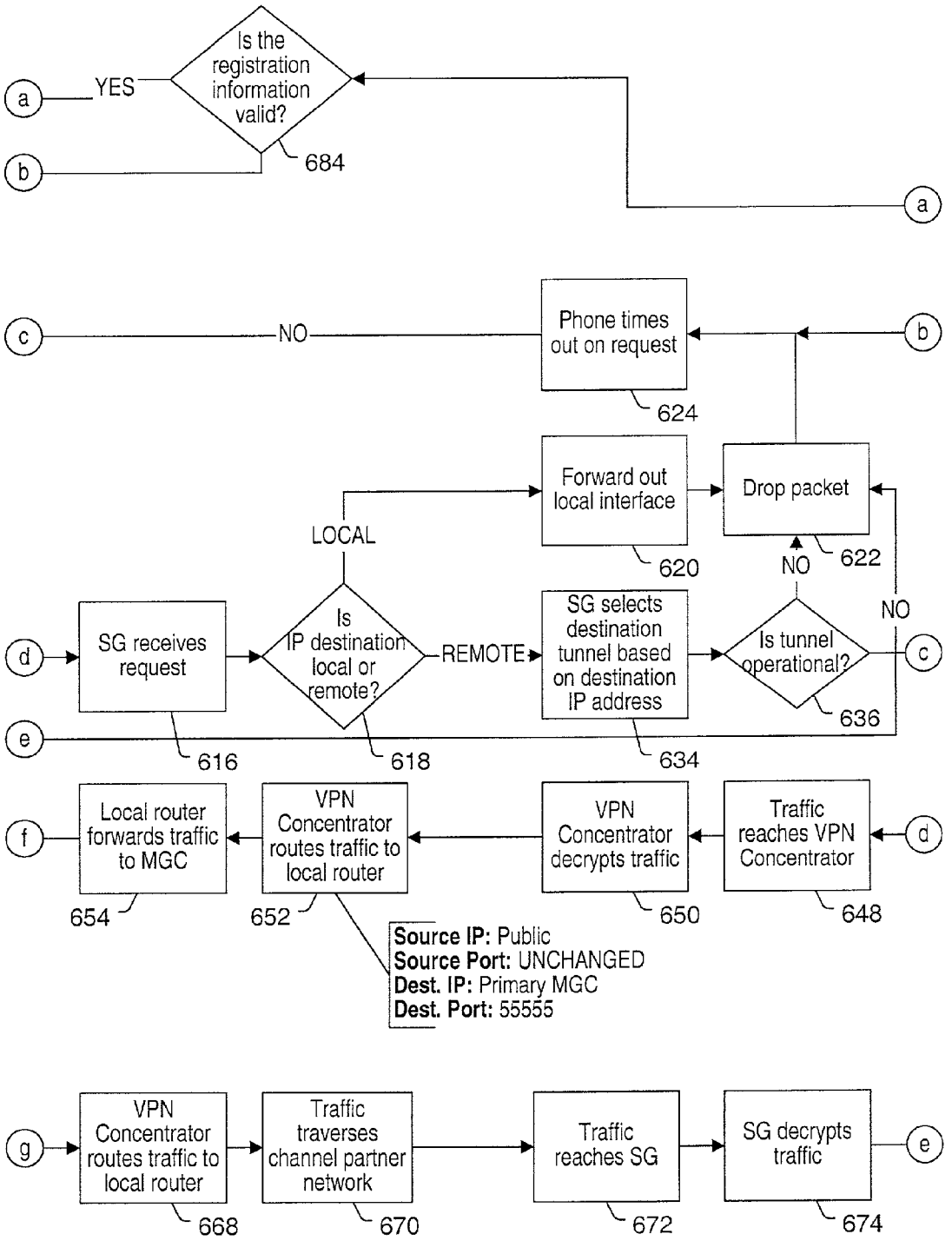
Is the registration information valid?
YES
684
a
b
a
c
NO
Phone times out on request
624
b
Forward out local interface
620
Drop packet
622
LOCAL
NO
NO
d
SG receives request
616
Is IP destination local or remote?
618
REMOTE
SG selects destination tunnel based on destination IP address
634
Is tunnel operational?
636
c
e
f
Local router forwards traffic to MGC
654
VPN Concentrator routes traffic to local router
652
VPN Concentrator decrypts traffic
650
Traffic reaches VPN Concentrator
648
d
Source IP: Public
Source Port: UNCHANGED
Dest. IP: Primary MGC
Dest. Port: 55555
g
VPN Concentrator routes traffic to local router
668
Traffic traverses channel partner network
670
Traffic reaches SG
672
SG decrypts traffic
674
e

Figure 6B

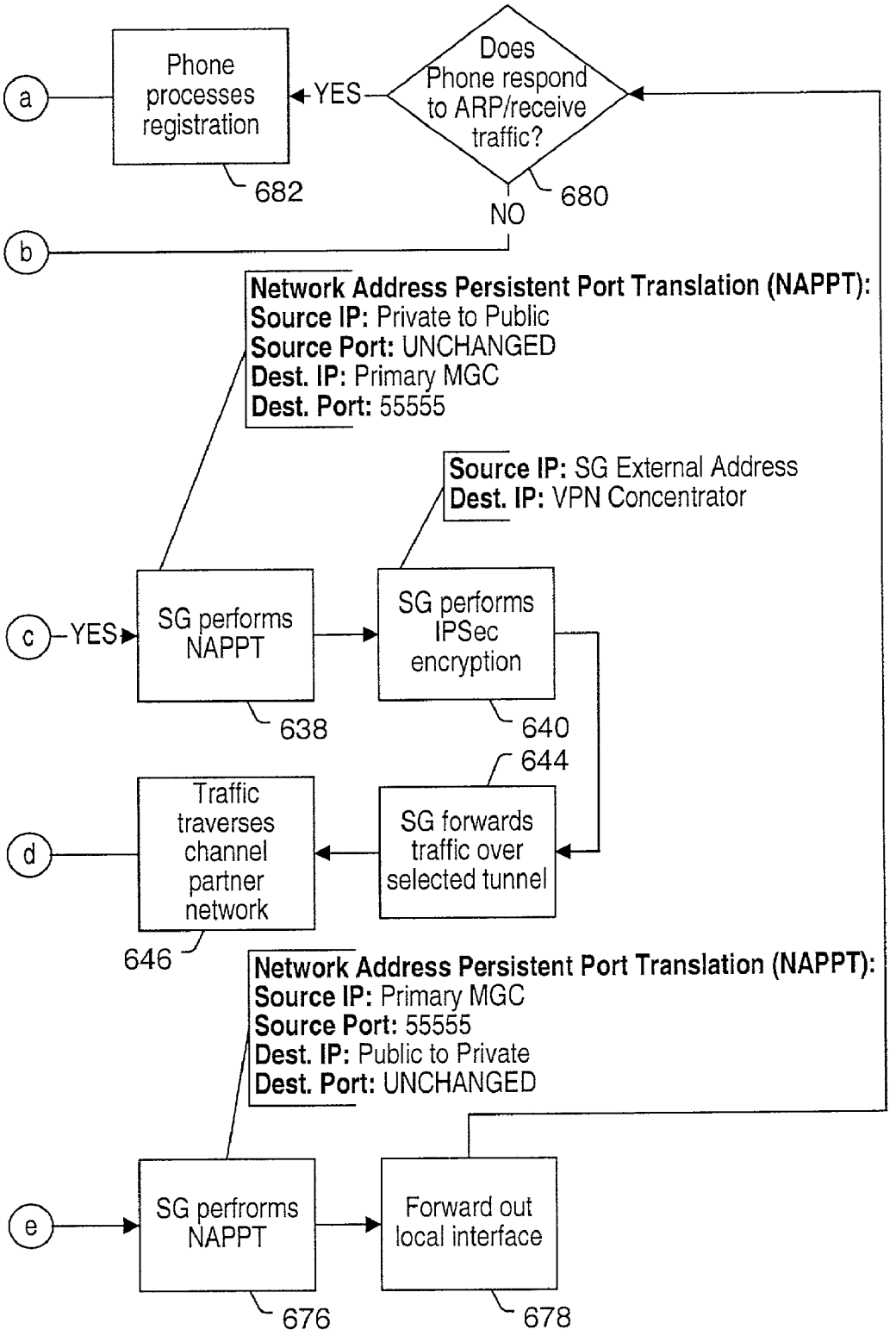
a
Phone processes registration
682
YES
Does Phone respond to ARP/receive traffic?
680
NO
b
Network Address Persistent Port Translation (NAPPT):
Source IP: Private to Public
Source Port: UNCHANGED
Dest. IP: Primary MGC
Dest. Port: 55555
Source IP: SG External Address
Dest. IP: VPN Concentrator
c
YES
SG performs NAPPT
638
SG performs IPSec encryption
640
644
d
Traffic traverses channel partner network
646
SG forwards traffic over selected tunnel
Network Address Persistent Port Translation (NAPPT):
Source IP: Primary MGC
Source Port: 55555
Dest. IP: Public to Private
Dest. Port: UNCHANGED
e
SG perfrorms NAPPT
676
Forward out local interface
678

Figure 6C

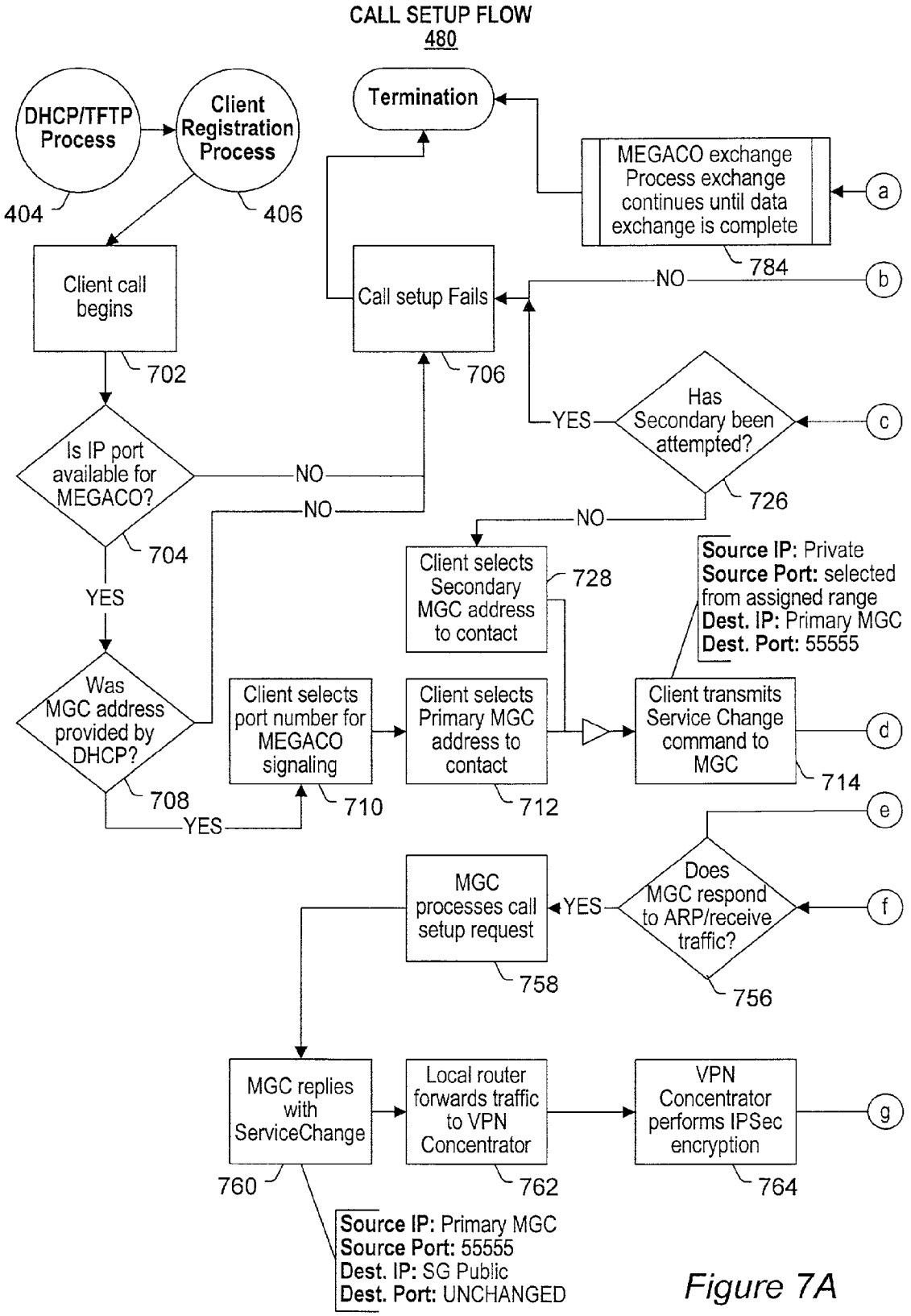
CALL SETUP FLOW
480
DHCP/TFTP Process
Client Registration Process
404
406
Termination
MEGACO exchange Process exchange continues until data exchange is complete
784
a
Client call begins
702
Call setup Fails
706
NO
b
Has Secondary been attempted?
726
YES
c
Is IP port available for MEGACO?
704
NO
NO
NO
YES
Client selects Secondary MGC address to contact
728
Source IP: Private
Source Port: selected from assigned range
Dest. IP: Primary MGC
Dest. Port: 55555
Was MGC address provided by DHCP?
708
YES
Client selects port number for MEGACO signaling
710
Client selects Primary MGC address to contact
712
Client transmits Service Change command to MGC
714
d
e
Does MGC respond to ARP/receive traffic?
756
f
YES
MGC processes call setup request
758
MGC replies with ServiceChange
760
Local router forwards traffic to VPN Concentrator
762
VPN Concentrator performs IPSec encryption
764
g
Source IP: Primary MGC
Source Port: 55555
Dest. IP: SG Public
Dest. Port: UNCHANGED

Figure 7A

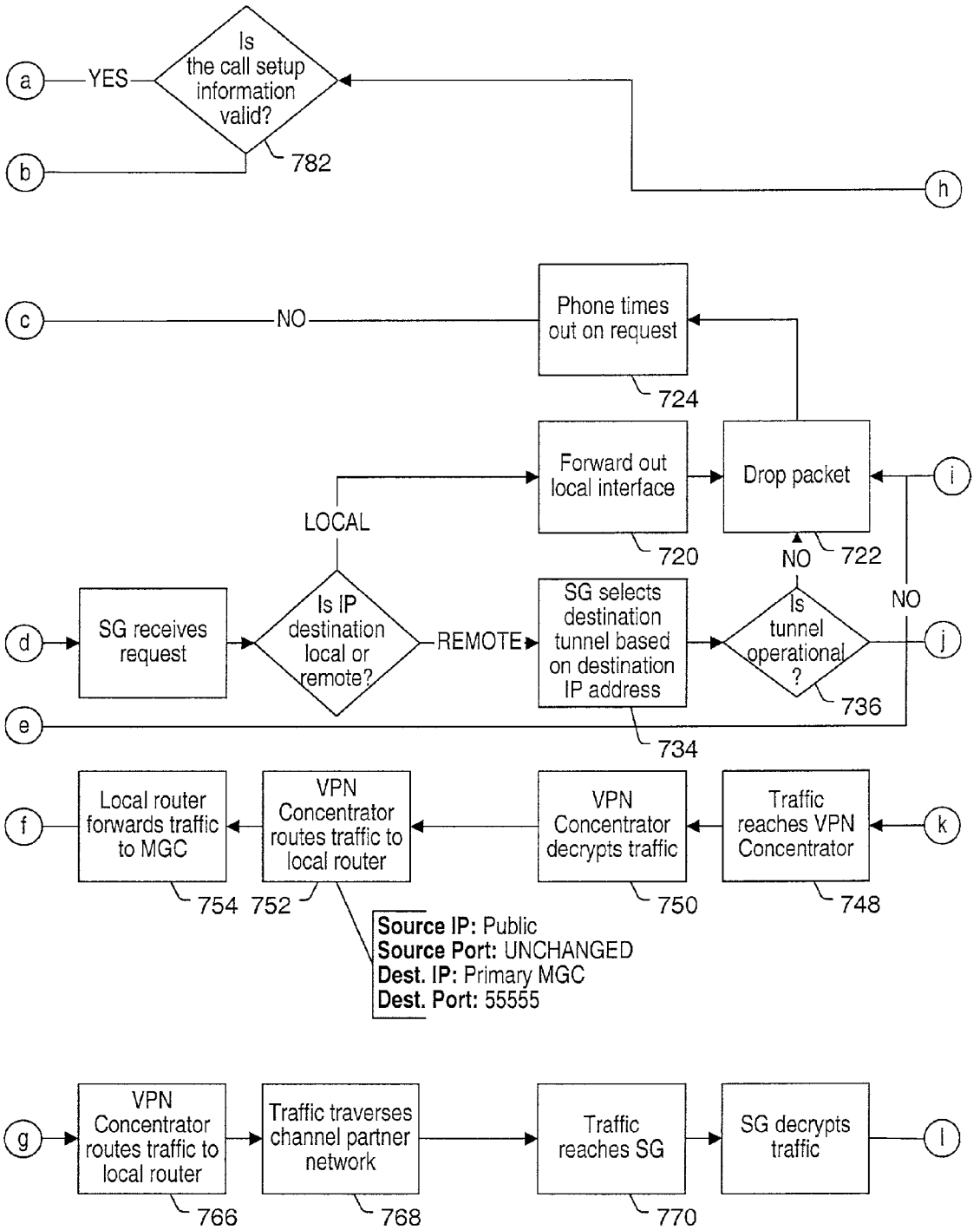
a
YES
Is the call setup information valid?
782
b
h
c
NO
Phone times out on request
724
Forward out local interface
Drop packet
i
LOCAL
720
NO
722
NO
d
SG receives request
Is IP destination local or remote?
REMOTE
SG selects destination tunnel based on destination IP address
Is tunnel operational ?
j
736
e
734
f
Local router forwards traffic to MGC
VPN Concentrator routes traffic to local router
VPN Concentrator decrypts traffic
Traffic reaches VPN Concentrator
k
754
752
750
748
Source IP: Public
Source Port: UNCHANGED
Dest. IP: Primary MGC
Dest. Port: 55555
g
VPN Concentrator routes traffic to local router
Traffic traverses channel partner network
Traffic reaches SG
SG decrypts traffic
l
766
768
770

Figure 7B

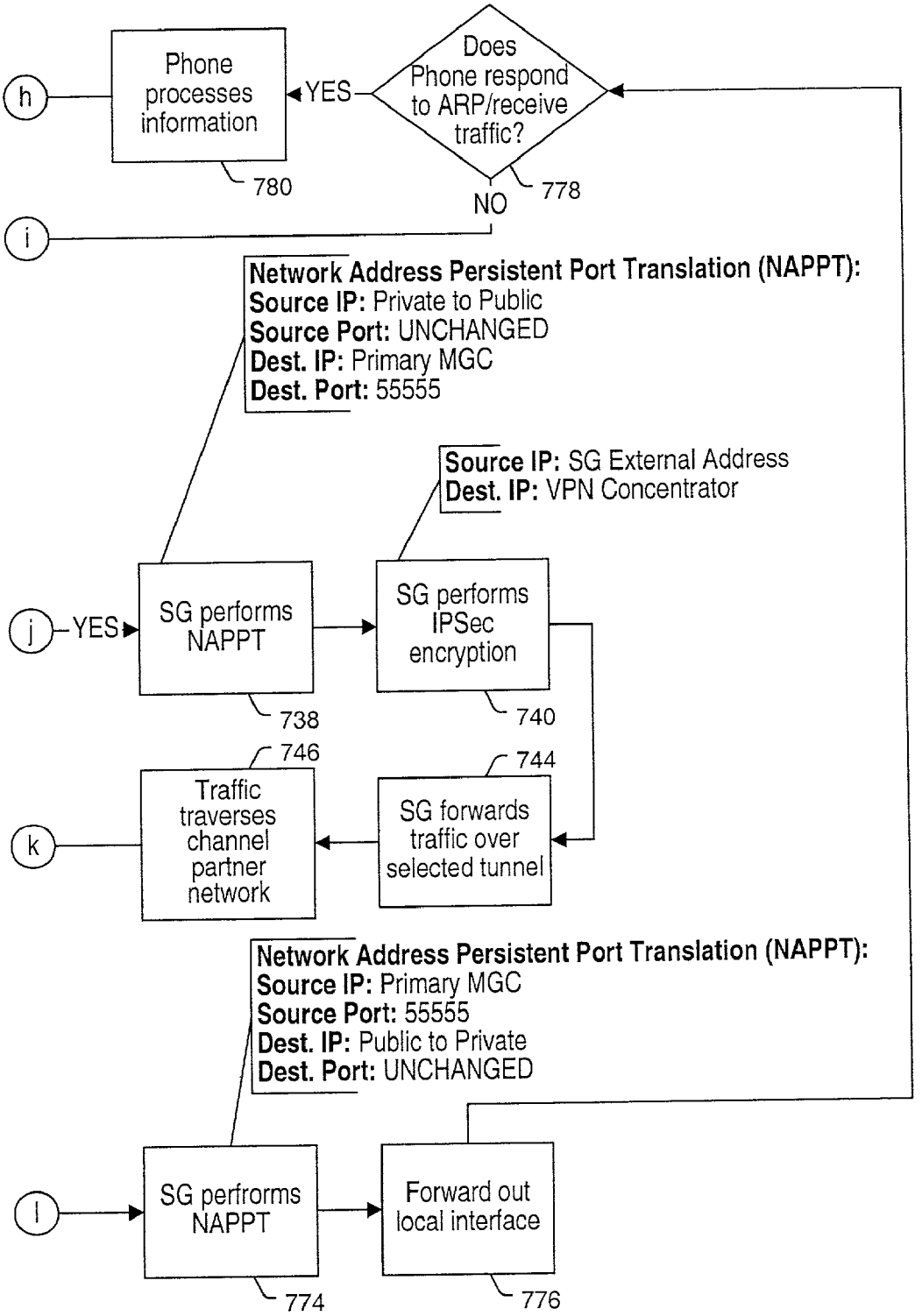
h
Phone processes information
780
YES
Does Phone respond to ARP/receive traffic?
778
NO
i
Network Address Persistent Port Translation (NAPPT):
Source IP: Private to Public
Source Port: UNCHANGED
Dest. IP: Primary MGC
Dest. Port: 55555
Source IP: SG External Address
Dest. IP: VPN Concentrator
j
YES
SG performs NAPPT
738
SG performs IPSec encryption
740
746
744
k
Traffic traverses channel partner network
SG forwards traffic over selected tunnel
Network Address Persistent Port Translation (NAPPT):
Source IP: Primary MGC
Source Port: 55555
Dest. IP: Public to Private
Dest. Port: UNCHANGED
l
SG perfrorms NAPPT
774
Forward out local interface
776

Figure 7C

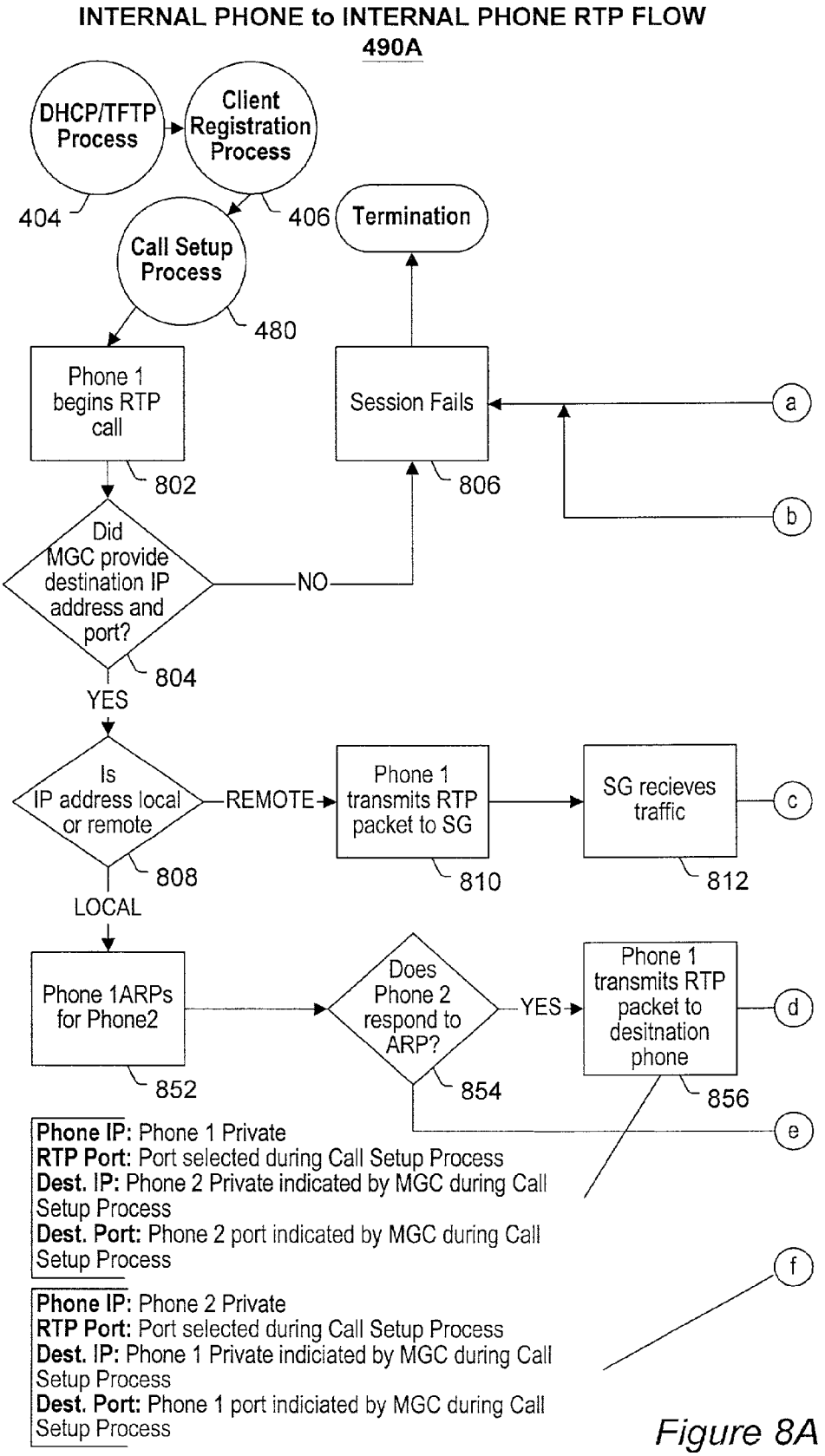
INTERNAL PHONE to INTERNAL PHONE RTP FLOW
490A
DHCP/TFTP Process
Client Registration Process
404
406
Termination
Call Setup Process
480
Phone 1 begins RTP call
Session Fails
a
802
806
b
Did MGC provide destination IP address and port?
NO
804
YES
Is IP address local or remote
REMOTE
Phone 1 transmits RTP packet to SG
SG recieves traffic
c
808
810
812
LOCAL
Phone 1ARPs for Phone2
Does Phone 2 respond to ARP?
YES
Phone 1 transmits RTP packet to desitnation phone
d
852
854
856
e
Phone IP: Phone 1 Private
RTP Port: Port selected during Call Setup Process
Dest. IP: Phone 2 Private indicated by MGC during Call Setup Process
Dest. Port: Phone 2 port indicated by MGC during Call Setup Process
f
Phone IP: Phone 2 Private
RTP Port: Port selected during Call Setup Process
Dest. IP: Phone 1 Private indiciated by MGC during Call Setup Process
Dest. Port: Phone 1 port indiciated by MGC during Call Setup Process

Figure 8A

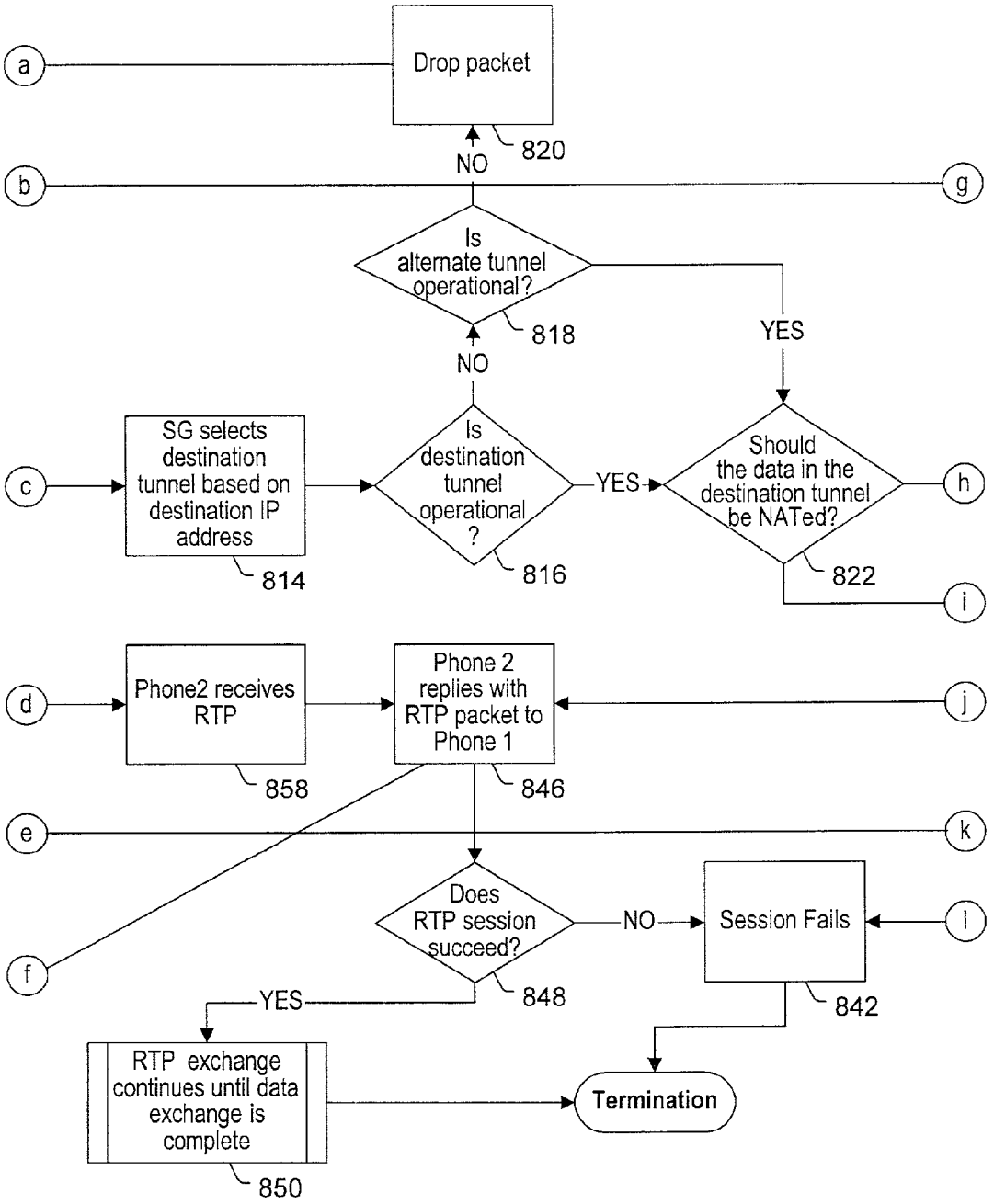
a
Drop packet
820
NO
b
g
Is alternate tunnel operational?
818
YES
NO
c
SG selects destination tunnel based on destination IP address
814
Is destination tunnel operational ?
816
YES
Should the data in the destination tunnel be NATed?
822
h
i
d
Phone2 receives RTP
858
Phone 2 replies with RTP packet to Phone 1
846
j
e
k
f
Does RTP session succeed?
848
NO
Session Fails
842
l
YES
RTP exchange continues until data exchange is complete
850
Termination

Figure 8B

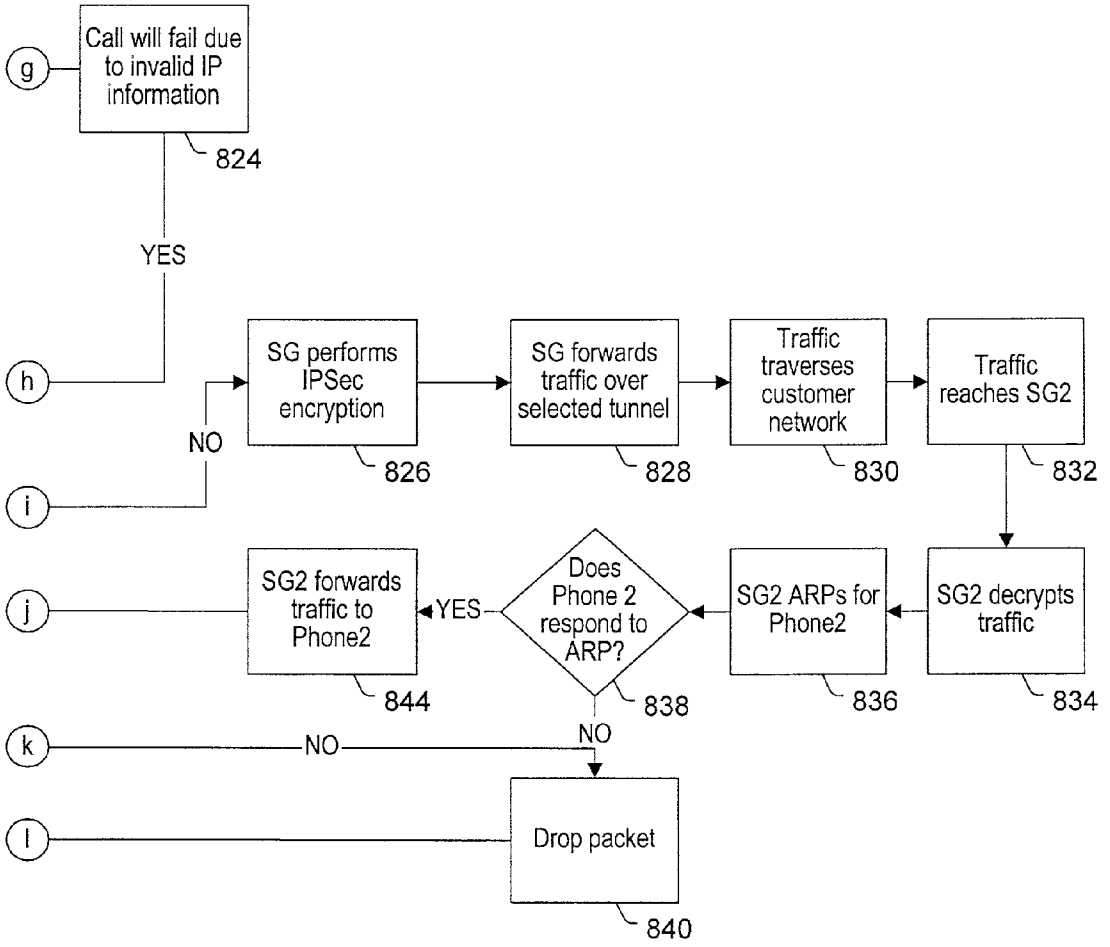
g
Call will fail due to invalid IP information
824
YES
h
NO
i
SG performs IPSec encryption
826
SG forwards traffic over selected tunnel
828
Traffic traverses customer network
830
Traffic reaches SG2
832
SG2 decrypts traffic
834
SG2 ARPs for Phone2
836
Does Phone 2 respond to ARP?
838
YES
NO
j
SG2 forwards traffic to Phone2
844
k
NO
l
Drop packet
840

Figure 8C

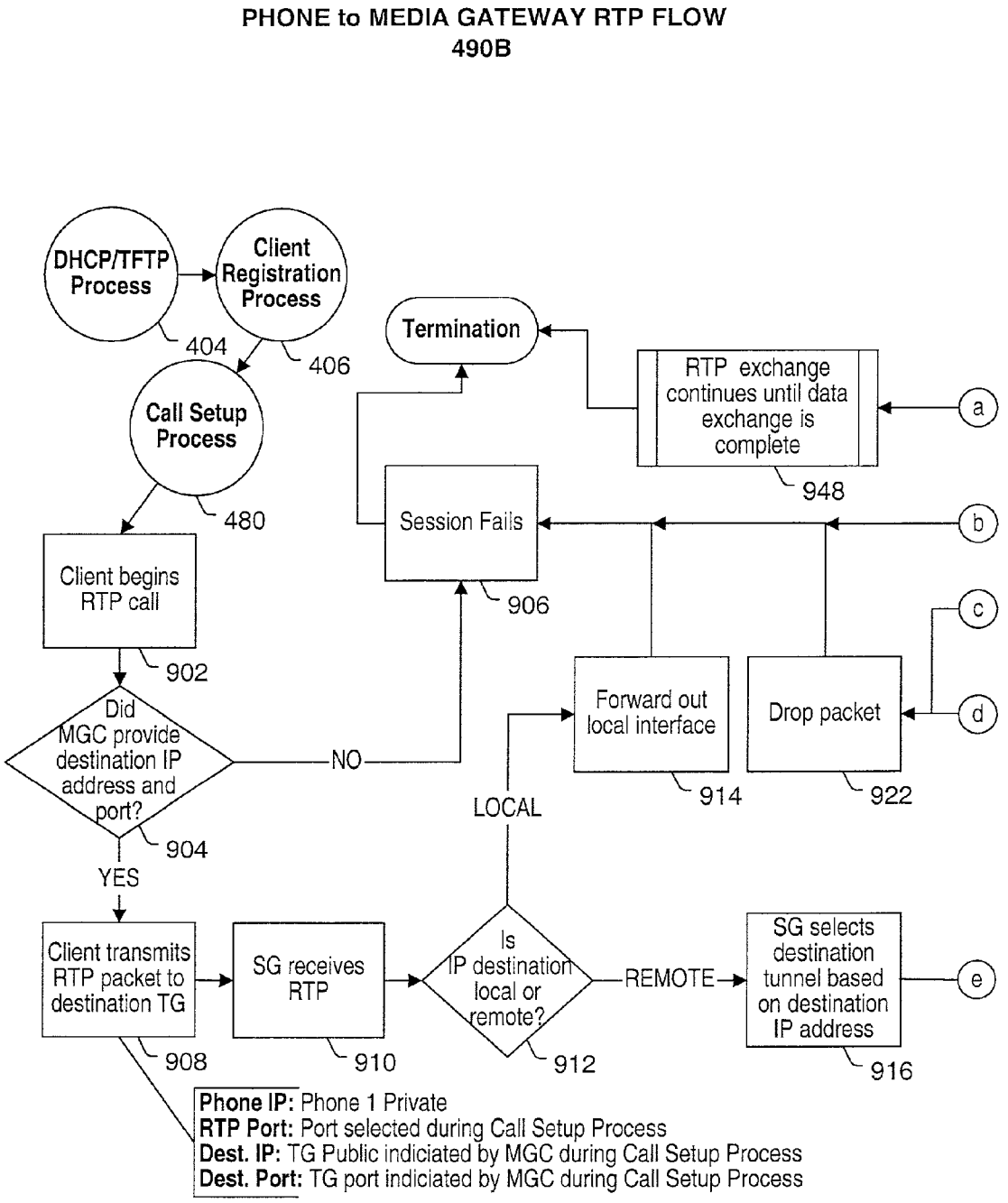
PHONE to MEDIA GATEWAY RTP FLOW
490B
DHCP/TFTP Process
Client Registration Process
404
406
Call Setup Process
480
Termination
RTP exchange continues until data exchange is complete
948
a
Session Fails
906
b
Client begins RTP call
902
c
Forward out local interface
914
Drop packet
922
d
Did MGC provide destination IP address and port?
904
NO
YES
LOCAL
Client transmits RTP packet to destination TG
908
SG receives RTP
910
Is IP destination local or remote?
912
REMOTE
SG selects destination tunnel based on destination IP address
916
e
Phone IP: Phone 1 Private
RTP Port: Port selected during Call Setup Process
Dest. IP: TG Public indiciated by MGC during Call Setup Process
Dest. Port: TG port indiciated by MGC during Call Setup Process

Figure 9A

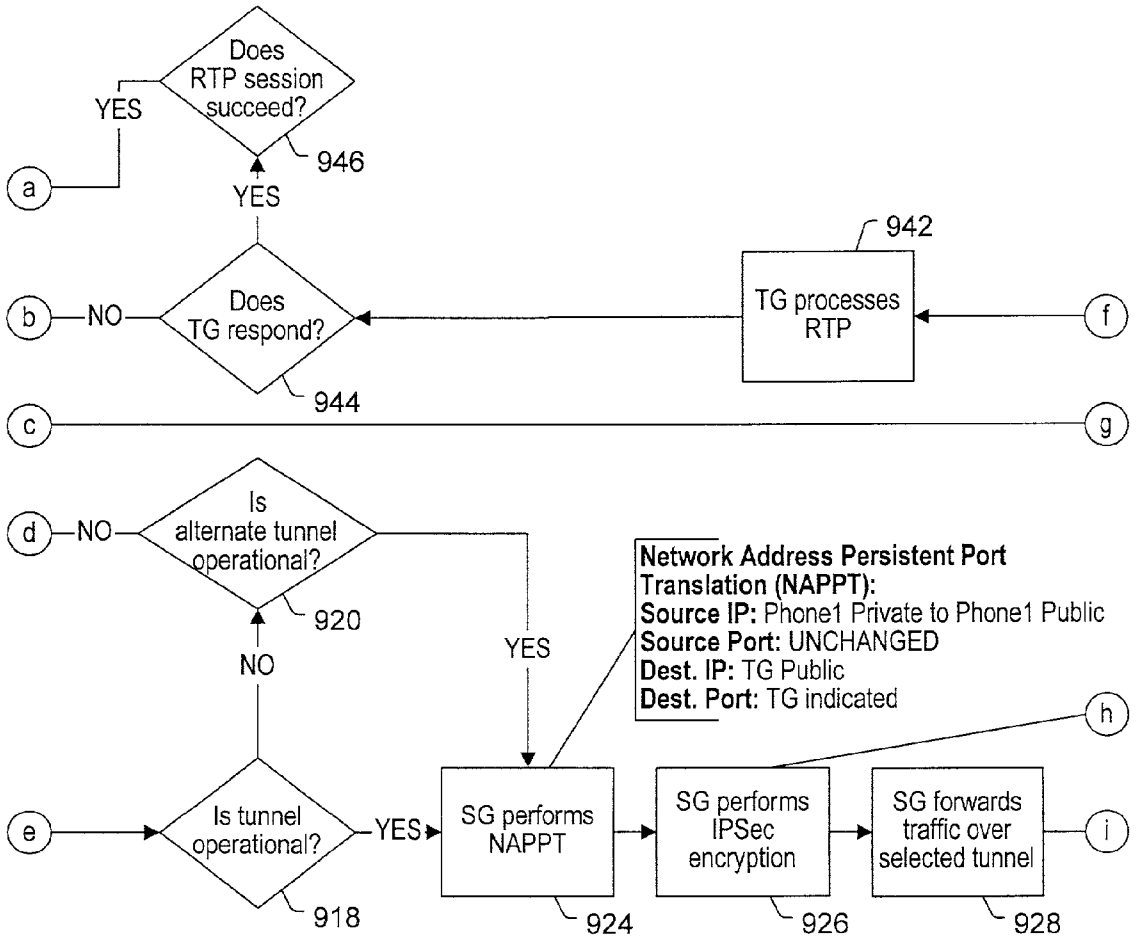
Does RTP session succeed?
946
YES
YES
a
Does TG respond?
944
b
NO
TG processes RTP
942
f
c
g
Is alternate tunnel operational?
920
d
NO
YES
NO
Network Address Persistent Port Translation (NAPPT):
Source IP: Phone1 Private to Phone1 Public
Source Port: UNCHANGED
Dest. IP: TG Public
Dest. Port: TG indicated
h
e
Is tunnel operational?
918
YES
SG performs NAPPT
924
SG performs IPSec encryption
926
SG forwards traffic over selected tunnel
928
i

Figure 9B

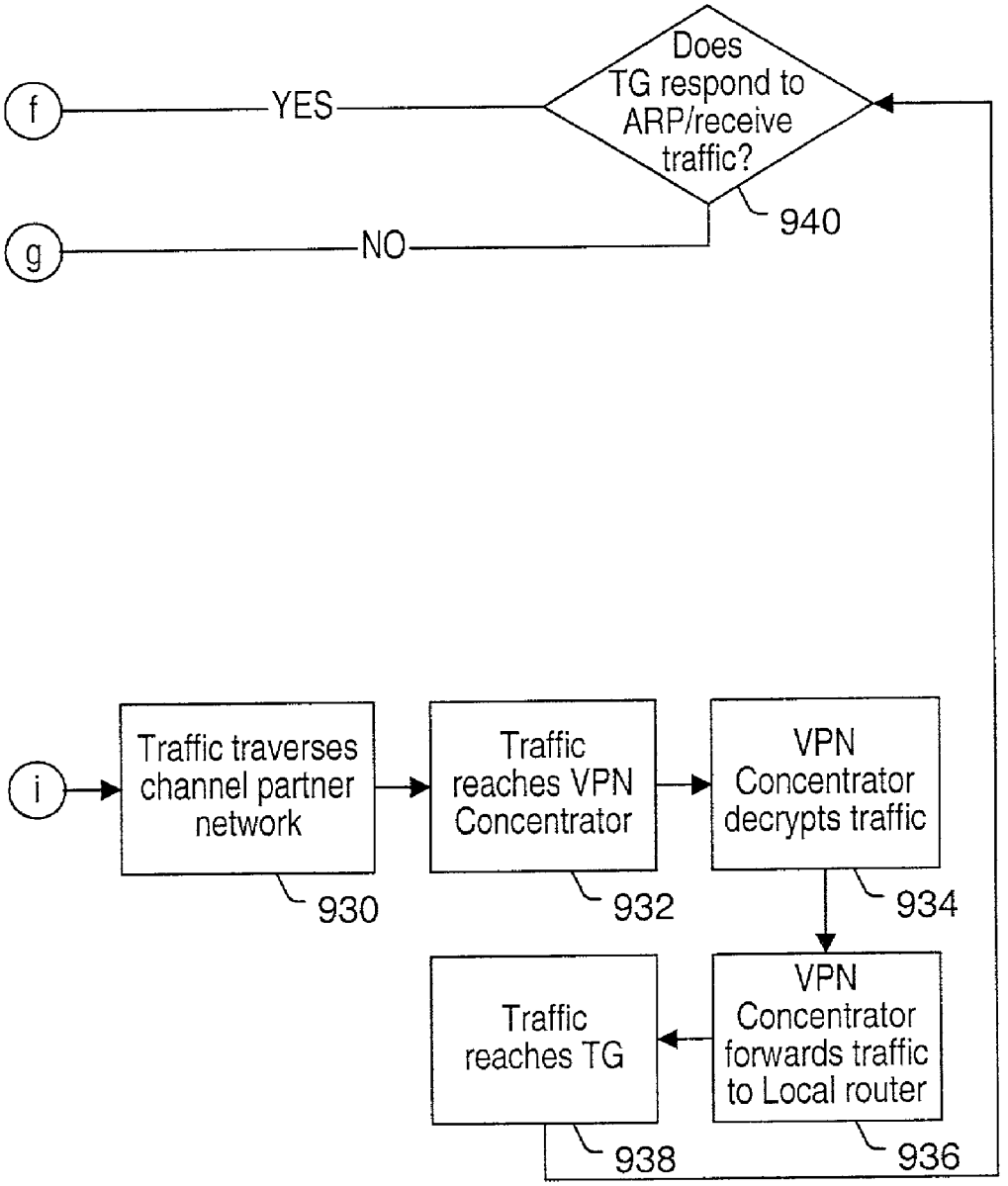
f
YES
Does TG respond to ARP/receive traffic?
940
g
NO
i
Traffic traverses channel partner network
930
Traffic reaches VPN Concentrator
932
VPN Concentrator decrypts traffic
934
VPN Concentrator forwards traffic to Local router
936
Traffic reaches TG
938

Figure 9C

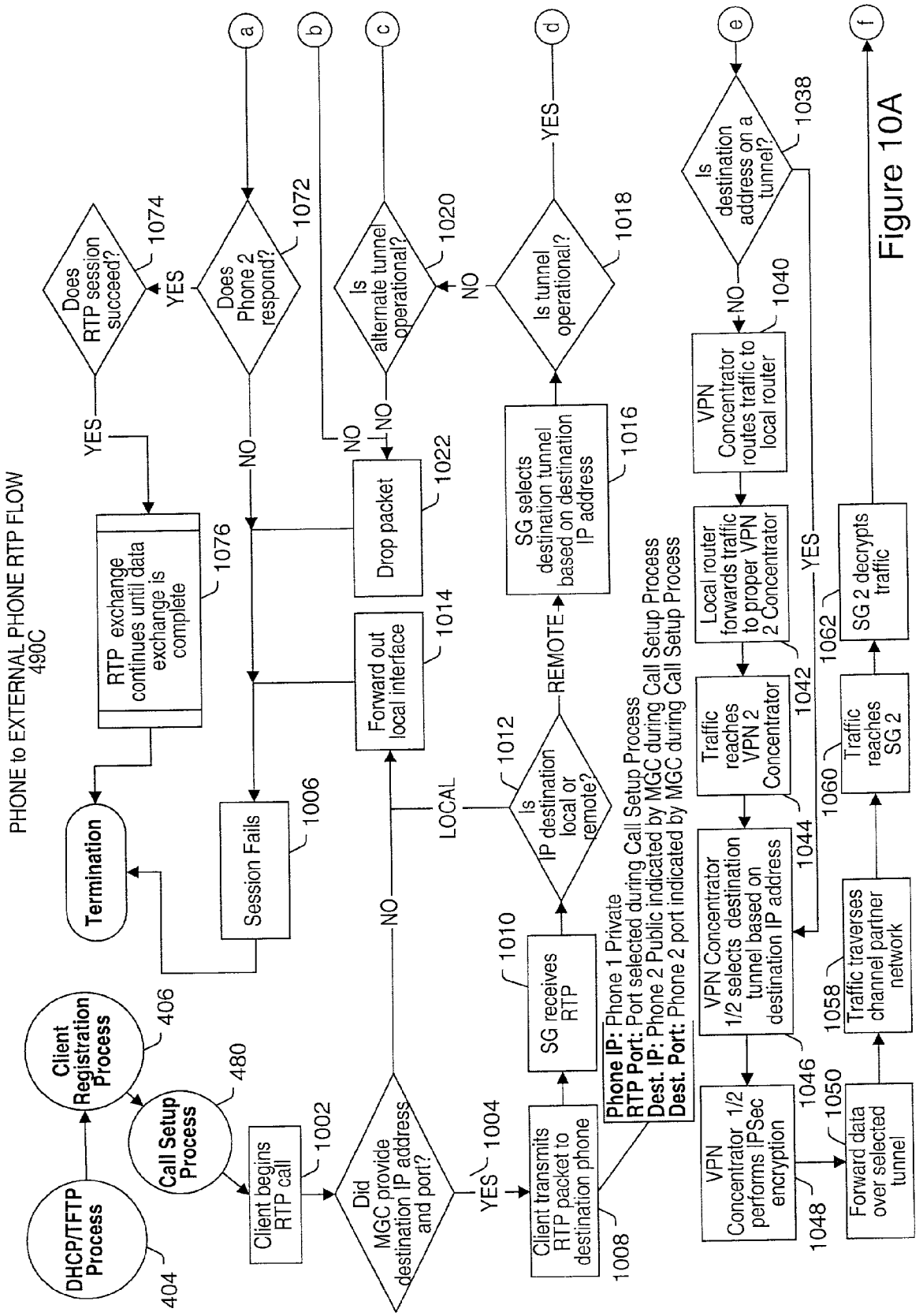
PHONE to EXTERNAL PHONE RTP FLOW
490C
DHCP/TFTP Process
404
Client Registration Process
406
Call Setup Process
480
Client begins RTP call
1002
Did MGC provide destination IP address and port?
1004
YES
NO
Client transmits RTP packet to destination phone
1008
SG receives RTP
1010
Is IP destination local or remote?
1012
LOCAL
REMOTE
Forward out local interface
1014
Drop packet
1022
Session Fails
1006
Termination
RTP exchange continues until data exchange is complete
1076
Does RTP session succeed?
1074
Does Phone 2 respond?
1072
Is alternate tunnel operational?
1020
Is tunnel operational?
1018
SG selects destination tunnel based on destination IP address
1016
a
b
c
d
e
f
Phone IP: Phone 1 Private
RTP Port: Port selected during Call Setup Process
Dest. IP: Phone 2 Public indicated by MGC during Call Setup Process
Dest. Port: Phone 2 port indicated by MGC during Call Setup Process
VPN Concentrator 1/2 performs IPSec encryption
1048
Forward data over selected tunnel
1050
VPN Concentrator 1/2 selects destination tunnel based on destination IP address
1046
Traffic reaches VPN 2 Concentrator
1044
Local router forwards traffic to proper VPN 2 Concentrator
1042
VPN Concentrator routes traffic to local router
1040
Is destination address on a tunnel?
1038
Traffic traverses channel partner network
1058
Traffic reaches SG 2
1060
SG 2 decrypts traffic
1062

Figure 10A

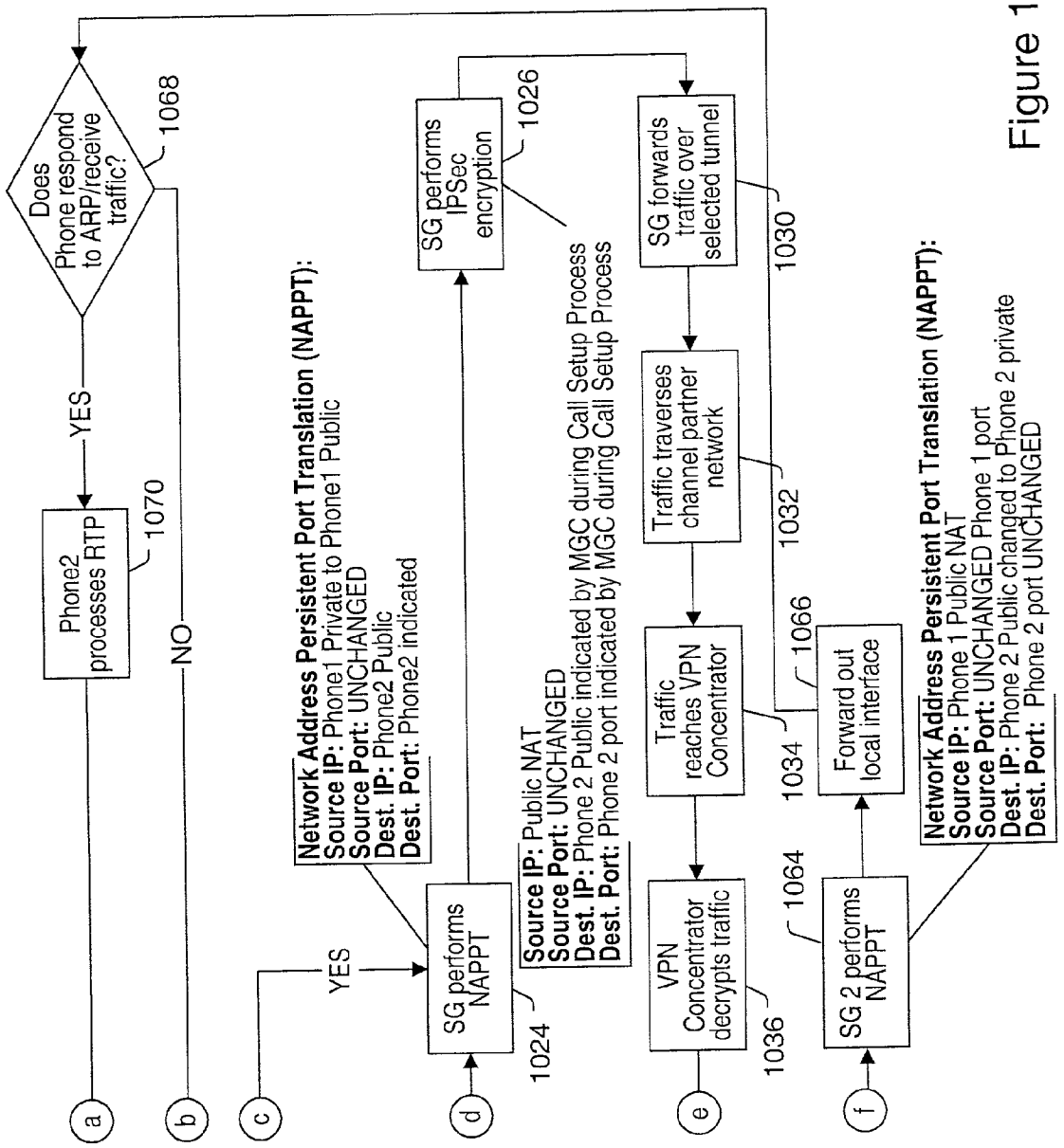
Does Phone respond to ARP/receive traffic?
1068
YES
NO
Phone2 processes RTP
1070
a
b
c
YES
SG performs NAPPT
1024
Network Address Persistent Port Translation (NAPPT):
Source IP: Phone1 Private to Phone1 Public
Source Port: UNCHANGED
Dest. IP: Phone2 Public
Dest. Port: Phone2 indicated
d
SG performs IPSec encryption
1026
Source IP: Public NAT
Source Port: UNCHANGED
Dest. IP: Phone 2 Public indicated by MGC during Call Setup Process
Dest. Port: Phone 2 port indicated by MGC during Call Setup Process
VPN Concentrator decrypts traffic
1036
e
Traffic reaches VPN Concentrator
1034
Traffic traverses channel partner network
1032
SG forwards traffic over selected tunnel
1030
1066
Forward out local interface
1064
SG 2 performs NAPPT
f
Network Address Persistent Port Translation (NAPPT):
Source IP: Phone 1 Public NAT
Source Port: UNCHANGED Phone 1 port
Dest. IP: Phone 2 Public changed to Phone 2 private
Dest. Port: Phone 2 port UNCHANGED

Figure 10B

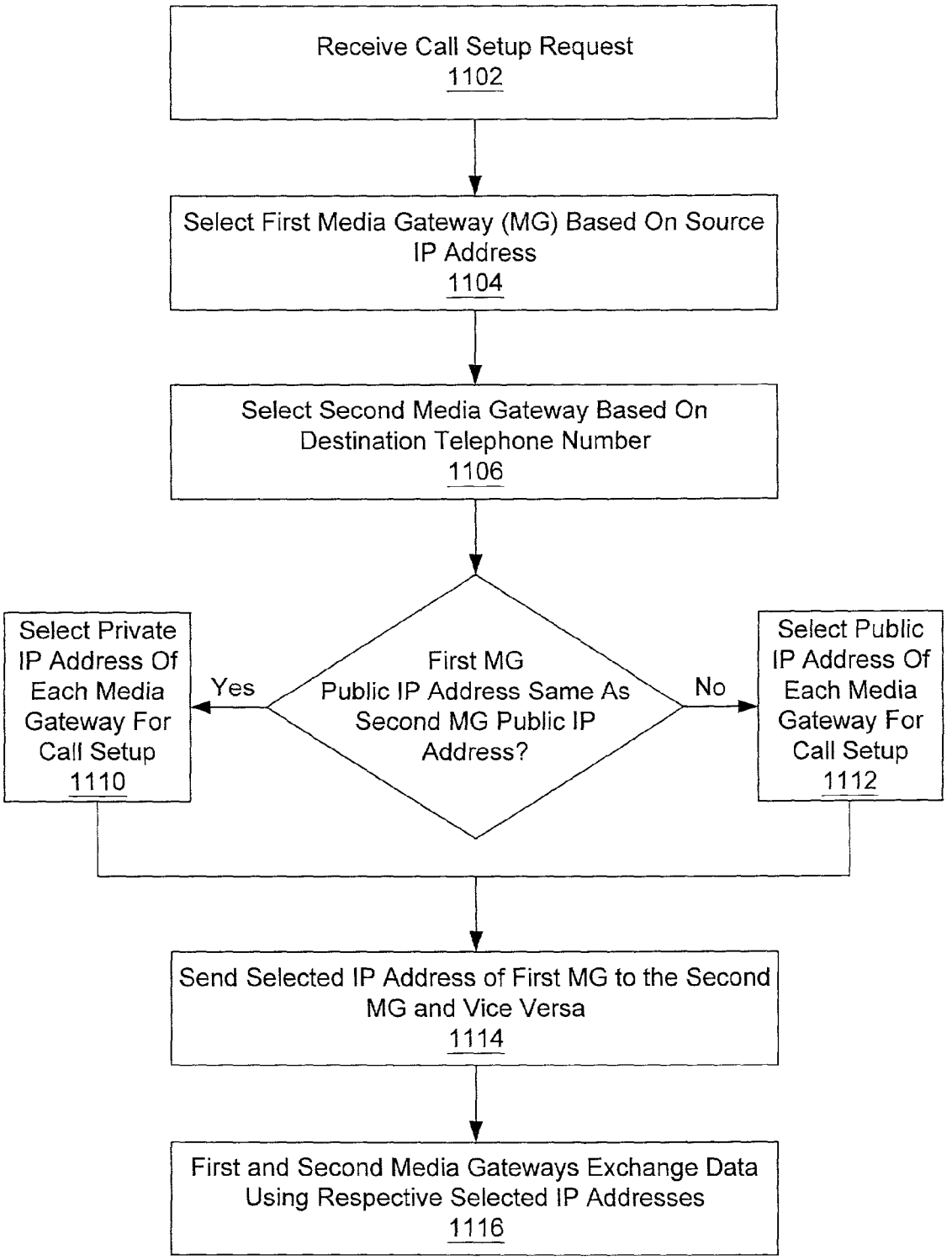
Receive Call Setup Request
1102
Select First Media Gateway (MG) Based On Source IP Address
1104
Select Second Media Gateway Based On Destination Telephone Number
1106
First MG Public IP Address Same As Second MG Public IP Address?
Yes
No
Select Private IP Address Of Each Media Gateway For Call Setup
1110
Select Public IP Address Of Each Media Gateway For Call Setup
1112
Send Selected IP Address of First MG to the Second MG and Vice Versa
1114
First and Second Media Gateways Exchange Data Using Respective Selected IP Addresses
1116

Figure 11

SYSTEM AND METHOD FOR ROUTING IP PACKETS

PRIORITY CLAIM

This application claims benefit of priority of U.S. provisional application Ser. No. 60/281,908 titled "SYSTEM AND METHOD FOR IP TELEPHONY" filed Apr. 3, 2001, whose inventors were Richard E. Fangman and Jason D. Preston.

FIELD OF THE INVENTION

The present invention relates to the field of telephony, and more particularly to Internet Protocol (IP) based telephony.

DESCRIPTION OF THE RELATED ART

Voice over Internet Protocol (VoIP) refers to the technology to make telephone calls and send faxes over IP-based data networks with a suitable quality of service (QoS) and superior cost/benefit. The main justifications for development of VoIP can be summarized as follows:

Cost reduction—VoIP technologies can provide substantial savings in long distance telephone costs, which is extremely important to most companies, particularly those with international markets.

Simplification—An integrated voice/data network allows more standardization and reduces total equipment needs.

Consolidation—The ability to eliminate points of failure, consolidate accounting systems and combine operations, providing for more efficient operations.

Advanced Applications—The long run benefits of VoIP include support for multimedia and multi-service applications, for which current telephone systems are not equipped.

Growth in the VoIP market is expected to be considerable over the near future. However, there remain many challenges facing developers of VoIP equipment, both in terms of voice quality, latency and packet loss as well as call control and system management. The primary challenges are: the severe restrictions on acquisition and use of registered IP version 4 addresses, the resulting need to use Network Address Translation (NAT) and related technologies, the limitations of existing firewall technologies, and the application layer requirements of VoIP protocols such as MEGACO, RTP, and RTCP.

The American Registry for Internet Numbers (ARIN) has placed severe restrictions on the allocation of routable, public IP addresses due to the popular growth on the Internet, and the rapid depletion of remaining available addresses. In order to conserve address space, ARIN strongly encourages end users to utilize NAT technology to conserve address space. The most common implementation of NAT is NAPT, or Network Address Port Translation. This allows a single public IP address to be used to support thousands of hosts using private (RFC 1918) addresses. The major problem with NAT is that it only modifies the source IP address and port information in the IP header, and not anywhere in the payload. A typical VoIP protocol uses the IP and port information of the host in the payload for caller identification and call routing. Thus, when a Media Gateway Controller (MGC) or Trunking Gateway (TG) receives communication from an end-node with conflicting information, considerable problems may result. Note that as used herein, the term "Trunking Gateway" refers to any device that simultaneously receives multiple analog inputs and encodes the signal into multiple corresponding IP data streams. A

Trunking Gateway may also perform the reverse function of simultaneously taking multiple signals encoded into a multiple IP data streams and converting it to multiple corresponding analog signals.

The NAT process is also dynamic, and so a host will be associated with a specific port number only during the session in progress. The next session will almost assuredly be over a different port. This problem is exacerbated by the fact that two end nodes that need to communicate directly may be using the same private IP address.

Another issue relates to the firewall. Firewalls are typically designed to protect internal networks from external networks, and generally need to be aware of when sessions open and close so that the network does not remain vulnerable. Most protocols used on the Internet are TCP based, and thus the firewall can determine when sessions are opened and closed based on SYN and FIN messages. Unfortunately, most VoIP protocols are UDP based, and therefore do not utilize SYN and FIN messages that the firewall can detect. Complicating matters further, VoIP protocols often use pairs of ports for communication, initiated from both the inside and outside of the network. Firewalls tend to support single port communication only initiated from the inside. Additionally, triangulated communications between IP telephones present a particular problem, referred to as the "triangle problem", described below.

The traditional solution to an upper-layer protocol that does not work with NAT is an Application Level Gateway (ALG). An ALG acts as a proxy by modifying the IP address and header information in the payload of the various protocols being used (MEGACO, RTP, RTCP) to match the information replaced by the standard NAT function. Additionally, the ALG typically "negotiates" with the NAT gateway to reserve any specific port or port ranges necessary to support the protocols. This has been done for a variety of protocols such as ICMP and FTP, and lately H.323 and SIP (two earlier VoIP standards), and solves the basic problem of public IP to private IP communication. What are not addressed are the more complex interactions such as triangulated routing shown in FIG. **1**. As FIG. **1** shows, a Media Gateway Controller (MGC) **50** is coupled to Application Level Gateway **70**. The AGL **70** is coupled to two IP telephones **20**A and **20**B, respectively. The IP telephones **20** are also coupled to one another directly. If IP telephone **20**A contacts Media Gateway Controller **50** for Call Setup through ALG **70**, the MGC **50** contacts IP telephone **20**B (on the same network as IP telephone **20**A) through ALG **70**, and IP telephone **20**B attempts to contact IP telephone **20**A on the local network, the ALG **70** between IP telephones **20**A and **20**B must be sophisticated enough to only correct the private address information when appropriate.

The above problem may become very complex considering that the ALG **70** must maintain a local table of all internal hosts (IP telephones **20**), examine the call destination address information coming from the MGC **50**, and decide whether or not to modify it when routing it to the internal hosts **20**. The alternative would be to route all traffic through the ALG **70** regardless of whether the destination is in the internal network, perform the ALG function, then the NAT function twice, then the ALG function again, and then route it back out the same interface. This convoluted process would be required for every single packet, introducing substantial inefficiencies to the system.

Therefore, improved systems and methods for IP telephony are desired.

SUMMARY OF THE INVENTION

The present invention includes various embodiments of a system and method for performing IP telephony. In one embodiment, the system may include a network, at least one Media Gateway, such as an IP telephone or Trunking Gateway, a Service Gateway, operable to couple to the Media Gateway through the network, and a Media Gateway Controller, operable to couple to the Service Gateway and the at least one Media Gateway through the network.

In one embodiment, the Media Gateway may be an IP (Internet Protocol) telephone. The IP telephone may first be activated. In response, the Service Gateway may negotiate a client DHCP lease with the IP telephone. The Service Gateway may use an identifier, e.g., a vendor ID, of the IP telephone to determine a range of port numbers to assign to the IP telephone. In other words, the Service Gateway may receive the identifier from the IP telephone, and if the identifier is valid, assign the port range to the IP telephone. In one embodiment, the Service Gateway may receive a MAC ID of the IP telephone in addition to the vendor ID. The Service Gateway may determine if the MAC ID for the IP telephone is valid, and if the MAC ID is determined to be valid, then determine if the identifier is valid.

The range of port numbers may include one or more port numbers which are not reserved for use by other IP protocols. The client DHCP lease negotiations may include the IP telephone issuing a DHCP discover message to the Service Gateway, which may then issue a DHCP offer to the IP telephone if the identifier is determined to be valid. The DHCP offer may include DHCP lease information based on the validated identifier, such as the range of port numbers and information indicating operational software for the IP telephone. The Service Gateway may store the DHCP lease information. The IP telephone may store the DHCP lease information, and enable DHCP settings included in the DHCP lease information.

The Service Gateway and the IP telephone may then operate to initialize the IP telephone. In one embodiment, the IP telephone may be initialized by executing the indicated operational software to enable IP communications. In one embodiment, the IP telephone may issue a request for the operational software, after which the Service Gateway may provide the operational software to the IP telephone, which may then execute the provided operational software to enable IP communications. In one embodiment, the IP telephone may issue a read request to a file transfer server, e.g., a Trivial File Transfer Protocol (TFTP) Server, for the operational software, which may then provide the operation software to the IP telephone. In one embodiment, the file transfer server may be included in the Service Gateway.

In one embodiment, the IP telephone may be registered by the system, e.g., by the Media Gateway Controller, prior to the Call Setup process. For example, the IP telephone may send a public IP address of the IP telephone to the Media Gateway Controller, which may receive and store the public IP address of the IP telephone. In one embodiment, the IP telephone may also send a private IP address of the IP telephone to the Media Gateway Controller, which may receive and store the private IP address of the IP telephone. The Media Gateway Controller may be operable to use the public IP address and the port range to determine the private IP address, for example, by using look-up tables.

After the registration, IP communications may be performed using the IP telephone, using one or more ports in the range of assigned ports. For example, the Service Gateway may mediate IP communications between the IP telephone and an IP device, such as another IP telephone, or a Trunking Gateway, among others.

In one embodiment, performing IP communications using the IP telephone may include the Service Gateway receiving a data packet from the IP telephone, including a private source IP address, a source port number in the assigned range of port numbers, and destination information associated with an IP device. The Service Gateway may then perform a Network Address Persistent Port Translation (NAPPT) on the data packet, and send the data packet to the IP device. Performing NAPPT on the data packet may include changing the private source IP address to a public source IP address while leaving the source port number unchanged, and where the public source IP address and the source port number may be used to uniquely identify the IP telephone.

In another embodiment, performing IP communications using the IP telephone may include the Service Gateway receiving a data packet from the IP device, including a public destination IP address, a destination port number in the assigned range of port numbers, and source information, where the public destination IP address and the destination port number may be used to uniquely identify the IP telephone. The Service Gateway may then perform a Network Address Persistent Port Translation (NAPPT) on the data packet, and send the data packet to the IP telephone. Performing NAPPT on the data packet received from the destination may include using the public destination IP address and the destination port number to uniquely identify the IP telephone, and changing the public destination IP address to a private source IP address of the IP telephone while leaving the destination port number unchanged.

In one embodiment, various embodiments of the methods described above may be included in a memory medium. In another embodiment, various embodiments of the methods described above may be included in a plurality of memory mediums, which may include one or more of an IP telephone memory medium storing IP telephone program instructions, a Service Gateway memory medium storing Service Gateway program instructions, and a Media Gateway Controller memory medium storing Media Gateway Controller program instructions, where the program instructions included in the plurality of memory mediums may be executable to perform various embodiments of the methods described above.

In one embodiment, the system may include the network, two or more Media Gateways coupled through the network, as well as the Media Gateway Controller, coupled to the Media Gateways through the network.

In one embodiment, the Media Gateway Controller may receive a Call Setup request, where the Call Setup request may include a source IP address and a destination telephone number. The Media Gateway Controller may select a first Media Gateway based on the source IP address, and a second Media Gateway based on the destination telephone number.

The Media Gateway Controller may compare a public IP address of the first Media Gateway to a public IP address of the second Media Gateway, and if the public IP address of the first Media Gateway is the same as the public IP address of the second Media Gateway, may select a private IP address of the first Media Gateway and a private IP address of the second Media Gateway for Call Setup. Note that if the public IP addresses of the Media Gateways are the same, then they are internal to the system. If the public IP address of the first Media Gateway is not the same as the public IP address of the second Media Gateway, the Media Gateway

Controller may select the public IP address of the first Media Gateway and the public IP address of the second Media Gateway for Call Setup. This describes a case when a call session is between an internal IP telephone (e.g., the first Media Gateway), and an external device, such as a telephone, communicating through a Trunking Gateway (e.g., the second Media Gateway). Thus, in one embodiment, the first Media Gateway and the second Media Gateway may each include one of an IP telephone or a Trunking Gateway, where the Trunking Gateway includes an interface to the Public Switched Telephone Network (PSTN).

In one embodiment, the Media Gateway Controller may send the selected IP address of the first Media Gateway to the second Media Gateway, and send the selected IP address of the second Media Gateway to the first Media Gateway. The first Media Gateway may then send data to the second Media Gateway using the selected IP address of the second Media Gateway, and the second Media Gateway may send data to the first Media Gateway using the selected IP address of the first Media Gateway.

In one embodiment, the Media Gateway Controller may register the first and second Media Gateways prior to receiving the Call Setup request, as described above. In one embodiment, registering the Media Gateways may include receiving and storing the public IP address of each Media Gateway. In another embodiment, registering the Media Gateways may also include receiving and storing the private IP address of each Media Gateway.

Thus, various embodiments of the system and method described above may distinguish between call sessions involving two internal IP telephones, and call sessions between an internal IP telephone and a Trunking Gateway, for example, interfacing with an external device, such as an external telephone.

BRIEF DESCRIPTION OF THE DRAWINGS

A better understanding of the present invention can be obtained when the following detailed description of the preferred embodiment is considered in conjunction with the following drawings, in which:

FIG. **1** illustrates an IP telephony system, according to the prior art;

FIG. **2** illustrates an IP telephony system, according to one embodiment of the present invention;

FIG. **3**A is a basic Service Gateway/VPN diagram, according to one embodiment of the present invention;

FIG. **3**B is a diagram of an IP telephony network, according to one embodiment of the present invention;

FIGS. **4**A and **4**B flowchart IP telephone initialization, configuration, and use, according to one embodiment;

FIGS. **5**A and **5**B flowchart a client DHCP lease negotiation process, according to one embodiment;

FIGS. **6**A, **6**B and **6**C flowchart an IP telephone registration process, according to one embodiment of the invention;

FIGS. **7**A, **7**B and **7**C flowchart a Call Setup process, according to one embodiment of the invention;

FIGS. **8**A, **8**B and **8**C flowchart an internal IP telephone to internal IP telephone RTP flow, according to one embodiment of the invention;

FIGS. **9**A, **9**B and **9**C flowchart an IP telephone to Trunking Gateway RTP flow, according to one embodiment of the invention;

FIGS. **10**A and **10**B flowchart an internal IP telephone to external IP telephone RTP flow, according to one embodiment of the invention; and

FIG. **11** flowcharts a solution to the triangle problem, according to one embodiment.

While the invention is susceptible to various modifications and alternative forms, specific embodiments thereof are shown by way of example in the drawings and are herein described in detail. It should be understood, however, that the drawings and detailed description thereto are not intended to limit the invention to the particular form disclosed, but on the contrary, the intention is to cover all modifications, equivalents and alternatives falling within the spirit and scope of the present invention as defined by the appended claims.

DETAILED DESCRIPTION OF THE PREFERRED EMBODIMENTS

FIG. 2—A VoIP System

FIG. **2** illustrates one embodiment of a VoIP system for providing IP telephony services to a business or other organization. The system in FIG. **2** includes one or more IP telephones **120**A and **120**B. As used herein, the terms "IP telephone" and "Media Gateway" are intended to include any telephony or communication device that operates to use a network protocol, such as Internet Protocol (IP). Thus, an IP telephone **120** is a Media Gateway, as is a Trunking Gateway. Said another way, an IP telephone or Media Gateway is a device that receives an analog input and encodes the signal into an IP data stream. This device may also perform the reverse function of taking a signal encoded into an IP data stream and converting it to an analog signal. Although in the preferred embodiment, IP is the network protocol used, use of other network protocols is also contemplated. Note that wireless embodiments of the invention are also contemplated. It should also be noted that in some embodiments of the VoIP system, communications may be mediated between an IP telephone **120** and an IP device, where the IP device may be any device with an interface capable of sending or receiving Internet Protocol packets, including another IP telephone.

As FIG. **2** shows, IP telephones **120**A and **120**B may be coupled to a Service Gateway (SG) **170**. As used herein, the term "Service Gateway" is intended to include any system or device that operates to mediate telecommunications, e.g., telephone calls, between the IP telephones **120** (or other Media Gateways), as well as between the IP telephones **120** and external devices (e.g. IP devices), such as telephones on other networks, Trunking Gateways, or telephones or devices on the PSTN (Public Switched Telephone Network), ISDN (Integrated Services Digital Network), or FDDI (Fiber Distributed Data Interface), among others.

In one embodiment, IP telephone **120**A may also be coupled to IP telephone **120**B. The Service Gateway **170** may be coupled to a Media Gateway Controller (MGC) **150**, as shown. In one embodiment, the IP telephones **120**, the Service Gateway **170**, and the Media Gateway Controller **150** may each include software and/or hardware which implements at least a portion of an embodiment of the present invention. For example, to address the "triangulation" problem described above, the SG **170** may include logic or software which is operable to discern an internal call from one which originates or terminates outside the company's network. Details of this process are described below with reference to FIGS. **3**A–**11**.

In one embodiment, the system may implement a private IP backbone using registered IP addresses to provide a high availability/fault tolerant IP telephony network. The system

may have a scalable design to facilitate rapid growth, and may implement capacity planning to reduce or avoid network congestion. Additionally, the system may have a flexible design to support future applications. For example, it is contemplated that in various embodiments, the system may provide support for substantially all access technologies. The system may further utilize traffic engineering to control data path, bandwidth allocation and latency/jitter, such as QoS (Quality of Service), MPLS (Multiple Protocol Label Switching), RSVP (Resource Reservation Protocol), etc., to provide an efficient, cost effective, high quality IP based telecommunication system.

It is further contemplated that in various embodiments, the system may be used to provide a national, or even international, IP telephony system. The system may partner with local Internet Service Providers (referred to herein as Channel Partners) in each Metropolitan Service Area (MSA) to provide connectivity between the customer and the system through a Point of Presence (PoP), i.e., a termination point for connections to each Channel Partner, and for connections to a local PSTN network.

For example, in one embodiment, the VoIP network components for each MSA may include the Point of Presence (PoP), a Core, or regional aggregation point, and an App, which may include various Soft Switch elements, SS7 gateways, Trunking Gateways, etc. In one embodiment, the App and the Core may be co-located. Further details of the network hardware components are presented below with reference to FIGS. **3**A and **3**B.

FIG. **3**A—Diagram of Basic Service Gateway and VPN

FIG. **3**A is a diagram of one embodiment of the present system, including the Service Gateway **170** and a Virtual Private Network (VPN). As FIG. **3**A shows, at least a portion of the system may be implemented on customer premises **300**. Other aspects of the system may be implemented external to the customer premises **300**, for example, in the system's PoP **350**, as shown.

As indicated in FIG. **3**A, components of the system present on the customer's premises **300** may include one or more IP telephones **120**, such as IP telephones **120**A and **120**B. The IP telephones **120** may each be coupled to Service Gateway **170** through an Ethernet switch **134**A. The Service Gateway may couple to a customer firewall **132** through a second Ethernet switch **134**B, as shown. The customer firewall **132** may couple to a customer router **130** through a third Ethernet switch **134**C.

In one embodiment, the customer router **130** may be operable to couple to Channel Partner **140**, which may provide access to the off-premises components of the system, i.e., the VoIP PoP **350**. As mentioned above, the Channel Partner **140** preferable includes an Internet Service Provider which is operable to provide network access, e.g., Internet access, to the customer. The PoP portion of the system may include a PoP router **138** which is operable to couple to the Channel Partner **140**. The PoP router **138** may couple to a VPN Concentrator **136** through Ethernet switch **134**D. (A concentrator is a type of multiplexor that combines multiple channels onto a single transmission medium in such a way that all the individual channels can be active simultaneously.) Finally, the VPN Concentrator may be coupled to the Media Gateway Controller **150** through Ethernet switch **134**E. It should be noted that the configuration described is an exemplary embodiment, and that other configurations are contemplated. For example, in various embodiments, fewer or more Ethernet switches **134** than shown may be used to implement the system.

As mentioned above, the Service Gateway **170** may include logic and/or software which implements a portion of the system. It should be noted that the SG **170** differs substantially from ALG **70** (prior art). For example, instead of making the SG **170** aware of the higher-level protocols and performing complex decisions, the SG **170** may be used for a modified NAPT function in combination with Dynamic Host Controller Protocol (DHCP) and other services. Embodiments of each major function are detailed below:

Hardware Platform

In one embodiment, the SG **170** may be a small form factor device, or a rack mountable (19" rack) unit, with built-in AC power supply. The SG **170** may provide at least two 10 MBit Ethernet interfaces, preferably 10/100 MBit. The interfaces may support 802.1q VLAN trunking. The unit may also have SNMP management, telnet access, minimum 2 Mbytes of flash memory, and a serial interface for command line access, as desired.

SG Addressing

The SG **170** may use a single, public IP address as the source and destination address for IPSec VPN tunnels. This address may be shared between the active and standby SGs **170**. The SG **170** may use a single, public IP address to provide NAT support for all the internal hosts needing VoIP protocol support. It may be able to use additional NAT addresses to support a large number of internal hosts, e.g., IP telephones **120**. This address may also be shared between the active and standby SGs **170**. For the internal interfaces, the SG **170** must support virtual IP addresses for each VLAN interface.

Routing

As a gateway and VPN device, the SG **170** may support a variety of routing functions. Specifically, support for numerous static routes may be provided (e.g., at least 100). Additional routing protocol support is also contemplated (for example, OSPF and RIP version 2). The SG **170** may be the default gateway for all the IP telephones **120**, therefore it may determine where traffic should be routed, and thus whether it should be NATed (or NAPPTed) and sent out a VPN interface, or routed to an internal physical interface (Ethernet) or logical interface (VLAN).

NAT/NAPT/NAPPT

Instead of dynamically assigning ports to IP telephones, the SG **170** may allocate a range of port numbers for each IP telephone **120** as it acquires its lease during a DHCP process, described below with reference to FIGS. **5**A and **5**B. The SG **170** may maintain a table of semi-permanent mappings of the external IP address and ports to the internal hosts and ports. The SG **170** may continue to replace the internal or private source IP address with the NATed external source IP address. It may not, however, modify the port information, though it may validate it to ensure the correct internal host is using its assigned port range. Such Network Address Translation may be referred to as Network Address Persistent Port Translation (NAPPT).

DHCP

In one embodiment, the SG **170** may provide support for DHCP. The SG **170** may be the DHCP server for those hosts to which it provides SG services. The SG **170** may support multiple scopes for multiple IP subnets (one subnet for each VLAN accessed via the 802.1q trunk). Specifically, via DHCP the SG **170** may perform one or more of the following: assign the IP address and network mask, set the SG **170** as the default gateway, set the DNS domain to the appro-

priate value, set the SG **170** as the TFTP/BOOTP server, provide the path and file name for the boot image, and set the host name.

In one embodiment, the SG **170** may also issue two as yet undefined DHCP options. As they are undefined, they may use the unassigned DHCP Option numbers (**127**–**255**). The SG **170** may assign a range of IP ports to each IP telephone for its own use, and provide the IP address of the soft switch. In one embodiment, the SG **170** may inform the IP telephones **120** which NAT address is being used by the SG **170** for their traffic.

In one embodiment, the DHCP service may also be able to perform MAC-based reservations. For example, it may ensure an IP address is not in use before assigning it (ping verification). As another example, it may be operable to assign addresses only to hosts with a particular client ID (to prevent other hosts from getting addresses). In one embodiment, the SG **170** may ignore DHCP lease requests coming from hosts not within a MAC range. To support redundancy, the DHCP lease information may be synchronized with the standby SG **170** to ensure the integrity of every registration in the event of active SG **170** failure.

Trivial File Transfer Protocol (TFTP)

In one embodiment, the SG **170** may also act as a file transfer server, e.g., a TFTP server. The IP telephones **120** may download software, e.g., initialization software, from the SG **170** when booting, thus, the SG **170** may include memory, e.g., at least 2 Megabytes of flash memory, for storing this initialization software. The flash on the active SG **170** may be automatically or manually copied to the flash of the standby SG **170**.

Virtual Private Network (VPN)

For security of the Call Setup and the calls in progress, as well as to simplify the routing architecture, support for multiple IPSec (IP Security) VPN ESP (Encapsulating Security Payload) Tunnels may be provided, according to one embodiment. The external interface on the SG **170** may be one end of the tunnel, and the VPN Concentrator **136** may be the other end of the tunnel (located at the PoP servicing the customer's city). Furthermore, the ability to maintain a tunnel with a secondary VPN Concentrator **136** and other SGs **170** within the customer's private network may be provided. The external IP address used for the VPN tunnel may be different than the external IP address used for the NAT function. To simplify the routing architecture of the customer solution and the system network, the public IP addresses of the SGs **170** and the VPN Concentrator **136** that the customer uses may be from the same address block allocated to that customer's Internet Service Provider (ISP).

Firewall

Basic firewall functions may be provided as the SG **170** may be placed onto a public network, according to one embodiment. For performance reasons, one or more of stateful inspection, denial of service protection, intrusion detection and packet filtering may be performed at line speed.

Quality of Service (QoS)

In one embodiment, to ensure the a high level of performance within the network infrastructure of the customer's network and the customer's service provider, the SG **170** may maintain Type of Service (TOS) settings in any IP headers traversing the device, and may "mark" all IPSec traffic exiting the device with a TOS or Differentiated Services (DiffServ) setting, thereby helping to prioritize SG traffic over other traffic on the network.

Redundancy

Additionally, full redundancy for each function that the SG **170** performs may be provided, according to one embodiment. In the background, the primary SG **170** may maintain a connection state table for all NAT sessions, DHCP leases, and VPN tunnels. This function may be performed via a direct Ethernet connection, or over the internal network interfaces. The use of gratuitous ARP (Address Resolution Protocol) may be used on the local interfaces in the event of fail-over to keep its IP addresses reachable.

Additional Features:

Some additional features that are also contemplated include: support for CRTP (Compressed Real Time Protocol), a 19" rack mountable form factor, a larger number of Ethernet interfaces, an integrated modem, RSVP support, and MPLS support, among others.

SG Features Summary

A summary of features of the Service Gateway **170** is presented below. It should be noted that the feature list is exemplary, and is not intended to limit the feature set of the Service Gateway **170**. Rather, it is contemplated that in various embodiments, the flexibility of the system design may facilitate different or additional features to provide advanced and future IP based telecommunication services as the related technologies develop.

Service Gateway (SG) Features:

Performance:

Wire-rate performance, total latency through the unit less than 5 msIPSec

Tunnels

Support for 20+, wire-speed 3-DES IPSec tunnels

Unique IP address for each tunnel

Firewall:

Stateful inspection

Source/destination IP address

Source/destination port

Denial of Service protection

IP Routing:

Static routes (100+)

OSPF

RIP v.2

Routing across tunnels

High Availability:

Optional

Support for clustering or load balancing

OR Support for an active/standby configuration

Redundancy, extremely fast fail-over

Connection State Transfer between HA peers for all features (NAPT, DHCP, etc.)

Interface Support:

Support for 10 Mb Ethernet, 100 Mb Ethernet, full duplex

Support for 802.1q and 802.1p for "outside" and "inside" interfaces

Port Translation:

Virtual IP addresses

Provide basic NAT translation (private to public IP) without changing port number

Support multiple NAT addresses

Perform NAT function before encrypting with IPSec and

Forwarding NAT/NAPT "before" VPN

Maintain persistent port mappings between internal hosts and assigned ports

DHCP Service:
Standard features:
- Permanent lease with updates
- IP address
- Mask
- Default gateway
- Domain name
- Host name
- DNS server
- Validate address before assigning
- MAC based reservations
- Boot file name
- Boot file location

Options:
- Assign port ranges for host, reserved in NAPT table
- Assign soft switch address
- DHCP table synchronization with standby device

Additional DHCP Features:
Support multiple scopes and super-scopes
Support for MAC-based reservations
Support leasing based on class identifier (ignore requests from non-phones)
Issue leases based on client identifier (Ignore requests from non-phones)
Support standard DHCP options:
- Option 1 (Subnet Mask)
- Option 3 (Router Option)
- Option 4 (Time Server Option)
- Option 13 (Boot File Size Option)
- Option 17 (Root Path)
- Option 50 (Requested IP Address)
- Option 54 (Server Identifier)
- Option 66 (TFTP Server Name)
- Option 43 (Vendor Specific Information)
- Vendor Specific Options:
  - Assign unique port ranges to DHCP clients
  - Assign primary/backup MGC IP address
  - Assign NAT address

Traffic Engineering:
QoS/ToS
Integrity of TOS bits in host traffic maintained
Setting of TOS bits for IPSec traffic
RSVP
MPLS
Rate Limiting/Queuing
TFTP Service:
Support TFTP service, TFTP server
Storage for many images (30–100 MB)
Support reading and writing from IP telephones
Support for error logging from IP telephones
Management:
Basic SNMP
Tunnel specific MIBs
Telnet
Serial interface
Other SG Features:
VPN (IPSec, 3DES, manual keys, hardware encryption/decryption, ESP tunnels)
Multiple simultaneous VPN tunnel terminations at wire speed (3+tunnels)
CRTP support
BOOTP/TFTP
Minimum 2 MB free of flash
SNMP management
Telnet Access
Serial Interface
2×10/100 Mb Ethernet interfaces
Rack-mountable (19") preferable

The VoIP IP Telephone

In one embodiment, the internal hosts, or IP telephones, may use a private IP address assigned by the SG DHCP service in the normal fashion for all IP headers. Note that as used herein, the term "private IP address" refers to IP addresses in the ranges described in the Internet Engineering Task Force's (IETF) Request for Comment (RFC) **1918**, as well as any IP addresses that have not been assigned by any Regional Internet Registry to the organization using the addresses. It should also be noted that as used herein, the term "public IP address" refers to any IP addresses assigned by any Regional Internet Registry to the organization using the addresses.

Each IP telephone **120** may use the port numbers assigned to it by the SG **170** as a part of the DHCP process. When requesting a DHCP lease, the IP telephone **120** may specify a client identifier to differentiate itself from other hosts on the network. The IP telephone **120** may also know the public IP address to which all its traffic is being NATed, so that the IP telephone **120** may inform the soft switch during the registration process, described below.

The Soft Switch

In one embodiment, the "soft switch" is actually a group of systems running many applications to perform a variety of functions. For example, the part of the soft switch that handles the interaction between the IP telephones **120** and the soft switch is referred to herein as the Media Gateway Controller (MGC) **150** (from the term used in the MEGACO standard for that interaction). The MGC **150**, outside of its standard functions, may perform one or more special tasks in order to properly interoperate with the IP telephones **120** and SG **170**. An example of such a special task is described for an embodiment which uses the MEGACO protocol: when an IP telephone **120** registers with the MGC **150**, the MGC **150** may store the private address of the IP telephone **120** provided in the MEGACO header, as well as the NATed IP address used by the SG **170** in the IP header; or, the IP telephone **120** may pass that information along during registration. The MGC **150** may use this information to determine what IP address (public or private) needs to be conveyed to the call parties, and may be particularly useful in distinguishing between Call Setup requests for two IP telephones **120** on the same internal network, or for IP telephones on different networks. In the event that the IP telephones **120** are on the same customer premises **300**, but operating through two different SGs **170**, the RTP session may be directed to use public addresses.

VPN Concentrator

At the PoP, the VPN Concentrator may terminate the other end of the VPN tunnel initiated from the SG **170**. This device may be operable to handle at least 1000 IPSec, 3DES, ESP tunnels at wire speed, and may also support basic routing and firewall functions like the SG **170**, as well as 802.1q/p. The VPN Concentrator **136** may also provide a highly available solution where failure of an active device does not result in the tear-down of all existing tunnels. In the event this is not technically feasible, then each SG **170** may maintain two active VPN tunnels at all times.

Basic VPN Concentrator Feature Summary

A summary of features of the VPN Concentrator **136** is presented below. It should be noted that the feature list is exemplary, and is not intended to limit the contemplated feature set of the VPN Concentrator **136**. Rather, it is contemplated that the flexibility of the system design may

facilitate additional features to provide advanced and future IP based telecommunication services as the related technologies develop.

VPN Concentrator features:
- Firewall
- Source/destination IP address
- Source/destination port
- Denial of Service protection
- IP Routing
- Static routes (1000+)
- OSPF
- Routing across tunnels
- High Availability
- Support for clustering or load balancing
- OR Support for an active/standby configuration
- Redundancy, extremely fast fail-over
- Connection State Transfer between HA peers
- Interface Support
- Support for 100 Mb Ethernet, Gigabit Ethernet, full duplex
- Support for 802.1q and 802.1p for "outside" and "inside" interfaces
- Traffic Engineering
- QoS/ToS
- RSVP
- MPLS
- Rate Limiting/Queuing
- IPSec Tunnels
- Support for 1000+, wire-speed 3-DES IPSec tunnels
- Unique IP address for each tunnel
- Other Features:
- CRTP support
- Multiple simultaneous VPN tunnel terminations at wire speed (1000 tunnels+)
- Multiple VPN destination addresses
- VPN Concentrator management features:
- Basic SNMP
- Tunnel specific MIBs
- Telnet
- Serial interface
- Centralized management
- Centralized provisioning
- Global key management

Customer Firewall

In one embodiment, for security purposes, a customer firewall **132** may reside on the customer premises, separating the customer's internal network from external systems. The firewall **132** at the customer premises may be operable to support certain features in order to work in conjunction with the SG **170**. If the firewall **132** does not support these features, then the SG **170** may be deployed in parallel with the firewall **132**, rather than behind it.

Because the SG **170** may be participating in an IPSec session, it may source its IP packets with a public IP address and have its IP packets remain unmodified as they pass through the firewall **132**. This includes no changes to the IP header in any way, as any changes to the header may cause the IPSec traffic to be discarded by the VPN device at the other end.

The features described above for each device in the system may provide an efficient and flexible solution for VoIP telephony. Furthermore, various embodiments of the system may include an architecture that provides solutions for a number of problems related to the implementation of the system in the customer environment.

The issue of unattainable addresses may be addressed by using a NAPT technology, as is well known in the art. Using a small number of routable addresses for each SG **170** is a reasonable and justifiable approach which is consonant with the goals and methods of ARIN (American Registry for Internet Numbers). The use of VPN technologies and the use of the SG **170** as the default gateway for all the IP telephones **120** may simplify the routing architecture of the VoIP solution. The problem of supporting application layer protocols that use UDP, multiple and sequential port numbers, and sessions initiated from outside the network may be addressed by the SG **170**. The perpetual NAPT table maintained by the SG **170** may solve the traditional problem of dynamic port numbers. The "triangulation" problem mentioned above may be solved by the intelligence in the soft switch, in combination with port range allocation and the NAPPT process. By implementing a DHCP solution dedicated to the VoIP network, the customer's and service providers network DHCP resources (which may be of questionable reliability) may not be needed.

A number of specific problems related to VoIP telephony are described below, as well as possible corresponding solutions provided by various embodiments of the present invention. It should be noted that various embodiments of the present invention may each address none, a portion of, or all of the problems listed below.

Routing Problems

Problem: it is desired that application traffic leaving the customer premise take a predictable path, preferably the shortest path across the Channel Partner's network, with low latency and jitter. This may be a challenge because:

1) QoS technologies vary greatly in different service provider networks;

2) Channel Partners (ISPs) typically will not accept hundreds of small route advertisements needed to advertise (/32, /30, /29, etc.);

3) The system cannot act as a transit connection between various service providers;

4) Therefore the system cannot run BGP with the Channel Partners.

Routing Solutions

1) Acquire small public IP block from each channel partner for addressing interfaces for PoP routers;

2) Place Service Gateway at customer premise for use as default gateway for IP telephones;

3) Utilize VPN technology to tunnel MEGACO and RTP traffic across customer/channel partner networks;

4) Use Channel Partner IP addresses on the VPN Concentrator to ensure traffic stays on Channel Partner network;

5) Negotiate service guarantees for VPN traffic (source/destination address) from Channel Partners via appropriate traffic engineering technology for their network.

Firewall Problems

Current firewall products do not support the protocols employed by the system, i.e. MEGACO, RTP, RTCP The basic issues are:

1) NAPT is necessary for IP address conservation (ARIN won't provide registered IP address for IP telephones);

2) The IP/port information is in the payload;

3) These protocols use multiple UDP ports;

4) Firewalls do not support UDP sessions well;

5) UDP sessions are initiated from the outside/untrusted network;

6) IP telephones register their IP and port numbers, expecting them to be persistent;

7) NAPT performs dynamic allocation of ports.

Firewall Solutions

1) Bypass customer router entirely; or

2) Tunnel VPN traffic through customer firewall; this provides small "hole" in the firewall (TCP session, limited source/destination pairs), and hides all unsupported protocols from the firewall;

3) Perform NAPT function prior to encryption, so the firewall is simply routing the traffic through.

FIG. 3B—Diagram of IP Telephone to IP Telephone Network

FIG. 3B is a diagram of a VoIP network providing for communication between IP telephones **120** of two different LANs, i.e., between IP telephones on different customer premises. The system illustrated in FIG. 3B is effectively a bilateral implementation of the system described above with reference to FIG. 3A.

As FIG. 3B shows, IP telephones **120**A and **120**B may be coupled to SG **170**A, which may in turn be coupled to customer firewall **132**A. The customer firewall **132**A may be coupled to customer router **130**A through which access to Channel Partner (ISP) **170**A may be provided. Thus, for a customer A, the on-site components of the VoIP system may include the IP telephones **120**, the SG **170**A, the firewall **130**A, and the router **130**A, as well as other support equipment, such as one or more Ethernet switches (not shown), etc.

In one embodiment, a corresponding set of components may be present on a customer B's premises, as shown. Specifically, IP telephones **120**C and **120**D, SG **170**B, firewall **130**B, and router **130**B, coupled together as described above, wherein the customer router **130**B may be coupled to Channel Partner (ISP) **140**B.

Each customer's Channel Partner may be coupled to respective PoP routers **330**, which may provide access to the system PoP components. More specifically, the PoP router **330** coupled to Channel Partner **140**A may couple to VPN Concentrator **136**A and Trunking Gateway **160**A. The PoP router **330** may further couple to Media Gate Controller **150** via another PoP router **330**, thereby communicatively coupling IP telephones **120**A and **120**B to the system PoP components for customer A. Similarly, the PoP router **330** coupled to Channel Partner **140**B may couple to VPN Concentrator **136**B and Trunking Gateway **160**B. The PoP router **330** may further couple to Media Gate Controller **150** via the PoP router **330**, thereby communicatively coupling IP telephones **120**C and **120**D to the system PoP components for customer B.

FIGS. 4A and 4B—IP Telephone Initialization Configuration and Use

FIGS. 4A and 4B are flowchart diagrams that illustrate initialization, configuration, and use of an IP telephone **120** (or other Media Gateway) according to one embodiment of the present invention. It is noted that FIGS. 4A and 4B illustrate one embodiment, and that configuration and operation of the IP telephone **120** may be performed using various other methods according to the invention as desired. It is further noted that various of the steps shown may be performed in different orders or omitted, or various additional steps may be performed as desired.

FIG. 4A flowcharts a high level IP telephony process. As shown, in step **402** the IP telephone **120** may be powered on, i.e., activated. Step **402** may occur when the IP telephone **120** is initially installed at the client location, i.e., when it is first installed and powered on. Alternately, step **402** may be performed periodically, i.e., each morning when the user powers on the IP telephone **120**. In one embodiment, the activation of the IP telephone may be performed programmatically by software executing on the IP telephone, an external system coupled to the IP telephone, or both.

In step **404** client DHCP lease negotiations may be performed. According to one embodiment, in step **404** the IP telephone **120** may contact the Service Gateway **170** requesting a DHCP assigned IP address. In response, the client DHCP lease negotiations may be performed in step **404**, where, as part of the DHCP lease negotiations, the Service Gateway **170** may perform a TFTP transfer to the IP telephone **120** to initialize the IP telephone **120**. This may involve transferring boot and/or configuration data to a memory, e.g., an EEPROM, located on the IP telephone **120** to configure or boot the IP telephone **120**. In one embodiment, the TFTP process may include first booting the IP telephone, then loading an application which is executable to perform IP telephony. The client DHCP lease negotiations performed in step **404** are described in detail in the flowchart of FIGS. 5A and 5B.

In step **406** the Media Gateway Controller (MGC) **150** and the IP telephone **120** may perform IP telephone **120** registration. This may involve registering the IP telephone **120** with the MGC **150**, and may include transmitting registration information between the MGC **150** and the IP telephone **120**. One embodiment of the IP telephone registration process utilizing the MEGACO standard is described in more detail below with respect to the flowchart of FIGS. 6A, 6B, and 6C.

In step **408** the user may login to the IP telephone **120**. It is noted that user login may be optional, and further that the user login may actually be performed prior to the IP telephone registration in step **408**. After the user has logged in and provided any necessary password, then the IP telephone **120** may be ready for operation or use. Thus, in step **410** the user may place and receive calls using the IP telephone **120**, where the system, e.g., the SG **170**, may mediate IP communications between the IP telephone and an IP device, and where the IP telephone uses at least a subset of the range of port numbers to send or receive the IP communications.

FIG. 4B flowcharts one embodiment of the process described above with reference to FIG. 4A in greater detail. As FIG. 4B shows, in **402**, as described above, the IP telephone may be powered on, then in **404** the DHCP/TFTP process may be performed. In one embodiment, the system, e.g., the Service Gateway **170**, may receive an identifier from the IP telephone **120**. In one embodiment, the identifier may include a Vendor Class ID. The SG **170** may then determine if the identifier is valid, and if the identifier is valid, assign a range of port numbers to the IP telephone **120** based on the identifier. The IP telephone **120** may then use at least a subset of the range of port numbers to send or receive IP communications. In one embodiment, the system may also receive a MAC ID for the IP telephone, and if the system determines that the MAC ID is valid, the system may then determine if the IP telephone identifier is valid. In **452**, more details of the DHCP/TFTP process **404** are shown.

As indicated in **452**, in one embodiment, the system may provide DHCP lease information, port range allocation, and Media Gateway Controller (MGC) information, e.g., an MGC address, to the IP telephone **120** based on the identifier, e.g., the Vendor Class ID.

In one embodiment, the identifier of the IP telephone **120** may be included in a DHCP discover message issued by the IP telephone **120** to the SG **170**, in which case the SG **170** may respond with a DHCP offer to the IP telephone (if the

identifier is determined to be valid), where the DHCP offer may include DHCP lease information based on the validated identifier. The IP telephone **120** may then issue a DHCP request in response to the issued DHCP offer. The SG **170** and the IP telephone **120** may each then store the DHCP lease information, and the IP telephone **120** may enable DHCP settings included in the DHCP lease information. In one embodiment, the DHCP lease information may include the range of port numbers, as well as information indicating operational software for the IP telephone **120**. The IP telephone **120** may then execute the indicated operational software to enable the IP communications. In another embodiment, the IP telephone **120** may issue a request for the indicated operational software, for example, by issuing a read request to a file transfer server, such as a Trivial File Transfer Protocol (TFTP) server. The file transfer server may provide the operational software to the IP telephone **120** in response to the request, and the IP telephone **120** may then execute the operational software to enable the IP communications.

It should be noted that the port allocation preferably includes assigning a range of ports to the IP telephone **120** rather than a single port, with the port range depending upon the identifier of the IP telephone **120**, e.g., the Vendor Class ID. For example, an IP telephone **120** capable of using multiple telephone lines may be assigned a greater range of ports than a single line IP telephone. In one embodiment, two ports may be assigned for each two-way communication channel—one port for incoming information, and one for outgoing information. Additional ports may be assigned for other services, such as paging, etc., such that a wide variety of digital telecommunication services may be provided over the same infrastructure, including future digital telecommunication services not currently defined or in use. In one embodiment, the range of port numbers assigned to the IP telephone **120** may include ports which are not reserved for use by other IP protocols, such as FTP, HTTP, etc., by the Internet Engineering Task Force (IETF).

As described above with reference to FIG. **4**A **404**, the method may further include downloading initialization information to the IP telephone **120** via TFTP.

In **406**, client registration may be performed, as explained in greater detail in **462**–**466**. In **462**, the IP telephone **120** may register with the MGC **150** using the assigned port range received from the DHCP lease of **404** above. Note that the IP telephone **120** may contact the MGC **150** using the MGC information (e.g., an address of the MGC **150**) provided in **452** above. Then, in **464** the Service Gateway **170** (as a NAT service) may change the IP source address, e.g., from private to public, but leave the port information unmodified. In **466**, the MGC **150** may register the IP telephone **120** using public IP and port information of the IP telephone, i.e., registration information of the IP telephone. In one embodiment, the registration information may also include private IP information of the IP telephone. In other words, the MGC **150** may also use private IP information (e.g., the private IP address) of the IP telephone to register the IP telephone. It should be noted that in one embodiment, the MGC **150** may store the received registration information for use in Call Setup, described below.

It should be noted that in one embodiment the process described in **480**–**494** below substantially describes the process described in **408** and **410** of FIG. **4**A, wherein a user optionally logs in to the system, then places or receives telephone calls. In **480**, a Call Setup process may be performed. In particular, in **482** the IP telephone **120** may initiate a call via MEGACO signaling to the MGC **150** using the assigned port range and MGC address received from the DHCP lease in **404** above. In **484** the Service Gateway **170** (as a NAT service) may change the IP source address, e.g., from private to public, but leave the port information unmodified. Then, in **486** the MGC **150** may signal the call destination, e.g., an IP device, using public IP, private IP, and/or port information.

In **490**, RTP flow related to the IP telephone call may be managed. For example, as indicated in **492**, in one embodiment, the IP telephones may exchange RTP using one or more ports from the assigned port range received from the DHCP lease of **404** above. Then, as described above in **464** and **484**, in **494**, the Service Gateway **170** (as a NAT service) may change the IP source address, e.g., from private to public, leaving the port information unmodified. More specifically, the SG **170** may receive a data packet from the IP telephone **120**, perform a network address persistent port translation (NAPPT) on the data packet, and send the NAPPTed data packet to a destination IP device. As mentioned above, the data packet may include a private source IP address of the IP telephone **120**, a source port number (from the IP telephone's assigned range of port numbers), and destination information associated with the IP device. In one embodiment, performing a NAPPT on the data packet may include changing the private source IP address to a public source IP address while leaving the source port number unchanged, and where the public source IP address and the source port number may be used to uniquely identify the IP telephone **120**.

Conversely, when the SG **170** receives a data packet from the IP device destined for the IP telephone **120**, the data packet may include a public destination IP address, a destination port number; and source information associated with the IP device, where the destination port number is in the assigned range of port numbers for the IP telephone **120**. In one embodiment, the public destination IP address and the destination port number may be used to uniquely identify the IP telephone **120**. Performing a NAPPT on the data packet may include using the public destination IP address and the destination port number to uniquely identify the IP telephone **120**, and changing the public destination IP address to a private destination IP address while leaving the destination port number unchanged. Note that in this embodiment, the private IP address may be an IP address of the IP telephone **120**. After NAPPTing the data packet, the SG **170** may send the data packet to the IP telephone **120**.

Thus, in the above process, the SG **170** may facilitate and mediate the IP telephony process by assigning a range of ports to a client IP telephone, and by NAPPTing packet IP source/destination addresses while leaving the corresponding port information unchanged. These features may allow for a great deal of flexibility and future expansion of the system, while addressing the "triangle" problem of distinguishing between internal and external IP telephone connections.

Each of these sub-processes is described in greater detail below with reference to FIGS. **5**A–**10**B.

FIGS. **5**A and **5**B—Client DHCP Lease Negotiations

FIGS. **5**A and **5**B illustrates one embodiment of client DHCP lease negotiations performed in **404** above, according to one embodiment of the invention. It is noted that FIGS. **5**A and **5**B illustrate one exemplary embodiment of these lease negotiations, and that these negotiations may be performed in various manners according to the present invention. It is further noted that various of the steps shown may

be performed in different orders or omitted, or various additional steps may be performed as desired.

As shown, in step **502** the client IP telephone **120** may begin execution of a boot application. This may involve beginning execution of an application stored on a memory on the IP telephone **120** such as an EEPROM.

In step **504** the IP telephone **120** may determine if an IP address or IP information has been statically assigned. If IP information has been statically assigned as determined in step **504**, then operation may proceed to step **542**, described below. If IP information is determined to not be statically assigned in step **504**, then in step **506** the client IP telephone **120** may issue a DHCP discover command, including a class identifier, e.g., a Vendor Class Identifier. This DHCP discover request operates to request a DHCP dynamically assigned IP address.

In step **508** the server, e.g., the Service Gateway **170**, may receive the DHCP discover command. In step **510** the Service Gateway **170** may determine if the Mac ID of the IP telephone **120** is valid. If not, then operation may proceed to step **534**, described below. If the Mac ID is determined to be valid in step **510** then in step **512** the Service Gateway **170** may determine if the identifier, e.g., the Vendor Class ID, is valid. If the Vendor Class ID is not valid then operation may proceed to step **532**, described below.

If the Vendor Class ID is determined to be valid in step **512**, then in step **514** the server, i.e., the Service Gateway **170** may issue a DHCP offer with lease information. In step **516** the client may receive the DHCP offer. As described above, in one embodiment, the DHCP offer may include DHCP lease information for the IP telephone **120**.

In step **518** the IP telephone **120** may determine whether the lease contains all the necessary options for operation of the IP telephone **120**. If the lease is determined to not contain all the necessary options as determined in step **518**, then in step **520** the IP telephone **120** may ignore the DHCP offer and operation may proceed to step **538**.

In step **538** the IP telephone **120** may wait for a period of time, e.g., a wait interval, and then reissue a DHCP discover command with Vendor Class ID in step **506**, and the above operation may repeat.

If the MAC ID is determined to not be valid in step **510**, then in step **534** the Service Gateway **170** may ignore the DHCP discover command, i.e., no DHCP offer may be provided, and in **536** the client may not receive any DHCP offer.

If the Vendor Class ID is determined to not be valid in step **512**, then in step **532** the Service Gateway **170** may ignore the DHCP discover command and in step **536** the client accordingly may not receive any DHCP offer. In either instance after any of steps **532** or **536**, if the IP telephone **120** does not receive a DHCP offer after a certain period of time, i.e., after the wait interval in step **538**, then in step **506** the client may reissue a DHCP discover command with the Vendor Class ID, and the above operation may repeat.

If in step **518** the IP telephone **120** determines that the lease does contain all the necessary options, then in step **522** the client may issue a DHCP request. After issuing the DHCP request in step **522**, the operation may proceed to step **562** of the flowchart, described below.

If in step **504** the client IP telephone **120** determines that the IP information is statically assigned, then operation may proceed to step **542**. As shown, in step **542** the client IP telephone **120** may determine whether the boot image is local, i.e., if the operational software for the IP telephone is stored locally. If the boot image is determined to be local in step **542**, then in step **590** the client may execute the boot image to boot up the IP telephone, and then termination may occur wherein the operation completes.

If the boot image is determined to not be local in step **542**, then in step **544** the client may begin Trivial File Transfer Protocol (TFTP) activity. In step **546** the client may issue a RRQ (e.g., a read request) to a TFTP server preferably using the address supplied by the DHCP. In step **548** the TFTP server may receive the RRQ (opcode **1**). In step **550** the TFTP server may determine if the file is in the local flash. If so, then in step **552** the TFTP server may issue an acknowledge to the client IP telephone **120** (opcode **4**) and in step **554** the client IP telephone **120** may store the image in memory. In other words, in step **554** the TFTP server may transfer the image to the client IP telephone, and the client IP telephone **120** may store this image in the memory.

In step **556** the client IP telephone **120** may determine whether the transfer has finished or completed. If so, then the client IP telephone **120** may execute the boot image received and stored in step **554**, and operation may terminate or complete.

If the IP telephone **120** determines that the transfer has not completed in step **556**, then operation may proceed to step **582**. In step **582** if the TFTP has been attempted more than some other specified threshold (e.g., four times), then the client IP telephone **120** may error out of TFTP activity in step **584** and operation may proceed to step **502**. If TFTP transfer has not been attempted more than four times, then operation may proceed to step **546**, and the above operations may repeat.

If the TFTP server determines that the file is not in the local flash in step **550**, then in step **580** the TFTP server may issue a file not found error to the client IP telephone **120** (output **5** error code **1**) and operation may proceed to step **582**.

After the client issues the DHCP request in step **522**, then operation may proceed to step **562** as noted above. In step **562** the server may receive the DHCP request. In step **564** the server may store the lease in persistent data, i.e., store the lease in a nonvolatile memory on the server. In step **566** the server may issue a DHCP acknowledge (DHCP ACK). In step **568** the client may receive the DHCP acknowledge. In step **570** the client may store the lease information received from the server. In step **572** the client may enable the lease values (i.e., DHCP settings) received. In step **574** the client may ignore any further DHCP acknowledges and operation may proceed to step **542**. The lease information in step **570** may include a private IP address and other lease information which enables operation of the IP telephone **120** on the local network of the client system.

Thus, in the DHCP lease negotiation and registration, the IP telephone may be assigned a range of ports for use, depending upon the IP telephone's Vendor Class ID. For example, an IP telephone capable of using multiple telephone lines may be assigned a greater range of ports than a single line IP telephone. In the preferred embodiment, two ports are assigned for each two-way communication channel—one port for incoming information, and one for outgoing information. Additional ports may be assigned for other services, such as paging, etc., such that a wide variety of digital telecommunication services may be provided over the same infrastructure. The system may distinguish between internal call connections and external call connections by examining the information associated with the IP telephone(s) involved with the call.

FIGS. **6**A, **6**B and **6**C—IP Telephone Registration Process

FIGS. **6**A, **6**B and **6**C flowchart the IP telephone registration process of **406** described with reference to FIGS. **4**A and **4**B above, according to one embodiment. This particular embodiment uses the MEGACO standard, although other protocols and standards may be implemented as desired. It is further noted that various of the steps shown may be performed in different orders or omitted, or various additional steps may be performed as desired.

As shown, after the DHCP/TFPP process **404** is completed, then in step **602** the client may begin the registration process.

In step **604** the system may determine if an IP port is available for registration. If an IP port is not available for registration then in step **606** the registration may fail and the process may terminate.

If an IP port is available for registration then in step **608** the system may determine if the Media Gateway Controller address is provided by DHCP. If the MGC address was not provided by DHCP then again in step **606** the registration may fail and the process may terminate.

If the MGC address was provided by DHCP then in step **610** the client may select a port number for MEGACO. Then in step **612** the client may select a primary MGC address to register.

In step **614** the client may transmit a Service Change command to the MGC **150**. An example packet header is shown as part of **614**, comprising a source IP address, denoted as Private, a source port, selected from the assigned port range as indicated, a destination IP address, here shown as the Primary MGC address, and a destination port, here shown with an arbitrary example value of 55555. In step **616** the Service Gateway (SG) **170** may receive the request. Then in step **618** the system, e.g., the SG, may determine if the IP destination is internal or external, i.e., remote.

If the IP destination is determined to be internal then in step **620** the data (packet) may be forwarded out the local interface, and in step **622** the packet may be dropped.

In step **624** the telephone may time out on the request. Then in step **626** the system may determine if use of a secondary MGC address has been attempted, and if a secondary has been attempted then in step **606** the registration may fail and the process may terminate. If a secondary has not been attempted then in step **628** the client may select a secondary MGC address to register and the process may continue again at step **614** as described above.

Referring back to step **618**, if the IP destination is determined to be external, then in step **634** the Service Gateway **170** may select a destination tunnel based on the destination IP address. Then in step **636** the system may determine if the selected tunnel is operational. If the tunnel is not operational then in step **622** the packet may be dropped and the process may continue with step **624** as previously described.

If the tunnel is operational then in step **638** the Service Gateway **170** may perform Network Address Persistent Port Translation or NAPPT. As indicated, the packet header information at this stage may change in the following way: the source IP address may be changed from Private to Public, while the source port remains UNCHANGED; the destination IP address remains set to the primary MGC address; and the destination port retains the example value 55555.

Then in step **640** the Service Gateway **170** may perform IP security encryption on the packet. As shown, the original packet is encapsulated in a new packet with a source address of the external interface address of the Service Gateway, and the destination address of the VPN Concentrator. The Service Gateway **170** may forward the data (packet) over the selected tunnel.

In step **646** the traffic may traverse the channel partner network, i.e., the network provided by an Internet Service Provider (ISP). After the data traffic (packet) has traversed the channel partner network then in step **648** the data traffic may reach a virtual private network concentrator or VPN Concentrator **136**.

In step **650**, the VPN Concentrator **136** may decrypt the data traffic, and, as shown in step **652**, may route the data traffic to a local router. As shown, in one embodiment, the data packet header information at this point may include a source IP address, indicated as Public, a source port which remains UNCHANGED, as shown, a destination IP address set to the primary address of the MGC, and a destination port with the example value of 55555.

In step **654** the local router may forward the data traffic to the MGC **150**, then, in step **656** the system may determine if the MGC **150** receives the data, i.e., responds to Address Resolution Protocol (ARP). If the MGC **150** does not receive the data then the process may drop the packet in step **622**, and continue as described above.

If the MGC **150** does receive the packet, i.e., does respond to the ARP, then in step **658** the MGC **150** may process the registration. In step **660** the MGC **150** may store the information in response to the registration. One example of the stored information is shown as part of **660**, comprising the IP telephone IP address, denoted as SG Public, referring to the Service Gateway's public IP address for the telephone **120**, the MEGACO port, indicated here as UNCHANGED, and the SG IP, indicated as SG Public.

In step **662** the MGC **150** may reply with a Service Change. This may involve sending a packet back to the source IP telephone, and so, as **662** shows, in one embodiment, the packet header for the data now may now include the source IP address and port set to the Primary MGC address and the example value 55555, i.e., the prior packet's destination information described in **614** above. As indicated, the destination information may include the destination IP address set to the SG public address, and the destination port remaining UNCHANGED. In step **664** a local router may forward the traffic to the VPN Concentrator **136**. In step **666** the VPN Concentrator **136** may perform IP security encryption. In step **668** the VPN Concentrator **136** may route the data to another local router. Then in step **670** the data may traverse the channel partner network, i.e., the network provided by the ISP.

In step **672** the data may reach the Service Gateway **170**. The Service Gateway **170** may then decrypt the data as indicated in step **674**. In step **676** the Service Gateway **170** may then perform Network Address Persistent Port Translation (NAPPT). As step **676** shows, the packet header information may be modified such that the source IP address is set to the primary MGC address, the source port is set to the example value 55555, the destination IP address is changed from Public to Private, and the destination port remains UNCHANGED. Then in step **678** the SG may forward the data out through the local interface.

In step **680** the system may determine of the telephone responds to the address resolution protocol, i.e., may determine if the telephone receives the data. If the telephone does not receive the data, then the process may proceed with step **624**, described above. If the telephone does receive the data, then in step **682** the telephone **120** may process the registration.

In step **684** the system may determine if the registration information is valid. If the registration information is invalid, then the registration may fail, as indicated in **606**, and the process may terminate.

If the registration information is valid, then in step **686** MEGACO registration process exchange continues until the data exchange is complete. The process may then terminate, as shown.

Thus, the Service Gateway **170** may mediate a remote registration process between a client using an IP telephone **120** and a Media Gateway Controller **150** which performs the registration.

One of the benefits of the present system is that the customer's system components may be configured and/or reconfigured remotely by downloading new software from the system, i.e., complex on-site servicing for service upgrades or modifications may be reduced or eliminated by the present system and method.

FIGS. **7**A, **7**B and **7**C—IP Telephone Client Call Setup Process

FIGS. **7**A, **7**B and **7**C flowchart a client Call Setup process, according to one embodiment of the invention. As shown, the Call Setup process preferably occurs after the DHCP/TFTP process **404** and the client registration process **406**, described above. It should be noted that this particular embodiment uses the MEGACO standard, although other protocols and standards may be implemented as desired. It is further noted that various of the steps shown may be performed in different orders or omitted, or various additional steps may be performed as desired.

In step **702**, the client call may begin. In the preferred embodiment, the call may be initiated by a client activating the IP telephone **120**, e.g., by picking up the receiver, and dialing a destination telephone number.

In step **704**, the system may determine if an IP port is available for MEGACO, and if an IP port is not available, then in step **706** the Call Setup may fail and the process may terminate.

If an IP port is available, then in **708** the system may determine if a Media Gateway Controller (MGC) address was provided by DHCP. If the MGC address was not provided, then the Call Setup may fail, as indicated in step **706**, and the process may terminate.

If the MGC address was provided by DHCP, then in step **710** the client may select a port number for MEGACO signaling. In the preferred embodiment, the port number may be selected from the range of port numbers assigned to the IP telephone client in the DHCP lease negotiation process **404**, as described above with reference to FIGS. **5**A and **5**B.

In step **712** the client may select a primary MGC address to contact, and in step **714**, may transmit a Service Change command to the MGC **150**. An example packet header is shown as part of **714**, comprising a source IP address, denoted as Private, a source port, selected from the assigned port range, as indicated, a destination IP address, here shown as the Primary MGC address, and a destination port, here shown with an arbitrary example value of 55555.

In step **716** the Service Gateway (SG) **170** may receive the Service Change command or request. Then, in **718**, the SG **170** may determine if the IP destination is local or remote. The terms "local" and "remote" refer to call destinations in the customer network which are inside, or outside, respectively, of the originating IP telephone's IP subnet. In other words, if the destination is local, then the call may be sent directly to the destination IP telephone **120**, without having to be transmitted through a Service Gateway **170**.

If the IP destination is local, then in step **720** Call Setup data may be forwarded out the local interface, and in step **722**, the packet may be dropped. Then, in step **724**, after a suitable waiting period, the IP telephone **120** may time out on the request.

After the IP telephone 120 times out on the request, then in **726** the system may determine if a secondary has been attempted, i.e., if a secondary MGC address has been tried.

If a secondary MGC address has been attempted, then the Call Setup may fail, as indicated in step **706**, and the process may terminate.

If a secondary MGC address has not been attempted, then in **728** the client may select a secondary MGC address to contact, and the process may continue with step **714**, as described above.

Referring back to step **718**, if the IP destination is determined to be remote, then in **734** the Service Gateway **170** may select a destination tunnel based on the destination IP address.

In step **736** the system may determine if the selected tunnel is operational. If the tunnel is not operational, then the packet (Call Setup data) may be dropped, as indicated in **722**, and the process may continue as described above.

If the tunnel is operational, then in step **738** the Service Gateway **170** may perform Network Address Persistent Port Translation (NAPPT) on the Call Setup data. As indicated, the packet header information at this stage may change in the following way: the source IP address may be changed from Private to Public, while the source port remains UNCHANGED; the destination IP address may remain set to the primary MGC address; and the destination port may retain the example value 55555.

In step **740** the Service Gateway **170** may perform IP Security (IPSec) encryption on the Call Setup data. In one embodiment, the packet header information may include the following changes: the source IP address may be set to a Public NAT address, and the destination IP address may be set to the VPN Concentrator. The source and destination port information may remain unchanged.

In step **744**, the Service Gateway **170** may forward the Call Setup data over the selected tunnel. The Call Setup data may then traverse the channel partner network, e.g., the network of an ISP, as indicated in step **746**.

In step **748**, the Call Setup data may reach a Virtual Private Network (VPN) Concentrator **136**, which may decrypt the Call Setup data as shown in step **750**. Then, in step **752**, the VPN Concentrator **136** may route the Call Setup data to a local router. As shown, in one embodiment, the data packet header information at this point may include a source IP address, indicated as Public, a source port which remains UNCHANGED, as shown, a destination IP address set to the primary address of the MGC, and a destination port with the example value of 55555.

Then, the local router may forward the Call Setup data to the MGC **150**, as indicated in step **754**.

In step **756**, the system may determine if the MGC **150** responds to Address Resolution Protocol (ARP), i.e., if the MGC **150** receives the Call Setup data. If the MGC **150** does not receive the Call Setup data, then in step **722**, the packet (Call Setup data) may be dropped, and the process may continue as described above.

If the MGC **150** does receive the Call Setup data, then in step **758** the MGC **150** may process the Call Setup request, and in step **760**, may reply with a Service Change. In one embodiment, the packet header for the data now may now

include the source IP address and port set to the Primary MGC address and the example value 55555. As indicated, the destination information may include the destination IP address set to the SG public address, and the destination port remaining UNCHANGED.

In step **762**, a local router may forward the Call Setup data to the VPN Concentrator **136**, which may perform IPSec encryption on the data, as indicated in step **764**. The VPN Concentrator **136** may then route the Call Setup data to a local router, as shown in step **766**.

In step **768** the Call Setup data may traverse the channel partner network, i.e., the network of the ISP, and in step **770**, may reach the Service Gateway **170**. In step **772** the Service Gateway **170** may decrypt the Call Setup data, then perform Network Address Persistent Port Translation (NAPPT), as shown in step **774**. The packet header information may be modified such that the source IP address is set to the primary MGC address, the source port is set to the example value 55555, the destination IP address is changed from Public to Private, and the destination port remains UNCHANGED.

The SG **170** may then forward the Call Setup data out the local interface, as indicated in step **776**.

In step **778**, the system may determine if the IP telephone **120** responds to Address Resolution Protocol (ARP), i.e., receives the Call Setup data. If the IP telephone **120** does not receive the Call Setup data, then the process may continue with step **722**, as described above. If the IP telephone **120** receives the Call Setup data, then in **780** the IP telephone **120** may process the information, i.e., the Call Setup data.

In step **782**, the IP telephone may determine if the Call Setup information is valid. If the Call Setup information is not valid, then in **706** the Call Setup may fail, and the process may terminate. If the Call Setup information is valid, then in step **784** the MEGACO exchange process exchange may continue until data exchange is complete, and the process may terminate.

FIGS. **8**A, **8**B and **8**C—Internal IP Telephone To Internal IP Telephone RTP Flow

FIGS. **8**A, **8**B, and **8**C flowchart Real-Time Transport Protocol (RTP) data flow between a first internal IP telephone **120**A and a second internal IP telephone **120**B, related to a call initiated by the first internal IP telephone **120**A. RTP is an Internet Protocol for transmitting real-time data such as audio and video. RTP itself does not guarantee real-time delivery of data, but it does provide mechanisms for the sending and receiving applications to support streaming data. Typically, RTP runs on top of the UDP protocol, although the specification is general enough to support other transport protocols. It is noted that FIGS. **8**A, **8**B, and **8**C illustrate one exemplary embodiment of data flow, and that this flow may occur in various manners according to the present invention. It is further noted that various of the steps shown may be performed in different orders or omitted, or various additional steps may be performed as desired.

As shown, the RTP call process preferably occurs after the DHCP/TFTP process **404**, the client registration process **406**, and the Call Setup process **480**, described above with reference to FIGS. **5**A–**7**C.

In step **802**, IP telephone **120**A may begin an RTP call to IP telephone **120**B. As noted above, in this embodiment, both IP telephones **120** are internal to the local network.

In step **804** the system may determine if the MGC **150** provided a destination IP address and port. If the MGC **150** did not provide a destination IP address and port, then in step **806** the session mail fail, and the process may terminate. If the MGC **150** did provide a destination IP address and port, then in step **808**, the system may determine if the IP address is local or remote. The terms "local" and "remote" refer to call destinations in the customer network which are inside, or outside, respectively, of the originating IP telephone's IP subnet. In other words, if the destination is local, then the call may be sent directly to the destination IP telephone **120**, without having to be transmitted through a Service Gateway **170**.

If the IP address is remote, then in step **810** the IP telephone **120**A may transmit an RTP packet to Service Gateway (SG) **170**A, which may receive the packet in step **812**, and select a destination tunnel based on the destination IP address, as indicated in step **814**.

In step **816**, the SG **170**A may determine if the destination tunnel is operational. If the destination tunnel is not operational, then in **818**, the SG **170**A may determine if an alternate tunnel is operational. If no alternate tunnel is available, then in step **820** the packet may be dropped, the session may fail, as indicated in step **806**, and the process may terminate.

If an alternate tunnel is available, then the process may continue with step **822**, described below.

Referring back to step **816**, if the destination tunnel is operational, then in step **822** the SG **170**A may determine if the data in the destination tunnel should be NATed, i.e., if Network Address Translation should be performed on the data. Note that if the data should be NATed, then the packet may be assumed to have an external destination, and so has been inappropriately routed to the wrong interface (local). Therefore, if NAT is to be performed, then in step **824** the call may fail due to invalid IP information, the session may fail, as indicated in step **806**, and the process may terminate.

If the destination tunnel does not need to be NATed, then in step **826** the SG **170**A may perform IPSec encryption on the data (packet), and forward the data over the selected tunnel, as indicated in step **828**. In step **830**, the data may traverse the customer network, and may reach a second Service Gateway **170**B, as shown in step **832**.

In step **834**, the SG **170**B may decrypt the data, and in step **836**, may ARP for the IP telephone **120**B. In step **838**, the system may determine if the IP telephone **120**B responds to the ARP. If the IP telephone **120**B does not respond to the ARP, then in step **840** the packet may be dropped, the session may fail, as indicated in step **842**, and the process may terminate.

If the IP telephone **120**B responds to the ARP, then in step **844** the SG **170**B may forward the data to IP telephone **120**B. In step **846**, the IP telephone **120**B may reply with an RTP packet to IP telephone **120**A. In step **848**, the system may determine if the RTP session succeeded. If the RTP session did not succeed, then the session may fail, as indicated in step **842**, and the process may terminate.

If the RTP session succeeded, then in step **850**, the RTP exchange may continue until data exchange is complete.

Referring back to step **808**, if the IP address is determined to be local, then in step **852** the IP telephone **120**A may ARP for IP telephone **120**B.

In step **854**, the system may determine if the IP telephone **120**B responds to the ARP. If the IP telephone **120**B does not respond to the ARP, then in step **840** the packet may be dropped, the session may fail, as indicated in step **842**, and the process may terminate.

If the IP telephone **120**B responds to the ARP, then in step **856** IP telephone **120**A may transmit the RTP packet to IP telephone **120**B. An example packet header is shown as part of **856**, comprising a source IP address, denoted as Phone **1** Private, a source port, selected from the assigned port range

during the Call Setup process **480**, as indicated, a destination IP address, here shown as Phone **2** Private indicated by MGC during Call Setup process, and a destination port, shown as Phone **2** port indicated by MGC during Call Setup Process.

In step **858**, the IP telephone **120**B may receive the RTP packet, and in step **846**, the IP telephone **120**B may reply with an RTP packet to IP telephone **120**A. In one embodiment, the packet header may now include a source IP address, denoted as Phone **2** Private, a source port, selected from the assigned port range during the Call Setup process **480**, as indicated, a destination IP address, here shown as Phone **1** Private indicated by MGC during Call Setup process, and a destination port, shown as Phone **1** port indicated by MGC during Call Setup Process.

In step **848**, the system may determine if the RTP session succeeded. If the RTP session did not succeed, then the session may fail, as indicated in step **842**, and the process may terminate.

If the RTP session succeeded, then in step **850**, the RTP exchange may continue until data exchange is complete, at which time the process may terminate.

Thus, in one embodiment, internal IP telephone calls within the same IP subnet may be transmitted directly between IP telephones **120**, while IP telephone calls made between internal IP telephones **120** in different IP subnets may be routed through Service Gateways **170**.

FIGS. **9**A, **9**B and **9**C—IP Telephone To Trunking Gateway RTP Flow

FIGS. **9**A, **9**B, and **9**C flowchart RTP data flow from an IP telephone **120** to a Trunking Gateway **160** related to a client initiated IP telephone call. It is noted that FIGS. **9**A, **9**B, and **9**B illustrate one exemplary embodiment of data flow, and that this flow may occur in various manners according to the present invention. It is further noted that various of the steps shown may be performed in different orders or omitted, or various additional steps may be performed as desired.

As shown, the RTP call process preferably occurs after the DHCP/TFTP process **404**, the client registration process **406**, and the Call Setup process **480**, described above with reference to FIGS. **5**A–**7**C.

In step **902**, the client may begin an RTP call. In the preferred embodiment, the client initiates the call through IP telephone **120**.

In step **904** the system may determine if the MGC **150** provided a destination IP address and port. If the MGC **150** did not provide a destination IP address and port, then in step **906** the session mail fail, and the process may terminate. If the MGC **150** did provide a destination IP address and port, then in step **908**, the client may transmit an RTP packet to the destination Trunking Gateway (TG) **160**. An example packet header is shown as part of **908**, comprising a source IP address, denoted as Phone **1** Private, a source port, selected from the assigned port range during the Call Setup process **480**, as indicated, a destination IP address, here shown as TG Public indicated by MGC during the Call Setup process, and a destination port, shown as TG port indicated by MGC during the Call Setup process.

In step **910**, Service Gateway **170** may receive the RTP packet, and in step **912**, may determine if the IP destination is local or remote. If the IP destination is determined to be local then in step **914** the data (packet) may be forwarded out through the local interface, in step **906** the session may fail, and the process may terminate.

If the IP destination is remote, then in step **916**, the SG **170** may select a destination tunnel based on the destination IP address. In step **918**, the SG **170** may determine if the destination tunnel is operational. If the destination tunnel is not operational, then in **920**, the SG **170** may determine if an alternate tunnel is available. If no alternate tunnel is available, then in step **922** the packet may be dropped, the session may fail, as indicated in step **906**, and the process may terminate.

If an alternate tunnel is available, then the process may continue with step **924**, described below.

Referring back to step **918**, if the destination tunnel is operational, then in step **924** the SG **170** may perform NAPPT (Network Address Persistent Port Translation) on the data. In one embodiment, the packet header information may be modified such that the source IP address is set from Phone **1** Private to Phone **1** Public, the source port remains UNCHANGED, the destination IP address is set to the TG Public address, and the destination port as indicated by the TG.

In step **926**, the SG **170** may perform IPSec encryption on the data. In one embodiment, the packet header information may include the following changes: the source IP address is set to a Public NAT address, and the destination IP address is set to that of the VPN Concentrator. The source and destination port information may remain unchanged.

In step **928**, the SG **170** may forward the data over the selected tunnel. Then, in step **930**, the data may traverse a channel partner network, i.e., the network of an ISP, and in step **932** the data may reach a VPN Concentrator **136**. The VPN Concentrator **136** may decrypt the data, as indicated in step **934**, then, in step **936**, may forward the data to a local router.

In step **938** the data may reach the TG **160**. In step **940**, the system may determine if the TG **160** receives the data. If the TG **160** does not respond to the data, then the packet may be dropped, as indicated in step **922**, the session may fail in step **906**, and the process may terminate.

If the TG **160** does receive the data, then in step **942**, the TG may process the RTP data. In step **944**, the system may determine if the TG **160** responds. If the TG **160** does not respond, then the session may fail, as indicated in step **906**, and the process may terminate.

If the TG **160** does respond, then the system may determine if the RTP session succeeds, as indicated in step **946**. If the RTP session does succeed, then in step **948**, the RTP exchange may continue until data exchange is complete, and the process may terminate.

FIGS. **10**A and **10**B—IP Telephone to External IP Telephone RTP Flow

FIGS. **10**A and **10**B flowchart RTP data flow between an internal IP telephone **120**A and an external IP telephone **120**C, related to a call initiated by the first internal IP telephone **120**A. It is noted that FIGS. **10**A and **10**B illustrate one exemplary embodiment of data flow, and that this flow may occur in various manners according to the present invention. It is further noted that various of the steps shown may be performed in different orders or omitted, or various additional steps may be performed as desired.

As shown, the RTP call process preferably occurs after the DHCP/TFTP process **404**, the client registration process **406**, and the Call Setup process **480**, described above with reference to FIGS. **5**A–**7**C.

In step **1002**, IP telephone **120**A may begin an RTP call to an external IP telephone **120**C.

In step **1004** the system may determine if the MGC **150** provided a destination IP address and port. If the MGC **150** did not provide a destination IP address and port, then in step **1006** the session mail fail, and the process may terminate. If the MGC **150** did provide a destination IP address and port, then in step **1008**, the client may transmit an RTP packet to the destination telephone, i.e., IP telephone **120**C. In one embodiment, the packet header for the data now may include the source IP address set to Phone **1** Private, the RTP port set to the port selected during the Call Setup process, the destination IP address, set to Phone **2** Public indicated by the MGC during the Call Setup process, and the destination port, set to Phone **2** port indicated by the MGC during the Call Setup process.

In step **1010**, the Service Gateway (SG) **170** may receive the RTP (packet), and in step **1012**, may determine if the IP destination is local or remote. The terms "local" and "remote" refer to call destinations in the customer network which are inside, or outside, respectively, of the originating IP telephone's IP subnet. In other words, if the destination is local, then the call may be sent directly to the destination IP telephone **120**, without having to be transmitted through a Service Gateway **170**.

If the IP destination is local, then in step **1014** the packet may be forwarded out through the local interface, the session may fail, as indicated in **1006**, and the process may terminate.

If the IP address is determined to be remote, then in step **1016** the SG **170** may select a destination tunnel based on the destination IP address.

In step **1018**, the SG **170** may determine if the destination tunnel is operational. If the destination tunnel is not operational, then in **1020**, the SG **170** may determine if an alternate tunnel is available. If no alternate tunnel is available, then in step **1022** the packet may be dropped, the session may fail, as indicated in step **1006**, and the process may terminate.

If an alternate tunnel is available, then the process may continue with step **1024**, described below.

Referring back to step **1016**, if the destination tunnel is operational, then in step **1024** the SG **170** may perform NAPPT on the call data, i.e., the packet. In one embodiment, the packet header information may be changed as follows: the source IP address may be changed from Phone **1** Private to Phone **1** Public, the source port may remain UNCHANGED, the destination IP address may be set to Phone **2** Public, and the destination port may be set to Phone **2**, as indicated.

In step **1026** the SG **170** may perform IPSec encryption on the call data (packet). The original packet is encapsulated in a new packet with a source address of the external interface address of the Service Gateway, and the destination address on the VPN Concentrator. In **1030**, the SG **170** may forward the data over the selected tunnel. In step **1032**, the data may traverse the customer network, and may reach a VPN Concentrator **136**A, as shown in step **1034**. In step **1036**, the VPN Concentrator **136**A may decrypt the call data.

In step **1038**, the VPN Concentrator **136**A may determine if the destination route is local or on a tunnel. It should be noted that, depending upon whether the destination route used a local gateway or a tunnel, a second VPN Concentrator **136**B or the first VPN Concentrator **136**A, respectively, performs the steps **1046** and **1048**, below, as shown.

If the destination route uses a local gateway, then in step **1040**, the VPN Concentrator **136**A may route the call data to a local router, which may forward the data to a second VPN Concentrator **136**B, as indicated in step **1042**. In step **1044** the data may reach the second VPN Concentrator **136**B, which may select a destination tunnel based on the destination IP address, as indicated in step **1046**. In step **1048**, the second VPN Concentrator **136**B may perform IPSec encryption on the data.

Referring back to step **1038**, if the destination route is on a tunnel, then in step **1046**, the VPN Concentrator **136**A may select a destination tunnel based on the destination IP address, as indicated in step **1046**. In step **1048**, the VPN Concentrator **136**A may perform IPSec encryption on the data.

In step **1050**, the data may be forwarded over the selected tunnel. Then, in step **1058** the data may traverse the channel partner network, and in step **1060** may reach the second SG **170**B. The second SG **170**B may decrypt the data, as indicated in step **1062**, perform NAPPT in step **1064**. In one embodiment, the packet header may now include a source IP address, set to Phone **1** Public NAT, a source port which remains the UNCHANGED Phone **1** port, a destination IP address, changed from Phone **2** Public to Phone **2** Private, and a destination port which remains as the UNCHANGED Phone **2** port.

Then, the second SG **170**B may forward the data out through the local interface, as shown in step **1066**.

In step **1068**, the system may determine if the IP telephone **120**A receives the data, i.e., responds to ARP. If the IP telephone **120**A does not receive the data, then the packet may be dropped, as indicated in step **1022**, the session may fail and the process may terminate. If the IP telephone **120**A does receive the data, then in step **1070** the second IP telephone **120**B may process the RTP data.

In step **1072**, the system may determine if IP telephone **120**B responds, i.e., receives the data. If IP telephone **120**B does not respond, then the session may fail, as indicated in step **1006**, and the process may terminate. If IP telephone **120**B responds, then in step **1074** the system may determine if the RTP session succeeds.

If the RTP session succeeded, then in step **1076**, the RTP exchange may continue until data exchange is complete, and the process may terminate.

FIG. **11**: A Solution to the Triangle Problem

FIG. **11** illustrates one embodiment of a solution to the triangle problem, described above, which may be implemented by various embodiments of the present invention. It is noted that FIG. **11** illustrates one exemplary embodiment of the triangle problem solution process, and that this solution process may be performed in various manners according to the present invention. It is further noted that various of the steps shown may be performed in different orders or omitted, or various additional steps may be performed as desired.

As FIG. **11** shows, in **1102**, a Call Setup request may be received. In one embodiment, the Call Setup request may include a source IP address and a destination telephone number.

In **1104**, a first Media Gateway may be selected based on the source IP address. For example, in one embodiment, the first Media Gateway may be selected via a table look-up, where an association may be stored between source IP addresses and corresponding Media Gateways.

In **1106**, a second Media Gateway may be selected based on the destination telephone number. In one embodiment, the second Media Gateway may also be selected via a table look-up, where an association may be stored between destination telephone numbers and corresponding Media Gateways.

It should be noted that in various embodiments, the first and/or second Media Gateways may be IP telephones, Trunking Gateways, Fax machines, pagers, or any other type of Media Gateway. In an embodiment where one of the Media Gateways is a Trunking Gateway, the Trunking Gateway may provide an interface to the Public Switched Telephone Network (PSTN), whereby communications with external telephony devices may be performed.

In **1108**, a public IP address of the first Media Gateway may be compared to a public IP address of the second Media Gateway, and if the public IP address of the first Media Gateway is the same as the public IP address of the second Media Gateway, then in **1110**, a private IP address of the first Media Gateway and a private IP address of the second Media Gateway may be selected for Call Setup.

If the public IP address of the first Media Gateway is not the same as the public IP address of the second Media Gateway, then in **1112** the public IP address of the first Media Gateway and the public IP address of the second Media Gateway may be selected for Call Setup.

In **1114**, the selected IP address (whether private or public) of the first Media Gateway may be sent to the second Media Gateway, and the selected IP address of the second Media Gateway may be sent to the first Media Gateway, according to one embodiment. Thus, the Media Gateways may be provided with respective destination IP addresses for the current call session. In one embodiment, these IP addresses may be provided by a registration process prior to the Call Setup request, as described above with reference to FIGS. **4**A, **4**B, **6**A, **6**B and **6**C. For example, in one embodiment, a Media Gateway may register with Media Gateway Controller **150**, by sending the Media Gateway's public IP address. The public IP address may be received and stored (e.g., by the Media Gateway Controller **150**) for later reference in the Call Setup process. In the case where the Media Gateway is internal to the system (as opposed to a Trunking Gateway leading to external IP devices), registering the Media Gateway (e.g., with the Media Gateway Controller **150**) may also include sending a private IP address of the Media Gateway, and storing the private IP address for use as described above.

Finally, in **1116**, the first Media Gateway may send data to the second Media Gateway using the selected IP address of the second Media Gateway, and the second Media Gateway may send data to the first Media Gateway using the selected IP address of the first Media Gateway. In other words, the call session between the two Media Gateways may proceed.

Thus, by receiving and storing distinguishing information related to the Media Gateways, such as IP addresses and associated telephone numbers, among others, the method may distinguish between bilateral internal call sessions and call sessions involving an internal IP telephone and an external device, e.g., an external telephone interfacing through a Trunking Gateway to an internal IP telephone.

FIGS. **2**–**11** illustrate various exemplary applications where the invention may be used. However, it is noted that the invention is not limited to these applications, but rather may be used in any of various applications.

Memory and Carrier Medium

The system preferably includes a memory medium on which software according to an embodiment of the present invention may be stored. The term "memory medium" is intended to include an installation medium, e.g., a CD-ROM, floppy disks, or tape device; a computer system memory or random access memory (RAM) such as DRAM, SRAM, EDO RAM, RRAM, etc.; or a non-volatile memory such as a magnetic media, e.g., a hard drive, or optical storage. The memory medium may include other types of memory as well, or combinations thereof.

In addition, the memory medium may be located in a first computer in which the software program is stored or executed, or may be located in a second different computer which connects to the first computer over a network, such as the Internet. In the latter instance, the second computer provides the program instructions to the first computer for execution. Also, the computer system may take various forms, including a personal computer system, mainframe computer system, workstation, network appliance, Internet appliance, personal digital assistant (PDA), television set-top box, or other device. In general, the term "computer system" can be broadly defined to encompass any device having at least one processor which executes instructions from a memory medium, or any device which includes programmable logic that is configurable to perform a method or algorithm.

Various embodiments further include receiving or storing instructions and/or data implemented in accordance with the foregoing description upon a carrier medium. Suitable carrier media include a memory medium as described above, as well as signals such as electrical, electromagnetic, or digital signals, conveyed via a communication medium such as networks and/or a wireless link.

Although the embodiments above have been described in considerable detail, numerous variations and modifications will become apparent to those skilled in the art once the above disclosure is fully appreciated. It is intended that the following claims be interpreted to embrace all such variations and modifications.

We claim:

1. A method for performing IP telephony, comprising:

receiving an identifier from the IP telephone;

determining if the identifier is valid; and

if the identifier is valid, assigning a range of port numbers to the IP telephone based on the identifier, wherein the IP telephone is operable to use at least a subset of the range of port numbers to send or receive IP communications;

a Service Gateway receiving a data packet from the IP telephone, wherein the data packet comprises a private source IP address of the IP telephone, a source port number, and destination information associated with an IP device;

the Service Gateway performing a network address persistent port translation (NAPPT) on the data packet, including storing translation information in a data structure, wherein the translation information comprises:

the private source IP address of the IP telephone;

a public IP address of the Service Gateway; and

the assigned ports for the IP telephone; and

the Service Gateway sending the data packet to the IP device.

2. The method of claim **1**, wherein said performing a network address persistent port translation (NAPPT) on the data packet comprises changing the private source IP address to a public source IP address while leaving the source port number unchanged, and wherein the public source IP address and the source port number may be used to uniquely identify the IP telephone.

3. The method of claim **1**, further comprising:

receiving a data packet from the IP device, wherein the data packet comprises a public destination IP address,

a destination port number, and source information, wherein said public destination IP address comprises said public source IP address, and wherein said destination port number comprises said source port number;

performing a network address persistent port translation (NAPPT) on the data packet received from the IP device; and

sending the data packet received from the IP device to the IP telephone.

4. The method of claim **3**, wherein said performing a network address persistent port translation (NAPPT) on the data packet received from the destination comprises using the public destination IP address and the destination port number to uniquely identify the IP telephone, and changing the public destination IP address to the private source IP address while leaving the destination port number unchanged.

5. The method of claim **3**, wherein said source port number and said destination port number are in an assigned range of port numbers comprising ports which are not reserved for use by other IP protocols.

6. The method of claim **1**, wherein said range of port numbers comprises ports which are not reserved for use by other IP protocols.

7. The method of claim **1**, wherein the identifier comprises a vendor class identifier.

8. The method of claim **1**, wherein said determining comprises:

determining if a MAC ID for the IP telephone is valid; and

if the MAC ID is determined to be valid, then determining if the identifier is valid.

9. The method of claim **1**, wherein said identifier is comprised in a DHCP discover message, the method further comprising:

issuing a DHCP offer to the IP telephone if the identifier is determined to be valid, wherein the DHCP offer comprises DHCP lease information based on the validated identifier;

the IP telephone issuing a DHCP request in response to the issued DHCP offer;

storing the DHCP lease information in response to the issued DHCP request;

the IP telephone storing the DHCP lease information; and

the IP telephone enabling DHCP settings comprised in the DHCP lease information.

10. The method of claim **9**,

wherein said DHCP lease information includes the range of port numbers and information indicating operational software for the IP telephone, the method further comprising:

the IP telephone executing the indicated operational software to enable said IP communications.

11. The method of claim **9**,

wherein said DHCP lease information includes the range of port numbers and information indicating operational software for the IP telephone, the method further comprising:

the IP telephone issuing a request for the operational software;

providing the operational software to the IP telephone in response to the issued request; and

the IP telephone executing the provided operational software to enable said IP communications.

12. The method of claim **11**, wherein the IP telephone issuing the request for the operational software comprises issuing a read request to a file transfer server, wherein said file transfer server performs said providing the operational software to the IP telephone.

13. The method of claim **12**, wherein the file transfer server comprises a TFTP (Trivial File Transfer Protocol) server.

14. The method of claim **1**, wherein the range of port numbers comprises one or more port numbers.

15. A system for performing IP telephony, comprising:

a network;

an IP telephone;

a Service Gateway, wherein the Service Gateway is operable to couple to the IP telephone through the network;

wherein the Service Gateway is further operable to:

receiving an identifier from the IP telephone;

determining if the identifier is valid; and

if the identifier is valid, assigning a range of port numbers to the IP telephone based on the identifier, wherein the IP telephone is operable to use at least a subset of the range of port numbers to send or receive IP communications;

receive a data packet from an IP telephone, wherein the data packet comprises a private source IP address, a source port number, and destination information associated with an IP device;

perform a network address persistent port translation (NAPPT) on the data packet, including storing translation information in a data structure, wherein the translation information comprises:

the private source IP address of the IP telephone;

a public IP address of the Service Gateway; and

assigned ports for the IP telephone; and

send the data packet to the IP device.

16. The system of claim **15**, wherein, in performing a network address persistent port translation (NAPPT) on the data packet, the Service Gateway is operable to:

change the private source IP address to a public source IP address while leaving the source port number unchanged, and wherein the public source IP address and the source port number may be used to uniquely identify the IP telephone.

17. The system of claim **15**, wherein the Service Gateway is further operable to:

receive a data packet from the IP device, wherein the data packet comprises a public destination IP address, a destination port number, and source information, wherein said public destination IP address comprises said public source IP address, and wherein said destination port number comprises said source port number;

perform a network address persistent port translation (NAPPT) on the data packet received from the IP device; and

send the data packet received from the IP device to the IP telephone.

18. The system of claim **17**, wherein, in performing a network address persistent port translation (NAPPT) on the data packet received from the IP device, the Service Gateway is operable to:

use the public destination IP address and the destination port number to uniquely identify the IP telephone; and

change the public destination IP address to the private source IP address while leaving the destination port number unchanged.

19. The system of claim **17**, wherein said source port number and said destination port number are in an assigned

range of port numbers comprising ports which are not reserved for use by other IP protocols.

20. The system of claim **15**, wherein said range of port numbers comprises ports which are not reserved for use by other IP protocols.

21. The system of claim **15**, wherein the identifier comprises a vendor class identifier.

22. The system of claim **15**, wherein, in determining if the identifier is valid, the Service Gateway is operable to:

determine if a MAC ID for the IP telephone is valid; and

if the MAC ID is determined to be valid, then determine if the identifier is valid.

23. The system of claim **15**, wherein said identifier is comprised in a DHCP discover message;

wherein the Service Gateway is further operable to issue a DHCP offer to the IP telephone if the identifier is determined to be valid, wherein the DHCP offer comprises DHCP lease information based on the validated identifier;

wherein the IP telephone is further operable to issue a DHCP request in response to the issued DHCP offer, store the DHCP lease information, and enable DHCP settings comprised in the DHCP lease information;

wherein the Service Gateway is further operable to store the DHCP lease information in response to the issued DHCP request.

24. The system of claim **23**,

wherein said DHCP lease information includes the range of port numbers and information indicating operational software for the IP telephone;

wherein the IP telephone if further operable to execute the indicated operational software to enable said IP communications.

25. The system of claim **23**,

wherein said DHCP lease information includes the range of port numbers and information indicating operational software for the IP telephone;

wherein the IP telephone is further operable to issue a request for the operational software;

wherein the Service Gateway is further operable to provide the operational software to the IP telephone in response to the issued request; and

wherein the IP telephone is further operable to execute the provided operational software to enable said IP communications.

26. The system of claim **25**, further comprising:

a file transfer server;

wherein, in issuing the request for the operational software, the IP telephone is operable to issue a read request to the file transfer server, wherein said file transfer server is operable to provide the operational software to the IP telephone.

27. The system of claim **26**, wherein the file transfer server comprises a TFTP (Trivial File Transfer Protocol) server.

28. The system of claim **27**, wherein the file transfer server is comprised in the Service Gateway.

29. The system of claim **15**, wherein the range of port numbers comprises one or more port numbers.

30. A memory medium comprised in a Service Gateway, wherein the memory medium is operable to store program instructions which are executable to perform:

receiving an identifier from the IP telephone;

determining if the identifier is valid;

if the identifier is valid, assigning a range of port numbers to the IP telephone based on the identifier, wherein the IP telephone is operable to use at least a subset of the range of port numbers to send or receive IP communications;

receiving a data packet from an IP telephone, wherein the data packet comprises a private source IP address, a source port number, and destination information associated with an IP device;

performing a network address persistent port translation (NAPPT) on the data packet, including storing translation information in a data structure, wherein the translation information comprises:

the private source IP address of the IP telephone;

a public IP address of the Service Gateway; and

assigned ports for the IP telephone; and

sending the data packet to the IP device.

31. The memory medium of claim **30**, wherein said performing a network address persistent port translation (NAPPT) on the data packet comprises changing the private source IP address to a public source IP address while leaving the source port number unchanged, and wherein the public source IP address and the source port number may be used to uniquely identify the IP telephone.

32. The memory medium of claim **30**, wherein the program instructions are further executable to perform:

receiving a data packet from the IP device, wherein the data packet comprises a public destination IP address, a destination port number, and source information, wherein said public destination IP address comprises said public source IP address, and wherein said destination port number comprises said source port number;

performing a network address persistent port translation (NAPPT) on the data packet received from the IP device; and

sending the data packet received from the IP device to the IP telephone.

33. The memory medium of claim **32**, wherein said performing a network address persistent port translation (NAPPT) on the data packet received from the destination comprises using the public destination IP address and the destination port number to uniquely identify the IP telephone, and changing the public destination IP address to the private source IP address while leaving the destination port number unchanged.

34. The memory medium of claim **32**, wherein said source port number and said destination port number are in an assigned range of port numbers comprising ports which are not reserved for use by other IP protocols.

35. The memory medium of claim **30**, wherein said range of port numbers comprises ports which are not reserved for use by other IP protocols.

36. The memory medium of claim **30**, wherein the identifier comprises a vendor class identifier.

37. The memory medium of claim **30**, wherein said determining comprises:

determining if a MAC ID for the IP telephone is valid; and

if the MAC ID is determined to be valid, then determining if the identifier is valid.

38. The memory medium of claim **30**, wherein said identifier is comprised in a DHCP discover message, and wherein the program instructions are further executable to perform:

issuing a DHCP offer to the IP telephone if the identifier is determined to be valid, wherein the DHCP offer comprises DHCP lease information based on the validated identifier;

receiving a DHCP request from the IP telephone in response to the issued DHCP offer; and

storing the DHCP lease information in response to the issued DHCP request;

wherein the DHCP lease information comprises DHCP settings which may be enabled by the IP telephone.

39. The memory medium of claim **38**,

wherein said DHCP lease information includes the range of port numbers and information indicating operational software for the IP telephone; and

wherein the indicated operational software is executable by the IP telephone to enable said IP communications.

40. The memory medium of claim **38**,

wherein said DHCP lease information includes the range of port numbers and information indicating operational software for the IP telephone;

wherein the program instructions are further executable to perform:

receiving a request from the IP telephone for the operational software; and

providing the operational software to the IP telephone in response to the issued request;

wherein the indicated operational software is executable by the IP telephone to enable said IP communications.

41. The memory medium of claim **40**, wherein the IP telephone issuing the request for the operational software comprises issuing a read request to a file transfer server, wherein said file transfer server performs said providing the operational software to the IP telephone.

42. The memory medium of claim **41**, wherein the file transfer server comprises a TFTP (Trivial File Transfer Protocol) server.

43. The memory medium of claim **30**, wherein the range of port numbers comprises one or more port numbers.

* * * * *