US011569646B2

(12) **United States Patent**
Smith et al.

(10) **Patent No.: US 11,569,646 B2**
(45) **Date of Patent: Jan. 31, 2023**

(54) **LOCKING CABLE HANGER AND METHOD OF USING**

(71) Applicant: **CAMBRIA COUNTY ASSOCIATION FOR THE BLIND AND HANDICAPPED**, Johnstown, PA (US)

(72) Inventors: **Allen Garrett Smith**, Johnstown, PA (US); **Frank Edward Hodge**, Portage, PA (US); **David James Prasko**, Hastings, PA (US); **Timothy Joseph Wedding**, Johnstown, PA (US)

(73) Assignee: **CAMBRIA COUNTY ASSOCIATION FOR THE BLIND AND HANDICAPPED**, Johnstown, PA (US)

(*) Notice: Subject to any disclaimer, the term of this patent is extended or adjusted under 35 U.S.C. 154(b) by 0 days.

(21) Appl. No.: **17/199,992**

(22) Filed: **Mar. 12, 2021**

(65) **Prior Publication Data**

US 2021/0226433 A1 Jul. 22, 2021

Related U.S. Application Data

(63) Continuation of application No. 15/662,474, filed on Jul. 28, 2017, now Pat. No. 10,978,861, which is a continuation of application No. 14/556,117, filed on Nov. 29, 2014, now Pat. No. 9,722,405.

(51) **Int. Cl.**
H02G 3/30 (2006.01)

(52) **U.S. Cl.**
CPC ***H02G 3/30*** (2013.01)

(58) **Field of Classification Search**
None
See application file for complete search history.

(56) **References Cited**

U.S. PATENT DOCUMENTS

499,549	A	6/1893	Hunter et al.	
1,609,052	A	11/1926	Blackburn	
1,698,531	A *	1/1929	Brenizer	H02G 7/10 248/61
1,705,233	A *	3/1929	Brenizer	H02G 7/10 248/61
1,720,746	A	7/1929	Povlsen et al.	
1,869,407	A *	8/1932	Brenizer	H02G 7/10 248/61
1,912,704	A	6/1933	Graham	
2,106,006	A	1/1938	Klein	
2,172,174	A	9/1939	Pierson	
2,210,722	A	8/1940	Klein	
2,384,440	A	9/1945	Carr	
8,294,030	B2 *	10/2012	Pollard, Jr.	H02G 3/24 174/155
9,518,683	B1 *	12/2016	Heppler	F16L 3/237
2011/0079427	A1	4/2011	Powale et al.	
2011/0089294	A1	4/2011	Buytaert et al.	
2012/0318934	A1 *	12/2012	Thomas	F16L 3/133 248/58

FOREIGN PATENT DOCUMENTS

CA	2190036 A1 *	5/1998		H02G 7/06

* cited by examiner

Primary Examiner — Steven M Marsh
(74) *Attorney, Agent, or Firm* — Eckert Seamans Cherin & Mellott, LLC

(57) **ABSTRACT**

A cable hanger for the solar, mining, and electrical industry for use in supporting a plurality of conductive cables from a messenger wire.

8 Claims, 12 Drawing Sheets

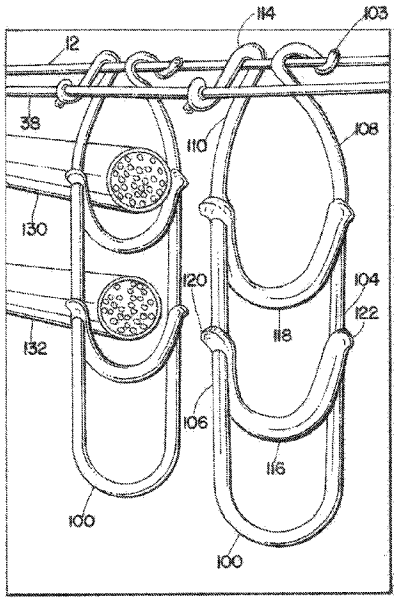

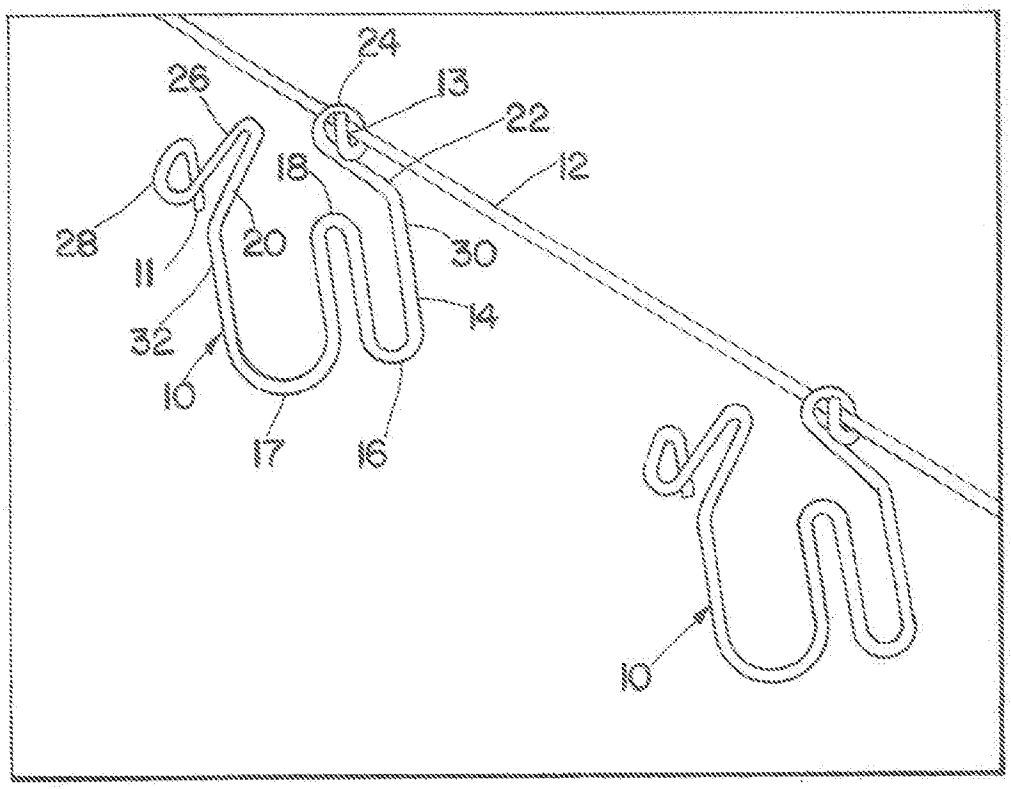
24
26
13
22
12
18
28
20
30
11
14
32
10
17
16
10

Fig. 1

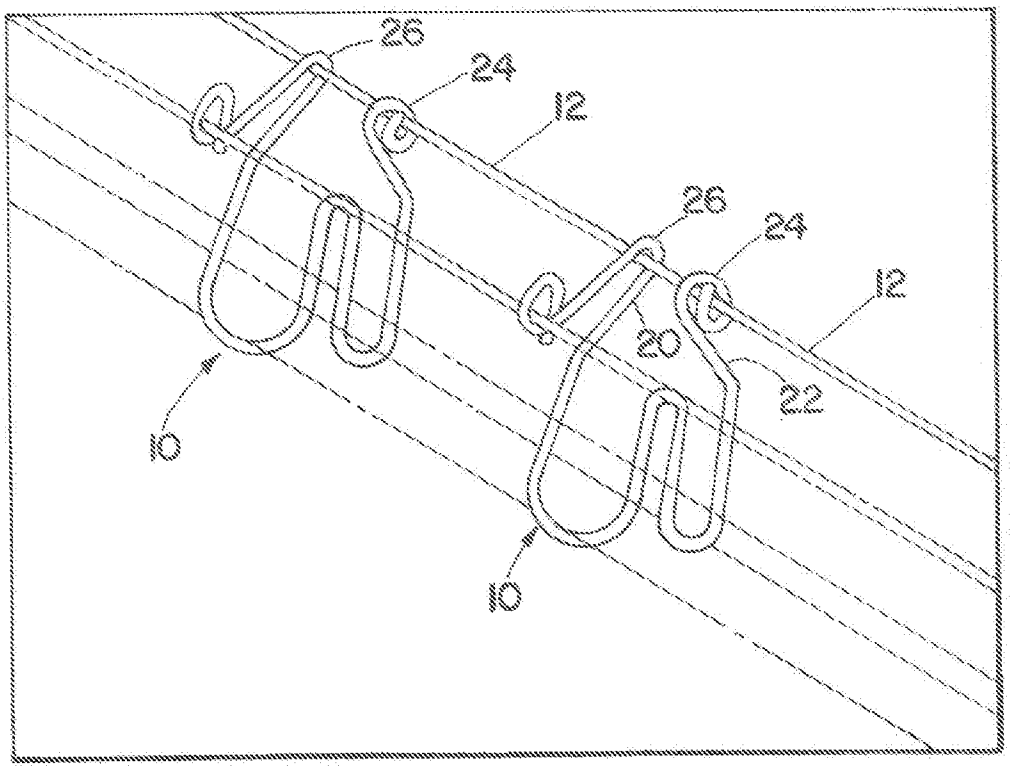
26
24
12
26
24
12
20
22
10
10

Fig. 2

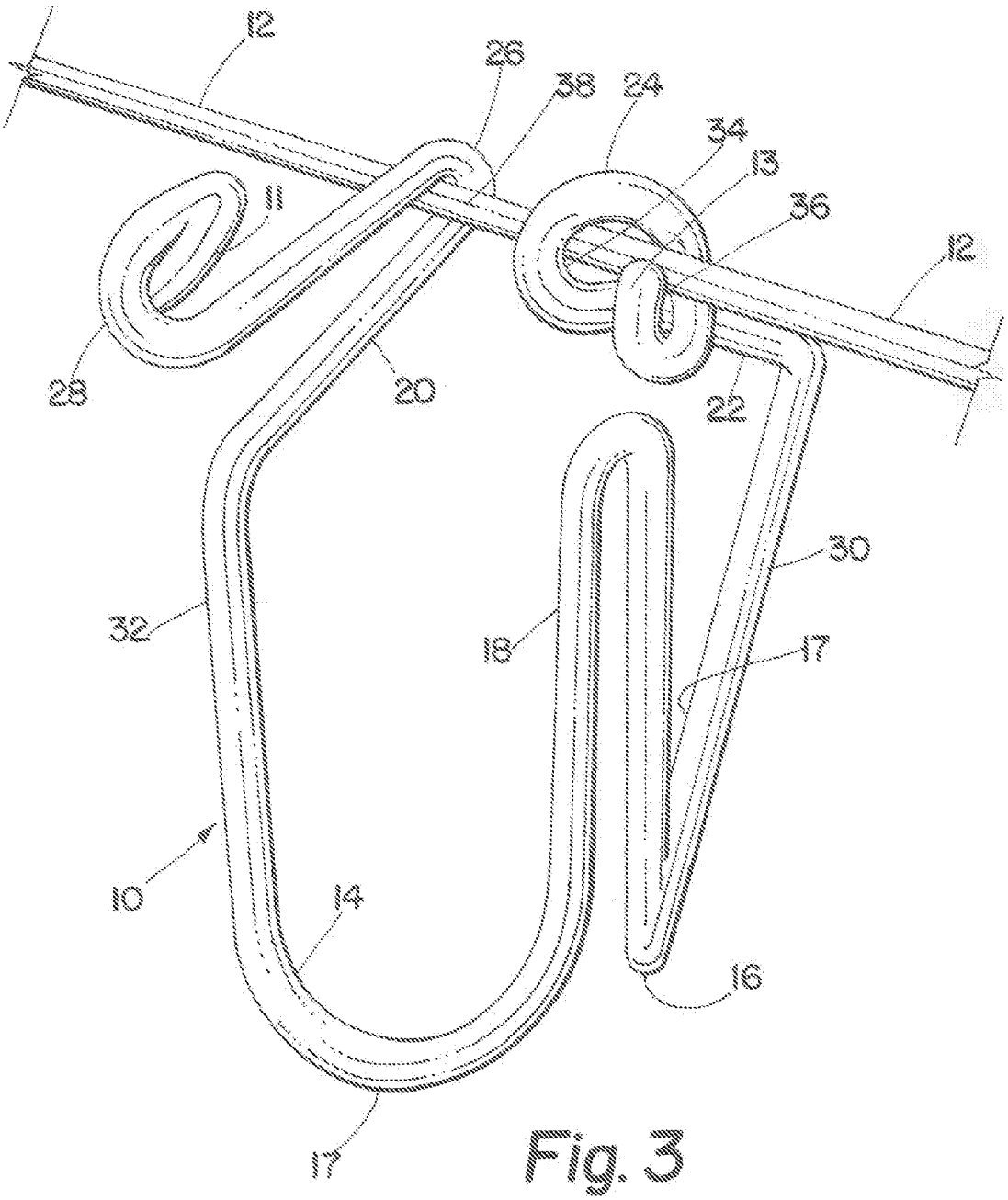

Fig. 3

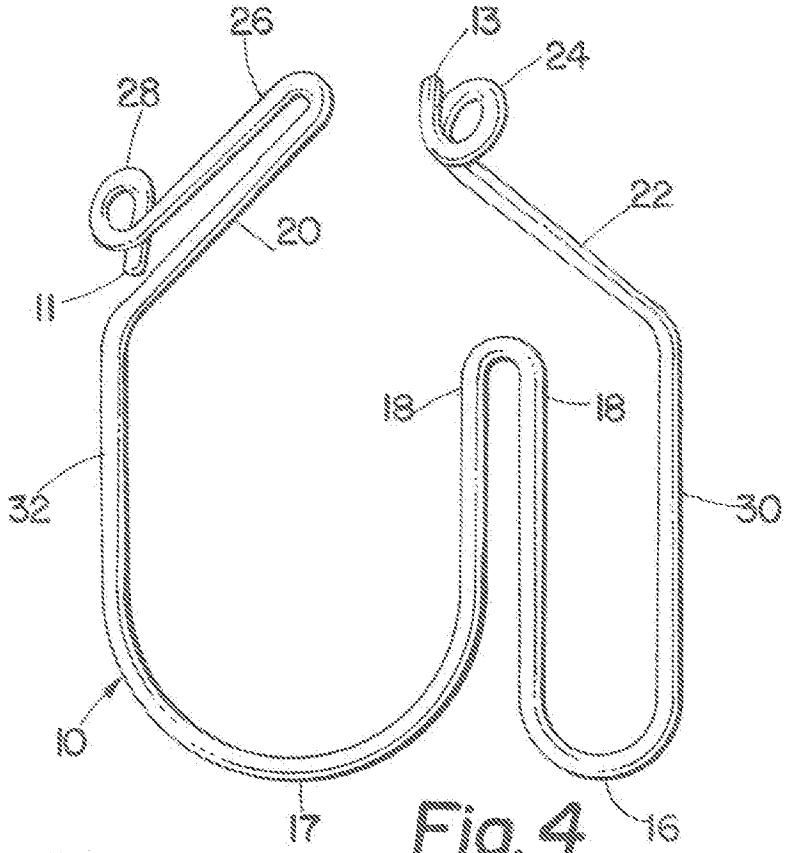

Fig. 4

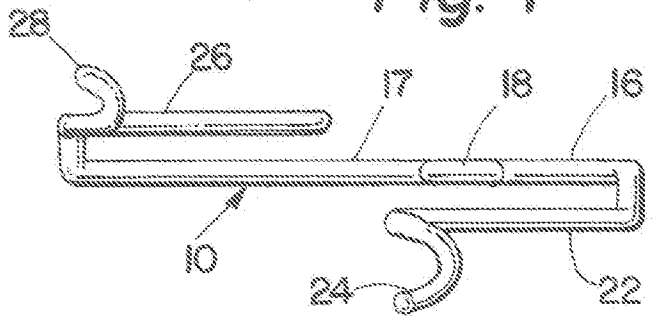

Fig. 5

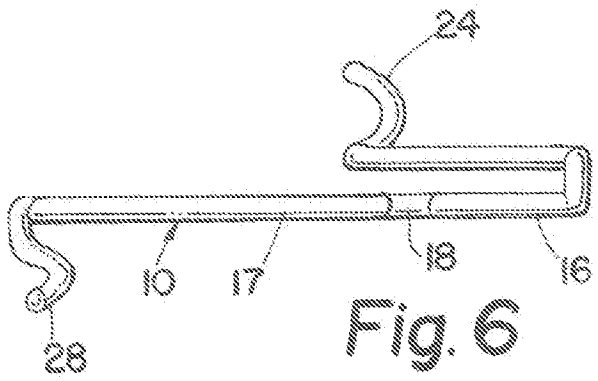

Fig. 6

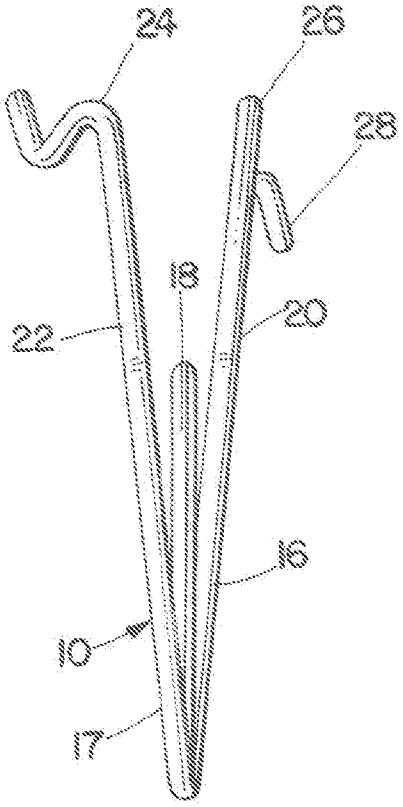

Fig. 7

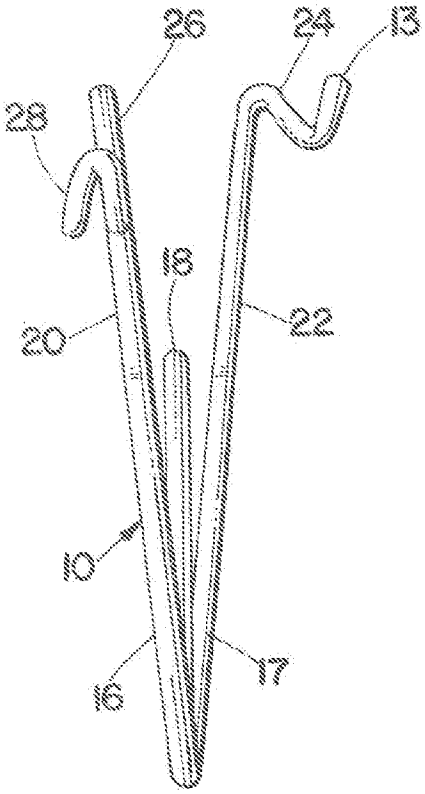

Fig. 8

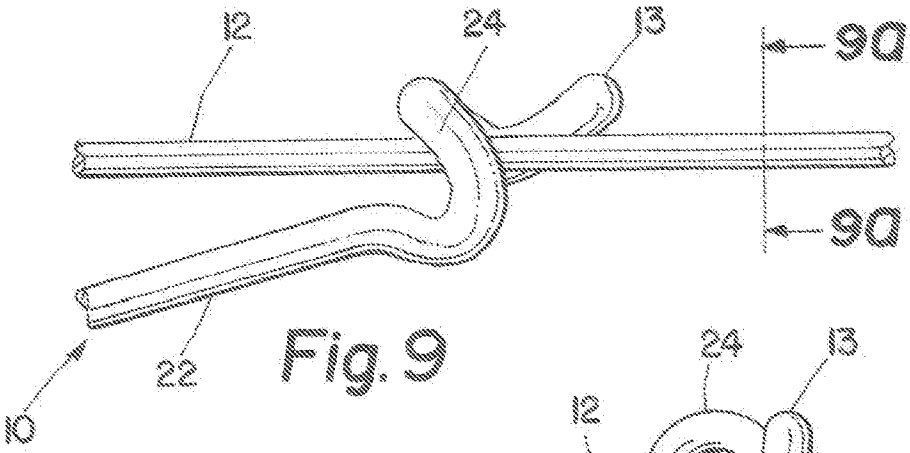

Fig. 9

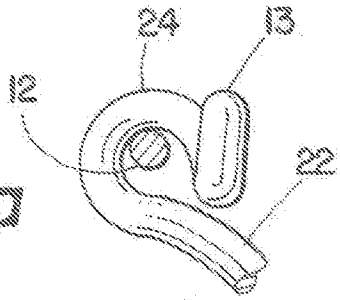

Fig. 9a

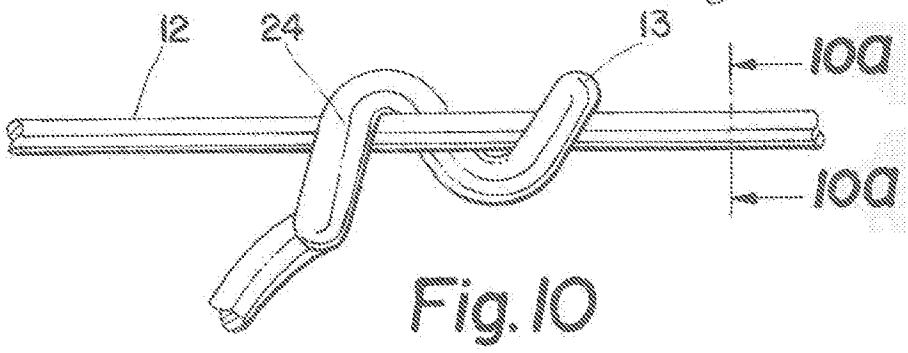

Fig. 10

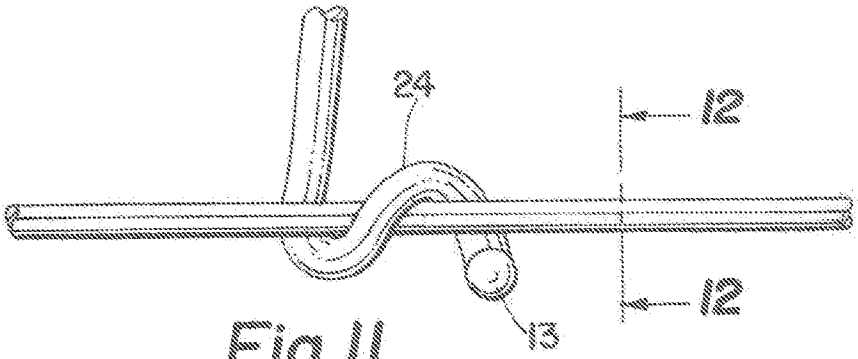

Fig. 11

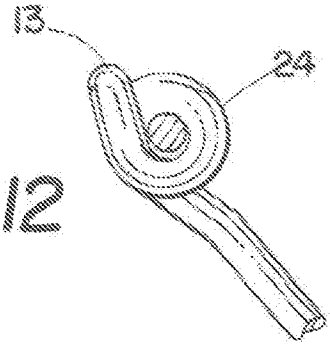

Fig. 12

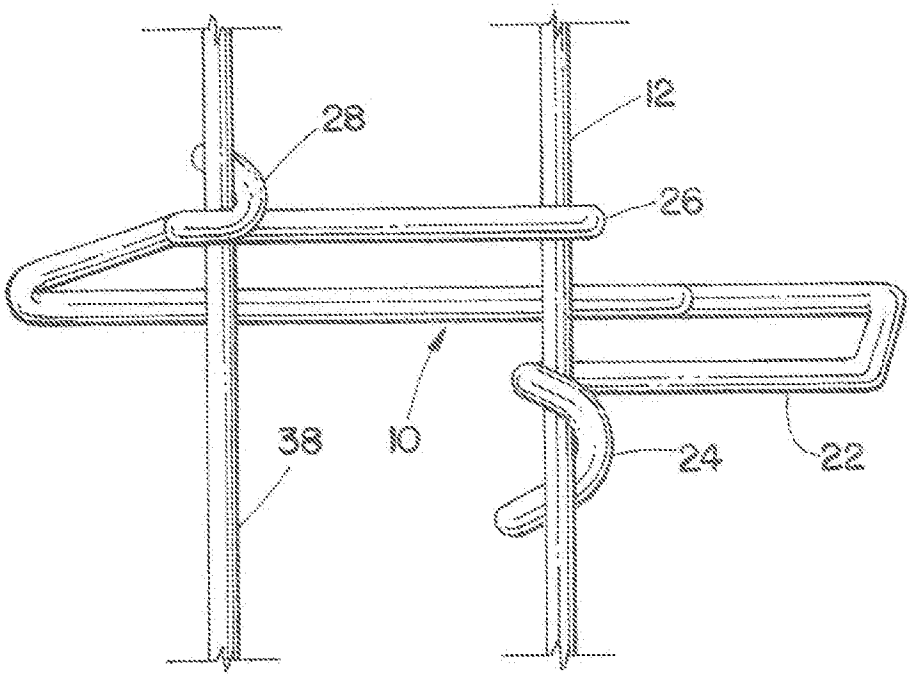

Fig. 13

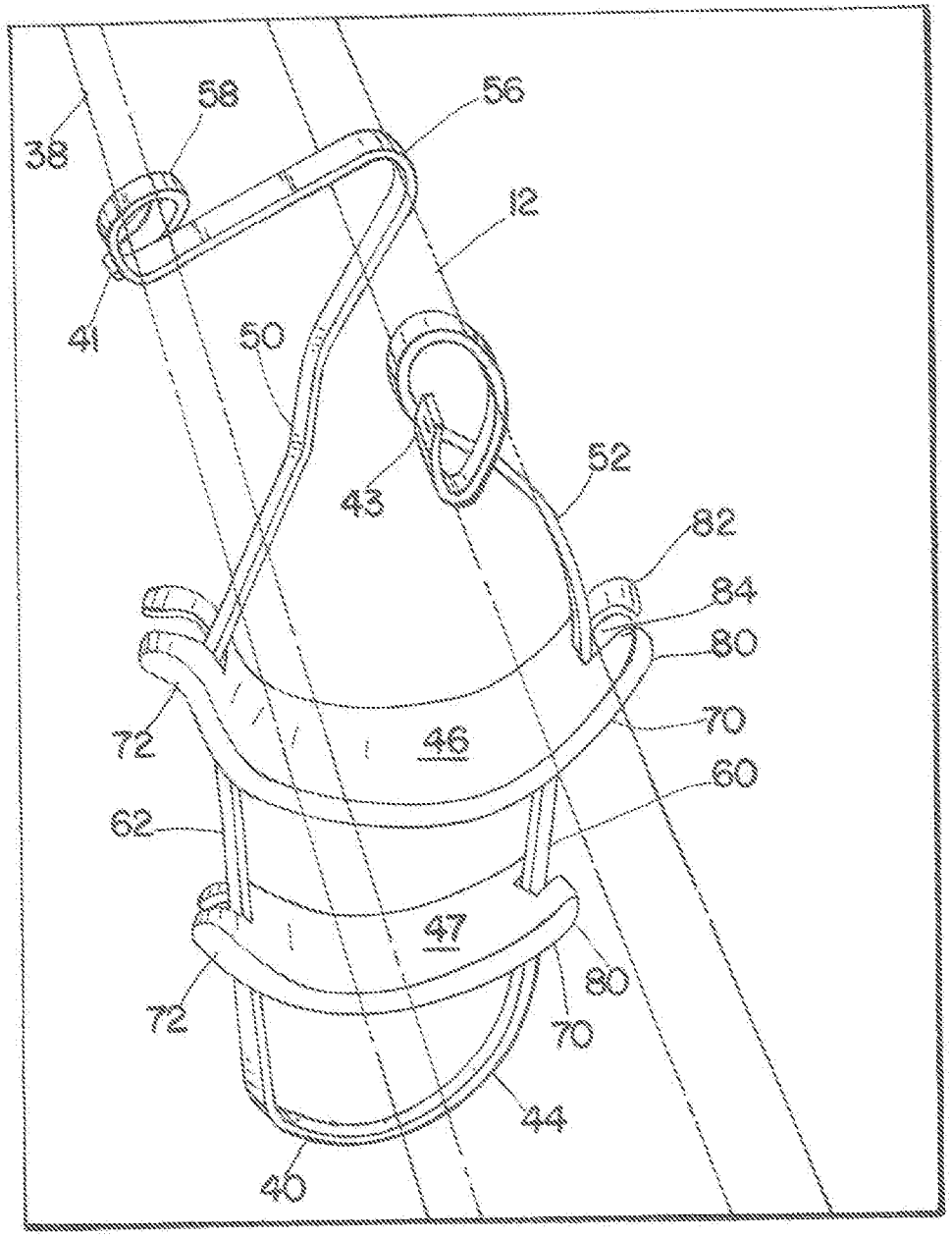

Fig. 14

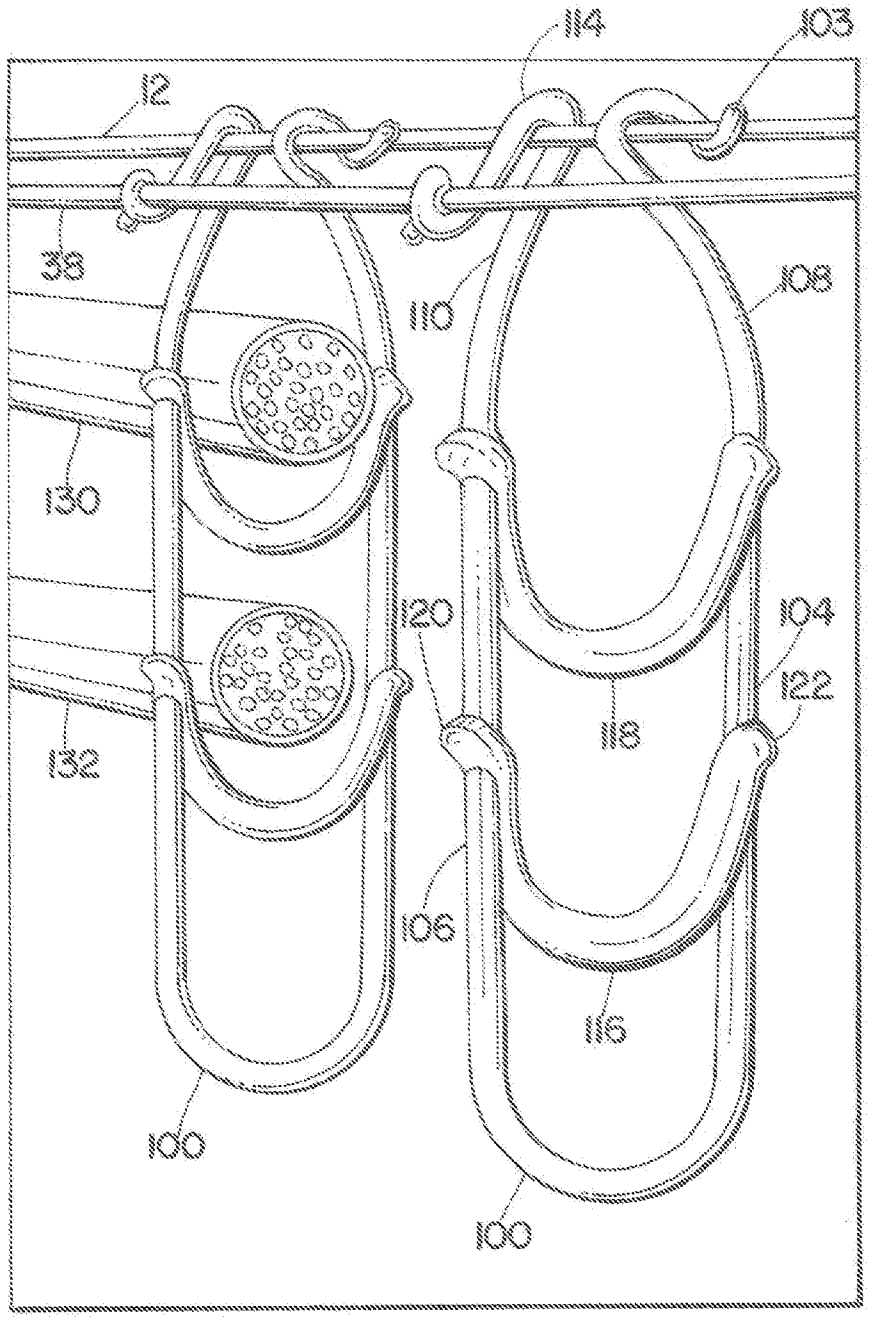

Fig. 15

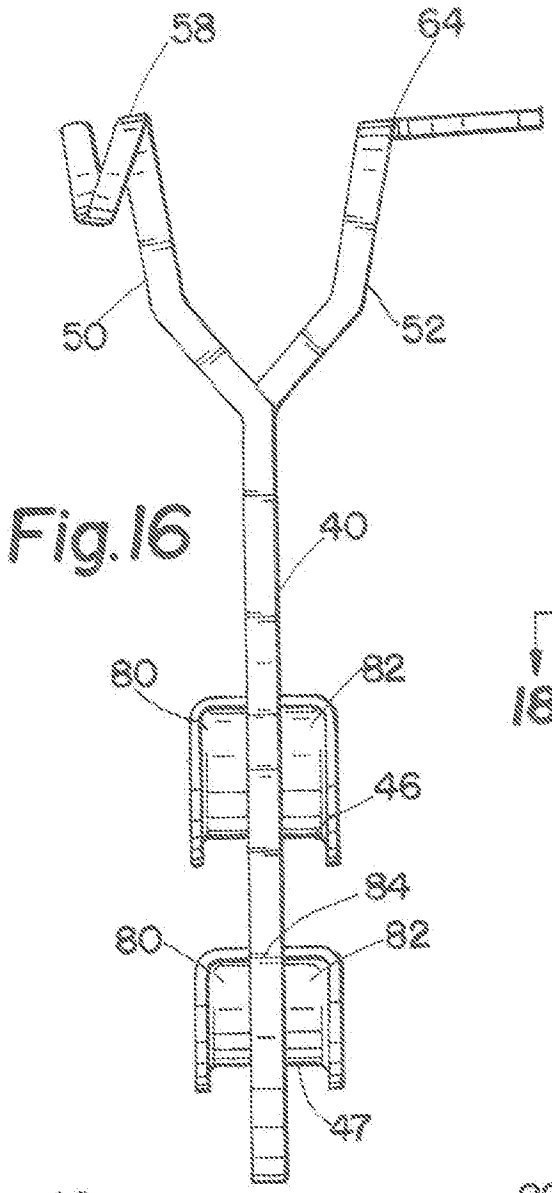

Fig.16

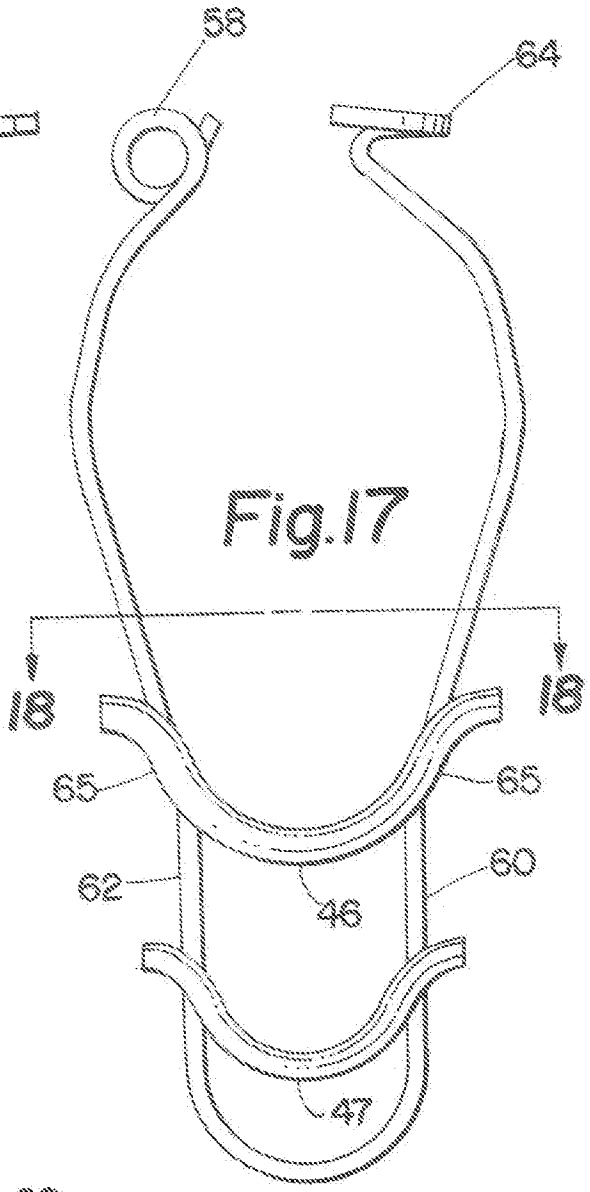

Fig.17

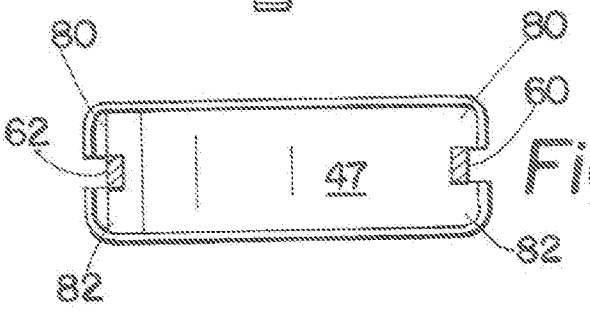

Fig.18

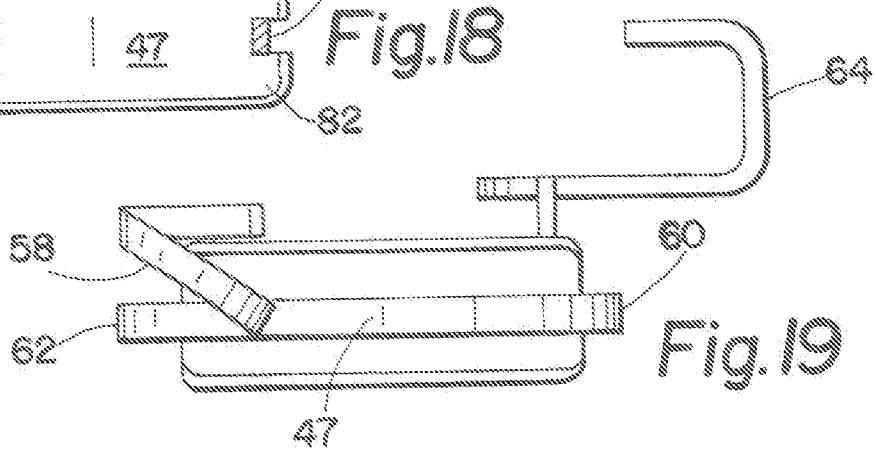

Fig.19

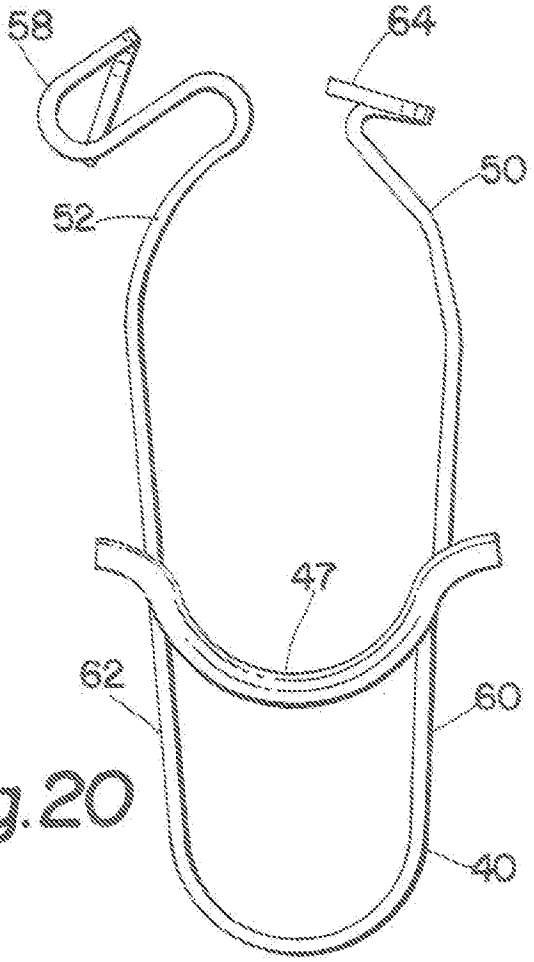

Fig.20

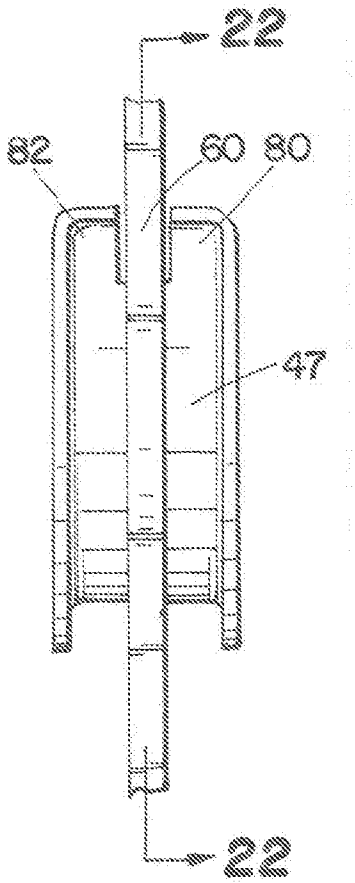

Fig.21

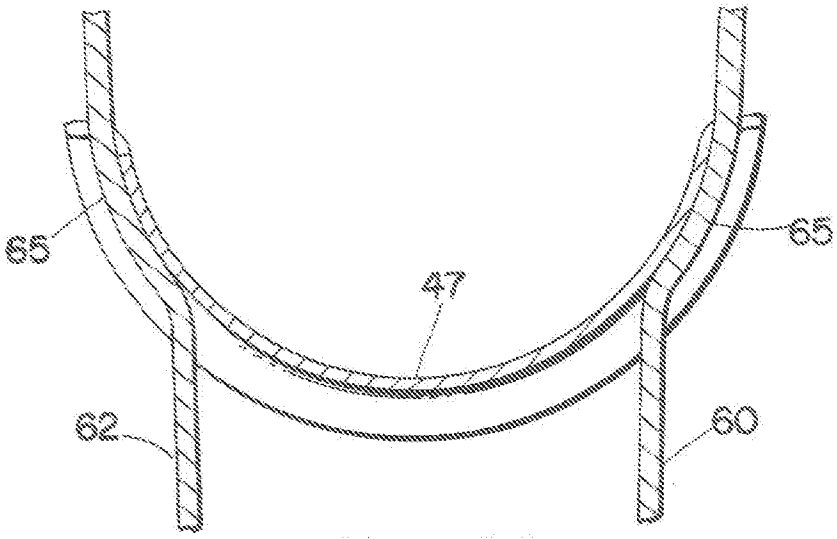

Fig.22

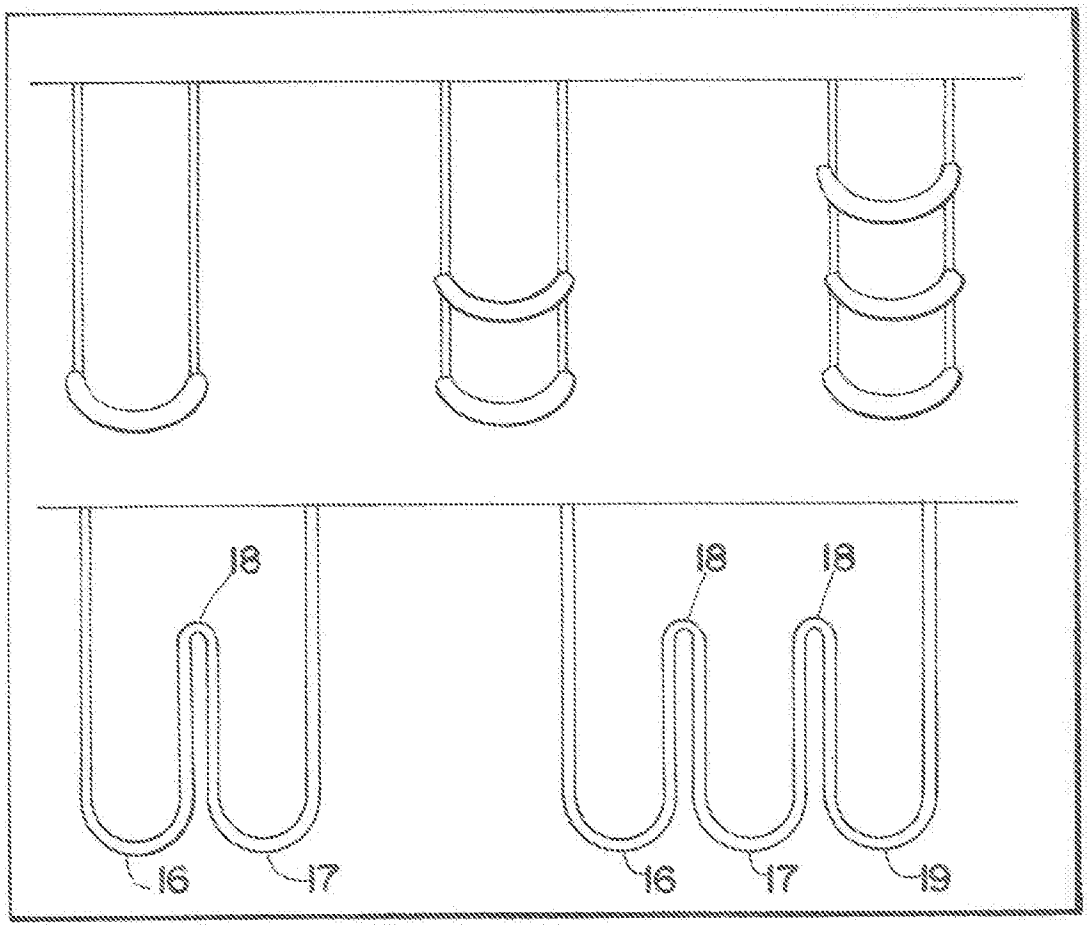

Fig. 23

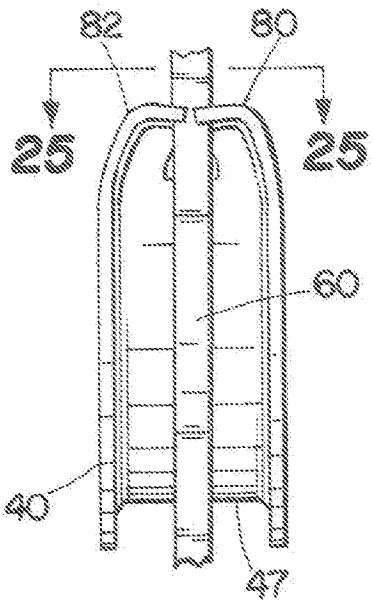

Fig. 24

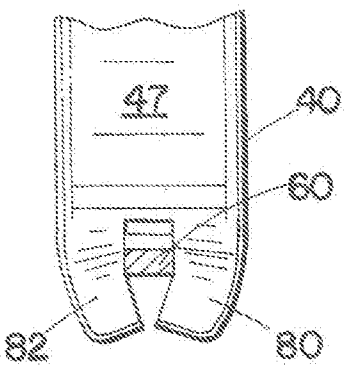

Fig. 25

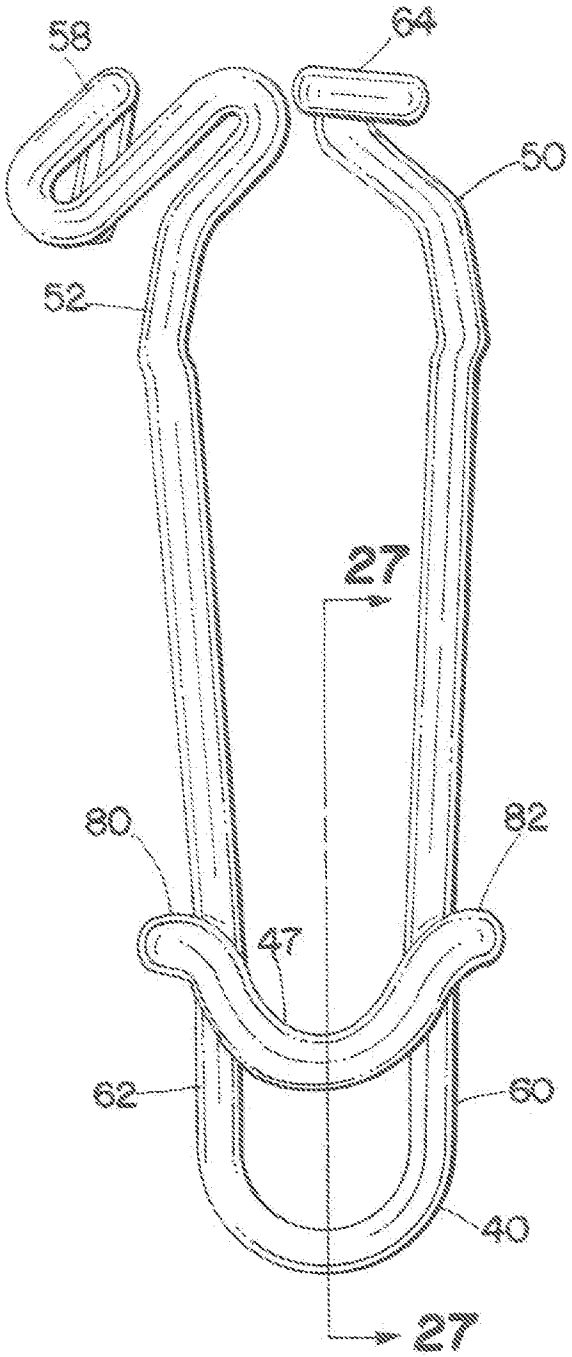

Fig.26

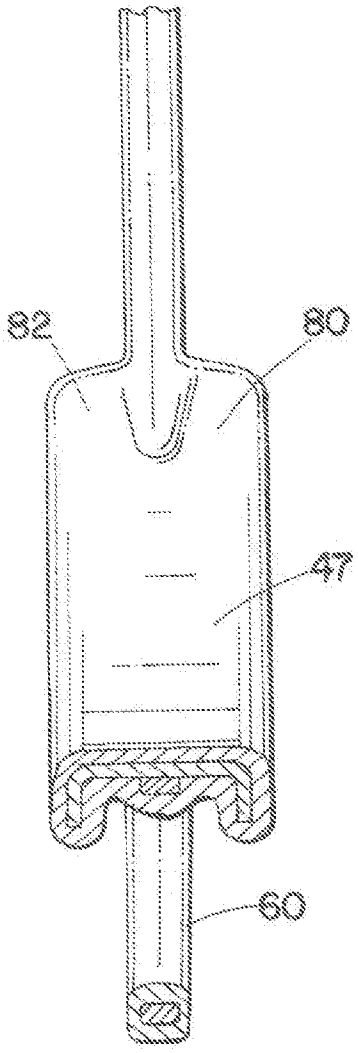

Fig.27

LOCKING CABLE HANGER AND METHOD OF USING

CROSS REFERENCE TO RELATED APPLICATION

This application is a continuation application of and claims priority to U.S. patent application Ser. No. 15/662,474, filed Jul. 28, 2017, which claims priority to U.S. patent application Ser. No. 14/556,117, filed Nov. 29, 2014, now U.S. Pat. No. 9,722,405, issued Aug. 1, 2017.

BACKGROUND OF THE INVENTION

This invention has to do with a locking cable hanger system for use in the solar, mining, and electrical industries. In solar, mining, and electrical industries there is a need for electrical cables to extend from a power or signal source to a location of application. Such cables are usually supported by a messenger wire that are themselves independently structurally supported and strung along the planned cable route. In solar plants, direct current wires attach first to the solar panels and then run to combiner boxes before extending further to power inverters. In addition, alternating current power cables are used to power the motors that control the trackers, devices that rotate the solar panels to follow the sun in order to obtain maximum power during daylight hours.

Prior to 2014, AC and DC cables could be bundled immediately adjacent to, and touching, one another in a wire management system for the solar panels. In the new National Electric Code of 2014, the AC and DC cables must not be immediately adjacent to one another, but must have a degree of separation from one another. Power carrying cables have a tendency to induce errors or interfere with the signal wires that are located in close proximity to them. This new requirement also applies to other applications outside the solar power industry, such as the mining and electrical industries.

Because of the increased use of trackers in solar power plants, there is increased use of category five cables and other data wiring. This type of control wiring is used to give power plant operators feedback from the solar power plant array on what angles the panels are stationed, and what the proper angle should be to maximize power output from the sun. This data and information is constantly monitored to obtain maximum power output from the thousands of solar panels in the solar power plant. The type of wiring used in collecting data is sensitive to cables used for AC and DC power and because of that sensitivity, data wiring cannot be bundled with power cables and must be supported by a separate carrier that is at least one inch away from all power cables.

In solar power plants, mining and other electrical applications, there are various sized wires and bundles of wires with an almost unlimited variety of wire bundle sizes. Bundle size is becoming very important in the manufacture of hangers to accommodate these various sizes, especially in multiple carrier hangers.

The cable hanger has a unique locking arm attachment section which has a closed loop spiral for a secure lock on the messenger wire. In the past, hangers had open loops or modified open loops on the top attachment section which could easily fall off if the hanger were bumped or hit during the wire loading process. In a solar plant there is a recent move to tracker systems which utilize more wiring than previously fixed in place systems. There is also the new NEC

code which went into effect Jan. 1, 2014, which states that all AC and DC wiring must now be separated in any hanging or support system. Because of these changes, the wire management systems are much more complex, especially given the vast number of wires involved in a utility scale solar power plant. With these changes, the hangers are initially installed on the messenger wire with a captive top spiral loop, and the bundles of cables are loaded separately in the carrier or carriers of the hanger. This process continues until all individual cables and bundles of cables are supported in the hangers. In the process of loading cables, the hangers are constantly bumped and jostled as they are loaded with bundles of cables. All styles of hangers presently on the market can easily fall off the messenger wire because they are only hanging by one open loop, and they can fall off when bumped during cable installation. Cambria County's Association for The Blind And Handicapped ("CAB") is a new and improved captive locking arm designed to securely grip the messenger wire so the cable hangers stay in position during the entire loading process and will not fall off when bumped or knocked. After all cables are loaded, the other top attachment end of the cable hanger is then squeezed and locked on the messenger wire.

The new NEC code requires any cable support system to have supports that are spaced at no greater than twelve-inch intervals. This applies to cable trays, hangers or all other types of cable support systems. The old-style hangers with their open style loops can fall off easily during installation and also easily slide out of their twelve-inch spacing when loading the cables. This is a more serious problem when you consider that there are tens of thousands of hangers being installed in the desert heat which can reach 120 degree F. Any wasted labor is a high additional cost in this environment. The new unique captive closed loop locking arm on CAB's cable hangers securely retains the hanger in place even when bumped or knocked around during the cable installation process. This improved captive engagement will also keep cable hangers securely in position on the twelve-inch centers and eliminate the need to reposition hangers on twelve-inch centers after all cables have been loaded into the carriers of the hangers.

A major factor affecting labor costs during installation of cables is how easily the electrician can load the cables and bundles of cables in the hangers in the stifling heat of the desert where solar power plants are usually located. All styles of cable hangers presently on the market will easily swing from side to side as they are initially suspended on the messenger wire. This means an electrician must take one hand and properly align the hanger in a 90 degree perpendicular orientation to the messenger wire in order to load the cables or bundles of cables in the hanger with the other hand. This two handed process of aligning the hanger increases the time necessary to load cables over the thousands of feet of messenger wire with the hangers on twelve-inch centers. The newly designed captive top locking arm of the CAB cable hanger addresses this problem by always maintaining the hanger at a 90 degree orientation to the messenger wire on initial installation. The newly designed top locking arm totally eliminates any lengthwise swinging or traveling movement from side to side and allows the electrician to use both hands for the loading of cables and cable bundles. The new design feature will save many hours of labor in the field and improve efficiency by maintaining twelve-inch centers on the messenger wire when installing all types of cables or cable bundles.

The secure gripping top locking arm is a major improvement in hangers which can save hundreds of hours of labor

on a large scale solar power plant; it greatly improves the efficiency of electricians and the quality of cable installations. Three major advantages of the new secure top locking installation arm are: the elimination of hangers falling off the messenger wires during loading, maintaining hangers at the proper orientation to the messenger wire for ease of cable loading, and maintaining the cable hanger on the messenger wire at the specified spacing for improved quality and speed of installation

BRIEF SUMMARY OF THE INVENTION

This invention has to do with a locking cable hanger and multiple cable carriers or saddles on one hanger.

The arrangement according to the present invention comprises a flexible wire of shape retention material formed so as to have an elongated u-shaped configuration forming a pair of spaced apart side arms extending from a closed configuration on one end to an open configuration on the other end. Cable supports (saddles) extend across the space between the side arms with co-operating elements of support and attachment between the cable supports and the side arms to support the cable supports on the wire hanger between the side arms. Attachment sections are formed on each of the open ends of the spaced apart arms with the attachment sections being elastically shape resilient and flexible so as to be bent together for attachment to a messenger wire. The attachment sections comprise two loops, one of which wraps around the messenger wire to effectively lock it in place and the other an open loop which simply latches onto the messenger wire. Installation involves twisting the locking arm around the messenger wire to secured it in place, then squeezing the cable hanger from both sides to a point when the second loop goes past and under the messenger wire so when it is raised and released, the second loop forcefully engages the messenger wire.

This locking hanger and saddle system can have one to five individual separate saddles or cable supports arranged in either a vertical or horizontal configuration. The saddles can attach to the cable hanger in a variety of positions to provide a greater support area for cables and to allow for the separation of cable bundles. One cable hanger can include one to five saddles to accommodate up to five cables or bundles of cable separately. In the vertical design, the saddle can lay on the bottom of the ring or through a wire form retention designed to be attached anywhere from the bottom of the ring to the top of the ring. In this manner of construction, the spacing distance between the saddles can vary to any size to accommodate any size cable or cable bundle. In the horizontal design the saddle would lay on the bottom of the hanger for additional cable support.

The locking saddle and hanger assembly according to the present invention also includes the option of an integrated closed loop on the top of the hanger which is used to safely hold category five cables or other small wiring in an area separate and has a good distance from the bundles of power cables. In this manner of construction, the more sensitive fiber-optic or control wires are retained in a separate carrier at least one-inch from the bundles of power cables in the horizontal or vertical design of this cable ring in saddle arrangement. The distance of separation will ensure there is no signal strength loss or interference on the category five cables from the power cables.

The saddle and hanger system according to the present invention also includes the option of a total or partial coating of PVC, plastisol, or other style coating on the saddle and hanger assembly. The PVC coating is a high dielectric grade and flame retardant. The coating has UV inhibitors for the more demanding environments of solar power plants in desert locations and for improved performance and highly corrosive environments. The total PVC coating on the cable hanger assembly provides additional corrosion resistance and protection of cables; it also add stability by providing a more secure grip of the top attachment loops to the messenger wire. A totally PVC coated single or multiple cable ring and saddle assembly is also easier to handle and install with a heavy 50 to 100 mil inch thick PVC coating over the entire surface. This coating helps to retain all saddles in a fixed position which eliminates the chance of loose saddles moving out of position during installation. The PVC coating is 50 to 100 mils inch thick which also has the added benefit of providing cushioning for the hands when squeezing in installing the cable hanger on the messenger wire. This benefit improves efficiency by allowing more cable hangers to be installed and significantly reduces the fatigue factor of the hand.

Materials used for the cable hangers include high tensile spring steel such as class 50 galvanized steel, copper clad steel, or type 316 stainless steel. Material can be 0.125 to 0.250 inch diameter high tensile spring steel, round or rolled flat wire form. This high quality material provides maximum strength with a smooth, flat surface for the support of cables and rounded edges for the protection of cable jackets.

OBJECTS OF THE INVENTION

It is an object of the present invention to provide a cable support system that can be easily installed and remain captive on the messenger wire during installation of cables thereby improving efficiency of labor in the solar, mining, and electrical industries.

It is the object of the present invention to provide a cable support system that maintains the position of the hanger at a specified spacing on the messenger wire to improve the quality and efficiency of cable installations.

It is an object of the present invention to provide a cable support system that will consistently maintain a cable hanger in the proper 90 degree orientation to the messenger wire for ease of loading cables and cable bundles by electricians.

It is an object of the present invention to provide a new safe and more efficient hanger system for the solar, mining, and electrical industries.

It is an object of the present invention to provide a new multiple cable hanger system for the solar, mining, and electrical industries.

It is an object of the present invention to provide a new hanger system that greatly reduces installation labor time for the solar, mining, and electrical industries.

It is a further object of the present invention to provide a more organized system to support cables in the solar, mining, and electrical industries.

It is a further object of the present invention to provide a cable support system that provides a safer, secure, strong, and effective separation of cables and wires so as to protect the electrical performance of cables in the solar, mining and electrical applications.

It is a further object of the present invention to provide a stronger, more corrosion resistant cable management system for the solar, mining, and electrical industries.

It is a further object of the present invention to provide a more flexible cable management system for multiple bundles of cables of different sizes for the solar, mining, and electrical industries.

It is a further object of the present invention to provide a safer cable management system for communication, control and electrical cables for the solar, mining, and electrical industries.

BRIEF DESCRIPTION OF DRAWINGS

FIG. **1** is an environmental perspective showing one end of the hanger according to the present invention engaged on a cable.

FIG. **2** is an environmental perspective showing the fully mounted hanger according to the present invention.

FIG. **3** is a perspective showing a double carrier hanger according to the present invention.

FIG. **4** is a front view of a hanger according to the present invention.

FIG. **5** top view of a hanger according to the present invention.

FIG. **6** is a bottom view of the hanger according to the present invention.

FIG. **7** is left end view of a hanger according to the present invention.

FIG. **8** is right end view of a hanger according to the present invention.

FIG. **9** is a fragmentary view showing the first position in mounting a hanger according to the present invention.

FIG. **9***a* is another fragmentary view showing the first position in mounting a hanger.

FIG. **10** is a fragmentary view showing the second position in mounting a hanger according to the present invention.

FIG. **11** is a fragmentary view showing the final position in mounting a hanger according to the present invention.

FIG. **12** is a cross-section of the hanger according to the present invention taken on the line **12-12** from FIG. **11**.

FIG. **13** is a top view of the hanger according to the present invention device mounted on a cable and supporting another cable.

FIG. **14** is a perspective view of an uncoated, vertically mounted double carrier hanger according to the present invention.

FIG. **15** is a perspective view of a PVC coated, vertically mounted double carrier hanger according to the present invention.

FIG. **16** is a left end view of an uncoated, vertically mounted hanger according to the present invention.

FIG. **17** is a front view of an uncoated, vertically mounted hanger according to the present invention.

FIG. **18** is a cross-section taken on the line **18-18** of FIG. **17** of the hanger according to the present invention.

FIG. **19** is a bottom view of an uncoated, vertically mounted hanger according to the present invention.

FIG. **20** is a front view of an uncoated, vertically mounted hanger according to the present invention.

FIG. **21** is a fragmentary side view showing the crimp in the legs of the hanger according to the present invention that keeps the saddle in place.

FIG. **22** is a cross-section taken on the line **22-22** of FIG. **21** of the hanger according to the present invention.

FIG. **23** is a diagrammatic view showing various permutations of vertical and horizontal hangers according to the present invention.

FIG. **24** is a fragmentary side view showing the crimp-locking method of keeping a hanger according to the present invention in place

FIG. **25** is a fragmentary cross-section taken on the line **25-25** of FIG. **24** of the hanger according to the present invention.

FIG. **26** is a front view of a coated, single mount hanger according to the present invention.

FIG. **27** is a fragmentary cross-section taken on the line **27-27** of FIG. **26** of the hanger according to the present invention.

DETAILED DESCRIPTION OF DRAWING

Shown in FIG. **1** is an environmental perspective showing a hanger **10** according to the present invention. The hanger **10** has a spiral gripper **24** that is engage with the messenger wire **12**. The hanger **10** is formed of a wire **14** that has opposing ends **11** and **13** that has been bent into a U-shaped configuration to form at least one (one to sometimes five) cable carrier formations **16**, **17** with a cable carrier divider **18** separating cable carrier formations **16** and **17**. The hanger **10** has shoulders **20** and **22** that extend towards each other from the lateral opposing sides **30** and **32** of the hanger **10**. Formed on the distal end of shoulder **22** is the spiral gripper **24** that engages the messenger wire **12**. Formed on the distal end of shoulder **20** is the locking hook **26** that has the data carrier loop **28** formed on its distal end. The cable carrier formations **16**, **17** are of the same or different widths so that different cable sizes may be loaded onto the hanger **10** prior to it being locked in place. A similar hanger **10** is shown further down the messenger wire **12** to show how the cable may be loaded into several hangers prior to the top locking loop **26** being engaged with the messenger wire **12**. The wire **14** used for the hanger **10** is selected from the group consisting of round or flat rolled galvanized or stainless steel spring material. The wire **14** will have a shape memory retention property so as to provide a locking force when both the spiral gripper **24** and the locking hook **26** are engaged with the messenger wire **12**. In order to fully engage the hanger **10** with the messenger wire **12** lateral sides **30** and **32** must be squeezed so that shoulders **20** and **22** come towards each other and the locking hook **26** comes under the messenger wire **12** so that when the squeezing of the hanger **10** is released the locking hook **26** will engage the messenger wire as is more formally shown in FIG. **2**.

FIG. **2** is an environmental perspective view showing the hanger **10** fully mounted on the messenger wire **12**. The spiral gripper **24** is engaged with the messenger wire **12** and the locking loop **26** is also fully engage with the messenger wire **12**. The spiral gripper **24** has at least two interference abutment surfaces that will but with messenger wire **12** to hold the hanger **10** in place on the messenger wire **12**. The locking loop locking hook **26** has at least one abutment surface that engages the messenger wire **12** and it is the spring force exerted by the wire material that urges shoulders **20** and **22** apart and causes a locking force to be exerted between the abutment surface on locking hook **26** and the two abutment surfaces on the spiral gripper **24**.

FIG. **3** is an enlarged perspective view of the hanger **10** according to the present invention as it is attached to the messenger wire **12**. The hanger **10** is shown having to cable carrier formations **16**, **17** with cable divider **18** shown separating the carrier formations **16**, **17**. Shoulders **20** and **22** are shown extending towards one another from the lateral sides **30** and **32** of the hanger **10**. Formed on the distal end is a spiral gripper formation **24** that terminates in end **13** of the wire **14** that is used to form the hanger **10**; the spiral gripper formation **24** and has at least two messenger wire abutment surfaces as is shown at **34**, **36** such that when the locking hook **26** is engaged with the messenger wire **12** the abutment surface surfaces **34** and **36** on the spiral gripper **24** will engage the messenger wire **12** in such a way as to

prevent sliding movement along the messenger wire **12**; the locking hook **26** has its distal end **11** and formed on that distal end is a data carrier loop **28** for carrying the data information wire along the same path as the messenger wire. What is important is that the hanger **10** provides a sufficient separation between both cable carrier formations **16**, **17** and a further sufficient separation between the two carriers formations **16**, **17**, and the data carrier loop **28** as can be seen when engaged the shoulders **20**, **22** have been compressed, preferably by an installer and gripping the outer and squeezing them such that the locking hook **26** and data carrier loop **38** have gone under the messenger wire **12** and then are raised so that when the spring wire **14** is released the locking hook **26** then has an abutment surface **38** that firmly engages the messenger wire **12** and creates a locking force on the messenger wire **12** between the abutment surfaces **34**, **36**, and **38**.

What is shown in FIG. **4** is a side view of the hanger **10** according to the present invention. The hanger **10** has a first cable carrier formation **16** and a second cable carrier portion **17**. The cable carrier formations **16**, **17** are located immediately adjacent to one another with a cable carrier divider **18** located between the two cable carrier formations **16**, **17**. Lateral sides **30** and **32** are shown on the hanger **10** with lateral sides having shoulders **22** and **20** that extend from the upper end of the lateral sides **30** and **32** towards one another. The distal end of the shoulder **22** has the spiral wound gripper **24** formed thereon with the wire end **12** shown therein. The shoulder **20** extends from the lateral side **32** and forms the locking hook **26** which has at its distal end the data carrier loop **28**, the opposing ends **11** of the wire **14** shown therein.

What is shown in FIG. **5** is a top view of the hanger **10** according to the present invention. The data carrier wire formation **27** is shown formed at the end of the locking hook **26**. The top of the cable carrier divider **18** is shown separating the cable carrier formations **16**, **17**. The shoulder **22** is shown extending out to the spiral gripper **24**.

What is shown in FIG. **6** is a bottom view of the hanger **10** according to the present invention. The cable carrier divider **18** is shown dividing the cable carrier formations **16** and **17** with the spiral gripper **24** and the data carrier loop **28** shown formed thereon.

Shown in FIG. **7** is a left end view of the hanger **10** according to the present invention. The hanger **10** is shown with the cable carrier divider **18** dividing the cable carrier formations **16**, **17**, the shoulders **22**, **20** shown leading to the spiral gripper **24** and forming the locking loop locking hook **26**. The locking hook **26** has the data carrier loop **28** formed thereon.

What is shown in FIG. **8** is a right end view of the hanger **10** according to the present invention. The hanger **10** is shown for the cable carrier divider **18** dividing the carrier formations **16**, **17** with a shoulder **22** leading up to the spiral gripper **24** and showing the opposing end **13** of the wire **14**. Also shown is the shoulder **20** that leads up to the locking hook **26** which has the data carrier loop **28** formed on its distal end.

What is shown in FIGS. **9** and **9**A is a fragmentary view showing the first position of engaging the hanger **10** with the messenger wire **12**. The shoulder **22** of the hanger **10** is held closely adjacent to the messenger wire **12** and the spiral gripper **24** is placed down over the messenger wire with the end **13** to the far side of the messenger wire **12**. FIG. **9** shows this result more clearly that the end **13** of the spiral gripper **24** is now at or below the level of the messenger wire **12** and the spiral gripper **24** is mounted on the messenger wire **12**

What is shown in FIGS. **10-12** is a view of the hanger **10** as originally shown in FIGS. **9** and **9**A but with the shoulder **22** having been pushed under the messenger wire **12**, to the opposite side of the messenger wire **12**, and has rotated the end **13**, also under the messenger wire **12**, and end **13** is now projecting on the other side as is shown in FIG. **12** in this manner to captively hold the hanger **10** on the messenger wire **12**.

FIG. **11** is a fragmentary view showing the final position in mounting a hanger according to the present invention. Shown in FIG. **11** is the messenger wire **12** having the hanger **10** actually hanging on the messenger wire **12**; the spiral gripper **24** is shown surrounding the messenger wire **12** of its end **13** pointing upward.

FIG. **12** is a top view of the hanger **10** according the present invention on the messenger wire **12**.

FIG. **13** is a top view of the hanger **10** according to the present invention, with the hanger mounted on the messenger wire **12** and supporting the data carrier wire **38**. As is shown in FIG. **13**, messenger wire **12** has a hanger **10** firmly held in place by the spiral gripper **24** and the locking hook **26** firmly engaged with the messenger wire **12**. The previous steps in the above FIG. **10** maneuvered the shoulder **22** such that the spiral gripper **24** was placed on the messenger wire **12**. Cables have been loaded into the cable carrier and the locking loop **26** was brought through and under the messenger wire **12** and then released. Once released, the shape memory material would cause the wire to spring back to its initial state and engage the messenger wire **12**. Shown opposite the spiral gripper **24** and the locking hook **26**, is the data carrier loop **28** carrying the data wire **38**.

FIG. **14** is a perspective of an alternate hanger **40** according to the present invention. What is shown in FIG. **14** is an alternate hanger **40** that is made of a wire **44** that is either round or flat rolled stainless steel, or flat rolled galvanized steel, that has been formed in the U-shaped configuration having upper shoulders **50**, **52** that extend from lateral sides **60** and **62** of the U-shaped formation. On the end of shoulder **52** is spiral gripper **64** that engages the messenger wire **12**. The wire has an ends **41**, **43** as shown in FIG. **14**. The data wire **38** is shown engaging the data carrier loop **58**. The hanger **40** has a spiral gripper **64** and a locking loop **56** that engages the messenger wire **12** to hold a hanger **40** firmly in place. Cable carrier saddles **46** and **47** are shown engaged with and supported from lateral sides **60** and **62**. The saddles **46** and **47** each have opposing ends **70** and **72** with separate ear formations **80** and **82** formed thereon. The separate ear formations **80** and **82** have a slot formed that fits around the lateral side **60** of the hanger **40**. The ears **80** and **82** are then crimped towards one another so as to permanently hold the saddles **46** and **47** in place on each lateral side **60** and **62** of the hanger **40**. As will be seen later the lateral sides **60** and **62** of the U-shaped formation of the hanger **40** may be bent inwardly at the junctures with a side **70**, **72** of the saddles **46** or **47** so as to better support the cable saddles on the hanger **40**.

FIG. **15** is a perspective of two alternate hanger's **100** according to the present invention. Shown in FIG. **15** are hangers **100** that are attached to a messenger wire **12** and carry data wire **38**. The hangers **100** are formed of a wire **102** that has been bent in the U-shaped formation to have to have lateral sides **104** and **106**, the lateral sides **104** and **106** each have, respectively, upper shoulders **108** and **110**. The upper shoulder **108** ends with a spiral gripper **112** with the end of the wire shown at **103**. The spiral gripper **112** is shown engaging the messenger wire **12**. The upper shoulder **110** of hanger **100** has a locking loop **114** with a data carrier loop

116 formed thereon, the end of the wire on the lateral shoulder side 106 is labeled 101. Hangers 100 are coated with a plastisol coating that has a high flame retardant, high UV resistance, and high dielectric value. Saddles 116, 118 are shown with ends 120 and 122 attached to the lateral sides 104 and 106 of the one hanger 100; cables 130 and 132 are shown as they would be placed and suspended by the hangers 100.

Shown in FIG. 16 is the alternate hanger 40 shown in a side view. The alternate hanger 40, shows the lateral side 60 with the saddles 46 and 47 attached to the lateral side 60. The saddles 46, 47 have ears 80, 82 formed upon each of the saddles 46 and 47 such that the slot 84 engages the lateral side 60 of the hanger 40 is shown having upper shoulders 50, 52 with the shoulder 52 having a spiral gripper 64 shown thereon and the data carrier loop 58 shown at the end of shoulder 50. Shown in FIG. 17 is a front view of the hanger 40 shown in FIG. 16 with the data carrier loop shown at 58 and spiral gripper shown at 64, saddles 46 and 47 are shown attached to the lateral sides 60 and 62 of the hanger for the U-shaped hanger 40.

FIG. 17 is a front view of an uncoated, vertically mounted hanger 100 according to the present invention. In FIG. 17 each of the lateral side 60 and 62 is shown being bent inward at 65 so as to add an additional support from the lateral sides 60 and 62 to the bottom of the saddle 46 while the ears 80 and 82 will be crimped around the lateral side 60 and 62 of the U-shaped hanger 40. The additional bands at 65 of the lateral sides 60 and 62 will add support to the carrier 46 when a cable is loaded into the top of saddle 46. FIG. 18 is a cross-section taken on the line 18-18 of FIG. 17 of the hanger 40 according to the present invention, shown in FIG. 18 having the ears 80 and 82 engaged with the lateral side 60 and 62 of the hanger 40.

FIG. 19 is a bottom view of an uncoated, vertically mounted hanger 40 according to the present invention.

FIG. 20 is a front view of an uncoated, singly mounted hanger 40 according to the present invention. The hanger 40 shown in FIG. 20 has U-shaped lateral sides 60, 62: a single saddle 46 between the lateral side 60, 62; the data carrier loop 58 is shown formed on the upper shoulder 52 with the spiral gripper 64 shown in the upper part of shoulder 50.

FIGS. 21 and 22 show the bends in the lateral side 60 and 62 that is used to hold the saddle 47, on the lateral sides 60 and 62 is a fragmentary side view showing the crimp in the legs of the hanger 40 according to the present invention that keeps the saddle in place.

FIG. 22 is a cross-section taken on the line 22-22 of FIG. 21 of the hanger according to the present invention.

FIG. 23 is a diagrammatic view showing various permutations of vertical and horizontal hangers according to the present invention. As can be seen in FIG. 23 it is within the contemplation of this invention that whether the hangers 10, 40 or 100 are furnished with the spiral gripper and locking hook there are many configurations of vertical and horizontal saddle or carry arrangements that can be utilized with this type of locking hanger. The upper part of FIG. 23 shows that a vertically oriented hanger can have saddle supports of one, two, three or more, that can be attached to a cable messenger wire. The lower part of FIG. 23 shows that the horizontal carrier formations 16 and 17 may be formed using a single carrier formations 16, double carrier formations 16, 17 or a triple or more carrier formation of 1617 and 19. Each of the carrier formations 16, 17 will have a carrier divider 18 formed between each of the carrier formations. Horizontal oriented hangers can have one, two, or three, or more cable carriers.

FIGS. 24 and 25 are a fragmentary side view of a hanger 40 showing the crimp-locking method of keeping a saddle supported in place according to the present invention. Shown in FIG. 24 is a saddle 47 with the ears 80 and 82 shown crimped around the lateral side 60 of the hanger 40.

FIG. 25 is a fragmentary cross-section taken on the line 25-25 of FIG. 24 of the hanger 40 according to the present invention.

FIG. 26 is a side view of a coated, single mount hanger 40 according to the present invention.

FIG. 27 is a fragmentary cross-section taken on the line 27-27 of FIG. 26 of the hanger according to the present invention.

The invention claimed is:

1. A solar plant comprising:
- a plurality of solar panels;
- a plurality of conductive cables, each conductive cable electrically connected to, and extending from, a respective number of solar panels of the plurality of solar panels;
- a messenger wire extending from the plurality of solar panels; and
- a plurality of cable hangers engaged with, and spaced along, the messenger wire, each cable hanger comprising:
  - a top portion engaged with the messenger wire; and
  - a plurality of cable carrying surfaces, each cable carrying surface supporting a corresponding conductive cable of the plurality of conductive cables, wherein the plurality of cable carrying surfaces are disposed in a vertical arrangement such that the conductive cables are positioned by the cable hanger in a corresponding vertical arrangement.

2. The solar plant of claim 1, wherein the top portion of each cable hanger comprises a hook structured to at least partially encircle the messenger wire.

3. The solar plant of claim 1, wherein each cable carrying surface is of a different width.

4. The solar plant of claim 1, wherein the plurality of cable carrying surfaces comprise at least three cable carrying surfaces disposed in the vertical arrangement.

5. The solar plant of claim 1, wherein the plurality of cable carrying surfaces comprises at least four cable carrying surfaces disposed in the vertical arrangement.

6. The solar plant of claim 1, wherein the plurality of cable carrying surfaces comprises at least five cable carrying surfaces disposed in the vertical arrangement.

7. The solar plant of claim 1, further comprising a number of pieces of electrical equipment electrically connected to one or more of the conductive cables so as to be electrically connected to one or more of the plurality of solar panels.

8. The solar plant of claim 1, wherein, when the top portion is engaged with the messenger wire each cable carrying surface is sized and configured to continuously extend under a conductive cable supported thereon from a first side of the conductive cable supported thereon to an opposite second side of the conductive cable supported thereon.

* * * * *