ARMY TM 5-684
NAVY NAVFAC MO-200
AIR FORCE AFJMAN 32-1082

TECHNICAL MANUAL

FACILITIES ENGINEERING
ELECTRICAL EXTERIOR FACILITIES

APPROVED FOR PUBLIC RELEASE: Distribution is unlimited

DEPARTMENTS OF THE ARMY, THE NAVY, AND THE AIR FORCE
29 November 1996

REPRODUCTION AUTHORIZATION/RESTRICTIONS

This manual has been prepared by and for the Government and, except to the extent indicated below, is public property and not subject to copyright.

Copyrighted material included in the manual has been used with the knowledge and permission of the proprietors and is acknowledged as such at point of use. Anyone wishing to make further use of any copyrighted material, by itself and apart from this text, should seek necessary permission directly from the proprietors.

Reprints or republication of this manual should include a credit substantially as follows: "Joint Departments of the Army, the Navy and the Air Force, TM 5-864/NAVFAC MO-200/AFJMAN 32-1082."

If the reprint or republication includes copyrighted material, the credit should also state: "Anyone wishing to make further use of copyrighted material, by itself and apart from this text, should seek necessary permission directly from the proprietor."

Tables 13-l and 16-1 are reprinted from table 2 of IEEE Std 18-1992 and table 11.1 of IEEE Std 519-1992 respectively.

Copyright © 1993 by the Institute of Electrical and Electronics Engineers, Inc. The IEEE disclaims any responsibility or liability resulting from the placement and use in this publication. Information is reprinted with the permission of the IEEE.

TECHNICAL MANUAL No. 5-684
NAVY PUBLICATION NAVFAC MO-200
AIR FORCE JOINT MANUAL No. AFJMAN 32-1082

HEADQUARTERS
DEPARTMENTS OF THE ARMY,
THE NAVY, AND THE AIR FORCE
WASHINGTON, D.C. *29 November 1996*

ELECTRICAL EXTERIOR FACILITIES

	Paragraph	*Page*
CHAPTER 1. INTRODUCTION		
SECTION I-PRIMARY CONSIDERATIONS		
Purpose and scope	1-1	1-1
References	1-2	1-1
Application of codes and publications.	1-3	1-1
Standardsofmaintenance	1-4	1-1
Maintenance responsibilities.	1-5	1-1
Maintenance records	1-6	1-2
Priority and scheduling	1-7	1-2
SECTION II-SAFETY		
Minimizinghazards	1-8	1-3
Qualification of electric workers.	1-9	1-3
Certification of electric workers	1-10	1-3
Publicsafety	1-11	1-3
Personnel safety	1-12	1-3
Live-linemaintenance	1-13	1-3
SECTION III-AVOIDING PROBLEMS		
Operating conditions	1-14	1-4
Detecting potential trouble	1-15	1-4
Electrical connections	1-16	1-4
CHAPTER 2. INSPECTION AND TESTS		
SECTION I-PERFORMANCE		
Determining equipment condition	2-1	2-1
Reasons for inspections and tests	2-2	2-1
Associated test guidance and records.	2-3	2-1
SECTION II-REQUIREMENTS		
Electric workers, instruments, and reports	2-4	2-2
Frequencyofinspection..	2-5	2-2
CHAPTER 3. TRANSMISSION AND DISTRIBUTION SUBSTATIONS		
SECTION I-GOVERNING CONSIDERATIONS		
Typeofsubstationscovered	3-1	3-1
Electrical system relationships.	3-2	3-1
Substation safety concern	3-3	3-1
Substation security	3-4	3-1
Periodic inspections of substations	3-5	3-1
Visual inspections of substations	3-6	3-1
Infrared inspections of substations	3-7	3-1
SECTION II-STRUCTURE MAINTENANCE		
Importance of maintenance.....	3-8	3-2
Galvanized steel structure	3-9	3-2
Painted steel structures..	3-10	3-3
Aluminumstructures..	3-11	3-3
Wood structures	3-12	3-3
Concrete for structure foundations	3-13	3-3
Structure connections and joints	3-14	3-3
SECTION III-SUBSTATION YARDS		
Provisionofyards	3-15	3-3
Fences for yards..	3-16	3-3
Warningsignsatyards	3-17	3-3
Substation yards	3-18	3-3

This manual supersedes TM 5-684/NAVFAC MO-200/AFM 91-3, dated 20 April 1979

	Paragraph	Page
SECTION IV-INSULATORS		
Function of insulators	3-19	3-4
Testsofinsulators	3-20	3-4
Inspection and repair of insulators	3-21	3-4
Cleaningofinsulators	3-22	3-5
SECTION V-BUS STRUCTURES		
Definitionofbus structures	3-23	3-7
Maintenance of bus structures	3-24	3-7
Cleaningofbus structures	3-25	3-7
Testingofbus structures	3-26	3-7
SECTION VI-INSTRUMENT TRANSFORMERS		
Definitions of instrument transformers	3-27	3-7
Short-circuiting dangers.	3-28	3-7
Maintenanceofinstrumenttransformers..	3-29	3-7
Tests of instrument transformers	3-30	3-8
SECTION VII-BUSHINGS		
Definition of bushing	3-31	3-8
Type of bushings covered	3-32	3-8
Maintenanceofbushings	3-33	3-8
Bushingpowerfactortests	3-34	3-10
Bushing insulation resistance test.	3-35	3-12
CHAPTER 4. OVERHEAD DISTRIBUTION		
SECTION I-ASSOCIATED OVERHEAD DISTRIBUTION GUIDANCE		
Relevant overhead distribution guidance.	4-1	4–1
General construction guidance	4-2	4–1
SECTION II-DEFINING VOLTAGE NOMENCLATURE		
Voltage terminology	4-3	4–1
Voltagelevelclassification	4-4	4–1
Voltagedeliveryusage	4-5	4–1
Voltage origination point	4-6	4–1
Voltage terminology usage in this manual	4-7	4–4
SECTION III-TYPES OF MAINTENANCE		
Componentlinemaintenance	4-8	4-4
Other types of line maintenance	4-9	4-4
SECTION IV-WOOD POLES		
Lifespanofwoodpoles	4-10	4-4
Supplementary data on wood poles.	4-11	4-4
Wood pole record keeping and inspections	4-12	4-4
Wood pole maintenance crew instructions.	4-13	4-6
Wood pole spot inspection procedures.	4-14	4-6
Wood pole-by-pole inspection procedure.	4-15	4-7
Determination of wood pole adequacy	4-16	4-9
Woodpolereplacement	4-17	4-10
Woodpolereinforcement	4-18	4-10
SECTION V-CROSSARMS, BRACES, AND PLATFORMS		
Polecrossarms	4-19	4-11
Pole braces	4-20	4-12
Pole platforms	4-2 1	4-12
SECTION VI-MAINTENANCE WOOD PRESERVATION		
Initialwoodtreatment	4-22	4-13
In-place wood treatment above ground	4-23	4-13
Wood pole treatment at or below the ground line.	4-24	4-13
SECTION VII-METAL POLES		
Metalpoleusage	4-25	4-14
Distribution line metal poles	4-26	4-15
Transmission line metal towers	4-27	4-15
Pole-linemetalhardware	4-28	4-15
Paintingofmetalpoles	4-29	4-15

Affordable Wire Management, Exhibit No. EX1010
Case No. IPR2024-00182
Page 4 of 201

	Paragraph	Page
SECTION VIII-CONCRETE POLES		
Concrete pole overview	4-30	4-15
Concrete pole foundations	4-31	4-15
SECTION IX-OVERHEAD OPEN WIRE CONDUCTORS		
Overhead conductor construction.	4-32	4-16
Overheadconductormaterial	4-33	4-16
Overhead conductor covering	4-34	4-16
Overheadconductorsag	4-35	4-16
Overheadconductordamage	4-36	4-17
Overheadconductorrepairs	4-37	4-18
SECTION X-OVERHEAD CABLE		
Overhead cable construction	4-38	4-18
Overhead cable repair requirements.	4-39	4-18
SECTION XI-CONDUCTOR CONNECTIONS		
Overhead line conductor requirements.	4-40	4-18
Overhead line conductor splices.	4-41	4-19
Overhead line connections	4-42	4-20
Overheadline armor rods	4-43	4-22
SECTION XII-POLE-LINE INSULATORS		
Pole-line insulator related material.	4-44	4-22
Insulator operating performance..	4-45	4-22
Types of pole-line insulators...	4-46	4-22
Pole-line insulator class requirements	4-47	4-24
SECTION XIII-GUYS		
Guy functional requirements.	4-48	4-25
Guy strand	4-49	4-25
Anchor assemblies..	4-50	4-25
Guy attachments	4-51	4-26
Guystraininsulators	4-52	4-27
SECTION XIV-TREE TRIMMING		
Tree trimming objectives	4-53	4-29
Tree trimming clearances and climbing space	4-54	4-30
Tree trimming tool	4-55	4-31
Typesoftreetrimming	4-56	4-31
Tree trimming instructions..	4-57	4-32
Treating a tree trimming wound	4-58	4-32
Treeremovalmethods.....,	4-59	4-32
Tree killing chemicals	4-60	4-33
Poisonous plant	4-61	4-33
SECTION XV-LIVE-LINE MAINTENANCE		
Live-line maintenance requirements.	4-62	4-33
Categories of energized-line maintenance	4-63	4-33
Energized-linemethods	4-64	4-34
Live-line operations	4-65	4-34
SECTION XVI-AERIAL LIFT REQUIREMENTS		
Aerial lift construction	4-66	4-35
Aerial lift specifics	4-67	4-35
CHAPTER 5. UNDERGROUND AND SUBMARIK E CABLES		
SECTION I-ASSOCIATED GUIDANCE		
Relevant cable guidance	5-1	5-1
General construction guidance	5-2	5-1
SECTION II-SAFETY PRECAUTIONS		
Cablesafety	5-3	5-2
Structure safety	5-4	5-2
SECTION III-INSPECTION		
Frequency of underground system inspections.	5-5	5-3
Structureinspections	5-6	5-3
Cableinspections	5-7	5-3
Underground equipment inspections	5-8	5-3

Affordable Wire Management, Exhibit No. EX1010
Case No. IPR2024-00182
Page 5 of 201

	Paragraph	Page
SECTION IV-MAINTENANCE AND REPAIR OF DUCT SYSTEMS		
Structure maintenance and repair	5-9	5–4
Duct line maintenance and repair.	5-10	5–4
SECTION V-CABLE FAULTS AND FAULT LOCATIONS		
Cable faults..	5-11	5–4
Visual methods of cable fault locating	5-12	5–5
Determining type of cable fault	5-13	5–6
Cable fault locating test methods	5-14	5–6
Simplifying cable fault locating	5-15	5–7
Cable fault locating equipment.	5-16	5–7
Tracing the cable fault signal	5-17	5–9
Selecting cable fault locating methods.	5-18	5–9
SECTION VI-CABLE REPAIR		
Undergroundcablerepairs	5-19	5-10
Submarinecablerepairs	5-20	5-10
Cablerepairsafety	5-2 1	5-11
Makingcablerepairs	5-22	5-11
Solid dielectric cable repairs	5-23	5-12
Other cable insulation and covering repairs.	5-24	5-12
Othercablecomponentrepairs	5-25	5-13
SECTION VII-CABLE TESTING		
Cabletests	5-26	5-14
Cable insulation resistance tests	5-27	5-14
Cable overvoltage tests	5-28	5-15
Cable power factor tests	5-29	5-16
Cablemoisturetests	5-30	5-17
Cabletestrecords	5-31	5-17
SECTION IX-UNDERGROUND CORROSION CONTROL		
Importanceofcorrosioncontrol	5-32	5-18
Types of corrosion	5-33	5-18
Prevention of corrosion	5-34	5-18
CHAPTER 6. OUTDOOR LIGHTING		
SECTION I-LIGHTING AND CIRCUIT TYPES		
Outdoorlightinguse	6-1	6-l
Types of lighting circuits	6-2	6-l
SECTION II-MULTIPLE TYPE LIGHTING		
Multiple type lighting system components	6-3	6-l
Luminaires	6-4	6-l
Lamp types.	6-5	6-l
Luminaire components..	6-6	6-2
Luminairemaintenance	6-7	6-2
Multiple type lighting controls	6-8	6-3
SECTION III-LIGHT DISTRIBUTION		
Light distribution standards.	6-9	6–4
Roadway lighting	6-10	6–4
Floodlighting	6-11	6–4
Airfield lighting.	6-12	6–5
SECTION IV-SERIES TYPE AIRFIELD LIGHTING		
Series type lighting system components	6-13	6–6
Series type lighting control and protection	6-14	6-6
Series type lighting power supply equipment.	6-15	6-6
Maintenance and troubleshooting series type lighting.	6-16	6-7
CHAPTER 7. TRANSFORMERS AND REGULATORS		
SECTION I-CONSIDERATIONS		
Voltage provisions covered.~	7-1	7-l
Defining transformer and regulator characteristics	7-2	7-l
Transformerclassification..	7-3	
		7-l

Affordable Wire Management, Exhibit No. EX1010
Case No. IPR2024-00182
Page 6 of 201

	Paragraph	Page
SECTION II-MAINTENANCE		
Transformer inspection and maintenance frequencies.	7-4	7-2
Transformer inspections	7-5	7-3
Transformer testing guidance	7-6	7-6
Solid (winding) insulation tests	7-7	7-6
Transformer insulation liquids.	7-8	7-7
CHAPTER 8. OVERCURRENT PROTECTIVE AND SWITCHING DEVICES		
SECTION I-CONSIDERATIONS		
Circuit interrupting devices	8-1	8-1
Location of protective and switching devices	8-2	8-1
Protective and switching device instruction manuals	8-3	8-1
Protective and switching device records.	8-4	8-1
SECTION II-FUSES		
Fuseusage	8-5	8-1
Fuse operating safety considerations	~~8-6~~	8-2
Fuse replacement	8-7	8-2
Fuse maintenance	8-8	8-3
SECTION III-SWITCHES		
Switchusage	8-9	8-3
Operationofswitches	8-10	~~8-4~~
Switch maintenance	8-11	~~8-4~~
SECTION IV-CIRCUIT BREAKERS		
Circuitbreakerusage	8-12	8-6
Frequency of circuit breaker maintenance	8-13	8-6
Maintenance of nonmetalclad switchgear circuit breakers.	8-14	8-7
Maintenance of metalclad circuit breakers	8-15	8-10
Maintenance of low-voltage power circuit breakers	8-16	8-12
Repairofcircuitbreakers	8-17	8-12
SECTION V-MISCELLANEOUS DEVICES		
Circuit switchers	8-18	8-14
Automaticcircuitreclosers	8-19	8-14
CHAPTER 9. OVERVOLTAGE PROTECTION		
SECTION I-CONSIDERATIONS		
Overvoltage protection	9-1	9-1
Lightning-induced voltage surges	9-2	9-1
System operating voltage disturbances	9-3	9-1
Surge limiting protective device requirements.	9-4	9-1
SECTION II-SURGE (LIGHTNING) ARRESTERS		
Definition of a surge arrester	9-5	9-1
Typesofsurgearresters	~~9-6~~	9-1
Classification of surge arresters.	9-7	9-2
Maintenance of surge arresters	9-8	9-2
SECTION III-OTHER DEVICES		
Surgeshieldingdevices	9-9	9-2
Surge capacitors	9-10	9-3
Surgeprotectivegaps..	9-11	9-3
Surgebypassresistors	9-12	9-3
CHAPTER 10. GROUNDING		
SECTION I-CONSIDERATIONS		
Basic principles of grounding	10-1	10-1
Groundingprovisions	10-2	10-1
SECTION II-MAINTENANCE		
Groundingmaintenancesafety	10-3	10-1
Visual inspection of grounds	10-4	10-1
Galvanic corrosion of grounds.	10-5	10-2
SECTION III-TESTING		
Ground resistance tests	10-6	10-2
Groundvaluemeasurements	10-7	10-2

Affordable Wire Management, Exhibit No. EX1010
Case No. IPR2024-00182
Page 7 of 201

	Paragraph	Page
Methods of measuring ground resistances	10-8	10-2
Methods of reducing ground resistances	10-9	10-4
CHAPTER 11. RELAYS AND CONTROLS		
SECTION I--RELAYS, ELECTRIC POWER APPARATUS		
Relay functions	11-l	11-l
Relay fundamentals	11-2	11-l
Relay construction	11-3	11-l
Relaymaintenanceperiods	11-4.	11-2
Relaygeneralfieldinspection	11-5	11-2
Relay performance tests	11-6	11-3
Common electromechanical relay tests	11-7	11-3
Relaytestequipment	11-8	11-4
Relay repairs	11-9	11-5
SECTION II-CONTROLS		
Control functions	11-10	11-6
Preventive maintenance and inspections of controls	11-11	11-7
Troubleshootingcontrols	11-12	11-8
CHAPTER 12. INSTRUMENTS AND METERS		
SECTION I-CONSIDERATIONS		
Electrical instruments	12-l	12-1
Electricalmeters	12-2	12-1
Validity of electrical measurements	12-3	12-1
Fixed installations of instruments and meters	12-4	12-1
Portable instruments and meters	12-5	12-1
Inspections of instruments and meters	12-6	12-1
Tests of instruments and meters	12-7	12-1
SECTION II-PREVENTIVE MAINTENANCE		
Mounting of instruments and meters	12-8	12-2
Installation of instruments and meters	12-9	12-2
Maintenance of instruments and meters	12-10	12-2
SECTION III-CALIBRATION AND ADJUSTMENT		
Accuracy check of instruments and meters	12-11	12-2
Adjustment of instruments and meters	12-12	12-2
SECTION IV-REPAIRS		
Field repairs of instruments and meters	12-13	12-4
Shop repairs of instruments and meters	12-14	12-4
SECTION V-TROUBLESHOOTING		
Temperature influence on instruments and meters	12-15	12-5
Stray-field influence on instruments and meters	12-16	12-5
Calibration of instruments and meters	12-17	12-6
Other instrument and meter considerations	12-18	12-6
CHAPTER 13. POWER CAPACITORS		
SECTION I-CONSIDERATIONS		
Description of power capacitors	13-l	13-1
Types of power capacitors	13-2	13-1
Application of power capacitors	13-3	13-1
Permissible power capacitors dielectrics	13-4	13-1
SECTION II-MAINTENANCE AND INSPECTION		
Ensuring safe capacitor deenergizing	13-5	13-1
Power capacitor inspection schedule	13-6	13-1
Ventilation of power capacitors	13-7	13-1
Temperature influence on power capacitors	13-8	13-2
Exposure influence on power capacitors	13-9	13-2
Voltage influence on power capacitors	13-10	13-2
Fusesforpowercapacitors	13-11	13-2
SECTION III-TESTS		
Field tests for power capacitors	13-12	13-2
Terminal tests of power capacitors	13-13	13-3
Leak tests of power capacitors	13-14	13-3

Affordable Wire Management, Exhibit No. EX1010
Case No. IPR2024-00182
Page 8 of 201

	Paragraph	Page
CHAPTER 14. STORAGE BATTERIES		
SECTION I-CONSIDERATIONS		
Battery usage	14-1	14-1
Battery types	14-2	14-1
Battery safety	14-3	14-3
General battery maintenance procedures	14-4	14-4
SECTION II-FLOODED LEAD-ACID BATTERY MAINTENANCE		
Visual inspections of batteries	14-5	14-4
Measurements of battery condition.	14-6	14-6
Battery maintenance specifics	14-7	14-7
Testingofbatteries	14-8	14-8
SECTION III-FLOODED LEAD-ACID BATTERY CHARGING		
Battery charging precautions	14-9	14-9
Battery charging considerations	14-10	14-9
Normal floating battery charge	14-11	14-10
Equalizing battery charge	14-12	14-10
SECTION IV-VALVE-REGULATED LEAD-ACID CELL BATTERIES		
Valve-regulated cell differences	14-13	14-11
Charging or valve-regulated cells	14-14	14-11
Temperature compensation for valve regulated cells	14-15	14-11
SECTION V-Nickel-cadmium cell batteries		
Description of nickel-cadmium batteries	14-16	14-12
Requirements for nickel-cadmium batteries	14-17	14-12
SECTION VI-CHECKS AND TROUBLESHOOTING		
Inspectionsofbatteries	14-18	14-14
Troubleshooting batteries.	14-19	14-14
SECTION VII-BATTERY CHARGING EQUIPMENT		
Batterychargingrequirement	14-20	14-14
Rectifier type battery chargers	14-21	14-15
Accessories for battery chargers	14-22	14-15
Maintenanceofbatterychargers	14-23	14-15
SECTION VIII-PLACING A NEW BATTERY IN SERVICE		
Placing lead-acid batteries in service	14-24	14-16
Placing nickel-cadmium batteries in service.	14-25	14-16
Connections for batteries	14-26	14-16
SECTION IX-PUTTING A BATTERY IN STORAGE		
Batterystorageprocedure	14-27	14-17
Periodic check of a stored battery	14-28	14-17
SECTION X-REPLACEMENT AND DISPOSAL		
Replacementofa battery	14-29	14-17
Disposal of batteries..	14-30	14-17
CHAPTER 15. TOOLS AND EQUIPMENT		
SECTION I-USE		
Electrical tools and equipment standards	15-1	15-1
Tools and equipment classification	15-2	15-1
Tools and equipment safe use	15-3	15-1
SECTION II-HAZARDOUS MATERIAL PROCEDURES		
Hazardous substances	15-4	15-1
Asbestos containing materials	15-5	15-1
Polycholorinated biphenyl (PCB) insulated equipment	15-6	15-2
Sulfur hexifluoride (SF,) insulated equipment.	15-7	15-2
Chemicals used for outside maintenance.	15-8	15-2
SECTION III-PROTECTIVE EQUIPMENT		
Protective electrical rubber goods	15-9	15-2
Helmets for electrical work	15-10	15-3
Barrier protection for electrical work	15-11	15-3
Visual warnings for electrical work.	15-12	15-3
Protective grounding of deenergized lines.	15-13	15-3

Affordable Wire Management, Exhibit No. EX1010
Case No. IPR2024-00182
Page 9 of 201

	Paragraph	Page
SECTION IV-CLIMBING EQUIPMENT		
Body belts, climber straps, and safety straps	15- 14	15-4
Climber gaffs	15-15	15-5
Ladders for electrical work	15-16	15-5
SECTION V-LIVE-LINE TOOLS		
Certification of live-line tools	15-17	15-6
Careoflive-line tools	15- 18	15-6
Repairs of live-line tools.	15-19	15-7
SECTION VI-HAND TOOLS		
Handtoolsafety	15-20	15-7
General requirements for hand tools	15-21	15-7
Power tool electric shock hazard avoidance	15-22	15-7
SECTION VII-ROPE		
Careofrope	15-23	15-8
Splicingrope	15-24	15-8
SECTION VIII-LARGE PORTABLE AND MOBILE EQUIPMENT		
Large portable and mobile equipment covered.	15-25	15-10
Large portable and mobile equipment maintenance.	15-26	15-10
SECTION IX-ELECTRICAL INSPECTING AND TESTING EQUIPMENT		
Minimum facility field test equipment requirements.	15-27	15-11
Maintenanceoftestequipment	15-28	15-11
CHAPTER 16. ELECTRICAL SERVICE INTERFERENCE		
SECTION I-DISTURBANCE PRODUCERS		
Electrical power quality	16-l	16-1
Electromagnetic interference (EMI)	16-2	16-1
Harmonic interference	16-3	16-1
SECTION II-ELECTROMAGNETIC INTERFERENCE		
Electrical distribution system interference	16-4	16-1
Electrical noise origin	16-5	16-1
Electrical interference during bad weather conditions.	16-6	16-3
Methods of electrical interference location	16-7	16-3
Instrument requirements for checking electrical interference.	16-8	16-3
Communication interference from electrical lines.	16-9	16-4
SECTION III-HARMONIC INTERFERENCE		
Harmonic causing devices and their effects	16-10	16-4
Electric power quality responsibilities	16-11	16-4
Electric power quality data	16-12	16-4
Electrical distribution system interference	16-13	16-5
CHAPTER 17. MAINTENANCE SCHEDULES		
SECTION I-CONSIDERATIONS		
Maintenance planning	17-l	17-l
Maintenance priorities	17-2	17-l
SECTION II-SCHEDULES		
Maintenance frequency guides	17-3	17-l
Revisions to maintenance frequencies	17-4	17-l

APPENDIX A-REFERENCES
APPENDIX B-BIBLIOGRAPI-IY
APPENDIX C-ADDITIONAL WOOD POLE DATA
INDEX

LIST OF FIGURES

		Page
Figure 3-1.	Connections for ungrounded specimen power factor test	3-12
3-2.	Connections for hot- and cold-collar tests	3-12
4-1.	Details showing various horizontal dimensions necessary to provide recommended climbing space	4-2
4-2.	Details showing various vertical dimensions necessary to provide recommended climbing space.	4-3
4-3.	Sample format for recording pole inspection and maintenance data.	4-5

Affordable Wire Management, Exhibit No. EX1010
Case No. IPR2024-00182
Page 10 of 201

		Page
4-4.	Typical pole branch and key	4-6
4-5.	The increment borer	4-8
4-6.	Sealing a test hole with a treated wooden plug	4-8
4-7.	Wood stub pole	4-11
4-8.	Steelreinforcingforawoodpole..	4-12
4-9.	Nozzle for application of a compound preservative.	4-14
4-10.	Measuring sag on line conductors..	4-17
4-11.	Measuring sag on service drop conductors	4-17
4-12.	Single-sleeve compression splice	4-19
4-13.	Double-sleeve compression splice.	4-19
4-14.	Automatictensionsplice	4-20
4-15.	Clamp connectors	4-20
4-16.	Internally-firedtapcomponents	4-21
4-17.	Types of insulators commonly installed	4-23
4-18.	Steepness and flatness limits for guy strands	4-25
4-19.	Typesofpatentanchors	4-26
4-20.	Loganchor	4-27
4-21.	Wood-polepushbrace	4-28
4-22.	Sideanchor	4-29
4-23.	Self-supporting, hog-guyed pole	4-30
4-24.	Recommended minimum clearances for tree trimming	4-30
4-25.	Tree trimming to clear electric wires	4-3 1
4-26.	Removing a limb overhanging wires.	4-32
5-1.	Terminal equipment and cable connection diagrams	5-8
5-2.	Cable fault waveform reflections	5-9
5-3.	Insulation power factor equivalent circuit and vector diagram.	5-16
6-1.	Light distribution patterns for roadway lighting.	6-5
10-l.	Direct-reference or two-point ground test	10-3
10-2.	Auxiliary ground method	10-3
10-3.	Ground resistance measurement, three-point method.	10-4
10-4.	Field setup and curve for fall-of-potential method	10-5
10-5.	Methods of soil treatment for lowering of ground resistance.	10-6
11-1.	Typical test connection for a nondirectional overcurrent relay	11-3
11-2.	Typical test connections for directional overcurrent relays.	11-4
11-3.	Typical test connections for a differential relay.	11-4
11-4.	Typical test connections for reactance distance relays.	11-5
11-5.	Typical test connection for a pilot wire relay	11-6
12-l.	Method of connecting a phantom load for a field test, if on a single-phase, two-wire watthour meter	12-3
12-2.	Method of connecting a phantom load for field test, if on a three-phase, three-wire watthour meter	12-3
13-1.	Terminal-to-terminal voltage test circuit.	13-3
13-2.	Terminal-to-case insulation test circuit	13-4
14-1.	Battery warning sign	14-2
15-1.	Methodsoffinishingropeends	15-8
15-2.	Makinganeyesplice	15-8
15-3.	Makingashortsplice..	15-9
15-4.	Making a long splice	15-9
c-1.	Twelve-inch (300-millimeter) pole with l-inch (25-millimeter) surface decay	c-3
c-2.	Twelve-inch (300-millimeter) pole with 2-inch (50-millimeter) surface decay	c-3
c-3.	Twelve-inch (300-millimeter) pole with 4-inch (l00-millimeter) radial heart-rot	c-4

LIST OF TABLES

		Page
Table 3-l.	Infrared hot spot gradients	3-2
3-2.	Cleaning ceramic insulators and bushings	3-6
3-3.	Temperature correction factors for power factor	3-11
3-4.	Insulation resistance tests on electrical apparatus and systems.	3-13
4-l.	Sapwood thickness in poles.	4-8
4-2.	Pole setting depth.	4-10
4-3.	Tiewirerequirements	4-24
4-4.	Relation of the NESC voltage levels to ANSI C29 class ratings	4-24
4-5.	Numberofguywireclamps	4-30
5-1.	Typical power factor ranges for various cable insulating materials.	5-17
6-1.	Floodlight beam descriptions	6-5
7-1.	Transformer inspection and maintenance checklist	7-3

Affordable Wire Management, Exhibit No. EX1010
Case No. IPR2024-00182
Page 11 of 201

		Page
7-2.	Insulation resistance conversion factors to 20°C	7-6
7-3.	Satisfactorypowerfactors	7-8
8-1.	Troubleshooting chart for oil problems.	8-12
8-2.	Troubleshooting chart for power circuit breakers	
11-l.	Typical laboratory relay test equipment	11-6
11-2.	Troubleshooting chart for general control equipment.	11-8
12-l.	Troubleshooting chart for indicating instruments.	12-6
12-2.	Troubleshooting chart for recording instruments and meters	12-6
13-1.	Maximum ambient temperatures for continuous operation	13-2
13-2.	Capacitor bank oil switch maintenance	13-3
14-1.	Battery room warning notice.	14-2
14-2.	Suggested test accessory list for battery maintenance.	14-9
14-3.	Equalizingcharge	14-11
14-4.	Charging of nickel-cadmium batteries	14-13
15-1.	Suggested list of minimum facility-wide field test equipment.	15-11
16-1.	Harmonic distortion limits.	16-5
17-l.	Maintenance frequencie	17-l

CHAPTER 1

INTRODUCTION

Section I - PRIMARY CONSIDERATIONS

1-1. Purpose and scope.

This manual provides guidance for the maintenance and repair of exterior electrical distribution systems. New construction of exterior electrical facilities, even when funded from maintenance appropriations, should comply with the appropriate design criteria. These systems include substations, overhead and underground electrical distribution systems, exterior lighting systems, and electrical apparatus and components. Guidance for generators and interior electrical systems (600 volts and less) are covered in the following publications:

a. TM 5-683/NAVFAC MO-l16/AFJMAN 32-1083.

b. TM 5-685/NAVFAC MO-912.

c. MIL-HDBK-1003A/ll.

1-2. References.

Appendix A contains a list of references used in this manual.

1-3. Application of codes and publications.

The information in this manual should not supersede equipment manufacturers' instructions and requirements. When conflicts exist the most rigorous requirement should be followed. A11 maintenance and repair of electrical systems should be performed in such a manner that the completed work will conform to the publications listed below to the degree indicated.

a. Codes. The listed codes and standard contain rules (both mandatory and advisory) for the safe installation, maintenance, and operation of electrical systems and equipment.

(1) The National Electrical Code (NEC), NFPA 70.

(2) The National Electrical Safety Code (NESC), ANSI C2.

(3) Occupational Safety and Health (OSHA), General Industry Standards, 29 CFR 1910.

b. Nongovernment publications. Other nongovernment publications referenced in this manual expand guidance in line with recognized industry standards. The most extended coverage on recommended practices for electrical equipment maintenance, and one that should be used in conjunction with both the NEC and the NESC, is NFPA 70B. Publication NFPA 70B is recommended as a useful reference in preparing contract requirements for maintenance to be done by outside service agencies.

1-4. Standards of maintenance.

Electrical systems will be regularly maintained to ensure continued compliance with the codes and publications referred to in appendix A. Such maintenance will prevent system and equipment failures and ensure maximum safety and efficiency in the utilization of the facilities. At each installation, a program for proper maintenance should be established and effectively followed. This program should include the scope of work, intervals of performance, and methods of application including safety requirements, practices and procedures. When a number of items require servicing or renewal over a period of years, a proportionate number should be maintained each year. For instance, if there are 100 transformers on the system, requiring maintenance at 5-year intervals, the work should be performed on 20 transformers each year.

a. Predictive maintenance. A predictive maintenance program is more desirable than routine recurring maintenance. Predictive testing should occur periodically but actual maintenance or replacement should take place only when necessary. An automated testing and record management system should be utilized where available. Where such a system is not available, its acquisition is recommended.

b. Sample testing formats. Testing formats for cable, circuit breakers, switchgear, and transformers are provided in NFPA 70B. These formats can be revised as needed for local requirements.

1-5. Maintenance responsibilities.

An adequate supply of dependable electrical energy is essential for the accomplishment of the installation mission. Adherence to a well planned and well organized maintenance program, including the establishment of specific goals and follow-up procedures will ensure the proper functioning of the equipment in the electrical distribution system.

a. Electrical supervisor. As used in this manual, the title electrical supervisor indicates the individual assigned the responsibility for maintenance of electrical distribution systems and equipment. The maintenance of electrical distribution systems is the responsibility of the installation's commander and a specific duty of an Army director of public

Affordable Wire Management, Exhibit No. EX1010
Case No. IPR2024-00182
Page 13 of 201

works, a Navy public works officer, or an Air Force base engineer. Operation and maintenance are a single staff responsibility, and frequently the same personnel will perform both functions.

b. Electrical supervisor responsibilities. The electrical supervisor will:

(1) Initiate positive action to remove, or reduce to a minimum, the cause of recurrent maintenance problems.

(2) Carry out maintenance inspections and services so there is a minimum of interference with user activities.

(3) Provide for the accomplishment of as much work as possible during each maintenance visit, and ensure that spot checks, inspections, and repairs are made on all components of the electrical facilities.

(4) Ensure that an adequate set of up-to-date records are maintained for each major component of all systems.

(5) Develop standard operating procedures which are in compliance with applicable safety requirements.

(6) Train maintenance personnel to improve their efficiency and to observe safety requirements.

1-6. Maintenance records.

One of the most important sources of information for aiding inspections, maintenance, or tests is a comprehensive file of equipment and service records. In addition to indicating basic information required for proper inspection of the equipment, these records will indicate where trouble has been experienced and where special procedures may be warranted.

a. Equipment documents. There are a variety of documents which indicate the equipment provided and how to keep it operating properly. These documents should be provided when new facilities are built, or existing facilities modified. These records should be obtained from the construction agency as soon as possible, preferably before the electrical supervisor accepts maintenance responsibility. These documents should address any warranty provisions applicable to the equipment. Equipment documents determine maintenance practices and should be included as a part of the maintenance records of the facility. The most common documents are listed below.

(1) *Instruction leaflets and manuals.* Each piece of major electrical equipment purchased should be accompanied by an instruction leaflet or manual outlining the desired methods of installation, operation, and maintenance. These instructions contain valuable information on maintenance practices, part designations, and ordering procedures. Spare parts lists are a vital part of these records.

(2) *Installation drawings.* Maintenance is often affected by the manner in which the equipment is installed. For convenience, and as a means of expediting maintenance, as-built installation drawings should be readily accessible to maintenance and inspection personnel.

(3) *Wiring diagrams.* Adequate and up-to-date wiring diagrams are important for proper maintenance. Diagrams facilitate locating troubles, which otherwise may require extensive probing and testing procedures. Such diagrams should be readily available to maintenance personnel.

(4) *Distribution maps.* Maps showing locations of distribution lines, wire sizes, transformer sizes, pole numbers, voltage classes, and sectionalizing devices are vital. Up-to-date distribution maps mounted on the maintenance or electrical shop wall are very useful.

b. Service records. Service records constitute a history of all work performed on each item of equipment and are helpful in determining the overall condition and reliability of the electrical facilities. Service records should show type of work (visual inspection, routine maintenance, tests, repair), test results (load, voltage, amperes, temperature), and any other remarks deemed suitable. It is highly recommended that service records should include a log of incidents and emergency operating procedures.

(1) *Logs of incidents.* Logs of incidents, such as power failures, surges, low voltage, or other system disturbances are very useful in planning and justifying corrective action.

(2) *Emergency operating instructions.* Emergency work on electrical facilities is safer and quicker when instructions are prepared and posted in advance. Instructions should be prepared for each general type of anticipated emergency, stating what each employee will do, setting up alternatives for key personnel, and establishing follow-up procedures. Instructions should be posted in the electrical shop, security guard office, substations, operating areas, and such other locations as the responsible supervisor deems advisable. Employees should be listed by name, title, and official telephone number. These instructions should emphasize safety under conditions of stress, power interruptions, and similar emergencies.

1-7. Priority and scheduling.

a. Priority. In regard to the support of the installation physical plant, it is the policy of the military

Affordable Wire Management, Exhibit No. EX1010
Case No. IPR2024-00182
Page 14 of 201

departments that, in order of priority, maintenance should be second only to operations. It must be systematic, and it must be timely.

b. Scheduling. The following chapters provide data on service intervals, procedures, and practices. Modifications may be made by installation commanders to meet local requirements. Service intervals may be lengthened only when justified by extenuating circumstances. Whenever service intervals or other guidance in this manual differs from information supplied by the manufacturer, the more stringent procedure should be followed.

Section II - SAFETY

1-8. Minimizing hazards.

Material specifications, construction criteria, installation standards, and safe working procedures have been developed to minimize hazards. All work and materials should conform to the latest accepted procedures and standards, as defined in publications listed or referred to in this manual.

1-9. Qualification of electrical workers.

Due to the inherent hazards encountered in the maintenance of electrical distribution systems and equipment, it is essential that all electrical workers be thoroughly trained and be familiar with the equipment and procedures to be followed.

1-10. Certification of electric workers.

Properly trained electric workers will be certified in accordance with applicable publications.

1-11. Public safety.

All necessary precautions will be taken to warn the public of electrical hazards or other conditions which may constitute a danger. This is especially true of temporary hazards due to work in progress.

1-12. Personnel safety.

Any work on or close to electrical equipment of any kind should be considered dangerous and proper safety precautions will be taken. All personnel who perform work of any kind on or near electrical equipment must be familiar with and observe all safety precautions.

a. Safety first. Two safety rules are mandatory as follows:

(1) Consider all electrical equipment to be energized until it is known positively (as by the presence of grounding clamps) that it is not energized. Comply with regulations and safety instructions contained in NEC and NESC, the applicable departmental publications, and special publications issued by the local command.

(2) Work may be done on energized lines and equipment only by personnel qualified by their job descriptions for that voltage level. Job descriptions should require actual hands-on work service periods which meet local utility and the International Brotherhood of Electrical Workers approval. All tools and equipment must be maintained in proper operating order, be suitable for the maximum voltage level involved, and should be periodically tested for compliance with all safety requirements. Departmental publications should be consulted for specific requirements in each voltage level.

b. Service safety manuals. This manual addresses some safety requirements, but users should also be familiar with the service safety manuals TM 5-682, NAVFAC P-1060, and AFMAN 32-1078.

c. Personal protective temporary grounding. This is temporary grounding installed to protect workers engaged in de-energized line maintenance. The grounds are provided to limit the voltage difference between any two accessible points at the work site to a safe value. An expanded discussion of protective grounding principles and practices is contained in IEEE 1048, NFPA 70B and "The Lineman's and Cableman's Handbook".

1-13. Live-line maintenance.

Aerial live lines are energized lines that are being tested, repaired, and maintained more and more by electrical utilities to reduce the number of outages or service interruptions. The use of such procedures on DOD installations requires that good practice be followed and that there is no conflict with local facility rules.

a. Good practice. Personnel doing live-line work should have satisfactorily completed a formal training course of instruction and be examined periodically. Live-line maintenance usually means any maintenance activity performed on energized electrical conductors or equipment with a phase-to-phase voltage exceeding 600 volts. It usually does not include such activities as switching, hardware tightening, climbing, hole digging, pole setting, conductor stringing, etc. The performance of this work requires equipment and tools that meet applicable industry standards for energized-line maintenance.

b. Local facility rules. Two considerations affect facility rules on the type and extent of live-line maintenance permitted: availability of qualified facility personnel and equipment versus the facility's requirement for uninterrupted operation. If local missions prevent electrical power shutdowns and local facilities are not qualified to perform live-line

Affordable Wire Management, Exhibit No. EX1010
Case No. IPR2024-00182
Page 15 of 201

work, then a live-line contractor may need to be hired on a scheduled and/or a nonscheduled basis. General energized-line maintenance practices covered in chapter 4, section VI, serve only as a guide and are not intended to substitute for training or operating procedures; for meeting specific industry guidelines; or for meeting federal, state, local, or facility regulations and rules.

Section III - AVOIDING PROBLEMS

1-14. Operating conditions.

Always observe the four cardinal rules of electrical maintenance.

a. Keep the equipment clean.

b. Keep the equipment dry or lubricated as appropriate to the part.

c. Keep screwed parts tight.

d. Prevent friction on moving parts.

1-15. Detecting potential trouble.

Diagnostic devices, where available, allow checking the system for potential trouble before it occurs. Potential problems may also be detected by the use of four of our five senses: see, hear, touch, and smell.

a. See. Many abnormal conditions can be detected by visual inspection: some of the patterns identifiable by sight are cleanliness, distortion, color, misalignment, size, and position.

b. Hear. Changes in the intensity of noise, pitch, or frequency are significant clues to operational changes and possible malfunctions. Some of the sound patterns that may indicate malfunctioning are squeaking, rattling, knocking, and whistling.

c. Touch. Among the damaging characteristics which may be identified by touch are vibration, wetness, and heat. Caution should be exercised in touching components which are normally hot enough to burn personnel on contact or live parts with hazardous potentials.

d. Smell. Burning insulation and battery fumes provide distinctive odors which signal component deterioration.

1-16. Electrical connections.

Connections are an essential part of any electric circuit. Good electrical contact is essential. Dirt is the enemy of good contact. Whenever an electrical connection is to be made, extreme care must be taken to ensure all dirt, rust, corrosion, insulation, oil, and other contaminants are removed. The contact surfaces should be bright, clean metal. This requirement applies to connections made by soldering, clamps, twisted sleeves, compression fittings, or any other method.

a. Aluminum. Connections of aluminum items should always include the application of a joint compound which will ensure metallic contact by dissolving the aluminum oxide which is always present on aluminum and aluminum alloy surfaces in air. The contact surfaces of aluminum conductors and connectors should first be vigorously cleaned with a stainless steel wire brush to a bright finish and then immediately coated with the aluminum-oxide inhibiting compound.

b. Copper. Copper contact surfaces should be cleaned, but not connector barrels. The barrels should be cleaned on the inside.

c. Dissimilar metals. Only connectors designed for the purpose should be used to connect aluminum and copper items.

d. Testing. Accessible connections may be tested using an infrared detector only if the connection is under load as covered in chapter 3, section I.

Affordable Wire Management, Exhibit No. EX1010
Case No. IPR2024-00182
Page 16 of 201

CHAPTER 2

INSPECTION AND TESTS

Section I - PERFORMANCE

2-1. Determining equipment condition.

The ability of equipment to perform its function, or to continue its function for its normal life cycle, must be determined if the distribution system is to operate dependably and economically. The condition of equipment can be determined by two methods: inspection and tests. Such things as broken insulators or oil leaks can easily be determined by inspections, but other details such as the condition of transformer oil or a trip setting for a circuit breaker can be determined only by tests. The scope of inspection and tests is dependent on the type and complexity of the equipment, and the results desired. Inspections are normally visual, but hearing, touching, and smelling can also indicate problem areas. Tests can be electrical, physical, or chemical, or combinations of these. The selection of the test to be made may be at least partially determined by the availability of test equipment and of personnel capable of using it.

2-2. Reasons for inspections and tests.

Inspections and tests are performed for several reasons.

a. Preventive maintenance. This includes routine testing of operating equipment and periodic testing of nonoperating components to anticipate and correct possible equipment failure before it occurs.

b. Maintenance proof testing. This is testing to ensure that maintenance/repair was done properly. This should be done when maintenance and/or repair are complete, and to show whether the equipment is operable and properly connected.

2-3. Associated test guidance and records.

Tests are ordinarily used in the field to determine the condition of various elements of an electrical power-distribution system. The data obtained in these tests provide information that is used to determine whether any corrective maintenance or replacement is necessary or desirable. The ability of the element to continue to perform its design function adequately can be ascertained. Also the gradual deterioration of the equipment over its service life can be charted. Records must include factory test data provided with shop drawing submittals, acceptance testing data, and each routine maintenance test, so that the history of the equipment may be available for future reference. Records should be maintained to indicate what test data are required and what means are to be used to provide this data. Nondestructive maintenance tests can cause insulation breakdown with no warning. A plan for coping with this possibility should be included in the test procedures.

a. Qualifications of test operators. If a testing program is to provide meaningful information relative to the condition of the equipment under test, then the person evaluating the test data must be assured that the test was conducted in a proper manner and that all of the conditions that could affect the evaluation of the tests were considered and any pertinent factors reported. The test operator, therefore, must be thoroughly familiar with the test equipment used in the type of test to be performed, and also sufficiently experienced to be able to detect any equipment abnormalities or questionable data during the performance of the tests.

b. Test equipment. It is important to have the proper equipment for performing the required tests in any test program. In general, any test equipment used for the calibration of other equipment should have an accuracy at least twice the accuracy of the equipment under test. The test equipment should be maintained in good condition and should be used only by qualified test operators. All test equipment should be calibrated at regular intervals to ensure the validity of the data obtained. In order to get valid test results, it may be necessary to regulate the power input to the test equipment for proper waveform and frequency and to eliminate voltage surges.

c. Use of forms. To provide optimum benefits, record all testing data and maintenance actions on test circuit diagrams and forms that are complete and comprehensive. Recording both test data and maintenance information on the same form is recommended. A storage and filing system should be set up for these forms that will provide efficient and rapid retrieval of information regarding previous testing and maintenance on a piece of equipment. A well-designed form will also serve as a guide or a checklist of inspection requirements. Samples of typical forms that can be used are included in NFPA 70B, appendix G.

Affordable Wire Management, Exhibit No. EX1010
Case No. IPR2024-00182
Page 17 of 201

2-4. Electric workers, instruments, and reports.

Tests of electrical equipment should be performed under the supervision of qualified electric workers. If in-house personnel are not available for these tests, the services of a qualified electrical testing agency may be used.

a. Testing agency qualifications. The testing agency should submit proof that it is a corporately independent testing organization which can function as an unbiased testing authority, professionally independent of the manufacturers, suppliers, and installers of equipment or systems evaluated by the testing firm. The testing agency should meet OSHA criteria for accreditation of testing laboratories, Title 29, Part 1910-7; or be a full member company of the InterNational Electrical Testing Association (NETA) and be regularly engaged in the testing of electrical equipment devices, installations, and systems. The lead technical agency member on-site should be currently certified by NETA or the National Institute for Certification in Engineering Technologies (NICET) in electrical power distribution system testing.

b. Test instrument calibrations. Instruments should have been calibrated within the last 12 months except that analog instruments should have been calibrated within the last 6 months. Calibration should provide the full-scale accuracy based on the manufacturer's data, usually 1 percent for switchboard instruments and 0.25 percent for portable instruments. Dated calibration labels should be visible and up-to-date calibration records, instructions, and procedures should be maintained for each instrument which should have had a calibrating standard of higher accuracy than that of the test instrument.

c. Test reports. A dated test report should include, as a minimum, the following data:

(1) Summary of project findings and recommendations, if required for additional work.

(2) Description of equipment tested.

(3) Description of test.

(4) Test results.

2-5. Frequency of inspection.

The intervals given in this manual and/or by manufacturer's maintenance recommendations should be considered an initial interval for normal conditions. Intervals should be shortened where adverse conditions exist and may be lengthened only where experience under better-than-normal conditions show this can be done safely. The frequency of inspection may vary for similar equipment operating under different conditions. Critical equipment, heavily loaded apparatus, operator handled, and intermittently operated units are examples of different operating conditions.

Affordable Wire Management, Exhibit No. EX1010
Case No. IPR2024-00182
Page 18 of 201

CHAPTER 3

TRANSMISSION AND DISTRIBUTION SUBSTATIONS

Section I - GOVERNING CONSIDERATIONS

3-1. Type of substations covered.

This chapter includes a transmission and distribution substation which is an assemblage of equipment for purposes other than generation or utilization, through which electrical energy in bulk is passed for the purpose of switching or modifying its characteristics.

3-2. Electrical system relationship.

A substation is an integral and vital part of an electrical system. It does not exist independently of the rest of the system, though it is usually designed so that a failure of a single component will not interrupt loads, except for switching times. Such interruption may force greater than normal loads to be carried by other components of the station while repairs are being made. Most substations are designed so they do not require attendant personnel on a continuous basis. Supervisory control and data acquisition (SCADA) systems, where provided, allow monitoring at a central point.

3-3. Substation safety concerns.

Substations present a potential safety hazard, owing to the large amount of energized conductor surface concentrated in a relatively small area. In general, only portions of an entire substation can be de-energized, although scheduled outages may be required for equipment which can not be bypassed or worked on while energized. All inspecting and repairing personnel must be thoroughly trained. The following requirements are minimum:

a. Familiarity with operating procedures, protective and interlocking schemes, and the equipment capabilities at the specific substation.

b. Knowledge of the proper use of safety equipment, first aid procedures and equipment, and equipment grounding techniques.

c. Access to safeguards such as danger signs, temporary barriers, protective clothing, tools and protective equipment, and all safety manuals and rules. Procedures should clearly indicate insulating requirements and working clearances for any category of energized-line maintenance employed.

d. Keeping proper inspection records and checklists so that observed defects or improper conditions not immediately repairable will be promptly corrected.

3-4. Substation security.

In addition to the personnel safety hazards mentioned above, an electrical substation presents an attraction to would-be vandals, dissidents, or other belligerents. For these reasons, good security is a basic requirement. All means of access to substations, including buildings and yards, will be kept locked when unoccupied and secure when occupied by authorized personnel.

3-5. Periodic inspections of substations.

An inspection checklist, tailored to a specific substation and containing all items to be checked, is recommended. Monthly visual and yearly infrared inspections of the entire substation are recommended.

3-6. Visual inspections of substations.

Visual inspections should include the total substation area including the site, the control house, and all equipment and structures. The energized substation should be inspected from ground level, to ensure adequate safety clearances from energized parts. Binoculars should be used to view buses and other equipment located on structures. Special care should be used when ground connections are checked, since a high voltage could develop across any gap created between a ground cable and a piece of equipment, particularly under fault conditions. For this reason, ground connections shall not be removed for any reason while the substation is energized.

3-7. Infrared inspections of substations.

All matter emits infrared rays in proportion to its temperature.

a. Method. An infrared detecting device can be used to determine loose connections, overloading of conductors, localized overheating in equipment, or similar conditions before they become serious. Some equipment is sensitive to a fraction of a degree. Infrared inspection can be done from a distance, since contact with the item being measured is not required. Substation equipment, such as bare bus, disconnect switches, and connections, can be checked without being de-energized. The inspection is made by aiming the infrared detector at various areas of the substation and noting where the hot spots are.

Affordable Wire Management, Exhibit No. EX1010
Case No. IPR2024-00182
Page 19 of 201

b. Equipment. Several types of infrared detectors are available. These vary from a simple hand-held instrument similar to a gun, through which the operator can detect hot spots and note their locations, to complex equipment requiring qualified operators and product photographs as a permanent record of the area being checked. The simpler detectors are usually sold outright, while the complex items are usually used by infrared detection services which contract to do the work. Having an instrument readily available can be justified for a large installation with several substations, while a contract to have a survey performed would probably be better for a small installation. However, as a low cost alternative, a camera with infrared sensitive film may be used, or a self-calibrating portable indicating unit can be coordinated with a Polaroid camera.

c. Surveys. When infrared (thermographic) surveys are made, the equipment to be scanned must be identified. Scanning should be made after visual and mechanical conditions have been observed. Report all areas scanned.

(1) *Reports.* If hot spots are found the report should locate the problem area and the temperature rise above a reference 30 degrees C. The cause of the heat rise should be identified such as phase unbalance, overload, poor connections, or other heat producing conditions.

(2) *Test parameters.* Equipment must detect emitted radiation and convert to a visual signal. A detection ability of a one degree C rise between the hot spot area and the 30 degree reference area is required.

(3) *Hot spot indications.* NETA-MTS indicates that temperature gradients as shown in table 3-l will require the following actions.

Table 3-l. Infrared hot spot gradients[1]

Temperature gradient	Deficiency	Action
0” to 3°C	Possible	Investigate
4” to 3°C	Probable	Repair as time permits
16°C and above	Major	Repair immediately

[1]Consider providing photographs an&or thermograms as seen on the imaging system in reports where appropriate to the size and criticality of the equipment examined.

Section II - STRUCTURE MAINTENANCE

3-8. Importance of maintenance.

The useful life of a substation structure is directly dependent upon the care it receives. Surface preservation is of prime importance.

3-9. Galvanized steel structures.

The protective coating produced by the galvanizing process normally has a long life; however, the coating will eventually fail and rust will appear. The life of the coating on structural steel used in substations should generally be longer than 12 years except possibly for the upper flat surfaces of horizontal members. Any failure of the coating will usually occur in spots rather than over an entire surface. Refer to chapter 4, section VII for self-weathering steel requirements.

a. Cleaning. Clean the surface with a wire brush or by other mechanical means to remove rust and dirt. If the surface is contaminated with grease or oil, a solvent should be used to remove those contaminants. Mineral spirits or one ounce (28.4 grams) of trisodium phosphate in one gallon (3.8 liters) of warm water can be used as the solvent. If it is uneconomical or impractical to remove all rust, a reasonably satisfactory job can be obtained by deactivating the rust through chemical treatment. A weak solution of phosphoric acid is suggested for deactivating rust. Use proper skin and eye protection.

b. Painting. If required spot painting covers more than 5 percent of the visible surfaces, the entire structure probably should be painted.

(1) *Priming coat.* Apply a priming coat to the clean dry surface using a good zinc dust/zinc oxide paint. Allow ample time for the paint to dry before applying the finish coats.

(2) *Finish coats. Two* finish coats should be applied using the same type paint used for priming. Ample drying time should be allowed between finish coats. Only one finish coat is needed for areas on which the galvanized coating remains intact. Other paints normally used as final coats for metal (such as aluminum paint) may be used as the final coat in place of the zinc dust/zinc oxide paint.

(3) *Temperature.* Painting of outdoor metal work is recommended only when the temperature is above 45 degrees F (7 degrees C) and when the relative humidity is below 80 percent.

(4) *Durability.* The durability of a paint coating depends on thickness, cohesion, and continuity. Generally, 5 mils or 0.005 inch (0.125 millimeters) is an adequate thickness. The thickness should be uniform, and paint should not be easily scraped off the metal. Welds, edges, and other hard-to-coat areas should be given particular attention.

Affordable Wire Management, Exhibit No. EX1010
Case No. IPR2024-00182
Page 20 of 201

3-10. Painted steel structures.

Most steel for indoor substations, and some steel for outdoor substations, is not galvanized and paint is used for preservation.

a. Cleaning. All loose paint, blisters, and scale must be thoroughly removed. Feather back the original coating around the damaged area with sandpaper. Where the condition of the finish is poor, the paint should be removed entirely. Wire brushing, sandpapering, or scraping is desirable where only partial surface cleaning is necessary. Paint removers will soften and aid in removal. However, the paint remover must be neutralized before attempting to paint. For removal of oil and dirt, weak solvents such as mineral spirits, other petroleum thinners, or turpentine substitutes should be used.

b. Painting. Painting should be done after cleaning. All bare metal should be covered with a primer. Where only chalking has occurred, one finish coat is sufficient. A zinc-chromate, alkyd-resin primer followed by an alkyd-base paint is a suitable air-dry combination for exterior surfaces. The primer coat should be allowed to air-dry thoroughly and should be followed by two finish coats with sufficient time allowed between coats for drying.

3-11. Aluminum structures.

Structures of aluminum alloy normally need no surface protection. Painting of aluminum alloy members is not recommended except where esthetics is of prime importance.

3-12. Wood structures.

Permanent wood structures should be inspected and treated as described in chapter 4, section IV. Temporary wood structures may or may not be treated, depending on the local climate and expected life of the structure.

3-13. Concrete for structure foundations.

Concrete is used extensively as a foundation for metal structures and for equipment. Concrete should be visually checked during the course of other maintenance and repair. Cracks wider than about 1/16 of an inch (0.16 millimeters) should be repaired with a sand-cement grout. Badly deteriorated concrete should be replaced.

3-14. Structure connections and joints.

Regardless of material, all connections and joints should be checked periodically for tightness of fastening hardware. Loose, broken, or missing parts should be tightened or replaced as required to maintain a rigid structure.

Section III - SUBSTATION YARDS

3-15. Provision of yards.

In some cases, there may be no outdoor yard in connection with a substation. However, these are exceptional situations, and most substations will have an adjoining yard.

3-16. Fences for yards.

Fence maintenance consists of material preservation, maintenance of structural integrity, and maintenance of a good ground. The following procedures are recommended:

a. Material preservation. In noncorrosive locations, double-dipped (ASTM A 90, Class II) hot-dipped galvanizing on chain-link fences will normally furnish adequate protection for many years. In corrosive locations, use of an aluminized fabric should be the preferred installation. When material preservation is required for steel or aluminum chain-link fences, it should be described in section II. Wood fences are not usually considered to provide adequate security for substations, and replacement with chain-link fencing should be considered. Screening, if required, can be provided with privacy slats of polyester-fiberglass or aluminum.

b. Structural integrity. Security requires that structure integrity be maintained by replacing damaged posts or other materials as required. Chain-link fencing should be kept taut. Spalling or broken components of masonry fencing should be replaced.

c. Grounding. Grounding must be maintained as a safety feature. Visual inspection should be made as a part of the monthly inspections, especially at the gate bonding straps. Tests should be made as prescribed in chapter 10, section III. Defects should be corrected immediately.

3-17. Warning signs at yards.

Warning signs conforming to OSHA standards and stating the voltage should be placed on each fence gate, on each substation building door accessible from outside the yard, and at intervals along the fence. At least one sign must be visible from any position along the fence. Location and legibility of all signs should be checked as a part of the monthly inspections.

3-18. Substation yards.

Substation yards at the time of construction should have been graded and cleared of vegetation. The entire yard area should be covered with some kind of earth covering. Concrete slabs, paving, or gravel

Affordable Wire Management, Exhibit No. EX1010
Case No. IPR2024-00182
Page 21 of 201

fill are usual coverings. For very large substations some areas may be seeded for grass.

a. Ground treatment. Removal of vegetation, elimination of low spots in the yard, and control of grassed areas is necessary. If grass is permitted, careful maintenance is necessary both for esthetics and safety reasons. If allowed to grow uncontrolled, weeds, grass, or other plants create fire hazards, are unsightly, impede free action, and may grow tall enough to contact live parts and cause flashovers. Low spots collect debris and stagnant water. Where chemical application for removal of vegetation is required, it should meet environmental requirements.

b. Housekeeping. Miscellaneous storage should not be permitted except in specific areas reserved for this purpose. Storage should not interfere with operations and should be in a protected, tidy, and accessible manner. Birds may cause problems requiring removal of nests and possible provision of bird repellant controls such as tape, images, or sound systems.

Section IV - INSULATORS

3-19. Function of insulators.

The function of an insulator is to support a conductor or conducting device safely. An insulator, being of a nonconductive material, physically and electrically separates the supported item from any grounded or energized conductors or devices.

a. Composition and problems. Insulators are composed of porcelain, glass, fiberglass, or a composite compound. Maintenance is necessary to preserve their insulating ability which can be degraded by contamination or other damaging actions. Most insulator damage will result from gun shots; lightning, surge, or contamination flashovers; and wind damage. Defective insulators can also cause visible corona or interference voltage propagation.

b. Related material. Apparatus type insulators are provided in substations to support devices and heavy lines. See chapter 4, section XII, which provides a discussion of insulation levels.

3-20. Tests of insulators.

Radio interference conditions may be detected by using instruments designed for this purpose. Otherwise, maintenance tests on insulators are normally limited to occasional power factor measurements at the more important installations, where the loss of the facilities must be kept to an absolute minimum. Bus and switch insulators should be power-factor tested in conjunction with similar testing of other apparatus within the substation. Power factor tests are described in section VII.

3-21. Inspection and repair of insulators.

Switch-and-bus apparatus type insulators are the most intricate type and require the highest degree of reliability in service. This is because the several pieces of porcelain and hardware, assembled in a single unit, are usually located at key positions in the systems, where failure is extremely serious. Switch-and-bus insulator failures occur when porcelain is thrown in tension by any thermal movement between nested parts, which can cause cracking and allow the entrance of moisture. An accumulation of foreign deposits, and mechanical damage from external sources also cause deterioration. Evidence of such impairments may cause a flashover puncture accompanied by a destruction of insulator parts. Workers should be CAUTIONED that equipment must be de-energized unless the procedure in chapter 4, section XV is authorized.

a. Ceramic insulators. Ceramic insulators are made of wet-process porcelain or toughened glass.

(1) *Construction.*

(a) Porcelain insulators. Porcelain insulators are manufactured from special clays to produce a plastic-like compound which is molded, oven dried, dipped in a colored glazing solution, and fired in a kiln. The glossy surface of the glaze makes the insulator surface self-cleaning. Large porcelain insulators are made up of several shapes cemented together. A chemical reaction on the metal parts from improper cementing can result in a cement growth which can be sufficiently stressful to crack the porcelain.

(b) Glass insulators. Glass insulators are made from a mixture of sand, soda ash, and lime which is mixed and melted in an oven, then molded, cooled, and annealed.

(2) *Inspection.*

(a) Look for fractures, chips, deposits of dirt, salt, cement dust, acid fumes, or foreign matter, which under moist conditions may cause a flashover.

(b) Check for cracks in insulators by tapping gently with a small metal object ONLY WHEN DE-ENERGIZED, about the size of a 6-inch (15 centimeter) wrench. Insulators free of cracks emit a ringing sound when tapped; cracked ones sound dull and hollow. To avoid damaging good insulators, tap them; do not hit them hard.

(3) *Repair.*

(a) If the main body of a pin type or post insulator is cracked, replace it immediately.

(b) Hone small chips from shells or skirts, and paint with an insulating paint or varnish to

Affordable Wire Management, Exhibit No. EX1010
Case No. IPR2024-00182
Page 22 of 201

provide a glossy finish and to lessen dirt accumulation.

(c) Since the loss of a skirt on a pin-type insulator reduces the insulation value of the insulator by 30 percent or more, replace such broken units.

b. Nonceramic insulators. Nonceramic or composite insulators include core, weathersheds, and metal-end fittings. A weathershed is the external part of the insulator that protects the core or mechanical load-bearing component and provides the wet electrical strength and leakage distance. The core consists of resin and glass fibers. The weathersheds are of polymeric materials such as epoxy resins or elastomers and normally contain inorganic fillers.

(1) *Construction.*

(a) Fiberglass. Fiberglass insulators are manufactured with rods of fiberglass treated with epoxy resins. Rubber-like compounds are applied to the rods to fabricate suspension, dead-end, and post-type insulators.

(b) Polysil. Polysil insulators are formed by using various sizes of silica bound together chemically with a resin into a compound which is approximately 90 percent silica. Insulators have excellent mechanical and dielectric strength, are nontracking, and do not carbonize under severe arcing conditions. They are very durable for use in an adverse atmosphere. Polysil was developed by the Electric Power Research Institute (EPRI).

(2) *Inspection and replacement.* Composite insulators are frequently used in outlying areas where shooting vandalism is a problem. Damage to nonceramic insulators, particularly from small arms ammunition, may not always be easily detected visually. When such damage is detected, the damaged insulators should be replaced as soon as practical, especially if embedded metal is found in the shank of the insulator. A few holes through only the weathersheds will have little or no adverse effect on the performance of the insulator.

c. Metal parts. Metal parts consist of fittings that connect the insulator at one end to the support and at the other end to the conductor.

(1) *Inspection.* Look for fractures and any rust.

(2) *Repair insulators having defective hardware.*

(a) Wire-brush rusty spots down to bare metal. Apply priming coat of paint and dry. Apply finish coat of paint to spots covered with primer.

(b) Replace insulator if loose cement permits movement between porcelain and metal parts.

3-22. Cleaning of insulators.

Since the insulating qualities of insulators, and their ability to prevent flashovers, depend on preventing contamination buildup, cleaning frequencies will depend on the location. Ceramic insulators must maintain their glass-like glaze and care must be taken in cleaning to prevent this smooth surface from being scratched or dulled. Nonceramic insulators will deteriorate with time as the surface decomposes, although proper cleaning will help to extend their service life. For convenience, safety and thoroughness, insulators should be cleaned while out of service.

a. Causes of contamination. All insulators and also bushings are designed to permit satisfactory operation with some contamination. However, alternate wetting by early morning mist and fog, followed by exposure to dust and wind, can build up harmful deposits. Special contamination problems are encountered near steel mills, cement and chemical plants, and other factories that saturate the air with finely divided, semi-conductive particles. Along coastal areas, salt deposits build up and materially reduce the flashover value. Many of these deposits are extremely tenacious, requiring that the insulator be removed from service and cleaned by hand. Where contamination is serious, special long-leakage suspension insulators for high-voltage lines have been used; but, where severe deposits occur, washing of special insulators is required as often as for standard insulators. To lengthen maintenance intervals, in areas where contamination is severe, ceramic insulators and bushings may be coated with special silicone greases. Greasing is not recommended for nonceramic insulators, a channeled arcing can lead to tracking on greased composite insulators. Many weathershed materials are unsuitable in areas where hydrocarbon vapors are prevalent or where they come in contact with wood poles treated with hydrocarbons.

b. De-energized cleaning methods and materials for ceramic insulators. The following materials and methods are specified for porcelain cleaning. Table 3-2 should also be consulted.

(1) Clean, grit-free, lintless wipers should be used.

(2) An abrasive, of the kitchen-cleanser type, mixed with clear water to the consistency of a thick paste, may be applied with a wiper or stiff-bristle brush. The amount of rubbing depends on the material being removed. Rinse freely with clear water.

Affordable Wire Management, Exhibit No. EX1010
Case No. IPR2024-00182
Page 23 of 201

Table 3-2. Cleaning ceramic insulators and bushings

Deposit	Type of cleaner	How applied	Results
Acid crust from a chemical plant	Bon Ami[2]	Rag	Satisfactory
	Ammonium bifluoride	Brush	Fair
	Oakite[2]	Hot bath	Satisfactory
	Lockbrite cleaner[2]	Brush	Satisfactory
	Paint thinner	Rag	Satisfactory
Black paint carbon	Skybrite window cleaning crystals[2]	Wash	Satisfactory
	Dilute muriatic acid	Cloth	Satisfactory
	Extra-coarse steel wool	Rub	Good
Cement dust	Hydrochloric acid[3]	Brush	Satisfactory
	Wire brush	Brush	Satisfactory
	Scrape and apply paraffin	Steel wool, rags, and salvasol	Requires annual cleanup
Fly ash	Lockbrite[3]	Steel wool, rags, and salvasol	Used below 32°F (0°C)
	Lockbrite[2]	Rag	Used below 32°F (0°C)
Gummy soil, dirt and oil	Bon Ami and turpentine[2]	Wash	Satisfactory
Iron ore	Skybrite window cleaning crystals[2]	Brush	Satisfactory
Leather dust	Brush	Dip or wipe	Satisfactory
Lime	Muriatic acid[3]	Hand	Satisfactory
	Lockbrite[2]	Wipe	Satisfactory
Oil soot	Dry cloth	Rag	Satisfactory
Red lead	Paint thinner[4]	Rag	Satisfactory
Salt	Water	Water and rags, steel wool, rags, and water	Satisfactory
Smoke	Lockbrite[2]		Satisfactory
	Larkin cleaner[2]	Steel wool, rags, and water	Satisfactory
Sulfur	Oakite[2]	Rags	Satisfactory
	Standard Oil solvent[2]	Cloth	Satisfactory
Traffic film	Lockbrite[2]	Cloth	Satisfactory
Unknown	Windex glass cleaner[2]	Atomizer and wipe with dry rags	Fair
Vapors from paper mill	Vinegar and bicarbonate of soda paste	Rag-coat porcelain, rub off, and finish with steel wool	Fair
Wood-mill dust	Brush	Brush	Satisfactory

[1]The insulating qualities of ceramic insulators and bushings and their ability to prevent flashovers depend largely on the glass-like glaze of the surface. During cleaning operations, therefore, care must be taken to preserve this smooth surface and prevent its being scratched or dulled.

[2]The use of brand names is to identify the type of material recommended and does not imply superiority over other brands of similar material.

[3]This chemical gives off irritating fumes which are dangerous in high concentration. Do not use without respiratory protection.

[4]Some paint thinners are highly flammable. When use of a thinner having a flash point under 100°F (38°C) is necessary, it will be handled in accordance with applicable safety regulations.

(3) Muriatic acid, diluted with water to a 10- to 50-percent solution, is effective for many extremely tenacious contaminations. The acid concentration should be kept as low as possible, because it tends to attack metal parts and cemented joints. It is applied with a fiber or bristle brush or cloth and permitted to work for approximately 3 minutes, after which the porcelain should be scrubbed clean and rinsed thoroughly with clean water. Rubber gloves and goggles should be worn to protect hands and eyes from the acid.

c. De-energized cleaning for nonceramic insulators. Manufacturers' recommendations should be followed since weathershed construction and ceramic materials vary.

d. Cleaning while energized. Although insulators may be washed while energized by the use of complex equipment, it is not recommended as a general practice for small military installations. At large military installations, where personnel have been properly instructed and trained, ANSI/IEEE 957 should be used as a guide for cleaning energized insulators. If either the serving utility or a local contractor is equipped to perform this service, contracts for this type of work might be justified.

Affordable Wire Management, Exhibit No. EX1010
Case No. IPR2024-00182
Page 24 of 201

Section V - BUS STRUCTURES

3-23. Definition of bus structures.

A bus structure is an assembly of bus conductors with associated connection joints and insulating supports. It can have bare or insulated conductors. A busway is a grounded metal enclosure, containing factory-mounted, bare or insulated conductors, which are usually copper or aluminum bars, rods, or tubes. Each serves as a common connection between two or more circuits.

3-24. Maintenance of bus structures.

Bus structures need regular scheduling of visual inspections.

a. Schedule. Enclosed buses occurring in switchgear should be inspected visually, in conjunction with scheduled outages for circuit breaker, fuse, switch, or other associated equipment maintenance. Open-type buses may be visually inspected without being de-energized. The frequency of such inspections depends largely on the local contamination problem and will, therefore, vary with each installation. However, each bus should be visually inspected at least once each year as a minimum.

b. Visual inspection. Inspect all bus conductors and connections for evidence of overheating, loose or corroded connections, and poor alignment that might result from short-circuit stresses. Special attention should be given to contacts between dissimilar metals. For example, copper salts falling onto aluminum will chemically deteriorate the aluminum. This situation will be most severe at locations subject to salt spray.

3-25. Cleaning of bus structures.

The cleaning of buses is limited primarily to that of eliminating excessive contamination from the supporting insulators. It is not necessary to remove corrosion from the conductors, except where it either affects contact resistance of connections or can lead to deterioration of conductors.

3-26. Testing of bus structures.

Generally, no testing is required in connection with a bus structure, except that trouble spots should be detected by checking bus temperature. Whenever electric current flows, there is some temperature rise. If this rise becomes excessive, such as at a point of poor contact, trouble will develop. Checking for higher-than-normal temperatures by infrared inspection can reveal these future trouble spots.

Section VI - INSTRUMENT TRANSFORMERS

3-27. Definitions of instrument transformers.

An instrument transformer is designed to reproduce in its secondary circuit (in a definite and known proportion) the current or voltage of its primary circuit with the phase relations and waveform substantially preserved.

a. Current transformers. A current transformer is a constant-current transformer which reduces line currents into values suitable for standard measuring devices such as ammeters and wattmeters and standard protective and control devices. It also isolates these devices from line voltages. The primary winding is connected in series with the circuit carrying the line current, or as a window-type arrangement linked magnetically with the line conductor which eliminates the need for an integral primary winding.

b. Voltage (potential) transformers. A voltage transformer is basically a conventional constant-voltage transformer with primary and secondary windings on a common core connected in shunt or parallel to the power supply circuit to be measured or controlled. The secondary winding insulates devices from the power circuit.

3-28. Short-circuiting dangers.

The basic difference between current and potential transformers *must* be observed. A voltage transformer like most constant-voltage devices should never be short-circuited. A current transformer, being a constant-current device, requires that the secondary circuit always be closed. As long as there is current in the primary winding, there will be current in the secondary winding. On an open circuit the voltage will be the secondary current multiplied by an extremely high open-circuit secondary resistance. This is a voltage which may both damage insulation and prove dangerous to life. Under no circumstances should the secondary of a current transformer be opened while the primary circuit of the transformer is energized, unless the terminals of the current transformer are of the short-circuiting type.

3-29. Maintenance of instrument transformers.

Instrument transformers should be scheduled for a maintenance inspection every 2 years. In addition, they should be inspected visually any time appara-

Affordable Wire Management, Exhibit No. EX1010
Case No. IPR2024-00182
Page 25 of 201

tus with which they are associated is inspected, but not less than every 6 months.

a. Safety. Before performing any maintenance on instrument transformers, they must be de-energized and completely isolated from any energized source. Isolation may be accomplished by opening applicable disconnect switches or fuses or by de-energizing appropriate circuit breakers. In polyphase circuits, all phases must be disconnected to ensure that instrument transformers are not energized through interconnected secondaries. Drawout-type voltage transformers, used in metal-clad switchgear, should be completely withdrawn for maintenance.

b. Procedure. Maintain bushings and terminals of instrument transformers as described in section VII. Maintain fuses, if present, as described in chapter 8, section II.

(1) *Case.* Inspect case or tank for evidence of corrosion and leaks. Clean and paint as required. Instrument transformers that show evidence of leaks should be replaced with those of the same rating and returned to a shop for repair.

(2) *Conduit and connection.* Tighten all loose joints in conduit around fittings, terminal boxes and supporting clamps. Clean and paint corroded areas. Verify tightness of all bolted connections. Verify that wiring, grounding, and shorting connections provide good contact.

(3) *Drawout mechanisms.* Test the proper operation of the voltage transformer withdrawal mechanisms (tip out) and grounding operation.

3-30. Tests of instrument transformers.

Instrument transformers rated above 15 kilovolts should receive power factor tests during the scheduled maintenance period for transformers given in table 7-l. Procedure for making these tests is described in section VII. Other tests, which may be made during or after shop repairs, include:

a. Oil analysis.
b. Ratio.
c. Polarity.
d. Resistance.
e. Exciting current.
f. Overvoltage.

Section VII - BUSHINGS

3-31. Definition of bushings.

A bushing is an insulating structure which provides a through conductor or a passageway for such a conductor. A bushing has a provision for mounting on a barrier (conducting or otherwise). The bushing insulates the conductor from the barrier and conducts current from one side of the barrier to the other side. The primary function of a bushing is to provide an insulated entrance for an energized conductor into an apparatus tank.

3-32. Type of bushings covered.

Information in this section pertains to bushings on such substation apparatus as power transformers, sulfur hexifluoride (SF,) and oil circuit breakers, and high-voltage instrument transformers. Although bushings on low-voltage instrument transformers ordinarily require little attention, the following recommendations for inspection and cleaning can be followed for such equipment as well.

3-33. Maintenance of bushings.

Bushings are always an integral part of specific apparatus and should be inspected along with that apparatus.

a. Schedule. External portions of bushings, which are easily viewed and form a part of equipment that is under constant supervision, should be visually inspected on the same schedule as the associated apparatus. Factors that may increase the frequency of maintenance and inspections include:

(1) Construction, condition, age, and history of the bushing.

(2) Conditions under which the bushing must operate. Bushings subject to excessive contamination or temperature should be inspected more frequently than those that operate under normal conditions.

(3) Relative importance of service continuity.

(4) Accessibility.

b. Visual inspection. Bushings should be visually inspected for evidence of any condition that will tend to impair satisfactory performance, including:

(1) Excessive contamination.
(2) Cracked or broken porcelain.
(3) Low oil level (oil-filled bushings).
(4) Broken or deteriorated seals.
(5) Fractured metal parts.
(6) Excessive operating temperature.
(7) Loose or missing parts, such as a power factor test tap cover.

c. Porcelain inspection. When inspecting porcelain, the following procedure is recommended:

(1) *Fractures.* Check for fractures and chips in porcelain. The significance of a crack or chip depends on its location and configuration, since a chipped skirt does not affect performance unless the effective creepage distance is appreciably reduced. If the crack appears to extend into the body of the porcelain, examine it carefully to see whether it is only a harmless surface marking the glaze or some-

Affordable Wire Management, Exhibit No. EX1010
Case No. IPR2024-00182
Page 26 of 201

thing that may result in an operating hazard. Fractures or chips may be caused by the following actions.

(a) Rigid bus connections that do not allow for thermal expansion or contraction.

(b) Thrust from breaker operation, which may fracture either the top or bottom porcelain if the bottom member is loose.

(c) Uneven or excessive tightening of clamping-ring bolts.

(d) Improper cementing onto the clamping ring.

(e) Mechanical shock caused by blows or projectiles.

(2) *Contamination* Check for foreign deposits, such as dirt, salt, cement dust, rust, carbon, acid oil sludge, filler compound, copper sulfate, or other material that may cause flashover under moist conditions.

(3) *Loose porcelain.* Check for loose or improper seating of the lower porcelain.

(4) *Evidence of flashover.* Flashover may be caused by an operating voltage above the bushing rating, excessive transient voltage, or semiconductive foreign particles contaminating the porcelain.

d. Porcelain repair. In addition to the upper or main body porcelain, some bushings have a lower porcelain member to give added strength against mechanical shock. Porcelain repairs generally are made in either of the following ways:

(1) *Fractures.* When the main section of either the lower or upper porcelain is fractured, replace the bushing. When the cause appears to be a too rigid connection, install a flexible connector or expansion joint made from a flat strap, in addition to replacing the bushing.

(2) *Chips.* When the main body of the porcelain is intact, but a crack is about to detach a large chip of skirt, protect adjacent skirt and remove the chip with a hammer. Smooth the sharp edges with an abrasive stone to prevent injury to workmen, and paint the exposed surfaces with a weather-resisting material to provide a glossy finish that keeps out dirt and grit.

(3) *Contam ination* Remove deposits of foreign materials. Clean as recommended.

(4) *Tracking.* When there is evidence of flashover, check the bushing voltage rating and surge protection. Clean the bushings. Bushings experiencing frequent flashovers should be reported to the operating department, as this may require a review of the application and associated surge.

e. Metal parts inspection. Metal parts of bushings, including the mounting flange and hardware, should be inspected for fractures, cracks, blowholes in cap and assemblies, and a need for repainting. Fractures and cracks are caused by deterioration of cement, which allows the entrance of moisture that alternately freezes and thaws.

f. Metal parts repair.

(1) Remove fractured, cracked, or defective clamping rings and hardware, and replace immediately.

(2) Wire brush spots down to bare metal, apply a priming coat of paint, allow to dry, and then add a finish coat. Repaint periodically with a good weather-resisting paint.

(3) Bushings that leak quantities of filler compound or oil (especially at the clamping and mounting flange assembly) should be removed from service promptly and a replacement installed. These conditions cannot be readily corrected in the field.

(4) Repairs that involve the baking out or vacuum treatment of insulation, replacement of a porcelain rain shield, or modernizing and rebuilding, should be accomplished in a qualified service depot or manufacturer's shop. This work requires expert techniques, as well as special tools and equipment.

g. Cement inspection. The cement between clamping rings, caps, and porcelain should be inspected for crumbling or chipped surfaces and deterioration that will permit the entrance of moisture. Absorption of moisture and subsequent expansion and contraction, as a result of temperature changes, hasten cement deterioration. Litharge and glycerin cement are particularly vulnerable.

h. Cement repair. It is often more economical and desirable to replace rather than repair a deteriorated bushing.

(1) Make a temporary repair by cleaning porcelain and painting the exposed cemented parts with an insulating varnish in accordance with Military Specification MIL-V-173.

(2) Remove litharge and glycerin cemented bushings at the first opportunity and replace with bushings having mod.ern-type cement.

(3) When loose cement permits movement of porcelain, replace the bushing.

i. Gasket inspection and repair. When inspecting and repairing gaskets, look for leakage of filling materials, deterioration of gaskets, and improper seating of gasket material (especially rubber-like and cork composition). If quantities of filler have leaked from the bushing, replace the bushing immediately. Cork exposed to moisture and air turns dark, crumbles, and loses elasticity and binder. Replace all deteriorated or improperly seated gaskets with new gaskets as recommended by the bushing manufacturer.

Affordable Wire Management, Exhibit No. EX1010
Case No. IPR2024-00182
Page 27 of 201

j. Ground sleeve. Inspection and repair of the ground sleeve includes the following steps:

(1) Check the condition of the ground strap that ties the metal sleeve to the supporting flange, and examine for tight connections.

(2) Replace the ground strap if it is badly corroded.

(3) Tighten the connection.

(4) Where a bushing is installed in liquid-filled apparatus, see that the lower end of the bushing ground sleeve is immersed in the liquid at all times. A ground sleeve is intended to distribute voltage stress longitudinally along the bushing stem, thus preventing the formation of corona above the liquid level.

k. Bushing conductor lead. The following procedures for inspection and repair are recommended:

(1) Look for deteriorated conductor lead insulation, particularly where the lead leaves the bushing stem.

(2) Check the upper end of this type of bushing for evidence of corrosion where the conductor is soldered to the bushing cap.

(3) Remove deteriorated conductor lead insulation; inspect strands for mechanical condition, and retape with varnished cambric tape; then apply l-inch (25 millimeter) linen tape, half-lapped to the required thickness.

(4) Paint with applicable Military Specification MIL-V-173 varnish or other suitable insulating varnish.

(5) Clean bushing cap and porcelain surfaces with soap and warm water, and swab out the tube.

(6) When replacing bushing conductor leads, braze or silver solder the leads and their terminal connections.

l. Line or bus connections. Inspection and maintenance should include the following steps:

(1) See that connections are tight and free from corrosion and dirt. Corrosion and dirt cause overheating of terminals. Contacts that are not tight result in corona discharge and arcing between loose points of contact and cause radio interference. An energized connection suspected of overheating may be checked by fastening an unlighted tallow candle on a disconnect pole, and observing whether or not the candle melts when brought in contact with the connection.

(2) Check for adequate rigidity and see that the connection design does not overstrain the porcelain bushing. Check the foundation for movement.

(3) Check the size of the terminal connector to ensure adequate current-carrying capacity.

(4) Clean dirt and corrosion from connections.

(5) Polish contact surfaces with crocus cloth, install new lock washers, and tighten bolts securely.

(6) Install a terminal connector of the proper capacity.

m. Migration of compound. Inspecting and repairing compound migration should be made in the following manner:

(1) Check the oil and the bottom of the apparatus tank for visual evidence of compound leakage caused by fractured porcelain or leaking gaskets.

(2) If much bushing compound has migrated into the oil or the apparatus tank, replace the bushing with one of a modern design.

(3) Remove fluid from the apparatus tank.

(4) Clean the apparatus tank.

(5) Refill with new or filtered fluid.

n. Internal carbon deposits. Excessive accumulation of carbon should be noted. Electrostatic flux causes free carbon in the oil to collect on porcelain, herkolite, and/or micarta. Free carbon immersed in oil will form frostlike figures that adhere tightly to insulating materials. If enough deposit collects, flashover may result, particularly if moisture is present. Therefore, carbon deposits should be wiped off with suitable solvent, flushed with clean mineral oil, and wiped with a clean lintless rag saturated with clean oil.

o. Arcing gap. Arcing or coordinating gaps, if present, should be free from any obstructions and the gap set at proper spacing.

p. Oil gage. Some bushings are provided with means of indicating the level of the filler. Check these devices for proper operation and see that glass is not cracked or broken.

q. Oil level. Inspect the oil level frequently. Low oil levels may be caused by overfilling or by oil being forced up into any expansion chamber not equipped with a core seal.

3-34. Bushing power factor tests.

The power factor of a bushing (or any other insulator) is an indication of the effectiveness of the insulation to function properly. A low power factor (1 percent or less) is an indication of good insulation. Because of differences in materials, a single power factor test is of little value. However, a series of power factor tests allows the results to be compared, and a trend can be established. Increasing power factors indicate deteriorating insulation and corrective measures should be taken. Power factor testing is recommended for bushings rated over 15 kilovolts and for all bushings, regardless of voltage rating, in substations rated over 5,000 kilovoltamperes.

a. Schedule. Bushings should be power-factor tested at the time of installation and at intervals as given in table 7-l for transformers. Spare bushings should be -power-factor tested when received from the factory, and at approximately 2-year intervals

Affordable Wire Management, Exhibit No. EX1010
Case No. IPR2024-00182
Page 28 of 201

thereafter. For convenience, it is well to schedule such tests to correspond to those applied to other equipment at a given location. In this way, the test equipment and personnel may be used to the best advantage.

b. Equipment. Insulation power factor can be measured by several methods, including the voltmeter-ammeter-wattmeter (Doble) method and the balanced bridge method. A number of power factor test bridges are available and are probably the most convenient way to measure the power factor. Commonly used circuits are described in ASTM D 150. Further information is available in IEEE 62.

c. Test personnel. Power factor testing involves high voltages and fine measurements. Test personnel should be well trained and highly skilled in the operation of the test set being used. For safety, two people should be used to conduct the test.

d. Test conditions. To obtain the most reliable results, power factor testing should be conducted under the following conditions:

(1) If outdoors, the weather should be fairly clear.

(2) Air temperature should be above 40 degrees F (5 degrees C). Power factor tests have little value when made at freezing temperatures.

(3) Relative humidity should be less than a maximum of 80 percent.

(4) Insulation being tested should be dry and clean.

(5) Insulation temperature must be known and should not be less than the air temperature; otherwise, condensation will take place and hot-collar losses will be high because of surface leakage. Temperature may be measured with a thermometer in contact with the porcelain.

(6) Current leakage by creepage along insulation surfaces should be eliminated by the application of the proper guard circuit of the tester. Guard circuits vary with testers of different types, and the manufacturer's recommendations should be followed.

e. Test comparisons. In order to yield better results that can be compared, power factor tests on the same item should be made at the same voltage and frequency. Measurements at different temperatures should be corrected to 68 degrees F (20 degrees C) to facilitate comparisons and establishment of a power factor trend. See table 3-3 for correction factors.

(1) Power factor is a "worst condition" value, and it is necessary to isolate bushings from the rest of the equipment being tested only if the test indicates trouble. In such a case, each item must be tested separately to determine which is failing; a bushing must then be disconnected at both terminals and tested separately.

Table 3-3. Temperature correction factors for power factor[1]

Temperature	Correction factor (K)
50°F (10°C).	1.25
59°F (15°C).	1.11
68°F (20°C).....	1.00
77°F (25°C).....	0.89
86°F (30°C).	0.80
95°F (35°C).	0.71
104°F (40°C).	0.65
113°F (45°C).	0.57
122°F (50°C).	0.51
131°F (55°C).	0.46
140°F (60°C	0.41
149°F (65°C).....	0.37
158°F (70°C).....	0.33

[1]pf at 20°C = pf at T°C x K

(2) A consistent test procedure should be followed on a given piece of equipment in order to satisfactorily establish a trend. Power factor test values of a bushing individually tested, for example, cannot be directly compared to test values obtained when a bushing is connected to a winding or a bus.

f. Ungrounded specimen test. Power factor of a bushing may be determined by attaching the high-voltage lead of the test set to the top terminal of the bushing and the low-voltage lead to the capacitance or power factor test tap (if the bushing has one) as shown in figure *3-l.* The bushing flange is then grounded to the test set and power factor measurements made.

(1) Record temperature of bushing. Connections to the bus at the bushing need not be removed unless such connections seriously affect the readings. Experience in making measurements will facilitate making a decision in this regard.

(2) Some bushings not provided with either a capacitance or power factor test tap may be tested essentially in the same manner, if provisions for isolating the bushing flange from the grounded apparatus tank are present. Under such circumstances, with the bushing flange grounded, the low-voltage lead of the test set is connected to the bushing flange and the test set is grounded to the apparatus tank.

g. Grounded specimen test. Where bushings to be tested have fixed conductors and are not equipped with facilities for making the ungrounded specimen test, the power factor may be measured in the following manner:

(1) Remove top and bottom connections to bushing.

(2) If the bushing cannot be removed, the bushing flange must be insulated from the apparatus.

Affordable Wire Management, Exhibit No. EX1010
Case No. IPR2024-00182
Page 29 of 201

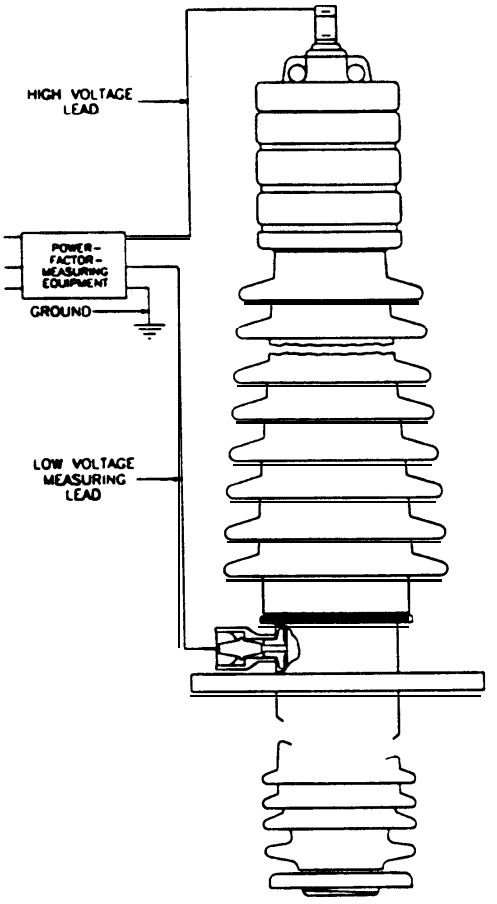

Figure 3-l. Connections for ungrounded specimen power factor test

(3) Connect the high-voltage lead of the power factor test set to the top terminal of the bushing and the low-voltage lead to the bushing support.

(4) Ground the test set to the apparatus tank, and measure the power factor

(5) Record temperature of the bushing.

h. High-voltage cold-guard circuit test. When bushings to be tested have detachable cable conductors, they may be tested in the following manner:

(1) Remove the bushing terminal and insulate the conductor from the bushing tube by stuffing a small amount of insulation into the space between them. If bushing is equipped with an insulating head, it is only necessary to remove the connector between the upper and lower rings.

(2) Clean the porcelain ring of the insulating head.

(3) Connect the guard circuit to the cable lead and the high-voltage lead of the test set to the bushing tube.

(4) Ground the mounting flange of the bushing.

i. Collar tests. The overall power factor test on bushings may be performed by placing a flexible conducting rubber or metallic foil or braid collar around the porcelain under the first top skirts; connecting the collar to the test cable guard circuit; grounding the mounting flange; and applying test voltage to the central conduct of the bushing. The collar should be of a type specifically designed for bushing collar tests. Figure 3-2 shows connections for hot- and cold-collar tests.

(1) *Hot-collar test.* This test is performed by grounding the central conductor and the mounting flange and applying test voltage to the collar on the bushing. When hot-collar losses are found to be high because of high relative humidity creating surface leakage, the bushing should be cleaned. Furniture or floor wax should be applied with a clean lintless cloth. The wax should dry for 5 minutes and then be rubbed briskly with a clean cloth to obtain a high polish.

(2) *Cold-collar test.* This test is performed by grounding the collar and mounting flange and applying test voltage to the central conductor of the bushing. The difference between the overall watt loss and the cold-collar loss is known as watts difference. In general, there appears to be no advantage in the cold-collar test. The hot-collar test is recommended.

j. Interpretation of power factor test results. The limiting value at which different test operators remove bushings from service ranges from 6 to 12 percent power factor on bulk-type bushings and from 2 to 6 percent on plastic and oil-filled bushings. These ranges are based on bushing temperatures of 68 degrees F (20 degrees C), the power factor values being higher at higher temperatures. Because the measurement of power factor is highly specialized and power factor values vary with different types and makes of equipment, the procedure following such tests should be based on the recommendation of the qualified persons engaged to perform the tests.

3-35. Bushing insulation resistance test.

Insulation resistance tests measure insulation losses by applying a dc voltage. This test is not so widely used as the ac power factor test for bushings; but, in the absence of facilities to test power factor, insulation resistance tests on bushings may prove useful.

a. Procedures. The general procedure for insulation resistance testing is described in chapter 5, section VII. The following paragraphs contain specific details for testing bushings.

b. Test values. See table 3-4 for requirements for insulation test values. Resistance readings should be carefully compared in one or two ways.

Affordable Wire Management, Exhibit No. EX1010
Case No. IPR2024-00182
Page 30 of 201

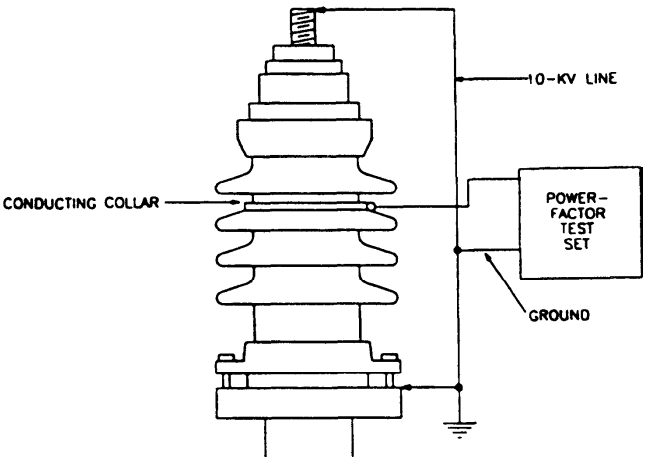

HOT-COLLAR TEST

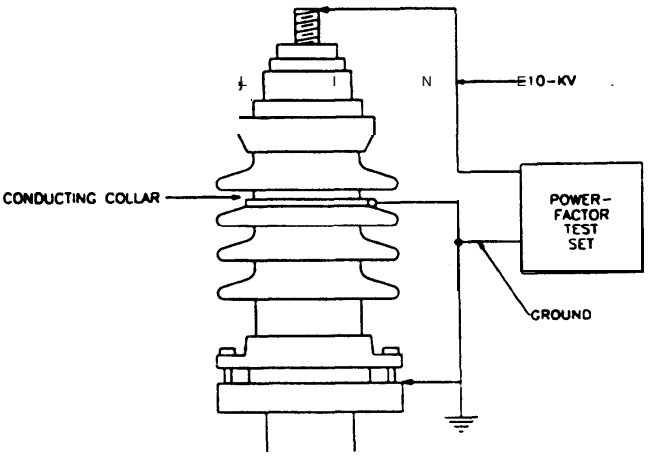

COLD-COLLAR TEST

Figure 3-2. Connections for hot- and cold-collar tests

Table 3-4. Insulation resistance tests on electrical apparatus and systems[1]

Maximum voltage rating of equipment	Minimum test voltage, dc	Recommended minimum insulation resistance in megohms
250 volts	500 Volts	25
600 volts	1,000 Volts	100
5,000 volts	2,500 Volts	1,000
8,000 volts	2,500 Volts	2,000
15,000 volts	2,500 Volts	5,000
25,000 volts	5,000 Volts	20,000
35,000 volts	15,000 Volts	100,000
46,000 volts	15,000 Volts	100,000
69,000 volts	15,000 Volts	100,000

[1]This table is reproduced from MTS-1993.

(1) Readings taken on a number of similar bushings at the same time.

(2) A series of readings taken on the same bushings at different times.

c. Test conditions. It is essential that suitable conditions be maintained during tests.

(1) Bushings cannot be checked while connected to the windings of transformers.

(2) Bushings must be dry and warm enough to prevent the condensation of moisture from the atmosphere.

(3) The weather should be reasonably clear and the relative humidity less than 80 percent.

(4) Record the bushing temperature at time of test.

(5) Adjust resistance value to 68 degrees F (20 degrees C).

Affordable Wire Management, Exhibit No. EX1010
Case No. IPR2024-00182
Page 31 of 201

CHAPTER 4

OVERHEAD DISTRIBUTION

Section I - ASSOCIATED OVERHEAD DISTRIBUTION GUIDANCE

4-1. Relevant overhead distribution guidance.

Maintenance work involving aerial line changes requires an understanding of the basic design premises of overhead construction requirements.

a. Location of electric circuits on poles. Where more than one electric circuit is carried on a pole, the highest voltage is at the top down to the lowest voltage above any communication circuits. Through wires of the same voltage level should be carried above local wires (those which are tapped frequently). The two or more wires of a circuit should always be carried in adjacent positions. To facilitate troubleshooting, wires of a circuit should always take the same positions on all poles, except where long lines have been provided with a transposition (change of line positions) to reduce electrostatic and electromagnetic unbalance.

b. Joint electric supply and communications circuits on poles. Electrical supply wires must be carried above communication circuits. Minimum clearances between supply wires and communication wires are specified in the NESC.

4-2. General construction guidance.

Rights-of-way for navigable water crossings and structure identification and climbing space free of obstructions must meet the following requirements.

a. Rights-of-way requirements. When the system is being extended across navigable waters within the United States, permission must be obtained from the nearest District Office of the U.S. Army Corps of Engineers. When crossings are made in waterways under the jurisdiction of other authorities, those authorities should be consulted.

b. Identification requirements. Poles, towers, and other supporting structures should be marked or numbered to facilitate identification by employees authorized to work on them. If the facility has no consistent identification method, it is recommended that such a system be implemented.

c. *Climbing space.* Despite the fact that, where practicable, nearly all pole work will be done from a bucket, the need for climbing space still exists. Sufficient space must be reserved for positioning the bucket to enable the linemen to perform their tasks; and actual climbing may be required on occasions. The recommended facility climbing space requirement is a square 30 inches (750 millimeters) on each side. Figures 4-l and 4-2 show details for various conditions. Any maintenance, repairs, replacement, or addition must be done in a way that maintains at least the minimum climbing space required by the NESC which may be less than the recommended space.

d. Obstructions. Poles and other structures should be kept free from posters, banners, nails, radio antennas, signs, or other devices that might interfere with safe working conditions.

Section II - DEFINING VOLTAGE NOMENCLATURE

4-3. Voltage terminology.

Voltage terminology can be very confusing, especially if there is no mutual understanding as to whether the term is defining a voltage level, a delivery usage, or an origination point.

4-4. Voltage level classification.

The accepted standard for voltage classifications is ANSI/IEEE 141. Low voltage is used for 600 volts or less, medium voltage is used for above 600 volts to 69,000 volts, high voltage is used for 115 to 230 kilovolts. Any voltage above this is called ultra-high voltage. The term high voltage is most often used when medium voltage is meant.

4-5. Voltage delivery usage.

There is no standard for delivery usage; but transmission system is used for high and ultra-high voltage systems; subtransmission system for 46- to 69-kilovolt systems; and distribution system is used for 35 kilovolt down to and including low-voltage systems. Utilization voltage is also used to describe the voltage from which the equipment directly operates, which may in some cases be a medium-voltage input.

4-6. Voltage origination point.

Input to a device which transforms voltage from one level to another is called a primary circuit, while the device's output is called a secondary circuit. While most transformers are used to step down voltages, there are cases of step-up systems; so a primary circuit could have a lower voltage than a secondary circuit.

Affordable Wire Management, Exhibit No. EX1010
Case No. IPR2024-00182
Page 32 of 201

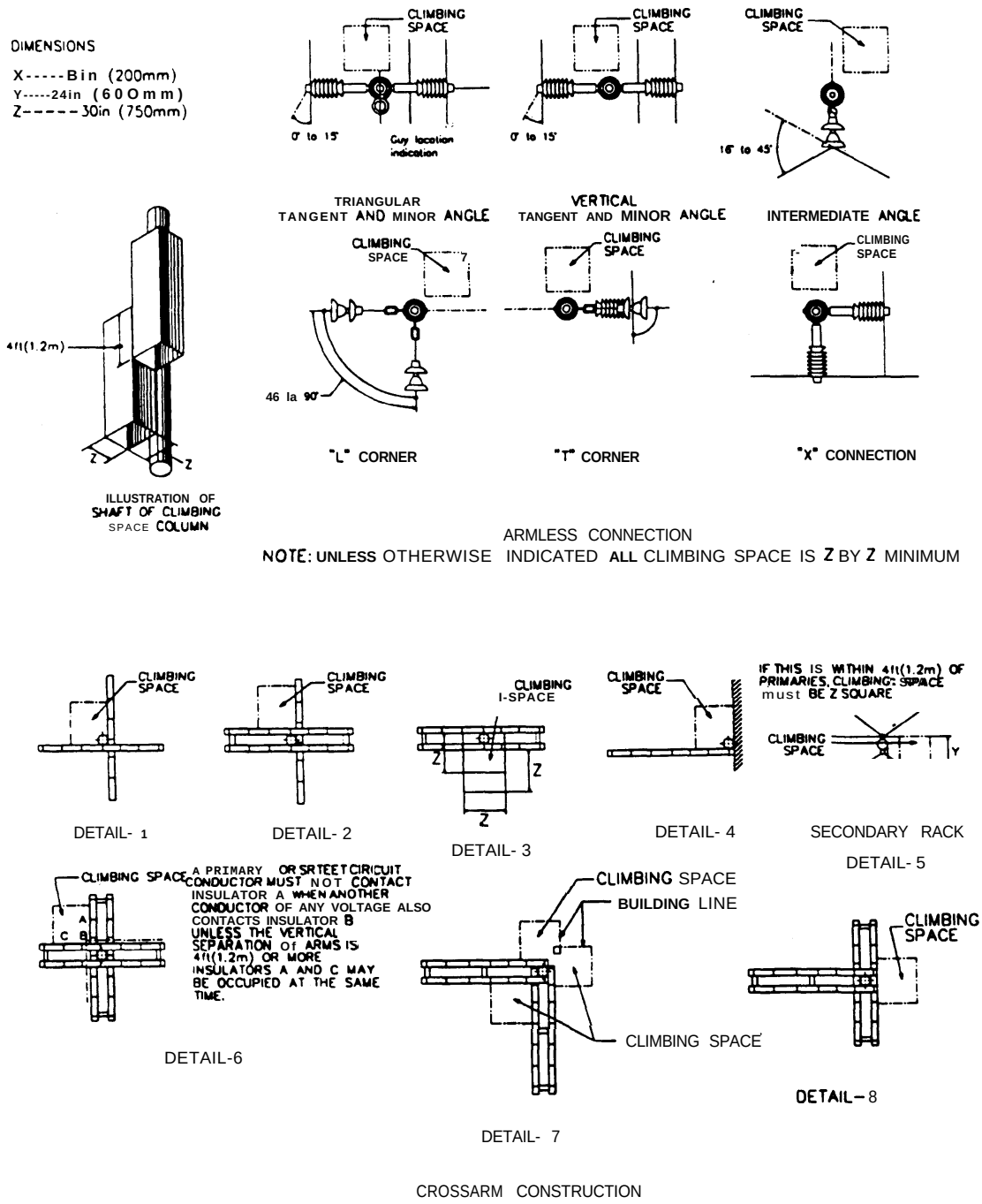

Figure 4-l. Details showing various horizontal dimensions necessary to provide recommended climbing space

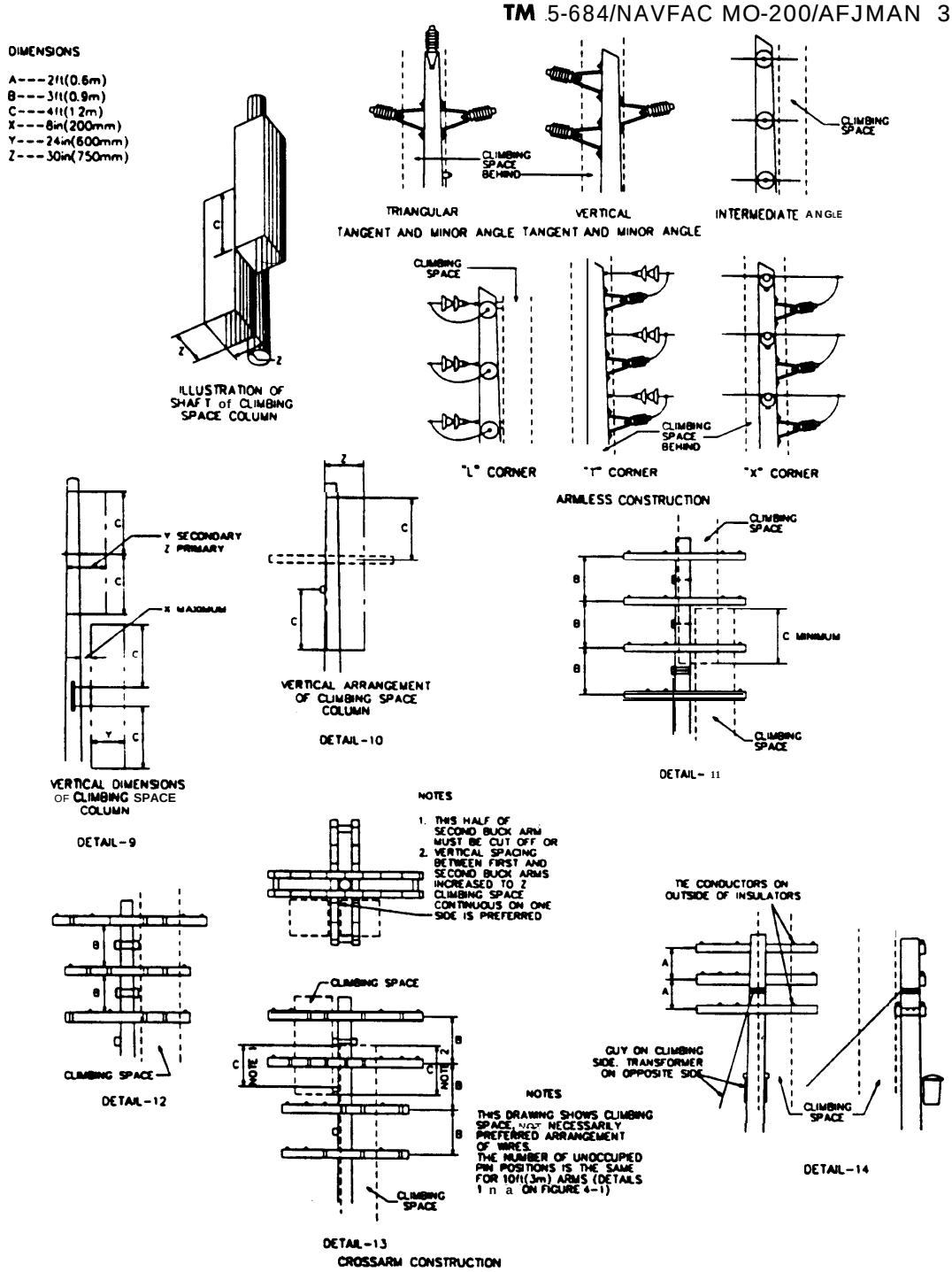

Figure 4-2. Details showing various vertical dimensions necessary to provide recommended climbing space

Affordable Wire Management, Exhibit No. EX1010
Case No. IPR2024-00182
Page 34 of 201

4-7. Voltage terminology usage in this manual.

The convention understood by most persons qualified to perform various electric line-work operations, that is, for aerial, underground, and at-grade work, is the one used in this manual, unless otherwise stated. Therefore, primary circuits have a medium-voltage rating; secondary circuits have a low-voltage rating.

Section III - TYPES OF MAINTENANCE

4-8. Component line maintenance.

The various components which make up an overhead line system include poles to carry and insulators to support the line, along with line connectors and guys. Most poles encountered will be wood, and most primary line conductors will be bare. There are conditions, though, which justify the increased cost of metal or concrete poles or primary overhead insulated lines or cables. Increasing use of armless construction will minimize, but not completely eliminate the use of crossarms. Pad-mounted, compartmental-type transformers are also replacing, to a large degree, many unaesthetic aerial platform-mounted, transformer installations. The discussion of maintenance necessary for the components mentioned assumes all work will be done on unenergized lines (unless specifically noted otherwise) and that all clearance procedures required to provide service, as mandated by TM 5-682, NAFVAC P-1060, or AFM 32-1078, have been followed.

4-9. Other types of line maintenance.

Trees adjacent to overhead lines pose a line clearance problem, requiring both checking for interferences and trimming on a planned time cycle. Maintenance methods on energized overhead power lines require special training and tools to meet safety requirements, but can reduce service interruption times where operational requirements do not permit the necessary outage period.

Section IV - WOOD POLES

4-10. Life span of wood poles.

The average life span of a full-length pressure-treated wood pole can be maintained and even extended another 10 to 20 years with a proper inspection, treatment, and reinforcement program.

4-11. Supplementary data on wood poles.

Pertinent information is covered in appendix C on why poles fail, initial installation, types of wood used for poles, influence of local conditions, and decay patterns.

4-12. Wood pole record keeping and inspections.

Proper record keeping is the basis for a systematic program of pole inspection and maintenance. These records will determine courses of actions based on actual examinations, eliminate much guesswork, extend actual pole life, and accumulate the historical data required to evaluate future pole maintenance costs.

a. Essential record data. The first point is to record the pole location, identification number, date of installation, and a manufacturer's pole brand. Then poles should be rated based on the initial pole scheduling inspections. Ratings should indicate soundness of pole, any treatment provided during inspections, and any failed poles marked for safety because replacement or reinforcing is needed immediately. A sample format for recording data is shown in figure 4-3. The format shown should be revised as needed to meet local requirements.

(1) *Interpretation of pole brands.* An understanding of the brands on the side of a pole is necessary for proper inspection, record keeping, and reporting. An example is shown in figure 4-4. The brand is near eye level and is generally burned into the wood, though some pole suppliers use a countersunk aluminum disk.

(2) *Pole brand indications.* The codes for species and preservatives treatments are as follows:

(a) Timber species are coded as SP-southern pine; WC-western red cedar; DF-Douglas fir; WL-western larch; NP-northern (red or Jack) pine; LP-lodgepole pine; WP-ponderosa pine.

(b) Preservatives are the oil-borne type coded as A for pentachlorophenol; B for copper naphthenate; C for creosote, and the water-borne type coded as CCA for chromated copper arsenate and ACZA for ammoniacal copper zinc arsenate. Only copper naphthenate is a nonrestricted-use pesticide.

(c) Retentions are shown with a number for the pounds per cubic foot. On poles which show no retention figure, the pole was not pressure treated and should be rejected.

(3) *More data. See* AWPA M6 for more complete information on brands.

b. Initial pole scheduling inspections. Two types of initial pole scheduling inspections should be pro-

Affordable Wire Management, Exhibit No. EX1010
Case No. IPR2024-00182
Page 35 of 201

POLE INSPECTION AND MAINTENANCE RECORD

Inspector SPARKS, J Date 3 OCT 94

Map 78-1 Line Location SPRIGGS RD Starting Point SUBSTATION 2

Pole No.	Codes From Pole Brand						Original treatment (code)	Inspection and maintenance (code)	Other Maintenance/Comments
	Length and class	Species	Supplier	City	Year	Preservative			
7918	40-3	RD CEDAR	POLES INC	TANK	84	TMT AA	BUTT	2	CK IN 6 MONTHS
7919	40-3	RD CEDAR	POLES INC	TANK	86	TMT AA	10	1	

Code for Type of "Original Treatment"

Code	Explanation
8 (or 10)	Pressure treated--record pounds per cu. ft. shown on brand.
FLNP	Full-length non-pressure lreated (no pound shown on brand).
Butt	Butt treated

Code for "Inspection and Maintenance"

Code	Explanation
1	Pole • ound, no evidence of decay or olher damage. groundline treatment applied. Reinspect In 7-10 years.
2	Some evidence of minor decay. Groundline treatment eppllied. Reinspect lo S-7 years.
3	Moderately • dvanced deca but pole well above minimum permissibgroundlime c rcumfemnce. Groundline treatment applied.Reinspect 1n 5-5 years.
4	Extensive decay. No groundline treatment applied. Relnepect. replace or stub within 1 year:
5	Failure. Replace or • lub promptly.*

* Pole marked for safety.

Figure 4-3. Sample format for recording pole inspection and maintenance data

vided and will be used to determine future inspection frequencies.

(1) *Spot inspections.* Poles should be examined 8 to 10 years after a line is built. This spot inspection will decide courses of action as indicated below:

(a) When the examination of a representative number of poles (extended to the total number of similar poles in the line) shows there is advanced decay in 1 percent or more of the poles, or some minor decay in 5 percent or more of the poles in the line, a pole-by-pole maintenance program should be scheduled as soon as practicable.

(b) When the spot inspection shows there is only some minor softening of the wood in less than 5 percent of the poles in the line, the pole-by-pole maintenance program may be deferred 3 to 5 years.

(2) *Pole-by-pole inspections and maintenance.* This program should be planned for a line 13 to 15 years after construction, though the spot inspection will determine more precisely when it should be started.

Affordable Wire Management, Exhibit No. EX1010
Case No. IPR2024-00182
Page 36 of 201

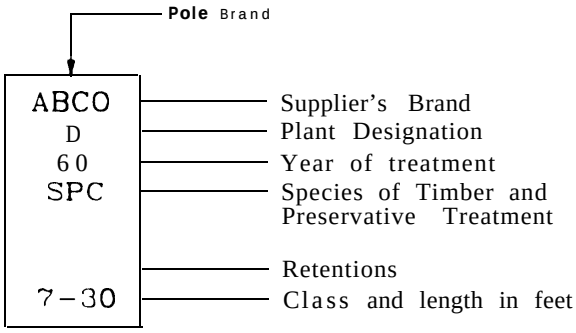

Figure 4-4. Typical pole brand and key

4-13. Wood pole maintenance crew instructions.

The crews used for pole inspections should be provided with instructions as to inspection precautions, duties, safety requirements, and use of equipment. Crews should always review any pole history available.

a. Spot examination crews. Crews of two or three people should be provided with an experienced crew leader.

b. Pole-by-pole crews. Crews of three to five people may be provided by the facility or work may be done by contract personnel. In either case, an experienced person employed by the facility should closely supervise the work.

c. Crew duties. The duties of the crew consist of observing the pole tops, crossarms, and attachments; inspecting the pole to a height that can be conveniently reached from the ground; excavating and inspecting the pole below the ground line; applying groundline treatment; keeping accurate records; and any other work, as appropriate.

d. Safety precautions. Follow all safety regulations described in TM 5-682, NAVFAC P-1060, or AFM 32-1078. Safety requires that any pole that has lost strength from decay or other cause to the point of being hazardous should be replaced or reinforced. Simple economy, however, requires that such condemnation be arrived at only after careful inspection, including measurement of groundline circumference when only groundline decay is involved. This means that lines may contain many poles that have lost a certain amount of their original strength and thus should be climbed only after taking proper precautions, such as guying. Pikes poles (a tool used in raising poles) are not permitted for support while personnel are working on poles. Before climbing a pole, the lineman should use spot examination methods to check a pole for which there is no recent inspection record. No inspection member who is not a lineman should be instructed to provide maintenance requiring a lineman's qualification.

e. Inspection equipment. For convenience, the following list shows the minimum amount of equipment usually needed. It may be added to according to type of soil, terrain, or extent of work to be undertaken.

(1) A shovel for digging around the pole and a tamper for use when the soil is backfilled.

(2) A flat-bladed spade, a suitable scraper, and a chipper to remove decayed wood.

(3) A wire brush for removing dirt and decayed wood.

(4) A pole prod or a small blunt tool for probing the pole for decay below ground line, such as a *dulled* ice pick or a screwdriver.

(5) An increment borer and wood plugs.

(6) A 1- to 2-pound (0.5 to 1-kilogram) hammer for sounding poles and for driving wood plugs.

(7) A tape for measuring the groundline circumference of the pole and a 6-inch (150-millimeter) rule.

(8) A flashlight and a binocular (6 x 30) for observing the upper portion of the pole above the inspector's groundline vision.

(9) Previous records and blank forms for recording all details of work.

(10) Dating nails to indicate year of inspection or groundline treatment and tags to indicate rejected poles and dangerous poles.

(11) Preservative and application equipment for groundline treatment.

(12) A first-aid kit to handle minor injuries.

f. Recommended time of year: If possible, inspect during the summer months when preservatives need not be heated, digging is easier, and the pole is drier. A dry pole makes examination for decay more positive, and ensures better penetration of preservatives.

4-14. Wood pole spot inspection procedures.

The spot inspection should not be confined to poles most convenient to reach, as this could give an absurd indication. A sufficient number of poles in a line should be sampled in arithmetical progression, checking every alternate pole or every third or fifth pole, depending upon the uniformity of conditions.

a. Visual. Make visual inspections from the ground using binoculars and flashlights to check for cracks, shell rot, knots, hollow spots, woodpecker holes, and burned spots.

b. Probing. A long probe or prod in the form of a 1-foot (0.3-meter) steel bar with a blunt point has been found useful in spot inspecting poles when a pattern of external decay is established. Such prodding should be done with care so as not to jab holes into the wood. As an improvement on this method, a special prod or impaction tool is now on the market.

Affordable Wire Management, Exhibit No. EX1010
Case No. IPR2024-00182
Page 37 of 201

This tool has a sleeve-like hammer; and, through vibrations carried to the hand, it is possible to detect decay below the ground line.

c. Sounding. Make a sound test to check for internal decay.

d. Nondestructive pole testing. The Electric Power Research Institute (EPRI) has developed a "PoleTest™" instrument that analyzes the sonic waves it sends through the pole to indicate the strength of the pole keyed to its wood species and diameter.

(1) *Components.* The complete testing setup consists of a programmed dedicated instrument, an input sensor, a pendulum impactor, output sensor, and impact nail. Specialized tools are provided to install pole-mounted items.

(2) *Operation.* The operator designates the wood species, diameter and length of the pole. After the correct input sequence and pendulum impacts, the unit will display the pole fiber strength, diameter, and species. From this information, the conformance of the pole's strength to NESC requirements can be determined by comparison with the required maximum fiber stresses for the various classes of poles given in ANSI 05.1.

(3) *Engineering judgement.* Interpreting the results requires engineering judgement. Testing should be made at the groundline unless there are more critical stress locations, that is points of damage or points of line loading. Since the existing bending strength of the pole determines whether the pole has adequate strength, the orientation of sensors should normally be perpendicular to the direction of the line.

e. Groundline inspection. If the soil is soft enough, probing through the soil at two or three places several inches (centimeters) below the ground line may reveal sound or decayed wood without excavation. Excavation should remove soil only where one or two major ground level separations (checks) are present in a pole.

(1) *Excavation.* Soil may be removed to a depth of 8 to 12 inches (20 to 30 centimeters) and the below-ground pole surface examined or probed.

(2) *Soil sterilization.* Excavation aerates the soil and encourages the growth of fungi. When new pressure-treated poles are first installed, some of the preservative diffuses into and sterilizes the soil immediately adjacent to the pole. When the soil around the pole is disturbed for any reason, or the pole is relocated, the soil must be sterilized. Use 2 or 3 gallons (8 to 12 liters) of an approved preservative solution and thoroughly mix with the backfill. Many effective pesticides that are easily applied in most soils prevent subterranean termite attack; kill fungi and weeds in the treated area; are very toxic; and must be approved for use. None of the preservative should be exposed when backfilling is completed. Personnel applying pesticides must be certified in accordance with applicable directives.

(3) *Backfilling.* Replace with sufficient resterilized soil tamped to avoid any water-collecting depressions.

f. Internal inspection. One or two borings should be taken above or below the ground line when sounding or other inspection methods cause a doubt as to the sturdiness of the interior pole condition.

g. Accuracy. When a reasonable accurate determination as to the condition of poles cannot be made by spot inspection methods, the more thorough procedures described for the pole-by-pole inspection should be followed. For these cases, the excavated poles should be groundline treated and so recorded.

4-15. Wood pole-by-pole inspection procedure.

Before any extensive inspection or maintenance work is begun, it should be known or ascertained that the line (or individual pole) can be expected to remain in the same position for several years without relocation. Before proceeding with the inspection, the upper portion of the pole should be observed from the ground to make sure it has not been badly damaged by woodpeckers, lightning, or other causes that would require replacement regardless of the groundline condition. Nondestructive pole testing may be used where "PoleTest" equipment is available. (See para 4-14.) Otherwise sounding and test boring may be necessary.

a. Sounding. If the pole condition appears good, then the pole should be sounded. This is a method of checking for interior decay above the ground line. It is not an infallible test and requires considerable practice to attune the ear to meaningful sounds. It should not be relied upon until considerable experience has been acquired.

(1) *Method.* With a 1- or 2-pound (0.5 to 1-kilogram) hammer, strike the pole squarely and firmly all around the pole from the ground line to as high as can be conveniently reached, while listening to the sound. A good pole has a solid ring, whereas one containing decay may give a hollow sound or dull thud. Often, however, such things as checks, separations, shakes (separation along the grain of the wood, usually occurring between the annual rings due to causes other than drying), loose slivers, loose molding, guys, load carried, wood density, moisture content, and the pole loading will affect or alter the resonance.

(2) *Purpose.* This method avoids needless excavation of poles found badly decayed internally above ground and assists in detecting the most likely

Affordable Wire Management, Exhibit No. EX1010
Case No. IPR2024-00182
Page 38 of 201

points for boring to determine the extent of any internal decay above ground.

b. Test boring. Whenever there is reason to suspect possible internal decay above or below the ground line, the pole should be bored with an increment borer as shown in figure 4-5. It is usually not necessary in cedar poles due to their decay resistant heartwood.

(1) *Increment borer. An* increment borer consists of three parts-the borer, the extractor, and the handle, which also serves as a receptacle for the other two parts when not in use. The tool is made of the highest-quality steel to withstand the force applied, though the borer has a cutting edge which must be protected from abuse. When boring below the ground line, the pole surface at the spot bored should be thoroughly cleaned of soil and grit by shaving or brushing. Bore toward the center of the pole, applying steady pressure to start, and in as nearly a horizontal line as possible. If any slant is necessary, it should always be upward to prevent any later water accumulation. The core is removed with the extractor by backing the borer a half turn after the extractor is shoved in, so as to break off the core before withdrawal.

(2) *Plugging bored holes.* All bored holes must be plugged by hammering in a tight-fitting treated wood plug as shown in figure 4-6, regardless of whether the pole needs to be replaced. Habitually and promptly drive a plug in each hole before boring another or before proceeding with other work. Otherwise, a bored hole may be overlooked, opening the way for future internal decay. The plugs, made of doweling, may be obtained from most pole suppliers. Those pointed on one end are preferable but not required. They should be 3 or 4 inches (80 to 100 millimeters) long with a diameter l/32 inch (0.8 millimeters) larger than the hole bored to provide a snug fit. The borer, an adequate supply of plugs, and a hammer should be kept together as a kit.

(3) *Evaluating test borings.* The extracted core should be carefully examined for wood integrity or evidence of decay, extent of any decay pocket, and the amount of original preservative in the wood. Decay will be evidenced by crumbly wood in part of the core. If a pole is badly decayed, a core may not be withdrawn intact. Borings may sometimes be soft and moist, but not decayed, if preservative is present and the wood fibers are strong.

(a) Preservative appearance. In sound poles, the preservative will be plainly visible, especially if it is creosote. In good original treatment, it extends the depth of the sapwood (table 4-l shows sapwood thickness). Some borings will show a heavy absorption of preservative, while in others it may appear in bands, giving the core a striped appearance. (Annual growth rings comprise hard dark summerwood and softer, sometimes spongy, springwood. 'Usually the summerwood absorbs more preservative in the timber species that are suitable for poles). In poles treated with pentachlorophenol (penta) solution, the oil carrier may not be visible, even though the penta itself is present in sufficient amount.

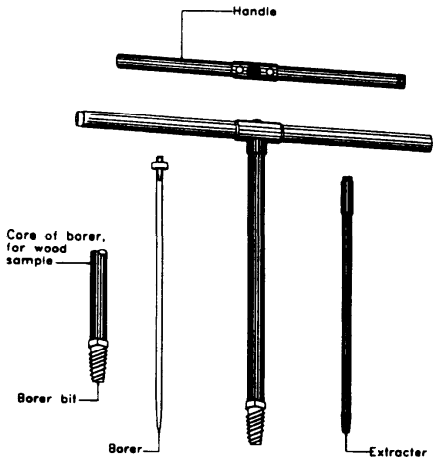

Figure 4-5. The increment borer

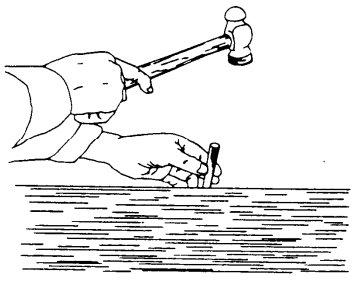

Figure 4-6. Sealing a test hole with a treated wooden plug

Table 4-l. Sapwood thickness in poles

Species	Sapwood thickness (inches)			Sapwood thickness (millimeters)			Natural heartwood decay resistance
Western red cedar	0.5	to	1.25	13	to	32	High
Douglas fir	0.75	to	2.5	19	to	64	Moderate
Western larch	0.5	to	1.5	13	to	38	Moderate
Jack pine.	0.75	to	2.0	19	to	51	Moderate
Red (Norway) pine..	2.0	to	4.0	51	to	102	Moderate

Affordable Wire Management, Exhibit No. EX1010
Case No. IPR2024-00182
Page 39 of 201

Table 4-l. Sapwood thickness in poles (continued)

Species	Sapwood thickness (inches)			Sapwood thickness (millimeters)			Natural heartwood decay resistance
Southern yellow pine.	2.0	to	4.25	51	to	108	Low to moderate
Lodgepole pine.	0.5	to	2.0	13	to	51	Low
Ponderosa pine	2.0	to	3.5	51	to	200	Low

(b) Condition rating. For practical purposes, the condition of a pole should be rated on its wood integrity or on the extent of any decay. While the amount of preservative present in one pole as compared with another should be taken into consideration in the rating, a high degree of accuracy in this respect requires laboratory methods or special apparatus.

(c) Effect of sapwood thickness. Table 4-l shows the average thickness of the sapwood in the timber species which are most often used for facility poles. It will be noted that the species with thin sapwood, which consequently receive a shallower penetration of preservative, generally have a more durable heartwood. However, long life in poles is more dependent upon effective preservative treatment. Since the thicker sapwood species are capable of a deeper treatment, they will often yield the longest average life.

c. Groundline inspection. If the inspection of the above-ground portion of the pole indicates that replacement is necessary, there is no need for below-ground inspection. However, if the above-ground portion is substantially intact or adequate for treatment in place, continue with the below-ground inspection. Sampling procedures may be used if the poles can be grouped by species and class, age, and conditions of exposure to damage. Every third or fourth pole should be inspected below the ground line. Any unsatisfactory conditions found during sampling will indicate the need for inspecting more or all of the poles in the group. Use the following method for below-ground inspections:

(1) *Excavation.* If the sound test indicates no serious internal decay above ground (verified by borings when in doubt), the next step is excavating the soil to about 18 inches (450 millimeters). It may be necessary to excavate deeper in dry or porous soils, and this can be determined as the work progresses. When there is danger of toppling the pole by digging, provide temporary propping of poles. The hole should be wide enough to permit use of the borer below the ground line. Care must be taken not to cut or disturb the ground wire.

(2) *Inspection.* With a blunt tool, probe the surface of the pole gently below the ground line to see if the wood is intact and firm or if decay is present as evidenced by soft, spongy wood. Close attention should be given to the vicinity of any separation checks. If the ground is wet, the wood may be soft but not decayed, so examine a sliver of the wood to see if it breaks easily or crumbles. Look and smell for preservative on the surface of the pole (a musty smell often indicates active decay). Remove as much decayed wood as possible with the spade and clean the surface with a wire brush. Open pockets of decay and determine their extent by probing. Interior decay at the ground line may be checked by taking borings.

(3) *Measuring pole circumference.* After removal of all decayed wood, the remaining circumference of the pole just below ground line should be measured. Deduction from this measured circumference is made for any external or internal decay pockets in order to determine whether the pole meets the minimum circumference permitted by the NESC.

(a) If the ground-line circumference is below the permissible minimum, the pole should be promptly replaced or reinforced.

(b) If the ground-line circumference is above the permissible minimum, the pole should be ground-line treated as covered in section VI.

4-16. Determination of wood pole adequacy.

When inspections reveal heart rot; splits; lightning, insect, bird, or vehicle damage; or other apparent weaknesses, these conditions should be reported so that the adequacy of the pole to sustain its loads may be evaluated by engineering personnel. Whenever the condition requires backfilling to any degree more than that for spot inspection, provide groundline treatment as covered in section VI. Test wood pole stubs, as required for the wood poles they help support. Steel stubs should be inspected to see that the installation is in good condition and holding properly.

a. Replacement. If the diameter of the pole has decreased more than about 15 percent due to damage or decay at the ground line, or if the diameter of the heart-rotted section as determined by boring is more than about 30 percent of the total diameter of the pole, it should be scheduled for replacement as soon as possible.

b. Reinforcement. In many cases, a pole will decay at the ground line but the wood above will be

Affordable Wire Management, Exhibit No. EX1010
Case No. IPR2024-00182
Page 40 of 201

good. In such cases, especially if the pole contains several lines or equipment, pole reinforcing may be a more economical (and fully satisfactory) solution than providing a new pole. The pole must be sound from about 15 inches (400 millimeters) above the ground line to the pole top, and preservative should be applied under pressure to prevent spread of the groundline decay into healthy wood.

c. Pole treatment. Poles in place are exposed to weathering and decay, which is usually most severe at the ground line. In some cases, the upper part of the pole will have decayed to only a small degree, and preservative treatment to extend its useful life will be economical. Poles may have to be straightened because deterioration or replacement has caused them to be out of line. Guying, raking, or otherwise sustaining the pole load may permit line straightening, if the butt of the pole is kicked over while leaving the top of the pole in the same place, or if both the top and the butt of the pole are moved as necessary. Moving the butt means that groundline treatment will also be necessary. The cost of pole replacement, particularly of a large, heavily-loaded pole, can justify considerable effort and expense in extending the useful life of a pole in place. See section VI for information on treatment.

4-17. wood pole replacement.

It is recommended that new poles be fully treated with a NRECA WQC pressure treatment to ensure that the maximum service life potential is obtained. Butt treatment and similar partial treatment methods are not acceptable.

a. Installation. When a new pole does not have to be replaced in the same h.ole as the old one, setting the new pole near the old location, including 'attachment of the equipment and conductors to the new pole before removing the old one, may be more convenient and safer.

(1) *Line wires.* Before any pole is cut off, the top of the pole must be held or guyed in four directions. In most cases, the line wires can be relied on to hold the pole in conformity with the line direction, while guys or pike poles are required to hold it in the other directions.

(2) *Service-drop conductors.* Free service-drop conductors; do not count on them to hold a pole because any strain might pull the service-drop brackets off the buildings.

(3) *Energized replacement.* If a pole must be replaced with conductors energized, the wire must be properly covered with rubber protective equipment designed for this purpose, so work on the pole can be done safely as covered in section XV

b. Pole setting. Poles need to be set in accordance with ground conditions. For normal firm ground, minimum pole-setting depths are given in table 4-2. In other types of soil, pole-setting depths need to be increased or decreased, in accordance with the local utility's practice, dependent upon whether the ground tends to be swampy or rocky.

Table 4-2. Pole setting depth

Pole length. overall		Setting depths			
		Straight lines		Curves, corners and points of extra strain	
Feet	Meters	Feet	Meters	Feet	Meters
30	9.0	5.5	1.7	5.5	1.7
35	9.0	6.0	1.8	6.0	1.8
40	9.0	6.0	1.8	6.5	2.0
45	9.0	6.5	2.0	7.0	2.1
50	9.0	7.0	2.1	77.5	2.3
55	9.0	7.5	2.3	8.0	2.4
60	9.0	8.0	2.4	8.5	2.6
70	9.0	9.0	2.8	9.5	2.9

4-18. Wood pole reinforcement.

Pole reinforcement technology has developed several methods of pole repair which can restore poles to their original groundline strength. Engineering personnel should evaluate the selected method to ensure that the proposed installation is adequate.

a. Stub pole. A length of pole of the same size as the existing pole, and long enough to extend from the butt of the pole to about 5 feet (1.5 meters) above the ground line, is set flush alongside the existing pole. Follow criteria for setting a new pole and band it to the existing pole at the top and about 15 inches (400 millimeters) above the ground line. Figure 4-7 shows details for fastening the stub pole to an existing pole.

b. Steel reinforcing. If several poles need reinforcing, steel reinforcing may be more economical than the use of stub poles. The steel reinforcement consists of a "C" shaped galvanized steel section (as shown in figure 4-8), which is pneumatically driven to below the pole butt and then strapped to the existing pole. The equipment for driving the reinforcing is specifically designed for the purpose, but its use will be more economical than digging Holes for several stub poles. Although the steel reinforcing can be installed by in-house forces, it would probably be advantageous to have this work done by a firm specializing in this service. Steel reinforcing also provides extra protection from vehicles in congested areas. Engineering is required to ensure proper installation since the overall strength of the steel truss and pole combination depends on the strength of the banding system.

Affordable Wire Management, Exhibit No. EX1010
Case No. IPR2024-00182
Page 41 of 201

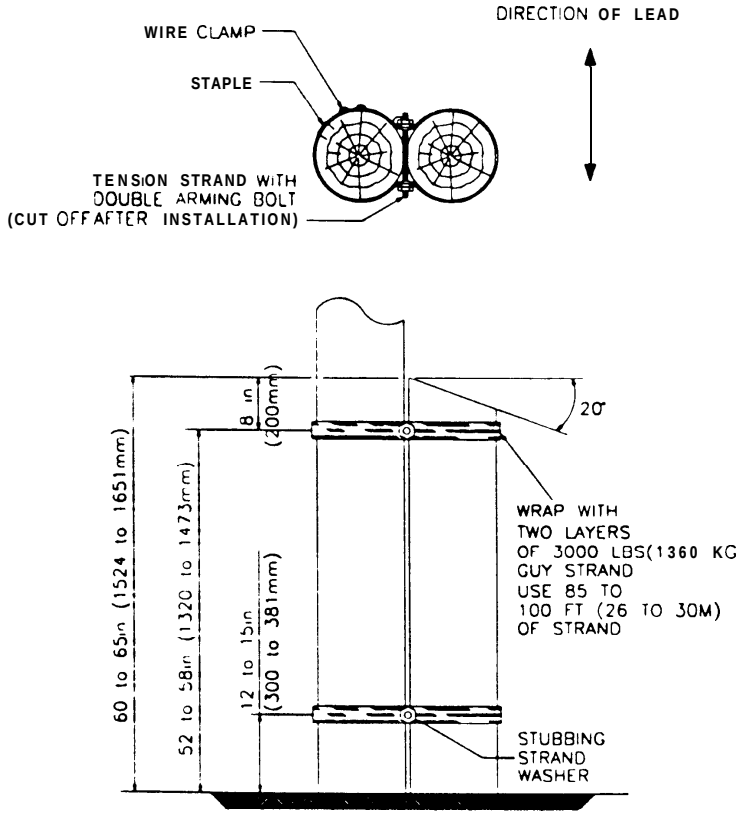

Figure 4-7. Wood stub pole

c. Compound set methods. There are a number of compound set methods. Engineering evaluation should select the appropriate method.

(1) *Compound.* The simplest method requires a compound (mixed in a completely self-contained mixing unit) which fills a hole slightly larger than the pole diameter. It is suitable also for straightening poles.

(2) *Compound and casing.* The decaying region is first treated with a liquid fumigant. A split-metal casing is driven below grade by rotary-driven equipment. The casing is filled with an epoxy-aggregate for stabilization and extra strength. The filler may also contain an approved preservative additive that migrates to the outside surfaces of the pole under a time-delay release action.

(3) *Compound, rebars, and collar.* This method requires a 2-foot (0.6-meter) deep trench to be excavated around the pole and several 4-foot (1.2-meter) long rebars to be stapled about the pole. An inert 3 to 4 foot (0.9 to 1.2 meter) collar descends to about 2 feet (0.6 meters) below the ground line and is filled by funnel with hand or electric mixed epoxy-resin compound. Periodic tamping is needed to ensure proper compound setting. The trench is then backfilled after the compound has cured.

Section V - CROSSARMS, BRACES, AND PLATFORMS

4-19. Pole crossarms.

All facility crossarms are fully treated and are usually of Douglas fir or yellow pine. The length and cross section of an arm is determined by the brace and strength requirements. Properly installed crossarms require little maintenance. Crossarms can decay; aging can cause separations such as checks or shakes; lightning can splinter crossarms; or they may twist or bend by overload. These occurrences may necessitate replacement. All crossarm attachments should be kept tight. If preservative treatment is applied to the pole, the crossarms should also be treated. Crossarms should be inspected visually from the ground whenever a pole is inspected. If the pole inspection indicates the pole may be climbed, a closer inspection should be made.

a. Decay. Crossarm decay usually starts at pinholes and can best be detected with a probe, if warranted by visual inspection. Probe the arm enough to determine the extent of the decay.

Affordable Wire Management, Exhibit No. EX1010
Case No. IPR2024-00182
Page 42 of 201

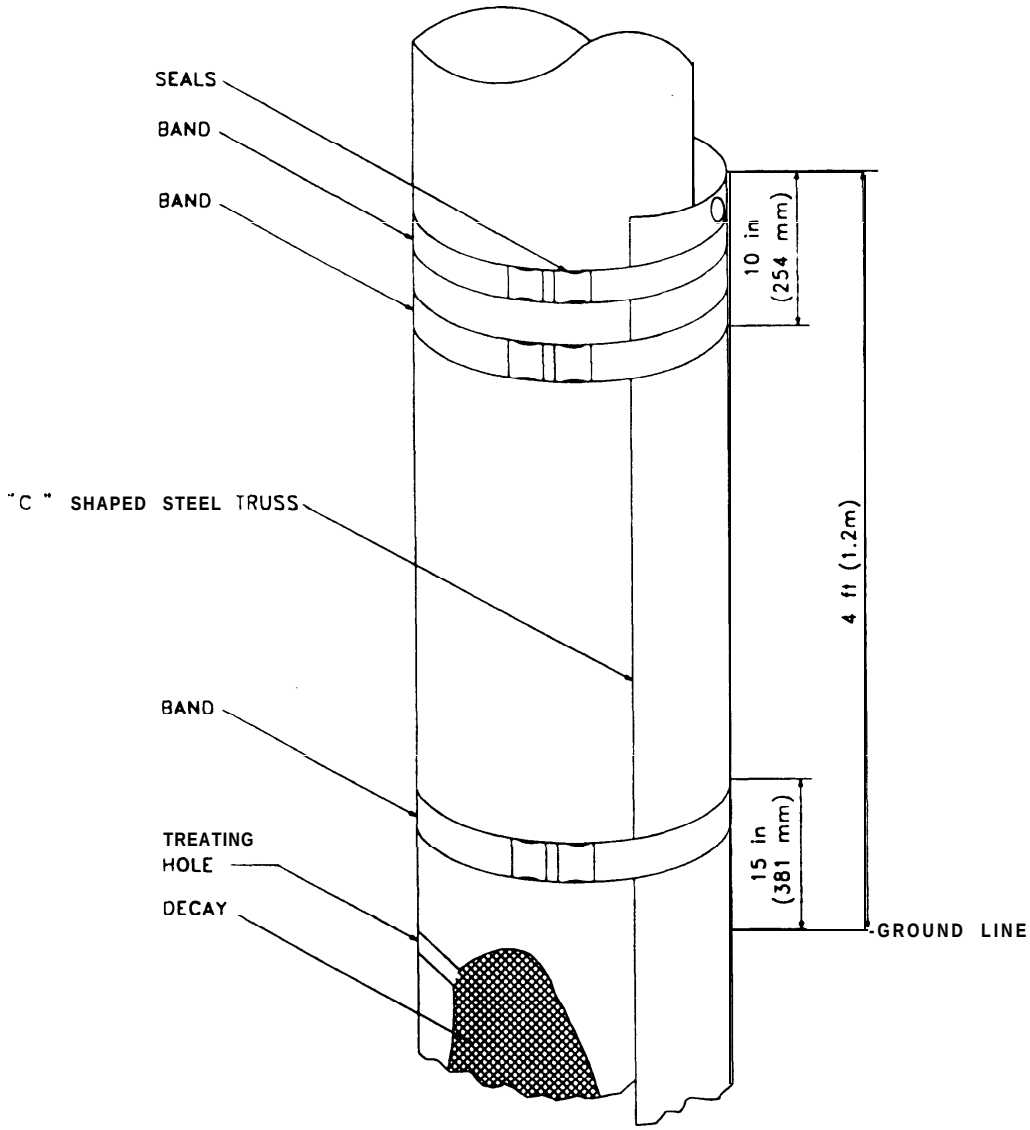

Figure 4-8. Steel reinforcing for a wood pole

b. Weathering. Crossarms may lose their strength because of cracks caused by weather separations. If cracks are near through-bolts or dead-end bolts, replace the arm because the crack may allow the bolt to pull through.

c. Twisting. Twisted arms may be caused by an unbalanced strain or insufficient guying. Where twisted arms impair the safety of the line, or create an unsightly appearance, the condition should be corrected.

4-20. Pole braces.

Braces are used to position crossarms in relation to the supporting structure. Only metal braces should be used. A crossarm brace should be maintained on the same schedule and in the same way as the crossarm it supports.

4-21. Pole platforms.

Platforms supported by one or more poles are used to mount transformers, regulators, or other heavy equipment above-ground. They are usually built with wooden stringers and flooring, or with wood flooring on steel beams. Many platforms now in use are composed of untreated timbers; these should be treated with suitable preservative to extend their useful life. When replacement is necessary, use fully treated timbers or consider installing ground-mounted equipment.

Affordable Wire Management, Exhibit No. EX1010
Case No. IPR2024-00182
Page 43 of 201

Section VI - MAINTENANCE WOOD PRESERVATION

4-22. Initial wood treatment.

For the best results, all wood used for maintenance should be fully treated as soon as practical after cutting and fabricating. Creosote and water-borne or oil-borne preservatives are all used. All of these can be used only by a certified pesticide applicator; only copper naphthenate does not require certification. Qualified applicators should meet the applicable agency requirements. The use of NRECA NQC treatment will ensure that best treatment practices are being employed, and that the treatment will produce desired results for the type of wood being treated. All personnel, either government or contractor, must be qualified for this specialized work. Engineering field support activities can provide assistance in training or obtaining qualified contractors. Factory-treated wood should always be used in the United States and elsewhere if available.

4-23. In-place wood pole treatment above ground.

Whenever wood poles, crossarms, or other pieces are cut or drilled, the freshly exposed wood should be given a preservative treatment immediately to prevent the entrance of fungi and insects to the inner wood area where treatment may not extend.

a. Treatment. An approved preservative should be used in accordance with AWPA recommended practices. It is recommended that a ready-to-use solution be purchased. Buying the proper formulation from a reliable supplier reduces the chances for error in mixing; eliminates the need for mixing equipment; establishes uniformity; and ensures that the preservative meets environmental directives. Test holes, and holes that are not to be used immediately, should be plugged at both ends with treated plugs as shown in figure 4-6.

b. Safety precautions. Treatment solutions can be irritating or harmful to skin and eyes. Full care must be exercised to prevent contact of any part of the body with spray or fumes from the solution. In addition to solvent-resistant gloves, boots, and clothing, a face shield should be worn to protect the eyes and face from any of the solution that may be splashed or blown toward the operator.

c. Treatment of pole top. Clean out all decayed wood. If heart rot is present, remove it to a depth of a foot (0.3 meters) or more. Flood the cavity with preservative paste or gel applied by trowel or spatula. Protect the top from weathering and leaching of the preservative with a cap of sheet metal or mineral-surfaced roofing felt, extending 1 inch (25 millimeters) or more down the sides, and securely fastened.

d. Treatment of exposed surfaces. Preservative solutions may be applied to exposed surfaces of wood poles and fixtures by either brush or powered equipment. Starting at the top and working down, the surface should be flooded with as much preservative as it will absorb. Special care should be taken to thoroughly flood all holes, splits, and check separations.

e. Brushing. A brush, a bucket, and a handline with snatch blocks are required for brush treatment. The brush should be as large as can be conveniently handled to minimize the number of dips. Care should be exercised to prevent splashing, spattering, or dripping the solution on nearby structures, vehicles, or pedestrians below.

f. Treatment of hollow heart. When hollow heart exists, locate the top of the damaged area and flood the cavity completely from this point. If no splits, checks, separations, or other openings from the surfaces to the cavity exist, apply the solution under pressure through the inspection hole. If other openings do exist, apply paste or gel under pressure.

g. Contact treatment. The above-ground portion of a pole is not subjected to the same conditions that promote decay at the ground line. Nevertheless, decay above-ground will develop sooner or later in all poles. In recent years, there has been increased use of spray, run-on, or brush treatments to the upper portion of poles.

(1) *Treatment* Use an approved remedial preservative. The pole surface should be dry, with the pole moisture content below 30 percent as determined with a moisture meter. The treatment should be applied in accordance with the preservative treatment manufacturer's recommendation, starting at the top of the pole. Immediately after the first treatment, a second application should be given the top 10 feet (3 meters) of the pole to ensure maximum absorption in the upper section and at points of attachments.

(2) *Safety.* Safety precautions must be carefully observed, especially when applying this treatment to poles in energized electric lines. Caution should also be used to avoid damage to freshly treated poles by grass fires.

4-24. Wood pole treatment at or below the ground line.

Groundline treatment should be provided whenever a pole is excavated during an inspection or resetting, and it has been determined the excavated pole need not be replaced. It is also required whenever a pole over 5 years old is moved. Such treatment involves excavation, cleaning of the surface, applica-

Affordable Wire Management, Exhibit No. EX1010
Case No. IPR2024-00182
Page 44 of 201

tion of preservative, wrapping of the treated area, soil sterilization, and backfilling.

a. Excavation. The excavation should be deep enough to expose the affected area and wide enough to permit safe and efficient working conditions. The trench dug for the inspection will normally be satisfactory. When there is any possibility that digging will affect the stability of the pole, temporary guys or pikes should be installed. Remove all debris from the excavation.

b. Cleaning. The removal of all soft or decayed wood, at and below the ground line, with a spade and wire brush during inspection must be followed by wire brushing to expose a clean surface of sound wood. Treatment should immediately follow the inspection.

c. Preservative application. Several types of preservative available for groundline treatment of poles are compounds or liquid solutions applied to the pole and sterilization of the soil.

(1) *Compounds.* Preservative compounds in the form of approved pastes, gels, or greases can be applied in ¼ to ½-inch (6 to 13 millimeter) layers by means of a trowel or spatula. Start at the bottom of the trench and continue upward about 6 inches (150 millimeters) above the ground line. Power equipment consisting of a pump, hose and flattened nozzle, as shown in figure 4-9, will be a good investment if a large number of poles are to be treated. After the preservative has been applied, cover the treated area with a grease-resistant material to prevent the compound from diffusing into the soil. Cellophane, polyethylene film, or treated Kraft paper may be used, but care must be taken to prevent puncture or displacement by sharp stones, shovels, or tampers during backfill. The effectiveness of the treatment is dependent on the integrity of the covering.

(2) *Liquid solutions.* Treatment per pole will usually require 2 to 3 gallons (8 to 12 liters) of approved preservative solution.

(a) Initial backfill. Refill the excavation about half-way. With the blade of the shovel or spade make a V-shaped trench around the pole down to the original depth of the excavation. (This avoids using excess preservative by containing it close to the pole.) Then pour a liberal amount of the preservative all over and around the pole surface by placing the mouth of the container against the pole at several positions about 2 feet (0.6 meters) above the ground line. Allow the liquid to run slowly over the pole and into all crevices. Let the excess accumulate in the trench. All of the pole surface should be covered by the preservative, from the bottom of the excavation to about 2 feet (0.6 meters) above the ground line.

(b) Final backfill. Complete the backfill and tamp well. Then make another narrow trench 4 or 5 inches (100 to 130 millimeters) deep around the pole and fill this with more preservative. Use any remaining backfill to cover this trench. Tamp and mound to provide required bearing strength and avoid depressions. See section IV for methods and materials for providing extra pole-bearing strength.

(c) Active decay. In poles containing active decay, a desirable addition to the above treatment is to use an approved water-soluble pesticide as a first application. This will diffuse into the wood and is effective in killing or arresting internal decay that may not be reached by the preservative. A pesticide's usefulness is of short duration, however, as it is ineffective as a preservative alone. Sprinkle about one pound (0.5 kilograms) of dry pesticide against and all around the pole surface just before applying the preservative. Most of it should be applied below the ground line and none of it should be exposed after backfilling. Precautions are necessary to avoid any danger of poisoning persons or livestock by leaving pesticide lying about. Pesticide should be bought in l-pound (0.5 kilogram) cartons and each empty carton should be disposed of in the hole before backfilling.

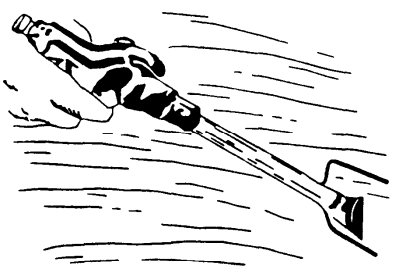

Figure 4-9. Nozzle for application of a compound preservative

Section VII - METAL POLES

4-25. Metal pole usage.

Some structures and most bolts and attachments are of metal. Steel is used where strength is the major requirement. Steel poles can be used in a rigid structure and thus eliminate the need for guys and anchors. Aluminum is used where its strength is adequate and where resistance to corrosion is important. See also chapter 3, section II.

Affordable Wire Management, Exhibit No. EX1010
Case No. IPR2024-00182
Page 45 of 201

4-26. Distribution line metal poles.

Metal poles are generally of tapered tubular construction with smooth or fluted surfaces. Attachments are made by bolting, clamping, or welding. Steel poles are subject to rusting on all surfaces. There is little that can be done to reduce rusting on the inaccessible inside surfaces, beyond requiring that new poles be treated with a rust inhibitor and sealed to keep out moisture. When rust appears on the outer surfaces, cleaning and painting are required. When corrosion at the ground line is severe, additional protection may be provided by welding a split ground sleeve over the affected area.

a. Aluminum poles. Aluminum alloy parts in contact with steel or other dissimilar metal require painting, as may the steel surfaces. Aluminum surfaces embedded in concrete ordinarily need not be painted, unless exposed to extremely corrosive conditions.

b. Self-weathering steel poles. It is important that all vegetation be kept away from these poles. Self-weathering steel, if kept moist, will corrode at a rate equal to plain carbon steel, unless protected with a high quality paint system. Salt fogs cause an accelerated corrosion because the salt residue remains on the pole. Self-weathering steel is not a completely maintenance-free material.

4-27. Transmission line metal towers.

Towers are assembled of various structural components that are bolted, riveted, or welded in place into a lattice type construction. All surfaces are more or less accessible for cleaning and painting. Most steel towers are galvanized to delay corrosion and rusting. Although galvanizing may provide good protection for many years, its effectiveness depends a great deal on the climate and area contaminants. Towers should be inspected for rusting and loose bolts. Spot painting is indicated for incidental rusting, but complete paint coverage is necessary where rusting is severe. Aluminum towers require no painting, but bolts should be checked for tightness. Tubular-type pole structures are preferred for transmission lines, because they are more aesthetically pleasing than the lattice type.

4-28. Pole-line metal hardware.

Pole-line hardware includes all metallic parts not intended to be part of the current-carrying system, except poles and other structures. This hardware is generally of galvanized steel, although some items may be aluminum alloy. The galvanized finish will resist corrosion for years under normal atmospheric conditions. Cleaning and painting may extend the useful life; but, in general, little attention is necessary except occasional checking for tightness. Because the condition of bolts passing through other items cannot be seen, replacement of a bolt is recommended if the head is rusted.

4-29. Painting of metal poles.

Preparation and painting of metal surfaces should comply with the SSPC painting manual, volume 1. Special finishes should be treated in accordance with the manufacturer's recommendations. The standard specifications for highway bridges of AASHTOP Division 11.13.2 also provides data on painting.

Section VIII - CONCRETE POLES

4-30. Concrete pole overview.

Reinforced and/or prestressed concrete poles have a projected life of 60 to 80 years and should require no attention, except for replacement when damaged. Concrete poles are preferred under conditions where the life of wood poles would be unduly shortened by decay or pests. When hauling concrete poles, they must be secured so they cannot bounce. Hard bouncing in transit will crack or chip the poles, especially when traveling over rough ground, roads, or railroad tracks. Concrete poles also require special attention if field drilling is required or there is a need for special banding or other attachment methods. Poles setting depths may in some cases be the same as wood poles, when the pole has been designed to be the equivalent of a wood pole of the same class and length. Engineering personnel should evaluate pole setting depths, guying, and foundation requirements.

4-31. Concrete pole foundations.

Other than for poles, the use of concrete in pole-line structures is limited almost entirely to the foundations. Where used for metal structures, the foundation may often be reinforced and extend above ground. Any small cracks should be filled with a high-strength grout. If substantial damage is found on existing foundations, remove loose concrete, clean surfaces, and restore the foundation to its original size. For wood and concrete pole-line structures, the backfill may be of concrete to provide better bearing in soft soils, and may or may not be visible at the surface. No maintenance is required. For distribution structures, replacement concrete should normally be 3,000 pounds per square inch (20,700 kilopascals) Class A.

Affordable Wire Management, Exhibit No. EX1010
Case No. IPR2024-00182
Page 46 of 201

Section IX - OVERHEAD OPEN WIRE CONDUCTORS

4-32. Overhead conductor construction.

Overhead electrical distribution at all voltages most often uses open wire construction, although aerial cables of various types are employed to some extent.

a. Open wire construction. The basic features of open wire construction are single conductors, insulated supports, and wide separation, with little or no conductor covering on the conductors. The air space around the conductors must be large enough to allow relative conductor movement without a flashover. Open wire construction is mounted on insulators, either as armless or crossarm construction.

(1) *Armless construction.* Armless construction consists of insulators on supporting brackets mounted directly on the pole. When possible, this construction is preferred for use on pole replacements because of its more attractive appearance and lower maintenance cost. Triangular tangent construction is preferred over vertical tangent construction, as it requires the least conductor space and is more economical. The difference between the two is shown in figure 4-l. Triangular construction is not suitable for configurations which require an overhead ground wire. It is not recommended except for the tangent and minor angle construction shown in figures 4-l and 4-2.

(2) *Crossarm construction.* Unless it conflicts with facility practice, crossarm construction should be phased out whenever possible, but may be necessary where equipment or line installations, utilizing armless construction, would result in excessive pole heights. Facility practice usually matches the local utility company's open wire construction.

b. Cables. Cables utilize conductors with covering which is sufficient to withstand the voltage at which the line is operating and, therefore, do not need insulators. Cables are discussed in section X.

4-33. Overhead conductor material.

Conductors used in open wire construction are usually copper, aluminum, or combinations of copper and steel or aluminum and steel. Specially designed connectors are required for splicing or otherwise connecting conductors of dissimilar metals.

a. Copper. Copper has high conductivity and is easily handled. Hard-drawn copper is desirable for distribution conductors because of its strength. Soldering will anneal copper and reduce a hard-drawn copper wire's tensile strength from 50,000 to 35,000 pounds per square inch (345,000 to 241,000 kilopascals). Splices and taps, therefore, should be made with connectors, clamps, or sleeves suitable for copper. Never make soldered splices. Use annealed or soft-drawn copper wire where it is necessary to bend and shape the conductor, such as for ground wires. Medium-hard-drawn copper is used for distribution, especially where wire sizes smaller than No. 2 AWG are needed.

b. Aluminum. An aluminum conductor has about 61 percent of the conductivity of copper of the same cross section but is lighter. Aluminum is relatively soft and, although low in tensile strength, is very durable. Some alloys are available with greater strength but less conductivity. Various combinations of steel and aluminum strands are available for use where both strength and good conductivity are required. Standard aluminum conductor steel-reinforced (ACSR) conductors should not be used in areas of severe corrosion. There are a variety of special aluminum alloy conductors some with special steel reinforcing, for use under conditions of corrosion, for greater strength requirements, and for self-damping to limit aeolian vibration. When replacing aluminum conductors, check to be sure the selection meets the requirements of the original design. Connectors used will conform to section XI.

c. Copper-clad steel. High-strength steel may be covered with copper to yield a conductor having 30 to 40 percent of the conductivity of pure copper. It is corrosion resistant and may be stranded in various combinations with copper to give various combinations of strength and conductivity. Its chief application is for use as an overhead ground wire.

4-34. Overhead conductor covering.

No covering is provided on open-wire primary circuit conductors. For open-wire secondary circuit conductors, a triple-braid weatherproof covering of impregnated cotton or layers of neoprene or polyethylene covering are provided. This covering is not sufficient to withstand the operating voltage and conductors must be mounted on secondary rack insulators. The covering is not to be considered as insulation, although when dry it will help prevent breakdowns at lower voltages if conductors swing together. The wires should always be treated as though they are bare. Because of both space requirements and unattractive appearance, this type of installation is being phased out in favor of insulated cable.

4-35. Overhead conductor sag.

Sag is the maximum droop of a wire in a given span, measured vertically from a straight line between the' two points of support. The amount of sag depends on the characteristics of the conductor, the temperature, and the tension. A properly sagged

Affordable Wire Management, Exhibit No. EX1010
Case No. IPR2024-00182
Page 47 of 201

line will not be too tight in the cold of winter or too slack in summer heat. If the sag is insufficient, the tension will be too great and the conductor will stretch and might break. If the sag is too great, vertical clearances may be compromised and conductors may then blow together. Before adjusting the sag, check for a broken guy or pole, a tree limb lying on the wires, or twisted or leaning poles. All wires in any span should be sagged the same or with greater sag in the lower wires than in any above. This is important in maintaining midspan clearances.

a. Sag tables. Tables providing initial tension sag for most open wire conductors may be obtained from your local utility company. Line conductor manufacturers may also provide this data. TM 5-811-l/AFJMAN 32-1080 provides information on sag determination. As-built drawings, if available, may provide the initial tension sag at the time of construction. Resagging requirements should allow for the normal increase in sag caused by the unloaded weight of the conductors.

b. Measuring existing sag. Measuring existing sag can be done by following these instructions. Note that in both cases the line of sight is parallel to a line joining points of wire support. This may not be horizontal.

(1) *Line conductors. See* figure 4-10 for primary and secondary line conductor sag measurements.

(a) Estimate approximate sag in section and hold marker on each pole.

(b) Adjust marker equally on each support until A, B, and C shown in figure 4-10 are in line.

(c) Measure distances D and E shown in figure 4-10. If markers were adjusted properly, D and E will be the same, which is the amount of existing sag.

(2) *Service drop conductors. See* figure 4-11 for secondary service-drop procedures.

(a) Estimate approximate sag in service-drop conductors and hold marker on pole and building.

(b) Adjust markers equally at pole and building until A, B, and C are in line.

(c) Measure distances D and E. These distances should be equal. This is the amount of existing sag.

c. Clearances. Minimum clearances that should be maintained between conductors and other objects are contained in the NESC.

4-36. Overhead conductor damage.

Conductors can be damaged in many ways, and what appears initially to be superficial damage may in time cause a failure. Carelessness in installation may kink, nick, abrade, or overstress the conductor. Aeolian vibration, galloping, sway oscillation, unbalanced loading, lightning discharges, and short-circuit effects can be damaging to conductors in service. Poor connections cannot only cause damage, but are also possible sources of radio or television interference. An infrared scanning system is recommended over visual inspection. Equipment can be operated from the air or from the ground using aircraft or aerial equipment or vehicular-mounted or hand-held devices.

a. Damage signs. The following signs indicate that the conductor is probably being damaged.

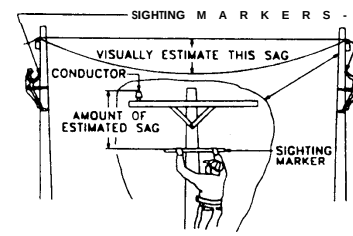

a. Showing position of sighting markers.

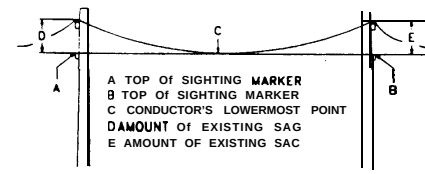

b. Showing how meosurement is mode.

Figure 4–10. Measuring sag on line conductors

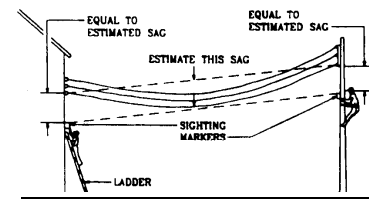

a. Adjusting the markers.

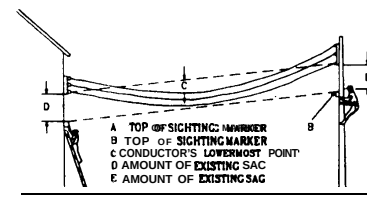

b. Showing how measurement is made.

Figure 4-11. Measuring sag on service drop conductors

Affordable Wire Management, Exhibit No. EX1010
Case No. IPR2024-00182
Page 48 of 201

(1) *Abrasion.* Abrasion damage is a chafing, impact wear that accompanies relative movement between a loose tie, or other conductor hardware, and the conductor or armor rods. Abrasion is a surface damage and can be identified by black deposits on the conductor or tie wire.

(2) Fatigue. Prolonged periods of vibration will cause fatigue failure.

b. Line interference sources. Where radio or television interference complaints occur, check for possible sources of trouble covered in chapter 16, section II.

4-37. Overhead conductor repairs.

Installation of repair sleeves, preformed line splices, armor rods, or line guards; or replacing broken tie wire, may be the appropriate methods of maintaining conductivity and retarding additional damage. Preformed spiral vibration dampers should prevent conductor fatigue and scoring of insulators. Line replacement is indicated where more than two repair sleeves are required to cover the length of the damaged conductor.

Section X - OVERHEAD CABLE

4-38. Overhead cable construction.

The conductors of a cable, in contrast to open wire, are individually insulated so that they may be closely spaced or tightly bundled together. Except for some self-supporting cables (which are seldom used), all overhead cables consist of a messenger, which provides support, and one or more conductors attached to it by rings, wrappings, lashings, or insulating spacers. The cable messenger is attached to the pole. In the case of secondary circuits, the messenger may also provide the neutral wire.

4-39. Overhead cable repair requirements.

Aerial cable installations should be inspected for mechanical damage due to vibration and deteriorating supports, especially at suspension systems and dead-end supports. Check to see that cable insulation is not abraded, pinched, or bent too sharply.

a. Insulation. Insulation repair is covered in chapter 5, section VI.

b. Sheath. A sheath is sometimes applied to the insulated conductors to provide extra protection from moisture, mechanical damage, or atmospheric contaminants. The sheath may be metallic armor, lead, or another protective covering. Wear at points of support and cracks from vibration are the principal causes of sheath failure, although burns and mechanical damage are often contributing factors. Sheath repairs should be made as soon as the damage is discovered. If failure has not yet occurred, temporary repairs or protection may be desirable. Such temporary expedients may include providing weather shielding, taping, or spreading single conductors. Permanent repairs should be as extensive as necessary, from patching to replacement of the damaged length.

c. Messenger. The supporting messenger is usually of stranded galvanized steel or copper-clad steel. The initial design will provide adequate strength to support the cable under the maximum loading of ice and wind, and the temporary loads involved in installation and maintenance. Wear or rusting can reduce the messenger's strength. When it reaches the minimum safe value, then a messenger replacement should be made. Under these conditions, it is probable that other parts of the cable assembly will also require replacement.

d. Lashing. Metal rings are used with metallic-sheathed cables for field-assembled aerial cable. The disadvantage of this combination is the relatively rapid wear of the sheath at point of contact with the ring. Moving the rings periodically will alleviate this. When excessive wear occurs, lashing with a spiral wrap of metallic band or tape is recommended. This is the method used for factory-assembled cables, and it can also be used for field assembly, with little or no relative movement between conductors, messenger, and band.

e. Splices and taps. When making splices and taps on aerial cables, procedures specified elsewhere in this manual for overhead open wires in section XI or underground cables in chapter 5, section VI, as appropriate, should be followed.

Section XI - CONDUCTOR CONNECTIONS

4-40. Overhead line conductor requirements.

Line conductors must be joined together with full-tension splices, if the conductors are under tension. Bolted connectors can be used to join electric conductors at locations where the conductors are slack, such as between conductor dead-ends. Connectors should meet the requirements of ANSI C119.4 for aluminum lines or for connecting copper to aluminum lines. Only compression connectors will be installed on aluminum line conductors. Do not use screw clamps, split bolt connectors, or bolted connectors.

Affordable Wire Management, Exhibit No. EX1010
Case No. IPR2024-00182
Page 49 of 201

441. Overhead line conductor splices.

A splice is generally considered to be an end-to-end connection. It must be able to transmit the maximum electrical load without undue heating and should usually develop the full mechanical strength of the conductors. Because of different characteristics of copper and aluminum, connectors must be suitable for the specific materials of the conductors joined. Materials such as fluxes, inhibitors, and compounds should be of a type which will not adversely affect the conductors. See chapter 1, section III. Compression and automatic-type splices correctly join together conductors in tension and provide the strength and electrical conductivity required. Twist sleeve splices are no longer in use because they do not develop the strength of other connectors. Implosive-compression connectors are not recommended for use by facility personnel, as special training is required. Conductor connections should be kept to a minimum. Keep splices in transmission-line conductors at least 50 feet (15 meters) or more from dead-end connections. Do not make splices in lines crossing over railroads, rivers, canals, or freeways. Also try to avoid splices in spans crossing over communications circuits or electric transmission and distribution lines.

a. Compression sleeve splice. Compression sleeves provide full strength and conductivity and will produce the most trouble-free connection, but they cannot be salvaged. A compression connector may be used only for the size of conductor for which it is made. Neither the connector nor the conductor should be altered to fit a conductor for which the connector was not designed. Several types of compression sleeve splices are available:

(1) *Single sleeve.* This splice is used for copper, copper-clad, aluminum, and aluminum-clad conductors, as shown in figure 4-12. A sealant port and set screw or plug is provided for injecting filler paste before compressing the splicing sleeve with a hydraulically-powered compression tool. Some connectors may have a factory-applied sealant.

(2) *Double-sleeue.* This splice is used for ACSR conductors. In this type a steel sleeve is used to join the steel support stand, and an aluminum sleeve is used to join the aluminum conductors, as shown in figure 4-13. Both sleeves need to be compressed, and the aluminum strands need to be cut back from the steel core.

(3) *Single-sleeve and internal gripping unit.* This splice is used for ACSR. A gripping unit provides continuity for the steel core of the conductors being spliced and provides the required strength for the tension applied. The splice requires only one die in the compression tool, as the gripping unit replaces the double-sleeve's inner sleeve compressed on the steel core.

Figure 4-12. Single-sleeve compression splice (Courtesy of BURNDY Electrical)

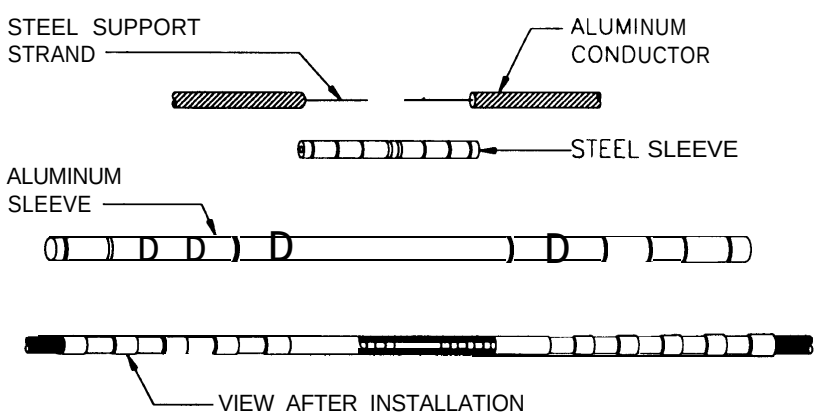

Figure 4-13. Double-sleeve compression splice (Courtesy of BURNDY Electrical)

Affordable Wire Management, Exhibit No. EX1010
Case No. IPR2024-00182
Page 50 of 201

(4) *Secondary and service cables.* Secondary and service cables can be spliced with bare or insulated compression connectors in a similar manner.

b. Automatic tension splice. Automatic tension or line splices with their single-bore sleeve as shown in figure 4-14 can only be used in any span where the wires are continually in tension. To install, force the gripping teeth of the splice jaws onto the conductor by imposing several severe jerks on the conductor or by pulling on the conductors to obtain a tension exceeding 15 percent of the rated breaking strength of the conductor. If an attempt is made to withdraw the conductor, the splice jaws will clamp down on the conductor because of a taper in the bore of the sleeve and on the jaws. The tension causes a wedging action which increases with the pull applied on the conductor. A loss of tension could cause the jaws to release their grip and allow the conductor to drop out. This type of splice is used where service must be restored quickly and is especially suited for live-line splicing.

(1) *Care.* Automatic line splices must be clean, as any contaminants will impair the proper operation of the internal jaws. Splices that have lost their original protective wrapping should be carefully inspected for any dirt. During installation and until the conductor reaches its final installed tension, automatic line splices should not be dragged through any element that could cause soiling. Any splice with a deformed or dented barrel will interfere with the proper seating of the internal jaws and should not be used.

(2) *Unsuitable Locations.* Splices should not be installed within 12 inches (300 millimeters) of a tie wire or armor rod. Splices cannot be used in taps and jumpers which have no tension, on conductors of dissimilar metals, or where there is severe vibration.

c. Clamp splices. Bolted-type connectors as shown in figure 4-15 are not recommended for wires under tension. Most clamps are designed primarily for conductivity and may not provide the required strength unless two or more are used.

d. Wires of different sizes. When the conductor size changes at a pole, special construction is usually necessary for conductor attachment. Some automatic line splices are available for use where this size difference is not great; but pins, insulators, and the line ties must be strong enough to hold the difference in tension between the two conductors. Under the worst loading conditions, when this tension difference exceeds 500 pounds (225 kilograms), automatic line splices are not recommended.

4-42. Overhead line connections.

Tap, jump, loop and secondary dead-end connections are generally considered to be tee connections. The connection must be able to transmit the required load current and have sufficient mechanical strength to support the connection and the connected conductors. In general, the connection should be suitable for installation without having to be joined to the main tension line conductor. Connectors are available in a wide range of sizes for connecting copper to copper, aluminum to aluminum, and copper to aluminum. It is essential that the proper size and type of connector be used. For tapping conductors over No. 2/0 AWG in size, a stirrup should be used on each conductor, with a hot line clamp, to avoid "burndown" of the feederline in the event of a heavy fault or "heated up" tap connector.

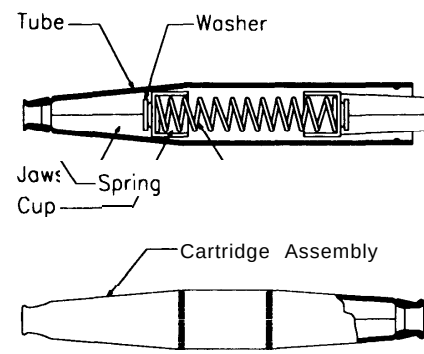

Figure 4-14. Automatic tension splice

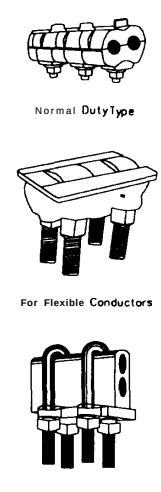

Figure 4-15. Clamp connectors (Courtesy of BURNDY Electrical)

Affordable Wire Management, Exhibit No. EX1010
Case No. IPR2024-00182
Page 51 of 201

a. Split-bolt connectors. Split-bolt connectors (bugs) are used extensively on lower voltage circuits, utilizing No. 2 AWG or smaller copper conductors, and are also available in larger sizes. Where vibration or twisting occurs, the contact pressure of a split-bolt connector will relax and may cause arcing, resulting in a burned-down conductor. Spacing two connectors about 6 inches (150 millimeters) apart will reduce this hazard. Never reuse a split-bolt connector, as it has probably been damaged in removal. Any bending or forming of the conductors should be made before final tightening of the connector. Never use split-bolt or similar type of connectors for medium-voltage splices under tension.

b. Bolted connectors. Bolted connectors are of various sizes and types, using one or more straight or U bolts to provide the contact pressure. The conductors may make contact with each other or they may be separated by spacers on the body of the clamp. Any bending or forming of the conductors should be completed before the final tightening of the connector.

c. Compression tap connectors. Compression-type tap connectors are available in such forms as T, L, and parallel. To fit over the main conductor without having to cut it, the connector has a U-shaped opening. This connection is not as strong as the full round splice connection, but if properly applied it is superior to any bolted connection. The connector is not reusable, and removal requires cutting the main conductor. If the tap is no longer needed, the tap wire may be cut off and the connector left on the main conductor.

d. Hot line clamps. Hot line clamps are used for either temporary or permanent connections in places where it is necessary or convenient to use hot sticks, and where the connection must be occasionally opened. Hot line clamps are prone to two types of trouble:

(1) Burning of the main conductor at the contact due to looseness and high resistance;

(2) Difficulty of removal due to freezing of the bolt in the body. The clamp should be located where vibration and flexing of the tap wire will be a minimum. To prevent burning from damaging and possibly dropping the main conductor, a hot line clamp should not be attached directly to the main conductor except in a nontension loop. The best method is to attach a suitable stirrup, either clamp or compression type, and apply the hot line clamp to the stirrup. In this way, any burning at contact or arcing during removal will burn the stirrup and not damage the main conductor. Hot line clamps can be applied over armor, if the contact between conductor and armor is thoroughly cleaned first. The problem of freezing threads is a matter of design, and the more modern hot line clamps are much less likely to have this trouble. Any hot line clamp that is not in good condition should be discarded.

e. Internally-fired taps. Internally-fired taps are used for a tee connection on transmission and distribution conductors of both copper and aluminum. The tap housing is made of a suitable alloy, tapered at the ends where the conductors enter. The application tool as shown in figure 4-16 contains a high-strength steel powder chamber that is loaded with a fast-burning propellant charge contained in a polyethylene cartridge. A simple hammer blow detonates the cartridge. Igniting the charge creates instantaneous high pressure in the chamber. This pressure drives cylindrical sets of wedge-shaped serrated aluminum jaws (into which the conductor ends have been inserted) at high velocity into the tapered ends of the housing. The jaws clamp and lock the conductor ends in position, providing the required holding strength and establishing a low-resistant current path across the housing. If correctly operated, a locking tab will verify the wedge

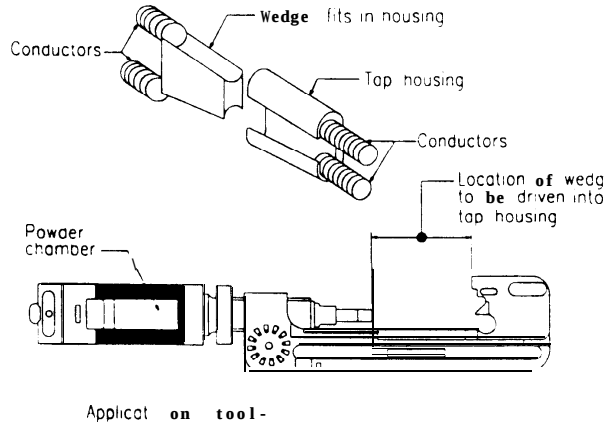

Figure 4-l 6. Internally-fired tap components

Affordable Wire Management, Exhibit No. EX1010
Case No. IPR2024-00182
Page 52 of 201

position is correct and will remain in position even under the most severe conditions. Use of a takeoff clip permits the tap to be removed as easily as it was installed, using the same application tool.

4-43. Overhead line armor rods.

Armor rods are required for all aluminum and ACSR cable supports except at dead ends. The rods provide threefold protection by preventing the breaking of strands due to vibration; the wearing of the conductor at its point of support; and the burning of the conductor from flashover or tap contact. Armor rods are sometimes used as a repair for broken or damaged strands. If damaged armor rods are found, replacement is recommended. Armor rods should be installed in accordance with manufacturer's instructions.

Section XII - POLE-LINE INSULATORS

4-44. Pole-line insulator related material.

Insulator use, inspection, repair, and cleaning are discussed in chapter 3, section IV, which also applies to pole-line insulators. Apparatus insulators used on substation equipment and to support buses are much heavier and more expensive than pole-line insulators. It may be more economical to replace pole-line insulators than to repair them. In many instances it is possible to wash energized pole-line insulators, as covered in section XV

4-45. Insulator operating performance.

Operating performance of aerial lines is dependent upon the quality of the line insulators. Pole-line inspection should reveal damage, even if visible corona or recognizable interference voltages have not already indicated some impairment.

a. Damaging conditions. Most pole-line insulator damage results from gun shots, lightning or contamination flashovers, and wind damage.

b. Understanding insulator provisions. Insulators provide mechanical and electrical performance values to meet requirements imposed by different applications. Mechanical performance dictates to a certain extent the type of insulator most suitable for the line being supported. Electrical performance requirements are mainly based on operating voltage and the degree to which area conditions affect the electrical performance.

4-46. Types of pole-line insulators.

Insulators used are the pin, post, and suspension type for primary lines; the spool, pin, and knob type for secondary lines; and the guy strain type for guys, as covered in section XIII. Figure 4-17 shows the different types normally used on facilities covered by this manual.

a. Pin insulators. This insulator gets its name from the fact it is supported on a pin. The pin is usually attached to a wood crossarm. Steel pins should always be used, as wood pins deteriorate rapidly from the leakage currents through the insulator. Where crossarm construction is being phased out, pin insulators are used less often on primary lines. They are available for secondary lines, but should only be used if the secondary line is mounted on crossarm construction. Conductors are fastened to pin insulators with wire ties.

b. Post insulators. Armless construction using post insulators is the preferable construction if practicable, as it is clean-looking and requires less space. Post insulators can also be used on crossarm construction. Line posts are stronger, more resistant to vandalism, and inherently more radio-interference free than pin insulators. Post insulators can be provided with clamp tops or tie tops. Tie tops cannot be used for angles of more than 15 degrees. For some mountings and loadings they can only be used for angles up to 2 degrees. Tie tops are less expensive, but clamp tops eliminate both tie wire material and labor costs, resulting in an easier installation.

c. Suspension insulators. Suspension insulators (dead-end bells) are used for primary lines, where pin or post insulators do not provide the required strength. They may also be referred to as strain insulators where lines are dead-ended at corners, where there are sharp curves or extra long spans, and at other places where a pull must be carried as well as insulation provided.

d. Spool insulators. Spool insulators are used on secondary racks or clevises, as required to support secondary cables, and require tie wires. Knob insulators should not be used, as they are not covered by an ANSI insulator standard and are manufactured for indoor installation.

e. Tie wires. Prefabricated ties are recommended for maintenance installation. They can be installed on energized line circuits, with proper protective equipment placed to insulate the tie from grounded equipment or other energized phase conductors. Hot line tools or rubber gloves and rubber sleeves are used, depending on the voltage of the conductor. Tie wire sizes should be in accordance with table 4-3. The wires should hold the line conductor tightly at all times to prevent chafing at the point of support. Never reuse a tie wire, as the kinks from the first use will prevent a satisfactory tie. A bare tie wire, of the same metal, should always be used on a bare

Affordable Wire Management, Exhibit No. EX1010
Case No. IPR2024-00182
Page 53 of 201

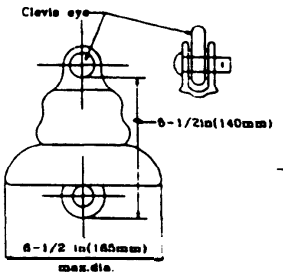

SUSPENSION, CLASS 52 -2

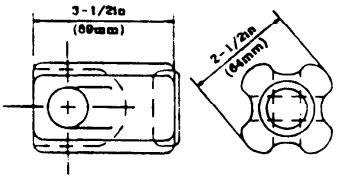

GUY STRAIN, CLASS 54-1

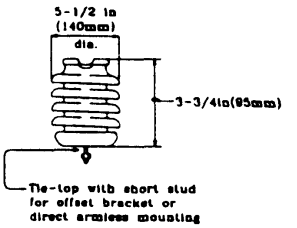

LINE POST, CLASS 57-18

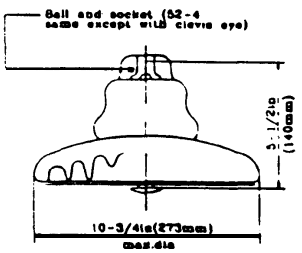

SUSPENSION. CLASS 52-3

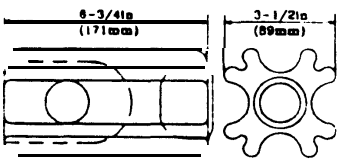

GUY STRAIN. CLASS 54-4

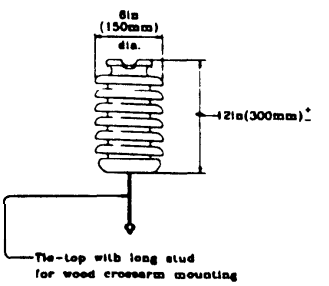

LINE POST, CLASS 57-2L

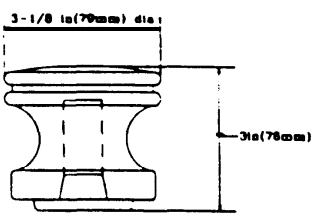

SPOOL CLASS 53-2

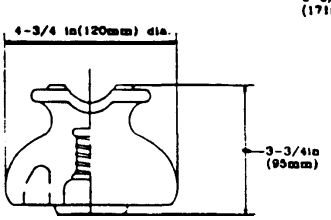

PIN, CLASS 55-3

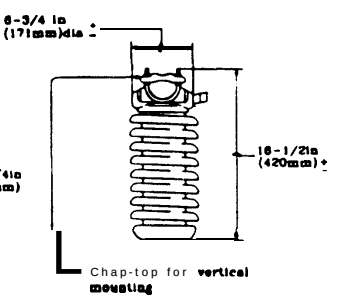

LINE POST, CLASS 57-13

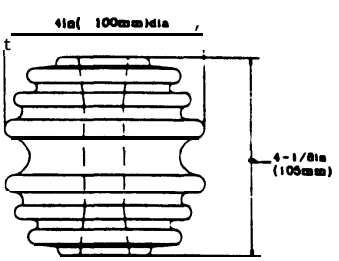

SPOOL CLASS 53-5

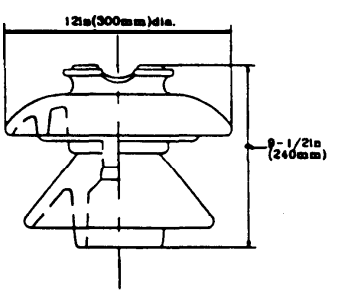

PIN, CLASS 56-4

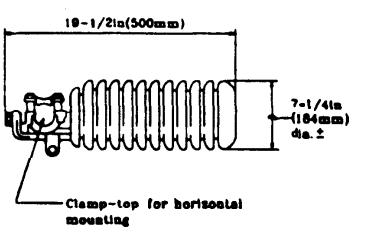

LINE POST
SIMILAR TO CLASS 57-14

Figure 4-l 7. Types of insulators commonly installed

Affordable Wire Management, Exhibit No. EX1010
Case No. IPR2024-00182
Page 54 of 201

Table 4-3. Tie wire requirements

Conductor	Tie wire
Copper AWG.	Soft-drawn copper AWG
6	8
4 and 2	6
1 through 3/0	4
4/0 and larger	2
AAC,AAAC,orACSRAWG	AWG
Any size.	6 AAC or 4 AAC

conductor and likewise, a covered tie wire should always be used on a covered conductor. A loose or improper tie wire may be a source of radio interference.

4-47. Pole line insulator class requirements.

Insulator ratings are not specified by voltage but by ANSI C29 insulator classes. Manufacturers may indicate nominal line-voltage values but the NESC does not recognize voltage levels. Insulation level requirements are given in the NESC and do not relate directly to insulator classes. An understanding of the relations between insulator classes and insulation level requirements is helpful in understanding why each facility should have a recognized insulation level (class) for its various on-site distribution levels if they vary from requirements given in table 4-4.

a. Code requirements. The NESC spells out dry flashover requirements up to 230 kV These should be considered a minimum, even though a qualified engineering study could permit lower insulation levels. The NESC requires the use of insulators with higher dry flashover levels where severe lightning, high atmospheric contamination, or other unfavorable conditions exist. The NESC preparers recognized that dry flashover may not be the best test, but it has been used for many years with reasonable success. The desirability of using wet flashover as a basis has been recognized, but no consensus agreement has been reached.

Table 4-4. Relation of the NESC voltage levels to ANSI C29 class ratings

NESC (ANSI C2) requirement		ANSI C29 provision				
Nominal voltage (between phases)(kV)	Rated dry flashover voltage of insulators (kV)[1]	Rated dry flashover voltage of insulators (kV)	Area designation[2]	No. of insulators	ANSI class	Facility voltage level (kV)
		ANSI C29.2—Suspension Insulators				
6.9	39	60	A	1	52–1	Up to 5
		115	B	2	52–1[2]	
13.2	55	130	A	2	52–2	6 to 15
		155	B	2	52¾	
23.0	75	155	A	2	52¾	16 to 25
		215	B	3	52¾	
34.5	100	215	A	3	52¾	26 to 35
		270	B	4	52¾	
		ANSI C29.5 and C29.6—Pin Insulators				
6.9	39	55–3	A	1	55	Up to 5
		55–5	B	1	80	
13.2	55	55–5	A	1	80	6 to 15
		56–3	B	1	125	
23.0	75	56–3	A	1	125	16 to 25
		56–4	B	1	140	
34.5	100	56–4	A	1	140	26 to 35
		56–5	B	1	175	
		ANSI C29.7—Line Post Insulators				
6.9	39	57–1	A	1	80	Up to 5
		57–1	B	1	80	
13.2	55	57–1	A	1	80	6 to 15
		57–2	B	1	110	
23.0	75	57–2	A	1	110	16 to 25
		57–3	B	1	125	
34.5	100	57–3	A	1	125	26 to 35
		57–4	B	1	150	

[1] The rated dry flashover voltage is based on manufacturer's tests where more than one insulator is required.
[2] Use the A value in areas where the atmosphere is dry (desert) or where fog occurs only to a limited degree and there is not more than moderate industry contamination. Use the B value in areas where medium-to-heavy fog is common occurrence and there is medium industrial contamination along a salt-water coast line.

Affordable Wire Management, Exhibit No. EX1010
Case No. IPR2024-00182
Page 55 of 201

b. Altitude derating. As altitude increases the insulation value of air decreases, so that an insulator at a high elevation will flashover at a lower voltage than the same insulator at sea level. The low frequency dry flashover value of an insulator at 7,000 feet (2,100 meters) is about 80 percent of the low frequency dry flashover at 1,000 feet (300 meters).

c. Cleaning. Insulators in severely contaminated atmospheres may require frequent cleaning. Pollutant buildup increases operating stresses and increasing the flashover level will help compensate for this. Such an increase does not eliminate the need for cleaning insulators.

Section XIII - GUYS

4-48. Guy functional requirements.

Guys are used whenever the line wires would tend to pull the pole out of its normal position because of unbalanced forces from dead-ended conductors, changing conductor sizes or material, or other conditions. The vertical forces of the line are resisted by the pole, while the guy counteracts the unbalanced horizontal components.

a. Inadequate guying. Inadequately guyed lines soon begin to sag, causing an unsightly installation, degrading line reliability, and possibly creating an unsafe supporting structure because the pole is overloaded.

b. Guy components. Guy installations usually include the guy wire (strand), the anchor assembly, attachments to poles and anchor rods from the guy strand, strain insulators, and sometimes guy markers.

c. Replacements or modifications. When any guy component becomes weakened due to corrosion or physical damage, that component should be replaced. Retension guy wires where any slack is observed. If a change is made in the number, size, or location of conductors, guys should be added or changed as required by the changed conditions. Guys should be checked whenever poles are checked.

4-49. Guy strand.

The major component in each guy installation is the guy strand or wire, whose rated breaking strength determines the requirements for all other components.

a. Wire types. Wire of either three or seven strands is commonly used. Each strand consists of a steel core having a protective coating of zinc or aluminum. Zinc coatings are available in standard ASTM coating weights, and a Class A coating weight is half of a Class B coating weight and a third of a Class C coating weight. The coating weight used is dependent upon atmospheric corrosion. Class A is used in dry or desert areas with little industrial contamination; Class C (or aluminum) is used in salt-laden or foggy areas or heavily contaminated locations; and Class B is used elsewhere. Copper-covered steel wire should be used only where specifically justified to meet an environmental requirement.

b. Wire replacement. Rated breaking strength used for replacement guys should not be less than 6,000 pounds (2,700 kilograms). Replacement guying should always be engineered. Because of corrosion or damage, the strength of existing guys on a pole may be less than for a new guy stranding of the same initially designed diameter. Existing guy strands may be overloaded, if it is assumed they have the same strength as new strands. Guy strands should not exceed the steepness and flatness limits of figure 4-18. If these limits cannot be maintained, then pole embedding may be necessary.

4-50. Anchor assemblies.

An anchor assembly with a rod and patent anchor buried in the ground is normally used to hold down the guy strand. Above-ground objects, such as trees or buildings, have sometimes been used for temporary guying, but only exceptional circumstances should justify any such interim use. Once installed, assemblies seldom require any maintenance except for inspection of the anchor rod for corrosion near the ground line, where repair should be provided as needed. In soils with a resistivity less than 30,000 ohm-centimeters and where corrosion of underground ferrous structures is a problem, galvanized steel anchors and guys should not be connected to copper grounding systems because severe corrosion may result. Instead, strain insulators need to be installed in the guy wire. When replacing an assem

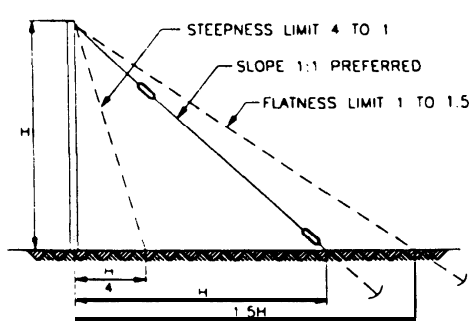

Figure 4-18. Steepness and flatness limits for guy strands

Affordable Wire Management, Exhibit No. EX1010
Case No. IPR2024-00182
Page 56 of 201

bly, be sure to provide adequate temporary support for the pole and to maintain clearances from energized lines. The anchor rod must be in line with the anchor guy. Try to attach only one guy to the eye of an anchor rod, but never more than two. If two guys are attached, the direction of the anchor rod must be the same as the resultant angle of the two guy strand angles.

a. Patent anchors. Patent or manufactured anchors, as shown in figure 4-19, are most often used because they are the easiest, quickest, and least expensive to install. If properly installed, there is no maintenance required as long as the anchor holds. If the anchor does not hold, then replacement, reduction of load, or positioning of one or more additional anchors that do not disturb the original installation (including the cone of earth above the anchor) will be required. Screw anchors in swampy soil may sometimes be screwed to a greater depth by means of an extension rod to restore holding power. The hole drilled for cone or expansion anchors should be no larger than necessary and the backfill firmly tamped.

b. Other anchors. Where patent anchors are not feasible, more expensive guying methods must be used.

(1) *Log anchors.* If the soil has little holding ability, the greatly increased bearing of a log anchor, sometimes called a log deadman, may be required. The log anchor is usually cut from a sound section of an old pole and should be thoroughly treated before installation. In the past, many deadmen consisted of logs or untreated pole sections and tended to deteriorate rather rapidly. When this happens, the anchor rod will pull free and a new anchor needs to be installed. Because of the extra labor required to install a log anchor, the replacement should be a patent anchor if soil conditions permit. Figure 4-20 shows the installation features of a log anchor.

(2) *Push brace.* On infrequent occasions, an anchor and guy may be impossible to install. In such cases, the proper support for the pole can be provided by a push brace applied to the pole at the inside of the corner. The push brace should be a pole the same length as the line pole being braced, and should support the line pole as near to its top as possible. Since the brace produces an uplift on the line pole, the line pole must be held down with cross cribbing bolted to its base. Details are shown in figure 4-21. Poles provided with push braces should be periodically inspected for uplift. If evidence indicates that this is happening, the pole may be held down by the installation of side anchors as shown in figure 4-22.

(3) *Self-supporting poles.* Where obstructions make guying difficult, self-supporting poles with hog guying, as shown in figure 4-23, can be used.

4-51. Guy attachments.

The guy strand is fastened to the pole hardware and the anchor rod with clips, clamps, or other devices. The guy is tightened by means of a chain jack and nonslip wire grips called come-alongs. The guy should be tightened until the pole leans slightly toward the anchor. Then the guy strand is firmly fastened and the chain jack released. When handling a guy strand, do not nick or scrape the surface; this breaks the protective coating and lets corrosion start. Guy guards should be installed in accordance with departmental safety requirements.

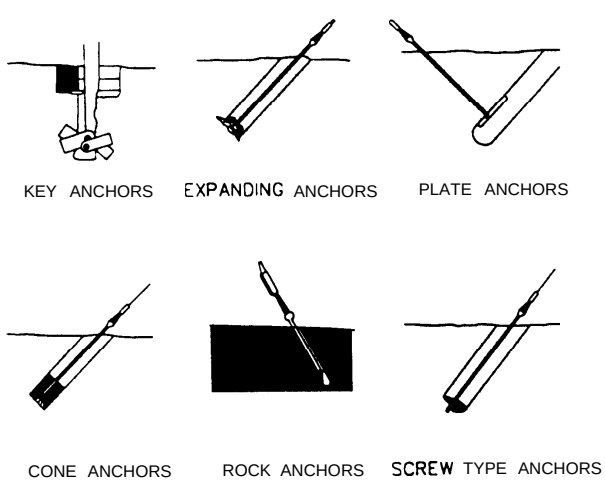

Figure 4-19. Types of patent anchors

Affordable Wire Management, Exhibit No. EX1010
Case No. IPR2024-00182
Page 57 of 201

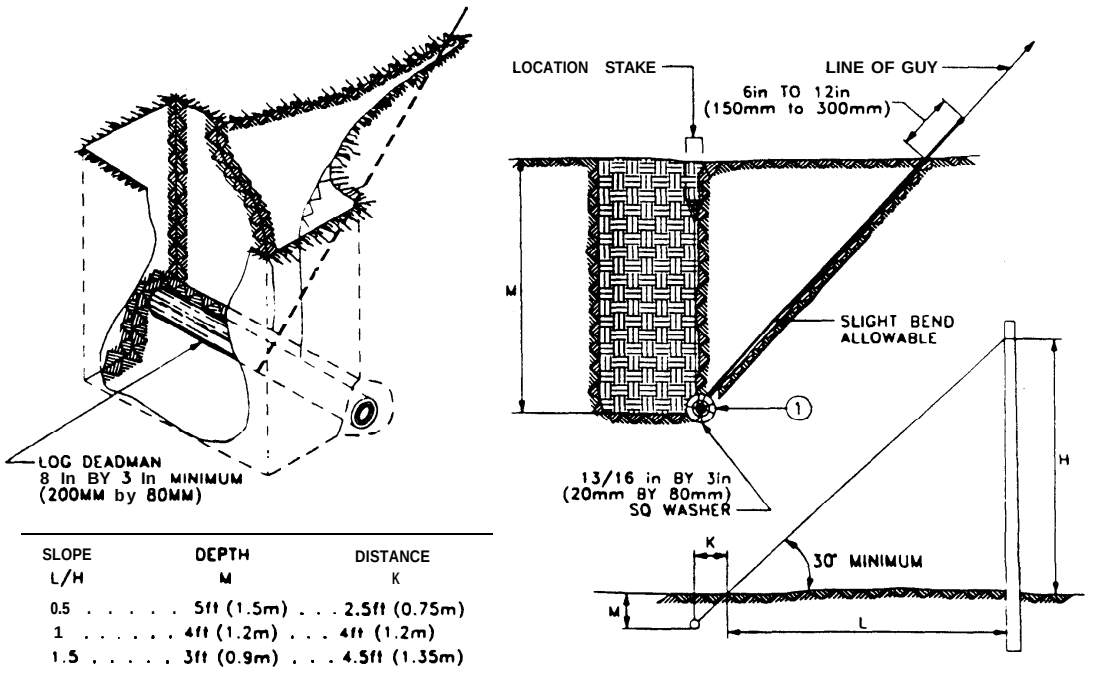

SLOPE L/H	DEPTH M	DISTANCE K
0.5	5ft (1.5m)	2.5ft (0.75m)
1	4ft (1.2m)	4ft (1.2m)
1.5	3ft (0.9m)	4.5ft (1.35m)

Figure 4-20. Log anchor

a. Guy clamps. Use three-bolt guy clamps which are made of steel with steel or malleable riders. All parts are galvanized to prevent rusting. The number of clamps used depends upon the breaking strength of the guy strand as shown in table 4-5. A two-bolt clamp is not recommended for use because of its limited strength. Little maintenance of the bolts will be required, if guy clamps are properly installed and the bolts are retightened after the load is applied. A loose guy can easily be tightened by repulling and clamping. The clamping surfaces should be free of oil or grease, but need not be cleaned to the extent necessary for electrical connectors. The end of the wire extending beyond the clamp is covered on the end with a guy clip or several wraps of wire.

b. Preformed grips. A preformed grip consists of a number of wires of suitable material and size, which are prefabricated to loop through a thimble or insulator and to wrap around the guy strand. The more the load is increased, the tighter the grip is drawn. Grips can be applied without tools and can be retensioned up to three times within 3 months after installation. Otherwise, they should not be considered salvageable for reuse. Due to the length of preformed grips, it may be necessary to use clamps where space is limited.

c. Serves. Instead of clamping, a method called serving may be used. This utilizes the guy strand end (on small-size or low-strength guy strands) to provide the necessary attachment to pole eyebolts, guy insulators, or ground rod thimbles. This method should not be used as a substitute for guy clamps or grips.

4-52. Guy strain insulators.

The NESC requires that ungrounded guys attached to supporting structures carrying open-supply conductors of more than 300 volts, or guys that are exposed to such conductors, be insulated. Otherwise, the guys must be effectively grounded. In guys that are effectively grounded, adequate electrical clearances and safe working space for the lineman may be maintained by installing insulators, if this is the facility's policy. A guy insulator installation must have a rated dry flashover voltage at least double, and a rated wet flashover voltage at least as high as, the nominal line voltage between conductors of the guyed circuit. A guy insulator installation may consist of one or more individual guy strain insulators. Linemen should be trained to recognize a grounded guy. When work is to be done on a grounded guy assembly, electrical continuity will need to be maintained and such guys should be treated as being an ungrounded device. Install proper protective equipment on adjacent grounded guys while the lineman is working on or near energized conductors. Ungrounded guys are insulated with porcelain, wood, fiberglass, or other materials of suitable mechanical and electrical properties.

Affordable Wire Management, Exhibit No. EX1010
Case No. IPR2024-00182
Page 58 of 201

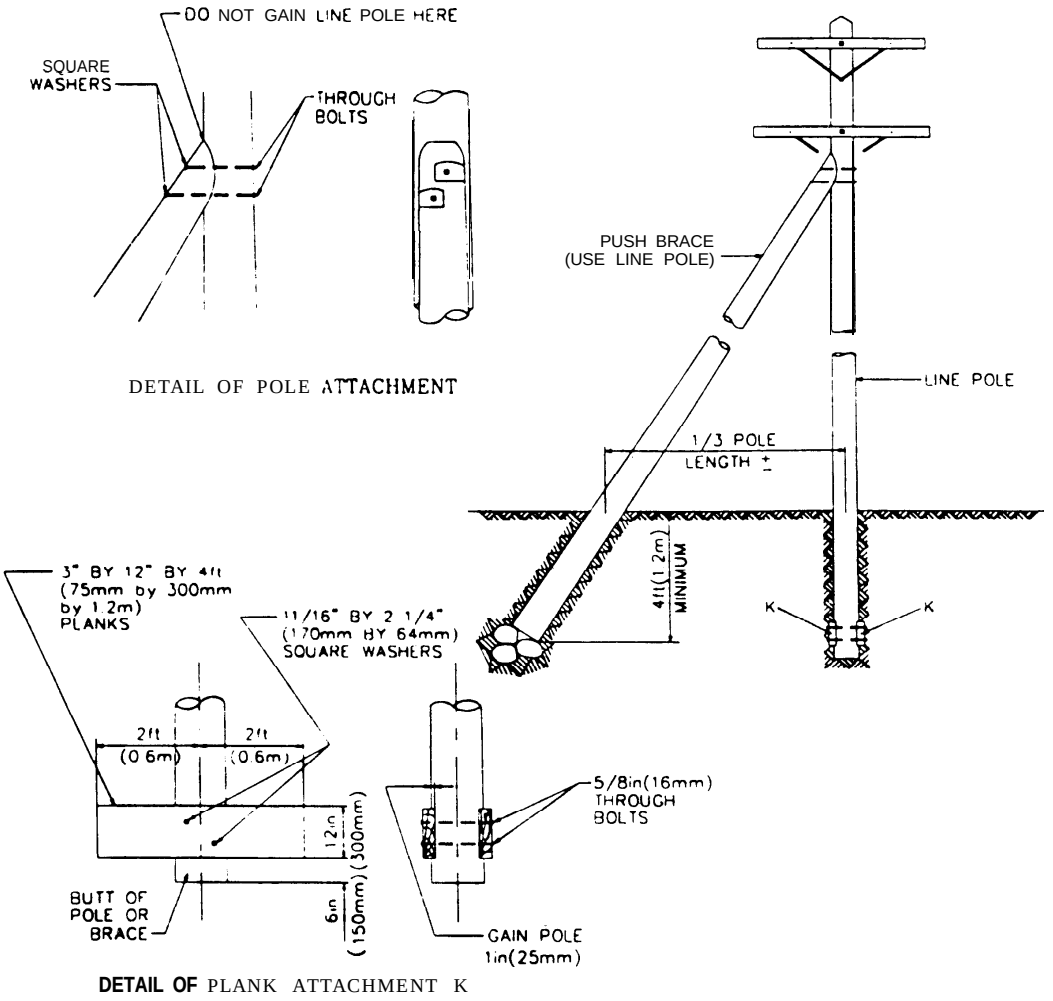

Figure 4-21. Wood-pole push brace

a. Porcelain. Porcelain guy strain insulators are usually of the interlocked (Johnny ball) type. The porcelain is in compression. If breakage occurs the guy is relaxed, but, due to the interlinkage, does not part. In replacing the insulator, consideration should be given to the cause of failure. If the broken insulator was too small, replace with a larger and stronger one.

b. Wood. Wood guy insulators may have been installed, particularly on higher voltage lines, because of their superior impulse resistance. The size and length of the wood member used would have depended on the strength required and the voltage of the circuit. The wood should have been treated with a nonconducting preservative. Arcing horns may have been set according to the need to bypass lightning strokes around the wood. The insulator should be replaced if deterioration or damage affects its strength. When a wood insulator replacement is needed, provide a fiberglass insulator instead.

c. Fiberglass. Fiberglass insulators should be used for guys in lieu of wood. Advantages are their indefinitely long life; their imperviousness to moisture; and their ability to withstand a direct stroke of lightning without bursting. They do not require arcing horns to bypass the lightning stroke. Fiberglass insulators are shorter than wood insulators, so they take up less space. Corrosion or rusting of the metal and fittings will ultimately be the reason for their replacement.

Affordable Wire Management, Exhibit No. EX1010
Case No. IPR2024-00182
Page 59 of 201

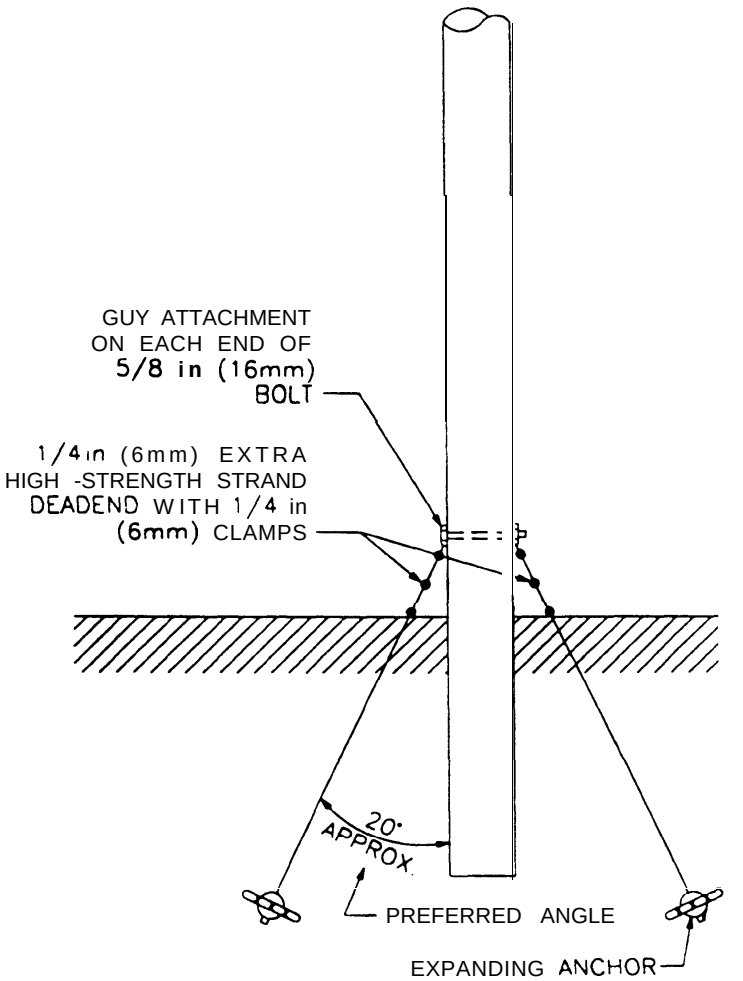

Figure 4-22. Side anchor

Section XIV - TREE TRIMMING

4-53. Tree trimming objectives.

Too much tree trimming impacts on environmental needs. Too little tree trimming impacts on line clearance requirements. The objective is to strike an acceptable balance between the two, considering both cost and safety considerations.

a. Environmental needs. Trees provide shade, reduce glare, keep the air fresh by supplying oxygen and consuming carbon dioxide, filter wind and noise, and satisfy human needs for beauty. They can also pose a hazard to electric service continuity in electric line rights-of-way.

b. Line clearance factors. The branches and limbs of trees growing near overhead lines are a potential source of trouble and service interruption. Trees near overhead lines may be broken off and blown across the line wires during a storm. Limbs may break wires, act as a conductor between wires, or force wires together to cause a short circuit. Limbs growing in contact with the wires provide a path for current to flow to ground, especially when wet. Wires and limbs rubbing together in the wind cause holes to be worn in the insulation, increasing the possibility of service failure.

c. Requirement. Tree trimming must be done before the trouble actually occurs. Although the reason for trimming is to protect the distribution circuits, the effect on the trees must not be overlooked. Trees must be left in as sound of a condition and appearance as possible. If leaving the tree in reasonable condition and appearance is incompatible with necessary clearance, consideration should be given to either raising or rerouting the line, or re moving the tree. Lines should be checked and

Affordable Wire Management, Exhibit No. EX1010
Case No. IPR2024-00182
Page 60 of 201

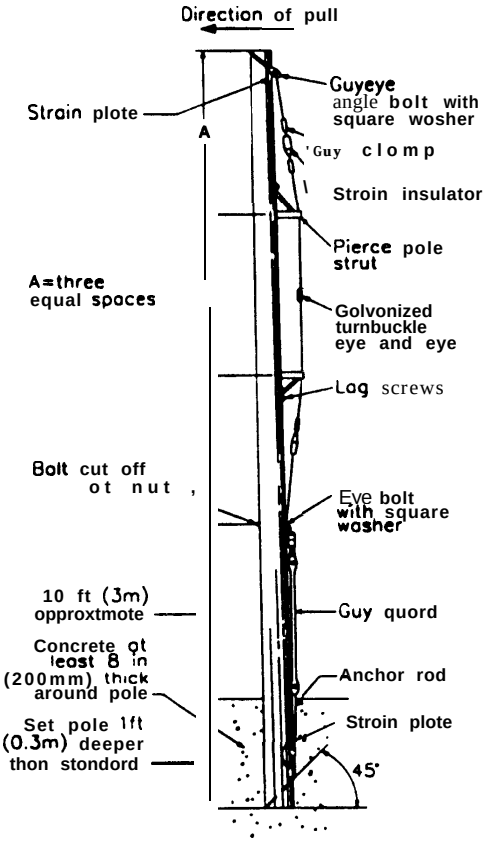

Figure 4-23. Self-supporting, hog-guyed pole

cleared on a planned time cycle and should provide hazard-free operation for at least 2 years to be cost-effective.

Table 4-5. Number of guy wire clamps

Breaking strength of guy stand		Number of clamps	Type of clamp
Pounds	Kilograms		
4,000	1,800	1	Two-bolt
6,000	2,700	1	Three-bolt
10,000	4,500	2	Three-bolt
16,000	7,200	3	Three-bolt

d. Safety precautions. Tree trimming should be done from a bucket to the utmost extent possible. Even maximum use of buckets will not permit all work to be done without climbing the tree. When tree climbing is required, safety precautions must be observed. Refer to ANSI 2133.1 for tree care operations and safety requirements.

4-54. Tree trimming clearances and climbing space.

Minimum clearances to be maintained between conductors and any part of a tree are shown in figure 4-24. These distances may be increased as desired. Note that distances A and B are measured from the normal sagged position of the conductor, and that distance C, D, and E must be increased by the sag at that point. For tree trimming purposes, the 30-inch (750-millimeter) climbing space dimensions shown in figure 4-l should be increased to 40 inches (1,000 millimeters), and distances in figure 4-24 should be increased as required to maintain a 40-inch (l,000-millimeter) minimum climbing space.

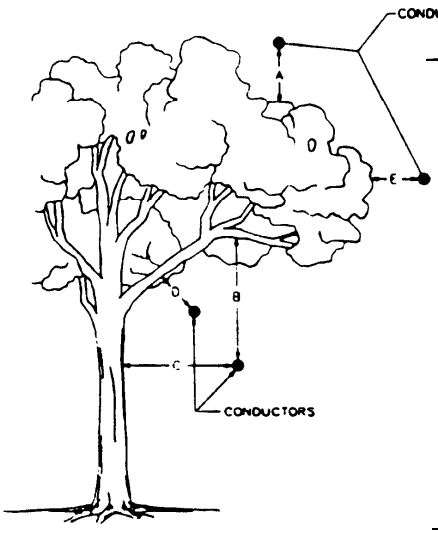

	0 to 750 v and 13.2 Neutral	750 to 8700 V	13.2 Phase to 40 Kv	120 Kv
"A" TOP OF TREE	3ft(0.9m)	5ft(1.5m)	8ft(2.5m)	15ft(4.5m)
"B" OVERHANGING LIMB	15ft(1.5m)	10ft(3m)	AVOID	AVOID
		SAG OF LINE PLUS		
"C" MAIN TRUNK	2ft(0.6m)	2ft(0.6m)	6ft(1.8m)	AVOID
"D" MAIN LIMB	4ft(1.2m)	4ft(1.2m)	7ft(2.1m)	AVOID
"E" BRANCHES	5ft(1.5m)	5ft(1.5m)	8ft(2.5m)	12ft(3.7m)

Includes System Communication Twigs or leaves shall not be allowed to touch System Communication bare wires.

Figure 4-24. Recommended minimum clearances for tree trimming

Affordable Wire Management, Exhibit No. EX1010
Case No. IPR2024-00182
Page 61 of 201

4-55. Tree trimming tools.

Only approved tools should be used for tree trimming. A 30-inch (750-millimeter) one-man crosscut saw, docking saw, forester saw, or pruning saw is used for cutting off any limbs within arm's reach. The type of saw to use depends on the size and location of the limbs to be removed. A pole saw or tree pruner is used for cutting off limbs beyond an arm's reach. If the saws become dull or lose their set, they should be repaired. Sharp tools make the job easier and safer. The first and second sections of the tree pruner are assembled on the ground and then raised carefully to a working position. If more than two sections of the pruner are to be used, the first two sections are assembled on the ground, and then raised and leaned against a limb, pole step, or other object while the third section is added. More than two sections must never be assembled on the ground and then raised, because the pruner is likely to break under the strain.

4-56. Types of tree trimming.

Different species of trees and their location with respect to overhead lines present varying problems of clearance and shaping. Tree-trimming jobs usually come under one of the following classifications, as shown in figure 4-25.

a. Center trimming. Center trimming, when necessary, requires that the limbs he cut away to leave a clear space around the wires. The cuts should be made at tree crotches to encourage the direction of limb growth away from the wires, thus avoiding the need for frequent trimming in the future.

b. Side trimming. Side trimming is necessary when the ends of the limbs on the side of a tree extend into or over the wires. In these cases, the limbs are cut off at a crotch so the limb can continue to grow, but in a direction parallel to or away from the line wires. The amount of trimming needed depends on the size and location of the limbs. Side trimming usually results in notches or an unbalanced tree that looks unsightly. When this is the case, branches or limbs not interfering with wires should be trimmed from the other side so that the tree is balanced.

c. Top trimming. Top trimming is necessary when a tree is growing into the wires. The ends of the

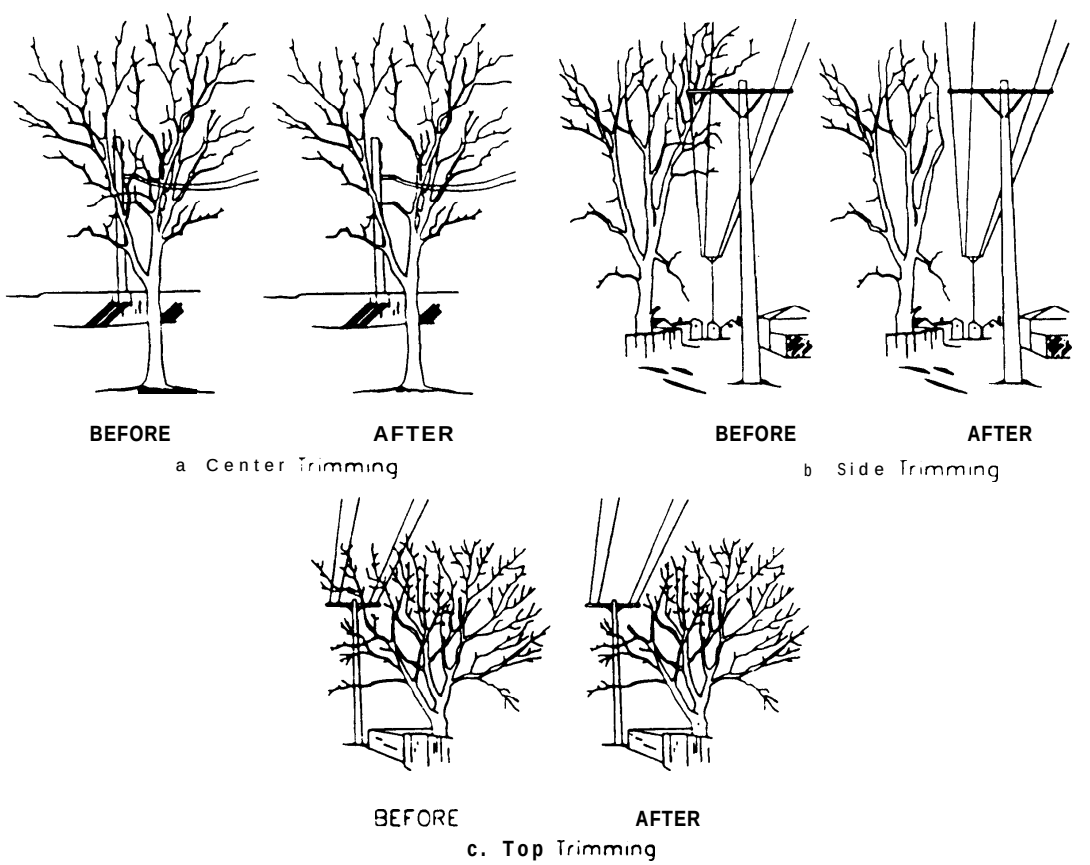

Figure 4-25. Tree trimming to clear electric wires

Affordable Wire Management, Exhibit No. EX1010
Case No. IPR2024-00182
Page 62 of 201

upper branches are cut off to form a well-shaped, low-spreading head below the wires. The natural shape of the tree should be retained as nearly as possible. For tall-growing trees, however, under-trimming or topping the tree is often necessary. Trees usually topped are willow, cottonwood, and poplar. These trees grow rapidly, even after being topped, and have branches more easily broken during storms. A tree topped in this manner usually grows a bushy or broomlike top, which will require more topping in a few years.

d. Undertrimming. Undertrimming is necessary when the under branches of a tree overhang or extend into wires. In some cases, tall trees growing adjacent to the line may be undertrimmed. The overhanging hazard should be relieved as much as possible by shortening or cutting off the tips of the overhanging branches. Sometimes a better remedy for the overhanging condition is to reshape and remove overhanging branches so that they do not grow toward the wires.

4-57. Tree trimming instructions.

The proper methods to use in trimming (pruning) trees requires considerable expertise. Instructions on pruning techniques are contained in the "Lineman's and Cableman's Handbook." This publication, or others which may be locally available, should be consulted before starting tree trimming operations.

a. Removing a limb overhanging wires. In addition to normal cutting and trimming, special handling instructions apply to prevent damage to wires. Two alternative methods, which may not be covered elsewhere, are shown in figure 4-26 and described below.

(1) *Method No. 1.* Use rope No. 1 to pull the center of the limb into the tree when the saw cut on the underside is about two-thirds through the limb. When the cut is completed, use rope No. 2 to prevent the butt of the limb from swinging out. Another rope may be used to guide the limb as it is being lowered.

(2) *Method No. 2.* Use rope No. 1 to prevent the limb from falling on the wires. After the limb is cut on the side away from which it is swung, use rope No. 2 to swing the limb clear of the wires and to pull the limb down after the cut is complete. Rope No. 3 is used to hold the butt of the limb.

b. Large vertical limbs. In removing large vertical limbs, a handline tied well up on the vertical limb is used to control the direction in which the limb is to fall. In some cases it may be necessary to make the limb fall in the direction opposite from which it is leaning. The fall of the limb is stopped by a butt rope. The butt rope should be pulled tight before the cut is completed to reduce the distance the limb will drop. If the limb is cut on only one side, completing the cut before it is lowered to the ground may be necessary. Heavy limbs should always be dropped in a snatch block.

4-58. Treating a tree trimming wound.

An asphalt-base tree paint should be painted or sprayed on every pruning cut larger than 1.5 inches (38 millimeters). This treatment should overlap the area around the cut and is necessary as a deterrent to disease organisms or insects whose entry would be harmful. The color serves to make the cut less noticeable. The paint can be sprayed, *or* brushed using a summer or winter grade type, as appropriate, for flowability. Paint with a growth inhibitor will reduce resprouting at the cut and make second-cycle trimming more economical.

4-59. Tree removal methods.

It is often preferable to remove a weak or diseased tree rather than to go to the trouble and expense of trimming and eventually having to remove it any

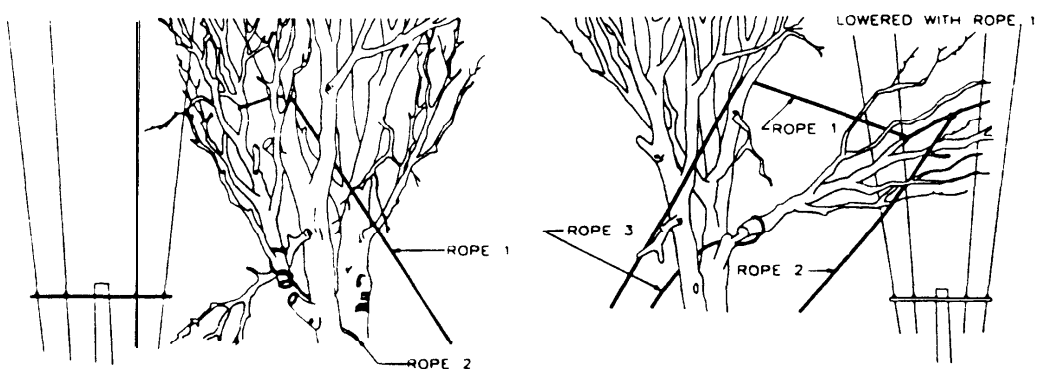

a. Method no. 1 b. Method no. 2

Figure 4-26. Removing a limb overhanging wires

way. Also, where the necessary trimming would result in an unsightly or depleted tree, and the distribution lines cannot be raised or rerouted, the tree should be removed.

a. Felling. Where space permits, the tree should be felled in one piece. It may then be cut up on the ground. To drop the tree in the exact spot desired requires experience and judgment on the part of the foreman. First, cut a notch near the ground line about one-third through on the side toward which the tree is to fall. Then cut from the opposite side with a saw, a few inches (several millimeters) above the previous notch. If there is any question as to the direction the tree will fall, use hand lines or a pulling line as insurance.

b. Piece-by-piece. Where adjacent structures, wire lines, highways, or other limitations prevent felling the tree, it may be taken down piece by piece. Starting on the lower limbs and working toward the crown, limbs are removed, one by one, as in trimming. If the trunk cannot be felled, it must also be removed in pieces.

c. Stumps. The usual practice is to cut the stump at the ground line. This can be done with a power saw or hand crosscut saw by excavating at the sides of the stump to provide clearance for operation of the saw. Power equipment of various types is available for removal of stumps or for cutting them to slightly below the ground line.

4-60. Tree killing chemicals.

Various chemicals are now available that will kill the plant or retard its growth. The installation agronomist, entomologist, or pest control officer should be consulted before any chemicals are used. Since misdirected or windblown spray can cause irreparable damage to plant life adjacent to the right-of-way, do not spray when there is appreciable wind. Protect personnel with rubber gloves and protective clothing when handling the chemicals. Manufacturer's instructions should be followed in mixing and applying chemicals. Local contractors are often available, who are experienced and equipped to do chemical clearing.

4-61. Posionous plants.

Poisonous plants are frequently encountered when trimming trees and removing brush. If the poisonous oily substance from these plants gets on the skin, it should be removed as soon as possible. Smoke, insects, clothing, and direct contact can spread the toxic effects, which are more likely to occur when the skin is covered with perspiration. A preventive cleanser is available which cleanses and decontaminates poisonous oils. Apply the cleanser to the exposed area of the skin for the recommended period and then rise off with cool running water. Other methods, which are not preventive treatments and do not alleviate the damage, are washing the exposed areas of the skin with warm water and brown laundry soap or with rubbing alcohol, then rinsing with clear water, and drying the skin. No brush should be used, as this would irritate the skin. Clothing exposed to the poison should also be thoroughly cleaned.

Section XV - LIVE-LINE MAINTENANCE

4-62. live-line maintenance requirements.

With the use of various types of aerial equipment and hot-line tools, many operations in the maintenance of overhead distribution lines may be performed while these lines are energized. Safety precautions are of utmost importance and personnel engaged in this type work must be thoroughly trained in the procedures and use of the tools and equipment. Departmental safety publications should be consulted for restrictions and certification requirements on live-line maintenance at various voltage levels. Also see requirements in chapter 1, section II. Trained personnel should be familiar with ANSI/IEEE 516 and ANSI/IEEE 935, which provide expanded guidance on energized power-line maintenance methods and live-line tool care. The "Lineman's and Cableman's Handbook" provides pictorial data on tools, equipment, and live-line operation techniques.

4-63. Categories of energized-line maintenance.

Energized-line maintenance means work on any line electrically connected to a source of potential difference, or electrically charged so as to have a potential difference from ground. Synonyms are alive, current carrying, hot, and live. Voltage is considered medium or high if it is over 600 volts up to 230,000 volts, see section II. The categories of work apply to the potential difference from ground at which the worker operates and specific precautions apply to each potential.

a. Workers at ground potential. Workers are located on the structure supporting the conductor or on other work platforms and remain essentially at ground potential using insulating tools and equipment.

b. Workers at intermediate potential. Workers are isolated from grounded objects by insulating means,

Affordable Wire Management, Exhibit No. EX1010
Case No. IPR2024-00182
Page 64 of 201

such as an aerial lift or an insulating ladder or platform, and work with insulating tools and equipment.

c. Workers at line potential. Workers are bonded to the energized device on which work is to be performed and are insulated from grounded objects and other energized devices that are at a different potential. This is commonly known as the barehand technique and cannot be used by facility maintenance personnel.

4-64. Energized-line methods.

Most line maintenance utilizes insulated aerial lifts except where accessibility to the work area is impossible. Aerial lifts can be used for aerial inspections, unenergized line maintenance, tree trimming, streetlighting and lamp replacement; but an aerial lift will most often serve as the elevated platform for live-line maintenance.

a. Maintenance using rubber gloves and other protective equipment. Work is done directly on the lines using rubber gloves and other protective line equipment such as rubber sleeves; rubber insulating line hose and insulator hoods; and polyethylene conductor, insulator, crossarm, and pole covers. The lineman may be standing on a climber gaff, pole-attached insulated platform, or insulated aerial lift for the line maintenance voltage levels (low-voltage up to 15,000 volts medium-voltage) normally performed by facility personnel. Utilities normally use rubber gloves and climbers up to 7,500 volts and platforms or lifts above this voltage to 17,000 volts.

b. Maintenance using rubber gloves, other protective equipment, and hot-line tools. This procedure is normally used for all primary distribution lines maintained by facility personnel.

(1) Utilities use protective equipment and hot-line tools for voltages of 17,000 volts to 26,500 volts and work from insulated platforms or lifts. For voltages above 26,500 volts to 36,000 volts, utilities require aerial lifts.

(2) Approach distances and minimum tool insulation distance requirements must be observed. Rubber protective equipment comes in various voltage classes. Never use equipment rated at less than the maximum voltage involved.

c. Barehand maintenance. Barehand maintenance is done with the lineman at the same potential as the line being worked on. A conductive liner of metal-mesh in the aerial lift (the basket shielding) is brought to line potential using a bonding lead. This lead, which is permanently attached to the mesh, is hot-stick fastened to the energized line conductor. Barehand work can also be performed by linemen in special conducting suits working from special insulating ladders. The insulating suit is connected to the energized conductors to bring the lineman to line potential.

(1) *Policy.* Departmental policy must be complied with in the performance of "arehand" work. It is essential that any personnel involved in "hot-line" work be thoroughly trained and experienced. Barehand procedures require a knowledge of all three methods covered previously and dictate making periodic re-examinations of the worker's ability to safely use the barehand technique. All tools and equipment must be in excellent condition and should be maintained solely for the purpose of performing live-line maintenance.

(2) *Qualified personnel.* Consideration should be given to having this type work done by a qualified contractor, unless the in-house personnel are fully qualified, adequately equipped, and perform this work frequently enough to maintain their proficiency.

4-65. Live-line operations.

All live-line operations require special tools and equipment to perform the variety of work procedures involves in hot-line maintenance.

a. Tools and equipment. The tools and equipment used in live-line maintenance are made specifically for this type of work. They are required to meet applicable acceptance test standards and they must be cared for and maintained to meet in-service standards. Chapter 15, section V discusses these requirements.

b. Operations. The most common live-line maintenance operations are as follows:

(1) Replacing poles.
(2) Replacing crossarms.
(3) Replacing insulators.
(4) Washing insulators.
(5) Cutting out and replacing live conductors.
(6) Tapping a hot line.
(7) Applying armor rods or vibration dampers.
(8) Phasing conductors.

c. Procedures for replacing poles, crossarms, and insulators. To replace any of these items requires that the conductors must be untied or unclamped from their insulators and temporarily supported.

(1) *Poles.* In overhead line maintenance, pole replacement is usually the result of deterioration or damage to the pole. The new pole should be set and the wire tongs, saddles, and other tools needed to support the existing line while moving it to the new pole should be provided. If the old pole must be used to support any tools, temporary bracing may need to be installed to strengthen the weakened pole.

(2) *Insulators.* The usual procedures in the replacement of insulators are as follows:

Affordable Wire Management, Exhibit No. EX1010
Case No. IPR2024-00182
Page 65 of 201

(a) Fasten the wire tongs to the conductor.

(b) Remove the tie or clamp from the conductor.

(c) Move the conductor clear of the work area and secure the wire tong.

(d) Remove old insulator.

(e) Mount new insulator.

(f) Return conductor to insulator.

(g) Tie or clamp conductor to insulator.

(h) Remove wire tongs.

(3) *Crossarms: In replacing crossarms, apply steps (a), (b), and (c) for all lines.* Then remove crossarm and insulators and replace with new crossarm with new insulators in place. Then apply steps *(f), (g),* and *(h).*

d. Washing energized insulators. Hand cleaning of de-energized insulators is described in chapter 3, section IV ANSI/IEEE 957 provides a guide for cleaning insulators.

(1) *Facility procedures.* Each facility should develop procedures based on their level of voltages, contaminants, and available equipment. Using advice from the local utility concerning their energized insulator washing practices is recommended.

(2) *Energized cleaning methods.* Energized cleaning methods include the use of high pressure, medium-pressure, and low-pressure water; compressed air with abrasive dry cleaning compounds; and wiping with burlap cleaning hammocks using hot sticks. All of these procedures are covered in ANSI/IEEE 957.

(3) *Technical considerations of pressurized water cleaning.* Certain items influence the effectiveness of pressurized water cleaning performance and the leakage current that can pass to the operator's body from the water stream. These items are the nozzle conductor distance, the water's resistivity, the water pressure, and the nozzle-orifice diameter. Wind can interfere with the efficiency of the water spray. The washing interval must be such as to avoid flashover accidents during hot-line washing, which can occur when the acceptable limit of contamination has been exceeded. Some points, covered in more detail in ANSI/IEEE 957, are as follows:

(a) Water resistiuity. Water having a resistivity greater than 1500 ohm-centimeters can usually be obtained from city water system hydrants. This is an acceptable low-level resistivity. Water resistivity changes inversely with temperature and must be measured periodically during washing operations, especially in hot weather. In no case should water be used having a resistivity of below 1,000 ohm-centimeters. No soap, detergents, anti-freeze, or alcohol should be added.

(b) Nozzle type. A jet nozzle is more suited to transmission (high-voltage) systems because wind effects the spray less and the spray range is greater. The spray nozzle is suited for distribution (medium-voltage) systems.

(c) Apparatus. Consult manufacturers when washing nonceramic insulators. Bushings made of porcelain must be treated with great care and the effects of water pressure and volume and the mechanical support provided the bushing must be considered. Energized washing of surge arresters may impose severe electrical stresses on the arresters due to voltage imbalance and should not be done without the consent of the arrester manufacturer.

(4) *Safety.* Follow facility rules and general industry practices as covered in ANSI/IEEE 957. The OSHA safe working distance (from Table V-l of Subpart V, Section 1926.950) is the minimum distance recommended for personnel adjacent to energized objects at any time. This distance applies to the phase-to-phase voltage and is 2 feet (0.6 meters) for 2.1- to 15-kilovolt energized parts and 2.33 feet (0.71 meters) for 15.1- to 35-kilovolt energized parts.

e. Other procedures. Cutting out and replacing live conductors requires supporting the conductors and providing a temporary jumper to bypass the current while the splice is completed. The bypass uses hot-line clamps as 'does tapping a conductor. Installation of hot-line clamps, armor rods, and vibration dampers should follow manufacturer's hot-line instructions. Phasing-out requires a phase-tester, which should be connected in accordance with the manufacturer's instructions.

Section XVI-AERIAL LIFT REQUIREMENTS

4-66. Aerial lift construction.

Aerial lifts are required to be constructed to meet ANSI/SIA A92.2. Aerial lifts can be field modified for uses other than those intended by the manufacturer, provided the modification has been certified in writing by the manufacturer or other equivalent entity (such as a nationally-recognized testing laboratory) to conform with ANSI/SIA A92.2 and OSHA Subpart V Paragraph 1926.556 and to be at least as safe as the equipment was before modification.

4-67. Aerial lift specifics.

OSHA has defined equipment which must meet aerial lift rules and electrical tests.

a. Type of aerial lifts. Aerial lifts include the following types of vehicle-mounted aerial devices used

Affordable Wire Management, Exhibit No. EX1010
Case No. IPR2024-00182
Page 66 of 201

singly or in combination to elevate personnel to job-sites aboveground.

(1) Extensible boom platforms.

(2) Aerial ladders.

(3) Articulating boom platforms.

(4) Vertical towers.

b. Manufacture. Aerial equipment may be made of metal, wood, fiberglass reinforced plastic (FRP), or other material; may be powered or manually operated; and is deemed to be an aerial lift whether or not the equipment is capable of rotating about a substantially vertical axis.

c. *Rules.* The following specific OSHA rules apply.

(1) Aerial ladders will be secured in the lower traveling position, by the locking device on top of the truck cab and the manually operated device at the base of the ladder, before the truck is moved for highway travel.

(2) Lift controls will be tested each day prior to use to determine that such controls are in safe working condition.

(3) Only authorized persons will operate an aerial lift.

(4) Belting off to an adjacent pole, structure, or equipment while working from an aerial lift will not be permitted.

(5) Employees will always stand firmly on the floor of the basket and will not sit or climb on the edge of the basket or use planks, ladders, or other devices for a work position.

(6) A body belt will be worn and a lanyard attached to the boom or basket when working from an aerial lift.

(7) Boom and basket load limits specified by the manufacturer will not be exceeded.

(8) The brakes will be set; and, when outriggers are used, they will be positioned on pads or a solid surface. Wheel chocks will be installed before using an aerial lift on an incline, provided they can be safely installed.

(9) General1y, an aerial lift truck will not be moved when the boom is elevated in a working position with men in the basket.

(10) Articulating boom and extensible boom platforms, primarily designed as personnel carriers, will have both platform (upper) and lower controls. Upper controls will be in *or* beside the platform, within easy reach of the platform operator. Lower controls will be in or beside the platform, within easy reach of the at-grade operator. Lower controls will provide for overriding the upper controls. Controls will be plainly marked as to their function. Lower level controls will not be operated unless permission has been obtained from workers in the lift, except in case of emergency.

(11) Climbers will not be worn while performing work from an aerial lift.

(12) The insulated portion of an aerial lift will not be altered in any manner that might reduce its insulating value.

(13) Before moving an aerial lift for travel, the boom(s) will be inspected to see that equipment is properly cradled and that outriggers are in stowed position.

d. Testing. Procedures for testing aerial-lift devices are described in chapter 15, section VIII.

Affordable Wire Management, Exhibit No. EX1010
Case No. IPR2024-00182
Page 67 of 201

CHAPTER 5

UNDERGROUND AND SUBMARINE CABLES

Section 1 - ASSOCIATED GUIDANCE

5-1. Relevant cable guidance.

Maintenance work involving underground or submarine cable changes requires an understanding of the basic design premises of such cables.

a. Types of installations. Underground cables may be installed in conduit, in duct banks, or by direct burial in the earth; submarine cables are usually submerged directly in the water and lie on the bed of the waterway. The terminal ends of both underground and submarine cables are often aboveground. The burial depth of raceways or cables should never be less than the depths permitted by the NEC or the NESC and, in most cases, will be more to conform to facility design practice.

(1) *Cable in conduit removal freplacement.* Although it is easy enough to install several cables in one conduit and mechanically easy to withdraw them, the removal usually ruins the cable. Cables become impacted in a conduit, and, when one is drawn out, the sheath may be stripped either from the withdrawn cable or from one of the other cables. Therefore, when one cable of a set in a conduit fails, all cables must be replaced.

(2) Direct-burial cable reinstallation. Direct-burial cables being replaced must be installed below the frost line.

b. Joint electric supply and communication circuits. Unlike aerial lines, joint structure use is not allowed for electric supply and communication circuits. Communication cables are installed to be completely isolated from electric power cables and require separate ducts and structures. Economy may dictate contiguous structures and duct lines having a common trench excavation. Direct-burial power and communication lines should be separated at least the minimum required distance, usually set by the local communication agency. Control, alarm signalling, and other low-current and low-voltage circuits may be installed in electric manholes, dependent upon facility requirements, but require special shielding or increased insulation levels.

5-2. General construction guidance.

Rights-of-way for navigable waters and identification must meet the following requirements. The influence of conditions which can generate cable failures in the following discussion should be checked for their impacts.

a. Rights-of-way requirements. When the system is being extended across navigable waters within the United States, permission must be obtained from the nearest District Engineer of the U. S. Army Corps of Engineers, who will specify depth requirements and any other pertinent conditions. When crossings are made in waterways under the jurisdiction of other authorities, those authorities should also be consulted.

b. Identification requirements. Because underground and submarine cables cannot be visually traced between structure access points, it is important that they be marked at all points at which they are accessible. Any such cables will be identified by plastic or corrosion-resistant tags wherever they can be worked on and wherever they can possibly be mistaken for another cable. Identification tags will be located at terminations and at least in every structure. If tags become missing or illegible, they will be replaced as part of the maintenance program.

c. Cable impacts. The major cause of electric failure is the breakdown of insulation. Even under normal conditions, an electrical cable experiences stress that will gradually weaken it, leading to failure. Cable tests provide data which permits the anticipation of cable failures. An understanding of items which can accelerate insulation deterioration is of help in determining inspection and testing intervals.

(1) *Cable Loading.* The current-capacities or allowable loading of underground cables is based on the conductor size, material, and assumed ambient temperatures. Complex calculations are required to take all these effects into account. IEEE S-135-1 and IEEE S-135-2 are used as the basis for ampacities given by the NEC. The factors used by the NEC represent a theoretical average value and may be considered to be safe factors, especially if the loading is based on a loo-percent load factor. The load factor for primary circuits on most facilities will probably range from 45 to 65 percent at the time of initial design. Voltage drop, especially at lower voltages, may also have been a factor in determining the cable sizing. The actual temperature conditions affecting the cable become an important consideration. Added loads and variable loads affect cable temperatures both directly and indirectly.

(a) Directly. In general, the higher the temperature, the faster the rate of deterioration in the physical properties of the insulation, including the formation of voids in solid-type or paper-insulated

Affordable Wire Management, Exhibit No. EX1010
Case No. IPR2024-00182
Page 68 of 201

cable. The deterioration usually results in increased dielectric losses and decreased dielectric strength. Large variations in daily temperatures accelerate the possibilities of cable sheaths cracking and bolted or clamped connections loosening. A, short-time large overload, and accompanying high temperature, can produce aging of insulation equivalent to operation for a longer time at a smaller overload. Since power surges contribute to cable aging, a cable serving large motors with full-voltage starters having intermittent loads, or a cable subjected to a higher level of lightning or switching surges, will probably have a shorter life than an identical cable with a constant load and infrequent low-level switching surges.

(b) Indirectly. The temperature of the soil adjacent to a buried cable or conduit system must also be considered as affecting cable life. If cable temperatures become high enough, the moisture in the soil will migrate away from the cable causing a considerable increase in the soil thermal resistivity. This may lead to thermal instability of the soil and further increase its thermal resistivity which, in turn, may cause excessive cable temperatures and, perhaps, even cable failure.

(2) *Cable insulation failure.* Underground primary distribution cables with solid-dielectric insulation have experienced a high rate of electrical failure after several years of operation as the result of carbonized paths (electrochemical tree design markings) usually caused by the presence of water in the conductor.

d. Termination and splicing impacts. Terminations and splices are usually the weakest point in a cable system, and the cable system is usually the weakest link in an electrical system. Therefore, inspection, including riser pole inspections, is doubly important at these points. Where recabling is required do not use "T" splices in manholes, except where the facility's engineering staff concur that avoiding their use is uneconomical.

e. Lightning protection and grounding. Lightning protection for aerial to underground primary cable connections, and grounding and bonding of underground cables, contribute to the protection of the cables and to the safety of the system.

(1) *Surge arresters.* When a transition is made between overhead conductors and underground or submarine primary cables, facility practice requires that a surge arrester be installed at the termination connecting insulated underground cables to aerial bare conductors. A ground rod should be installed and the metallic sheath or armor of the cable bonded to that ground installation. The surge arrester then protects the primary cable from switching or lightning surge overvoltages which could overstress the cable insulation. Secondary cables are usually protected from these over-voltages by primary surge arresters located at pole or ground-mounted transformer installations.

(2) *Grounding and bonding.* All noncurrent-carrying conductive materials in the structure and any neutrals must be grounded. Most standard structures are provided with a driven ground rod. Bonding includes the metallic sheath or armor of all cables, cable shields, manhole hardware, the tanks of all equipment and apparatus, and the secondary neutral of transformer installations. Where nonmetallic-sheathed cable having a ground wire is used, the ground wire is usually brought out at the joint. These ground wires should be grounded to the neutral and the driven ground The resistance of ground connections must meet the requirements given in chapter 10, section III.

Section II - SAFETY PRECAUTIONS

5-3. Cable safety.

The compact spacing of conductors and nearness to any grounded sheaths is the reason that working on energized conductors even at low voltages is prohibited. A voltage detection tester should be used to ensure that the cable is not energized. Materials such as a lead sheath, which will act as a shield, must not be between the tester and the conductors of the circuit being tested. To prevent a de-energized circuit from being energized while it is being worked on, good safety practice requires that the disconnecting means at each end be tagged and locked in the open position, and ground clamps applied.

5-4. Structure safety.

Subsurface structures such as manholes, handholes, equipment vaults, and splicing boxes are subject to accumulation of dangerous gases that may be combustible and/or explosive, toxic, or deficient in oxygen. Before entering any manhole or vault, it must be checked for these conditions.

a. Combustible gases. Combustible gases may be detected by means of a test instrument or safety lamp. When using this equipment, the precautions and instructions provided by the manufacturer should be followed. If it is determined that combustible gases are present, it will be necessary to ventilate the manhole or vault before any work is done.

Affordable Wire Management, Exhibit No. EX1010
Case No. IPR2024-00182
Page 69 of 201

If these tests indicate the presence of an explosive mixture in the structure, an injection of carbon dioxide (CO_2) into the structure may be made, before ventilating, to reduce the possibility of an explosion. Ventilation is best provided by a power-driven portable ventilating blower. Before the structure is purged with a blower, or CO, is injected into it, personnel in connecting structures should be warned, as the gas may be blown through the ducts into connecting structures. If CO, is used, the structure must be purged with fresh air before it is entered by personnel.

b. Toxic gases. A calorimetric indicating gel tube manufactured under specifications of the National Bureau of Standards, commonly referred to as the NBS carbon monoxide detector, is available to test for toxics. It is used by breaking the seals of the tubes and aspirating gas to it from the atmosphere to be tested. Chemicals within the tube change color when carbon monoxide is present. By comparing the change in color with the color chart furnished, the concentration can be determined. Tests of this type can be made in less than one minute.

c. Asbestos-cement fireproofing. Follow instructions for handling in chapter 15, section II.

d. Ventilation. Even when tests indicate there are no combustible or toxic gases, it is good practice to force-ventilate a manhole or vault whenever personnel are in it. This is especially important if cable splicing is being performed.

e. Protection of open structures. Open structures should never be left unguarded. A barricade should be placed around the structure opening prior to removing the structure cover.

f. Ladders. Portable ladders used for access to manholes or vaults should be checked before use to ensure that they are firmly placed and will not wobble or tilt.

Section III - INSPECTION

5-5. Frequency of underground system inspections.

The frequency of inspection is largely determined by the importance of the equipment or facility it serves or contains. Inspections can vary in frequency from 6 months to 5 years, but a 2-year cycle of inspection is recommended. Records should be kept of each inspection.

5-6. Structure inspections.

Inspect structures and check their cleanliness and their physical condition, such as cracking of walls, roofs, or floor slabs, spalling of concrete, and the condition of frames and covers. Inspect for corrosion of pulling eyes; driven grounds; and other miscellaneous fixtures such as cable racks, arms, and insulators.

5-7. Cable inspections.

Walk the route of underground direct-burial cable circuits to inspect for changed conditions. Changes in grade caused by washouts can expose cables to damaging conditions. Adjacent new construction should be closely monitored. Examine connections to equipment terminals or cable terminations, whether in the structure or above-ground. Check in structures for the condition of duct entrances, fireproofing, splices, cable tags, and ground connections to cable shielding and sheathes. Anchors for submarine cables should be inspected occasionally to be sure they are in good condition and functioning as intended. Look for signs of traction on cable terminations or direct-burial cable which may be a result of expansion and contraction of the cable.

a. Cable supports. Check mountings and supports to ensure they are secure. Remove rust and corrosion and clean and repaint supports with corrosion-resistant paint.

b. Duct entrances. End bells are usually used to prevent cable damage at duct entrances. If they were not installed, or are damaged, strips of hard rubber or similar material should be used to protect the cable at the duct entrance.

c. Testing. Cable insulation integrity cannot be visually checked; it requires some type of insulation testing to determine whether the cable is reaching an insulation breakdown that will lead to a cable fault. Testing is described in section VII.

d. Cable faults. Inspection alone may reveal the location of a cable fault or it may be a more complicated process requiring test equipment. Visual and test procedures are covered in section V.

5-8. Underground equipment inspections.

Special maintenance for such distribution equipment in underground locations includes the following:

a. Keep items clean and protected from corrosion.

b. Check equipment covers to be sure that their gasketing is water-tight.

c. Keep nuts and bolts free from rust by applications of paint or heavy grease.

Affordable Wire Management, Exhibit No. EX1010
Case No. IPR2024-00182
Page 70 of 201

Section IV - MAINTENANCE AND REPAIR OF DUCT SYSTEMS

5-9. Structure maintenance and repair.

Maintenance and repair of structures is a continuous procedure but is seldom extensive. Pump out structures as necessary to allow complete inspection. Major breaks or settlement of structures causing large cracks require investigation of the structural condition and rebuilding to eliminate the cause.

a. Duct Line entrances. Grout up chipped concrete at the mouth of the duct line as necessary. Heavily loaded cables will crawl because of expansion and contraction, which results from the alternate heating and cooling effects of changing loads. The mouth of the duct line must be kept clean and free of burrs and small patches of concrete that will damage cables.

b. Water leaks. Most structure repair requirements consist of stopping water leaks in the floor and walls of frequently entered structures. Depending on the terrain, the pumping of one structure may involve the removal of water from adjacent structures. In applicable locations, all vacant ducts should be plugged with standard duct plugs, and all occupied ducts should be sealed so as to prevent water or gas from entering vaults or any users' premises.

(1) *Occupied duct sealing.* Use a nonhardening sealing material that will not harm the cable to seal occupied ducts. These nonhardening compounds consist of emulsified vegetable oils containing fibers or asphalt compounds. Oakum is often packed around the cables as backing for the sealing compound. Use a ready-mixed commercial sealer and follow the manufacturer's directions.

(2) *Wall leakage.* Water leakage through the walls of the structure will usually occur along joints or void areas. Some leakage may be found where the ducts enter the structure. Using a cold chisel and hammer, chip out the porous area so that the patch will bond against sound concrete. The hole can then be patched with calcium-chloride putty or quick-setting cement mortar.

(3) *Floor leakage.* If water is entering through the floor of the structure, clean the floor and remove accumulated silt. If the floor is generally sound except for the joints at the wall or for isolated cracks, repairs can usually be made as covered above. If the concrete of the floor shows evidence of general porosity or disintegration, it is better to pour a new floor, as follows:

(a) Where a reduction in headroom of 4 to 6 inches (100 to 150 millimeters) will not affect the utility of the structure, a new floor may be poured directly over the old floor. Otherwise, the old floor should be broken out and a new floor poured.

(b) When necessary to break out the old floor, the first step is to excavate for a temporary pump sump about 12 inches (300 millimeters) below the old floor level if the structure has no existing sump. When the floor has been removed, continued pumping may be necessary. Further excavation will be necessary if added headroom is desirable. A permanent sump or a storm drain connection should be considered when the new floor is poured.

5-10. Duct line maintenance and repair.

Most damage to duct systems results from new unrelated construction and settling of ducts. Too often, the new construction fails to locate an adjacent duct line accurately and damages the line. Ducts sometimes settle where they cross older understructures, whose overlay was completed without adequate backfilling and tamping. Duct settling is often not apparent unless cable failure results or an empty duct is rodded in preparation for pulling in new cable. In either event, the condition must be investigated and repaired. A new structure at the point of settlement may possibly be the quickest and cheapest repair.

Section V - CABLE FAULTSAND FAULT LOCATIONS

5-11. Cable faults.

Whenever cable insulation breaks down, resulting in an underground cable fault, fuses should blow or circuit breakers should open to prevent further system damage. Faulted circuit indicators (FCIs), where provided, may also provide an indication of a cable fault.

a. Reclosing on a fault. The practice of applying automatic reclosers on medium-voltage aerial distribution lines presents a problem when underground distribution lines are supplied from aerial lines which have reclosing features. The recloser is intended to prevent extended outages due to transient disturbances on aerial lines. But repeated reclosing on an underground cable fault tends to create unusually high fault resistances. Reclosing serves to aggravate an underground cable fault which may then stress upstream circuitry.

b. Aerial-to-underground line connections. Fuse protection is required to be provided at or near riser poles where such connections are made. When any aerial lines feeding underground cable systems are provided with automatic reclosing, that feature should be designed so that any permanent fault on

Affordable Wire Management, Exhibit No. EX1010
Case No. IPR2024-00182
Page 71 of 201

long underground feeder will blow the associated cable riser fuses within a time period that limits to one reclosure, the damaging effects of automatic reclosing on the faulted cable feeder.

c. Check of associated equipment and lines. Blown fuses and open circuit breakers may be caused by a cable fault or by faults on equipment or other lines connected to cables. Preliminary tests should be made to determine that the fault is actually in the cable and not in associated equipment.

d. Faulted circuit indicators. As noted, reclosing on faulted cable circuits stresses the circuit elements and can increase potential personal hazards. On critical feeders, FCIs are often installed to reduce service restoration time by providing a convenient means of determining fault current occurrences, location, and direction on underground circuits.

(1) *Operation.* An FCI can be a single or multiphase device which senses fault current has passed through the line conductors at the point where the FCI is installed. The FCI is designed to provide a fault current indication by a flag, a light emitting diode (LED) display, or other means. The current sensing is done by detecting the magnetic field strength generated by the circuit's alternating current.

(2) *Location.* Most FCI s are installed on underground distribution current-carrying elements such as cables, switch and transformer elbow terminations, and separable connectors. They are also used on aerial lines.

(3) *Application.* The proper application of FCIs is crucial to their correct operation. Units must be correctly designed for indicator trip and reset methods. Inrush restraint, time delay, and coordination may be necessary. Other considerations when selecting FCIs means that their initial provision requires engineered design.

(4) *Maintenance use.* Use FCI sets to locate distribution faults. Normally where installed, the number of FCI sets will be one less than the number of cable sets which can be sectionalized. The faulted cable section will be between a "fault" and a "normal" indication.

(5) *Concerns.* If units are damaged they must be replaced with like units having the same features. Their operation in regard to trip and reset must be understood. If loads are changed and the unit does not have an adaptive trip (tripping on a sudden increase above the nominal current followed by a loss of current) then the trip setting must be changed. The reset may require manual means or may be reset by other actions such as predetermined time, current, voltage, or other sensing methods.

5-12. Visual methods of cable fault locating.

Since visual inspection can be the easiest and quickest way to locate a cable fault, it should be tried first. Visual inspection may require checking secondary effects, such as leaks from the cable-insulating medium. If visual inspections are not effective, then testing devices will need to be used.

a. Faults in exposed cable and splices. A quick check may be made by driving over the route of the cable and looking for such things as a displaced structure cover, smoke coming from a structure, or indication of damage caused by digging operations. A more detailed inspection may be made by examining the terminal equipment and the cable and splices in the structure. Look particularly for the presence of compound on the cable sheath, smoke, and odors of a burnout. Observe the requirements of section II.

b. Faults in submarine cable. Oil slicks may occur on the surface of the water near the location of the fault, or bubbles may appear where the cable is faulted. Applying high current from a low-voltage source to the faulted cable may cause bubbles to rise to the surface near the fault, thus determining the approximate location. For short submarine cables, establishing a line of sight between the terminal ends and patrolling this area may aid in locating a point of failure. Maps used in laying the cable will be helpful in establishing the cable route.

c. Faults in gas-pressurized cable. When a fault occurs on gas-pressurized sulfur-hexafluoride (SF,) cable, do not re-energize the cable until the following steps have been taken.

(1) *Low gas pressure.* Gas pressurized cable is usually pressurized at 20 to 80 pounds per square inch gage (135 to 550 kilopascals gage). A record of the installed gas pressure should be kept for all gas-pressurized cable sections.

(a) Checking pressure. Check the gas pressure at terminations and splices with a tire gage. If the pressure has dropped to zero or is dropping, the fault damaged the conduit or jacket containing the gas. Since gas is electro-negative, a gas detector similar to that used for refrigeration gases can be used to locate the leak at terminations, splices, and other points.

(b) Detecting leaks. To detect a gas leak along a buried duct or conduit line, a pipe can be driven into the ground above the line and the probe in the pipe may detect the gas. Another method to detect a leak in the line is to inject gas at one end and measure the pressure drop at access points. Dry nitrogen can be used for this method. Then plot the pressure reading to locate the spot in accordance

Affordable Wire Management, Exhibit No. EX1010
Case No. IPR2024-00182
Page 72 of 201

with the manufacturer's directions. After a leak is located, a repair can be made in accordance with section VI.

(2) *Satisfactory gas pressure.* If the pressure is satisfactory, do not re-energize the circuit until the fault has been located and repaired, since the high fault current reimposed on the failed cable can further damage the cable.

5-13. Determining type of cable fault.

Use fault locating equipment when a check of associated equipment and lines confirms that the fault is actually in the cable, and visual methods fail to locate the fault. Since no single test will locate all types of faults, the type of fault must be determined in order to use the best test method to locate it. To determine the type of fault, any source of direct-current voltage can be used with a voltmeter or a suitable low-voltage lamp. A portable testing set, such as a multimeter of the volt-ohm meter (VOM) type is most commonly used. The section of cable under test must be disconnected from feeders, buses, and equipment. Alternating current should not be used, because the charging current of the cable is sufficient to prevent accurate indications of the condition of the cable.

a. Types of faults. Cable insulation failures result in low- or high-resistance faults, because one or a combination of the following conditions occur.

(1) One or more of the conductors may be grounded.

(2) Two or more conductors may be short circuited.

(3) One or more conductors may be open circuited.

b. Checking for fault types.

(1) *Grounded conductor.* In checking for a grounded conductor, the VOM is successively connected between each conductor and ground with the far end of the cable open circuited. A good conductor will indicate a resistance commensurate with that of its insulation. A grounded conductor will show a very low resistance.

(2) *High-resistance grounded.* Some installations are grounded through a high resistance. These systems operate like an ungrounded system and the first ground fault does not trip out the system, but only sounds a warning. The ground fault can be traced using an integral system pulser and a detector furnished as a part of the system.

(3) *Short circuit.* In checking for a short circuit, the VOM is successively connected between each possible combination of conductors. Far ends of the cable must be open-circuited. A low reading indicates a short circuit between the conductors under test.

(4) *Open circuit.* The continuity of the conductors is determined by grounding the conductors at the far end and then testing between each conductor and ground. If the conductors are continuous, the resistance reads low; and, if an open circuit exists, the tester will indicate a very high resistance.

5-14. Cable fault locating test methods.

The methods generally used may be separated into two major classifications: terminal measurement methods and tracer methods. Except in the case of faults on series lighting circuits (which usually result in considerable carbonization because of the constant-current system involved) the resistances of faults are often quite high, ranging from several hundred ohms to megohms when measured at a low-voltage level.

a. Terminal measurement methods. Terminal measurement methods involve determining the chosen electrical value of the faulted conductor from one of the cable terminations to the fault, and comparing this value with the same electrical value on unfaulted cable. The proportions of the electrical values in regard to the length of the unfaulted cable provides the fault distance. The effectiveness of all terminal measurement methods is dependent upon the accuracy of installation records. While most of the work is done at one terminal, access to the other terminal may be necessary to connect or disconnect conductors as required. Terminal methods include the Murray loop, the capacitance bridge measurement method, the quarter-wave or half-wave resonance methods, and the pulse (time domain reflectometer) method.

b. Tracer methods. These methods require test equipment at the cable terminal but rely on checks along the cable tracer to locate the fault. Tracer methods include the modulated direct-current method, the modulated alternating-current method, the impulse (thumper) method, the audio frequency (tone tracing) method, and the earth gradient method.

(1) *Tracer method warning.* Some of the tracer methods of fault locating can ignite residual gas in the vicinity of a fault and cause explosions. The likelihood of such an occurrence, while extremely remote, cannot be ignored.

(2) *Structure testing.* Normal gas tests with combustible gas detectors should be made prior to entering structures during all fault-locating operations, regardless of the urgency of the situation or the type of fault-locating equipment being used. It is also advisable to use a carbon monoxide (CO) tester to check the atmosphere in structures where fault repairs are to be made, particularly in cases where

Affordable Wire Management, Exhibit No. EX1010
Case No. IPR2024-00182
Page 73 of 201

substantial quantities of cable insulation have been destroyed by the fault. Gas concentrations in structures can be dispersed by a thorough purging with a positive-pressure blower. Gas testers and their application are discussed in section II.

5-15. Simplifying cable fault locating.

Locating faults in cables can be a complicated process. The following paragraphs provide some helpful hints which can simplify the process and increase fault-locating accuracy.

a. Fault reduction. In cases where the parallel resistance of a fault is too high to allow effective application of either tracer or terminal measurement devices, the fault resistance must be reduced, that is it should be carbonized or "burned down". Direct-current high-potential test sets, as described in section VII can be used for this purpose. The fault reduction is accomplished by applying a continuous potential between the faulted conductor and ground. The voltage level is adjusted to give the maximum current allowed by the rating of the test set. As the fault carbonizes, a continually decreasing voltage will be required to sustain this current. The fault reduction has been accomplished when virtually no voltage results in a steady flow of current and fault-locating operations can then proceed.

b. Conductors grounded. If one conductor of the faulted cable remains ungrounded, terminal measurement devices can be used. If the fault grounds all conductors and low parallel resistance results, only tracer methods can be effectively applied. The ohmic value of the fault may be used in some cases to anticipate the effectiveness of the various tracer methods that could be applied.

c. Conductor-to-conductor resistance. When a fault results in a low-resistance short circuit between two conductors and the resistance to ground is high, reflection methods may be made effective if the single phase fault can be reduced to a ground fault before attempting to locate the fault. If the single-phase fault cannot be reduced to a ground fault, one of the conductors involved may be grounded at a termination. Depending upon the relative location of the grounded termination, the signal pattern and its level and direction may be quite different from that obtained when locating an ordinary grounded fault.

d. Conductor continuity. Use of a bridge-type terminal measurement device depends upon the availability of a continuous ungrounded conductor in the faulted cable, which can be looped to the faulted conductor at the far end of the circuit. The faulted conductor, though grounded, must also be continuous. The required continuity is best checked by making a bridge measurement of the resistance of the closed loop to be used for fault-locating measurements and comparing this measurement to known circuit constants. Conductor continuity generally will have no effect on the operation of tracer-type fault-locating equipment. Faults exhibiting both high series resistance (open conductor) and high parallel resistance (ungrounded conductor) can be located by using a capacitance-type terminal measurement device.

5-16. Cable fault locating equipment.

Cable fault locating equipment is available from test equipment rental companies. Member companies of the InterNational Electrical Testing Association (NETA) can be hired to test and to provide the test equipment. As with all techniques used infrequently, the skill of trained outside personnel may well be worth the additional cost,. "Electrical Equipment Testing and Maintenance" covers terminal and tracer cable-fault locating methods in more detail for those who wish an explanation of testing technique principles. Three of the methods using less complex methods of measuring some electrical characteristics of faulted cable are shown in figure 5-1. Another method uses a time domain reflectometer tester.

a. Murray loop resistance bridge method. To use this method, the grounded conductor must be continuous at the fault and a continuous ungrounded conductor in the faulted cable must be available. The accuracy of this method is directly related to the accuracy of the plans showing cable routing. The fault is located in terms of its distance from its cable terminal by measuring and comparing electrical characteristics of the cable's faulted and unfaulted conductors. It is essentially a Wheatstone bridge of the slide-wire type. When the bridge is balanced, the fault distance is found as indicated in figure 5-1. A number of slide-wire bridges designed for fault location are available commercially. They range from inexpensive units with limited accuracy to more expensive units which can locate a fault within one foot per mile (0.2 meters per kilometer) of cable length. Instructions for use, including applicable mathematical formulas, should be supplied with the instrument.

b. Capacitance bridge measurement method. The capacitance bridge measurement method is effective where both the parallel and series fault resistances are high enough to treat an unfaulted and the faulted conductor as capacitances to a metallic shield or sheath. This technique is simply the measurement of capacitance from one end of the faulted cable to ground and comparing it in terms of distance with the capacitance of an unfaulted conductor in the same cable. Almost any alternating-

Affordable Wire Management, Exhibit No. EX1010
Case No. IPR2024-00182
Page 74 of 201

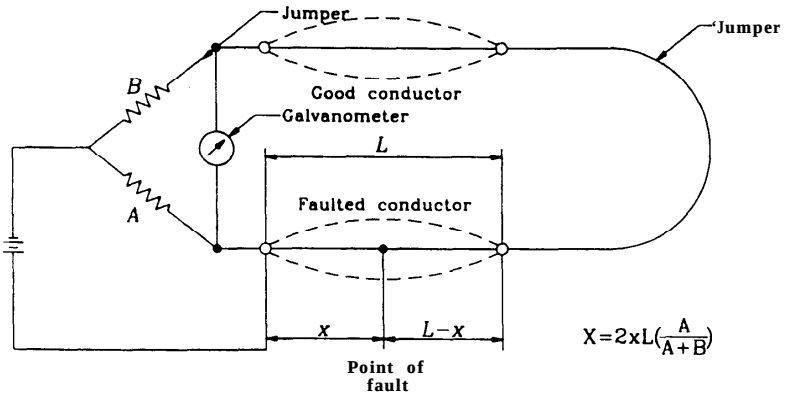

Murry loop bridge method

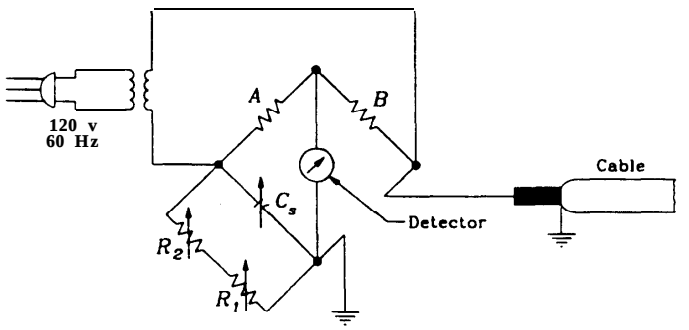

Capacitance bridge measurement method

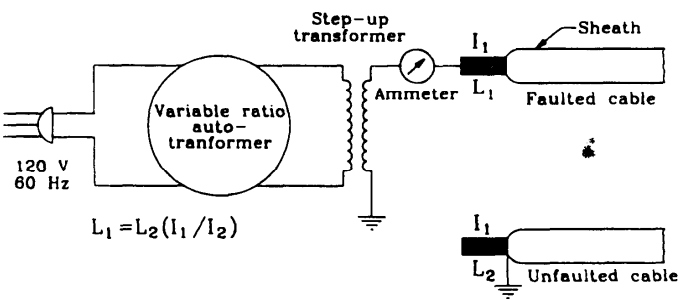

Charging current method for fault location

Figure 5-l. Terminal equipment and cable connection diagrams

current capacitance bridge is suitable, provided it measures capacitance to ground.

c. Charging current method. In the absence of an alternating-current bridge, the charging current on the faulted conductor and on a good conductor may be compared, using several hundred volts or even several thousand volts at 60 hertz as the voltage supply. This circuit with its fault distance formula is shown in figure 5-1.

d. Time domain reflectometer (TDR) method. This method is based upon the measurement of the time "t" it takes a generated pulse to reach a fault and be reflected back. The fault distance “d” equals the cable propagation velocity “v” multiplied by “t” and divided by two which results in equation 5-l.

$$d = vt/2 \qquad \text{(eq. 5-1)}$$

(1) *Distance determination.* The TDR/analyzer measures the reflection time and the fault distance is automatically calculated based on the entered velocity of the pulse travel which is usually the ratio of the cable's propagation factor to the speed of light or a value of less than one. The analyzer can determine whether the fault is open-circuited or short-circuited based on waveform reflections as shown in figure 5-2.

Affordable Wire Management, Exhibit No. EX1010
Case No. IPR2024-00182
Page 75 of 201

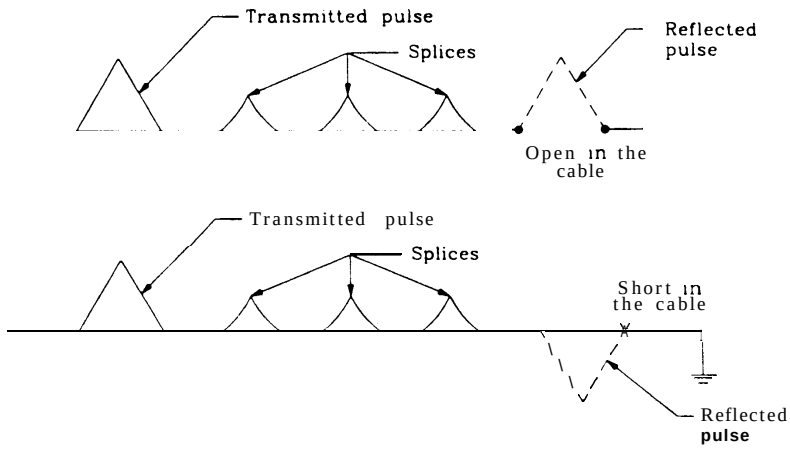

Figure 5-2. Cable fault waveform reflections

(2) *TDR test settings.* Tests require selecting a pulse duration and a propagation factor.

(a) Pulse duration. The pulse duration must be wide enough to be interpreted by the TDR analyzer and at least about one percent of the transit time for the entire length of the tested cable. TDRs should have provisions for changing the pulse width depending on cable length.

(b) Propagation factor. This is the velocity of the pulse in an insulated cable and will vary inversely as the square root of the product of the cable's line constants, that is, its inductance and capacitance. Therefore it will vary dependent upon cable insulation. A propagation factor of 500 feet (152 meters) per microsecond for medium-voltage cables or 600 feet (183 meters) per microsecond for low-voltage cables is sufficiently accurate when fault distance measurements are made by two-end fault pin-pointing.

(3) *Two-end fault pin-pointing.* A propagation factor set to any value (which must remain unchanged for both measurements) can be used to provide a TDR-measured fault distance from each end of the tested cable. These two distances will either come short of meeting or overlap each other. The true distance to the fault "d_t" can be calculated by equating the determined fault distance from end one "d_1" to the fault distance from end two "d_2" and the distance between these two points "d_p" using equations 5-2 and 5-3, respectively, based on whether the determined fault distances fall short or overlap.

$$d_f = d_1 + (d_2 + d_p)/ (d, + d_2)$$

$$d_f = d_1 - (d_2 + d_p)/ (d, + d,)$$

5-17. Tracing the cable fault signal.

A halving procedure can be used to trace faults where the signal cannot be traced along the entire length of the cable in any other way. It is time consuming and costly, and more modern methods utilizing the sophisticated signalling instruments available should always be applied if possible.

a. Procedure. The procedure consists of localizing the fault by progressively limiting it to one half of the previously considered length of cable. The points along the cable route chosen for signal measurement must be selected so that maximum fault localization results from each and every measurement. Thus, the first measurement should be made as close to the midpoint of the circuit as possible; the second at the one-quarter or three-quarter point, depending on the fault location given by the first measurement; and so on.

b. Drawbacks. This procedure requires cutting the cable. For cable in duct an access point is needed, or the duct line must be broken and a new structure provided for resplicing. For direct-burial systems good cable will need to be respliced in a new splice box. Resplicing can introduce other possible trouble points.

5-18. Selecting cable fault locating methods.

The fault locating method differs dependent upon the way the cable is installed. Most installations will be in duct lines, but direct-burial and submarine cable installations must also be considered.

a. Duct line. The fault-locating equipment used is generally a tracer type. Pinpointing of the fault between structures is unnecessary. The entire length

Affordable Wire Management, Exhibit No. EX1010
Case No. IPR2024-00182
Page 76 of 201

between structures of a faulty cable must be replaced. If a structure does not contain a cable splice it may be augmented by a resonance or radar terminal method.

b. Direct burial. Fault-locating for direct-burial installations must pinpoint the fault, so that the repairs can be made at the point of failure. Such faults generally can be best located with impulse equipment such as the TDR method. Faults can also be located by patrolling the cable and listening for the noise of an impulse discharge at the fault. On longer cables it may be preferable to use some other means, such as a terminal measurement, to obtain an approximate fault location. In the absence of audible noise, test holes must be dug so that detector tests can be made using a tracer method.

c. Submarine cable. The approximate location of a submarine cable fault must be determined by terminal measurements.

(1) *Locating the fault.* Verification of location can be made by pulling the cable out of the water at the point indicated by the terminal measurement. When the portion of the cable suspected to be at fault is raised, it is generally necessary to apply a tracer method to verify the fault location. The impulse method is ideally suited to this application, as the noise of the discharge is usually quite evident when the faulted section leaves the water.

(2) *Cable sheath leaks.* Emergency maintenance of submarine cables frequently involves repair of a leak in the cable sheath. When a leak is evident, it should be located as soon as possible; the cable raised; and the damaged section removed to prevent migration of moisture into the cable. Repairs should be made in accordance with standard splice procedures for submarine cables covered in section VI.

d. Gas-pressurized cable. Use a high-resistance method such as any terminal method, except the Murray bridge loop, or use the impulse tracer method.

Section VI - CABLE REPAIR

5-19. Underground cable repairs.

Underground cable is usually either direct burial or installed in ducts. While repair methods described below are basically the same for any underground cable, there are some differences depending on the installation condition.

a. Direct burial. While there may be splice boxes, normally there is no structure to consider, and a hole will have to be dug to make the repair. This may be a test hole used to pinpoint the fault location. Such access may have to be enlarged, if the repair involves an appreciable length of cable. The major problem in repairing direct-burial cable may be to provide a dry environment while making the repair. A temporary shelter may be required.

b. Duct line. If the faulted cable length is in a duct line between structures, there are several repair methods. Usually, only one circuit is installed in a duct line in order to avoid cable capacity derating.

(1) *Spare duct.* If there is a spare duct available, the simplest solution may be to pull a new length of cable into this duct and connect it at both ends to the good ends of the faulted cable. Then pull out the faulted cable, if possible, to provide a spare duct. At the very least, tag at both ends to indicate that this cable has been abandoned in place and is faulty.

(2) No *spare duct.* The cable should be pulled and a new cable installed. If this is impossible because of duct damage, a new duct must be installed. Alternately, it may be faster and more economical to open up the duct line at the fault point. If the cable can be repaired without a splice, the duct line can be reclosed. It may be necessary to build one or more new structures at the point to house any new cable which needs to be spliced into the existing cable to replace the faulted section. The method to be used is largely a matter of judgment based on all the factors known at the time.

5-20. Submarine cable repairs.

When the approximate location of the fault has been determined, the cable should be lifted to the surface for examination and repairs. The cable may be located with a grapple hook and lifted with a barge-type crane. If the cable is difficult to locate, the services of a diver may be required to determine the location and to attach a line for lifting the cable. After the cable has been hoisted to the surface, it should be cut at the location of the fault to determine if (and how much) water has entered the cable. The most expedient method of determining the distance the water has entered the cable is to cut the cable 25 to 50 feet (8 to 15 meters) on either side of the fault. This distance depends somewhat on the time that the cable has remained in the water after the fault occurred and the type of cable insulation. At the point where the cable has been cut, a sample of insulation should be tested for moisture as covered in section VII. If there is evidence of moisture at the first cut, then a second section should be removed and another test made. This operation should be continued until the point

Affordable Wire Management, Exhibit No. EX1010
Case No. IPR2024-00182
Page 77 of 201

is reached where moisture is no longer present in the insulation.

a. Replacement of cable section. The cable section which has been removed should be replaced by splicing in a new cable of sufficient length. The cable manufacturer's splicing kit instructions should be followed for making splices which will probably have to be made on a boat or barge. Care should be taken not be bend the cable sharply where it enters the water or where it rests on the bottom. When the cable is again laid in the water, the top must be carried out and laid down in such manner that there will be no sharp kinks or bends in the cable.

b. Protection of submarine cables. Because submarine cable is relatively unprotected as it lies on the bottom of a body of water, special precautions must be taken to prevent damage from swift currents, boat anchors, or other causes. Normally, these precautions are taken during the original cable installation and are not the concern of repair and maintenance personnel. The following paragraphs describe steps to be taken if original precautions were omitted, or if original precautions were disturbed in the process of cable repair.

(1) *Anchors.* When a cable crossing is subjected to flow or tidal currents, cable anchors are generally required to prevent excessive drifting of shifting of the cable along the bottom. These anchors are usually made fast by a series of U-bolts which pass through a common base plate, thus affording a multiple grip of the cable. Other U-bolts, eyebolts, or alternate means are usually provided for attachment of the anchor cable or chain. Ordinarily, the anchors are masses of concrete sufficiently large to resist the draw of the current. When the water is shallow, anchors may be placed on the cable as it is being reeled out. When a deep-water crossing is encountered, attachment of the anchors to their chains must be done by a diver.

(2) *Warning signs.* Suitable warning signs indicating the location of the shore ends of a submarine cable, and stating that anchoring of vessels is prohibited in the immediate vicinity of the cable anywhere along its length, are required for every submarine cable crossing.

(3) *Pile clusters.* Clusters of piles are frequently driven at the shore lines of important cables where they enter and leave the water. These aid in locating the points where the cable is anchored. Pile clusters also provide a certain amount of mechanical protection for the cables and furnish platforms on which to mount warning signs.

(4) *Maps.* The development of accurate maps is one of the most important tools in maintenance and repair of a submarine cable installation. It ensures that the cable can be picked up at any desired point for repair or inspection. Maps should indicate the exact location of the cable at various points along its length, as established by measurements with surveying instruments. Maps should also indicate the exact length of cable installed between any two reference points, so that any movement or drifting of the cable on the bottom can be estimated.

5-21. Cable repair safety.

Cable repair will involve: working with other cables which may or may not be energized; ensuring that the grounds and bonds essential for safe operation are in good condition; and, in some cases, dealing with hazardous substances.

a. Energized cables. Repair work on electric cables should be done unenergized. However, other cables in the manhole may be energized and inspections will usually be done with cables energized. Moving cables while energized should be restricted to low-voltage cables in good condition and with adequate bending radii. When the condition of any insulation is questionable, or cables are installed to their permissible bending radius limits, a small change in radius to an energized cable could cause a fault.

b. Grounding and bonding. Inspection and maintenance of cable grounds are as important as the inspection and maintenance of cables, both for safety and for corrosion mitigation. Ground rods should also be inspected.

c. Hazardous substances. Hazardous substances, such as lead or asbestos, should be replaced when the cable repair work requires their removal; such as pulling new cable in ducts sealed with lead or asbestos or splicing cables having asbestos fireproofing. Encapsulating materials are available which will prevent asbestos fibers from becoming airborne. See chapter 15, section II.

5-22. Making cable repairs.

In many cases, the fault will be in either an existing splice or a termination, and the repair is comparatively simple. In other cases, the fault will be in the cable itself, and the repair involves removing a defective cable length and splicing in a good length. The replacement must be the same as the original cable or a type of cable comparable to and compatible with the original cable. Splice kits and termination kits should be used as much as possible. The following paragraphs contain general instructions for the various types of cables. More detailed instructions are given by the manufacturers of the cable and splice kits used for any specific job. After the repair is completed (and before backfilling for direct-burial cable) insulation resistance and poten-

Affordable Wire Management, Exhibit No. EX1010
Case No. IPR2024-00182
Page 78 of 201

tial tests should be made to determine that the cable, including the new repair, is suitable for use. Refer to section VII.

5-23. Solid dielectric cable repairs.

The vast majority of cable used in most installations will be solid dielectric cable. Solid insulation for power cables is divided into two main categories-thermosetting and thermoplastic. A thermosetting material is one that requires heat to vulcanize or crosslink it. This process causes a chemical reaction and the insulation will have little tendency to soften if reheated. Thermoplastic insulation will soften repeatedly when heated. Ethylene-propylene rubber and cross-linked polyethylene solid dielectric cable, which are both thermosetting, should be considered when replacing any old medium-voltage cable.

a. Use. Most facility cable will be single-conductor type installed in duct. Direct-burial concentric-neutral cable, usually installed in housing areas, may be single-phase or three-phase. Direct-burial or submarine cable, armored or gas pressurized, is usually three-conductor cable.

b. Repair. The repair of solid dielectric medium-voltage cable may be accomplished by the use of preassembled splice kits, which are available for the various types of cables and their protective coverings, if any. Particular attention should be given to ensure that the material used for the repair is compatible with the cable insulation. Low-voltage cables which do not have cable shields and are not provided with armors or metallic sheaths can be repaired with jacket repair sleeve kits which seal and repair insulation damage. These sleeves may be appropriate on medium-voltage cables when only the jacket is damaged.

5-24. Other cable insulation and covering repairs.

Cable insulations other than solid dielectric compositions are now being installed only where special circumstances justify their use. Varnished cambric and paper insulated cables, however, may still be in service at this time. Gas-pressurized cable with solid dielectric insulation is used for underwater installations to provide mechanical protection, prevent the entrance of water, and minimize electrical losses which can arise from armor protection. Protective cable coverings require appropriate repair.

a. Varnished-cambric insulated cable. Varnished-cambric insulation requires little or no maintenance where cables terminate in potheads. Some varnished-cambric insulated cables are provided with lead sheaths. However, where terminations are not in potheads, the terminal ends should be checked periodically for leakage of compound and breaks in insulation where moisture can enter and cause deterioration. Where the cable is not terminated with potheads, leakage of compound may occur. In such instances, an electrical adhesive tape, designed for medium-voltage splices, should be applied over the varnished cambric and should be painted with a sealer paint to stop the flow of compound. If it is suspected that the varnished-cambric insulation has absorbed moisture, a moisture test (as described in section VII) should be made. Should the insulation become damaged, it may be replaced with varnished-cambric and covered with friction or adhesive tape, or the ends of varnished-cambric tape can be secured with cotton tape and painted with an insulating paint.

b. Paper-insulated lead-covered cable. A paper-insulated lead-covered (PILC) cable always has a lead sheath and therefore requires little maintenance. Testing at regular intervals will indicate the condition of the insulation. A break in the lead sheath will expose the paper to moisture and a moisture test should be made. If several layers of paper have been removed, they should be replaced with varnished-cambric tape. In order to do this, it may be necessary to remove a longer section of lead sheath. The section of lead sheath removed should be replaced with a new lead sheath and wiped in place in the same manner as a splice. The repairs described above can only be made in a structure. If it appears there has been a break in the lead sheath within a duct, it will be necessary to replace a length of cable between structures or between terminals.

(1) Should a PILC cable fail again shortly after a repair or lengthy de-energization, the cable may be completely unusable. However, prior to replacing, make an attempt to “dry out” the cable by forcing a low-voltage, high current through the cable (via an arc welder) for not less than 12 hours. Current should be as high as possible but must not exceed 80 percent of rated cable ampacity.

(2) Do not support PILC cables by using metal straps or supports or by laying them on metal trays because of the deteriorating galvanic action.

c. Lead-sheathed cable. Lead sheaths may crack or suffer other damage as a result of fatigue due to cable movement or bending. If a section of lead sheath is seriously damaged or badly cracked, the section of sheath should be removed and the area covered with a lead sleeve. The sleeve should be wiped in place in the same manner as a splicing sleeve. Where the damage is not too serious, repairs may be made as follows:

Affordable Wire Management, Exhibit No. EX1010
Case No. IPR2024-00182
Page 79 of 201

(1) Scrape the lead in the vicinity of the damage.

(2) Preheat area using an acetylene or gas blow torch. Care should be taken not to melt lead.

(3) Apply a good flux such as stearine.

(4) Apply solder and heat to a point where it is pliable.

(5) Work solder into sheath with a paddle or stick and smooth.

(6) Wipe with wiping pad.

d. Concentric-neutral cable construction. The neutral conductor of this type of cable consists of equally spaced strands of wire or flat strap wrapped spirally around the outside of the cable insulation. Concentric neutral cables may be of a single or multiple conductor configuration and may have an outer protective jacket over the neutral conductors. Care must be used in handling the cable to prevent the concentric-neutral conductors from loosening or bunching together in one place around the cable circumference. If this occurs, it may cause tracking of the insulation or affect the voltage stress distribution within the insulation. The number and size of the concentric conductors are determined by the manufacturer in accordance with ICEA standards. Repairs should ensure that the operating characteristics of the concentric neutral are not adversely affected.

e. Gas-pressurized cable. Repairs may be required for this cable because of a loss of pressure from a leak in the outer covering or conduit or a puncture in the solid dielectric cable.

(1) *Gas pressure.* The high density of the gas may result in a zero gage reading even though sufficient gas is still present to keep out air and moisture. If the cable is under a water-pressure static-head, then a pressure of 0.5 pounds per square inch gage (3.5 kilopascals gage) is needed for each foot (0.3 meters) of water head to continue to keep water out.

(2) *Repair of gas Leaks.* Follow the manufacturer's recommendations. A beep detector should be used to ensure all leaks have been repaired. Surfaces should be clean and smooth, and the pressure must generally be dropped back to zero.

(3) *Treatment of gas.* The SF, gas used is non-toxic and odorless. However any arcing produced by the fault will result in the gas producing toxic materials that smell like sulfur and rotten eggs. Do not breath this gas. Let it dissipate to the air and clear it from a structure. Since the gas will be outside the shield with a solid dielectric cable, the cable can fail without arcing the gas. If a cable were to fail and burn a hole through the insulation and then be re-energized, a very small amount of gas in the hole could arc and may be noticeable. The smell and toxic gas will dissipate fast. Follow instructions for SF, gas handling in chapter 15, section II.

(4) *Cable insulation.* If the cable insulation fails, the repair should be made as given for solid dielectric insulated cables.

f. Armor. There are various types of armor to provide mechanical protection for the cable insulation and some armor is provided with a protective jacket.

(1) *Flat metal armor.* When flat metal armor is broken, it can be repaired in place by soldering the broken part or by overlapping a short piece of armor and soldering. The armor should be thoroughly cleaned and tinned before soldering. If the armor becomes loose at the ends of the cable, it may be wired to the lead sheath or a lead sleeve installed at each end.

(2) *Inter-Locked armor sheath.* The interlocked armor sheath may sometimes be separated during installation. Short sections of this armor can usually be worked into place (one section at a time) by using a hammer and screwdriver or other blunt instrument. The armor may sometimes become dented. When not too seriously dented, no repair should be attempted. However, if the dent is serious enough to cause possible injury to the cable, a section of armor should be removed and replaced with a sleeve.

(3) *Wire armor* The wire armor over submarine cable may sometimes become bent and separated. In such cases, the armor should be replaced, bound with wire, and soldered. The binding wires should be of a metal similar to that of the armor. If the wire armor is broken, it can be repaired in a similar manner. After the link has cooled it should be painted with a heavy coat of insulating compound to reduce any possible dissimilar metal corrosion.

(4). *Protective jacket over armor.* Sometimes a protective jacket such as rubber, thermoplastic, or braid is placed over the armor for protection against corrosion. Should these jackets become damaged, the damaged area can be repaired by wrapping with thermoplastic tape or self-vulcanizing tape.

5-25. Other cable component repairs.

Potheads and terminations should be checked along with any cable fireproofmg.

a. Terminations. The insulators should be kept clean, and bodies of the compound-filled terminations, such as potheads, should be checked for leaks. A leak will usually be indicated by oozing out of the compound. In such instances, the leak should be repaired and the pothead refilled. A power factor test (as covered in section VII) of the termination and cable will give some indication of the condition of the termination so far as electrical leakage and

Affordable Wire Management, Exhibit No. EX1010
Case No. IPR2024-00182
Page 80 of 201

losses are concerned. Installation of other terminations should be in accordance with the instructions of the termination manufacturer for the type of cable involved.

b. Cable fireproofing. Where cables of more than one circuit pass through structures, any fireproofing material around cable sheaths should be maintained to prevent damage from adjacent cables.

Section VII - CABLE TESTING

5-26. Cable tests.

Tests are made on installed cable for two reasons-to check the condition of the cable and for a cable requiring maintenance to ensure that the repair was properly made.

a. Type of voltage tests. Insulation resistance measurements and direct-current, over- or high-potential test (direct-current hi-pot test) are the usual direct-current voltage tests for cables. A dielectric absorption test which takes longer than a standard insulation resistance test may aiso be appropriate. A fourth test is the power factor test.

b. Testing frequency. The periodic testing of installed medium-voltage cables is known as proof testing, since its purpose is essentially a means of proving that weak spots in existing cables have been recognized before failure occurs. Cables normally have a higher failure rate in the first 2 years of service, which is the period when manufacturing defects will show up. An alternating-current test is used for factory testing of new cable. Acceptance and proof testing utilizes direct-current testing which, while not as effective as alternating-current, is less liable to damage cable. Direct-current testing provides extremely valuable historical data and allows comparison of the acceptance testing value to the periodic proof testing values. A yearly overvoltage test for the first 2 or 3 years, and then testing every 5 or 6 years, is the optimum and can reduce in-service failures by a factor of about nine to one as opposed to not having a proof testing test program. Insulation resistance tests should be based on the importance of the circuit; once a year is usually adequate.

c. Other tests. Varnished-cambric and paper-insulated cables may require moisture tests. Gas-pressurized cable may require leak tests. Refer to section V.

5-27. Cable insulation resistance tests.

Insulation resistance is the resistance which the insulation presents to a flow of current, from an impressed direct-current voltage. An insulation resistance test is a short-time test made to indicate the suitability of the insulation for the purpose intended, or to indicate whether an overpotential test can be made without damaging the insulation. It is not a dielectric strength test, but will give an indication of the insulation's condition with respect to moisture and other contamination. Because any insulation resistance test will measure the insulation resistance of all items connected together, the cable to be tested must be completely disconnected from all other cable and equipment.

a. Measuring equipment. All measurements require a direct-current source which can be a hand-cranked generator, a motor-driven generator, a battery-supplied power pack, rectified alternating current, or its own internal power source. The measuring devices can be as follows.

(1) A megohmeter which is a contained instrument (commonly called "megger," although "Megger" is the trade name of a tester of this type made by James C. Biddle Co.) consisting of an indicating ohmmeter and an internal source of direct-current voltage.

(2) A resistance bridge.

(3) A voltmeter.

(4) A voltmeter and micro-ammeter.

b. Megohmeter. The most convenient and commonly used way to measure resistance is to use a self-contained instrument giving a direct readings in ohms, kilohms, or megohms. Measurement is obtained by connecting one instrument terminal to the cable conductor or the equipment terminal and the other instrument terminal to the metal sheath, frame, container, or support of the insulation under test. Instruments are available in voltage ratings of 500 to 2,000 volts or more. Care must be taken to use a voltage which does not exceed the insulation rating of the item being tested. Follow specific instructions provided with the instrument being used. This type of instrument is not very accurate or sensitive in very low ranges and should not be used to measure a few ohms or fractions of ohms, such as resistances of conducting paths.

c. Resistance bridge method. A self-contained instrument, called a Wheatstone Bridge, containing a battery, a galvanometer, and known resistances, is used to compare an unknown resistance with a known resistance. Each instrument contains detailed instructions for its use. While very accurate results can be obtained, a bridge is basically a laboratory instrument and requires a fairly skilled operator. It is not recommended for field work.

d. Other methods. Both the voltmeter method and the voltmeter/micro-ammeter method require laboratory type instruments and a separate source of direct-current voltage. They are inconvenient to use in the field and are not recommended. However,

Affordable Wire Management, Exhibit No. EX1010
Case No. IPR2024-00182
Page 81 of 201

if desired, some details can be found in the "American Electricians' Handbook.

e. Factors affecting insulation resistance. Personnel making and interpreting the results of insulation resistance tests should consider the following factors which affect the test readings:

(1) *Temperature.* Insulation resistance varies with the temperature, and the effect of temperature depends on many other things, such as type of insulation, amount of moisture in and on the surface, and the condition of the surface. All spot-test readings should be corrected to a base temperature such as 40 degrees C.

(2) *Moisture.* The amount of moisture in the insulation has a large influence on its resistance. For meaningful results, tests of insulation resistance should be made under as near similar conditions as practical. A long cable can be exposed to different conditions along its length so a comparison of readings not made at the same point may be misleading.

f. Interpretations. Usually, because of the stored capacitance of the cable there will be an initial ampere dip toward zero followed by a steady rise. The spot-test reading should be taken after a 60-second voltage application. A cable 1,000 feet (300 meters) long will have an insulation resistance of one-tenth of that for a l00-foot (30-meter) cable, provided all other conditions of both tests were identical. A gradual decline in resistance with age is normal; however, a sudden decline means insulation failure is imminent and a continued downward trend indicates insulation deterioration, even though measured resistance values are above the minimum acceptable limits.

g. Dielectric absorption test. This test is usually conducted at higher voltages for extended periods of from 5 to 15 minutes. Since the current is inversely related to time, insulation resistance will rise gradually for a good cable but will flatten rapidly otherwise. Periodic readings should be taken and plotted against time. The ratio of the lo-minute to the l-minute resistance is known as the polarization index. A polarization index of two or higher indicates good insulation, while a polarization index of less than one indicates cable deterioration the need for immediate maintenance.

5-28. Cable overvoltage tests.

A hi-pot or overpotential test is an overvoltage test used to check a cable for its relative condition after it has been repaired or otherwise worked on. Neither the insulation resistance test nor the dielectric absorption test can determine the dielectric strength of cable insulation under normal use. A hi-pot test is the only way to gain proof that the cable insulation can still withstand over-voltages caused by normal system surges. As noted, alternating-current tests are reserved for factory tests to determine whether the insulation had any discontinuities, voids, or air pockets. Less destructive, direct-current tests are used for installation proof testing. Also, most equipment for direct-voltage testing is smaller and more readily portable. A 115-volt alternating current power supply is rectified to provide direct-current for testing. Several commercial types are available. Each type comes complete with transformers, rectifiers, instruments, and controls.

a. Voltage. Normally, the maintenance proof tests performed on cables are at a test voltage of 60 percent of the final factory test voltage for new cable/equipment. Determination of voltages for acceptance and proof tests should be made by qualified electrical engineers, and such tests should be made only when specifically directed by an engineering activity having jurisdiction over the installation. Tests should be performed in accordance with ANSI/IEEE 400. It is always appropriate to conduct the insulation resistance measurement test first; and, if the data obtained is within acceptable limits, to proceed with the direct-current overpotential test.

b. Procedure. For each cable, the test should be made between each conductor and every other conductor and between each conductor and ground. For the test to ground, all conductors may be connected together. There is no need to disconnect other equipment from the cable, but caution must be observed to ensure the test voltage is not greater than recommended for any of the equipment. Some preassembled or premolded cable accessories may have a basic insulation level lower than the cable tested, and the lower voltage should be taken from IEEE 48 test limits or the manufacturer's test limits, whichever is smaller. If a test shows poor results, items and/or conductors should be retested separately until the defective portion is identified. Specific instructions furnished with the tester being used should be carefully followed. Additional information is contained in chapter 7, section II.

c. Safety. When making high-voltage tests, all applicable precautions regarding live electrical conductors should be observed to avoid dangerous electrical shock. After testing, the terminals should be short circuited before disconnecting the tester from the equipment. The short circuit should be maintained for at least as long as the time the proof voltage was applied.

d. Test data. There are three types of direct-current hi-pot tests commonly performed. In all cases, leakage (conduction) current is measured and

Affordable Wire Management, Exhibit No. EX1010
Case No. IPR2024-00182
Page 82 of 201

the values compared either on a voltage or a time basis for initial to steady-state values or for a constant rate of leakage current.

(1) *Initial leakage current.* The initial leakage current upon a test voltage application will include transient capacitive charging and dielectric absorption currents. Two other currents, corona current and surface leakage current, can be bypassed by installing correct guarding circuits.

(2) *Steady-state leakage current.* The initial value will decrease to a steady-state value consistent with the system's charging current. If correctly done, only the volumetric leakage current will be left. This current is of primary interest in the evaluation of an insulation's condition. The decay of transient current time is known as the stabilization time.

(3) *Constant leakage current.* In some cases, a constant leakage current is measured. This is maintained by increasing the test voltage in a manner which maintains the same current.

e. Tests for relative cable condition. Two tests are used to determine the relative cable condition as an identification of its dielectric strength under medium-voltage tests.

(1) *Leakage current versus voltage test.* In this test, equal voltage steps are applied until the maximum test voltage is reached or an indication of a breakdown voltage is indicated. It is usually recommended that no less than five and, if possible, eight equal steps be made with no less than 1 and up to 4 minutes stabilization time allowed. The steady-state leakage current is plotted against the applied voltage. As long as the slope of the plot is the same, the insulation is in good condition. If the leakage current increases noticeably, so will the slope of the curve. Any change in the slope indicates that any voltage increase may cause insulation breakdown and the test should be stopped.

(2) *Leakage current versus time test.* This test is made after the maximum test voltage of the previous test has been determined. The maximum voltage is left on for 5 minutes and the leakage current is read after 30 seconds, 1 minute, and then at 1 minute intervals thereafter up to 5 minutes. The leakage current is plotted against time as the initial high value reduces to a steady-state value. A continuous decrease indicates a good cable. There should be no increase in current during this period.

f. Test for cable withstand strength. A go/no-go test is usually performed after repair if only cable withstand strength requirements need be verified. The test provides a rising voltage up to the specified value applied to maintain a constant leakage current. A period of 1 to 1.5 minutes for reaching the final test voltage is usually adequate. The final test voltage is held for 5 minutes. If the current has not increased sufficiently in that time to trip protective devices, the cable withstand voltage is adequate.

5-29. Cable power factor tests.

Power factor testing is a nondestructive ac test which has been utilized for many years to measure or test the integrity of substation insulation systems including cables.

a. Test theory. An insulation to which voltage is applied will act like a resistor and capacitor in parallel as shown in figure 5-3. The capacitive current I_C will be much larger than I_R so the angle θ will be close to 90 degrees and the power factor (cosine of θ) will be very small.

b. Cable power factor test limitations. Cable insulation can be considered to consist of a simple element of capacitance in parallel with resistance as shown in figure 5-3. The measured power factor is the average of the entire length of the cable. If a section of cable increases in power factor the high value obtained for that section will be averaged with the normal value obtained for the remainder of the cable. The influence that the defective section of the cable has on the overall cable power factor depends on the relationship of the defective section length to the overall cable length. Thus, the ability

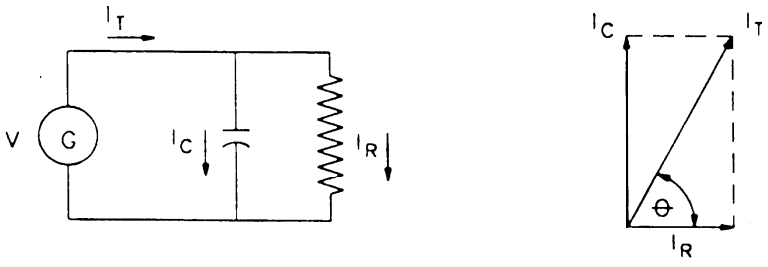

$$\text{POWER FACTOR} = \frac{\text{WATTS}}{\text{VOLTAMPERES}} = \frac{VI_R}{VI_T} = \text{COSINE } \theta$$

Figure 5-3. Insulation power factor equivalent circuit and vector diagram

Affordable Wire Management, Exhibit No. EX1010
Case No. IPR2024-00182
Page 83 of 201

to detect a localized fault diminishes as the length of the cable under test increases.

c. Effectiveness of power factor tests. Power factor tests can be effective in detecting defective insulation for short cable runs which are common in electrical substations and industrial complexes, and for indicating general deterioration and/or contamination of longer lengths of cable insulation runs. This test can be performed at any voltage that does not exceed the line-to-ground voltage rating of the cable. In addition to checking cable insulation, this test can be used to find:

(1) Any defects in the shield circuit which can lead to localized problems. The measurements should be performed on each end of the cable. The shield should be grounded for the test only at the end where the test connections are made. An increase in power factor can indicate discontinuities or breaks in the shield.

(2) Any defects in cable terminations, particularly compound-filled potheads, can be determined by using collar tests as covered in chapter 3, section VII.

d. Power factor tip-up testing. Normally, power factor should be independent of voltage as shown by the formula of figure 5-3. An increase in power factor at an increased test voltage is usually an indication of insulation voids. These voids are ionized at the higher voltage and act as resistors resulting in a greater resistive current and therefore a greater power factor. This increase in voltage is called power factor tip-up test.

(1) Two to five measurements should be made at voltages with an overall 5 to 1 ratio in order to determine whether there are any significant differences in the measured power factors.

(2) Generally differences are not a concern unless the higher value exceeds 25 percent of the lower value. This much change indicates that further investigation of the cable insulating quality is required.

e. Cable test data. Power factor data obtained from the field tests should be compared with any available previous test data in order to detect any changes. Lacking any initial test data, evaluation of the condition of the cable insulation may be made by a comparison of the field data with tabulated power factors obtained for similar insulated cables known to be in good condition, or with the manufacturer's published specifications. Table 5-1 indicates typical acceptable power factors for various cable insulations which may be used if no other data is available. Ranges given should not be used to justify variations in tip-up test values.

Table 5-l. Typical power factor ranges for various cable insulating materials

Cable insulation	Power factor ranges[1]
Polyethylene	0.001 to 0.002
Cross-linked polyethylene	0.001 to 0.002
Oil and paper	Less than 0.005
Rubber	0.005 to 0.04
Varnished cambric	0.04 to 0.08

[1] At 20 degrees centigrade

f. Temperature correction. Temperature has an influence on the power factor values. However, at the operating temperature normally encountered in the field, this influence is minimal for modern insulation systems. Older forms of insulation may require a temperature-correction factor. It is difficult to obtain accurate field cable temperature measurements; hence, most utilities evaluate the condition of the insulation of their cables based on test data, uncorrected for temperature. If it appears that high cable temperature may have influenced the results it is recommended that a cable having a high power factor be retested at a time when a lower cable temperature will occur.

5-30. Cable moisture tests.

Tests for moisture may be made on paper and varnished-cambric insulation by removing one or two layers of the insulation and dipping it into oil heated to a temperature of 260 to 285 degrees F (125 to 140 degrees C). If the insulation contains moisture, a concentration of bubbles will be emitted from the paper. If there is no moisture present, there will be little or no bubbling. Generally, the outer layers of insulation are tested first, as they are the most accessible for testing and the most apt to show moisture. Where moisture is indicated in the insulation, successive layers should be removed and tested until there is no evidence of absorbed moisture. All moisture-damaged cable should be replaced with new cable.

5-31. Cable test records.

It is very important that cable records be made for any inspection or test on any circuit. Such records should flag when the next inspection or maintenance outage is to be made. Since these tests require taking the cable out of service, advantage can then be taken of the maintenance outage, rather than taking a cable out of service for tests only. The trend of the reading obtained will determine whether the cable is stable, slightly aging, or rapidly deteriorating. Slight decreases in the insulation resistance each year are to be expected as the cable ages. Tests should be made more frequently if more than the usual decrease indicates that deterioration is approaching a critical state.

Affordable Wire Management, Exhibit No. EX1010
Case No. IPR2024-00182
Page 84 of 201

Section IX - UNDERGROUND CORROSION CONTROL

5-32. Importance of corrosion control.

As corrosion often results in deteriorated equipment leading to electrical outages, its control is necessary. While corrosion can occur because of many reactions, underground corrosion of metallic cable sheaths and grounds is the most common and costly type of corrosion found in electrical distribution systems.

5-33. Types of corrosion.

There are two basic types of corrosion. One is purely chemical in nature and is the reaction between elements, such as water and iron to cause rust. The other is galvanic corrosion and is an electrochemical reaction between dissimilar metals in an electrolyte. An example of the first type is rusting of a steel nail in a glass of water with no other metal involved in the reaction. An example of the second type is corrosion between copper and aluminum conductors, in which moisture serves as the electrolyte.

5-34. Prevention of corrosion.

Maintenance personnel must be alert to minimize the effects of corrosion inherent in exposure to the elements or resulting from installation methods that did not properly address galvanic effects.

a. Chemical corrosion. Prevention of chemical corrosion is relatively easy to accomplish by proper painting or other surface protection.

b. Galvanic corrosion. In electrical systems, galvanic corrosion is caused primarily by protective metallic cable coverings, such as lead or steel; by the grounding system, which is usually copper or copper coated; and by metal conduit, either galvanized or ungalvanized. TM 5-811-7, MIL-HDBK-1004/10 and AFI 32-1054 cover galvanic corrosion in detail.

CHAPTER 6

OUTDOOR LIGHTING

Section I--LIGHTING AND CIRCUIT TYPES

6-1. Outdoor lighting use.

Outdoor lighting includes public way, recreational, airfield, and security or protective lighting, whether installed on buildings or detached supports. The primary purpose of outdoor lighting is to provide lighting for exterior facilities, which require some degree of lighting during times of reduced visibility for safety or for observation. Poles which support outdoor lighting should be maintained as described in chapter 4, sections VII and VIII. Outside building-mounted lighting is considered interior lighting, if its sole purpose is to facilitate entrance into that building.

6-2. Types of lighting circuits.

Most lighting circuits will be of the multiple circuit type. Generally series circuits are used for only airfield lighting systems (except for very small airfields) to provide uniform brightness to all lights in a circuit. Some older streetlighting and protective lighting circuits may also be supplied from series circuits.

a. Multiple circuits. Multiple circuits use constant-voltage single-phase inputs, usually of *120, 208, 240, 277,* and 480 volts. The lights are connected in parallel. There are no code restrictions on the location of 120-volt lamps. When installed on buildings, circuits exceeding 120 volts, but not exceeding 277 volts to ground, need to meet NEC requirements for their distance from windows, platforms, and fire escapes. Circuits exceeding 277 volts to ground, but not exceeding 600 volts, need to meet NEC pole and structure mounting height requirements.

b. Series circuits. In a series circuit, all of the lamps are connected in series. The same current, therefore, flows through all the lamps and the voltage varies. The power is supplied through a constant-current transformer (regulator). These transformers are available to supply circuits rated 6.6, 15, or 20 amperes. The most common value of current used is 6.6 amperes and only 6.6 and 20 amperes are used for airfield lighting circuits. The lamps may be connected either directly to the series circuit or to insulating transformers connected to the series circuit. Most series airfield lighting circuits use insulating transformers. Series circuits may be installed as an open-loop, a closed-loop, or a combination of both. In the closed loop and combination systems the conductors are close together in numerous places so the circuit can be conveniently short-circuited when troubleshooting. Series circuit voltages range from 2,400 to 7,200 volts, in order to maintain the constant current. Therefore, series circuits must always be treated as medium-voltage circuits.

Section II-MULTIPLE TYPE LIGHTING

6-3. Multiple type lighting system components.

A multiple type lighting system consists of luminaires, mounting structures for luminaires, the control system to switch luminaires on and off, and the input circuit which provides the low voltage to operate the luminaires. Generally, some type of power transformer will provide input low voltage. Transformer requirements are provided in chapter 7.

6-4. Luminaires.

The basic, most visible part of an exterior lighting system, is the combination of luminaire and lamp or lamp/ballast. All gaseous conductor lamps require ballasts. A bare lamp at the end of a pair of wires will emit light, perhaps in large amounts, but only a part will be directed to where it will be useful and the rest is wasted. Luminaires are used to direct the light where it is wanted and, if necessary, to house the ballast.

6-5. lamp types.

There are two types of lights used in outdoor luminaires. These are filament types and gaseous conductive types. Filament lamps use the filament for conducting current. Gaseous conductive types use an ionized gas or vapor for the electron flow and are of the electric-discharge lamp type or fluorescent lamp type.

a. Filament lamps. The two types of filament lamps are the incandescent lamp and the tungsten-halogen lamp. The tungsten-halogen lamp adds a halogen regenerative cycle to deposit the filament's evaporated tungsten back on the filament, rather than on the lamp bulb, and thus provides a longer lamp life. Incandescent lamps are used mainly for

Affordable Wire Management, Exhibit No. EX1010
Case No. IPR2024-00182
Page 86 of 201

aviation lighting. Tungsten-halogen lamps are often used for recreational floodlighting, where good color rendition is necessary.

b. Electric-discharge lamps. Electric (or gaseous discharge lamps) include mercury-vapor, metal-halide, and high- and low-pressure sodium lamps. They differ in the gas or vapor used, which is either mercury, or mercury with halide salts, or sodium, at different pressures. Most outdoor public way lighting installations today use high-pressure sodium lamps. Most older mercury vapor luminaires are being replaced with high-pressure sodium luminaires because of the energy savings. Metal-halide lamps may be used for recreational and protective lighting systems, because their superior color rendition outweighs their lower lamp life and lumen output. Low-pressure sodium lamps, though they have a greater lumen output, also have a monochromatic color rendition and a lower lamp life and are rarely used for outdoor lighting installations on military facilities. All lamps require ballasts for correct operation.

c. Fluorescent lamps. A fluorescent lamp utilizes a mercury vapor, but the inside of the bulb has a thin coating of phosphor which glows or fluoresces when struck by the electrons flowing through the mercury vapor. The amount of light emitted is less than for electric discharge lamps, and only a limited control is possible because of their tubular shape. They may be used for lighted roadway, traffic, or airfield indication signs. All lamps require ballasts for correct operation, and some types require separate starters to provide the heat necessary for the electron emission to start.

6-6. Luminaire components.

In addition to lamp or lamp/ballast combination, the components of a luminaire include its optical controls, its component support assembly, and possibly, circuit controls.

a. Optical controls. Optical controls are used to provide the light distribution pattern most appropriate to the outdoor lighting requirement. One type of control is a reflector which uses a parabolic, ellipsoidal, or hyperbolic contoured surface with a specular, spread, diffuse, or compound finish to redirect light from a lamp into the desired pattern. Another type of control is a refractor which uses a different medium to bend the light. Refractors can provide a variety of light distributions, using prismatic or lens type refractors of glass or plastic. Other optical control methods use glass or plastic materials to scatter light or control brightness. Louvers or shields are used to mask a source or to absorb unwanted light. Any degradation of these items resulting from accumulated dirt or fixture damage will result in a less efficient lighting installation.

b. Component support assembly. The assembly provides the mechanical support for lampholders, sockets, ballasts, controls, reflectors, refractors, enclosures, mounting components, and other items needed to ensure the lamp provides the performance needed.

c. Circuit controls. Photo cells are the only circuit controls that are provided integrally with the luminaire. They are described in paragraph 6-8.

6-7. Luminaire maintenance.

Luminaire maintenance given herein is for high-pressure sodium (HPS) lamps which will most often be found in roadway and recreational lighting. Maintenance of other lamps should follow the same philosophy. Luminaire maintenance consists of cleaning, lamp replacement, and troubleshooting of components when other problems are indicated.

a. Frequency. The design footcandle level is generally the average illumination delivered at the design point when the illuminating source is at its lowest output and the luminaire is in its dirtiest condition. This requirement determines the maintenance frequency.

(1) *Lamp depreciation.* The lumen output of HPS lamps will decrease to 80 percent of its initial value at about 80 percent of its rated life. The lamp should then be replaced to maintain design footcandle levels. Rated lamp life is defined as approximately the time for half of the lamps to fail. Using a value of 24,000 hours for 80 percent of lamp life, and 4,000 hours of burning time per year, results in a theoretical 6-year life for half the lamps. On this basis, consider group replacement every 4 years. Premature outages can probably be held to approximately 10 percent if group replacement is made before the lamps approach the accelerated point on their mortality curve. The few lamps which do fail should be replaced promptly.

(2) *Luminaire depreciation.* Dirt on lamps, reflectors, and refractors is another cause of decreased lumen output. A cleaning schedule should be set up on an annual basis, that under normal operating conditions, dirt will not contribute more than 15 percent to the lighting depreciation. Cleaning recommendations for average dirt conditions range from every 2 to 3 months up to a 2-year schedule for inspection, cleaning, and washing.

b. Cleaning. Cleaning can be done from lift trucks using a one- or two-man crew. The crew

Affordable Wire Management, Exhibit No. EX1010
Case No. IPR2024-00182
Page 87 of 201

should be familiar with the necessary cleaning steps and the appropriate cleaning compounds for the application.

(1) *Procedure.* The cleaning sequence will vary dependent upon the type of luminaire, but typical methods for streetlights can be modified for other types of fixtures.

(a) Remove any removable shielding material and the lamp.

(b) Make the luminaire shock-free. Ensure that the electrical circuit is turned off or make the luminaire shock-free by covering sockets with tape or dummy lamp bases.

(c) Clean the basic unit. If required, heavy deposits of dirt can be removed first from the luminaire's top surface by wiping or brushing. Reflective or refractive surfaces are better off not wiped but only washed.

(d) Clean the shielding material and lamps. Plastic materials should be allowed to drip dry after rinsing or be damp dried with toweling or some other material. Dry wiping can cause the formation of electrostatic charges. New lamps should be dry wiped before installation.

(e) Replacement may require installing new shielding and new lamps.

(2) *Cleaning compounds.* Washing solutions should always be in accordance with the luminaire manufacturer's instructions. Strong alkaline or abrasive cleaners should be avoided. Most luminaire finishes can be cleaned using the following procedures.

(a) *Aluminum.* Very mild soaps and cleaners can be used on aluminum and will not affect the finish, if the material is thoroughly rinsed with clean water immediately after cleaning. Strong alkaline cleaners should never be used.

(b) Porcelain enamel. This finish is not injured by nonabrasive cleaners. Detergents and most automobile and glass cleaners do a good job under average conditions.

(c) Synthetic enamel. Some strong cleaners may injure this finish, particularly if the enamel is left to soak in the solution. Alcohol or abrasive cleaners should not be used. Detergents produce no harmful effects.

(d) Glass. As with porcelain enamel, most nonabrasive cleaners can be used satisfactorily on glass. Dry cleaners are usually preferred on clear glass panels, but not on etched or sand blasted surfaces. Most detergents will work well under average conditions.

(e) Plastics. Dust is very often attracted by the static charge developed on plastic. Most common detergents do not provide a high degree of permanence in their anti-static protection. In most areas, however, if the plastic is cleaned at least twice a year with a detergent, a satisfactory balance in regard to static dirt collection is obtained.

c. Troubleshooting. The main defects requiring maintenance are nonstart, cycle on and off, extra bright light output, and low light output. Some of these conditions result from normal end of lamp or ballast life. Other conditions result from loose wiring, ballasts, or lamps, or from incorrect lamp and ballast installations. Refer to the manufacturers' lamp, ballast, and luminaire troubleshooting guides and the IESNA's Lighting Handbook for methods of diagnosing and correcting problems. Ballast replacement and voltage and current measurements present the possibility of exposure to potentially hazardous voltages and should be performed only by qualified personnel.

d. Replacement. Consider replacing glass items with tougher materials such as acrylics if breakage (vandalism) becomes a problem. Replace incandescent lamps with discharge lamps (sodium preferred) whenever possible. Departmental policy should be complied with in changing lamp types.

6-8. Multiple type lighting controls.

Most control is provided by either a central control or an integral control. Central controls use a time switch with an astronomical dial, or a contactor controlled by a photo cell. Integral systems have a photo cell installed on each luminaire.

a. Time switches. Time switches used on lighting circuits should have an astronomical dial, which ideally has been adjusted at the factory for the particular locality in which it is used. If it is necessary to do so in the field, adjust as follows:

(1) See that the center dial screw is tight (finger-tight on models with knurled knobs).

(2) Turn the dial either by the manual reset knob or by the dial screws in the direction indicated by the arrow until the correct time of day is directly under the hour pointer. The black half-moon represents night periods.

(3) Turn the star wheel in either direction until the date pointer is directly over the correct day and month. On models that do not have every day indicated, 5- or 10-day periods are shown and the exact date may be obtained by turning the star wheel one point for each day from the known data points. Spring-driven mechanisms may gain or lose time because of temperature variations. Synchronous motor-driven clocks will lose time if there is an interruption to service. They should be checked monthly and reset and adjusted if necessary. The contacts should be checked about once a year. On clocks having contacts on the back of the panel, disconnect the 120-volt wires from the terminal

Affordable Wire Management, Exhibit No. EX1010
Case No. IPR2024-00182
Page 88 of 201

block and remove the panel. Contacts should be inspected and replaced if badly pitted. On contacts, other than silver-plated ones, a coating of nonoxide grease is desirable. When grease cups are provided for the front and rear motor bearings, the grease cups should be given a half turn every 3 months. The manufacturer's recommended grease should be used for refilling. The clock mechanism should be overhauled every 5 years by the manufacturer or a competent watchmaker.

b. Contactors. Contactors are described under chapter 11, section II.

c. Photo cells. Any dust or dirt on the windows of photo controls of any type will prevent proper operation. These windows must be kept clean.

(1) *Self-generating phototronic photo cell.* The self-generating phototronic cell has a normal clear day output of 1.5 to 6 milliamperes. It can operate the relay on 0.5 milliampere, so replacing the light collector is not necessary until its output tests below 0.5 milliampere. Any testing should be made on a cloudless day using a milliammeter with a range of 0 to 10 milliamperes. The check can be made most conveniently at the terminals on the relay box. When the output of the light collector tests less than 0.5 milliampere, it should be returned to the manufacturer for rehabilitation, or replaced with a photoconductive cell. The relay for a phototronic cell is very delicate because of the small amount of energy needed to operate it. Misoperation is most often the result of sticking contacts and damaged bearings. Sticking contacts should be carefully cleaned with crocus cloth. Damaged bearings are usually caused by severe continuous vibration or knocks. Any maintenance on the relay panel, other than the cleaning of contacts mentioned above, should be done by the manufacturer. Careful handling is essential.

(2) *Phototube photocell.* A periodic checkup should be made every 6 months. The windows should be cleaned and all tubes replaced. Replaced tubes should be checked by a competent tester and discarded if poor. Any extensive maintenance work should be considered justification for replacing with a solid-state type.

(3) *Solid-stat e photocell.* Failure of this type is denoted by lights being on during daylight. If cleaning the window does not correct the malfunction, the unit should be replaced. The high repair labor cost usually exceeds the replacement cost.

SECTION III--LIGHT DISTRIBUTION

6-9. Light distribution standards.

Industry standards regulate outdoor lighting design. Luminaires are designed to provide light distributions to meet the design standards by focusing the light into the patterns, beam spreads, or cutoffs as applicable.

6-10. Roadway lighting.

IESNA's Lighting Handbook lists five basic distributions. Figure 6-l and the distribution discussions following have been provided to simplify IESNA definitions. While many luminaires can be adjusted to produce more than one pattern, no luminaire is suitable for all patterns. Care must be used, especially in repair and replacement, to install the proper luminaire for the designed pattern, as specified in manufacturer's literature. Even when the proper luminaire is installed, care must be used to ensure all adjustments have been properly made to produce the desired results.

a. Type I. The distribution of *(a)* is intended for narrow roadways with a width about equal to lamp mounting height. The lamp should be near the center of the street. The variation of *(b)* is suitable for intersections of two such roadways with the lamp at the approximate center.

b. Type II. The distribution of (c) produces more spread than does type I. It is intended for roadways with a width of about 1.6 times the lamp mounting height, with the lamp located near one side. The variation of *(d)* is suitable for intersections of two such roadways, with the lamp not near the center of the intersection.

c. Type III. The distribution of (e) is intended for luminaires located near the side of the roadway with a width of not over 2.7 times the mounting height.

d. Type IV. The distribution of (f) is intended for side-of-road mounting on a roadway with a width up to 3.7 times the mounting height.

e. Type V. The distribution of (g) is circular and is suitable for areas and wide roadway intersections. Types III and IV can be staggered on opposite sides of the roadway for better uniformity in lighting level, or for use on wider roadways.

6-11. Floodlighting.

Floodlighting is used for recreational lighting and for area lighting. Floodlighting is defined by the NEMA field angle as indicated in table 6-l with projection distance given in feet (ft) and meters (m).

Affordable Wire Management, Exhibit No. EX1010
Case No. IPR2024-00182
Page 89 of 201

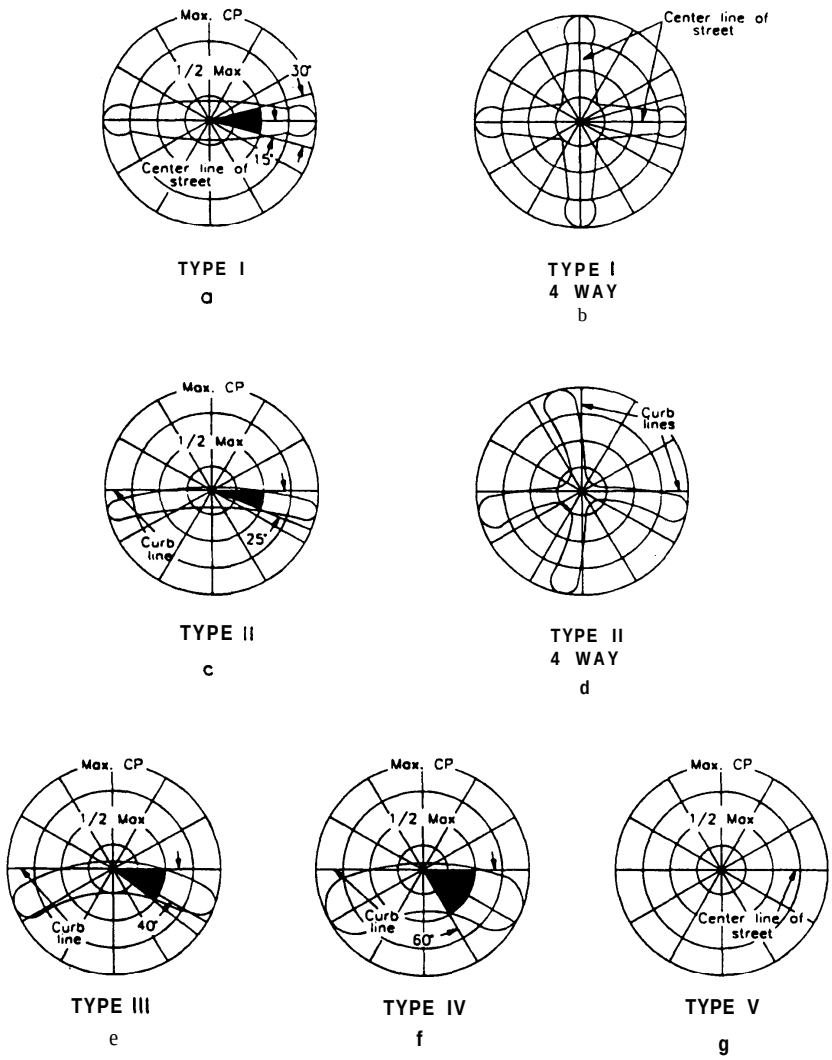

Figure 6-l. Light distribution patterns for roadway lighting

Table 6-l. Floodlight beam descriptions[1]

Beam type	Beam spread degrees range	Projection distance
1	10 to *18*.	*240* ft and greater (73 m and greater)
2	*18* up to 29. ...	200 to 240 ft (61 to 73 m)
3	29 up to 46. ...	175 to 200 ft (53 to 61 m)
4	46 up to 70. ...	145 to 175 ft (44 to 53 m)
5	7oup to 100...	105 to 145 ft (32 to 44 m)
6	100 up to 130. .	80 to 105 ft (24 to 32 m)
7	130 and up	Under 80 ft (under 24 m)

[1]This table is reproduced by permission from IESNA Lighting Handbook, References and Application, Eighth Edition, 1993.

6-12. Airfield lighting.

Airfield lighting fixtures are covered by the Federal Aviation Administration's (FAA) advisory circulars. For many items there will be two or more specifications for qualified equipment which may not be identical in form, fit, and function. Care must be used in repair and replacement to install fixtures whose performance characteristics are compatible with the existing fixtures, particularly with respect to light output and aiming. Both the military and the FAA maintain qualified products listing (QPL) in the DOD Index of Specifications and Standards and the FAA checklist AC-00-2.8.

Affordable Wire Management, Exhibit No. EX1010
Case No. IPR2024-00182
Page 90 of 201

Section IV-SERIES TYPE AIRFIELD LIGHTING

6-13. Series type lighting system components.

A series-type lighting system for airfield lighting includes luminaires, mounting structures for the luminaires, the control system to switch luminaires on and off and the power system which provides the constant-current to operate the luminaires. Luminaires provide light distribution applicable to the type of airfield lighting involved. In general, series type streetlighting systems should be phased out in accordance with departmental policy.

6-14. Series type lighting controls and protection.

Low-voltage airfield lighting controls includes power sources, control panels, relay equipment, accessories, and circuits. Controls energize, de-energize, and select lamp brightness in accordance with operational requirements. Control will normally be provided only at the control tower and the airfield lighting vault. Medium-voltage controls, utilize the following devices.

a. Protective *relays.* Protective relays open the primary feed of constant-current regulators in case of an open circuit in the series lighting circuit.

b. Primary switches. A primary oil switch is usually a single-pole, solenoid-operated oil switch. Air switches, provided as an integral part of dry-type constant-current transformers, are also available.

c. Series plug cutouts. Cutouts are plug-type units used to disconnect a series light circuit or its constant current regulator. With the plug handle assembly removed and secured, maintenance personnel are ensured of protection.

d. Film cutouts. Film cutouts or film disks operate automatically and are inserted in older lamp sockets to bypass failed lamps. Some circuits that have more than one lamp on an insulating transformer will use film cutouts to bypass a burned-out lamp and keep the other lamps supplied from that transformer operating. Because of their size and shape, they are sometimes referred to as "dimes." When current no longer flows because of lamp failure or removal, full circuit voltage exists across the cutout film, which then ruptures, allowing the series circuit to be completed. A new film cutout of proper rating must be used whenever a faulty lamp is replaced. It is good practice to replace the cutouts whenever lamps are replaced under a group replacement program. Always screw the lamp into the socket before inserting the socket into the receptacle. If the socket is replaced before putting the lamp in it, the film cutout will puncture. Never re-use a punctured film disk. Paper, cardboard, or other insulation should never be used as a substitute for the film cutout.

6-15. Series type lighting power supply equipment.

The main item of power supply equipment is the constant-current transformer to supply the series circuit power. The other item is the insulating transformer, whose main purpose is to isolate each luminaire to prevent an open circuit when a lamp burns out.

a. Constant-current transformers. The transformer (usually called a regulator) has a movable secondary winding that automatically changes position to provide a constant-current output for any varying load impedance, within its rating, when supplied from an approximately constant-voltage source. The balance point between coil weight and magnetic force may be adjusted to provide the desired output current. Most existing constant-current transformers are oil-insulated; but dry type units, which are not much larger, are available and should be considered for replacement of failed oil-insulated units whenever possible.

(1) *Loading.* Constant-current regulators should be loaded as near to 100 percent as possible. It is generally accepted that overheating will not be caused by any load between 50 percent and 100 percent of rated kW. Regulators, unlike transformers, are rated in kW, not kVA.

(2) *Operation.* A constant-current regulator must never be operated with an open-circuit secondary. However, a short circuit, even a bolted short, on a secondary will have no immediate adverse effects if a reasonable percentage of the load remains energized.

b. Insulating transformers. Insulating transformers isolate the medium-voltage of a series circuit from the wiring and fixtures. In addition, they are sometimes used to obtain higher or lower current for lamps having a different ampere rating, or constant voltage for multiple lamps connected to a series circuit. They are sometimes referred to as isolating transformers. Unless the case and one secondary conductor are grounded, the secondary must be treated as a medium-voltage circuit:

Affordable Wire Management, Exhibit No. EX1010
Case No. IPR2024-00182
Page 91 of 201

6-16. Maintenance and troubleshooting series type lighting.

Use the recommended guidelines for the maintenance of airport visual aid facilities given in FAA AC 150/5340-26 which covers the various types of lighting systems, the airfield lighting vault equipment, and associated control tower equipment. It also includes troubleshooting procedures for series lighting circuits.

Affordable Wire Management, Exhibit No. EX1010
Case No. IPR2024-00182
Page 92 of 201

CHAPTER 7

TRANSFORMERS AND REGULATORS

Section I-CONSIDERATIONS

7-1. Voltage provisions covered.

This chapter provides maintenance and repair requirements for transformers used in the transmission and distribution of electrical energy and for voltage regulators. Requirements apply to units having at least one medium-voltage winding and generally providing three-phase service, although single-phase units may be found for housing or other small loads.

7-2. Defining transformer and regulator characteristics.

A transformer utilizes electromagnetic induction between circuits of the same frequency, usually with changed values of voltage and current. All transformers covered in this chapter are constant-voltage type. That is, they maintain an approximately constant voltage ratio over loads from zero to the rated output. Constant-current transformers are described in chapter 6, section IV Transformers can be classified in various ways, but their basic construction consists of windings, magnetic cores on which windings are coiled, insulation, and any special connections applying to the type of load.

a. Winding terminology. Winding terminology given below is based on the voltage flow, rating, or winding provisions.

(1) A primary winding has input from the power source and a secondary winding supplies input to the loads.

(2) A high-tension winding has a higher voltage than a low-tension winding. Most transformers have high-tension primary windings and are therefore step-down transformers. If the same transformer utilized the low-tension winding as the primary winding it would be a step-up transformer.

(3) Most transformers have two windings, which are electrically insulated from each other. High-voltage power transformers found in transmission-to-distribution substations may have a single winding (autotransformers) or a tertiary winding to eliminate voltage problems and/or to supply a second load voltage economically.

b. Regulation. Transformers can maintain an acceptable voltage ratio of about a 2 percent voltage drop from zero to rated output in most cases. Most distribution transformers and smaller power transformers have tapped windings, which permit adjusting the output voltage to broaden the range of primary voltage inputs. The transformer will have a manual tap changer, which can be operated if the transformer is de-energized. However, on substations which serve varying loads, such as pumping facilities, or on large installations with long primary feeder lines, taps may not provide sufficient voltage regulation and other means are necessary.

(1) *Load-tap-changing (LTC).* This feature installed on a transformer provides automatic tap changing under load, and normally varies the voltage to plus or minus 10 percent of the system's rated voltage by changing tap connections using a motor-driven, tap-changing switch.

(2) Voltage regulators. Sometimes voltage regulation is needed and the system transformers do not include the LTC feature. Voltage regulators are used to supply the control for the variations in load. A voltage regulator needs similar servicing to that required for a power transformer. A step-voltage regulator operates on the same principal as the LTC mechanism. An induction voltage regulator has a series winding and a shunt winding, and uses a motor to rotate the shunt winding to either add to (boost) or subtract from (buck) the series winding voltage. The action provided is dependent upon the voltage induced in the series winding and the respective polarities of each winding (that is, the respective instantaneous directions of currents entering the primary and leaving the secondary terminals during most of each half cycle). The switching mechanism in most new voltage regulators is practically maintenance free, but many of the older units require considerable servicing. The manufacturer's recommendations should be followed for all maintenance and servicing requirements.

7-3. Transformer classification.

Transformers are generally classified by size, insulation, and location.

a. Size. Transformers rated above 500 kVA are classed as power transformers. Transformers rated at 500 kVA or less are classed as distribution transformers, as they usually have low-tension windings of less than 600 volts. Instrument transformers, covered in chapter 3, section VI, are not considered distribution transformers since they do not serve utilization loads.

b. Insulation. There are two types of insulating classifications recognized by ANSI/IEEE C57.12.80.

Affordable Wire Management, Exhibit No. EX1010
Case No. IPR2024-00182
Page 93 of 201

Insulation classifications are affected by the insulation's temperature rating and by the method of cooling needed to remove the heat from the transformer.

(1) *Liquid-immersed transformers.* The core and the coils are immersed in an insulating liquid. A flammable mineral oii insulation is the most frequently used liquid. Various less flammable liquids are used to meet NEC code requirements. Only flammable and less flammable liquids are acceptable on military installations. Nonflammable-insulated liquids, though available, are not considered environmentally acceptable. Polychlorinated biphenyl (PCB) insulated transformers should have been removed to meet OSHA requirements. Replacement of liquid-filled transformers in or near buildings must take into account the latest applicable NEC code restrictions, which might require an existing installation to be modified or a different type of insulation to be provided.

(2) *Dry-type transformers.* The core and coil are in a gaseous or dry-compound insulating material.

c. Cooling classes. Distribution and small power transformers are generally self-cooled. Other methods of cooling may be added to provide a greater load capacity than would be available with a self-cooled unit. Cooling methods include forced air-cooling (fans) for liquid-immersed and dry-type units; and forced air-cooling and/or forced liquid-cooling for liquid-immersed transformers. Dry-type units can be ventilated, nonventilated, or sealed. Transformers may be provided with the cooling equipment, may have provisions for adding cooling equipment, or may be without future capability for adding cooling equipment.

d. Insulation temperature ranges. Transformers are designed to carry their normal rated load in specific ambient temperatures with a maximum stated temperature rise for normal life. If ambients or temperature rises are exceeded under operating conditions, the transformer life may be decreased. If lower temperatures occur, the transformer life may actually be increased. Overload capabilities of transformers are indicated in ANSI/IEEE C57.91, ANSI/IEEE C57.92, and ANSI/IEEE C57.96.

(1) *Ambient temperatures.* The ambient temperature for an air-cooled unit should not exceed 40 degrees C; and the average temperature for any 24-hour period should not exceed 30 degrees C; with a minimum ambient temperature for dry-type units of not less than minus 30 degree C. These restrictions apply if the transformer is to provide its normal life expectancy.

(2) *Insulation temperature ratings.* Liquid-immersed transformers are rated 65 degree C rise or 55/65 degree C rise. Dry-type transformers are rated 150 degree C rise, 115/150 degree *C* rise, or 80/115 degree C rise. The lower the temperature rise the lower the rated full-load capacity.

(3) *Altitude.* The dielectric strength of transformers, which depend in whole or in part upon air for insulation, decreases as the altitude increases due to the effect of decreased air density. This applies to liquid-immersed transformers as well as dry-type transformers.

e. Location. Transformers can be classified by their location, but only those which are most often installed on military facilities are covered below.

(1) *Outdoor transformer.* This is a transformer of weather-resistant construction, suitable for service without additional protection from the weather. Industry standards also classify transformers as indoor units, which must be protected from the weather.

(2) *Pole-type transformer.* An outdoor transformer which is suitable for mounting on a pole or a similar structure.

(3) *Pad-mounted transformer.* This is a unitized or compartmental-type transformer, with enclosed compartments for medium-voltage and low-voltage cables entering from below, and is mounted on a pad. The terminology is confusing, and it is recommended that this type of unit be called a pad-mounted compartmental-type transformer.

(4) *Station-type transformer.* A unit designed for mounting on a pad and installed in a substation, more often referred to as a substation type.

(5) *Unit substation transformer.* A unit which is mechanically and electrically connected to, and coordinated in design with, one or more primary or secondary switchgear lineups or a motor-control center. A primary unit substation has a medium-voltage secondary. A secondary unit substation has a low-voltage secondary.

(6) *Other types.* These include submersible, subway, vault-type, network, sub-surface, and direct-buried units.

Section II-MAINTENANCE

7-4. Transformer inspection and maintenance frequencies.

Transformers are simple rugged devices which will give many years of trouble-free operation if provided with periodic inspections and maintenance. Inspections of transformers should be made regularly and permanent records kept of all observations and tests for both scheduled and unscheduled inspections. The frequency of inspection should be based on the importance of the transformer, the operating environment, and the severity of the loading conditions. In addition to the inspection recom-

Affordable Wire Management, Exhibit No. EX1010
Case No. IPR2024-00182
Page 94 of 201

mendations listed herein, it is good practice to develop a habit of visual inspection whenever a transformer area is visited. In this way leaks, cracked insulators, loose connections, and similar problems may be noticed before serious problems develop that might affect the continuity of service. When working around a transformer, particular care must be taken in handling all tools and other loose articles, since material dropped into the windings and allowed to remain can cause a breakdown.

a. Power transformers. For maintenance purposes consider the impact that the loss of a power transformer will have on the facilities operation. Utility-facility interconnection transformers and transformers with medium-voltage secondary lines can be defined as significant impact transformers, while other power transformers can be considered as less significant impact transformers. There may be slightly different maintenance techniques for liquid and dry-type transformers, but the general approach is the same.

(1) *Significant impact transformers.* Table 7-l is a recommended inspection and maintenance checklist based on input from NFPA, NETA, and manufacturer's published guides. For transformers having a less significant impact, checking should be decreased as covered later.

(2) *Less significant impact transformers.* Transformer readings should include load current at peak load, voltage readings during both peak-load and low-load periods, temperature, liquid level, and pressure/vacuum recordings. These readings should be taken not less than every 6 months along with general inspection tests from table 7-l that are not annual or 3-to-6 year tests. Other tests of table 7-l may be needed dependent upon the results of the 6-months' tests.

b. Distribution transformers. Porcelain bushings should be kept clean and the transformers inspected annually. Check for broken porcelain, loose power connections, blown fuses, and defective surge arresters. Check for leaks, hardened bushing gaskets, corroded or broken ground connections, rusting of tanks, and signs of corrosion on terminals, bushing studs, and connectors. If the transformer is excessively noisy or has a ruptured gasket, then the unit should be opened, internally inspected, and tested.

(1) *Load test.* A load test should be made annually on transformers which supply a load that is known to be increasing. Transformers which supply a steady connected load should be load tested every 5 years. Load tests should be made with portable ammeters (dial-indicating or recording-chart type), installed for at least 24 hours on a peak loading period day as determined by spot checking with a clamp-on ammeter. Reasonable accuracy and complete safety should be of the greatest importance in making transformer load surveys. Readings should be taken on the secondary side of the transformer whenever possible. Testing all transformers may not be necessary, because similar areas and buildings may have quite similar loads.

Table 7-l. Transformer inspection and maintenance checklist

General inspection items	Frequency
Load current	Weekly or monthly
Voltage	Weekly or monthly
Temperature	Weekly or monthly
Liquid level or pressure vacuum	Weekly or monthly
Protective devices	Annually
Protective alarms	Monthly
Ground connections	Every 6 months
Surge arresters	Every 6 months
Pressure-relief devices	Every 3 months
Breather	Monthly
Auxiliary equipment and bushings	Annually
Load tap changer (LTC)	Annually
External inspection	Every 6 months
Internal Inspection	From 3 to 6 years
Solid insulation (winding)	
Insulation resistance	Annually
Polarization index (PI)	Annually
Power factor	From 3 to 6 years
Hi-pot (ac or dc)	From 3 to 6 years
Induced potential	From 3 to 6 years
Transformer turns ratio	Annually
Insulating liquid	
Gas analysis	Annually
Dielectric strength	Annually
Color	Annually
Acidity (neutralization number)	Annually
Interfacial tension (IFT)	From 3 to 6 years
General inspection items	Frequency
Power factor test	From 3 to 6 years

(2) *Dielectric tests.* Dielectric tests of liquid-immersed transformers need not be made on distribution transformers of less than l00-kVA capacity. Liquid samples should be taken at 5-year intervals from each liquid-immersed distribution transformer of 100-kVA and greater capacity. These samples should be given a dielectric test. If a liquid-immersed transformer has been out of service for one year or more, dielectrically test a liquid sample from that unit before re-energizing the transformer. When a liquid sample fails to meet the dielectric standard, filter the liquid until it meets the standard or replace with new liquid of a type and grade recommended by the transformer manufacturer.

7-5. Transformer inspections.

Inspection and repair will vary dependent upon the type of transformer installed. Always expand or

Affordable Wire Management, Exhibit No. EX1010
Case No. IPR2024-00182
Page 95 of 201

modify these general directions in accordance with the manufacturer's recommendations.

a. Readings. Current, voltage, and temperature readings should be taken at the peak load time. Voltage and liquid level readings should be taken at the end of a low load period.

(1) *Current.* Load currents are a very important part of recommended regular inspections. If the observed current in any phase exceeds the rated full load value, and the rated maximum temperature is exceeded, steps should be taken to reduce the load. Trends in load currents should be noted for programming additional transformer capacity or consolidation of loads on lightly loaded transformers.

(2) *Voltage.* Overvoltages and undervoltages can be detrimental to the transformer and the load it serves. Investigate immediately and take corrective action to bring the voltage within acceptable limits.

(3) *Temperature.* Use integral unit-mounted temperature gauges and maximum temperature indicators, where available. Record readings, and reset the maximum temperature indicator. Excessive temperature can indicate an overload interference with the normal means of cooling. Prolonged operation at an overtemperature will accelerate liquid deterioration; result in a reduced life expectancy of the solid insulation; and may greatly increase the risk of failure. Constant monitoring against overtemperature is often provided by special alarm contacts on a transformer's temperature gauge.

(4) *Liquid level.* Check regularly, and especially after a long low-load period with a low ambient temperature, as this is when the liquid level should be at its lowest point. Liquid must be added before the level falls below the sight glass or bottom reading of the liquid-level indicator. If there is no liquid-level indicator, de-energize the transformer and check the liquid level by removing the inspection plate on the top of the transformer, or by removing the top if no inspection plate is available.

(5) *Pressure / vacuum.* Pressure/vacuum gauges are commonly found on sealed-type transformers. They indicate the integrity of the sealed construction and should be added to transformers without them, if feasible. The readings should be compared to the recommendations of the manufacturer pertaining to normal operating ranges. High pressures indicate an overload or internal trouble and a sustained zero pressure reading indicates a leak or a defective gauge.

(6) *Miscellaneous.* The features of special types of transformer construction that should be included in regular inspections include:

(a) The water-in and water-out temperatures of water-cooled transformers.

(b) The oil-in and oil-out temperatures of forced-oil-cooled transformers with oil-to-air or oil-to-water heat exchangers.

(c) The pressure in the nitrogen cylinder for a transformer equipped with an automatic gas-pressure system. If the pressure drops below the manufacturer's recommended value, the cylinder should be replaced and leaks repaired.

(d) Dehydrating breathers should be checked to ensure that they are free from restriction and have not absorbed excessive moisture.

(e) For dry-type transformers, the operation of integral ventilating fans should be checked. If installed indoors, the temperature of the room should be measured regularly and recorded. Proper ventilation is essential, and any material or obstruction that might prevent the free circulation of air around a transformer should be removed. If the room has power-driven ventilating fans, their correct operation should be determined. Overtemperature alarms, if provided, should be tested. Excessive air velocity can be as damaging as no circulation at all.

b. Inspections and repairs. The inspection and repair recommendations given are general in nature. For specific directions, the manufacturer's recommendations should be followed.

(1) *Protective devices.* Basic transformer protection is required by the NEC and is often supplemented with additional protective relays and devices. Inspect and maintain these devices on a regular basis to ensure that they will operate in case of failure. Provide an annual maintenance check for sudden pressure relays, undervoltage and overvoltage relays, alarm and auxiliary relays, and wiring and instrument transformers associated with the protective relays.

(2) *Protective alarms.* Transformers come with various types of alarms, such as overtemperature, liquid temperature, and pressure-relief devices. These devices usually have open-type contacts connected to either alarm or to trip the protective circuit breaker. Because of their importance, check alarm contacts and associated wiring on a monthly basis.

(3) *Ground connections.* A transformer tank is normally provided with a ground connection to eliminate electric shock (however, at least one state's safety orders do not permit pole-mounted transformers to have grounded tanks). The ground resistance of a substation may vary from less than 1 ohm for very large capacity substations, to 25 ohms

for very small capacity substations. The importance of the substation determines the need for ground resistance tests.

(4) *Surge arresters.* Surge arresters are used to protect aerially supplied transformers from lightning and other surges. They should be inspected for looseness, broken parts, dirt, and other deposits. Clean, tighten, and replace parts as necessary annually.

(5) *Pressure-relief devices:* Most transformers are equipped with pressure-relief devices to relieve excessive pressure in the tank due to internal arcing. This device is set to open at a pressure of 10 to 15 pounds per square inch (69 to 103 kilopascals). A quarterly inspection of pressure-relief devices should include checking for leaks around joints, diaphragm cracking, and the like. A cracked or leaking diaphragm should be replaced at once.

(6) *Breathers.* Many large transformers have breathers of either the open type or dehydrating type. The function of the dehydrating agent is to prevent moisture from entering the transformer tank. Most dehydrating breathers contain silica gel, which will change from blue, when dry, to pale pink when wet. Inspection can be made through a glass window provided for that purpose. The breathers should be checked monthly and the dehydrating agent should be replaced or reconditioned if it is found they restrict breathing or are wet.

(7) *Auxiliary equipment.* Auxiliary equipment required for cooling, such as fans, oil pumps, control devices, and wiring, should be checked on an annual basis. The equipment should be cleaned and damaged parts replaced.

(8) *Load tap changers.* Load 'tap changers should be thoroughly inspected and the insulating oil tested at the end of the first year's operation. Subsequent annual inspections should include testing of the insulating oil based on the number of operations, the condition of the oil, and the condition of the contacts. Maintenance of the mechanism will vary with the type and manufacturer. The manufacturer's recommendations should be followed.

(9) *Visual inspection safety measures.* If a transformer is given an external visual examination, the case of the transformer should be regarded as energized until the tank ground connection is inspected and found to be adequate. If any procedure more extensive than an external visual examination is to be performed, de-energize the transformer, using an approved positive lockout or tagout procedure to ensure against an unplanned reenergization and resulting hazard to personnel or equipment. Before doing anything else, test to ensure that the equipment is de-energized, and ground the equipment prior to the start of any work.

(10) *External inspection.* Provide an external inspection on a semi-annual basis. Check the tank, radiators, the tap changer, and all gasketed or other openings for leaks, deposits of dirt, or corrosion. Inspect connections for signs of overheating and corrosion. Inspect bushing insulating surfaces for tracking, cracks, or chipped skirts. Inspect bushing gasketed bases for leaks. Leak repair, cleaning, and painting should be done as required. See chapter 3, section VII for bushing maintenance. Check louvers in the enclosures of ventilated dry-type transformers for clogging by dirt or other obstructions. A high noise level or change in the noise level could indicate improper installation, loose windings, or misaligned barriers.

(11) *Internal inspection of liquid-immersed transformers.* On an open-type liquid- immersed transformer, the look-in port cover can be removed to examine for evidence of moisture or rust around the bushing supports and transformer top cover. To examine the tank and core, the liquid can be drained out. Examination of the core should be made to check for sludge deposits, loose connections, and any damage to the transformer parts. Evidence of carbon may indicate internal problems. Windings should be checked for damage to terminal panels, barriers, and loose connections. The need to untank a transformer for internal inspection should depend on the age of the transformer and its overloading and/or trouble history. The frequency of this inspection should be 5 to 10 years or more.

(a) Contamination. Contamination or impairment of the insulating liquid during examination should be carefully avoided. If the humidity is high, exposure should be avoided entirely, unless the work is absolutely necessary and cannot be postponed, in which case special humidity-control steps should be taken.

(b) Liquid addition. If liquid is to be added, it should be given a dielectric-breakdown test. The liquid to be added should be at least as warm as the liquid in the transformers. If a large amount of liquid is added, the transformer should remain de-energized for 12 hours or more to permit the escape of entrapped air bubbles. A desirable method is to add the liquid with the transformer tank under a vacuum. (Check the manufacturer's instructions and IEEE C57.106 for further information.)

(12) *Internal inspection of dry-type transformers.* Enclosure covers of ventilated dry-type transformers should be removed carefully. Check for accumulations of dirt on windings and insulators, restriction to cooling airflow, discoloration caused

Affordable Wire Management, Exhibit No. EX1010
Case No. IPR2024-00182
Page 97 of 201

by overheating, and tracking and carbonization. Look for cracked or chipped insulators; loose insulators, clamps, or coil spacers; deterioration of barriers; and corroded or loose electrical connections.

(13) *Cleaning and other dry-type transformer requirements.* Dirt and dust should be removed from the windings with a vacuum cleaner. Compressed air may be used after vacuuming, but only if it is clean and dry and applied at a low pressure to avoid damage to windings. In particular, ventilating ducts and the top and bottom of the windings should be cleaned. The use of liquid cleaners should be employed only when it is known that they will not have a deteriorating effect on the insulation.

(a) Operation. Best service life will result if the windings are maintained above the ambient temperature level. For this reason, transformers operating in high humidity should be kept energized, if feasible. If a transformer is to be de-energized long enough for it to cool, special drying procedures may be required before the transformer is re-energized. Refer to the manufacturer's recommendations for drying procedures to be followed.

(b) Sealing. Sealing severe leaks, or opening and resealing the tanks of sealed dry-type transformers, requires special procedures and equipment. The manufacturer of the transformer, an experienced transformer repair facility, or a qualified electrical maintenance contractor should perform this work.

(c) Special procedures. In addition, special procedures covering drying out of the windings, and purging and refilling of the tank, may be required.

7-6. Transformer testing guidance.

All tests should meet the requirements of ANSI/IEEE CF57.12.90 for liquid-immersed transformers and IEEE (X7.12.91 for dry-type transformers. Expanded explanatory data for tests can also be found in NFPA 70B and "Electrical Equipment Testing and Maintenance."

7-7. Solid (winding) insulation tests.

Nondestructive tests for the dielectric properties of solid insulation include the insulation resistance test, the dielectric-absorption test, and the power factor test. High potential and induced potential tests can cause damage to the insulation. However, these tests do discover weakened insulation, and any damage is usually much less than that caused by an in-service failure. Insulation tests can be applied to dry-type transformers; however, the voltage impulse values should be lower than those used for liquid-immersed transformers. A transformer turns ratio test can identify trouble in transformer windings; its use in proof testing is generally limited to dry-type units.

a. Insulation resistance test. Routine insulation resistance tests on transformers are normally made at voltages given in table 3-4. Insulation resistance usually decreases somewhat with an increase in applied voltage. However, for a variation of two to one or three to one in the usual test voltage ranges, there is no appreciable effect on insulation resistance for equipment that is in good condition. Marked variations in insulation resistance for different values of voltage are usually due to the effects of dirt or moisture. The insulation resistance values for oil-filled transformers will vary due to humidity, size and type of transformer, temperature, and the value the test voltage applied.

(1) *Records.* A record should be made of all factors for comparison with previous and future test results. Temperature correction factors are indicated in table 7-2. To obtain the equivalent insulation resistance at 20 degrees C, multiply the insulation resistance reading in megohms by the appropriate correction factor. Values of winding insulation resistance may be affected by residual charges that are retained in the winding. For this reason, windings should be discharged to the frame until the discharge current reaches a negligible value. Ten minutes or more may be required to complete the discharge.

(2) *Insulation testers.* Resistance testers are available that indicate directly in ohms the resistance being measured. The power source necessary for operation of the tester may be a hand cranked generator, motor operated generator, or rectifier supplying a direct-current voltage for test purposes. For best results, the detailed instructions furnished with each of these instruments should be followed.

Table 7-2. Insulation resistance conversion factors to 20°C

Temperature	Transformer	
(°C)	Oil	Dry
0	0.25	0.40
5	0.36	0.45
10	0.50	0.50
15	0.75	0.75
20	1.00	1.00
25	1.40	1.30
30	1.98	1.60
35	2.80	2.05
40	3.95	2.50
45	5.60	3.25
50	7.85	4.00
55	11.20	5.20
60	15.85	6.40
65	22.40	8.70
70	31.75	10.00
75	44.70	13.00
80	63.50	16.00

Affordable Wire Management, Exhibit No. EX1010
Case No. IPR2024-00182
Page 98 of 201

(3) *Test voltage. An* insulation test is not intended to be a destructive test. The test voltage used must be restricted to a value commensurate with apparatus voltage rating and condition of insulation being tested. This is particularly important in the case of small, low-voltage transformers or those units containing an excessive amount of moisture.

b. Polarization index (PI) test. A PI test or dielectric absorption test is a continuation of the insulation resistance test in which the voltage is applied for a longer period of time. For good insulation, the resistance values will increase with time. The polarization index is the ratio of the lo-minute to the l-minute readings. An index below 1 indicates poor insulation. An index between 1 and 2 indicates that the insulation is questionable. An index of a 2 and higher indicates good insulation.

c. Power factor test. The power factor of an insulation is a measure of the energy components of the charging current. The test indicates the power loss caused by leakage current through the insulation. The equipment to be tested should be disconnected and all bushings should be cleaned and dried. The test should be conducted when the relative humidity is below 70 percent and the temperature is above 32 degrees F (0 degrees C). On transformer tests, the power factor of each winding with respect to ground, and each winding with respect to its other winding, should be measured. Evaluation of the data obtained should be based on comparison of data with any previous tests on the same transformer or on test data from similar units.

d. High-potential test. A high potential test is a voltage applied across an insulation, at or above the direct-current equivalent of the 60-hertz operating crest voltage. The maximum direct-current test voltage for periodic testing between windings, and from winding to ground, should not exceed the original factory alternating-current test voltage. Good insulation will exhibit a gradually rising leakage current with an increase in test voltage. If the leakage current increases rapidly, the test should be halted because a breakdown of the insulation is indicated.

7-8. Transformer insulating liquids.

The insulating liquids used in liquid-immersed transformers not only provide insulation, but serve to transfer heat from the windings. The liquid must be kept free of contaminants and moisture, just as the air insulation of dry-type transformers must be kept clean and dry; otherwise, the medium's insulating ability is reduced.

a. Types of liquid. The insulation liquids used by most facilities will be mineral oil, in oil-insulated transformers, and fire-resistant petroleum (RTemp) or silicone fluids in less-flammable liquid-insulated transformers. Askarel or PCB units should have been removed, or be in the process of being removed, from most installations. Tetrachloroethylene (Wecosol) fluid used in nonflammable fluid-insulated transformers, can evaporate to produce toxic fluids and its use should not be an allowable option in facility design manuals/specifications.

b. Air and moisture are the major enemies of insulating liquids. The oxygen in the air will cause the formation of acids and sludge in the oil. Moisture, in as small an amount as 10 parts per million by volume, can reduce the dielectric strength of insulating oil to below its acceptable value. All containers and equipment used for handling insulating liquids must be clean. Equipment used with mineral oil should never be used with less-flammable liquids, as any mineral oil residue will change the less-flammable liquid's fire-point characteristics. Transformers should not be retrofilled with a different type of insulating liquid, as this can cause the transformer to malfunction. Likewise, great care must be used to ensure that any liquid used to "top off" a transformer is compatible in all respects with the liquid already in it. The best practice is to consult the transformer manufacturer or the manufacturer of the liquid intended to be used for topping off. In the following paragraphs, where no values are given, consult the manufacturer.

c. Sampling. Samples should never be taken from energized transformers, except by means of an external sampling valve. If the transformer has no external sampling valve, the unit must first be de-energized and a sample taken internally,

(1) *Obtaining the Liquid.* The methods of obtaining liquid samples are covered in ASTM D 923. Oil samples should be taken from the bottom of the transformer, while less-flammable liquid samples should be taken from the top. The samples should stand in tightly sealed containers for 24 hours prior to testing.

(2) *Sampling considerations.* The test validity is dependent upon the validity of the sample. Use clean, dry, glass containers with nonrubber wax-sealed stoppers to prevent leakage. Take samples when the oil is at least as warm or warmer than the surrounding air, and always on a clear windless day when the relative humidity does not exceed 70 percent. Run about one quart (one liter) of liquid through any supply valve to clean it thoroughly. Vent any sealed transformer which has a vacuum. Place the sample in a refrigerator's freezing compartment overnight. A cloudy sample indicates free water and another sample should be taken to determine whether the water was in the sample container or in the oil.

d. Type of tests. Annual, comprehensive, and dissolved oil-in-gas tests are made on liquid insulation. ANSI/IEEE C57.106 and ASTM D 117 cover acceptance, maintenance, and test requirements.

(1) *Annual tests.* Annual tests determine whether the insulating liquid is in satisfactory condition or whether more comprehensive tests should be made.

(a) Dielectric breakdown. The dielectric breakdown voltage test is covered in ASTM D 877. The minimum acceptable breakdown values are 22 kV for oil and 26 kV for RTemp and silicone.

(b) Acidity. The acidity test is covered in ASTM D 1534. This test indicates how much the oil has oxidized. The maximum permissible neutralization number is 0.4 for oil, 0.5 for RTemp, and 0.01 for silicone.

(c) Color. The color test is covered in ASTM D 1524. New oil is clear, while a dark oil indicates contamination. The maximum acceptable "color number" is 4 for oil and 1.5 for RTemp.

(2) *Comprehensive tests.* Comprehensive tests include a power factor test using an ASTM D 924 test cell, and an interfacial tension (IFT) test in accordance with ASTM D 971 or ASTM D 2285. A liquid at 20 degrees C, with a power factor as given in table 7-3, is considered satisfactory. If the value is above 0.5 percent investigate. If the value is above 2 percent, replace or recondition. The IFT will vary dependent upon the liquid used, but values below 40 dynes per centimeter for oil, 30 dynes per centimeter for RTemp, and 21 dynes per centimeter for silicone probably indicate that reconditioning is advisable.

Table 7-3. Satisfactory power factors

	Mineral oil	RTemp	Silicone
Power transformers	0.005	0.005	0.005
Distribution transformers	0.01	0.0 1	0.005

(3) *Dissolved gas-in-oil tests.* ASTM D 3612 covers this test which analyzes the combustible gas liberated by normal use of insulating liquid. The dissolved gases are extracted from an oil sample. A portion of the gases are then subjected to chromatographic analysis. This analysis determines the exact gases present and the amount of each. Different types of incipient faults have different patterns of gas evolution. With this test the nature of the problems can often be diagnosed, utilizing data from IEEE 104.

e. Reconditioning and replacement of insulating Liquids. If any of the tests indicate that an insulating liquid is not in satisfactory condition, it may be restored by reconditioning, reclaiming, or it can be completely replaced. Reconditioning is the removal of moisture and solid materials by mechanical means such as filter presses, centrifuges, or vacuum dehydrators. Reclaiming is the removal of acidic and colloidal contaminants, and products of oxidation, by chemical and absorbent means. These include processes involving Fuller's earth, either alone or in combination with other substances. Replacing the liquid involves draining, flushing, testing, and proper disposal of materials removed. It is recommended that these procedures be done by contract personnel who have the necessary experience and equipment.

CHAPTER 8

OVERCURRENT PROTECTIVE AND SWITCHING DEVICES

Section I-CONSIDERATIONS

8-1. Circuit interrupting devices.

This chapter describes circuit interrupting devices that can make (close), break (open), or modify the connections of an electrical system either under normal or (as a protective device) abnormal conditions or both. Included are fuses, switches, circuit breakers, circuit switchers, and reclosers.

a. Purpose of devices. Each of the devices provides one or more of the functions listed below:

(1) Switching-opening and closing of energized or de-energized circuits.

(2) Overcurrent protection-circuit interruption under excessive or fault current conditions.

(3) Automatic reclosing after overcurrent opening.

b. Devices may be classified by their insulating medium, such as:

(1) Air

(2) Vacuum

(3) Sulfur hexifluoride (SF,)

(4) Oil

(5) A combination of the above

c. Devices may be operated in the following manner:

(1) Internal action

(2) Manually operated external action

(3) Automatically operated external action

8-2. location of protective and switching devices.

These devices may be self-contained units, or installed in assemblies with other devices. The units or assemblies may be installed indoors or outdoors in enclosures suitable for protected or exposed installations respectively. Devices will normally be insulated for medium-voltage and high-voltage levels, except for secondary switchgear.

8-3. Protective and switching device instruction manuals.

Neither adjustments nor replacements of parts of switching apparatus should be attempted without first consulting the manufacturer's instruction manuals. If the manuals furnished with switching apparatus, especially any power-operated switching devices and any circuit breakers, are unavailable, every effort should be made to obtain copies from the nearest office of the applicable manufacturer.

8-4. Protective and switching device records.

Service operating records should be maintained on all switching apparatus. These records should include a history of all ampere ratings or settings, operations, and maintenance and inspections.

Section II-FUSES

8-5. Fuse usage.

Fuses provide relatively inexpensive protection by opening an electric line when a short circuit or overload occurs on the load side of the fuse. Always remember that a fuse is a single-phase device.

a. Construction. A fuse is designed to be an intentionally-weakened link in an electric circuit and to be the first point of failure.

(1) *Fuse link.* A fuse link uses a metal such as silver, tin, lead, copper or any alloy, which will melt when a predetermined current is maintained for a predetermined time period. The fuse's melting current (rating) is selected to permit severing the circuit before the same current could damage the electrical system.

(2) *Fuse tube.* A fuse tube is provided to prevent damage from the melting fuse link, which otherwise might start a fire from possible flying metal, and to aid in quenching the arc developed by severing the circuit. The fuse tube also provides the means of making contact with the rest of the electrical circuit.

b. Types. Only medium- and high-voltage fuses are covered in this manual. Most fuses commonly used on facility electrical distribution systems are distribution fuse cutouts and power fuses. The applicable industry standards differentiate between the two categories on the basis of their dielectric withstand or basic insulation level (BIL) either at distribution or power levels respectively. Fuse selections are also influenced by their installation application.

(1) *Distribution fuse cutouts.* A distribution cutout provides a mounting for the fuse element. Some cutouts have arc chutes designed for load-break operation. Fuse cutouts are not usually provided for switching circuits, but for protection of overhead equipment and sectionalizing of lines. Cutouts normally use an expulsion fuse, wherein

Affordable Wire Management, Exhibit No. EX1010
Case No. IPR2024-00182
Page 101 of 201

the arc produces a gas. A blown fuse may be indicated by dropping of the fuse, dropping of the door on an enclosed cutout, or by loss of an expendable vent cap, which yields to relieve the internal pressure.

(2) Power *fuses.* Power fuses can be fixed or dropout expulsion noncurrent-limiting type (solid material boric acid) or nonexpulsion current-limiting type (silver element with high-purity silica sand). The reduced expulsive emissions of boric acid fuses permit their use in enclosures.

(3) *Selection by location.* The selection by location is based on installing fuses which liberate gases (that is, some expulsion fuses) in outside locations, where protective enclosures such as switchgear are not required. Current-limiting fuses are expensive as compared to expulsion fuses.

(a) For use within confined spaces. Power fuses of the nonexpulsion current-limiting (silver-sand) type and expulsion solid material (boric acid) type comprise the majority of fuses suitable for application within buildings, vaults, or enclosures.

(b) For outdoor applications. Distribution fuse cutouts have a mechanical construction adapted to pole or crossarm mounting. Power fuses can also be used.

(4) *Other types of medium-voltage fuses.* Other types of fuses used on medium-voltage lines are current-limiting protectors, electronic fuses, liquid-type power fuses, and oil fuse cutouts.

(a) High-current or high-speed interruption. A current-limiting protector can carry high currents and yet limit let-through short circuit currents. Electronic fuses provide high-speed interruption of fault currents. Both are more expensive than distribution fuse cutouts or power fuses, and their use is limited for most facility applications.

(b) Liquid fuses. Liquid-type noncurrent-limiting power fuses have lower continuous and interrupting current capacities than other fuses. Liquid-type fuses have been used for wood-pole mounted applications in high-risk fire areas. The arc-quenching liquid is a petroleum product, which is not considered environmentally advisable so they should not be replaced. A new fuse holder will also be required, since the liquid-type fuse holder will not accept other types of fuses.

(c) Oil fuse cutouts. Oil fuse cutouts are not used as frequently as in the past, because of both environmental concerns and their lower interrupting duty.

8-6. Fuse operating safety considerations.

When operating fused devices, the following considerations apply.

a. Nonload-break devices. A nonload-break fused device energizing a circuit following fuse replacement should not be reopened unless the fuse has again blown or the circuit has been de-energized.

b. Load-break devices. A load-break fused device energizing a circuit following fuse replacement should not be reopened immediately. The time delay before reopening must allow the fuse to blow if there is an existing fault current beyond the load-break rating of the device. For fuse links of more than 100 amperes, this time delay could be as long as 10 minutes.

c. Open fuse holder. Outdoor fuses should be closed as soon as possible. Fuses left hanging for extended periods can undergo water damage and warpage, making reclosing of an energized circuit dangerous.

8-7. Fuse replacement.

Make certain that fuses, whether new or replacements, are of the proper type and rating. Never replace one type of fuse arbitrarily with a different type of fuse of the same physical size, or with a fuse having a different current rating, without specific engineering direction. Noncurrent-limiting fuses should not be used to replace current-limiting fuses.

a. Spare fuse units and replaceable parts. Mark and store parts for re-energizing, after locating and correcting the situation that caused the fuse to blow. A potential hazard may exist, if the circuit is re-energized with the fault condition still present.

(1) *Marking of spare fuses and parts.* Spare fuse units should be suitably marked, coded, or indexed to show the mounting, circuits, or equipment with which they are to be used; especially if several types and ratings are used in a given location. This minimizes the possibility of improper application.

(2) *Storing spare fuse units and parts.* Store spare fuse units and replaceable parts of fuse units so they will not be damaged, and will be readily available when needed.

b. Fuses subject to partial melting or deterioration. Fuses can be partially melted or damaged by fault currents of insufficient magnitude and melting time to cause complete melting. Observe the following precautions:

(1) In two- or three-phase applications, replace fuses in, all phases, when fuses in one or more phases are blown.

(2) In applications where fuses are used in series with other fuses or interrupting devices in the same phase, in such a manner that their melting or clearing curves, or both, cross one another, it is advisable to consider that the blowing of one makes the other unsuitable for continued service.

Affordable Wire Management, Exhibit No. EX1010
Case No. IPR2024-00182
Page 102 of 201

c. Replacing fuses on capacitor installations. Fuses used on capacitors should not be removed or replaced by hand, unless due precautions are taken beforehand to discharge and ground the capacitors in accordance with chapter 13, section II. The entire capacitor bank should be disconnected and grounded while replacing the fuses, unless the fuse link or its mounting, or both, can be removed safely and completely from the circuit using hot line tools.

d. Replacing of vented fuses. Vented fuses being replaced within this venting area should be deenergized during replacement. Vented fuses, operable from outside their vented area, may be replaced without deenergizing the circuit, but the use of hearing protectors is recommended.

e. Replacing of current-limiting nonvented type. Careless handling of these inherently fragile fuses may result in damage. When damage is suspected, the fuse should not be used.

f. Expendable cap cutouts. Do not install a nonexpendable cap on an expendable cap cutout because of the resulting reduction of the expendable cap cutout's interrupting capability.

8-8. Fuse maintenance.

The frequency of fuse inspection and maintenance must be determined based on the environmental conditions at the fuse location. Periodically inspect fuses which have not blown after a long period of time to guard against oxidation. Contact clips and ferrules (fuse terminals) can be covered with a special noncorrosive conductive lubricant. Before fuses are removed or installed, the fuse holders must be disconnected from the power source.

a. Fuses in general. The following procedures should be standard for all fuses:

(1) Inspect the fuse unit and renewable element (if the fuse is a renewable type) for corrosion, tracking, and dirt. Replace those units that indicate deteriorated condition.

(2) Inspect fuse holder insulators for dirt, dust, salt deposit, and the like, which can cause flashover. Also look for cracks or burn marks on insulators.

(3) For vented expulsion-type fuses, inspect the seal on the expulsion chamber to ensure that no moisture has entered the interrupting chamber of the fuse.

(4) Check for any missing or damaged hardware, such as nuts, bolts, washers, and pins.

(5) Clean and polish contact surfaces of clips and ferrules that are corroded or oxidized.

(6) Tighten all 1oose connections and check to see if the fuse clips exert sufficient pressure to maintain good contact.

(7) Fuses that show signs of deterioration, such as loose connections, discoloration, or damaged casing should normally be replaced.

b. Periodic inspection of fuse links in distribution cutouts. These fuse links may require periodic inspections, since corrosion of the lower terminal of the fuse link (generally a flexible cable) at the lower open-end of the fuse holder may cause breakage or melting at this point, rather than in the current-responsive element. Link-break cutouts are particularly susceptible since their link-break mechanisms impose a mechanical strain on fuses.

c. Inspection of distribution oil fuse cutouts. In addition to applicable general inspection requirements, the following items should be included:

(1) Sample insulating oil periodically and test for dielectric breakdown strength. Cutouts that experience regular load-break or fuse-interrupting duty should have their oil tested on a more frequent basis.

(2) Nonvented distribution oil fuse cutouts generally incorporate insulating materials in the fuse carriers that may be damaged dielectrically by excessive exposure to moisture or to a humid atmosphere. Keep the cutout sealed so that components and oil are protected from any contaminating exposure.

(3) Fuse elements are generally not interchangeable, and any substitution for the manufacturer's fuses may seriously affect the interrupting characteristics of the device.

(4) Examine cutouts for any evidence of oil leakage, and maintain the prescribed oil level.

(5) Check moveable bearing gasket surfaces, yoke compression, and interlocking features for satisfactory operation.

Section III-SWITCHES

8-9. Switch usage.

Switches are used to open or close circuits that may or may not be energized. If used for opening energized circuits, the switch contact construction must be capable of interrupting the current flow. Switches do not open the circuit automatically on some predetermined current overload. This function is provided by a fuse in series with a switch.

a. Operation. Switches can be controlled manually by the lineman at the switch location, or by control signals (initiated either manually or automatically) to operate electric, hydraulic, or pneu-

Affordable Wire Management, Exhibit No. EX1010
Case No. IPR2024-00182
Page 103 of 201

matic switch-operating mechanisms at the switch location.

b. Insulation. Insulation for the voltage and current interrupting level may be provided by operating the contacts in air, oil, vacuum, or in a sulfur hexifluoride (SF,) gas medium.

c. Load interrupting ability. Switches are classified by their ability to interrupt load.

(1) *Disconnecting switch.* This is a device used to open, close, or change the connections in a circuit or system. It has no interrupting rating and is used for isolating equipment only after the circuit has been opened by some other means. Two special types are as follows:

(a) Grounding switch. This is a switch used to connect a circuit or piece of equipment to ground.

(b) Horn-gap switch. This is a switch provided with arcing horns to aid in dispersing any arc that may occur when the switch is operated. This combination is sometimes referred to as an air-break switch. It should not be operated except to interrupt the charging current of a short length of line, or the magnetizing current of a de-energized transformer. Oil switches should always be considered as disconnect switches, unless the switch nameplate indicates a fault-closing rating suitable for the system's maximum available fault.

(2) *Interrupter switches.* Interrupter switches have specific capabilities for switching one or more of the following type of loads: 0.8 minimum lagging power factor load, parallel or loop load, transformer magnetizing load, line charging load, cable charging load, and capacitor bank load. Follow the manufacturer's instructions when operating interrupter switches.

(a) Nonfault closing type. This is a switch equipped with means of interrupting current, at rated voltage, not in excess of the switch's continuous rated current. Interrupter switches, which do not have a fault-closing rating, may be damaged if inadvertently closed on a short circuit. Appropriate precautions should be taken to avoid danger to the operator.

(b) Fault closing type. This is a switch equipped with means for interrupting current, at rated voltage, in excess of the switch's continuous rated current. Interrupter switches with fault-closing ratings are intended to provide adequate personnel protection, when closing into a short circuit, up to the asymmetrical fault-closing rating of the switch and when applied in accordance with the manufacturer's recommendation.

8-10. Operation of Switches.

Appropriate safety rules should be followed with special regard to the interrupting rating of the switch. In regard to periodic operation, check the manufacturer's instructions to ensure that the switch hasn't frozen closed. The following general rules apply:

a. All switches. The following applies to the operating of all switches:

(1) Check visually that the blade is fully closed and latched or fully open, as intended by the operation.

(2) The operating mechanism is designed properly for the switch and use of undue force, in the nature of an extension of the operating handle, or an extra person on the operating handle or switch stick, may cause severe damage to the switch or operating mechanism. Freeing of an iced switch mechanism may be assisted by a few sharp raps on the vertical operating pipe or suddenly applied tugs on the operating handle.

(3) Operate power-operated switches periodically to ensure that their mechanisms and control features are functioning properly. If the circuit cannot be de-energized to operate a switch, the operating mechanism should be disengaged from the linkage. Check control circuits and mechanisms in the disengaged manner, unless disengagement will change the overall adjustment.

b. Disconnecting switches:

(1) Check that no load is being carried by the switch, prior to operating a disconnecting or horn-gap switch.

(2) Check to determine that operation does not remove necessary safety grounds, prior to opening a grounding switch. Check the circuit to confirm that it is not energized, prior to closing.

(3) Operate disconnecting switches rapidly to reduce arcing time and possible burning of contacts.

8-11. Switch maintenance.

No work should be done on switches until both sides of each phase are de-energized and properly grounded. In addition to the recommendations given herein, follow the specific maintenance directions of the switch manufacturer. For insulating medium other than air, treat as described in Section IV.

a. Frequency of inspection. Switches should be inspected visually at a frequency determined by local conditions such as atmospheric contamination, use of contamination control coatings, frequency of operation, or fault current exposure.

(1) *Need.* If a switch cannot be maintained on a periodic basis, its service life may be affected. When operated, it is recommended that the switch be opened and closed several times in order to clean the contacts and free the moving parts.

Affordable Wire Management, Exhibit No. EX1010
Case No. IPR2024-00182
Page 104 of 201

(2) *Visual aids.* Binoculars can facilitate spotting switches that are obviously in need of repair or maintenance because of broken insulators or other parts. Visual inspection of a wet switch, or the use of a temperature-scanning detector,. may indicate hot spots which are possible sources of trouble. Directional microphones or ultrasonic detectors can be used to locate local corona sources needing removal.

b. Scheduling. A relatively small amount of maintenance is required on modern switches, so where possible, it is recommended that the schedule for such maintenance be coordinated with that of associated equipment. Schedule special inspection and maintenance whenever the switch has carried heavy short-circuit current.

c. Checking. Examination of de-energized and grounded switches should include the following items:

(1) *Operating mechanism.* Check the adjustment of the operating mechanism, operating rod, and interphase tie rods (if used) to ensure simultaneous and smooth operation of the switch blades. Mechanisms should be cleaned and lubricated only when so recommended, and then in accordance with the manufacturer's instructions. (Many modern switches are built with self-lubricating bearings.) Examine all metallic parts of an operating mechanism including operating handle connection for signs of rust, corrosion, and loose or broken connectors. Switches located outside of a fenced and locked area, and having operating handles at ground level, require locking provisions on handles for both the open and closed positions. Switches located within a fenced and locked area, are subject to local regulations for locking.

(a) Inspect all live parts for scarring, gouging, or sharp points, which could contribute to excessive radio noise and corona. Check corona balls and rings for damage which could impair their effectiveness.

(b) Power-operating mechanisms for switches are usually of the motor-driven, spring, hydraulic, or pneumatic type. Follow the manufacturer's instructions with regard to the limit switch adjustment. Check associated relay equipment for poor contacts, burned out coils, and adequacy of supply voltage. The complete electrical circuit of a motor-operated mechanism should be checked to ensure proper operation and wiring which is secure and free of insulation defects.

(c) Inspect, check, and test all safety interlocks for proper operation.

(2) *Insulators.* Examine insulators for cracks, chips, breaks, and evidence of flashover. Bad insulators should be replaced. Insulators should be cleaned to remove any contaminating materials that may be present. Refer to chapter 3, section IV The presence of an excessive amount of contamination should be reported to the supervisor, as the persistence of such a condition may require corrective measures.

(3) *Mounting.* Check mountings for evidence of rust and corrosion and to ensure proper alignment and securement. Ground connections must be tight.

(4) *Blades.* The blade or movable contact of the switch should be inspected for evidence of overheating, which may be indicated by discolorations. If overheating is caused by poor contact, it should be corrected when contacts are adjusted and cleaned. Switches that appear to be overheated, due to load currents in excess of rating, should be reported to the supervisor.

(5) *Blade Latch.* A blade latch is used on a hook stick operated switch to hold blade in closed position. Such a switch should be checked in the closed position, to determine whether the catch is functioning properly.

(6) *Contacts.* Contacts should be cleaned and adjusted in accordance with manufacturer's instructions. Modern switches are normally designed so that the contacts are self-cleaning, by virtue of the opening and closing action of the switch. After a switch remains in either position for a long time, it should be operated several times during a maintenance inspection. This operation will clean the contact surfaces. Operate only after getting clearance and after the circuit has been deenergized.

(a) Do not use a coarse abrasive to clean contacts. If contact pitting is minor, smooth the surface with clean crocus cloth or as the manufacturer recommends.

(b) Where arcing horns are used, ensure that they make contact, as intended, during opening and closing operations.

(c) A nonoxidizing lubricant should be used to protect the contacts against oxidation and to lubricate the blade hinge. Silicone greases are excellent for this purpose, as they are relatively unaffected by changes in temperature and are highly water resistant.

(7) *Terminals and connections.* Terminals should be checked to ensure that they are secure. Connections showing evidence of heat should be corrected as a high-resistance contact is indicated.

(8) *Interrupting elements.* Load interrupter switches are equipped with an interrupter element, designed to quench the arc that results when the switch is opened under loaded conditions. Basically, these elements are shunt devices, installed as part of the switch, through which current passes only as the switch is opened. In some designs the arc quenching medium is air, but for the higher voltage

Affordable Wire Management, Exhibit No. EX1010
Case No. IPR2024-00182
Page 105 of 201

switches the interrupter may use some other medium, such as sulfur hexifluoride gas. Interrupters should receive the same inspection and maintenance as the switches on which they are installed. Many interrupter switches are designed so that material is consumed from the walls which are exposed to the electric arc. Particular attention should be given to such parts, and they should be maintained or replaced in accordance with the manufacturer's instructions. Interrupter contacts should be inspected for damage caused by arcing. Contacts showing evidence of excessive wear should be replaced in accordance with manufacturer's recommendations. Interrupters with sealed gas-filled chambers have pressure gages to indicate loss of pressure. Field experience indicates that interrupters using a sealed gas chamber will require recharging every 2.5 to 3 years or more often.

Section IV-CIRCUIT BREAKERS

8-12. Circuit breaker usage.

Circuit breakers are a special form of switching mechanism, which can open and close circuits under both normal and abnormal conditions. When they are electrically controlled, they can be operated locally or remotely, or by both modes. Oil, SF,, gas, vacuum, and air are the insulating mediums used on most installations. The selection of the insulation generally relates to the voltage level being interrupted.

a. Voltage level relative to the insulating media selection.

(1) *High-voltage units.* Until recently most installed high-voltage circuit breakers were of the oil-insulated type. However, the use of SF,, gas insulated units is increasing as SF, units take less space for a given voltage and are environmentally preferable.

(2) *Medium voltage units.* Newly installed medium-voltage switchgear utilizes vacuum construction which provides a considerable space saving over air-magnetic units now being phased out. In the future, SF, switchgear units will probably become more common.

(3) *Low-voltage units.* Only air-insulated power circuit breaker switchgear of the solid-state type is described in this manual.

b. Safety measures. Before initiating any maintenance inspection which requires touching a circuit breaker, check to ensure that:

(1) The circuit breaker has been tripped (open).

(2) The circuit breaker is disconnected from the circuit on both sides, either by opening disconnect switches or by removing the drawout portion of the circuit breaker from the switchgear dependent upon the installation.

(3) All control circuits are open and potentiall transformer fuses are removed.

(4) The supply to pneumatically and hydraulically operated circuit breakers is shut off.

(5) Wound springs in stored-energy mechanisms have been released.

(6) Circuit breakers and controls are properly tagged.

(7) The circuit breaker is grounded.

(8) Suitable barriers are installed between the circuit breaker and adjacent apparatus that may be energized. In crowded installations, barriers may be of rope or net, with suitable danger flags, or of temporary rigid construction using insulating material.

(9) Requirements of departmental safety publications are being observed.

8-13. Frequency of circuit breaker maintenance.

A circuit breaker is a much more complex and expensive item than the switch and fuse combination, which fulfills the same function to a lesser degree. Circuit breakers are therefore generally used for the more important circuits, where increased reliability and flexibility is required for equipment operation and prompt restoration of service.

a. Frequency of inspection. The frequency of inspection should be based on service and operating condition. A circuit breaker should be inspected whenever it has interrupted current at or near its rated capacity. The average frequencies given here should be reconsidered if the following conditions apply or as equipment ages.

(1) High humidity and high ambient temperature

(2) Dusty or dirty atmosphere

(3) Corrosive atmosphere

(4) Frequent switching operations

(5) Frequent fault operations

b. Maintenance of nonmetalclad medium- and high-voltage circuit breakers. Most manufacturers recommend complete inspections, external and internal, every 6 to 12 months for circuit breakers above 15 kilovolts. However, utility company experience has shown that considerable unnecessary expense may be involved in adhering to the manufacturer's recommendations. With proper external checks, the expense, delay, and labor of internal inspections may be avoided without sacrificing dependability. Internal conditions can be determined through oil analysis, power factor testing, and the

Affordable Wire Management, Exhibit No. EX1010
Case No. IPR2024-00182
Page 106 of 201

millivolt drop test. Partial maintenance can then be performed annually and complete maintenance every 5 years.

(1) Inspection schedule for new circuit breakers. A temporary schedule of frequent inspections is necessary after the erection of new equipment, the modification or modernization of old equipment, or the reapplication of old equipment under different conditions. The temporary schedule is required to correct internal defects, which may appear in the first year of service, and to correlate external check procedures with internal conditions as a basis for establishing a more conservative maintenance program thereafter. If a circuit breaker shows no serious defects during early internal and external inspections, and no heavy interrupting duty is imposed, the following inspection schedule is recommended.

(a) Twelve months after erection. External inspection and checks.

(b) Twelve months after the first inspection. Complete inspection and adjustment.

(c) Twelve months after previous inspection. If no problems, perform regular maintenance. If there are problems, another inspection should be performed after 12 months; then return to the maintenance schedule for existing circuit breakers.

(2) Inspection schedule for existing circuits breakers. Normally, no more than 1 year should elapse between external inspections and 5 years between internal inspections. It is advisable to make a complete internal inspection after the first severe fault interruption.

c. Medium-voltage circuit breakers in metalclad switchgear. Inspection and maintenance should be performed annually.

d. Circuit breakers in low-voltage switchgear. Inspection and maintenance should be performed every 5 years.

8-14. Maintenance of nonmetalclad switchgear circuit breakers.

Maintenance requirements include both general external and internal inspection guidelines. Also guidelines specific to the insulating medium (oil and SF, gas) are given.

a. General external inspection guidelines. The following items should be included in an external inspection.

(1) Visually inspect the circuit breaker and the operating mechanism. Carefully examine tripping latches, since small errors in adjustments, clearances, and roughness of the latching surfaces may cause the circuit breaker to latch improperly or increase the force necessary to trip the circuit breaker, such that the electrical tripping will not always be successful. Too much opening spring pressure can cause excessive friction at the tripping latch and should be avoided. Electromagnetic forces, due to the flow of heavy short-circuit currents through the circuit breaker, may cause extra pressure on the tripping latch.

(2) Lubricate the bearing surfaces of the operating mechanism as recommended in the manufacturer's instruction book. Avoid excessive lubrication because oily surfaces collect dust and get stiff in cold weather, resulting in excessive friction.

(3) If possible, observe the circuit breaker operation under load.

(4) Operate the circuit breaker manually and electrically, and look for malfunctions. Determine the presence of excessive friction in the tripping mechanism and the margin of safety in the tripping function by testing the minimum voltage required to trip the circuit breaker. This can be accomplished by connecting a switch and rheostat in series with the trip-coil circuit at the circuit breaker (across the terminals to the remote control switch) and a voltmeter across the trip coil. Starting below 50 percent of rated trip-coil voltage, gradually increase the voltage until the trip-coil plunger picks up and successfully trips the circuit breaker. Make several trial tripping operations of the circuit breaker, and record the minimum tripping voltage. Most circuit breakers should trip at about 56 percent of rated trip-coil voltage. Measure the trip-coil resistance and compare it with the factory test value to disclose shorted turns. Many modern circuit breakers have trip coils which will overheat or burn out if left energized for more than a short period. An auxiliary switch is used, in series with the coil, to open the circuit as soon as the circuit breaker has opened. The auxiliary switch must be properly adjusted to successfully break the arc without damage to the contacts. Record the minimum voltage that will close the breaker and the closing coil resistance.

(5) Trip the circuit breaker by protective relay action.

(6) Check adjustments by measuring the mechanical clearances of the operating mechanism associated with each tank or pole. Appreciable variation between the clearance measured and the previous setting usually indicates mechanical trouble. Temperature, and difference of temperature, between parts of the mechanism affect the clearances. The manufacturer's recommended tolerances usually allow for these effects.

(7) Check the power factor of bushings and the circuit breaker.

(8) The measurement of the electrical resistance between external bushing terminals of each pole can indicate whether maintenance is required.

Affordable Wire Management, Exhibit No. EX1010
Case No. IPR2024-00182
Page 107 of 201

An abnormal increase in the resistance of this circuit may indicate foreign material in the contacts, loose contact support, loose jumpers, loose bushing connections, or corrosion. Any one of these may cause localized heating and deterioration. Measure resistance of the main contact circuits with a portable double bridge (Kelvin) or a "Ductor." The circuit breaker contacts should not be opened during this test, because of possible damage to the test equipment. Compare resistance values to the manufacturer's values or to values found on a similar circuit breaker. These values should not vary more than 25 percent between poles.

(9) Motion analyzers can provide graphic records of close or open initiation signals; contact closing or opening time with respect to initiation signals; contact movement and velocity; and contact bounce or rebound. Circuit breaker motion analyzers are portable devices designed to monitor the operation of power circuit breakers, as they permit mechanical coupling of the motion analyzer to the circuit breaker operating rod. The records obtained not only indicate when mechanical problems are present, but also help isolate the cause of the problems. Obtain a motion-analyzer record on a circuit breaker when it is first installed. This will provide a master record which can be filed and used for comparison with future maintenance checks. Tripping and closing voltages should be recorded on the master record, so subsequent tests can be performed under comparable conditions. Time-travel records are taken on the middle pole from the operating mechanism.

(10) Check the air system of a pneumatic mechanism for leaks.

(11) Check control wiring for loose connections.

(12) Check the settings of compressor switches, low pressure alarms, and cut-off switches.

(13) Inspect and check the operating mechanism. Lubricate all pins, bearings, and latches, using the recommended lubricant.

b. External inspection guidelines specific to the insulating medium used. Oil dielectric tests are needed for oil circuit breakers, and a moisture test should be provided for gas-insulated units.

(1) *Oil-insulated circuit breakers.* Check oil dielectric strength, power factor, acidity, and color. The dielectric strength must be maintained to prevent internal breakdown under voltage surges and to enable the interrupter to function properly. Its action depends upon changing the internal arc path from a fair conductor to a good insulator, in the short interval while the current is passing through zero. A manufacturer's instructions should state the lowest allowable dielectric strength. However, the dielectric strength should be maintained above 25 kilovolts, even though some manufacturer's instructions allow 16 kilovolts. If the oil is carbonized, filtering may remove the suspended particles, but the interrupters, bushings, and other internal parts must be wiped clean. If the dielectric strength has been lowered by moisture, check and eliminate the source of the moisture (such as fiber or wood parts); and dry the affected parts thoroughly before placing the circuit breaker in service.

(2) *Circuit breakers insulated with SF,.* Circuit breakers having SF, insulation should be tested every 3 months during the first year of service, and at least every 12 months thereafter, to determine the moisture content of the SF, gas. Moisture content must also be tested when gas is added. Service equipment according to the manufacturer's instructions. Moisture content should be less than 50 parts per million by volume (ppm,). Do not energize a section of the gas-insulated equipment, if the SF, gas density is less than 50 percent of nominal or if the moisture content of the gas exceeds 1000 ppm,. Refer to chapter 15, section II in regard to the toxicity of SF, gas.

c. Internal inspection guidelines. When an internal inspection is required it should be made at the same time as an external inspection. The circuit breaker tanks or contact heads should be opened and the contacts and interrupting parts inspected. Follow these guidelines and the checklist furnished by the manufacturer. Such a checklist may provide forms useful for recording inspection and maintenance data.

(1) Internal difficulties are most likely to appear early in the use of a circuit breaker, which is why early internal inspections are recommended. As unsatisfactory internal conditions are corrected, and if one or two later inspections indicate satisfactory internal conditions, the frequency of internal inspections may safely be decreased.

(2) For circuit breakers equipped with pneumatic operators, drain and inspect the air tanks.

(3) Perform post maintenance diagnostic tests on circuit breakers in accordance with instructions from test equipment and circuit breaker manufacturers, and follow established maintenance procedures.

(4) Test operate the circuit breaker and record the number of operations. The tests should include all alarms (including control alarms), switches, and the manufacturer's recommendations.

d. Internal inspection guidelines specific to the insulating medium used. The insulating medium must be removed, as necessary, to examine the circuit breaker internally.

(1) *Oil-insulated circuit breakers.* Inspecting the tank includes removing the oil, ventilating the

Affordable Wire Management, Exhibit No. EX1010
Case No. IPR2024-00182
Page 108 of 201

tank, visually inspecting the interior, and wiping down the tank and interior parts.

(a) Maintenance of the integral parts (contacts, interrupter assemblies, internal current transformers, resistors, capacitors, and lift rods) includes checking, measuring, adjusting, aligning, and making repairs as needed. Lubricate all parts and components that are required to be lubricated. Replace any seals and gaskets, if necessary. Replace all desiccant materials, if applicable.

(b) Reseal the tank after inspection and maintenance.

(c) Refill the tank to the proper oil level and inspect for leaks.

(2) *Circuit breakers insulated with SF_6 gas.* Remove SF, gas from the circuit breaker; transfer the gas from the circuit breaker (use a gas processing unit); pull a vacuum on the circuit breaker to be certain that all of the gas has been removed; and release the vacuum on the circuit breaker with dry air or nitrogen to avoid pulling moisture into the tanks.

(a) Inspecting the tank includes opening the tank, vacuuming any residue (if present), ventilating, and wiping the inside of the tank with approved solvent.

(b) Inspect all parts for wear and damage, including the fiberglass components and seals.

(c) Install factory-recommended overhaul and sealer kits. Replace all desiccant materials, if applicable.

(d) Perform any repairs or adjustments.

(e) Seal the circuit breaker tank and pull a vacuum in accordance with manufacturer's specifications. If the vacuum holds for the specified amount of time, this indicates that no leaks are present.

(f) Refill the tank to the proper pressure.

e. Typical internal circuit breaker problems. Evidence of the following tendencies indicate internal problems which need to be corrected.

(1) Loosening of keys, bolts (especially fiber), cotter pins, operating rods, supports, and guides or an indication of wear or weakness.

(2) Formation and accumulation of carbon or sludge in the interrupter or on bushings.

(3) Indication that the interrupter is inclined to flash over and rupture the static shield or resistor or interrupter parts or barriers are disposed to burn or erode.

(4) Indication that bushing gaskets have leaked moisture into the circuit breaker insulating material.

(5) Cracks in any of the above parts.

f. Influence of duty imposed. The need for maintenance is influenced by any circuit breaker's operating duty. The influence of operating duty given below for oil circuit breakers will also apply (except for the different insulating medium) to SF, gas-insulated circuit breakers.

(1) *Influence of light duty.* If the circuit breaker has been energized on both sides, but the contacts are open, erosion in the form of irregular grooves (called tracking) may appear on the inner surface of the interrupter or shields, due to electrostatic charging current. This is usually aggravated by a deposit of carbon sludge, which has previously been generated by some interrupting operation. If the circuit breaker has remained closed and is carrying current, evidence of heating of the contacts may be found if the contact surfaces were not clean, have oxidized, or if the contact pressure was improper. Any shrinkage and loosening of wood or fiber parts (due to loss of absorbed moisture into the dry oil) will take place following the circuit breaker installation, independent of the circuit breaker operation. However, mechanical operation will make any loosening more evident. If possible, before inspection, open and close the circuit breaker while energized. If this is not possible, additional information may be gained by operating the deenergized circuit breaker several times, measuring the contact resistance of each pole before and after each operation.

(2) *Influence of normal duty.* The severity of duty imposed by load switching, line deenergizing, and fault interruptions depends upon the type of circuit breaker involved. In circuit breakers which employ an oil blast generated by the power arc, the interruption of low current faults or line charging current may cause more deterioration, because of low oil pressure, than the interruption of high current faults. In some designs using this basic principle of interruption, distress at low interrupting duty is minimized by multiple breaks, rapid contact travel, and turbulence of the oil caused by movement of the contact and mechanism. In designs employing a mechanically driven piston to supplement the arc-driven oil blast, the performance is more uniform. Better performance is yielded by designs which depend upon a mechanically driven oil blast for arc interruption. In this type, contact erosion may appear only with heavy interruptions. The mechanical stresses that accompany heavy interruptions are always more severe. These variations of performance among various designs must be considered when evaluating the need for maintenance and performance of a circuit breaker. Because of these variations, the practice of evaluating each fault interruption as the equivalent of 100 no-load opera-

Affordable Wire Management, Exhibit No. EX1010
Case No. IPR2024-00182
Page 109 of 201

tions is approximate, although it may be a useful guide in the absence of other information.

(3) *Influence of seuere duty.* Contact erosion and damage from severe mechanical stresses may occur during large fault interruption. Reliable indication of the stress, which a circuit breaker is subjected to during fault interruptions, can be obtained by automatic oscillograph records on systems which provide this feature. Deterioration of the circuit breaker is proportional to the energy dissipated in the circuit breaker during the interruption. The energy dissipated is proportional to the current and the duration of arcing, that is, the time from the moment the contacts part to current interruption. However, oscillographs do not always record the moment that the contacts part, and it may be necessary to determine the parting from indicated relay time and the known time for circuit breaker contacts to part. When automatic oscillograph records are available, they may be as useful in guiding oil circuit breaker maintenance as in showing relay and system performance. When automatic oscillographs are not available, an approximate indication of fault duty imposed on the circuit breakers may be obtained from relay targets and accompanying system conditions. All such data should be tabulated in the circuit breaker maintenance file.

8-15. Maintenance of metalclad circuit breakers.

The insulating media covered include air and vacuum.

a. General maintenance procedures. The following suggestions are for use in conjunction with manufacturer's instruction books for the maintenance of drawout medium-voltage circuit breakers installed in metal-clad switchgear. Record all problems.

(1) *Basic requirements.* Drawout devices should be removed for inspection and operation. During inspection all deposits or dust will be removed with a clean lint-free cloth; a vacuum cleaner might be helpful. All smoothing of surfaces should be done with crocus cloth.

(2) *Operating history.* Record the number of operations of the circuit breaker.

(3) *Test position.* Before complete removal put the circuit breaker in the test position. Use a test coupler to operate the circuit breaker electrically. Check the performance of all controls such as protective relays, switches, motors, indicating devices, and alarms.

(4) Remove the drawout portion of the circuit breaker and perform visual inspections, operations, measurements, tests, and final checks before inserting the drawout portion into the switchgear cubicle for re-energization as appropriate.

b. Air-circuit breaker maintenance requirements. Remove box barriers from the circuit breaker and clean all insulating parts including the bushings and the inside of the box barriers. The unit is now ready to be inspected, operated, and tested.

(1) *Visual inspections.* Inspect the unit to determine its operating condition. Perform any repairs in accordance with the manufacturer's instructions.

(a) Check the bushing primary disconnect stubs and finger cluster. Bushing insulation should be clean, dry, smooth, hard, and unmarred.

(b) Check insulation and outside of arc chutes for holes or breaks; small cracks are normal. If ceramics or fins are broken replace arc chutes. The throat area of arc chutes may need to be cleared of contamination with crocus cloth.

(c) Check arcing and primary contacts for uneven wear, or impairment from burns and pitting. Correction of damage by smoothing or resilvering may be necessary. Replace badly damaged contacts. Follow the same procedure for primary disconnect stubs and other current-carrying parts. Grease contacts with an approved grease.

(d) The tightness of all connections is of paramount importance. Check and tighten or secure, as necessary, any loose nuts, bolts, retaining rings, and mechanical linkages which are a part of the circuit breaker and its operating mechanism. Ensure that all electrical wiring connections are secure.

(e) Check all bearings, cams, rollers, latches, and buffer blocks for wear. Teflon-coated sleeve bearings do not require lubrication. All other sleeve bearings, rollers, and needle bearings should be lubricated with SAE 20 or 30 machine oil. Lubrication is not required on ground surfaces having a dark molybdenum disulfide coating. Lubricate all other ground surfaces such as latches, rollers, or props with an approved grease.

(f) Check actuator relays, the charging motor, and secondary disconnects for damage, evidence of overheating, or insulation breakdown.

(g) Check contacts of control relays for wear and clean as necessary.

(h) Check for possible damage to wiring and replace any wiring with worn insulation.

(i) Check for damage to magnetic blow-out coils if they are used.

(2) *Operations and measurements.* After correcting any deficiencies revealed by the visual inspection, perform these circuit breaker operations and measurements.

Affordable Wire Management, Exhibit No. EX1010
Case No. IPR2024-00182
Page 110 of 201

(a) If the primary contact gap required adjustment, operate the circuit breaker several times to verify correct performance.

(b) Check the operation and the clearance of the trip armature travel, and release the latch in accordance with the appropriate instruction book. Replace any worn or damaged parts disclosed by this operation.

(c) On stored-energy circuit breakers, operate the circuit breaker slowly. By using the spring blocking device, check for binding or friction, and correct if necessary. Make sure contacts can be opened or closed fully.

(d) Reinstall box barriers and measure insulation resistance of each bushing terminal to ground and phase to phase. Record resistance readings and also temperature and humidity.

(3) *Tests.* Perform tests every **1** to 3 years dependent upon the severity of duty encountered by the circuit breaker.

(a) Perform a hi-pot test on the circuit breaker bushings.

(b) Check the closed circuit breaker contact resistance.

(c) Perform a power factor test.

(d) Perform a corona test.

(4) *Final checks.*

(a) Using the coupler, test operate the circuit breaker both electrically and manually. Check all interlocks.

(b) Insert and operate the circuit breaker in the switchgear cubicle. Watch for proper operation of the positive interlock trip-free mechanism. The circuit breaker should trip whenever it has not been fully inserted, or whenever it is in the test position.

(c) Remove the circuit breaker from the switchgear cubicle and check the primary disconnect wipe. Refer to the appropriate instruction book.

(d) Insert the circuit breaker into the switchgear cubicle, ready for energization.

c. Vacuum circuit breaker procedures. Direct inspection of the primary contacts is not possible, because they are enclosed in vacuum containers. The operating mechanisms are similar to the air circuit breakers, and may be maintained in the same manner. It is not recommended that a vacuum circuit breaker be operated more than 2,000 times without an inspection.

(1) *Specific checks applying to vacuum circuit breakers.* Checking for contact erosion and vacuum condition is made with the circuit breaker removed from its switchgear cubicle.

(a) Close the circuit breaker and measure the spring plate overtravel. Consult the manufacturer's instruction book for allowable overtravel. If the specified overtravel is exceeded, the vacuum interrupter must be replaced because of excessive contact erosion.

(b) Perform a high-potential test to check the condition of the vacuum. Consult the manufacturer's instruction book for test value, or use 60 percent of the final factory test value.

(2) *Other requirements.* Follow appropriate requirements given for air circuit breakers.

d. Metalclad switchgear. Inspect enclosure housing, buses, and other switchgear members every time that circuit breakers are inspected. Supplement the following with the manufacturer's recommendations:

(1) *Enclosure housing.* The enclosure housing's function is to eliminate personnel exposure to line parts and to protect equipment from environmental deterioration.

(a) Establish a program to regularly lubricate hinges, latches, and locks and maintain enclosure finishes.

(b) Outdoor assemblies require elimination of moisture. Check space heaters and fans and their thermostats for proper functioning. Ventilators must be clear of obstructions and air filters require systematic cleaning. Check for roof or wall leaks and for floor openings which may require sealing.

(2) *Buses.* De-energize buses and ground in accordance with safety requirements. Inspection, cleaning, tightening, and testing for buses are as necessary as for circuit breakers.

(a) Inspect the surface of all insulating members for damage before any cleaning or dusting, as well as after cleaning. Damage caused by electrical distress will usually be evident on the insulating surface as corona markings or tracking parts.

(b) Inspect with special care the areas most susceptible to tracking, corona, and thermal heating. These areas include splices and junction points, boundaries between adjoining insulators, between an insulating member and a grounded metal surface, or bridging paths across insulating surface. Check also for electrical distress that can occur on hidden surfaces, such as adjacent edges between upper and lower members of split bus supports or on sharp edges in the switchgear that are not insulated.

(c) Remove dust and dirt on both phase and ground buses by wiping with a dry, clean cloth or by vacuuming.

(d) Check tightness of accessible bolted bus joints by the calibrated wrench method. Refer to manufacturer recommendations for proper torque

Affordable Wire Management, Exhibit No. EX1010
Case No. IPR2024-00182
Page 111 of 201

values. Also check alignment and contacts of primary disconnecting devices for abnormal wear or damage. Check for sulfide deposits and use a solvent, such as alcohol, for removal of these deposits.

(e) After cleaning and adjusting, run insulation resistance tests to measure resistance to ground and compare with previous readings for any sign of weakening of the insulation system. Comparisons should be made using a common temperature and humidity base.

(3) *Miscellaneous checks.* Check supporting devices such as protective relays and controls as covered in chapter 11 and as follows:

(a) Test key interlock systems by a key exchange made with devices operating in an off-normal position to ensure that they have not been bypassed. A closure attempt is required on locked-open devices and an opening attempt is required on locked-closed devices.

(b) Finally, compare equipment nameplate information with latest one-line diagram and report discrepancies.

8-16. Maintenance of low-voltage power circuit breakers.

The following guidelines are provided for maintenance of low- voltage circuit breakers. Also follow the manufacturer's detailed instruction.

a. Maintenance. Maintenance is given for drawout circuit breakers. Modify instructions, as required, if circuit breakers are of the fixed type.

(1) Initially check that the circuit breaker is in the test position, prior to withdrawing it from its enclosure.

(2) Clean insulating parts, including bushings.

(3) Check the alignment and condition of the movable and stationary contacts, and adjust according to the manufacturer's instruction book.

(4) Check arc chutes and replace any damaged parts.

(5) Inspect the circuit breaker operating mechanism for loose hardware and missing or broken cotter pins. Examine the cam, latch, and roller surfaces for damage or wear.

(6) Clean and lubricate the operating mechanism with a light machine oil (SAE-20 or SAE-30) for pins and bearings. A nonhardening grease should be used for the wearing surfaces of cams, rollers, and other operating parts.

(7) Set the circuit breaker's operating mechanism adjustment, as described in the manufacturer's instruction book. Excessive wear and the need for a complete overhaul is usually indicated when these adjustments cannot be made within the specified tolerances.

(8) Replace contacts, if badly worn or burned, and check the control device for freedom of operation.

(9) Inspect wiring connections for tightness.

b. Switchgear. Follow the appropriate recommendation for medium-voltage switchgear.

8-17. Repair of circuit breakers.

Table 8-1 is a troubleshooting chart for the oil portion of medium- and high-voltage oil-insulated circuit breakers. Table 8-2 is a troubleshooting chart for medium- and low-voltage power circuit breakers.

Table 8-l. Troubleshooting chart for oil problems

Trouble	Cause	Remedy
Insufficient oil (in oil-circuit-breaker tanks).	Leakage of oil. Oil throw during operation.	Locate point of leakage and repair. Tighten up joints in oil lines. Fill oil tanks to proper oil level.
Dirty oil (in oil-circuit-breaker tanks).	Carbonization from many operations.	Drain poor oil, and filter or replace with new oil. Clean inside of tank and all internal parts of breaker.
Moisture present in oil.	(1) Condensation of moist atmosphere.	(1) Drain and filter oil or put in new oil.
	(2) Entrance of water from rain or other source.	(2) Repair source of water entrance.
Sludging of oil.	Overheating.	Filter or put in new oil. Remove source of overheating.
Gaskets leaking.	Improper installation of gaskets at a previous inspection or repair. Oil saturation.	Put in new gaskets, treated in accordance with circuit breaker instruction book.
Insulation failure.	Absorption of moisture and accumulation of dirt, grime, carbon and the like on bushing and insulating parts.	Thoroughly clean all insulated parts. Bake or dry out water-soaked parts (or treat in accordance with directions in the circuit breaker instruction book).

Affordable Wire Management, Exhibit No. EX1010
Case No. IPR2024-00182
Page 112 of 201

Table 8-2. Troubleshooting chart for power circuit breakers

Trouble	Cause	Remedy
Overheating	Poor condition of contacts:	
	(1) Out of proper alignment and adjustment.	(1) Contacts should be lined up and adjusted properly.
	(2) Burned and pitted because of lack of attention after many heavy operations, or too frequent operation.	(2) Burned and pitted contacts should be dressed up, if practical, or replaced with new parts. (High-pressure butt-type contacts usually do not require dressing. Silver-to-silver contacts should be dressed very carefully and only when actually required.))
	(3)) Circuit breaker kept closed (or open) for too long a period (copper contacts).	(3) Operate circuit breaker more frequently to wipe contacts clean. It may be advisable to consider the installation of new silver-to-silver contacts. The nearest manufacturer's should be consulted.
	(4) Overloading (continuous or prolonged current in excess of circuit breaker rating).	(4) If the circuit breaker is overheating because of excess current, one of two remedies can be followed: (a) Replace with circuit breaker having an adequate rating for the present or future load. (b) Arrange circuits to remove the excess load.
	(5) Transmission of heat to the circuit breakers from overheated or inadequate cables or connection bars.	(5) If the bars or cables overheat because of current in excess of their capacity, this can be remedied by increasing the carrying capacity (that is, increasing the size or number of conductors) or by removing the excess current from the circuit.
	(6) Loose connections or terminal connectors.	(6) Tighten.
	(7) Ambient temperature is too high.	(7) Relocate in a cooler place, or arrange some means of cooling.
Failure to trip	(1) Mechanism binding or sticking. Caused by lack of lubrication or mechanism out of adjustment.	(1) Lubricate mechanism. Adjust all mechanical devices, such as toggles, stops, buffers, and opening springs, according to the instruction book.
	(2) Failure of latching device.	(2) Examine the latch surface. If worn or corroded, it should be replaced. Check latch wipe, and adjust according to the instruction book.
	(3) Damaged trip coil.	(3) Replace damaged coil.
	(4) Blown fuse in control circuit (where trip coils are potential type).	(4) Replace blown fuse.
	(5) Faulty connections (loose or broken wire) in trip circuit.	(5) Repair faulty wiring. See that all binding screws are tight.
	(6) Damaged or dirty contacts on tripping device.	(6) Dress or replace damaged contacts or clean dirty contacts.
Failure to close or to latch closed	(1) Mechanism binding or sticking because of lack of lubrication or improper adjustment of the circuit breaker mechanism.	(1) Lubricate mechanism. Adjust all mechanical devices, such as toggles, stops, buffers, and opening springs, to specifications in the circuit breaker instruction book.
	(2) Burnout of operating (closing) coil (of electrically operated breakers) caused by operator holding the control switch closed too long.	(2) Replace damaged coil and teach the users the proper method of operation. A better remedy would be to change the connections to include an auxiliary switch, which automatically cuts off the closing coil as soon as the circuit breaker closes.
	(3) Closing relay sticking.	(3) Check or adjust the closing relay.

Affordable Wire Management, Exhibit No. EX1010
Case No. IPR2024-00182
Page 113 of 201

Table 8-2. Troubleshooting chart for power circuit breakers (continued)

Trouble	Cause	Remedy
	(4) Cutoff switch operating too soon.	(4) Adjust operation of the cutoff switch to delay cutoff so as to allow the circuit breaker to close fully.
	(5) Cutoff switch operating too late, causing the circuit breaker to bounce open.	(5) Readjust to reduce power at the end of the stroke, and eliminate bounce.
Failure to close or to latch closed (con't)	(6) Insufficient control voltage (of an electrically operated circuit breaker) caused by: (a) Too much drop in leads (b) On ac control-poor regulation. (c) On dc control-battery not fully charged or in poor condition.	(6) Provide the following: (a) Install larger wires; improve contacts at connections. (b) Install larger control transformer. Check rectifier, and be sure it is delivering adequate dc voltage from adequate ac supply. (c) Give battery a sustaining charge, or repair according to instructions by the battery manufacturer.
	(7) Blown fuse in control circuit, faulty connection or broken wire in control circuit, damaged or dirty contacts on control switch (electrically operated circuit breaker)	(7) Replace blown fuse; repair faulty connection or broken wire; dress or replace damaged contacts or clean dirty contacts in control switch.

Section V-MISCELLANEOUS DEVICES

8-18. Circuit switchers.

Circuit switchers employ SF, puffer-type interrupters for switching and protection of transformers, lines, cables, and capacitor banks, and have fault-interrupting ratings suitable for use in protecting medium- to heavily-loaded transformers. They are used for voltage levels of 34.5 kv and up as an intermediate protective step between less costly fused switch combinations and more expensive circuit breakers. Models are available with and without integral disconnect switches. Operation of circuit switchers is initiated by manually operating the switch; by remote supervisory control equipment; or by relays that automatically sense predetermined system or equipment conditions or electrical failures (faults). Maintenance should use the appropriate requirements for switches and SF, interrupters.

8-19. Automatic circuit reclosers.

Automatic circuit reclosers are self-contained devices for interrupting and automatically reclosing an alternating current circuit during the fault conditions. Reclosers are provided with a predetermined sequence of opening and reclosing, followed by resetting, hold closed, or lockout. They can be used on single-phase or three-phase circuits. Some circuit breakers are provided with reclosing relays and other devices, which act in the same manner as automatic circuit reclosers. Reclosers may be insulated with oil or operate with vacuum or SF, gas bottles, similar to circuit breakers. They may be magnetically or electronically operated:

a. Operation. Keep a record of counter readings, settings, and sequence of operation, in addition to normal maintenance and test data.

(1) *Reclosing after operation to lockout.* First make a complete visual inspection of the recloser for evidence of external damage, such as broken or cracked bushings, or thrown oil. Only after inspection indicates that everything is in order and there is positive evidence that the fault has been removed may the unit be closed again.

(2) *Cold-load pickup.* Excessive currents can occur on circuit re-energization and cause operation of the recloser to lockout. Such currents should be eliminated by following specific operating instructions provided dependent upon the cause of the excessive current.

(a) Inrush currents associated with motor starting, transformers, and the like can cause excessive currents. The duration of this component of cold-load pickup is quite short, a matter of several cycles.

(b) An increase in the load values relative to the previous load values due to loss of diversity of cycling loads (electric heating, air conditioners) can cause excessive currents. The ratio of the post interruption load to pre-interruption load varies with the length of interruption, but can be as high as two. This effect may cause excessive currents to persist for tens of minutes.

(c) Where cold loads cannot be picked up, circuits may be sectionalized to disconnect part of the load, or reclosers may be bypassed temporarily. Nonseries coil reclosers may have special control provisions to allow for the inrush component of cold-

Affordable Wire Management, Exhibit No. EX1010
Case No. IPR2024-00182
Page 114 of 201

load pickup. Never hold the operating lever of series coil reclosers in a closed position in an attempt to pick up cold load.

b. Frequency of maintenance. Provide maintenance after a number of operations, or after a time interval, in accordance with the manufacturer's recommendations, local operating experience, or a combination of these.

(1) *Maintenance based on elapsed time.* Operating service and local conditions influence maintenance frequencies. Inspect initially in accordance with the manufacturer's recommendations. Humidity and temperature can affect the frequency of necessary maintenance. Therefore, a study of maintenance records extending over several years can be helpful in determining proper maintenance schedules on large facilities.

(2) *Maintenance based on number of operations.* Reclosers may be maintained after a certain number of operations, determined from the recloser operation counter readings. A procedure for evaluating useful life of an oil-filled recloser, based on standard duty, is given in ANSI C37.61/IEEE 321, appendix B but is not recommended for use by maintenance personnel.

(3) *Maintenance based on elapsed time and number of operations.* The use of time interval alone does not take into account the frequency and severity of the recloser operations. On the other hand, use of the number of operations alone ignores elapsed time, during which the insulating medium may have deteriorated.

(4) *Suggested frequency. An* industry-suggested method of combining the elapsed time and operation factors is as follows: Maintenance, internal inspection, and testing of reclosers should be performed at 100 operations or every 3 years, whichever occurs first if no better basis can be established.

c. Field inspection. After installation, a recloser should be carefully inspected at the established interval. An inspection should include examining the bushings for cracks, as well as other items recommended by the manufacturer. Inspect oil-insulated unit tanks for leakage. Record the counter reading. Bypass and isolate the recloser by suitable means, if possible, and perform an operating test. Manually operate the recloser several times to the lockout position, by means of a switch stick or other control. Operating tests can disclose possible troubles and do prevent the accumulation of high-resistance oxides on contact surfaces.

d. Maintenance. Give the following items particular attention:

(1) *Oil-insulated unites.* Never assume that new oil is free of moisture. It should be tested for dielectric strength before using, with breakdown across a standard O.l-inch (2.54-millimeter) gap occurring at not less than 26 kilovolts root mean square (rms), the minimum acceptable dielectric strength for new oil. Breakdown at a lower test voltage usually indicates excessive moisture in the oil. Remove any moisture by filtering before the oil is used. Always test the oil before putting back in service a recloser which has been temporarily removed for repair. Replace with clean dry oil if the dielectric strength of the oil is less than 22 kilovolts rms.

(2) *Vacuum interrupting units.* Leaks caused by excessive mechanical strain, insufficiently degassed contact materials, or other causes may decrease the unit's dielectric strength. The dielectric strength of the vacuum gap can be tested with a 60-hertz high-potential test at the manufacturer's recommended voltage.

(a) Adjust vacuum contacts for proper contact opening travel, contact closing overtravel, and contact closing force, according to the manufacturer's recommended procedure.

(b) X-radiat'ion may be produced when vacuum interrupters are energized above maximum rated voltage. Follow the manufacturer's required precautions.

(3) *Units insulated with SF, gas.* Follow the manufacturer's recommendations as to the insulating medium treatment.

(4) *Tests.* Testin accordance with the limits set by the manufacturer and in accordance with ANSI/IEEE C37.60.

(a) Insulation. Aging, moisture, and the sludge deposits can cause insulation on fiber parts and wiring to deteriorate. Test insulation by a 60-hertz high-potential test, by power factor measurement, or by dc insulation tests.

(b) Minimum tripping current. Make a minimum tripping current test to determine that the recloser trips at the proper current value.

(c) Time-current characteristics. Make a time-current characteristic test in accordance with the manufacturer's maintenance manuals and plot to compare with the manufacturer's values. Permissible tolerance from rated characteristics are plus or minus 10 percent of time or current, whichever is greater.

(d) Lockout. Check new or reconditioned reclosers by operating them through their sequence to lockout. The procedure will vary dependent upon the make and type of recloser.

(e) Reset. Check the resetting time of a recloser during the lockout test.

Affordable Wire Management, Exhibit No. EX1010
Case No. IPR2024-00182
Page 115 of 201

CHAPTER 9

OVERVOLTAGE PROTECTION

Section I-CONSIDERATIONS

9-1. Overvoltage protection.

This chapter describes the maintenance and repair of protective devices installed to limit transient over-voltages on lines. Abnormal voltages are caused most frequently by lightning, but system disturbances can also cause damaging voltage surges.

9-2. Lightning-induced voltage surges.

Overhead lines are extremely vulnerable to direct strokes or to induced voltage influences. Underground systems derived from aerial lines may also be affected.

a. Causes. Lightning results from the potential difference between clouds or between a cloud and earth. A lightning stroke may be in direct contact with an electric line and equipment. The charged clouds of a passing lightning storm may also cause an electrostatically induced voltage.

b. Protection. The high voltage of a lightning surge, imposed on lines and devices without surge protection, will flash over the insulation in the majority of cases. Where flashover occurs, through air or on insulators, it rarely causes permanent damage, but flashover occurring through the solid insulation on equipment or cable can result in permanent damage.

9-3. System operating voltage disturbances.

Transferring a system from one operating condition to another may generate a short-time transient overvoltage, known as a switching surge. A line-to-ground fault may increase the line-to-ground voltage of the unfaulted phases. An overvoltage results when resonance occurs from single-pole switching of three-phase circuits. Accidental contact with a higher-voltage system may cause an overvoltage. Forced-current zero interruptions, improperly applied, may cause a high transient voltage. The protective devices discussed for lightning-induced surges will also protect the system from these system-generated over-voltages.

9-4. Surge limiting protective device requirements.

A surge limiting protective device must limit transient over-voltages or surge voltages that could damage apparatus. The device must bypass the surge to ground and discharge severe surge currents of high magnitude and long duration without injury. The device must continuously withstand the rated power voltage for which it is designed. The device's protective ratio is the maximum surge voltage it will discharge, compared to the maximum crest power voltage it will withstand following discharge. Surge arresters provide the most accepted method of surge limiting protection, since they provide the highest degree of surge elimination. Other methods include shielding lines and equipment from direct lightning strokes; and providing devices designed to divert or change the wave form of the surge, such as protective gaps, surge capacitors, and bypass resistors.

Section II-SURGE (LIGHTNING) ARRESTERS

9-5. Definition of a surge arrester.

A surge arrester is a protective device for limiting surge voltages on equipment by discharging or bypassing surge current. Surge arresters allow only minimal flow of the 60-hertz-power current to ground. After the high-frequency lightning surge current has been discharged, a surge arrester, correctly applied, will be capable of repeating its protective function until another surge voltage must be discharged.

9-6. Types of surge arresters.

Surge arresters used for protection of exterior electrical distribution lines will be either of the metal-oxide or gapped silicon-carbide type. Expulsion-type units are no longer used.

a. Metal-oxide type. A metal-oxide surge-arrester (MOSA) utilizing zinc-oxide blocks provides the best performance, as surge voltage conduction starts and stops promptly at a precise voltage level, thereby improving system protection. Failure is reduced, as there is no air gap contamination possibility; but there is always a small value of leakage current present at power frequencies. Therefore, the arrester's maximum power-frequency continuous operating voltage (MCOV) can not be exceeded.

b. Gapped silicon-carbide type. Silicon-carbide has more nonlinearity than zinc-oxide. Without a gap the increase in leakage current, because of this nonlinearity, would soon burn out the arrester. A gap prevents burnout, but it does mean that the arrester will not operate until the gap sparks over.

Affordable Wire Management, Exhibit No. EX1010
Case No. IPR2024-00182
Page 116 of 201

As the sparkover voltage of a gap varies with the atmospheric pressure, the protective characteristics of arresters are affected by the altitude at which they are installed. Standard arresters are considered suitable for altitudes up to 6,000 feet.

c. Selection. Both types do the same job, but the need for selection of higher voltage levels for the silicon-carbide type means the protection is slightly less. When gapped type arrestors fail, consider replacing them with the metal-oxide type.

d. Equivalence. ANSI/IEEE C62.11 provides an MCOV rating and a corresponding duty-cycle voltage rating for MOSA units. The duty-cycle rating is based on the familiar voltage ratings of ANSI/IEEE C62.1, long used for the silicon-carbide design.

9-7. Classification of surge arresters.

ANSI/IEE C62.1 classifies arresters as station, intermediate, distribution, and secondary types. The best (lowest) available protective level and energy-discharging capability is provided by the station type with successively poorer (higher) protection levels for the other classifications. For distribution arresters, ANSI/IEEE C62.11 defines a normal-duty and a heavy-duty type, dependent upon the test severity. Heavy-duty arresters are more durable and generally have lower protective characteristics.

9-8. Maintenance of surge arresters.

Modern surge arresters require little operational maintenance and the degree to which such maintenance can be done is normally limited by lack of adequate test equipment. This limits surge arrester maintenance to visual inspection and simple electrical tests. It is recommended that units found to be defective be replaced rather than repaired: Where an arrester is composed of two or more individually complete units, each unit should be tested separately. Thus, a bad unit may readily be replaced and the good units retained. Surge arresters are almost always applied with one terminal connected to an electrically energized source and one terminal to ground. No work should be done, or contact made with surge arresters, when connected to the energized source.

a. Visual inspections. Visual inspection should be made periodically to ensure that:

(1) The line lead is securely fastened to the line conductor and the arrester.

(2) The ground lead is securely fastened to the arrester terminal and ground.

(3) The arrester housing is clean and free from cracks, chips, or evidence of external flashover.

(4) The arrester is not located in such a manner as to be subject to:

(a) Damaging fumes or vapors.

(b) Excessive dirt or other current-conducting deposits.

(c) Excessive humidity, moisture, dripping water, steam, or salt spray.

(d) Abnormal vibrations or shocks.

(e) Ambient temperatures in excess of 40 degrees C.

(5) Any external gaps are free from foreign objects and set at proper spacings.

b. Electrical tests. Visual inspection will not always detect a damaged arrester. Interior damage may result from a broken element, presence of moisture, a severe direct lightning stroke, or the use of an arrester with an incorrect rating. Sometimes these conditions will cause radio interference. Electrical tests, to detect inferior arrester units, may be made either in the field or shop. Tests must be made strictly in accordance with manufacturer's recommendations, and the results interpreted in line with manufacturer's criteria.

(1) *Power factor tests.* Each type and class of lightning arrester has a specific power factor when new. Periodic testing of a unit will show little deviation from the original (when new) power factor, so long as it remains in good operating condition. A major deviation from the original value indicates that the arrester has been mechanically damaged or contains moisture.

(2) *Megger tests.* A megger test can be made to provide additional information on the condition of an arrester. Such a test may indicate shorted valve elements in valve-type arresters.

(3) *Operation tests.* Electrical tests to determine 60-hertz breakdown and leakage current may be made in the field or shop, but must be made cautiously so as to avoid damage to the arrester. It is questionable whether these tests can be justified for military installations, where the number of arresters potentially subject to such tests is relatively small.

Section III-OTHER DEVICES

9-9. Surge shielding devices.

Shielding devices, such as lightning rods (air terminals), lightning masts, and overhead ground wires, are installed for the purpose of diverting lightning strokes from structures and equipment where more than surge arrester protection is justified.

a. Maintenance. Maintenance should ensure proper ground connections having minimal resistance. All supports and device clamps used in the

Affordable Wire Management, Exhibit No. EX1010
Case No. IPR2024-00182
Page 117 of 201

shielding installation should be checked for rigidity, as insecure mountings may cause a mechanical failure. Periodically inspect the structures to ascertain that shielding devices have not been seriously damaged by previous discharges.

b. Construction. Copper, copper-clad steel, galvanized steel, or a corrosion-resistant metal alloy are all materials used in the construction of shielding devices.

9-10. Surge capacitors.

Surge capacitors are wave-shaping devices which produce a change in the lightning surge's waveform after it is imposed on an electrical system.

a. Use. In general, a surge capacitor is connected in parallel with a surge arrester for protection of the turn-to-turn insulation of rotating machinery, such as motors and generators.

b. Maintenance. See chapter 13 for capacitor maintenance.

9-11. Surge protective gaps.

Protective gaps (sometimes referred to as rod gaps) normally consist of two electrodes, spaced in the air at a specific distance, with one electrode connected to ground and the second electrode to the line potential. Electrodes may be of various sizes and shapes and are generally made of conventional lightning rod material.

a. Application. Protective gaps may be installed on substation structures in conjunction with line switches, or as an integral part of equipment bushings. The spacing between the electrodes is based on coordination of the protective characteristics of the gaps with other protective devices in a station. On some installations, gaps may serve as the primary surge protective device.

b. Maintenance. Protective gaps are installed with a specific separation between the electrodes. Severe electrode burning, resulting from lightning or system overvoltage discharges, may require a readjustment of gap spacing. Maintain proper spacing and keep electrodes free from burrs and sharp protrusions.

9-12. Surge bypass resistors.

A bypass resistor is a device containing nonlinear resistance material, in which the current varies as a power of the applied voltage. When a surge voltage occurs, the resistance of this device is decreased to divert the surge current around the protected winding.

a. Application. Bypass resistors are normally applied for the protection of turn-to-turn insulation of series-connected windings in such apparatus as regulators, autotransformers, and reactors. Bypass resistors are also useful to reduce switching surges on transmission lines, where the substantial surge reduction provided outweighs their cost.

b. Maintenance. If bypass resistors are mounted in air, any accumulation of dust particles between resistance elements should be removed periodically using dry compressed air. Proper clearances must be maintained to allow for free air circulation.

Affordable Wire Management, Exhibit No. EX1010
Case No. IPR2024-00182
Page 118 of 201

CHAPTER 10

GROUNDING

Section I—CONSIDERATIONS

10-1. Basic principles of grounding.

Grounding is provided to limit potential (voltage) differences to values that will not cause undue hazards to personnel and equipment. A ground system which provides adequate current-carrying capacity and a low-resistance path to an earthing connection will dissipate, isolate, or disconnect overpotential areas resulting from fault overcurrents or surge overvoltages. A ground path can consist of single or multiple conductors whose connection provides adequate thermal and conductance capacities. The earthing connection is generally a metallic electrode such as a rod, a water pipe, a counterpoise, or a ground grid system installed below grade.

a. Electrode resistance. The resistance of a ground electrode is primarily determined by the earth surrounding the electrode. Test data given in IEEE *142* indicate that about 90 percent of the total resistance of a ground lies within 6 to 10 feet (1.8 to 3 meters) from the electrode. The diameter of the rod has only a negligible effect on the resistance of a ground. The resistance of the soil is dependent upon the type of soil and its moisture content. Electrodes should be long enough to penetrate a relatively permanent moisture level and should extend well below the frost line.

b. Factors which can degrade initial good grounds. Tests should always be made at times when the surrounding soil can be expected to have the least moisture. The following factors indicate the importance of continuous periodic testing of grounding systems.

(1) Water tab1es are gradually falling in many areas.

(2) There are more underground installations of nonmetallic pipes and conduits, which do not provide low-resistance ground connections.

(3) Electric systems are continually expanding with an associated fault current increase which may require a decrease in grounding resistance.

(4) Corroded connections may increase the resistance.

1O-2. Grounding provisions.

Maintenance personnel deal with two types of grounding systems: permanent and temporary.

a. Permanent grounding systems. Permanent grounding is provided for the efficient, effective, safe operation of electrical power systems.

(1) *Safety.* Equipment grounding, which is the grounding of all exposed or accessible noncurrent-carrying parts of electrical devices and equipment, reduces the hazards of contact by personnel.

(2) *System operation.* System grounding, which is the grounding of one conductor point on an electrical circuit, stabilizes the voltages to protect the equipment and provides a basis for adequate protective relaying.

b. Temporary grounding. Temporary grounding is the personal protective grounding, which is provided to protect persons engaged in de-energized electric line maintenance.

Section II-MAINTENANCE

1O-3. Grounding maintenance safety.

Extreme care must be exercised in inspecting, maintaining and testing grounds and ground systerns. Never open a grounding connection unless the connected equipment is deenergized, or an adequate safety bypass is provided. Always wear rubber gloves and follow facility safety manual procedures. This applies equally to grounds installed on structural or supporting members, ground connections to equipment enclosures, and neutral grounds of primary or secondary systems. The life and safety of those in the vicinity of electrical facilities depend on how carefully and completely inspections and maintenance of grounds and grounding systems are performed.

10-4. Visual inspection of grounds.

Visual inspection of ground connections to equipment, equipment enclosures, structural members, fencing, and system neutrals should be made at least every 2 years. More frequent inspections should be made where appropriate to the system's size and importance. Loose, broken, or missing connections should be repaired or replaced as required. Connections or connectors showing signs of overheating, as evidenced by discolorations, should be reported, as this may be the result of an improper application or installation. If connections are found to be corroded or rusted, they should be cleaned and corrective measures should be taken to prevent a recurrence of this situation. Excessive amounts of

Affordable Wire Management, Exhibit No. EX1010
Case No. IPR2024-00182
Page 119 of 201

corrosion should be reported, as this may indicate the need for cathodic protection in the area.

10-5. Galvanic corrosion of grounds.

The use of dissimilar metals embedded in the earth in and around generating stations and substations results in the formation of a huge galvanic cell. Steel or galvanized structures, including conduits, cable sheaths, pipes, and structural footings, where used either purposely or inadvertently in the ground system, are subject to galvanic corrosion. Attention should be given to the necessity of providing corrosion mitigation measures under such circumstances.

a. Stainless steel ground rods. Do not use stainless steel ground rods. Their performance can be unpredictable because of their tendency toward localized corrosion.

b. Underground pipe lines. The bonding of interior metallic pipelines to an electrical system's ground provisions of copper (which is required by code) if done incorrectly, can result in galvanic corrosion of the underground pipeline. Installation of a dielectrically-insulated fitting on the pipe above ground, and before the copper ground connection, will eliminate the earth's electrolytic coupling between the underground cable and the ground wire.

Section III-TESTING

10-6. Ground resistance tests.

In addition to visual inspections of grounding systems and connections, resistance measurements will be made periodically to determine whether there is any trend toward an increase in the ground resistance of an installation. Maximum permissible resistance for grounds and grounding systems will be in accordance with departmental standards, ANSI C2, or the National Electrical Safety Code, whichever is lower.

a. ANSI C2 *requirements. No* specific ground resistance is given, except that a single-grounded, individually-made electrode, with a ground resistance exceeding 25 ohms, requires two parallel and interconnected electrodes. Supply stations (dependent upon size) require an extensive grounding system, consisting of either multiple buried conductors or electrodes or both, to limit touch, step, mesh, and transferred potentials in accordance with industry practices. All grounding systems must be designed to minimize hazard to personnel and have resistances low enough to permit prompt operation of circuit protective devices.

b. Departmental standards. Departmental standards will require values ranging from 1 ohm up to a maximum of 25 ohms depending on the size of the system.

c. Measurement records. Continuous records will be kept for all grounding installations, which require a ground resistance of 10 ohms or less, to verify that design resistances are still being provided.

1O-7. Ground value measurements.

The following ground resistance measurements should be made in order to ensure safe operating practices.

a. Measure the ground path resistance of all branches of the grounding system from the point of connection, on the structure, equipment enclosure, or neutral conductor, to the earthing connection. The earthing connection may be the top of a single ground rod, a water pipe, a counterpoise, or a ground grid.

b. Measure the resistance of the earthing connection whether it is a ground rod, a water pipe, a counterpoise, or a ground grid to the earth itself.

c. Wherever the total resistance of the total ground circuit is in excess of the values established, measure resistance of individual portions of the circuit to determine the point or points where resistance is excessive and corrective action can be taken.

d. Measure resistance between gates and gateposts to ensure that flexible ground connections are adequate. Resistance higher than one-half ohm indicates a deficiency.

e. Measure resistance between operating rods and handles of group-operated switches and the supporting structure to determine that the flexible connections are adequate. Resistance higher than one-half ohm indicates a deficiency.

f. Measure resistance of all bonds between metallic-cable sheathing and its ground path. Resistance higher than one-half ohm indicates a deficiency.

g. Testing of grounds may create hazardous conditions if care is not exercised. Fault or surge currents can build up dangerous voltages between the point of equipment ground connection and the point of the earthing connection. Rubber gloves, blankets, and such are recommended for the protection of personnel. Ground resistance measurements should never be attempted during lightning storms.

10-8. Methods of measuring ground resistances.

All methods of measuring ground resistance are similar in that a suitable source of current is neces-

Affordable Wire Management, Exhibit No. EX1010
Case No. IPR2024-00182
Page 120 of 201

sary. Auxiliary reference grounds and test instruments are necessary for ANSI/IEEE 80 and ANSI/IEEE 81 methods.

a. Minor grounding installations. The following methods are suitable for measuring the resistance of isolated ground rods or small grounding installations. Precision in measurements is difficult to obtain. Normally an accuracy of 25 percent is sufficient, since the surrounding soil will not have consistent values of temperature, moisture, and depth.

(1) *Portable ground testing instruments.* A usual way to measure the ground resistance is with a low-range, self-contained, portable earth-tester instrument such as the "Megger" Ground Tester or Ground Ohmer. The manufacturers' instructions should be followed in the use of this instrument. The two most common methods of measuring the ground resistance with this type of instrument are the direct-reference or two-point method shown in figure 10-l and the auxiliary ground method shown in figure *10-2.*

(2) *Three-point method.* The three-point method of measuring ground resistance requires two auxiliary grounds, similar to those required with portable ground testing equipment, except that each auxiliary ground should have a resistance approximately equal to the ground being tested. This arrangement is shown in figure 10-3. The ground rods should be driven 8 to 10 feet (2.5 to 3 meters) into the earth and spaced not less than 50 feet (15 meters) apart. Three separate tests are made to determine the resistance of each of the series circuits when composed of only two grounds. The unknown resistance may then be calculated as follows by equation 10-l.

$$R_A = \frac{R_1 + R_2 - R_3}{2} \qquad \text{(eq. 10-l)}$$

Actual resistances may be determined by using one of the following methods.

(a) AC voltmeter-ammeter method. The connections for the ac voltmeter-ammeter test are shown in figure 10-3. The resistances of the ground circuits are determined from the meter readings and these values are then used in calculating R_A. Stray alternating currents of the same frequency as the test current, if present, will introduce some error in measurements.

(b) DC voltmeter-ammeter method. A dc voltmeter-ammeter method may also be used to determine the resistance of each pair of grounds in series. Like the ac method, it is limited to locations where power is available or where a battery source may be used with the regulating apparatus required to control the current flow. The line supply-

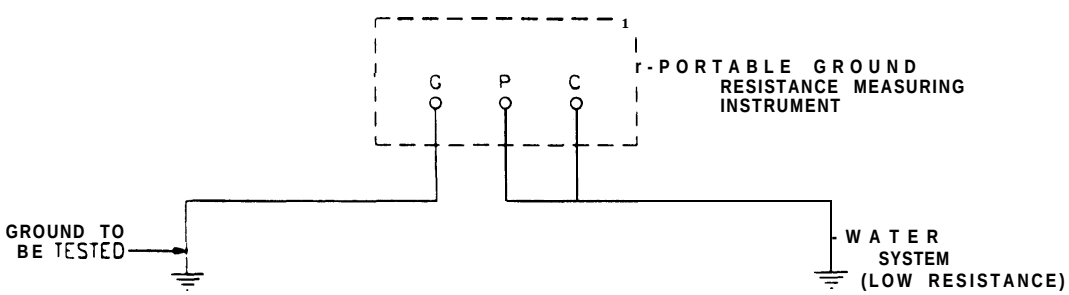

Figure 10-l. Direct-reference or two-point ground test

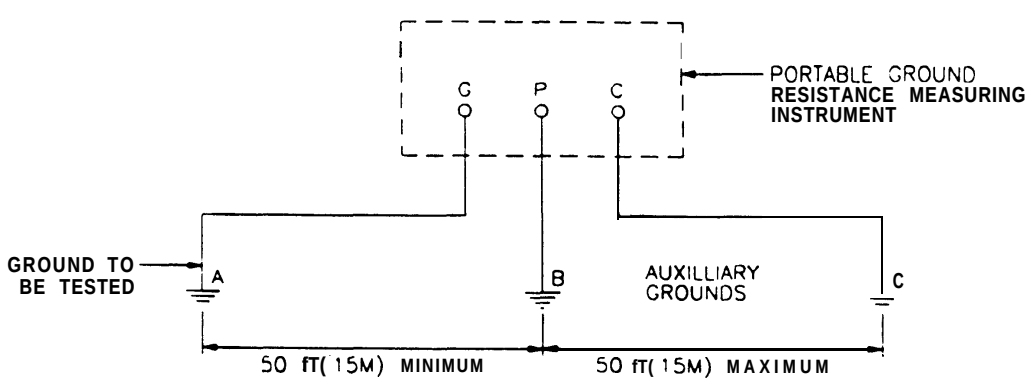

Figure 10-2. Auxiliary ground method

Affordable Wire Management, Exhibit No. EX1010
Case No. IPR2024-00182
Page 121 of 201

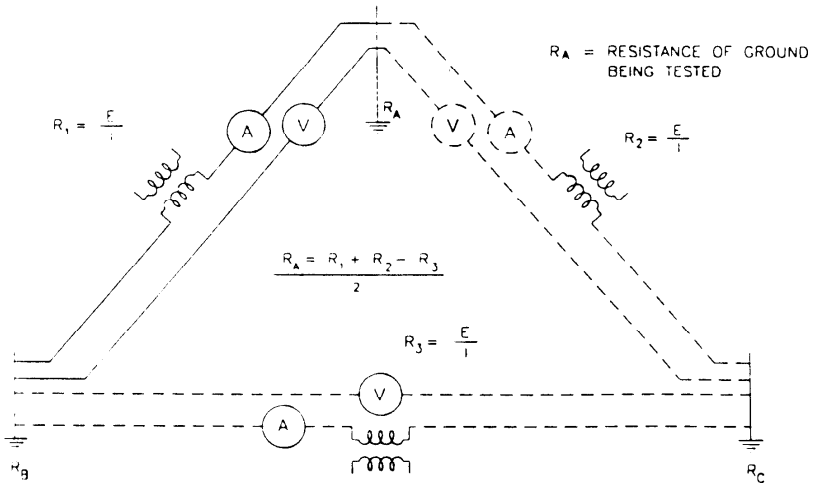

Figure 10-3. Ground resistance measurement, three-point method

ing the current must be free from grounds to minimize the effect of cross-currents. To compensate for the effect of stray dc voltage currents in the area, readings should be made at both polarities.

b. Major grounding installations. Where accurate measurements of extensive low-resistance grounding systems are required, more elaborate test methods and equipment are needed using considerably larger separation distances between test electrodes. Normally large facility substations are tested with the fall-of-potential method in accordance with ANSI/IEEE 81 requirements. Figure 10-4 shows a field setup for this method and the ground resistance curve. The resistance shown on the flat part of the curve is taken as the resistance of the ground. The self-contained earth tester instrument shown should be used rather than a voltmeter-ammeter combination, as the earth tester is designed to eliminate the effects of stray currents. The primary advantage of this method is that potential and current electrodes (probes) may have substantially higher resistance than the ground system being tested without significantly affecting the accuracy of the measurement.

(1) *Major substations.* To allow for seasonal variations it is recommended that tests be made at the same time each year or for each season of the year to allow for accurate comparison.

(2) *Procedures.* Tests should be performed in accordance with written procedures. Provide adequate safety precautions as all electrical conducting paths for overvoltage and fault currents are connected to the substation grid.

10-9. Method of reducing ground resistances.

Ground tests may indicate that the ground resistance exceeds safety requirements. Adding rods, increasing rod lengths, soil treatment, or a combination of these methods may be necessary. Also see IEEE 142 for additional information on the effect of these changes.

a. Adding rods. An easy and preferable method of reducing the resistance is to provide more rods. For example, two ground rods, properly spaced and connected in parallel, should have a combined resistance on the order of 60 percent of the resistance of one rod; and for three rods, 40 percent of that resistance. In general, proper spacing of rods means placing rods at least one rod length apart.

b. Increased rod length. Providing longer rods is particularly effective where low-resistance soils are too far below the surface to be reached with the normal rod lengths of 8 to 10 feet (2.5 to 3 meters). The amount of improvement from longer rods depends on the depth of the low-resistance soils. A rather sharp decrease in the measured resistance is usually noticed where the rod has been driven to a low-resistance soil level. Soil resistivity usually (but not always) decreases with depth because there is normally an increased moisture content.

c. Soil treatment. A method called salting has traditionally been used to treat the soil around ground rods.

(1) Sodium chloride, calcium chloride, magnesium, and copper sulfate are all used as treatment. Bentonite, a natural clay, works well, except in a very dry environment. A pre-packaged mixture of 75 percent gypsum, 20 percent bentonite, a 5 percent sodium sulfate. is recommended. Ground rods can also be encapsulated in concrete rather than using a soil treatment.

(2) Soil treatment is a reliable and effective method for reducing ground resistance and is particularly suitable for improving a high-resistance soil. The treatment is advantageous where long rods are impractical because of rock strata or other

Affordable Wire Management, Exhibit No. EX1010
Case No. IPR2024-00182
Page 122 of 201

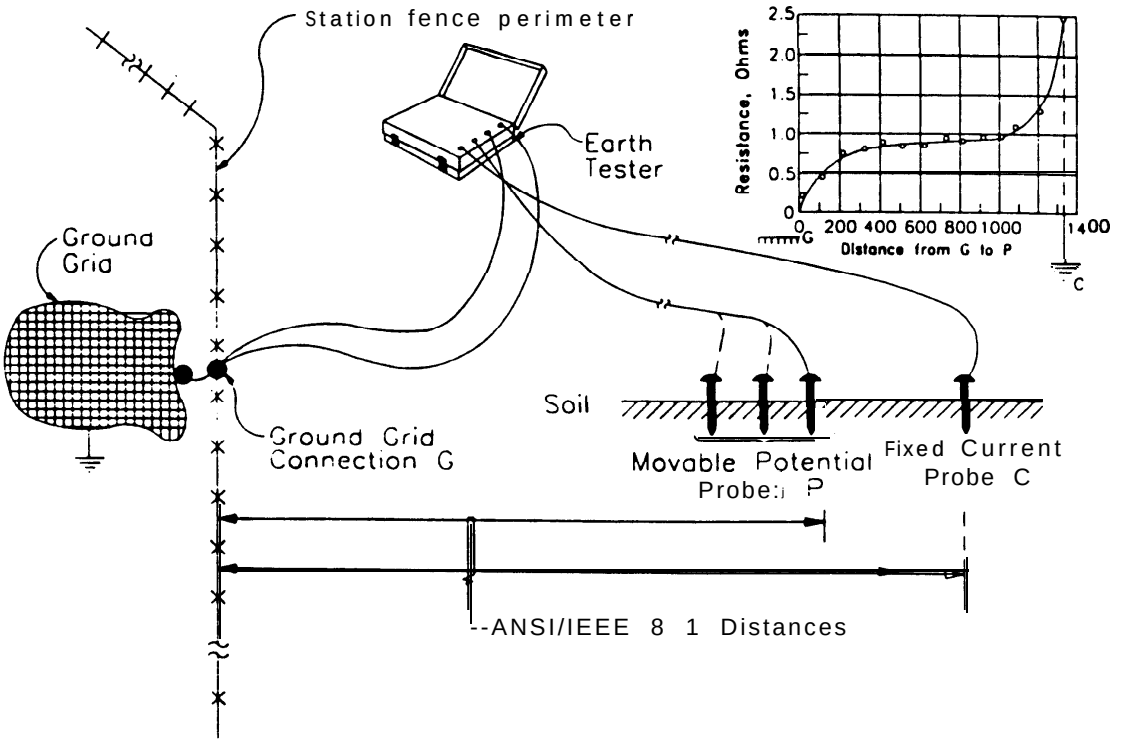

Figure 10-4. Field setup and curve for fall-of-potential method

obstructions to deep driving. There are two practical ways of accomplishing this as shown in figure 10-5. Where space is limited, a length of tile pipe is sunk into the ground a few inches (millimeters) from the ground rod and filled to within approximately 1 foot (0.3 meters) of the ground level with the treating chemical. The second method is applicable where a circular or semicircular trench can be dug around the ground rod to hold the chemical. The chemical must be kept several inches (millimeters) away from direct contact with the ground rod to avoid corrosion of the rod. The first treatment usually requires 50 to 100 pounds (22 to 45 kilograms) of material and will retain its effectiveness for 2 to 3 years. Each replenishment of the chemical extends its effectiveness for a longer period, thus increasing treatment intervals. To start the action promptly, the first treatment of chemical should be flooded.

d. Specialized rods. In lieu of adding additional rods or lengthening rods, a copper tubing grounding system can be used. There is an Underwriters-listed grounding system that uses a 2-inch (50-millimeter) copper tube filled with metallic salts and available in various lengths. Since this method uses metallic salts it is not recommended except as a last resort. The tube is also available as a straight unit, or in an L-shaped configuration which allows the tube to be installed on its side in a shallow trench. Changes in atmospheric pressure "pump" air through the breather holes at the top of the tube. Moisture in the air condenses inside the tube to move slowly down through the bed of metallic salts, providing a self-maintaining low-resistance system with a much greater life expectancy than conventional ground rods.

e. Combination methods. A combination of methods may be advantageous and necessary to provide the desired ground resistance. Adding specialized rods or a combination of multiple rods and soil treatment may be effective. Multiple of longer rods are effective where conditions permit this type of installation.

Affordable Wire Management, Exhibit No. EX1010
Case No. IPR2024-00182
Page 123 of 201

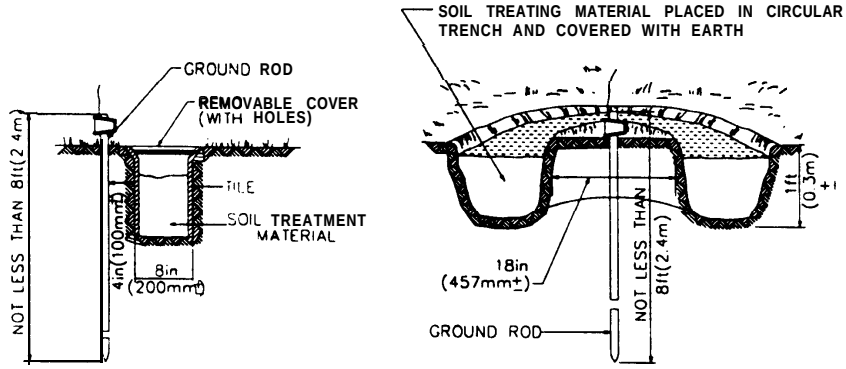

a. CONTAINER METHOD

b. TRENCH METHOD

Figure 10-5. Methods of soil treatment for lowering of ground resistance

CHAPTER 11

RELAYS AND CONTROLS

Section I-RELAYS, ELECTRIC POWER APPARATUS

11-1. Relay functions.

A relay is an electric device designed to interpret input data in a prescribed manner. When specific input conditions occur, the relay responds to cause contact operation or a similar sudden change in associated electric control circuits.

a. Electric power apparatus relays. This section describes electric power apparatus relays and relay systems which are designed to operate circuit breakers and contactors, usually medium-voltage units. Relays can be set more precisely than fuses. Relays are adjustable with respect to both time and current, a feature that also applies to solid-state, direct-tripping, low-voltage circuit breakers.

b. Input data. Input data analyzed is usually electrical, but may be mechanical or thermal, or evaluate other conditions or a combination of conditions. Electrical conditions can be overcurrent, overvoltage or under-voltage, a combination of current and voltage, current balance, direction of current flow, frequency, impedance, or other electrical data.

c. Industrial control relays. Relays of the type designed primarily for industrial control, for switching of communication or other low-level signals, or for any other equipment not controlling electric power apparatus are described in the CONTROLS section of this chapter.

11-2. Relay fundamentals.

Electric power apparatus relays operate to quickly sense problems and speedily isolate power systems under fault conditions. Such an action limits the extent of electrical equipment damage and provides a means to limit outage periods. Their definition, classification, and functional use in electrical power systems are defined by industry standards, prepared and coordinated by IEEE. Maintenance personnel should be familiar with these standards. IEEE also provides recommended selection and application practices, which are used by engineers designing military facilities.

a. Classification: Relays can be classified by functions, input operating principals, and performance characteristics. ANSI/IEEE C37.90 covers classifications of relays and also standard service conditions, ratings, tests, and temperature rise.

(1) *Functions.* Relays are classified according to their primary purposes, which are protective, regulating, monitoring, programming, and auxiliary control. Some relays may qualify for more than one classification, depending on their application.

(2) *Inputs.* This classification has to do with the input to which the relay responds such as current or voltage.

(3) *Operating principles.* This classification identifies the relay's operating principles or structural features, such as electromechanical or solid-state types.

(4) *Performance characteristics.* Relays are selected to perform certain functions. To standardize on reference use, they are given device function numbers by IEEE C37.2. (Device function numbers also describe other electrical power apparatus equipment in addition to relays.) Device function numbers readily identify devices in drawings, diagrams, instruction books, publications and specifications. The use of "52" for circuit breakers, "51" for an ac time overcurrent relay, "65" for a governor, and "86" for a lockout relay provides a simple brief method of designation of the device's operational performance. The standard also covers suffix letters used for main devices (such as "N" for neutral), actuating qualities (such as "A" for amperes), auxiliary devices (such as "CS" for control service), operating device components (such as "TC" for trip coil), and auxiliary contact positions (such as "a" and "b", "aa" and "bb"). Familiarity with this standard, including typical elementary diagrams, will help in understanding device operations.

11-3. Relay construction.

All relays operate in response to one or more electrical or physical quantities to open or close contacts or trigger power electronic devices, such as thyristors. Relays will generally be of the electromechanical or solid-state type.

a. Electromechanical relays. These relays have been used for years and provide simplicity, reliability, security, low-maintenance, and long life. Basic units are constructed to respond instantaneously or with a time-delay to the actuating quantity.

(1) *Instantaneous units.* Instantaneous units act on an electromagnetic attraction operating principle wherein a plunger, solenoid, hinged armature, or balance-beam is pulled into a coil or pole face of an electromagnet. They can be used in both ac and dc power systems.

Affordable Wire Management, Exhibit No. EX1010
Case No. IPR2024-00182
Page 125 of 201

(2) *Time-delay units.* Time-delay units act on an electromagnetic induction operating principle, whereby torque is developed in a movable rotor (disc or cup) which rotates between two faces of an electromagnet. These units can only be used in ac circuits. Time overcurrent and time under/overvoltage relays are generally of the disc design type, while high-speed overcurrent, directional, differential, and distance relays are more often of the cup (cylinder) design type.

b. Solid-state relays. Solid-state relays are extremely fast in their operation, as they have no moving parts. Other advantages are lower burden, high seismic-withstand, and reduced panel space. Many are programmable, allowing increased choices of time-current characteristics.

c. Usage. There are no formal statistics available, but one manufacturer estimates that 40 to 50 percent of their relays sold in 1992 were solid-state units. By the year 2000, this manufacturer estimates that of their total relay sales 85 to 95 percent will be the solid-state type. Solid-state relays require no preventive maintenance, but they do require a periodic maintenance check.

11-4. Relay maintenance periods.

Frequency of maintenance should be such as to reveal any possibilities of failure. Maintenance records will disclose trends which might lead to such failures.

a. Test considerations. Tests should simulate normal operating conditions. Avoid overtesting because such tests can often cause more problems than they correct. Consider the variables that can cause problems, such as relay complexity, environment, history, and facility relay-type experience. Other considerations are relay age and relay stress (relays operated at greater currents and/or control voltages because of station expansions).

b. Frequency. Inspections made every 2 to 3 years is usually sufficient. Testing may be necessary after a relay operation. Visual inspections of the target should be made any time other area visual inspections are required. Relay settings should be checked at least once a year and after any incorrect operation or redesign of the system. These inspections, supplemented by suitable tests, should be thorough enough to detect any faulty relays, settings, or wiring errors before trouble is encountered.

11-5. Relay general field inspection.

Relays should be completely disconnected from any live circuit when they are inspected or tested. Only specially trained electricians should be permitted to repair and adjust relays. The manufacturer's instructions should be checked for the proper procedures. Major repairs and testing should be conducted in a facility's testing laboratory, or by contract personnel with access to any special testing equipment needed.

a. Electromechanical relays. Check contacts, moving parts, connections, and the case and covers of these relays.

(1) *Contacts.* Contacts must be kept clean. A flexible burnishing tool should be used for cleaning silver contacts. Silver contacts should not be cleaned with knives, files, abrasive paper or cloth, as these items may leave scratches which can increase arcing and hasten deterioration of the contacts. Abrasive paper or cloth may, in addition, leave minute particles or insulating abrasive material in the contacts, and thus prevent closing. Contact wipe and resistance are important in all relays and should be checked as part of the maintenance procedure. Contact resistance can be determined by using an ohmmeter. Where this resistance depends on springs, the contact pressure should be checked using a spring gage. High resistance of such contacts may indicate insufficient spring pressure, which will require replacement of the spring. The relay must be deenergized and disconnected when the contacts are tested.

(2) *Moving parts.* It is important that all moving parts operate smoothly, so keep all bearings, shafts, linkages, and other moving parts free and clear of dirt *or* gum. Relays normally require oiling only when replacing a jewel, shaft, or moving part. Too much lubrication of these parts can lead to serious troubles and should be avoided. The relay disks should be cleaned with a thin brass or bronze magnet cleaner having a steel edge or insert. Relays should be quiet when operating. A noisy relay should be checked for loose parts or excessive play, and corrective measures should be taken.

(3) *Connections.* Relay connections should be thoroughly checked as part of the maintenance inspection. Check all screws and nuts for tightness. Check the relays, and as much of the circuitry as possible, for continuity, grounds, and shorts.

(4) *Case and cover.* To prevent dirt from entering the case, ensure there is a tight seal between the relay cover and its gasket. Any dust or dirt within the case should be brushed, blown, or vacuumed out. Care should be taken that dirt is not blown deeper into the relay necessitating removal and overhaul of the relay.

b. Solid-state relays. Many solid-state relays have easy-to-use built-in operational test diagnostics. Calibration tests are made in the conventional manner. Maintenance is generally not required, in the usual sense of adjusting, cleaning, or lubricating. Check external connections. It may be neces-

Affordable Wire Management, Exhibit No. EX1010
Case No. IPR2024-00182
Page 126 of 201

sary to disassemble the relay. It is very important to follow the manufacturer's printed procedures. Replacement parts are available, but their use is not recommended. Printed circuit boards are easily damaged. Direct replacement does not necessarily mean the relay will operate properly, without further calibration or verification. When more than inspection and operating checks are necessary, it is recommended that the relay be returned to the manufacturer.

11-6. Relay performance tests.

These tests are usually provided for equipment acceptance, but may be necessary if the relay is completely replaced.

a. Operational checks. Before returning a relay to service, test the complete wiring installation for continuity and operate the relay contacts, preferably by test current, to ensure that everything is in order for the intended function. Any changes in the relay calibration, or needed adjustments should be made at this time. Normally adjustments in the relay settings will not be necessary, but proof checks must be made. Manufacturers' instruction books should also be checked to determine the proper procedure and test equipment required for specific relays. In some cases, the relay may have to be removed and inspected in a laboratory.

b. Directional test. Where directional relays are used, an overall test should be made to ensure that they operate in the proper direction.

c. Dielectric test. When dielectric or insulation tests are made, they should be performed on the complete installation or on all the component parts. For relays rated up to 6000 volts, the test should be made at twice rated voltage plus 1000 volts (with a minimum of 1500 volts ac for one minute).

d. Calibration and performance tests. Some of the tests that are run on the more common relays are shown herein. In addition, the manufacturer's instruction book should be checked for proper testing procedure of a specific relay. The time between tests will be determined by installation conditions and changes in the system. Regularly scheduled tests should be supplemented by special tests, made at any time protective equipment damage is suspected and while protected equipment is out of service.

11-7. Common electromechanical relay tests.

Always follow the manufacturer's instruction manual for tests and checks. The following information provides generalized test connections for the most common type relays used on military installations. Actual test connections may be more complex.

a. Overcurrent relays. Overcurrent relays are the relays most often used. They provide either primary line protection, or backup protection when more complex relays are used for primary protection to provide additional reliability.

(1) *Nondirectional units.* Nondirectional overcurrent relays should be tested at several points on the timecurrent curve, allowing suitable intervals between tests for cooling. Measure the reset time and minimum operating current. Check instantaneous element for pickup and contact action at high and low currents. Caution should be exercised so as not to "burn up" the relay when testing on high currents, or continuously testing at lower currents. Test connections for overcurrent relays are shown in figure 11-l.

(2) *Directional overcurrent relay.* Check the overcurrent element in the same manner as for a nondirectional overcurrent relay. Before testing the overcurrent element, verify the operation of the directional element by simulated fault currents and voltages. Check the minimum operating current of the overcurrent element at normal voltage, and check the contact gap spacing of the directional element. For typical test connections, see figure 11-2.

b. Differential relays. Figure 11-3 shows a typical test connection for a percentage differential type. Check the minimum operating values at zero restraining current and the operating points at several values of restraint. The slope (differential characteristic) and, where applicable, the harmonic restraint feature should also be checked. It may be desirable to trip all circuit breakers from differential relays as a regular testing procedure.

c. Distance relays. Check currents and phase angles, angle of maximum torque, and directional characteristics. Test operating sequences, including time, contact resistances, and relay reach, at various load power factors and settings. Figure 11-4

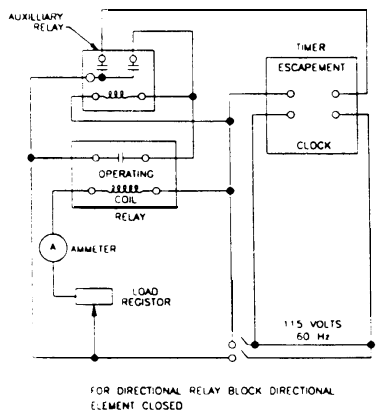

Figure 11-l. Typical test connection for a nondirectional overcurrent relay

Affordable Wire Management, Exhibit No. EX1010
Case No. IPR2024-00182
Page 127 of 201

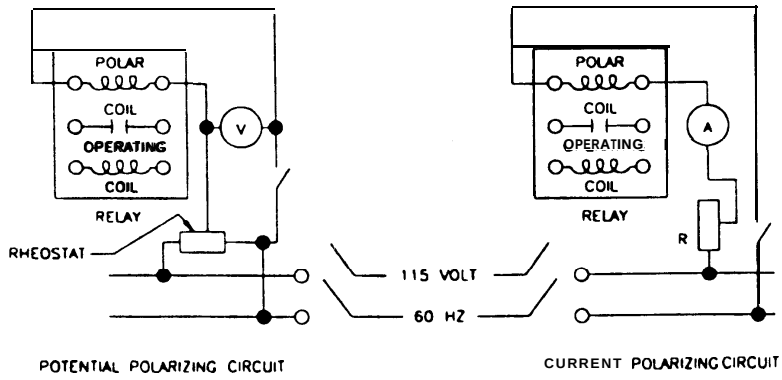

Figure 11-2. Typical test connections for directional overcurrent relays

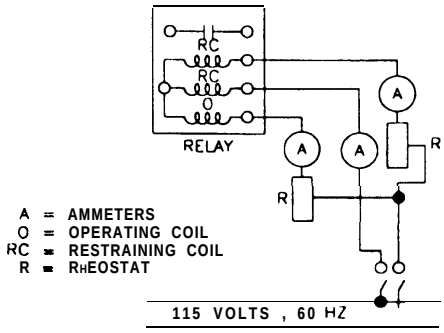

Figure 113. Typical test connections for a differential relay

shows a typical test connection for reactance relays. Substitute a resistor for the reactor when checking the polarity of impedance distance relays.

d. Pilot wire relays. Test the relay for minimum pickup, operating time, and restraint torque. Check the circuits for continuity and reversed connections. An overall test should be made to check the complete installation, including the pilot circuits and external devices associated with the installation. For test connections, see figure 11-5.

e. Synchronism check relays. Check the timing, polarity, and phase angle (closing).

f. Reclosing relays. Check the complete timing and reclosing sequence. Test initial and delayed reclosures and observe switches and moving parts.

g. Plunger and hinged armature relays. Check the relay pickup and drop-out values by gradually increasing or decreasing the operating current or voltage.

h. Thermal relays. Test for thermal pickup current with the relay hot and check the pickup of the instantaneous unit.

11-8. Relay test equipment.

Before testing minimize potential trouble by advance preparation.

a. Advance field testing preparation. Study system protection, including station single lines and relay instruction books. Obtain and review previous tests and arrange to have all required test equipment. Check that outage requests, switching arrangements, and any remote operations have been scheduled.

b. Field test equipment. The test equipment for field testing must be portable, so tests can be made at the relay panel. For most of the common relays, the following will be needed: a variable voltage autotransformer, a multirange ac and dc voltmeter, a multirange ac and dc ammeter, an ohmmeter, auxiliary current transformers, a timer, a three-phase shifter, and auxiliary relays. Test plugs, leads, noninductive resistors, and a relay tool kit will also be required. In general, most laboratory test equipment is portable and can be used in the field. Test instruments are available in prepackaged test sets. The use of these sets simplifies testing.

c. Laboratory testing. If the field testing indicates that a relay needs a shop repair, then engineering evaluation is necessary in determining what effect its removal will have on the reliability of the protective system. Short time removals of one phase of three-phase protective items, switching to alternate power sources, or a replacement relay with correct settings may be necessary. Such judgment should be made as a part of the advance field testing preparation.

d. Laboratory test equipment. Some of the common test equipment that should be available in a laboratory for servicing relays is shown in table 11-l. In addition to these devices, a relay tool kit, test plugs, test leads, printed circuit board extenders, a frequency generator, ac and dc power supplies, a portable test unit, an oscillograph, a power amplifier, and special equipment testers, as required for certain types of relays, will be needed. When selecting types and outputs of test equipment, consideration should be given to the various

Affordable Wire Management, Exhibit No. EX1010
Case No. IPR2024-00182
Page 128 of 201

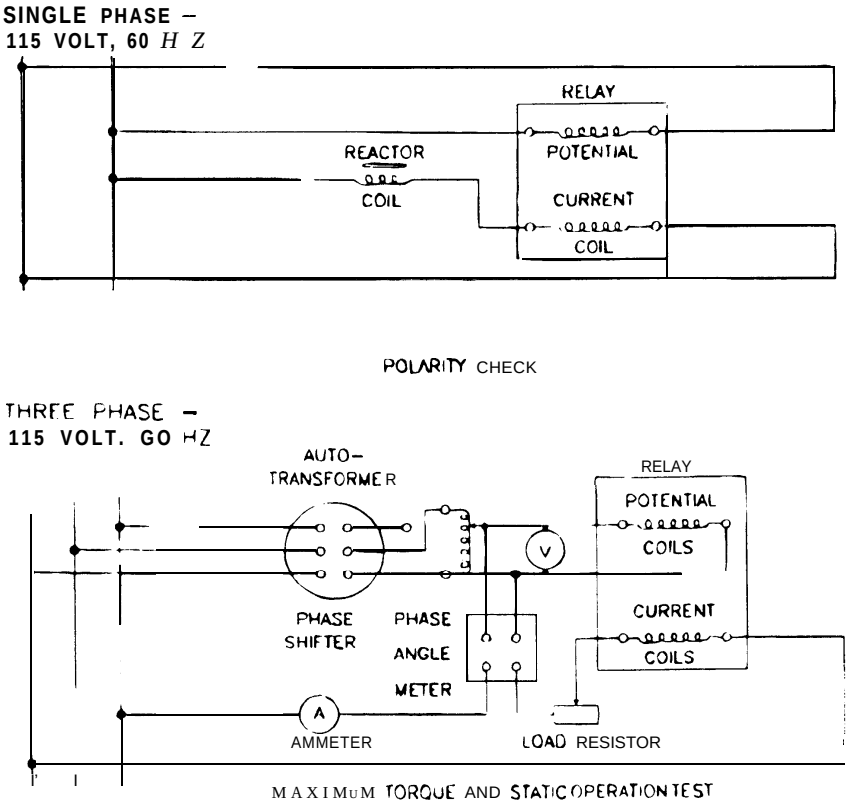

Figure 11-4. Typical test connections for reactance distance relays

types and operating requirements of the relays and associated equipment to be tested in a particular facility.

11-9. Relay repairs.

Relay repairs requiring considerable test equipment and special tools should be conducted in the laboratory or shop. Minor repairs, generally classified as field repairs, can be done at the relay location. Always consult the manufacturer's relay instruction book before any repairs are made.

a. Field repairs. In most relays, contact and gasket replacement, case, cover, and some bearing repairs can be done at the relay panel. Often, a relay may have to be removed to get at the part needing repairs. Modern relays can be readily removed from the case thus facilitating field repairs. After repairs have been made, it may be necessary to make minor adjustments to ensure that the relay settings are correct. The manufacturer's relay instructions should be followed as to the procedure and test equipment required.

b. Shop repairs. Relays that require major repairs, such as overhauling electromagnets, tap blocks, bearings, shafts, or clutch and torque adjustments, should be worked on in a shop where adequate tools and testing facilities are provided. Before removal of any parts, the manufacturer's instructions should be checked for the proper procedures.

c. Overhauling. Exercise care in overhauling, as relays are easily damaged. There are a wide variety of relays with many complicated and delicate parts and it is impractical to list all the details that should be checked. Consult and follow the manufacturer's instruction and parts manual for the specific style of the relay being overhauled. Relays should be thoroughly cleaned at the time of overhaul. Test taps and tap blocks if coils are replaced. Where required repairs are extensive, return the relays to the factory.

d. Adjustments. After the overhaul, various adjustments and alignments are required. Adjustment must be coordinated with other protective devices, as provided by a relay coordination analysis. The manufacturer's instruction manual should be referred to for the proper procedure. A few of the more important items that will require checking include shaft end play, contact gap, and torque and clutch adjustment. Depending on the degree of overhaul, some of these adjustments may not have to be changed; for instance, shaft end play should be

Affordable Wire Management, Exhibit No. EX1010
Case No. IPR2024-00182
Page 129 of 201

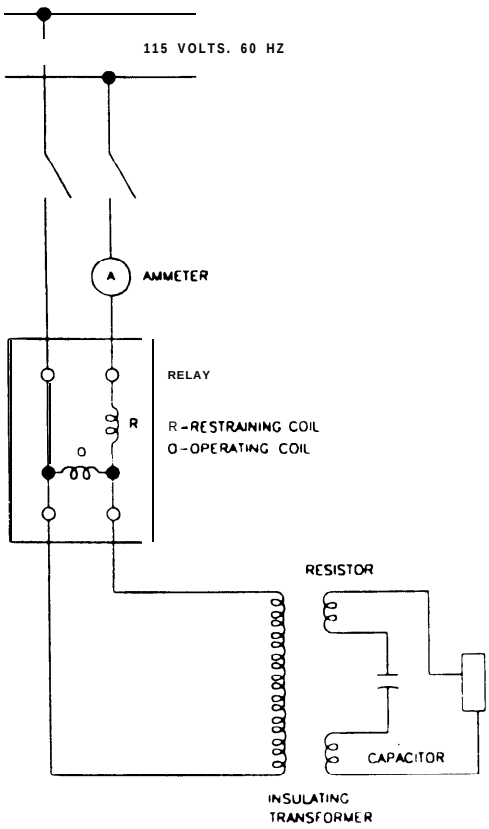

Figure 11-5. Typical test connection for a pilot wire relay

Table 11-l. Typical laboratory relay test equipment

Test equipment	Description
Variable voltage autotransformer	115 volt, 5 and 15-20 amperes
Multirange dc voltmeter.	3-15-150 volt, 5000 ohms
Multirange ac ammeter	0-2-5-l0-20-50-100-200 amperes
Multirange dc voltmeter.	0-3-7.5-30-75-150-300 volts
Multirange dc ammeter	0-5-20-50-amperes
Phase angle meter	5-10-30 amperes, 15-30-50-120-240-480 volts, 60 hertz
Auxiliary current transformers	1-5-10-25-50-62.5-125-250-500/5 amperes
Cycle counter or timer.	0-10 seconds, 120 volts
Phase shifter	three-phase, 500 watts
Multirange noninductive load resistor	0-100 amperes range
Three-phase sequence indicator.....	110-550 volts, 25-60 hertz
Auxiliary relays, dc	125 volt

satisfactory, provided the shaft or bearings have not been disturbed. In any case, the manufacturer's directions should be followed.

e. Performance check. Upon completion of repair work, complete performance tests should be made on the relay, even though the work done may not appear to affect relay operation. It is possible that during repair, other adjustments or alignment of relay parts may have been changed or affected. After an overhaul, the tests made should not be less thorough than the relay's original acceptance tests.

Section II-CONTROLS

11-10. Control functions.

Controls are broadly defined as the methods and means of governing the performance of any electric apparatus, machine, or system, by sensing any need for a change and facilitating that change. In performing these duties, control circuits or systems may act to regulate, protect, indicate, open, close, or time an operation. Control devices execute control functions.

a. Control equipment. Some of the more common equipment controlled are switches, circuit breakers, contactors, lights, rheostats, timers, and valves. Control schemes use combinations of the following component parts to produce the desired operation: alarms, batteries, coils, fuses, relays, solenoids, timers, switches, and transformers. Other special electrical equipment may be used also.

(1) *Electromechanical controls.* Electromechanical controls are operated by magnets, thermal action, motors, or other mechanical or static actions.

(2) *Solid-state controls.* Solid-state controls perform similar functions to electromechanical controls, but their characteristics are affected to a much greater degree by ambient temperature changes and excessive electrical circuit parameters.

b. Power supply. Control equipment may be powered from storage batteries or from an ac source. Controls will only be as dependable as their operating input. The power supply must be as reliable as possible, so that control and protection of the equipment is not jeopardized. See chapter 14 for details of battery maintenance and repair.

c. Control lines. Pneumatic and electromagnetic controls are gradually being replaced by electronic loop controls, as systems are increasingly being incorporated into energy management control systems (EMCS) or supervisory control and data acquisition systems (SCADA). Sensors are used to provide units of information via conventional (hard) wiring to the field interface devices (FIDs). A sensor is installed as a component part of the electrical apparatus being controlled and must be maintained by electrical maintenance personnel. Control line components such as FIDs, data transmission links, the central processing unit (CPU) and its subcomponents are not electrical maintenance responsibili-

Affordable Wire Management, Exhibit No. EX1010
Case No. IPR2024-00182
Page 130 of 201

ties. Communication, not electric, lines are used, such as telephone pairs; coaxial cable; radio, microwave or power line carrier signals; and fiber optics, sometimes as a part of a local area network (LAN).

11-11. Preventive maintenance and inspections of controls.

A well planned schedule of maintenance and inspections will pay large dividends in fewer interruptions and longer equipment life. More frequent inspections may be necessary for apparatus that receives hard service or is located in dirty, dusty, or damp locations. Only specially trained personnel should attempt to service and maintain control equipment.

a. Wiring diagrams and tools. Complete wiring diagrams are necessary to adequately service controls. Simplified schematic diagrams, showing all current and potential coils and contacts, are also very desirable for maintenance work. These diagrams expedite locating and correcting trouble. Keep wiring diagrams up-to-date and indicate any changes that have been made in the system subsequent to its installation. Proper tools and test equipment must be available for servicing special equipment. An adequately equipped laboratory or shop, with portable test apparatus, is necessary for major repairs.

b. Connections. Periodically, and after any wiring changes, connections and circuits should be completely checked for proper operation. Maintaining an installation free and clear of dirt, dust, grease, and other contaminants will help ensure proper operation. Loose connections may occur at times, and should be corrected as soon as possible to avoid serious damage to other equipment.

c. Contacts. Control equipment power contact surfaces are usually of silver, copper, weld-resistant alloys, or other electrically sensitive materials. Silver tips should never be filed or cleaned with abrasive materials. Crocus cloth is best for cleaning silver contacts. Copper and weld-resistant tips may be filed; however, care must be taken to ensure that only enough oxide is removed to attain good contact. The so-called electrically sensitive materials, including gold, platinum, and rhodium, are used for special applications where good electrical connection with low contact pressure is desired. The manufacturer's instructions should be followed for treating these contacts. Inspections and perhaps cleaning as often as monthly may be required for contacts which switch heavy currents frequently.

d. Magnet-operated devices. Magnet operated components such as relays, coils, solenoids, and brakes should be inspected periodically for dirt, heating, freedom of moving parts, corrosion, wear, noise, and general overall condition. Tests on some of these items may be necessary at times, particularly after a faulty operation. These tests will have to be conducted when the machine or equipment being controlled can be removed from service. Monthly inspection should be adequate. Annual testing of the insulation will detect defective wiring before the insulation breaks down.

e. Thermally-operated devices. Thermostats, thermal overload units, and temperature devices operate on the heating effect of electric current. Inspect units about once a month for dirt, excess heating, freedom of moving parts, corrosion, wear, and condition of the heating elements. As elements which normally operate only when an overload or trouble takes place in the equipment being controlled, they must be in good operating condition at all times.

f. Motor-operated devices. Motor-operated timers, thrusters, valves, and brakes are included in this category. Periodic inspections should be made for evidence of dirt, heating, corrosion, wear, noisy operation, and vibration. Such inspections should ensure correct voltage, freedom of moving parts, proper lubrication, adequate gaskets, and satisfactory condition of gearing. Cleanliness is particularly important in mechanical linkages. Trial operation of moving parts may be necessary to detect trouble. As this may necessitate temporary removal from service, actual operation tests if necessary should be coordinated with scheduled equipment outages. Monthly inspections should be satisfactory, but for extremely dirty locations more frequent inspections are desirable.

g. Mechanically-operated devices. Mechanically-operated devices include master, selector, knife, limit, speed, flow, float, and pressure switches; drum controllers; push buttons; and manual starters. Inspections of these parts for dirt, heating, corrosion, restriction of moving parts, contact and alignment wear, general condition, sealing, sludge, and lubrication are required. Each individual case must be studied on its own merits to determine if the seriousness of the condition justifies an interruption of operation for maintenance. In some cases, temporarily disconnecting the control circuit long enough for repairs may be possible. Inspections every 6 months should be satisfactory, but more frequent inspections may be necessary where contamination is severe.

h. Static accessories. Static accessories include resistors, rectifiers, capacitors, arc chutes, shunts, interlocks, transformers, fuses, wiring, and bus cables. Inspect for dirt, heating, corrosion, proper clearances, and loose connections. The urgency of any required corrective measures should be established in accordance with the seriousness of the condition. In general, inspections should be made

Affordable Wire Management, Exhibit No. EX1010
Case No. IPR2024-00182
Page 131 of 201

every 6 months; however, more frequent inspections may be desirable where unusual conditions prevail.

i. Solid-state devices. Because of the nature of the parts used (resistors, reactors, capacitors, transformers, transistors, and integrated circuits), little maintenance is required. Inspection and testing are done at comparatively long time intervals. Transistors and integrated circuits are usually replaceable items and need little servicing. Many control parts are similar to those used in magnetic controls, such as cases, bases, terminals, wiring, and conduit devices. Standard magnetic control items, such as fuses, switches, contactors, overload devices, and some relays, may be used in conjunction with solid-state devices. The infrequent operation of controls used in starting and stopping operations may lead to special maintenance problems. Inspections every 6 months should be satisfactory, unless this period exceeds manufacturers' recommendations.

(1) *Characteristics.* Ambient temperatures, vibration, electrical noise, surge currents, and transient overvoltages, in excess of those specified by the manufacturer, can cause unacceptable affects. Always check that system characteristics do not exceed the requirements stated in the manufacturers' instructions.

(2) *Precautions.* Polarized devices connected incorrectly may malfunction and damage the equipment controlled. Though a solid-state device may have no applied control signal, there can be a small amount of current flow. Precautions are necessary to ensure proper circuit protection and personnel safety. Before working on the circuit or load, such devices should be disconnected from the power source to prevent energizing of an input device.

(3) *Testing.* Follow the manufacturer's procedures and recommendations. Do not use a low impedance voltage tester. Do not make high-voltage insulation tests or dielectric tests unless solid-state devices have been disconnected. Ohmmeters should only be used when and as recommended by the manufacturer. If testing equipment can not be grounded, special precautions should be taken. Also refer to NEMA ICS 1.1.

j. Test equipment. Commonly used test equipment includes multirange ac and dc ammeters and voltmeters, timers, ohmmeters, and auxiliary relays. Test leads, resistors, and tool kits are also required for servicing controls. A suitable shop should be available when major repairs are to be made. If solid-state equipment is to be checked, an oscilloscope or oscillograph and a high resistance voltmeter will be required.

k. Repair parts. Spare parts should be kept on hand, particularly if the equipment cannot be taken out of service for long periods of time. Parts should be stocked if they receive considerable wear or experience frequent replacement. A list of spare parts from the appropriate manufacturer can be used as a general guide for stocking. When broken or damaged parts are returned to the manufacturer, they should be accompanied with complete information regarding model number, nameplate data, duty cycle, service conditions, description of the failure, and probable reasons for the failure.

11-12. Troubleshooting controls.

In order to expedite repair work, it is important that the technician be thoroughly familiar with the equipment and the control operation. An elementary wiring diagram is most useful in maintenance or inspection work and should be available near the equipment. Portable testing instruments for checking continuity, resistance and adequacy of insulation, voltage, and current should also be available.

a. Solid-state devices. The list of possible troubles which can occur in solid-state control equipment is too length to be of value here. Instruction books prepared and furnished by equipment manufacturers usually contain troubleshooting guides, which should be used.

b. Electromagnetic devices. Table 11-2 lists some of the more common troubles (with their causes and remedies) encountered in general control equipment.

Table 11–2. Troubleshooting chart for general control equipment

Trouble	Cause	Course of action
CONTACTS:		
Contact chatter.	1. Low voltage or current	Check voltage and current.
	2. Poor contact in control pickup circuit	Improve the contact or use holding interlock.
	3. Excessive chattering after jogging.	Find out whether device is recommended for jogging service. If not, caution operator.
	4. Broken pole shader or parts.	Replace defective part.
	5. Contactor slams, thus opening interlock in coil circuit.	Increase wipe and pressure on interlock.

Affordable Wire Management, Exhibit No. EX1010
Case No. IPR2024-00182
Page 132 of 201

Table 11-2. Troubleshooting chart for general control equipment (continued)

Trouble	Cause	Course of action
Overheating of contact tips	1. Copper oxide on contact tips or tips in poor condition	Install silver-faced tips. If copper tips, file with a fine file or replace tips. **CAUTION:** Excess filing wears out the tips. Never file silver-faced tips.
	2. Carrying load continuously for a long time.	Install silver-faced tips or clean tips. Check application.
	3. High inductive loads	Install silver-faced tips.
	4. Sustained overload	Reduce current or install a larger device.
	5. Low tip pressure	Clean, adjust, check springs.
	6. Loose connection	Clean and tighten. Check voltage drop across tips.
Short circuit currents on contacts	1. Feeder fuses too large	Eliminate short circuits or use smaller fuses in feeder.
Short tip life	1. Interrupting high currents. Tip life varies approximately inversely as the square of the current interrupted	Install special tips designed to withstand arcing better than copper. (There are cases where these cannot be used because of their high resistance and lower rating.) For jogging service, install larger device designed for jogging service.
	2. Excessive filing or dressing	Do not file silver tips. The rough spots will not hurt them.
	3. Oil immersed device is a misapplication. **(NOTE:** Oil immersed tips burn away from 20 to 40 times as fast as similar tips breaking the same current in air.)	Change to air break device if oil is not essential.
	4. Mechanical rebound on dropout, causing tips to touch	Reduce rebound, or report trouble to manufacturer.
Weak tip pressure	1. Defective part	Replace part.
	2. Wear allowance gone	Replace and adjust.
	3. Poor tip adjustment	Adjust gap and wipe.
	4. Low voltage that prevents magnet sealing	Correct voltage condition (possible line regulation).
Welding or freezing	1. Abnormal inrush of currents of more or less than 10 times continuous rating. This will vary, depending on the type of device	Reduce currents. Substitute special nonweld tips. Install larger device. Install copper tips. **CAUTION:** The possibility of overheating copper tips should be considered.
	2. Rapid jogging	Install copper tips if otherwise suitable
COILS:		
Coil failure	1. Loose connection	Tighten connections.
	2. Moisture, corrosive atmosphere	Relocate coils or use special resistant coils. Dry out coils.
Open circuit not roasted	1. Mechanical damage	Do not handle coils by the leads.
	2. Excess vibration or shock; coil movement causing insulation failure or broken wire.	Check manufacturer.
Overheated, roasted	1. Overvoltage or high ambient	Check application and circuit.
	2. Wrong coil, short time rated coil energized too long	Check manufacturer.
	3. Shorted turns, caused by mechanical damage, corrosion, or conducting dust	Replace coil and correct conditions if practical to do so.
	4. Too frequent operation (very rapid jogging of ac coils)	Check application.
	5. Under-voltage, failure of magnet to seal in.	Check circuit interlock.
Series coils overheated (Includes blowout coils)	1. Overloaded	Install larger coil, or reduce current.
	2. High ambient	Relocate, or reduce temperature.
	3. Loose connection, corrosion, oxidation on connection surfaces	If connection is hot, clean before tightening.
Flexible shunt failure	1. Improper installation	See manufacturer's instructions.
	2. Too many operations	Replace shunt.
	3. Worn out mechanically	Replace shunt.
	4. Corrosive atmosphere or moisture	Replace shunt and correct condition.
	5. Burned by arcing; oxidized connection	Check application and system voltage.

Affordable Wire Management, Exhibit No. EX1010
Case No. IPR2024-00182
Page 133 of 201

Table 11-2. Doubleshooting chart for general control equipment (continued)

Trouble	Cause	Course of action
MAGNETS AND OTHER MECHANICAL PARTS:		
Worn or broken parts	1. Contacts slam in caused by: overvoltage, underload, wrong coil. Chattering caused by: broken pole shader or poor contact in control circuit. Heavy duty cycle. Too much jogging. Abrasive dirt, mechanical abuse.	Replace part and correct cause of damage. **NOTE:** The mechanical life should be measured in number of operations.
Noisy magnet.	1. Broken pole shader, magnet faces not true (result of wear or mounting strains).	Replace. (For locations where the ac hum is objectionable, use dc magnets. Hum can be reduced by mounting on rubber or springs.)
	2. Dirt or rust on magnet faces..	Clean magnet.
	3. Low voltage.	Check system voltage.
Broken pole shader	1. Contacts slam in caused by: overvoltage, magnet underloaded, weak tip pressure, wrong coil.	Replace and correct the cause.
SLIDING CONTACTS:		
Abrasion roughening of contacts	1. Lack of care and lubrication; very heavy service; arcing; oxidation; abrasive dirt..	Sliding contacts usually require lubrication. (Use lubricant recommended by manufacturer.) Special alloy contacts should be specified for extra heavy service.
Arc	1. Abnormal interrupting duty such as inductive loads, excess vibration, or shock..	Check application. NOTE: On severe-duty applications, arc chutes wear out and must be replaced periodically.
	2. Moisture	Eliminate presence of moisture. Keep several chutes on hand for replacement.
	3. Improper assembly..	See manufacturer's instruction sheet.
	4. Rough handling.	Replace.
Drum switches, rheostats, knife switches overheating.	1. Overcurrent; low contact pressure; oxidation; high ambient; rough contacts..	For very heavy service, use special alloy contacts. Lubricate periodically as manufacturer recommends.
Insulation failure	1. Overvoltage, voltage transients, high induced voltages, moisture.	Correct system voltage and conditions. Use discharge resistors where needed.
	2. Mechanical damage..	Replace damaged parts. Correct condition.
	3. Moisture, dirt and fumes, overheating (carbonizing).	Keep controls clean and dry. Get special coil for application.
Failure to pick up.	1. Low voltage on coil.	Check system voltage.
	2. Coil open, wiring of coil or shortened turns	Replace.
	3. Wrong coil.	Check manufacturer for recommendations.
	4. Excessive magnet gap, magnet overloaded.	Check instruction sheet and adjust.
Failure to drop out magnet-operated device	1. Mechanical binding.	Check instruction sheet, and adjust.
	2. Gum or dirt on magnet faces.	Clean.
	3. Worn bearings..	Replace the part.
	4. Nonmagnetic gap in magnetic circuit destroyed	Replace magnet.
	5. Contact tip welded..	Use other contact material.
	6. Voltage not removed.	Check coil voltage.
	7. Not enough mechanical load on magnet, improper adjustment.	Check instruction sheet, and adjust.
OVERLOAD RELAYS:		
Magnet-operated instantaneous-type, high trip or low trip.	1. Wrong coil.	Install coil with correct rating.
	2. Shorted turns (on high trip).	Test coil and replace if found defective.
	3. Mechanical binding; dirt, corrosion, etc..	Clean parts with suitable solvent.
	4. Assembled wrong..	See manufacturer's instruction sheet.
	5. Wrong calibration.	Refer to manufacturer.
Magnet-operated inverse-time type, slow type.	1. Fluid too viscous, vent too small, or temperature too low.	Change fluid and open vent slightly, or regulate temperature.
	2. Mechanical binding; dirt corrosion, etc.	Clean parts with suitable solvent.
	3. Worn parts.	Replace and adjust.
Fast trip	1. Worn or broken parts.	Replace.

Affordable Wire Management, Exhibit No. EX1010
Case No. IPR2024-00182
Page 134 of 201

Table 11-2. Troubleshooting chart for general control equipment (continued)

Trouble	Cause	Course of action
	2. Same as above, except fluid dry or too light. Vent too large or temperature too high.	Use heavier fluid or close vent slightly or regulate temperature. Dashpots should be cleaned periodically and refilled with new oil.
Thermal type.	1. Wrong size of heater.	Check rating with manufacturer's instruction sheet.
Failure to trip causing motor burnout	1. Mechanical binding; dirt, corrosion, etc.	Clean and adjust relay.
	2. Relay damaged by short circuit.	Replace relay.
	3. Motor and relay in different ambient temperatures	Install motor and control near to each other, or make temperature uniform for both. Use ambient-compensated relay.
Trips at too low temperature.	1. Wrong heater.	Check rating with manufacturer's instruction sheet.
	2. Assembled wrong.	See instruction sheet.
	3. Relay in high ambient temperature.	Install controls closer to each other, or make temperature uniform. Use ambient-compensated relay.
	4. Wrong calibration.	Consult manufacturer.
Failure to reset.	1. Broken mechanism; worn parts; corrosion, dirt	Replace broken parts, clean, and adjust.
Burning or welding of control contacts and shunts.	1. Short circuits on control circuit with too large protecting fuses	In general, use fuses of not over 10 ampere rating.
	2. Severe vibration	Remount control.
	3. Dirt, corrosion	Clean and adjust.
	4. Misapplication, current too high.	Reduce current or get manufacturer's recommendations.
TIMING RELAYS:		
Mechanical escapement type, mechanical wear or broken parts	1. Abrasive dirt.	Clean and replace worn parts.
	2. Wrong application.	Get manufacturer's recommendations.
	3. Very heavy service cycle	Get manufacturer's recommendations.
Jamming or sticking	1. Dirt; corrosion; moisture; lack of lubrication; worn or broken parts.	Clean and lubricate moving parts; replace worn or broken parts. Correct condition.
Decay of flux type, too short time	1. Dirtinairgap.	Clean.
	2. Shim too thick.	Replace with thinner shim.
	3. Excess spring and tip pressure.	See instruction book.
	4. Misalignment.	Correct alignment and remedy with cause.
Decay of flux type, too long time	1. Shim worn	Replace with heavier shim.
	2. Weak spring and contact pressure. Gum or dirt on magnet faces, or mechanical binding.	See instruction book. Clean and adjust.
Magnet-operated capacitor type, too short time	1. Dirt or gum in air gaps.	Clean.
	2 High spring and contact pressure.	See instruction book.
Magnet-operated capacitor type, too long time	1 Mechanical binding or sticking.	Clean and adjust.
	2 Worn shim	Replace.
	3 Weak spring and tip pressure.	See instruction book.
	4 Too much capacitance or resistance.	Chck manufacturer.
Motor-operated type, failure to time out.	1. Worn or broken parts.	Replace parts and adjust them.
	2. Corrosion, dirt.	Clean.
	3. Motor damaged.	Check condition of motor electrically and mechanically.
	4. No voltage on motor.	Check circuit.
Failure to reset	1. Worn or broken parts; corrosion, dirt.	Replace parts and adjust.
BRAKES:		
Magnet-operated or thrustor-operated, worn or broken parts	1. See magnets and other mechanical parts.	
	2. Heavy duty cycle, high inertia loads, excess temperature, rough surface on wheels, misapplication.	Check application. A larger or different type brake may be needed.
Failure to hold load	1. Worn parts, out of adjustment, wrong friction material used for replacement.	Replace worn parts.

Affordable Wire Management, Exhibit No. EX1010
Case No. IPR2024-00182
Page 135 of 201

Table 11-2. Troubleshooting chart for general control equipment (continued)

Trouble	Cause	Course of action
	2. Grease or oil on brake wheel.	Remove grease or oil.
Failure to set.	1. Out of adjustment; worn parts, mechanical binding.	Replace worn parts and adjust them.
	2. Coil not de-energized.	Examine brake and check circuit to make sure current is cut off.
Failure to release	1. Out of adjustment.	See manufacturer's instructions.
	2. Coil not energized; low voltage or current.	Check connections.
	3. Wrong coil.	Check with manufacturer as to correct coil.
	4. Shorted turns or coil open.	See manufacturer's instructions.
	5. Coil not energized; low voltage or current.	Check to see if coil is getting correct voltage or current.
	6. Open coil or shorted turns.	Replace coil.
VALVES:		
Electrically-operated, solenoid, thrustor, or motor-operated, leaks and mechanical failure	1. Worn valve seal.	Replace seal or valve.
	2. Abrasive matter in fluid.	Check application; use strainer ahead of each valve.
	3. Corrosion	Remove corrosive elements from fluid, or get manufacturer's recommendations.
Noise	1. Same as for noisy magnet.	See noisy magnet.
	2. Water hammer.	Install surge tank.
THRUSTORS:		
Failure to more load	1. Worn parts.	Replace worn parts.
	2. No voltage on motor.	Check circuit and connections.
	3. Misapplication.	Get manufacturer's recommendations.
THERMOSTATS:		
Bulb and bellows type, with expanding fluid, bellows distorted	1. Mechanical binding.	Clean and adjust.
	2. Temperature too far above normal.	Replace bellows.
Bulb distorted	1. Liquid frozen in capillary tube, or tube stopped up.	Replace bulb and bellows assembly.
RESISTORS:		
Insulation failure	1. See insulation failure.	See insulation failure.
Overheating.	1. Rating too low.	Install larger resistor.
	2. Running on starting resistor.	Check the timer to make sure it operates.
	3. Restricted ventilation.	Relocate.
Open circuit.	1. Burned out from overheating.	Replace resistor and see above.
	2. Corrosion, moisture, acid fumes,	Relocate or correct atmospheric conditions.
	3. Mechanical damage.	Replace worn or broken parts.
RECTIFIERS-DIODES:		
Dry type, overheating	1. Overvoltage	Correct system voltage.
	2. Overcurrent, intermittent-rated unit left on continously	Check operation of circuit and application.
	3. High ambient.	Relocate unit or correct condition.
	4. Misapplication.	Get manufacturer's recommendation.
Failure burnout or breakdown	1. Overheating, corrosive atmosphere, overvoltage, mechanical damage	Same as for overheating.
CAPACITORS:		
Breakdown or failure of dielectric	1. Overvoltage.	Check system voltage.
	2. Voltage surges caused by switching or lightning.	Install protective equipment.
	3. Some types not usable on ac.	Check applications.
	4. Moisture, corrosion, or high temperature.	Correct condition, or install special unit.
	5. Continuous voltage on intermittent-rated unit.	Install proper unit.
	6. Mechanical damage.	Replace capacitor.
	7. Wrong polarity on dc unit.	Replace capacitor and reconnect, changing polarity.
FUSES:		
Premature blowing.	1. Fuse too small.	Check application.

Affordable Wire Management, Exhibit No. EX1010
Case No. IPR2024-00182
Page 136 of 201

Table 11-2. Troubleshooting chart for general control equipment (continued)

Trouble	Cause	Course of action
	2. Heating at ferrle contacts, corrosion or oxidation of ferrules and clips..	Keep ferrules and clips clean. Use plated clips and ferrules; replace annealed clips.
	3. Weak contact pressure.	Provide adequate pressure.
Too slow blowing.	1. Wrong size of fuse for application.	Check application.
TRANSFORMERS:		
Overheating.	1. Overcurrent or overvoltage.	Check load on transformer and system voltage.
	2. Intermittent-rated unti left on continuously.	Failure of other devices to operate properly.
	3. High ambient.	Relocate transformer or reduce load.
	4. Shorted turns.	Replace coil.
Insulation failure	1. See insulation failure.	See insulation failure.
MASTER, SELECTOR, LIMIT, SPEED, FLOAT, FLOW, PRESSURE, KNIFE, AND DRUM SWITCHES; PUSH BUTTONS. MANUAL CONTACORS, RHEOSTATS:	These causes are similar to those listed under contacts, mechanical parts, and insulation.	See contacts, mechanical parts, and insulation failure.
MANUAL STARTERS:	These causes are similar to those listed under contacts, sliding contacts, mechanical parts, insulation failure, and thermal overload relays.	See contacts, sliding contacts, mechanical parts, insulation failure, and thermal overload relays.
MOTOR STARTER CIRCUIT BREAKERS:		
Premature tripping	1. Setting too low.	Reset or increase trip setting.
	2. Repetitive closing and jogging.	Check load and current peaks against setting.
	3. Undervoltage device and control circuit and auxiliary pilot devices affected by operating circuit.	Check circuits.
	4. Incorrectrating.	Replace circuit breaker.
Failure to latch in or open and reset	1 Incorrect adjustment.	See circuit breakers instructions. Check and adjust parts.
	2. Worn parts.	Replace parts.
	3. Excessive currents causing contact wear.	Replace circuit breaker.
	4. Fault in remote control circuit.	Check circuits.
	5. Door mechanism out of adjustment.	Readjust.
	6. Trip element or mechanism damaged.	Replace parts.
	7. Corrosion or dirt.	Clean.
	8. Arc chutes damaged.	Replace parts.
Short contact life	1. Corrosion.	Check starting current, reduce duty cycle.
	2. High currents and frequent operation causing burning.	Check starting current, reduce duty cycle.
	3. Misapplication.	Refer to manufacturer.
	4. Excessive filing and dressing.	Do not file contacts.
Welding of contacts.	1. High inrush currents during motor starting.	Reduce currents.
	2. Rapid jogging.	Use suitable contactor.
	3. Incomplete manual closure.	Frequent inspection.
	4. Inadequate maintenance for renewal of contacts.	Renew contacts.

Affordable Wire Management, Exhibit No. EX1010
Case No. IPR2024-00182
Page 137 of 201

CHAPTER 12

INSTRUMENTS AND METERS

Section I-CONSIDERATIONS

12-1. Electrical instruments.

Industry standards define electrical instruments as devices used to measure the present value of electrical quantities under observation. An instrument may be an indicating instrument or a recording instrument. By this definition ammeters, voltmeters, and frequency meters are instruments, not meters.

12-2. Electrical meters.

Industry standards define electrical meters as devices used to measure and register the cumulative value of electrical quantities with respect to time. For example, a watthour meter is used to measure and register the amount of average electrical power over a period of time.

12-3. Validity of electrical measurements.

The basis for measurements should be understood.

a. Measurement techniques. Many units measuring ac values will do so using average, peak, or effective values, based on the assumption that the system provides a pure sine wave. With the growing use of solid-state equipment, the waveforms being measured are increasingly less like a pure sine wave. Resulting measurements can be misleading, but such results are not necessarily the fault of the measuring device.

b. Equivalent rms value. Sine-wave measurements have been traditionally based on the effective value or root-mean-square (rms) value. This ac voltage or current (also known as the effective value) is the value of direct current or voltage that will produce the same heating effect. A peak ac value of 1.414 per unit will produce the same heating effect as a 1.0 per unit dc value, if the ac waveform is a pure sine wave. Therefore, instruments and meters may measures the highest instantaneous, (peak) value or the half-cycle average value. These values are converted by calibration into an rms value. None of these techniques work for accurate measurements of distorted voltage and current waveforms resulting from the action of increasing power electronic loads. Since the distorted waveforms can be represented, mathematically as the imposition of harmonic frequencies (integral multiples of the fundamental 60-hertz frequency) these waveforms are considered harmonically distorted in relation to the number of harmonics involved. Power quality is influenced by generated harmonics to the extent that the total harmonic disturbance affects utilization equipment. There is more at chapter 16, section III.

c. True rms values. A variety of true rms sensing devices are in use for voltage and current measurements. They are also recommended for power quality measurements. Such units will be increasingly installed in switchgear as recent trends in power measurements have been toward digital true rms display devices in the interest of accuracy, ease of readout, and accumulation of data.

12-4. Fixed installations of instruments and meters.

Fixed installations of instruments include ammeters, voltmeters, frequency meters, varmeters, power factor meters, wattmeters, and watthour meters. In general, these may be single-phase or three-phase devices, suitable for mounting on switchboard panels, consoles, or switchgear cubicles. They are available as either indicating, recording, or integrating meters and instruments. Older installations will probably be the electromechanical type. New installations will increasingly be provided with solid-state digital units with self-diagnostic capabilities.

12-5. Portable instruments and meters.

Portable instruments and meters are used for calibration of fixed instruments and meters, trouble shooting, and maintenance work. They should be compared periodically with laboratory standards for accuracy. True rms sensing units should be used. If not available, they should be requisitioned.

12-6. Inspections of instruments and meters.

Instruments and meters should be visually inspected periodically to determine that they are clean and that their contact surfaces are free of corrosion; that nuts and binding posts are firmly tightened; and that wire, cable, and leads are adequate, neatly arranged, and properly insulated.

12-7. Tests of instruments and meters.

The schedules for the calibration and tests of instruments and meters are dependent, to a great extent, upon the particular installation. When precision is not essential, the period between tests is not critical and may be assigned as convenient. Switchboard

Affordable Wire Management, Exhibit No. EX1010
Case No. IPR2024-00182
Page 138 of 201

graphic instruments, revenue watthour meters, and similar equipment should receive calibration tests at a minimum of every 4 years. Units provided with built-in diagnostic capabilities should be checked when their associated power apparatus is checked.

Section II-PREVENTIVE MAINTENANCE

12-8. Mounting of instruments and meters.

Instruments and meters, designed for permanent installation, are available for either flush or projection mounting. Proper mounting can be a major factor in reducing the amount of maintenance that will be required. A minimum of vibration should be ensured in the mounting location and design. Vibration is a problem, especially with solid-state units. Shock-resistant mountings may be necessary, if the panel on which the instrument is mounted is subject to shock, as caused by the operation of heavy switchgear. Locations where strong magnetic fields exist (in proximity of heavy current-carrying conductors), should be avoided if accuracy is to be attained.

12-9. Installation of instruments and meters.

Check the installation if repeated problems occur. Extreme temperatures or excessive moisture may not have been taken into account when the installation was made. Units should always meet code-access requirements and be protected from mechanical damage.

12-10. Maintenance of instruments and meters.

Accuracy tests, repairs, calibrations, and adjustments of instruments and meters should be performed only by personnel trained and qualified for this type of work, or done under the immediate supervision of such personnel. Where activities do not have such specialists on board, arrangements should be made with a nearby activity equipped for this type of work; with local electric power companies on a maintenance contract basis; or through use of manufacturer's service shop facilities. It should be recognized that accuracy requirements for meters should be appropriate for the use to which readings and records are put, and that the cost of high accuracy must be economically justified.

Section III-CALIBRATION AND ADJUSTMENT

12-11. Accuracy check of instruments and meters.

The measurement of values in ac circuits is sometimes quite complex because of harmonic content, phase shifts of voltage versus current, or a combination of both of these factors. Additional loads on various phases may be unbalanced with respect to both loads and phase shifts. Take these conditions into account if true rms measuring devices are not used and the input source provides harmonics.

a. Instruments. The accuracy of observed readings depends partly on the construction of the instrument involved and partly on the skill of the observer. It is generally recommended that an instrument with a knife edge pointer be used in conjunction with a mirror to avoid parallax. The accuracy of the observed reading of any analog instrument varies with the deflection of the instrument; that is, the larger the deflection, the greater the accuracy. For example, consider an instrument with a scale reading of 100, divided into 100 divisions, which is accurate to plus or minus one division. A reading of 20 on this instrument has a margin or error of plus or minus one division, which means that the true value could be between 19 and 21, an actual variation of 10 percent. This emphasizes the necessity of selecting an instrument for a test such that the readings are on the high end of the scale.

b. Meters. The accuracy of an adjusted meter will remain practically unchanged for a long period, unless it is subjected to rough handling, heavy overloads for an extended period, or lightning surges. The best method of checking meter accuracy is obtained in the phantom load tests shown in figures 12-1 and 12-2. However, a quick determination of the accuracy of a watthour meter under steady load can be obtained by measuring the time required for a certain number of meter disk revolutions. For instance, if it takes "t" minutes for the meter disk to make "r" revolutions, the average power "W" is given in equation 12-1.

$$W = \frac{W = K \times r \times 60}{t} = \text{watts} \qquad \text{(eq. 12-l)}$$

"K" is the watthour constant and is stamped on the meter nameplate. The power flow determined by this method should be compared with the reading of a digital true rms watthour meter connected in parallel with the watthour meter being checked.

12-12. Adjustment of instruments and meters.

The instrument or meter to be adjusted should be disconnected from its normal circuit before any

Affordable Wire Management, Exhibit No. EX1010
Case No. IPR2024-00182
Page 139 of 201

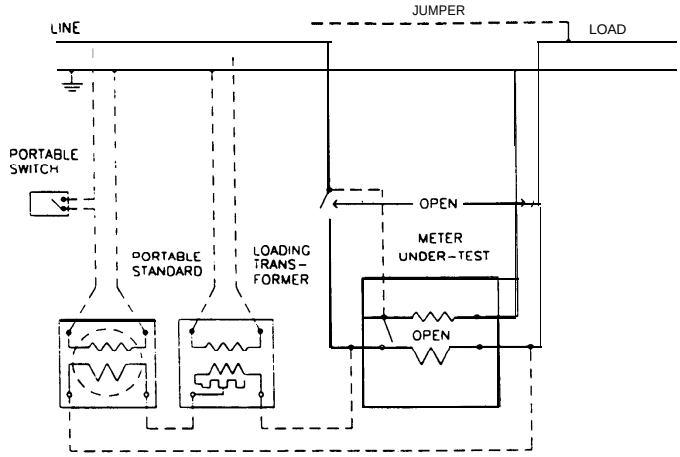

Figure 12-1. Method of connecting a phantom load for a field test, if on a single-phase, two-wire watthour meter

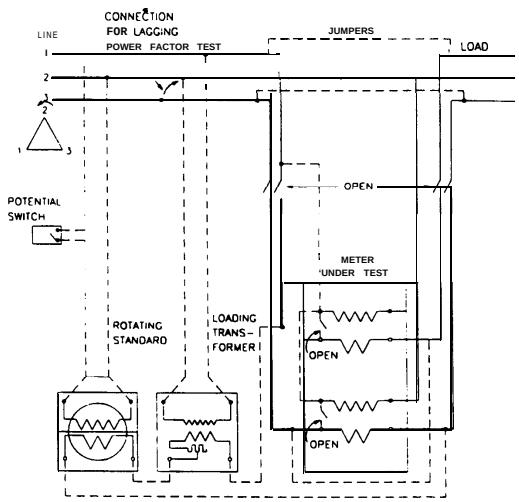

Figure 12-2. Method of connecting a phantom load for field test, if on a three-phase, three-wire watthour meter

work is done on it. Careful planning of the work will reduce the chances of an accident from energized equipment.

a. Preparation. Before making adjustments on instruments or meters that require removal of the cover, it is important that the outside of the instrument be thoroughly cleaned to prevent the entrance of any dirt, dust, or magnetic material. Also, the working space around the instrument or meter should be cleared to permit setting up test devices required for calibration and adjustment. Test devices should not be placed directly under the equipment to be adjusted.

b. Procedure for instruments. Adjustment procedures will vary according to the type of instrument. The manufacturer's instrument book should be consulted before making any adjustment. Adjustments for solid-state units may be different from the following general data applying to electromechanical units. Some adjustments of fixed instruments can be made without removal from their panel assembly mounting. Other adjustments, however, require that the instrument be taken to a shop or laboratory. All instruments should be adjusted for null (zero) reading. In most cases, this reading can be obtained with the instrument disconnected. For watt and varmeters, the null reading should be checked with only the current coil energized from a test source. The full scale adjustment should be obtained by slowly increasing the load to be measured to the full scale value. For example, a voltmeter is adjusted by varying the series resistance connected to the test power supply. Watch the pointer as the instrument is slowly loaded to its full scale value to check whether there is any friction in the movement. When a watt or varmeter is being adjusted, an ammeter should be used in series with the current coil of the meter and the current should be limited to the rating of the coil to prevent overheating. After the instrument has been calibrated and adjusted for full scale reading, the load should be gradually decreased and the null position checked again.

c. Procedures for meters. Meter adjustments are made for full load, light load, lag, and creep. Most polyphase meters have an additional adjustment to obtain balance between elements. The meter manufacturers' instruction book should be consulted for instructions before making any adjustments. General instructions given here may differ from manufacturers' instructions for solid-state meters. The lag and balance adjustments are usually made in a shop before installation. The adjustment of a meter is done by loading it with a phantom (artificial) load and comparing its performance with that of a cali-

brated portable standard meter. The test connections are shown in figures 12-1 and 12-2.

(1) *Full load adjustment.* The full load adjustment in most meters is accomplished by changing damping magnet positions. This involves changing the position of the magnetic shunt to vary the amount of flux passing through the disk. The change produced in the registration, expressed in percentage is practically the same on all loads. Thus, if the registration is 98 percent at both full load and light load, shifting the full load adjustment to increase the speed 2 percent will make the meter correct at both loads. The duration of the test at full load should be 10 revolutions of the meter disk.

(2) *Light load adjustment.* The light load adjustment is made by varying the amount of friction compensating torque. The effect of this is inversely proportional to the load, so twice as much torque is required at 5 percent load as at 10 percent load, or one-tenth as much at full load as at 10 percent load. Generally, when a meter is inaccurate at light load, more than compensation is required to correct the problem. In such cases, the tester should locate and correct the problem, and again check the accuracy before attempting adjustment. The light load test should be made at 10 percent of full load for a duration equivalent to two revolutions of the meter disk.

(3) *Lag or phase adjustment.* The lag or phase adjustment is ordinarily made in the shop as part of the routine test of all ac meters. Facilities for this test are readily available in the shop, and once the adjustment is made, it will not change significantly in service. The test to determine the lag or phase adjustment is generally made at 50 percent power factor, with rated current and voltage applied. Fifty percent power factor is generally used, because it can be readily obtained from a polyphase circuit without auxiliary equipment.

(4) *Creep adjustment.* Creep is the continuing rotation of a meter disk at no load for at least one complete revolution. Creep may occur either as backward or forward motion. Although only a rapid rate of creeping will result in appreciable registration of watthours, no meter should be allowed to creep 'continuously. When load is removed, a meter will generally rotate for a part of a revolution before coming to rest. This is not creep. Leakage or grounding in the load circuit may also cause a turning of the rotation element, which may be mistaken for creeping. Most induction meters are designed with holes or slots cut in opposite sides of the disk to prevent creeping. To locate the problem causing creeping, check the meter for evidence of:

(a) Incorrect compensation for friction.

(b) Vibration.

(c) Stray fields (internal or external).

(d) High voltage, that acts to overcompensate.

(e) Incorrect connection of the potential circuit. For example, the potential circuit is connected on the load side of the meter, when the adjustment has been made for connection to the service side of the meter.

(f) Short circuits in the current coils.

(g) Mechanical damage or disarrangement of the electromagnetic circuit.

Section IV-REPAIRS

12-13. Field repairs of instruments and meters.

Minor replacement of parts, such as dial faces, pointers, bearings and pivots, chart paper, and meter registers, may be made in the field. If extensive repairs are required, they should be made in a shop. When meter bearings or registers are replaced, recalibration of the meter is required.

12-14. Shop repairs of instruments and meters.

Reference should be made to the manufacturer's instruction books for methods of assembly and adjustment. After parts have been replaced, meters or instruments should be recalibrated. The methods to be followed are given in section III.

a. Overhauling. Major repair of a meter or instrument should be performed in a shop.

(1) *Instruments.* Repair of instruments should not be undertaken, except by qualified personnel equipped with proper tools. The manufacturer's instruction book should be consulted when making major repairs and when overhauling instruments. After the work is completed, the instrument should be adjusted and checked for accuracy.

(2) *Meters.* The following steps should be taken when a meter is brought to a shop for a complete overhaul:

(a) Take an initial reading, known as an "as found" reading as an accuracy check, and record the data.

(b) Clean the meter thoroughly, removing any dust or dirt with special attention to the magnet poles.

(c) Remove and examine the register to detect any defects that may prevent its correct registration. The worm or pinion on the shaft should be examined to see that it matches properly with the register wheel, which it drives. A slight amount of

Affordable Wire Management, Exhibit No. EX1010
Case No. IPR2024-00182
Page 141 of 201

play is necessary to prevent excessive friction. When the pinion or worm is short, or the worm is concave to match the curvature of the worm wheel, the height of the moving elements should be set so that the worm and pinion do not bind. For cleaning the pinion or worm, a small stiff brush or a sharpened piece of soft wood may be used.

(d) If the light load test indicated friction, clean all bearings and replace if necessary.

(e) Check the position of the disk in relation to the magnet poles. Center and align if necessary.

(f) Calibrate the meter, making all necessary adjustments described previously.

(g) Clean the cover and examine for defects. Replace gasket washers if necessary.

(h) When work is complete, take a reading, known as an "as left" reading, and record the data.

b. Lubrication. Use lubricants on electromechanical units with extreme caution.

(1) *Instruments.* The shafts of indicating instruments are usually supported by pivot bearings, which normally do not require lubricating.

(2) *Meters.* If the bearings of meters become defective, friction will be increased causing the meter to run slow. The function of the top bearing is to act as a centering guide. Excessive friction on this bearing may be caused by undue wear, corrosion, or rubbing. Clean and lubricate or replace parts as required. The lower bearing assembly ordinarily consists of a stationary sapphire jewel with a pivot on the rotating element, or two jewels with a steel ball between them. Excessive friction here may be caused by damaged or grooved jewels, worn or defective balls or pivots, or the presence of foreign material on the jewel. When replacing a sapphire bearing, pivots and balls should both be replaced since they have probably been damaged by rough bearings. When the jewel is still perfect, the pivot or ball may be worn. Do not use your hands to manipulate balls and pivots which can be damaged by such handling. Pivots can be inserted with a wrench provided for that purpose. Balls may be inserted into bearings by use of a ball dropping device. The lower bearing should be oiled by filling the bearing cup with an oil recommended by the manufacturer, but lower bearings of the ball type should never be oiled. Care should be taken no to mix oils of different characteristics. Several manufacturers make oil and special oilers for jewels and synchronous timers. Cleaning fluids are also available from several commercial sources to remove dirt and grit from bearings and balls.

Section V-TROUBLESHOOTING

12-15. Temperature influence on instruments and meters.

Almost all electromechanical instruments are influenced by temperature changes to some degree. Take this into account when recording instrument readings.

a. Direct-current instruments. The temperature error of dc voltmeters is principally due to changes in the tension of the springs. The change in electrical circuit resistance of a high grade voltmeter is usually negligible, since this circuit consists of resistance wire having an extremely low temperature coefficient. Direct-current ammeters usually have higher temperature coefficients than voltmeters, because their electrical circuits are composed chiefly of low-resistance copper.

b. Alternating-current instruments. The movable iron voltmeter designed for use at commercial voltages has a very small temperature coefficient, which normally does not need to be taken into account. An increase of temperature lowers both the permeability of the iron and the torque, and at the same time reduces both the strength of the spring and the counter torque by nearly the same amount. Hence, these ammeters are virtually independent of ordinary temperature changes. Electrodynamometer type instruments have controlling springs that are the only important element with respect to the temperature coefficient. Such instruments will read slightly lower at temperatures below that at which they are calibrated. The temperature effect on modern ac portable standard watthour meters is negligible throughout the normal temperature range.

12-16. Stray-field influence on instruments and meters.

Stray fields produced by other instruments, by conductors carrying heavy currents, and by generators and motors may cause an appreciable error in instrument readings. Even nonmagnetized masses of iron may influence the flux in an instrument. When it is necessary to make tests in places subject to strong stray fields, the instrument should be read, then turned 180 degrees, read again, and an average taken. Some instrument of the electrodynamometer type are made astatic (independent of position), in order to avoid the errors caused by stray fields. Two movable coils are connected so that

Affordable Wire Management, Exhibit No. EX1010
Case No. IPR2024-00182
Page 142 of 201

any torques produced by a stray field are equal and opposite.

12-17. Calibration of instruments and fields.

The frequency of calibrating instruments and meters depends on the use and accuracy desired. If calibration standards and equipment are not available, instruments and meters of nearly the same rating can be checked against one another. When wide discrepancies are noted, the instrument or meter that is obviously incorrect should be recalibrated and any needed repairs made.

12-18. Other instrument and meter considerations.

Most troubles have simple causes and may be easily corrected.

a. Indicating instruments. Table 12-1 indicates causes and remedial actions for common troubles that might occur with respect to indicating instruments.

b. Recording instruments and meters. Table *12-2* indicates causes and remedial actions for common troubles that might occur with respect to recording meters and instruments.

Table 12-1. Troubleshooting chart for indicating instruments

Trouble	Cause	Remedial action
No indication,	Instrument disconnected	Check external connections.
	Internal open circuit	Check for circuit continuity.
	Moving element jammed	Check alignment of movement.
	Internal short circuit.	Check internal connections.
Sluggishness or incorrect indication	Tight bearings.	Clean or replace bearings. Adjust bearing bushing.
	Dirty	General cleaning.
	Rubbing.	Check alignment and movement. Look for bent pointer.
	Corrosion.	Replace bearings if corrosion shows. Clean and give acid bath to part involved or replace.
	Increased friction	Pointer riding on scale due to warped scale. Spring touching. Magnetic dust in air gap.

Table 12-2. Troubleshooting chart for recording instruments and meters

Trouble	Cause	Remedia action
Chart stopped	No driving power	Check power source.
	Broken drive train.	Repair or replace drive train.
	Chart jammed	Check paper alignment.
Noinkrecord	Ink well empty	Fill well and clean pen.
	Broken ink tube	Replace tube.
	Broken pen	Replace pen.
	No pen contact.	Adjust pen holder.
	Plugged pen	Clean pen.
No registration	Open gear train.	Check gear and pinion alignment.
	Broken gears	Replace gears.
	Jammed registor.	Replace registor.
	Meter disconnected	Check external electrical connection.
	Internal open circuit	Check for circuit continuity.
Inaccurate readings.	Needs adjustment.	Check with standard and adjust.

Affordable Wire Management, Exhibit No. EX1010
Case No. IPR2024-00182
Page 143 of 201

CHAPTER 13

POWER CAPACITORS

Section I-CONSIDERATIONS

13-1. Description of power capacitors.

Power capacitors for use on electrical distribution systems provide a static source of leading reactive current. Power capacitors normally consist of aluminum foil, paper, or film-insulated cells immersed in a biodegradable insulating fluid and sealed in a metallic container. Depending on size and rating, they are available as either single- or three-phase units. Power capacitors are rated for a fundamental frequency, voltage, and kilovar (kilovoltamperes-reactive) capacity and are generally available in voltage ratings up to 34,500 volts and 200 kilovar. Individual units may be connected in series and multiples to provide banks of various capacities and voltage ratings.

13-2. Types of power capacitors.

The terms "series capacitor" and "shunt capacitor" are used to identify the type of connection and do not indicate a difference in the power capacitor construction.

a. Series power capacitors. Series power capacitors are primarily used for voltage regulation and receive very limited application in electrical distribution systems. In the usual application for power service, the series-capacitor kilovar rating is too low to improve the power factor significantly.

b. Shunt power capacitors. The shunt power capacitor is a capacitive reactance in shunt with the electrical load or system and is fundamentally provided for power-factor improvement. The benefits of improved voltage level, released system capacity, reduced system losses, and the reduction in the power bill all stem from the improvement in power factor.

13-3. Application of power capacitors.

Shunt capacitors are used on distribution circuits to reduce the kilovoltampere load on a low power factor circuit. Fixed shunt capacitors are used to improve the voltage level and switched shunt capacitors are used to improve voltage regulation. Capacitor installations will generally be connected grounded wye because of undesirable effects of other connections. All capacitor banks should be equipped with a means to disconnect them from the electric system. Some systems utilize ungrounded connections to minimize interference and because this connection is considered easy to fuse.

13-4. Permissible power capacitor dielectrics.

Capacitors containing polychlorinated biphenyl (PCB) should have been disposed of under the procedures of the Environmental Protection Agency to implement the Toxic Substances Control Act of 1976. If not disposed of, they should have been marked as containing PCB's. ANSI/IEEE 18 now requires an impregnant identification visible from the ground with a glue color used to designate a nonPCB liquid.

Section II-MAINTENANCE AND INSPECTION

13-5. Ensuring safe capacitor deenergizing.

Capacitors retain a charge after they are deenergized. After capacitors are deenergized allow at least 5 minutes for discharge and then short the capacitor terminals to ground and to each other. These grounding provisions should remain until work on the installation is completed. Although most power capacitors have a discharge resistor installed to automatically discharge them after they are disconnected from the circuit, it is not advisable to depend entirely on such resistors for safety.

13-6. Power capacitor inspection schedule.

The initial inspection should be made within 24 hours after energizing a new capacitor installation. This inspection should be made at a time of maximum circuit voltage, usually during the first period of light load on the circuit. In addition to visual observations, this inspection should include voltage and current readings to ensure that voltages and currents do not exceed capacitor rating limits. Operating kilovars (the sum of the fundamental frequency kilovars and any harmonic frequency kilovars) should not exceed 135 percent of the capacitor rating. Routine maintenance and inspection should be accomplished at least four times per year.

13-7. Ventilation of power capacitors.

Power capacitors are very efficient but do generate some heat which must be adequately ventilated. Make sure that airflow around the individual capacitor units is not obstructed. Be especially careful in checking vertical capacitor banks, where heated air around the lower units rises to the top rows.

Affordable Wire Management, Exhibit No. EX1010
Case No. IPR2024-00182
Page 144 of 201

Improperly ventilated housings on such installations may result in excessive operating temperatures.

13-8. Temperature influence on power capacitors.

Modern power capacitors are designed for operation at a maximum ambient temperature as given in table 13-1 (which occurs at rated voltage and frequency and while subjected to the direct rays of the sun). Conditions resulting higher operating temperatures may injure the insulation and should be avoided. Capacitors are designed for continuous operation at a maximum ambient temperature of 40 degrees C. Capacitors that are normally deenergized, or operate intermittently at or below an ambient temperature of minus 20 degrees C, should be carefully inspected. At extremely low temperatures liquid insulation can crystallize which decreases insulation strength and failure may occur when the capacitor is re-energized. For installations where low temperature is a problem, units should be kept energized.

13-9. Exposure influence on power capacitors.

Care should be taken to eliminate or minimize exposure of capacitors to damaging fumes or vapors, salt air, unusual dampness, contamination, abnormal shock, or vibration. Corroded or rusted capacitor cases and mountings should be cleaned and painted. Capacitor bushings and busbar supports, subject to accumulation of dust or foreign materials, should be cleaned periodically. The intervals will depend on the severity of the condition.

13-10. Voltage influence on power capacitors.

Shunt capacitors cause a voltage rise at the point where they are located and are likely to operate at overvoltages. Capacitors are designed to operate continuously up to 110 percent of rated voltage rms; provided that the crest voltage, including all harmonics, does not exceed 1.2 times the square root of 2 times the rated rms voltage; and provided that the 135 percent maximum permissible rated kilovars has not been exceeded. Since operation in excess of voltage and temperature limits may shorten the life of a capacitor, the voltage should be checked periodically to ensure that it is within design limitations.

13-11. Fuses for power capacitors.

A capacitor fuse is not used for overload protection in the same manner as a fuse is used for overload protection of other electric apparatus. The current rating has to allow for inrush current, and capacitor fuse ratings typically range from 165 to 250 percent of the capacitor current rating. Fuse ratings should always be those recommended by the manufacturer, since the fuse's time-current characteristic must be matched to the capacitor's tank-rupture time-current characteristic. The blowing of a properly-rated fuse may indicate a capacitor fault, as well as a circuit overcurrent operating condition. When inspection reveals blown fuses, do not replace such fuses until a check determines that the capacitor unit is still serviceable. When fuses are replaced, be sure they are of proper voltage and current ratings and in compliance with the capacitor manufacturer's recommendations.

Table 13-1. Maximum ambient temperatures for continuous operation[1,2]

Mounting arrangement	Ambient air temperature in degrees C: 24 hour average	Ambient air temperature in degrees C: Normal annual[4]
Isolated capacitor	46	35
Single row of capacitors	40	25
Multiple rows and tiers of capacitors	35	20
Metal enclosed or housed equipments	35	20

[1]Copyright © 1993 IEEE, all rights reserved.
[2]For switched or continuous operation in outdoor locations with unrestricted ventilation and direct sunlight.
[3]The 24-hour arithmetic average of hourly readings during the hottest day expected at that location.
[4]As defined in the reports of the US Weather Bureau.

Section III-TESTS

13-12. Field tests for power capacitors.

Field tests differ depending on whether a power capacitor is being put into service or whether it is being checked after it has been in service. Switched capacitor banks must be checked for correct switching operation.

a. Before service tests. Experience has shown that these tests may not be necessary on all capacitors. Tests consist of lo-second voltage applications not in excess of 75 percent of factory test voltages used for terminal-to-terminal tests. Factory terminal-to-terminal test voltages are applied for 10 seconds at 4.3 times rates voltage rms for dc input, and at twice rated voltage rms for ac input. If terminal-to-case tests are made, refer to the manufacturer's instructions or ANSI/IEEE 18 for ac test voltages.

Affordable Wire Management, Exhibit No. EX1010
Case No. IPR2024-00182
Page 145 of 201

b. After being in service tests. These tests are only necessary in determining the operating condition of a power capacitor after exposure to possible damage or other trouble indications. The dielectric strength may be measured by applying the same voltage as given for the before service test. The capacitance can be determined by applying a known voltage and frequency of a good wave shape. Short-circuited or open-circuited capacitors will be indicated by this test. Tests for terminal resistance and liquid tightness may also be desirable, as covered in later paragraphs.

c. Capacitor bank automatic switching. Switched capacitor banks should be inspected for proper operation every year. The maintenance schedule given in table 13-2 is based on the indicated types of on-off controls. For oil switches, open and close operations between maintenance periods should not exceed 2,500.

Table 13-2. Capacitor bank oil switch maintenance[1]

Type of control	Maintenance schedule, years
Time clock.	3
Voltage.	3
Dual temperature.	5
Temperature only.	8
Time clock and temperature ..	8

From "The Lineman's and Cableman's Handbook" by Kurtz and Shoemaker, copyright 1992 by McGraw-Hill, Inc., used with the permission of McGraw Hill, Inc.

13-13. Terminal tests of power capacitors.

Terminal tests may be those measuring resistance, as recommended by ANSI/IEEE 18, or may be handbook-recommended insulation or voltage tests.

a. ANSI/IEEE 18 resistance tests. Two-bushing capacitors can be tested to determine whether their insulation resistance (in reference to terminal-to-terminal or terminal-to-case) is in agreement with a value recommended by the manufacturer. When an internal discharge resistor is present, however, the reading obtained will be that of the discharge resistor. This is much lower than the dielectric resistance, which may also need to be obtained from the manufacturer. This testing will indicate whether the internal discharge resistor is operable. Remember, that the internal discharge device provided in a capacitor is not a substitute for the recommended practice of manually discharging the residual stored charge before working on a capacitor.

b. Handbook tests. These are not standard industry tests, but have been recommended by facility engineers as a method of determining the capacitor condition.

(1) *Terminal-to-terminal voltage test.* The purpose of this test is to determine whether a capacitor unit is functioning in accordance with its rating. Capacitor units found to be internally defective are more economically replaced than repaired.

(a) Procedure. With the capacitor unit insulated from ground, apply a terminal-to-terminal voltage equal to the rated capacitor voltage, in accordance with figure 13-l. Voltage should be applied for one minute with the test circuit fused. Fuse rating should be that recommended for the capacitor, or if that size is not readily available, one rated twice the normal load current. Measure the voltage and current. The ammeter should be provided with a short circuiting switch. The switch should be opened only after it has been determined that no short circuit exists.

(b) Interpretation. Blowing of the fuse indicates a short-circuited capacitor. Absence of current indicates an open-circuited capacitor. Good capacitors should have current readings of 100 to 115 percent of rated value, with the case and internal temperature at 25 degrees C. Current readings above 115 percent of rated current may indicate an internal short or the presence of harmonics in the test voltage. If waveform of the test voltage is suspect, the test should be repeated using an alternate source of electric power.

(2) *Terminal-to-case insulation test.* The purpose of this test is to determine the adequacy of the insulation to ground of a given capacitor unit. This test may be applied to two bushing, single-phase capacitor units, but not to capacitor units where the case is used as a terminal.

(a) Procedure. With the capacitor unit insulated from ground, apply a voltage equal to twice rated voltage between case and terminals (all terminals connected together) in accordance with figure 13-2. Voltage should be applied for one minute, with the test circuit fused and containing sufficient impedance to limit the current, should the capacitor under test be shorted.

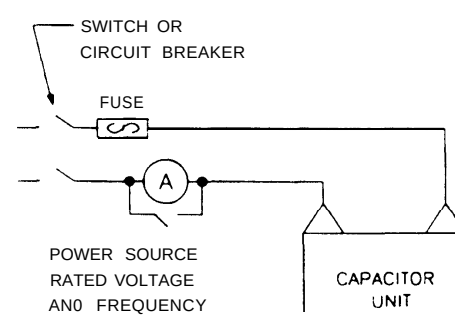

Figure 13-1. Terminal-to-terminal voltage test circuit.

Affordable Wire Management, Exhibit No. EX1010
Case No. IPR2024-00182
Page 146 of 201

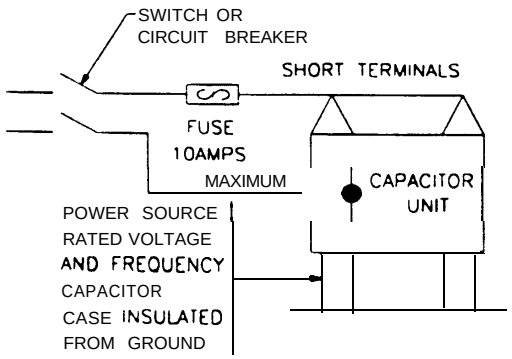

Figure 13-2. Terminal-to-case insulation test circuit

(b) Interpretation. Failure to pass this test indicates an internal flashover and the capacitor should be replaced.

13-14. Leak tests of power capacitors.

Capacitor cases do develop leaks. Since capacitor installations are normally made up of a number of individual units, it is sometimes difficult to ascertain the unit or units that are leaking.

a. Procedure. If the unit at fault cannot be found by visual inspection, the suspected capacitors should be removed; thoroughly cleaned; and placed in an oven for a minimum of *4* hours. The temperature of the capacitor case should not be allowed to exceed the manufacturer's recommendations.

b. Interpretation. Place the capacitors horizontally on a sheet of clean paper (brown wrapping paper is suggested) with the suspected point of leakage on the bottom. Leaky capacitors should be replaced.

Affordable Wire Management, Exhibit No. EX1010
Case No. IPR2024-00182
Page 147 of 201

CHAPTER 14

STORAGE BATTERIES

Section I--CONSIDERATIONS

14-1. Battery usage.

Storage batteries are used in exterior facility electrical distribution systems to provide a power supply to devices whose control response will be damaged by an electrical system power outage. This chapter describes station batteries as they are generally called, as opposed to uninterruptible power system batteries or automotive type batteries. A storage battery is composed of one or more rechargeable electrochemical type cells. Systems are designed for full-float operation, with a battery charger to maintain the battery in a charged condition. Batteries used for control of substation and power equipment are required to provide low currents for long periods and high currents for short periods. A battery's reserve capacity requirements are based on a duty cycle (usually an 8-hour operating time period) when all continuous and momentary loads must be supplied by the battery with no recharging available from the battery charger.

14-2. Battery types.

The two electrochemical types in general use for station batteries are lead-acid and nickel-cadmium. Construction types include vented (flooded) and valve-regulated (sealed) units. For specific information on a particular type, refer to the manufacturer's instructions. There are five basic components to a battery cell: the container, the positive plate (electrode), the separator or retainer, the negative plate (electrode), and the electrolyte.

a. Lead-acid units. Lead acid batteries have an acidic electrolyte solution of sulfuric acid (H_2SO_4). The active materials used are lead dioxide (PbO_2) for the positive plate, and sponge lead (Pb) for the negative plate. The active materials for both the positive and negative plates are incorporated in a plate structure composed of lead or a lead alloy. The NEC defines their nominal battery voltage at 2.0 volts per cell.

b. Nickel-cadmium units. Nickel cadmium batteries use an alkaline electrolyte (potassium hydroxide). The active materials used are nickel hydroxide for the positive plate and cadmium hydroxide for the negative plate. The NEC defines their nominal battery voltage at 1.2 volts per cell.

c. Vented batteries. Vented (flooded) cells are constructed with the liquid electrolyte completely covering (flooding) the closely spaced plates, so that there is a large volume of free electrolyte. The electrolyte maintains uniform contact with the plates. Vented units are characterized by a removable vent cap which allows the electrolyte to be checked and adjusted as needed. Overcharge will produce gases which vent through the cell, requiring regular water replacement. Vent caps must be accessible, so batteries are larger than valve-regulated types and are provided with flame arresters. Gassing requires ventilation to avoid explosive possibilities and possible corrosive damage to battery terminals.

d. Valve-regulated batteries. Valve-regulated cells are sealed, with the exception of a valve that opens periodically to relieve excessive internal pressure. To limit water consumption, cells are designed to provide recombination of charge gases by passing oxygen evolved from the positive plate over the negative plate, where the recombination reaction occurs. The valve regulates the internal pressure to optimize recombination efficiency (hence the term valve-regulated). The valve opens when the cell's internal pressure exceeds a set limit and once the pressure is relieved the valve closes and reseals. No cell check of an electrolyte level nor the specific gravity of each cell is required. These batteries are not maintenance-free as some 10 or more maintenance checks are still necessary. Outgassing of these batteries is low at normal charge rates, but it can occur when there is a battery or battery charger failure. Cells can pose a hazard if enclosed so as to inhibit cooling air, or installed so as to place them in the heat flow of electronics which may occupy the same enclosure.

14-3. Battery safety.

Safety precautions cannot be ignored, since every station battery installation presents hazards. The importance of using safety equipment, such as rubber gloves, goggles, aprons, and of having an eyewash water bottle present, cannot be overemphasized. The three major hazards are from the electrolyte in the battery, the gases emitted by the battery, and the potential electrical short circuit capability available from the battery's stored energy. Most persons trained to work in an electrical environment are aware that batteries are dangerous, but need to be warned and advised again as to the extent of the hazards posed by all station battery systems, regardless of size or type.

Affordable Wire Management, Exhibit No. EX1010
Case No. IPR2024-00182
Page 148 of 201

a. Warnings. All batteries contain an electrolyte which may be liquid and is corrosive. Lead-acid batteries contain diluted sulfuric acid and nickel-cadmium batteries contain potassium hydroxide. Direct contact with the electrolyte should be avoided as contact may result in severe chemical burns. Accidental contact must be removed immediately by washing and flushing with baking soda (bicarbonate of soda). This solution is beneficial in neutralizing either alkaline or acid electrolyte. Extreme care must be taken in the use of hydrometers or syringes to avoid accidentally squirting electrolyte at or on anyone.

(1) *Warning notice.* It is recommended that a warning notice be posed near the battery installation as shown in table 14-1. Use the first parenthesis as applicable to the electrolyte type. Fill in the fault current amperes.

(2) *Warning sign.* It is recommended that a warning sign be posted in advance of the installed table 14-1 warning notice. Figure 14-1 is a warning sign used by a manufacturer who provides small sealed, low-gassing type batteries. Note that this warning sign indicates *DANGER* even for what is represented as a small sealed-battery system. Particular attention must be given to the prevention of sparks or flames near batteries. The hydrogen gas produced by charging batteries is flammable in an atmosphere where the gas content exceeds 4 percent hydrogen gas. If the mixture contains more than 8 percent hydrogen, it can explode.

b. Electrolyte hazard. Battery rooms are required by OSHA to provide emergency-use quick-drenching facilities for the eyes and body within 25 feet of the work area. Permanent emergency eyewash and showers are recommended. Portable emergency eyewash and showers must be brought into the maintenance area if permanent facilities are not provided. Squeeze bottles can substitute for eyewash fountains, and canisters that resemble fire extinguishers can be fitted to provide an eyewash or a quick drench. Periodic inspection and maintenance of these devices are mandatory. Be sure to change the water as recommended to eliminate possible bacteria. Squeeze bottles are date coded and should be replaced before the expiration date. Exercise canister units periodically to prevent clogging of the head. Ensure that a good flow of water is available when it's really needed.

c. Explosive gas hazard. The NEC requires removal of possible explosive gas buildup, since all battery types can outgas. Check that gas accumulation is limited to less than 2 percent of the total volume of the battery room or enclosure. For flooded lead-acid batteries, the maximum hydrogen evolution rate is 0.000269 cubic feet (7618 cubic millimeters) per minute per charging ampere per cell at 77 degrees F (25 degrees C), one atmosphere. The maximum rate occurs when a fully charged battery has maximum current forced into it.

d. Electrical hazard. Most batteries are operated ungrounded, so touching a live part will not result in a shock. The real hazard exists when an accidental ground is already present and a person touches a live part. In this case, the person completes the circuit to ground and current will flow through the person. While personnel may recognize that this

Table 14-l. Battery room warning notice

Batteries contain (sulfuric acid) (potassium hydroxide solution). If the electrolyte is splashed on eyes, flush with clear water and consult a physician. If the electrolyte contacts the skin, flush with clear water. Storage batteries are high current sources. Accidental short circuits can cause severe arcing, equipment damage, battery explosion, and personal injury. This installation can deliver a fault current of 1,000 amperes. Do not use uninsulated tools or touch uninsulated wires or terminals. Remove conductive watches/rings/bracelets, and wear both eye protection and protective clothing when working on batteries. Keep batteries upright. Use tools with insulated handles. Do not smoke or permit naked flames near the battery. Do not wear clothes which can create static electricity. Switch off circuits before connecting or disconnecting the battery to avoid sparks. Be sure connections are tight before switching on. Two people should perform battery maintenance inspections, with only one person working on any battery at the same time.

Figure 14-1. Battery warning sign

Affordable Wire Management, Exhibit No. EX1010
Case No. IPR2024-00182
Page 149 of 201

hazard exists, they may not be concerned because nominal cell voltages are only 1.2 to 2 volts per cell. Another hazard occurs when there is an accidental connection between positive and negative points, which can cause arc or a possible battery explosion.

(1) *Possible effects.* Batteries in station systems often contain individual cells connected in series (to form a string), and may reach voltages as high as 250 volts. Consider the amount of short-circuit current batteries can deliver because of their low internal resistance. Batteries can deliver massive short-circuit currents, measured in the thousands of amperes. Such current can almost instantly make a wristwatch, screwdriver, or any other conductive path red hot or vaporize the metal. The short-circuit capability of any battery can be obtained from the manufacturer and it is recommended that it be posted as a part of the battery room warning notice (see table 14-14).

(2) *Accidental grounds.* It is not uncommon to find that a ground exists on a battery. This can occur when the electrolyte on top of a cell tracks across the cover, down the plastic jar, and contacts a metallic part of the rack. The electrolyte, being conductive, establishes a ground path.

(3) *Normal safety procedures.* When working around batteries, all normal safety procedures should be followed, including the use of protective equipment. Caution must be exercised in placing meters on top of batteries. Under certain conditions, meters with enclosures partially made of metal can cause a short circuit and sparks. Metal objects should never be placed on top of batteries, and metal tools used on batteries should be insulated to prevent accidental short circuits. Generally, a ground detector is provided as part of the dc system, most often in the battery charger. Be certain to check the ground detector before starting work. If an unintentional ground exists, it should be cleared before work begins.

(4) *Two-person teams.* Always have two persons assigned to perform battery maintenance inspections. One person takes the readings and the other records them. They should not work on different parts of the battery at one time because they could become two points, completing a circuit to ground.

14-4. General battery maintenance procedures.

Always follow the battery manufacturer's maintenance procedures and check warranty requirements. Battery temperature examples given are not justification for ignoring the temperature requirements given in this chapter for battery rooms or areas. Manufacturers will normally provide assistance in developing a maintenance program for batteries which they supply. All manufacturers have maintenance instructions for their cells and some will conduct maintenance seminars or presentations. This important source of information should not be overlooked. Also become familiar with procedures for maintenance, testing, and replacement of storage batteries, as described in ANSI/IEEE 450 and ANSI/IEEE 1106 for lead-acid and nickel-cadmium types, respectively.

a. Maintenance program. The maintenance program selected should address the specific needs of the battery installed and should be both consistent and regular. Recommended maintenance intervals should never be longer than those required by the manufacturer to satisfy warranty requirements. In addition, critical load requirements may dictate more frequent maintenance based upon the importance of the installation and the impact of a battery failure on the load it serves. Proper maintenance will ensure optimum battery life, assuming the battery has been properly sized and installed. When allocating time to battery maintenance, ensure that it is sufficient for the tasks to be performed. Small inaccuracies that can occur when personnel are rushed can result in useless data, and overlooking of other obvious problems. Wherever practicable, tests should be carried out in a manner that accomplishes one or more objectives at the same time. For example, a capacity test also can be used to check for high connection resistance.

b. Battery specifics. A maintenance program must address the specific battery installed. Although the tests and frequency of maintenance may be the same, there are subtle differences between batteries. For example, the nominal float voltage will vary between lead-antimony and lead-calcium cells. In addition, the total float (terminal) voltage will be different when the total number of cells provided varies (as for nickel-cadmium units) even though the nominal voltage per cell may be the same. For instance, a nominal 24-volt lead-acid battery system can be made up from 12 to 14 cells of the same type. Another consideration is that the float voltage used will vary with the nominal specific gravity of the cell.

(1) *Battery system replacement.* When a battery is replaced, the new battery often continues to be maintained in the same manner as the old one. However, the new battery may be of a different alloy or nominal specific gravity, or may contain a different number of cells. Maintenance personnel may not recognize the differences, which can lead to irreversible damage.

(2) *Battery condition.* Battery condition can be assessed based upon comparisons of current and

Affordable Wire Management, Exhibit No. EX1010
Case No. IPR2024-00182
Page 150 of 201

past data. Data collected during maintenance must always be corrected to the standard temperature reference, so that meaningful data comparisons can be made. Maintenance forms used to record data should be straightforward and must include provisions for making all corrections to standard values.

(3) *Inspection requirements.* Maintenance of a battery begins at the time of installation. The test data recorded at the installation acceptance test form the base set of values for the battery to which all later test data must be referenced. Storage batteries should be completely checked monthly (see section VI). Where experience indicates that scheduled inspections are insufficient to ensure battery reliability, the frequency of inspection should be increased as necessary. In cold weather conditions, more frequent inspection of batteries may be necessary. Routine inspection should include the checking and recording of all pertinent information, such as voltage, specific gravity, level of electrolyte, charging rate, internal and ambient temperatures, ventilation, and cleanliness.

c. Understanding requirements. In the following sections, general information on basic battery maintenance is presented for flooded lead-cell batteries. Flooded lead-acid batteries are discussed, since these are most often encountered. Valve-regulated lead-acid batteries and nickel-cadmium batteries are discussed in separate sections to the extent that their maintenance differs from that of flooded lead-acid cells. Periodic maintenance tasks are summarized in a following section.

Section II-FLOODED LEAD-ACID BATTERY MAINTENANCE

14-5. Visual inspections of batteries.

Visual inspections will indicate when cleaning is necessary and afford the opportunity to check cells for damage or evidence of improper charging or other mishandling. A flashlight or other localized unsparking light source is essential for inspecting cell components and connections and for checking for evidence of excessive gassing, mossing, sediment, and low electrolyte levels. Check that there is no battery vibration. Under abnormal operating conditions, hydration and frozen electrolytes can occur and if not recognized could cause irreparable damage.

a. Cell *and connection inspections.* The jars, plates, and connections should be closely inspected on each cell.

(1) *Jars.* Jars, covers, and cover-to-jar and cover-to-post seals should be checked for cracks or other structural damage. Failure of any seal will cause the electrolyte to seep out. A light source can be directed through clear jars to locate cracks or structural damage to the jar, cover, and seals. Such defects should be noted and the manufacturer should be consulted for remedial action.

(2) *Plates.* Unwrapped plates in a clear jar should be examined, as they show the battery's condition. The color of the positive plate of the lead-acid cell will vary from light- to deep-chocolate brown. The darker the color the most likely the battery has been overcharged. The negative plate will be gray in color, with a tendency to darken with age. Check and note any buckling, warping, scaling, swelling, or cracking of plates. Sulphation may be detected by shining a light source on the plates, which will reflect light from any sulphate crystals on the plate edges. If sulphation is visible, inspect the connections between the plates, straps (that is, the bus bar connecting plates to the post), and posts for obvious abnormalities. In areas of high seismic activity, connections sometimes fail if seismic acceptance testing was not properly performed.

(3) *Battery terminals.* Battery terminals may be inspected using a current/resistance (IR) probe. A connection carrying current with resistance will heat up. Retorquing cell connections without justification will lead to failure. If connection is loose or has high resistance (heating) it must be disassembled, cleaned and reassembled, including torquing. If the nut does not turn on the bolt freely, the bolt and nut must be replaced. A connection carrying current without heating does not need to be retorqued. A connection which is heating needs to be cleaned.

(4) *Other checks.* Check for electrolyte spillage, evidence of corrosion, and vent cap damage, and correct any problems. Examine cables connecting the battery to the battery charger and those cables used as intercell or intertier connectors, to ensure there is no strain on the cell posts, and to check that terminal posts and connections are clean.

b. Excessive gassing. Although some gassing on recharge is normal, excessive gassing can indicate overcharging, and should always be noted. A lead-acid battery begins to gas when the cell voltage reaches approximately 2.30 volts. Outgassing, when a cell is on open circuit or on float charge, may be an indication of high local action and undercharging. The gas coming from the negative plate is not generated, but is squeezed out of the expanding active plate material by the sulphate formed as the cell discharges. Most local action takes place at the negative plates, and the positive plates may remain well charged. As uniformly discharged positive and negative plates will not have a large drop in specific-gravity; a specific-gravity check may not de-

Affordable Wire Management, Exhibit No. EX1010
Case No. IPR2024-00182
Page 151 of 201

tect this action. Cells which do not gas during charge may indicate problems such as undercharge, short circuits in the cell, or impurities in the electrolyte.

c. Mossing. Mossing of lead-acid cells is caused by overcharging, or charging at excessively high rates. The manufacturer may provide moss shield protection on the top of the plates for some cell constructions. Mossing results from the accumulation of a sponge-like material on top of the negative plates or straps. The material is shed predominantly from the positive plates and is carried off by gassing. If deposited on the positive plates, gassing simply washes it off again, but the material will adhere if deposited on the negative plates. Over time, the negative plates build up a sufficient deposit to bridge and make contact with positive plates, causing partial shorts. If mossing is found during an inspection, expect to find excessive sediment as well.

d. Sediment. Observing quantity and color of sediment in clear lead-acid battery jars also indicates the battery's condition.

(1) *Excessive sediment.* Excessive sediment usually indicates overcharge or charge at excessively high rates. The sediment from a well maintained cell may look like a layer of dust on the bottom of the jar. The sediment from a poorly maintained cell may completely fill the space provided under the plates and resemble hills. Partial short circuits will occur when the sediment hills reach the plate bottoms.

(2) *Color of sediment.* Dark or chocolate brown sediment hills beneath the positive plates indicates continuous overcharge. Gray sediment in hills beneath the negative plates indicates continuous undercharge. Excessive but somewhat mixed sediment hills, showing both positive and negative materials, indicate the battery has probably undergone random periods of undercharge and overcharge. Where excessive sediment is noted, examine cells for mossing.

e. Battery racks. Battery racks should be checked during visual inspections. Included are checks for structural integrity, corrosion, and proper grounding.

(1) *Corrosion.* The jars normally rest on corrosion-resistant supports or plastic jar-supporting channels installed on the rack structure. Check these and all items composing the rack for corrosion.

(2) *Seismic.* If the battery rack is a seismic type for installations requiring earthquake protection, additional checks of the rails and spacers must be made. Seismic racks use rails and spacers to prevent movement of cells during an earthquake, and the spacers function to prevent adjacent cells from knocking together. The side rails are covered by a corrosion-resistant cover (such as a plastic channel) where they touch the jars. Check to ensure that all side rails, end rails, and spacers are in place, and that bolts are properly torqued. Portions of the rack seismic equipment may occasionally be disassembled to allow maintenance to be performed on the battery or for cell replacement. The ability of the rack to protect the battery during an earthquake will be impaired if rack reassembly is not properly tightened.

(3) *Grounding.* Check that ground connections are correct, tight, and uncorroded.

f. Damaging actions to be noted. Low electrolyte levels, vibration, hydration, or frozen electrolyte can often damage batteries beyond repairability and such batteries should be noted for prompt replacement.

g. Low electrolyte levels. Water should be added to cells when inspection reveals electrolyte levels below the high level line. The manufacturer should be consulted immediately about cells where the electrolyte level is below the plate tops. Water should not be added to these cells until the manufacturer has agreed that this is the proper action or has inspected the cells and recommended filling. Electrolyte levels below the plate tops can cause permanent cell damage, and the cell may need to be replaced. A record of the amount of water added to each cell should be kept and checked with the battery manufacturer's normal cell water consumption requirement. Lead-antimony batteries normally experience an increase in water consumption with age. Water consumption in excess of the manufacturer's requirement is an indication of overcharging. A cell that has been recently moved or transported should not have water added until it has been placed back on charge for the period of time recommended by the manufacturer. If the plates were exposed while moving cells, consult the manufacturer for recommended action. Vibration during movement will tend to free hydrogen bubbles attached to the plates. The loss of these bubbles will cause a decrease in the electrolye level. Once the cell is installed, the bubbles will reappear, and the electrolyte level will increase. Never add acid (or alkali) to a cell, nor any additive which claims to rejuvenate cells.

(1) *Vibration.* Check the surface of the electrolyte for indication of any battery vibration. Battery life will be reduced in proportion to the length of time and action of any severe systematic vibration. Excess sediment, when there is no apparent reason for that sediment (the battery has not experienced overcharging or undercharging), can indicate recur-

Affordable Wire Management, Exhibit No. EX1010
Case No. IPR2024-00182
Page 152 of 201

rent vibration. Where signs indicate vibration, reexamine the battery supporting/restraining system and eliminate this source of damaging activity.

(2) *Hydration.* Overdischarge of a lead-acid battery without immediate recharge can cause hydration. This can happen if the battery charger is shut down or if a lead-acid battery is kept in storage for an extended period without recharging. The cell must be replaced if irreversible damage is indicated, for example, by a whitish "bathtub ring" visible approximately halfway up a clear jar. The lead and lead compounds in the cell dissolve in the water released during overdischarge and form lead hydrate, which is deposited on the separators. Thousands of short circuits between the positive and negative plates will occur when the battery is recharged after hydration. Hydration can also occur when a dry-charged battery is mistakenly filled with water instead of the electrolyte solution.

(3) *Frozen electrolyte.* Freezing of operating batteries is unlikely if care is taken when water is added. When water is added to a battery in freezing temperature, the battery must be charged to mix the water with the electrolyte, or the water will remain on top and freeze. Nominal 1.200 specific-gravity lead-acid electrolyte starts forming slush at approximately minus 20 degrees F (minus 29 degrees C). But, during discharge, a lead-acid cell's specific gravity decreases, and there is a resultant increase in the temperature at which slush could form. Freezing would begin at 16 degrees F (minus 8 degrees C), if the battery's specific gravity decreased to 1.100. Irreparable damage occurs when ice crystals form within the battery, even though damage may not be visible. In essence, the frozen electrolyte will cause the active materials to expand and lose contact with the grid. The frozen electrolyte can also cause structural damage to the jar.

14-6. Measurements of battery condition.

Simultaneous measurements of specific gravity, voltage, and temperature can identify the condition of the cell. Measurements and tests are often performed on individual cells, referred to as pilot cells, instead of on the entire battery.

a. Pilot cells for voltage and specific gravity measurements. One or more pilot cells may be chosen to reduce the time necessary to perform inspections and tests, while still affording some degree of confidence in the battery's condition. The selection is arbitrary, but one cell per rack section should be chosen, so that all levels are represented. Sometimes the pilot cells are selected after a quarterly check of all of the cells' voltages and specific gravities have been made. Criteria for selection include cells with the lowest specific gravity, lowest voltage, highest specific gravity, highest voltage, or combinations of both. Pilot cells should be rotated periodically, usually on a monthly basis. One reason for this is to limit electrolyte loss. Whenever a cell's specific gravity is read, some small amount of electrolyte will remain in the hydrometer. For a frequently read pilot cell, this loss of electrolyte, although very small, could ultimately affect the cell over a long period of time.

h. Temperature readings. Electrolyte temperatures should be read and be recorded any time specific-gravity or voltage readings are taken. The specific gravity of the electrolyte varies with temperature. In order to compensate for this effect, the temperature needs to be recorded at the same time that the hydrometer is read.

(1) *Differential temperature.* Differential electrolyte temperatures, greater than 5 degrees F (2.75 degrees C), between cells can be a problem. This problem normally occurs when one portion of a battery is located near a localized heat source, such as a sunny window or when a battery rack with more than two steps or tiers is used. A battery temperature differential will cause some cells to be overcharged and some cells to be undercharged.

(2) *Ambient temperature.* Ambient temperature of the battery area should be read and recorded periodically, even where the room or area is environmentally conditioned. Battery performance is based upon the cell electrolyte temperature, which can differ from the room ambient temperature. Optimum battery performance is obtained when electrolyte temperature is maintained at 77 degrees F (25 degrees C).

(3) *Recording temperature.* Some hydrometers have a thermometer and table showing the temperature correction that should be applied to the reading. If the hydrometer being used does not have a thermometer, a battery thermometer should be placed into the cell and the electrolyte temperature recorded.

(4) *Temperature correction.* Comparisons are made for readings corrected to 77 degrees F (25 degrees C). The temperature correction for lead-acid batteries requires adding one point (.001) to the hydrometer reading for every 3 degrees F (1.67 degrees C) above 77 degrees F (25 degrees C) and subtracting one point for every 3 degrees F (1.67 degrees C) below 77 degrees F (25 degrees C).

c. Specific-gravity readings. Specific gravity is a good indication of state-of-charge of lead-acid cells. Corrections for electrolyte temperature and level must be applied to adjust the specific-gravity readings to a standard reference temperature. Level corrections can vary for each cell type and should be obtained from the manufacturer. Note that specific-

Affordable Wire Management, Exhibit No. EX1010
Case No. IPR2024-00182
Page 153 of 201

gravity readings, taken within 72 hours of the termination of an equalizing charge or a water addition, will not be correct. These specific-gravity readings are inaccurate because the added water has not been properly mixed with the existing electrolyte solution and stratification occurs.

(1) *Differences in specific gravity.* Lead-antimony or lead-calcium battery electrolytes do not always have the same nominal specific gravities, even if the plate alloy is the same. Maintenance personnel should not install a replacement cell which requires a specific-gravity electrolyte different from the existing cells. In similar cells with different specific gravities, the higher specific gravity cells will have higher float voltage requirements, provide increased local action, and consume more water. Some application considerations may also cause a manufacturer to vary the nominal 1.200 specific gravity for stationary cells. High or low ambient temperatures influence specific-gravity requirements. A higher specific gravity electrolyte is provided when ambient temperatures are extremely low. This increases cell performance and serves to lower the freezing point of the electrolyte. Similarly, with high ambient temperatures, normally above 90 degrees F (32 degrees C), a lower specific-gravity electrolyte is provided to reduce losses and maintain expected life.

(2) *Comparisons.* The measured specific gravity should be corrected to the reference temperature and compared to previous data. Readings should be uniform, with a minimum different between the high and low readings. Where specific gravities vary considerably over the battery, they are termed "ragged" and corrective action is required, as covered in ANSI/IEEE 450 and ANSE/IEEE 1106.

(3) *Method of measurement.* With all cells connected in series, the specific gravity reading of one cell, known as a pilot cell, indicates the state of discharge or charge of the whole battery. When a reading is being taken, the nozzle of the hydrometer syringe is inserted into the cell, and just enough electrolyte is drawn from the cell to float the hydrometer freely without touching at the top or bottom. Read the specific gravity on the float, making sure to obtain this reading at the bottom of the meniscus (the bottom of the liquid-surface curvature). For correct readings be sure to hold the hydrometer in a true vertical position to avoid the float's touching the cylinder walls. After testing, the electrolyte should ways be returned to the cell. Cell readings can be inaccurate if taken sooner than 72 hours after equalizing or water corrections.

d. Voltage readings. The open-circuit voltage of a lead-acid cell is a direct function of specific gravity and can be approximated by equation 14-1. This relationship holds for cells that are truly open-circuited (that is, there is no current flowing through the cell). The battery should have a well-mixed electrolyte and been off charge for more than 16 hours. A voltage below that expected by equation 14-l indicates there may be a problem.

$$\text{Open-circuit voltage} = \text{Specific gravity} + 0.84 \qquad \text{(eq. 14-1)}$$

e. Connection resistance. A connection resistance check is very important but is often neglected, even though it can be conducted with the battery in service. The instruments normally used are the same as those used to measure a power circuit-breaker's contact resistance. A moderate to high current is passed through the connection under test and the voltage drop is measured and converted at the meter output to microhms. These measurements are difficult to perform, especially when the cells have multiple posts per cell and multiple intercell connectors per post. In these cases, multiple measurements per cell must be made or there will be significant errors in the measurement. The test, performed at the initial installation, should be repeated periodically and the results compared. High connection resistance, if not detected, can cause severe damage, especially in a stationary cell required to discharge at a high current rate for a period of time. High connection resistance can actually melt battery posts.

14-7. Battery maintenance specifics.

The battery installations must be kept clean. Measurements which determine the need for water or electrolyte additions are required. Pilot cell comparisons are necessary. Battery charging and water quality help in providing the optimum operation and life for battery installations.

a. Cleaning. Keep batteries; connections, and battery racks clean at all times.

(1) *Battery cells.* Jars or covers should be wiped with a clean lint-free cloth or wiper moistened with clean water. The cloth should be moistened with a suitable neutralizing agent to clean any electrolyte spilled on the cover or jar. Remove moisture with a clean dry cloth or wiper, once cleaning is finished. Never use solvents, detergents, oils, waxes, polishes, or ammonia to clean the jars, as this may cause permanent damage to the jar. For lead-acid batteries; use tin acid-neutralizing agent consisting of a soda solution. The soda solution should consist of one pound (454 grams) of bicarbonate of soda to one gallon (3.785 liters) of water. Other neutralizing agents may damage the jar. The solution must not get into the cells.

(2) *Battery connections.* Terminal posts and connections should be wiped with a clean lint-free

Affordable Wire Management, Exhibit No. EX1010
Case No. IPR2024-00182
Page 154 of 201

cloth or wiper moistened with a suitable neutralizing agent. Cleaning charged batteries can present a safety hazard if heavy corrosion is present. Corroded connections should be unbolted and cleaned. Connector bolts should be tightened as required to ensure a good connection. Suitable means to continue service should be arranged for batteries which must remain in service. This may mean jumpering out cells being worked on and jumpering in other cells, to maintain system voltage requirements. Normally, lowering of voltage, jumpered out by removal of some cells, will not degrade the ability of the battery to supply the system, if the number jumpered out is in accordance with the systems manufacturer's recommendations. Follow the manufacturer's directions when cleaning heavily corroded posts and connectors. Do not clean the surfaces so rigorously that the plating is removed. A plastic bristle brush can be used. Once the connection is clean, a thin coating of an approved corrosion inhibitor (such as No-Ox-Id) should be applied. Never use anti-corrosion sprays in aerosol containers. Observe the manufacturer's recommended torque values when remaking the connection.

(3) *Battery vent caps.* Vent plugs must be in place with their gas escape holes open. Flame arrestor vent caps should be cleaned periodically by thoroughly rinsing in clean, clear water. No solvents or detergents should be used.

(4) *Battery racks.* Clean any corrosion found and recoat the battery rack with a chemical-resistant coating, in accordance with the manufacturer's instructions. Replace cracked or broken corrosion-resistant rack covers. Consult the manufacturer if replacement spacers are required. Spacers are usually of foam plastic as they must be corrosion-resistant and nonswelling. Swelling of spacers can damage the battery jars. Recheck and retorque all rack bolts and anchoring bolts, steel plates, and welds. Note and correct any deficiencies in accordance with the manufacturer's recommendations/drawings.

b. Trouble indication comparisons. If two successive monthly readings for a particular cell are low in either voltage or specific gravity, a check should be made to see that this cell gasses properly while on charge. If it does, no action needs to be taken unless the reading goes still lower the next month. A lower reading indicates an insufficient charge, a short circuit, or impure electrolyte. The trouble should be corrected promptly. The manufacturer should be consulted if necessary. The full-charge specific gravity decreases as a battery cell ages. Although no definite value can be given, this decrease should not be more than a few points per year and can usually be overlooked if the trend is regular.

c. Proper charging. The proper charging of a battery is as important as any other maintenance consideration, since a battery cannot function without a charger to provide its original and replacement energy.

d. Water quality. Use of distilled or deionized water is recommended to eliminate the possible addition of foreign contaminants, which will reduce cell life and performance. The battery manufacturer will provide information on the maximum allowable impurities in water used for maintaining electrolyte levels if it is desired to test whether a local water system provides the desired water quality. Approved battery water should be stored in chemically inert, nonmetallic containers.

(1) *Additives.* Nothing but approved battery water should be added to storage batteries. Never add acid, electrolyte, any special powders, solutions, or jellies. Special powders, solutions, or jellies may be injurious; and have a corrosive or rotting action on the battery plates, reducing the voltage and capacity of the cells. The use of such additives will void the battery manufacturer's warranty.

(2) *Impurities.* Impurities in the electrolyte, beyond the manufacturer's maximum levels will cause irregular cell operation and should be removed as soon as discovered. If removal is delayed and foreign matter becomes dissolved, the battery should be replaced immediately. It may be possible to replace the electrolyte, but only if the manufacturer recommends a procedure to correct the specific condition which has occurred.

14-8. Testing of batteries.

Do not overtest. Frequent testing will shorten the service life. ANSI/IEEE 450 and ANSI/IEEE 1106 require a performance test within the first 2 years of service (a constant current capacity test, which discharges a battery to a designated terminal voltage, to detect any change in the capacity determined by the initial acceptance test). Subsequent performance tests are recommended at 5-year intervals, until the battery shows signs of degradation or has reached 85 percent of the service life expected. Degradation of lead-acid batteries is indicated when battery capacity drops more than 10 percent below its capacity on a previous performance test or is less than 90 percent of the manufacturer's rating. Perform tests in accordance with ANSI/IEEE 450 requirements.

a. Capacity tests. The only true indication of battery condition and capacity is a discharge test. Stationary cells designed for float operation should have no more than two deep discharges per year. The duration of these tests, test setup, personnel needed, and other requirements make frequent test-

Affordable Wire Management, Exhibit No. EX1010
Case No. IPR2024-00182
Page 155 of 201

ing impractical. Another consideration is that the battery is not available to serve its load during a capacity test, requiring a system protective shutdown or provision of a redundant/replacement battery. For these reasons, voltage and specific gravity tests are used to periodically monitor the battery condition. Recognize that these readings indicate state-of-charge, but do not indicate the capacity of the battery.

(1) Use of *capacity tests.* The results of the capacity test can be used to determine the need for a replacement battery. Battery test sets are currently available from a number of manufacturers, or the user can fabricate a load bank (sometimes actual loads can be used). Three types of battery capacity tests are described in the standards: acceptance, performance, and service tests. Of these, the last two are required for normal maintenance testing.

(2) *Comparison of results.* It is important to compare the results to prior test data to establish a trend. Battery capacity may be less than 100 percent of nameplate rating during the first few years of operation, unless 100 percent capacity at delivery was required by the purchase specification. The capacity of a new battery (normally 90 to 95 percent of nameplate) will rise to its rated value after several charge-discharge cycles or after several years of float operation.

b. Test equipment. Test equipment used in battery maintenance is described in table 14-2. Special equipment may be available or may be rented, dependent upon the site's maintenance capabilities. Normal test equipment and safety equipment should already be available as a part of the electrical maintenance equipment. The use of safety equipment to protect personnel is mandatory; it should be available to maintenance personnel at all times. Periodically, recalibrate all devices as necessary. A number of new instruments are available which can continuously monitor a battery. These are often provided for systems serving very critical loads. One final caution is that instruments inserted into electrolyte should not be used for different battery types. For example, a hydrometer used on a lead-antimony battery should never be used on a lead-calcium or a nickel-cadmium battery. This cross use of equipment will cause cell contamination.

Table 14-2. Suggested test accessory list for battery maintenance

Item	Disposition
Battery capacity test set.	Special
Battery conductance tester	Special
Battery lifter	Special
Metering of dc (located on the battery charger).	Normal
Hydrometer set	Normal
Microhmmeter	Normal
Portable infrared temperature measuring device	Normal
Terminal protective grease.	Normal
Thermometer set	Normal
Torque wrench	Normal
Chemical-resistant gloves.	Safety
Goggles and face shield.	Safety
Protective aprons or suits and shoes.	Safety
Rubber matting	Safety

Section III-FLOODED LEAD-ACID BATTERY CHARGING

14-9. Battery charging precautions.

Batteries are normally connected to their permanent charging equipment, but there may be occasions where testing or charging of new batteries requires connection to a test-shop charging device.

a. All charging. The following precautions will always be taken:

(1) Use tools with insulated handles.

(2) Prohibit smoking and open flames, and keep possible arcing devices removed from the immediate vicinity of the battery.

(3) Ensure that the load test leads are connected with suficient cable length to prevent accidental arcing in the vicinity of the battery.

(4) Ensure that all connections to load test equipment include short-circuit protection.

(5) Ensure that battery area ventilation is operable.

(6) Ensure unobstructed egress from the battery area.

(7) Avoid the wearing of metallic objects such as jewelry.

(8) Neutralize static buildup just before working on batteries by making contact with the nearest effectively grounded surface.

(9) Remove vent plugs from cells only to take readings or add water.

(10) Ensure that there are no unintentional grounds.

b. Test-shop charging. Use only direct-current equipment having the proper voltage. Connect the positive terminal of the charging circuit to the positive terminal of the battery and the negative terminal to the negative terminal.

14-10. Battery charging considerations.

The most desirable situation is for the battery to be operating fully charged. The approximate state of battery charge can be determined by the amount of charging current going into the battery if the connected- load is constant. Initially, the charging current, read at the charging ammeter, is a combina-

Affordable Wire Management, Exhibit No. EX1010
Case No. IPR2024-00182
Page 156 of 201

tion of the load current plus the charging current. The charging current will decrease and eventually stabilize when the battery is fully charged. If the connected load is variable, the battery voltage needs to be monitored. If the voltage across the pilot cell is stable for 6 consecutive hours, the battery is 100 percent charged. A constant current level for 3 consecutive hours indicates a charge of 95 to 98 percent.

a. Initial charge. Initial charge for placing a new battery in service is covered in section VIII.

b. Recharge. Following a discharge, all batteries should be recharged as soon as possible. To do this as quickly as possible, the battery charger output voltage is raised to the highest value that the connected system will permit.

14-11. Normal floating battery charge.

The floating (trickle) charge method is commonly used for returning the full charge on station batteries permanently connected to battery chargers. The floating charge rate is the sum of the low current (trickle rate) required to counteract internal battery losses, plus the average current requirements for the rest of the circuit. The required floating current is provided automatically, when the proper voltage is supplied to the battery.

a. Float action. The float-voltage point should just overcome the battery's trickle rate and cause the least amount of corrosion and gassing. Ambient temperature differences will affect the charging ability of the selected float-voltage level. The recommended float voltages range from 2.25 to 2.28 volts per cell. Select any volts-per-cell value within this range that is equal to the average volts per cell in a series string. The excess energy of too high a float voltage results in loss of water, cell gassing, accelerated corrosion, and shorter cell life. To eliminate such actions, on daily or frequent discharges, the charge is stopped slightly short of a fully-charged condition. However, permissible cell manufacturing tolerances and ambient temperature influences will cause individual cell-charge variations.

b. Recharge requirements on loss of ac input. Providing the precise amount of charge on each and every cell for each and every recharge (caused by loss of ac input to the battery charger) is impractical for a continuously-floating battery operation. An overlong interval would be required to restore full charge on a deeply discharged battery if the battery charger remained at the low float voltage rate. To shorten the recharge period, a higher voltage charging rate is usually provided, either automatically or manually, This recharge is known as an equalizing charge.

c. Float voltages. Float voltages are directly related to cell type and plate alloy, as well as to the specific gravity of the cell. The higher the specific gravity, the higher the minimum float voltage must be. This ensures that sufficient charging current is available to overcome the increased local action. Too high a float voltage will result in overcharging and reduce battery life. A slightly higher float voltage is sometimes selected for maintenance purposes to reduce or even eliminate the need for periodic equalizing charges required because of nonuniform cell voltages.

14-12. Equalizing battery charge.

An equalizing charge is an extended charge to a measured end point on a storage battery cell to ensure complete restoration of the active materials in plates of the cell. Equalizing charges are provided after a battery discharge or for periodic maintenance. Equalizing voltages are selected by the battery chargers equalizing timer, as covered in section VII. Equalizing charges may need to be given a monthly check.

a. After discharge equalizing. An equalizing charge is required after any battery discharge. Although it is called an equalizing charge, it is basically a recharge, at about a 10 percent higher voltage, than the float voltage to restore the discharged battery to a fully charged state within a reasonable length of time.

b. Periodic equalizing. Lead-acid battery individual cell voltages will begin to drift apart, even if the battery is not discharged. A manually set charging rate will be necessary to "equalize" the voltage irregularities. Nonuniformity of cells can result from a low float voltage due to improper adjustment of the battery charger, a panel voltmeter that is reading an incorrect output voltage, or variations in cell temperatures greater than 5 degrees F (2.75 degrees C).

(1) *Provision.* Equalizing voltages should be given if the float voltage of the pilot cell is less than 2.20 volts per cell or more than 0.04 volts per cell below the average of the battery. Equalizing voltage is required if the individual pilot cell voltages show an increase in spread since the previous readings, or if the periodic check of all cell voltages reveals a difference of 0.04 volts between any cell and the average cell voltage.

(2) *Action. An* equalizing charge is made at a rate not higher than the normal charging rate of the battery. It is continued until all the cells gas freely and any low cells are fully charged. Low cells are usually found in the warmest section of the battery. They normally have the lowest voltage while on

Affordable Wire Management, Exhibit No. EX1010
Case No. IPR2024-00182
Page 157 of 201

charge, or a lower specific gravity between equalizing charges when compared with adjacent cells.

c. Charging voltage. Battery voltage should be increased for a definite period of time as shown in table 14-3. The highest voltage that circuit and equipment limitations will permit should be used. A continuous charge is preferable, but intermittent charging may be necessary to conform to working schedules. In any case, the charge must be continued until all cells gas freely. Raising the voltage, particularly to the higher values of table 14-3, should be done gradually to avoid excessive currents. After completing the equalizing charge, the charging voltage should be reduced slowly to below the floating value and the ammeter should be watched to avoid reversal of the current to the charging source. After a few minutes, the voltage should be increased to the floating value. Do not wait for the battery voltage and current to stabilize at precharge values.

d. Charging current. Actual battery charging current depends on temperature, battery age, and recent use of the battery. Therefore, specific charging current values cannot be given. As a general guide, at its optimum operating temperature, current flowing to a fully charged battery, that has been under constant voltage of 2.15 volts per cell for approximately 1 hour or more, should be between 0.25 and 1.0 percent of the 8-hour rate of the battery At a higher temperature, or when there has been a recent discharge, an increase in current is required. At lower temperatures, if the battery has been subject to a higher voltage, a lower current will be observed which may flow temporarily in the discharge direction. If the trickle rate is consistently less than 0.25 percent or more than 1.0 percent of the 8-hour rate of the battery, the meter should be checked. A permanently connected ammeter in the battery circuit is impracticable, because any high discharge currents would pass through the meter in a reverse direction.

Table 14-3. Equalizing charge

Battery voltage per cell (volts)	Battery voltage for 60 cells (volts)	Length of monthly Charge (hours)
2.42	145	3 to 8
2.39	143	4 to 12
2.36	142	6to 16
2.33	140	8 to 24
2.30	138	11 to 34

Section IV-VALVE-REGULATED LEAD-ACID CELL BATTERIES

14-13. Valve-regulated cell differences.

Valve-regulated sealed lead-acid cells are not installed in transparent jars like traditional cells. Plates are not visible, and the electrolyte is not accessible.

a. *Maintenance.* These batteries are neither sealed nor maintenance-free. The cell cannot be considered sealed as a pressure relief valve is provided to open when the cell's internal pressure exceeds a set limit. Once the pressure is relieved the valve closes and reseals. Cell which do not reseal but leak may require replacement. For this type of construction there is no need to check the electrolyte level nor the specific gravity of each cell. Other battery maintenance requirements are still necessary, such as visual inspection, cleanliness, cell voltage resistance, charging, capacity testing, and others previously covered. Outgassing of these batteries is low at normal charge rates, but it can occur when there is a battery or a battery charger failure. Do not fully enclose cells in any manner which inhibits cooling air, and do not place them in the heat flow of electronics which may occupy the same enclosure. For safety reasons these batteries require the necessary air changes covered earlier.

b. Types. There are two types of cells commercially available: the absorbed (or starved) electrolyte cell and the gelled electrolyte cell. Both operate to enhance a recombination of hydrogen and oxygen back to water. Properly charged, there is a minimal loss of evolved hydrogen and oxygen; therefore, no water needs to be replaced during the battery's expected life. Charging above the manufacturer's recommended rating will result in venting hydrogen and oxygen from the cell and, if prolonged, will cause premature failure. Gelled electrolyte cells are normally operated in a vertical orientation; however, some manufacturers can-produce a cell which can be operated horizontally.

14-14. Charging of valve-regulated cells.

Charging of valve-regulated sealed lead-acid cells is similar to charging of flooded cells, but the charging voltage must be monitored more closely. Normally, the cells operate on float charge without the need for a periodic equalizing charge. Recharge times are relatively short when recharges are required. Temperature compensation of the float voltage is more critical than 'for flooded cells, and a temperature-compensated battery charger should be utilized.

14-15. Temperature compensation for valve-regulated cells.

Failure to temperature-compensate the float voltage can cause premature cell failure. The recommended float voltage is 2.25 volts per cell at 77 degrees F (25 degrees C). The float voltage may

Affordable Wire Management, Exhibit No. EX1010
Case No. IPR2024-00182
Page 158 of 201

need to be increased to 2.33 volts per cell if the ambient temperature is 55 degrees F (13 degrees C); and may need to be decreased to 2.18 volts per cell if the ambient temperature is 95 degrees F (35 degrees C). Consult manufacturers' catalogs for specific values for their cells. Ripple content of the battery charger output must also be considered Ripple voltage limits are specified by some battery manufacturers on their cell data sheets. Excess ripple may reduce the expected life of the battery, particularly when the battery has a low internal resistance.

Section V-NICKEL-CADMIUM CELL BATTERIES

14-16. Description of nickel-cadmium batteries.

The nickel-cadmium technology results in more expensive batteries but these batteries are resistant to mechanical and electrical abuse; will operate well over a wide temperature range; and can tolerate frequent shallow or deep discharging.

a. Construction. Nickel-cadmium (NiCad) batteries may be flooded cell type; valve-regulated cell type, or sealed cells.

(1) *Flooded cells.* These units utilize plates made of nickel-oxide for the positive electrode and cadmium for the negative electrode. The electrolyte is an alkaline solution of potassium hydroxide which does not take part in the cell reaction. Accordingly, its specific gravity does not change during charge or discharge, and the electrolyte retains its ability to transfer ions irrespective of the charge level. The majority of cells used in station battery applications are of the vented type. During discharge, vented-type cells can produce hydrogen gas and oxygen gas in a potentially explosive mixture which must be adequately exhausted. Since the gas is free from corrosive vapors, a dedicated battery room is not required, although it is still recommended.

(2) *Value-regulated cells.* These are similar in construction to the vented types, except that their design allows evolved gases to combine and thereby reduces water losses.

(3) *Sealed cells.* Because of their limited capacity, sealed cells without valve-regulation are normally used only for backup of electronic devices.

14-17. Requirements for nickel-cadmium batteries.

In general, all of the procedures and tests described for flooded lead-acid cell batteries are valid for nickel-cadmium batteries, except for specific gravity. The nickel-cadmium electrolyte is a solution of potassium hydroxide in water with a specific gravity between 1.180 and 1.200, depending upon the manufacturer. The electrolyte does not enter into the reaction of the nickel-cadmium cell. Therefore specific gravity is not an indication of state-of-charge and specific-gravity readings are not part of normal routine maintenance. If readings are taken, the temperature correction for the electrolyte is the same as for lead-acid batteries. The electrolyte in a nickel-cadmium cell with a specific gravity of 1.190 will start to freeze (slush) at approximately minus 10 degrees F (minus 23 degrees C). Occasionally, grayish-white deposits of potassium carbonate may be seen on the cell tops. These deposits form because the electrolye entrained in the escaping gas reacts with the carbon dioxide in the air. Although not corrosive, this deposit is a conductor when damp and needs to be removed from the battery.

a. Parameters. The maintenance procedures for flooded lead-acid cell batteries, discussed previously, also apply to nickel-cadmium cell batteries if the parameters are changed to those appropriate for alkaline cells. Float voltages for nickel-cadmium cells are significantly different from those for lead-acid cells. For the same battery terminal voltage, the number of cells will be greater, because a lead-acid battery is a nominal 2-volts per cell while a nickel-cadmium battery is a nominal 1.2-volts per cell. Degradation of nickel-cadmium batteries or excessive capacity loss is indicated when the battery capacity has dropped more than 1.5 percent of rated capacity per year from its previous performance test capacity. Thereafter, annual performance tests must be provided in accordance with ANSI/IEEE 1106 requirements.

b. Temperature. Nickel-cadmium batteries are less affected by temperature than lead-acid batteries. They can sustain high temperatures more easily, because the chemistry in the active materials is relatively stable. For example, at 90 degrees F (32 degrees C) the normal life of a nickel-cadmium cell is reduced by about 20 percent, compared with a reduction of about 50 percent for a lead-acid cell. With a normal electrolyte, the battery will operate at temperatures as low as minus 30 to 40 degrees C. With a higher specific gravity electrolyte, it will operate at even lower temperatures. The available capacity is reduced at low temperatures, but at minus 40 degrees C a nickel cadmium battery can still deliver 60 percent or more of its rated capacity.

c. Memory effect. Nickel-cadmium cells charged at very low rates are subject to a condition known as a "memory effect." Repeated shallow cycling, to ap-

Affordable Wire Management, Exhibit No. EX1010
Case No. IPR2024-00182
Page 159 of 201

proximately the same depth of discharge, leads to continual low-rate charging and results in a loss of surface area in the negative active material, due to the growth of large crystals. This increase in the cell's resistance produces a grater voltage drop. The result is a reduction in the effective reserve time of the system. The memory effect can be erased by providing a complete discharge followed by a full charge with constant current. This breaks up the crystalline growth on the plates. The conditions of station operation will rarely lead to this type of cycling, but users should be aware of the cause and the cure.

d. Electrolyte level. Vented type units will need to have the electrolyte level checked, even though a specific gravity reading may not be required.

(1) *Electrolyte level.* Caution must be taken when handling the electrolyte. The electrolyte level in all cells should be checked monthly. The maximum level of the electrolyte is halfway between the tops of the plates and the inside of the cell covers. (Do not include vent heights.) The level can be checked visually if the cell containers are transparent. If not, the level may be determined by inserting an electrolyte-level test tube (plastic or glass) through the vent until it rests on top of the plates. Then place a finger tightly over the exposed end, and withdraw the tube for inspection. The electrolyte must always be returned to the cell from which it was withdrawn. When the electrolyte level is low, distilled water should be added to restore the electrolyte to the proper level, but the cell should not be overfilled. If the cells are overfilled, the electrolyte will be forced out of vents during charging and will saturate trays. This causes electrolysis between the cells, corrosion of the cell containers, and troublesome grounds in the electrical circuit. Overfilling the cells will also dilute the electrolyte to such an extent that the battery's specific gravity will be reduced and cell plates will be damaged.

(2) *Electrolyte renewal.* When electrolyte is clear and colorless, it is in good condition. Electrolyte that has become contaminated with small quantities of carbon dioxide from the air will form potassium carbonate and will appear cloudy. If the solution becomes colored or cloudy, it is evident that the electrolyte is contaminated with impurities and should be changed. It may also become necessary to change the electrolyte due to overcharging or overflow, which cause the specific gravity to fall outside the manufacturer's specified range. If the specific gravity is low, continued operation will result in a rapid reduction in the life of the battery. Therefore, when the specific gravity falls below 1.170, the electrolyte should be changed. Follow the manufacturer's instruction when renewing the electrolyte. The battery warranty may not permit renewal without the manufacturer's permission.

e. Charging. Specific gravity or cell voltage readings generally cannot be used to determine the state of charge of a nickel-cadmium battery. To ensure that the battery is fully charged, it should be given a booster charge once a month, after any heavy or intermittent discharges, or after the battery charger has been out of service. Maintenance personnel should maintain a record of the monthly booster charges. The accuracy of the charger voltmeter should be checked against a recently calibrated voltmeter at least once a year. A summary of charging requirements for nickel-cadmium batteries is given in table 14-4.

f. Precautions. In addition to the precautions given for lead-acid cell batteries, prohibit the use of acid-contaminated tools and equipment, such as hydrometers and thermometers used for lead-acid cell maintenance.

Table 144. Charging of nickel-cadmium batteries

Charge	Requirements
Initial charge	1. The first charge of batteries that are delivered discharged should be carried out at constant current. 2. When the battery charger's maximum voltage setting is too low to supply constant current charging, divide the battery system into two parts to be charged individually. 3. Follow the manufacturer's instructions for setting the charging rates.
Float charge	1. Float charge voltage should be maintained at 1.43 volts to 1.45 volts per cell to avoid gassing. 2. Maintain constant voltage charging to prevent the battery from discharging at a depressed voltage level. 3. To prevent excessive water consumption, avoid charging the battery at higher values than recommended.
Booster charge	1. The booster charge should be 1.65 volts per cell. 2. A fully discharged battery in good condition can be fully charged in 4 hours. 3. If the float charge has maintained the battery in a fully charged condition during the month, the monthly booster charge will be minimal. 4. The booster charge should be continued until the charging current has leveled off for two consecutive readings one-half hour apart. 5. When applying a booster charge, it is important to watch the electrolyte temperature in the cells. If the temperature reaches 100 degrees F (43 degrees C), the charging rate should be reduced at once.

Affordable Wire Management, Exhibit No. EX1010
Case No. IPR2024-00182
Page 160 of 201

Section VI-CHECKS AND TROUBLESHOOTING

14-I 8. Inspections of batteries.

Inspections should be made under normal conditions and performed on a regularly scheduled basis. All inspections should be made under normal float conditions. Specific gravity readings are not meaningful during charge or following the addition of water. Readings should be taken in accordance with the manufacturer's instructions. Refer to the appendices of ANSI/IEEE 450 and ANSI/IEEE 1106 for more information.

a. Monthly. Provide recorded checks of the following data:

(1) Check float voltage measured at the battery terminal.

(2) Observe general appearance and cleanliness of the battery, the battery rack, and battery area.

(3) Check battery charger output current and voltage

(4) Check electrolyte levels.

(5) Check for cracks in cells or leakage of electrolyte.

(6) Check for any evidence of corrosion at terminals, connectors, or racks.

(7) Check ambient temperature and condition of ventilation equipment.

(8) Check the pilot-cell (if used) voltage, specific gravity of flooded lead-acid pilot cells, electrolyte temperature of flooded pilot cells, and terminal temperature of valve-regulated cells.

b. Quarterly. In addition to the monthly items, provide recorded checks of the following data:

(1) Check all cell voltages, specific gravities of all flooded lead-acid cells, and all terminal temperatures of valve-regulated batteries.

(2) Check total battery terminal voltage.

(3) Check 10 percent of intercell connection resistances chosen at random.

(4) Clean and provide corrosion protection of cells, terminals, and racks, and add water, as necessary, to adjust electrolyte levels.

(5) Provide an equalizing charge if cells are unbalanced.

(6) Analyze records and report any recommendations.

c. Annually. In addition to the quarterly items, provide recorded checks of the following data.

(1) Provide a detailed visual inspection of each cell.

(2) Check all bolt connections in accordance with ANSI/IEEE 450 or ANSI/IEEE 1106 to see if retorquing is required. Retorque to the manufacturer's specifications if required.

(3) Check intercell, intertier, and battery terminal connection resistances.

(4) Check integrity of the battery racks.

d. Special inspections. A special inspection should be made whenever a battery experiences an abnormal condition (such as a severe discharge or overcharge) to ensure that the battery has not been damaged. This inspection should include all the quarterly tests.

14-19. Troubleshooting batteries.

When battery system performance is questionable, all the service checks required under annual inspections will need to be made. Generally, any cell which demonstrates conditions beyond the manufacturer's recommended limits should be replaced. The system should be rechecked to ensure all suspect cells have been removed. Where widespread premature battery failures are encountered, the battery manufacturer's service department should be contacted for further instructions. Cell polarity reversal, failure to hold charge, and inability to maintain an acceptable specific gravity are conditions which mandate further investigation. When low or high float voltages, temperature variations, visual observation of deterioration or swelling, and low open-circuit voltages, all exceed the manufacturer's parameters, the cells are probably damaged beyond repair.

Section VII-BATTERY CHARGING EQUIPMENT

14-20. Battery charging requirement.

A battery cannot function without a device which maintains its properly charged condition. A well-designed battery charger should provide the correct balance between overcharging and undercharging so as not to damage a battery. Additionally, a battery charger may have features to limit or alarm when the battery discharges to the point where the cells approach exhaustion, or where the voltage falls below a useful level (usually about 80 percent of the battery's rated capacity). Overcharging, if done frequently, results in increased water use. Overdischarging tends to raise the temperature, which may cause permanent damage.

a. Current flow. Batteries are connected to the battery charger so that the two voltages oppose each other, positive of battery to positive of battery charger and negative to negative. Battery current is the result of the voltage differences between the battery and the battery charger which flows through the battery's extremely low opposing resistance. The voltage of the battery which rises during

Affordable Wire Management, Exhibit No. EX1010
Case No. IPR2024-00182
Page 161 of 201

charging starts to limit current flow. Battery chargers are designed to limit charging currents to values that keep the charging equipment within a reasonable size and cost. Battery chargers must also maintain a sufficiently high current throughout charging, so that at least 95 percent of the complete storage capacity is replaced within an acceptable time period. This recharge time is usually not more than 8 hours for station service.

b. Charging equipment. Batteries must be charged by direct-current. The available sources are an ac-to-dc rectifier and an ac-to-dc motor-generator set. The use of motor-generator sets to supply station batteries is an unusual practice now because the function is so reliably and economically handled by rectifier type battery chargers. If motor-generator sets are used, maintenance should be in accordance with the manufacturer's instructions.

14-21. Rectifier type battery chargers.

There are several types of rectifiers used for battery charging. All operate on the same principle permitting current to pass freely in one direction, while permitting little, if any, current to flow in the reverse direction. Refer to manufacturer's instructions for details of each type.

a. Silicon-controlled rectifier (SCR) type. This type uses silicon diodes to provide the rectification of ac voltage input to dc voltage output. Units may include transistor-controlled magnetic amplifiers. If not filtered, units can cause electromagnetic interference (EMI) and radio frequency interference (RFI). A properly filtered unit will eliminate this problem. However, the filter capacitor may take several minutes to discharge, even after isolation of the battery charger from the ac input and the battery. This feature should be noted by a warning label on the battery charger.

b. Controlled ferro-resonant type. This is an improved version of the simple ferro-resonant type, which was the first static battery charger developed, and which used a constant voltage transformer and selenium stacks. The simple ferro-resonant type was quieter and much easier to use than a motor-generator, but had serious control shortcomings. The controlled ferro-resonant type includes a control winding, a triac, and a control circuit to overcome these problems. It is very important for personnel to distinguish between "simple" ferro-resonant units and "controlled" ferro-resonant units to be sure that the dual-rate (float/equalize) requirement for battery charging is acceptable.

14-22. Accessories for battery chargers.

Dependent upon the specific unit, battery chargers will be provided with various accessories. The maintenance of these devices should be as recommended by the manufacturer. Included in the category of accessories are meters, equalizing control, indicating lamps, dc voltage level alarm, ground detection alarm, and electrolyte level alarm. Meters and indicating lamps should be connected to the load side of the circuit breakers on the circuit being monitored. Connections on the line side can give a false indication of power availability.

a. Equalizing control. Equalizing control should include a manual switch for transferring the lower-rate float charge to the higher-rate equalize charge. Optional accessories include equalizing timers and automatically-controlled equalizing timing for adjustable interval settings.

(b) Input and output. Input and output circuits are always provided with protection. Fuses are standard accessories. Circuit breakers are optional, but are a preferred means of isolating the battery charger for maintenance.

14-23. Maintenance of battery chargers.

Battery chargers are designed to require a minimum of maintenance. There are no rotating parts, except in the optional timer, and all components normally have an indefinite life and no aging effects. However, it is possible for a diode or rectifying stack to fail at long intervals, either by open-circuiting or short-circuiting. Failed items should be replaced in accordance with the manufacturer's instructions. Battery chargers should be kept clean, dry, and checked periodically to make sure all connections are tight. If necessary, dry air may be used to blow dust out of the interior. In the event of any irregular operation, examine and tighten, if necessary, all internal and external connections and check circuits for continuity. If the difficulty cannot be remedied, contact the manufacturer.

a. Checking. Regardless of the quality of the battery charger, its operation should be checked, at the same time as its battery is inspected, to ensure that it is functioning properly. Any radical trouble will be indicated by overheated components on either the battery charger or the battery installation, by blown fuses, or by failure to complete the charge. In such cases the trouble must be located and remedied. Certain adjustments may gradually "drift" from their normal position and require correction. At each monthly inspection provide recorded checks on the following data:

(1) Check the voltage of battery chargers in floating operation.

(2) Check the current output and/or voltage of battery chargers in cycle operation, during normal use.

Affordable Wire Management, Exhibit No. EX1010
Case No. IPR2024-00182
Page 162 of 201

(3) Check the operating temperature of equipment, (by touch)

(4) Check the operating voltage of voltage-sensitive relays.

(5) Check the operation of timers.

(6) Check that all meters are at zero calibration.

b. Potential testing. Whenever checking circuits or components, do not test with a megohmeter of any potential higher than the voltage of the equipment which is being tested. Any higher voltage may break down rectifying elements or insulation not designed to withstand it.

c. Slope characteristic. Every battery charger has a relationship between the output voltage and the output current throughout its complete range. For any given voltage, the battery charger will always deliver a given current and vice versa. This slope characteristic is inherent in the battery charger and is not affected by the size or type of battery. It simply responds to the counter-voltage of the battery.

(1) *Battery charger suitability.* The battery charger, if properly designed, will have a slope characteristic compatible with the battery it is charging.

2. *Checking of the battery charger slope.* In the event of any apparent improper operation, the battery charger slope characteristics should be checked. If actual readings of voltage and current fall on or reasonably near the slope line, the battery charger is not at fault and the trouble is elsewhere.

Section VIII-PLACING A NEW BATTERY IN SERVICE

14-24. Placing lead-acid batteries in service.

Most lead-acid batteries are manufactured as wet-charged units. However, vented (flooded) batteries can be ordered as dry-charged units, when it is desirable to store them for a considerable period before they are put in use.

a. Wet-charged batteries. Wet-charged lead-acid batteries contain fully-charged elements and are filled with electrolyte at the time of manufacture. A wet-charged battery will not maintain its charged condition during storage, and must be recharged periodically even if not used. Upon receipt of a battery, it is recommended that it be given an initial charge for a period of from 3 to 6 hours. Charge until there is no rise in the specific gravity. Use the finishing rate as indicated in the specific battery instructions or on the battery nameplate. Cell temperature during charge should not exceed 110 degrees F (43 degrees C). Should the temperature become excessive, the charging rate should be decreased.

b. Dry-charged batteries. A dry-charged battery contains fully-charged elements, but it contains no electrolyte until it is activated for service. It leaves the manufacturer in a dry state. Once activated, it is essentially the same as a wet-charged battery. At the time of manufacture, the battery elements are charged by a direct current being passed through the plates while they are immersed in an electrolyte of dilute sulfuric acid. The fully-charged plates are then removed from the electrolyte, washed in water, and completely dried. The battery is then assembled. A dry-charged battery retains its state of full charge as long as moisture is not allowed to enter the cells.

(1) *Filling.* Most manufacturers furnish a packaged electrolyte and instructions for placing the battery in service to ensure that the proper electrolyte is used and that the battery is properly charged. The furnished electrolyte will probably have a specific gravity about 10 points lower than the nominal full charge specific gravity of the battery.

(2) *Freshening charge.* It is a good practice to slow charge a freshly-activated battery. This ensures a fully-charged battery. Always charge a newly-activated battery for at least an hour. Once it has been properly prepared and installed, a dry-charged battery will have the capacity, characteristics, and the life of a similar wet-charged battery.

14-25. Placing nickel-cadmium batteries in service.

Batteries will generally be supplied “filled and discharged”, but “filled and partially charged” units can be provided. Either type should be capable of being stored for up to one year without a recharge. Vented (flooded) units can also be provided as “discharged and empty” and can be stored indefinitely. All vented batteries must be firmly fitted with vent plugs during transit. Check plugs periodically to ensure integrity of the seals. Charging during storage, charging prior to putting in service, and filling empty cells should be done in accordance with the manufacturer's instructions and using the manufacturer's electrolyte.

14-26. Connections for batteries.

Clean all points of electrical contact to be certain of good conductivity through terminal connections. If connections are copper, apply a coat of petroleum jelly (such as Vaseline) to prevent corrosion.

Affordable Wire Management, Exhibit No. EX1010
Case No. IPR2024-00182
Page 163 of 201

Section IX-PUTTING A BATTERY IN STORAGE

14-27. Battery storage procedure.

If a battery is to be temporarily taken out of service, charge it until all the cells gas; add water to vented type batteries during the charge, so that the gassing provides complete mixing to ensure against freezing. Add enough water to raise the level of the electrolyte to the full line marked on the jar, or as recommended by the manufacturer. After the charge is completed, remove all fuses to prevent use of the battery during its storage period. Make sure that all vent plugs are in place. To put the battery in service again, give it a freshening charge in accordance with the manufacturer's instructions.

14-28. Periodic check of a stored battery.

At certain periods, each stored battery should be reconnected; water should be added to vented type batteries; and the batteries should be charged. For lead-acid batteries, this should be done every 2 months in climates averaging 70 to 80 degrees F (21 to 27 degrees C); every 6 months when the average temperature is on the order of 40 degrees F (5 degrees C); and every 3 or 4 months for temperatures in between. Nickel-cadmium batteries may be stored for longer periods.

Section X-REPLACEMENT AND DISPOSAL

14-29. Replacement of a battery.

Generally, if a battery's capacity is less than 80 percent of the rated capacity, the recommended action (by industry consensus) is replacement. The urgency of the replacement will depend upon the available capacity margin, and the sizing criteria compared to normal load requirements. Whenever replacement is dictated, the maximum delay should be no more than 12 months.

a. Other replacement criteria. Significant differences in the capacities of individual cells, cell polarity reversal, failure to hold charge, and inability to maintain an acceptable specific gravity are conditions which require further investigation. Replacement of individual cells may be required in order to maintain capacity.

b. Cell replacement. Replacement cells must be compatible with the remaining battery cells and should be discharge tested before installation. As a battery installation approaches the end of its service life, it is not recommended that individual cells be replaced.

14-30. Disposal of batteries.

Unless tested and proven otherwise, batteries, because of their electrolytes, are classified as hazardous waste. Recycling is the most cost-effective and trouble-free method of disposal, and therefore is the preferred disposal method when batteries are removed from service. The Resource Conservation and Recovery Act (RCRA) governs the requirements for management and control of all wastes, hazardous or nonhazardous, and applies to the disposal of batteries. RCRA states that spent batteries must be sent to a battery manufacturer for recycling or regeneration. Other recyclers are not acceptable. Some manufacturers will accept old batteries for recycling and regeneration. Although manufacturers generally accept lead-acid batteries more willingly than nickel-cadmium batteries, a fee may be charged for regeneration. Actual disposal must meet both RCRA and local facility requirements.

Affordable Wire Management, Exhibit No. EX1010
Case No. IPR2024-00182
Page 164 of 201

CHAPTER 15

TOOLS AND EQUIPMENT

Section I-USE

15-1. Electrical tools and equipment standards.

Industry standards describe the requirements for electrical protective equipment and for tools. These standards were developed so that the tools, equipment, materials, and test methods used by electrical workers will provide protection from electrical hazards. Electrical protective equipment is included in the ASTM F 18 series specifications. Tool and equipment terminology and in-service maintenance and electrical testing are included in ANSI/IEEE 935 and IEEE 978 respectively. Safety manuals TM 5-682, NAVFAC P-1060, and AFM 32-1078 also contain tool and equipment requirements. In case of conflict, always use the most stringent safety requirement.

15-2. Tools and equipment classification.

For simplicity and convenience, the tools and equipment required for electrical inspection and maintenance are classified as follows:

a. Tools. Tools include hand tools, digging tools, hot line tools, miscellaneous and special tools, and tackle.

b. Protective equipment. Protective equipment includes rubber gloves, lie hose, matting, blankets, insulator hoods, sleeves, barricades and warning devices.

c. Climbing equipment. Climbing equipment includes body belts, safety and climber straps, climbers, and ladders.

d. Electrical inspecting and testing equipment. Electrical inspecting and testing equipment includes electrical and mechanical devices used to test the operation of electrical equipment, such as voltmeters, ammeters, ohmmeters, tachometers, and similar devices.

e. Large portable and mobile equipment. Large portable and mobile equipment includes relatively large and easily transportable equipment for use in maintenance work, such as line trucks, aerial lift trucks, motor-generator sets, pole hole diggers, and similar apparatus.

15-3. Tool and equipment safe use.

All hand and mechanically operated tools, must be used in a manner to comply with all applicable safety rules. Each worker is responsible for observing safety rules and preventing accidents.

a. Energized lines. The methods used when working on energized lines, such as gloving, use of hot line tools, provision of electrically insulated buckets, will be in accordance with the applicable services' safety manuals. Safety rules governing the use of such tools and equipment are given in these manuals and in applicable OSHA regulations, 29 CFR 1910 and 29 CFR 1926.

b. Material use. An insulating type hydraulic fluid is required in all hydraulic handtools used on or near energized lines and in insulated sections of aerial lift trucks. Hazardous material procedures must be followed when dealing with such substances.

Section II-HAZARDOUS MATERIAL PROCEDURES

15-4. Hazardous substances.

A hazard communication program should be implemented in accordance with 29 CFR 1910.1200 or 1926.59. Al1 maintenance personnel, prior to handling equipment or materials containing hazardous substances, will be advised of information in the Material Safety Data Sheet (MSDS) for that substance. A copy of the MSDS for each hazardous substance should be readily available to workers for referral to the manufacturer's instructions for use, storage, labeling, disposal, and for dealing with emergencies arising from that material's use. The major hazardous items to which electrical workers may be exposed are asbestos, polychlorinated biphenyls (PCB's), sulfur hexifluoride (SF,) and some of the chemicals used to control undesirable brush or pests or to preserve wood.

15-5. Asbestos containing materials.

Asbestos is no longer used for insulation or fire protection purposes or as a material in the fabrication of conduit or piping. Any present danger which workers may encounter will be from cutting existing asbestos materials which release asbestos fibers to

Affordable Wire Management, Exhibit No. EX1010
Case No. IPR2024-00182
Page 165 of 201

the atmosphere. If fibers are suspended in the air in significant quantities, their inhalation can damage respiratory functions. Electrical workers are normally exposed to such fibers, only if existing cement-asbestos conduits or asbestos fire-proofing are cut either accidentally or knowingly without proper precautions. Some older circuit breakers may have asbestos-containing arc chutes and should be handled carefully, using approved gloves, and wearing approved respirators. Otherwise, any handling of asbestos-containing materials should only be done by authorized trained personnel.

15-6. polychlorinated biphenyl (PCB) insulated equipment.

Items with PCB insulation, such as transformers or regulators, should have already been removed in accordance with facility directives or should at least have been identified in accordance with EPA regulations. However, PCB traces have been reported in older bushings installed on nonPCB-insulated units. In the past, PCB insulation was distributed by several equipment manufacturers under such trade names as Inerteen, Pyranol, Chlorextol, Safe-T-Kuhl, No-Flamol, etc.

15-7. Sulfur hexifluoride (SF_6) insulated equipment.

In its pure state, SF, is a colorless, odorless, tasteless, nonflammable, nontoxic, and noncorrosive gas. It is shipped in a liquid form. As it is five times heavier than air, it can act as an asphyxiant and, in the liquid state, it can cause tissue freezing similar to frost bite. Decomposition products of SF,, produced by electric arcs or faults, can be toxic. Normal arc products recombine to form SF, gas, or are removed by an absorber provided for that purpose within equipment such as circuit breakers and switches. However, gas-insulated items such as busway and cable, as well as circuit breakers and switches, can rupture and leak gas. Always treat SF, as hazardous.

15-8. Chemicals used for outside maintenance.

Herbicides, pesticides, and wood preservative treatments are designed to exterminate or control living organisms. They provide potential health hazards, if MSDS requirements for special handling and personal protective equipment are not followed. Special training may be required to meet applicable agency requirements or certification.

Section III-PROTECTIVE EQUIPMENT

15-9. Protective electrical rubber goods.

Rubber goods are used in clothing designed to provide insulation from an energized part or line. Rubber is a generic term that includes elastomers and elastomeric compounds, regardless of origin. Rubber goods are used by electrical worker when work requires handling energized lines.

a. Inspection. Rubber protective equipment must be visually inspected prior to each use and should be given electrical and mechanical tests at the frequencies stipulated in departmental publications. Unserviceable rubber goods should be plainly marked and turned in for replacement. Familiarity with the visual inspection methods and techniques listed in ASTM F 1236 is advisable.

(1) *Rubber gloves and sleeves.* Rubber gloves and sleeves should be inspected on the outside and then turned inside out for inspection on the reverse side. They must be free of defects or damage impairing electrical or mechanical properties, and must meet test requirements.

(a) Air test and inspection for rubber gloves. Rubber gloves should be tested prior to each use. Grasp the cuff at opposite points and twirl the glove, trapping air inside. Hold the end closed with one hand so that air cannot escape. Then squeeze the glove with the other hand to force air into the thumb, fingers, and palm. Listen and feel for escaping air. Inspect the entire glove surface for imbedded foreign material, cuts, deep scratches, or punctures. Gloves found to be defective should be tagged and turned in for replacement.

(b) Electrical test for rubber sleeves and gloves. Rubber gloves and sleeves in service should be given an electrical proof test periodically. If possible, the test should be accomplished by a local utility company or an independent testing laboratory, who should also provide electrical testing for all other rubber goods used. If independent testing is not possible, then test equipment and test voltage should comply with ASTM F 496, which also covers in-service care. The Lineman's and Cableman's Handbook covers the procedure and shows the complexity and expertise required for in-service testing of rubber goods.

(2) *Line hose.* The outside of line hose should be inspected for checks and cracks by bending the hose 180 degrees. at successive points along its length to stretch the rubber enough to expose possible defects. The inside of line hose is inspected by opening and spreading. Periodic electrical in-service tests should be given in accordance with ASTM F 478 which also covers in-service care.

(3) *Other equipment.* All other rubber protective equipment should be inspected for cuts, tears,

Affordable Wire Management, Exhibit No. EX1010
Case No. IPR2024-00182
Page 166 of 201

snags, or other defects that could impair safety. Rubber blankets are inspected by placing them on a flat surface, rolling each corner diagonally, and checking the outer surface as it is rolled. Insulator hoods are spread open at the bottom just enough to permit a view of the inner surface. Attempting to force the sides back to any great extent should be avoided, since this causes cracks or splits the hood. These inspections will be made, even if equipment has not been used since the last inspection. Periodic electrical testing of other rubber protective equipment should be conducted to ensure their adequacy as insulators. In-service care and testing is covered for line covers (hoods) in ASTM F 478 and for insulating blankets in ASTM F 479. There is no industry in-service care provision for matting, which is designed to meet ASTM D 178.

b. Storage. The following procedures govern storage of rubber protective equipment:

(1) *Storage of equipment in line trucks.* Store rubber protective equipment in readily accessible compartments and in an efficient manner. Gloves should be stored in individual bags and covers should be nested to conserve space. Permit no other equipment in compartments in which rubber goods are stored.

(a) Provide separate compartments for each class of equipment. Each compartment should be large enough to allow articles to lie in an unbent position.

(b) Never fold gloves and blankets.

(c) Be sure doors of compartments are tight enough to protect rubber goods against sun, rain, and dust.

(d) Rubber blankets must be protected from damaging contact with other equipment. Roll loosely and place in metal canisters. Canisters are available in sizes to accommodate from one to six blankets.

(e) If linemen's rubber coats and boots are carried in the truck, provide special compartments. If coats cannot be carried on hangers, roll them. Do not fold.

(2) *Warehouse storage.* All rubber protective materials not stored on the truck should be stored in a warehouse, in a clean, cool, dark, place having an approximately 50 percent relative humidity. Since heat, light, oil, and distortion are natural enemies of rubber, protective equipment should be guarded against these dangers as much as possible.

(a) Do not store rubber equipment near boiler rooms, steam pipes, or radiators. Protect it against exposure to direct sunlight.

(b) Rubber ages or oxidizes quickest at points held under distortion. A blanket allowed to remain folded for a period of time cracks or punctures in the crease. Never leave rubber gloves inside out because distention at fingertips and glove body connections to finger and thumb pieces hastens deterioration.

(c) Provide separate bins in the warehouse to store each class of equipment. Store gloves, coats, and hoods in original containers. Blankets and line hose should lie flat.

(d) Do not store any tools or other material in the same bins with rubber protective equipment.

(e) Give all rubber protective equipment in storage a thorough visual inspection and an electrical test before using.

15-10. Helmets for electrical work.

Protective hats shall be in accordance with the provisions of ANSI 289.1, Class B requirements (meetings a 20,000 volts ac test for 3 minutes) and shall be worn at the job-site by all workers who are exposed to potential hazards, such as falling objects, electric shock, or burns.

15-11. Barrier protection for electrical work.

Barriers are required adjacent to electrical installations for the protection of equipment and personnel. Permanent installations are normally protected by metal fences, however materials should be available for erection of suitable temporary barriers.

a. Preformed barriers. Preformed barriers are available that are portable and readily assembled. Maintenance consists essentially of rust prevention by periodic painting.

b. Temporary barriers. A temporary barrier can be constructed using hazard area warning tape in conjunction with stanchions. This type of barrier is effective only when indicating a boundary, and should be used only where the limitations imposed by such a barrier are within established safety practices. Stanchions should be periodically cleaned and painted as required.

15-12. Visual warnings for electrical work.

In addition to providing barriers, it is often necessary to install some type of visual warning. The generally used types include warning signs, flags, flares, and flashing lights. Since these are often required on an emergency basis, they should be readily available to electrical maintenance personnel. Extra batteries and bulbs or complete lights should be carried on an electric maintenance truck. Signs should be kept in readable condition, clean, and free of rust or corrosion.

15-13. Protective grounding of deenergized lines.

When work is to be done on a deenergized line, protective grounding sets must be applied to the

Affordable Wire Management, Exhibit No. EX1010
Case No. IPR2024-00182
Page 167 of 201

line. These sets consist of clamps connected together with insulated wire. A set is applied to a circuit in such a way that all conductors of the circuit may be effectively shorted together and grounded. All equipment must meet the requirements of ASTM F 855.

a. Clamps. The clamps of a grounding set are designed to be manipulated with hot-line sticks. These clamps should be visually inspected each time that they are to be used to ascertain that the wire is securely fastened and that each clamp is in sound condition. Check to see that clamps function properly and to ensure that a tight connection can be made to the conductors on which they will be used.

b. Wire. Insulated wire is used to connect the clamps together and to ground. Wires with insulation missing, cut, cracked, or otherwise in poor condition, should be replaced.

c. Safety aspects. Protective grounding is required to ensure worker safety. Follow the instructions given in your service safety manual in regard to the following grounding aspects.

(1) Where to apply grounds in relation to the work site.

(2) Size of ground wire. A minimum 2/0 AWG copper ground wire is recommended. Check ASTM F 855 for maximum fault current capabilities of grounding cables.

(3) Staying at least 10 feet (3 meters) clear of any protective grounds is recommended to avoid touch-and-step potentials. Otherwise, wear insulated footwear and provide other hazard minimizing measures.

Section IV-CLIMBING EQUIPMENT

15-14. Body belts, climber straps, and safety straps.

Personal climb equipment must meet the requirements of ASTM F 887 and OSHA Standard 1926.959. Only the best grade, smooth, pliable harness leather, or other material approved and conforming to government specifications, should be used in body belts and safety straps. Treat climber straps in the same manner as safety straps. If nylon fabric is used, as permitted by ASTM F 887, consult the manufacturer for proper cleaning procedures.

a. Cleaning and dressing. Body belts and safety straps should be cleaned and dressed every 3 months, or oftener if they become wet from rain or perspiration. If leather equipment has come in contact with paint, carefully remove the paint with a dry cloth as soon as possible. The following method is recommended for cleaning and dressing leather body belts and safety straps:

(1) Wipe off all surface dirt with a dampened (not wet) sponge.

(2) Rinse the sponge in clear water and squeeze nearly dry. Work up a creamy lather with a neutral soap (free from alkali), such as castile or white toilet soap.

(3) Wash the belt or strap thoroughly with a lathered sponge to remove imbedded dirt and perspiration. Remove any moisture by wiping dry with a cloth.

(4) Work up a lather of saddle soap in the same manner as for the neutral soap.

(5) Work the saddle soap lather well into all parts of the leather. Place the leather in a cool, nonhumid place to dry.

(6) When the leather has nearly dried, rub it vigorously with a soft cloth.

b. Oiling. Leather body belts and safety straps usually require oiling about every 6 months, or when the leather cannot be made soft and pliable with the saddle-soap dressing. The following method is recommended:

(1) Clean the leather with a neutral soap, as for cleaning and dressing.

(2) While the leather is still damp, gradually apply about 4 teaspoons (10 milliliters) of pure neatsfoot oil per set of equipment, with hands or rag, using long light strokes to work the oil into the leather. Be sure a light, even distribution is made. To avoid overoiling, never pour oil directly onto leather. Never use mineral oils or greases, such as machine oil or Vaseline. Leather should never look or feel greasy, which is an indication of excessive oil. Too much oil stretches the leather, which may then pick up damaging sand or grit.

(3) After oiling, set the belt or strap aside in a cool nonhumid place for about 24 hours to permit the leather to dry slowly. Never dry lather near a source of heat, since heat destroys leather.

(4) Rub vigorously with a soft cloth to remove excess oil.

c. *Storing.* The following precautions should be observed in storing body belts or safety straps:

(1) If the leather was insufficiently oiled when purchased, oil as previously described before placing in storage.

(2) Oil at least once every 6 months, when left for that period in storage.

(3) Never store the leather goods with sharp edged tools. Do not put belts or straps in the same compartment with climbers because of the possibility of cutting or puncturing the leather with gaffs.

(4) Never store where the leather may be subjected to excessive heat or dampness.

Affordable Wire Management, Exhibit No. EX1010
Case No. IPR2024-00182
Page 168 of 201

d. Safety inspection and tests. Body belts and safety straps should be inspected in conjunction with other regular tool inspections. If faulty conditions are found or suspected, the articles involved must be repaired or replaced at once.

(1) *Visual inspection of body belts.* Inspect body belts for the following:

(a) Edges and other parts of leather loops holding D-rings, which are crushed or worn sufficiently to reduce their strength or cause the leather to tear.

(b) Loose or broken rivets (particularly those in the loops holding the D-rings).

(c) Cracks and cuts tending to tear the leather or affect the strength of the belt.

(d) Leather which is hard and dry.

(e) A broken plier pouch.

(f) A broken or defective buckle.

(g) Any leather spot which is dry on the outside. If bending at that spot cracks the leather and small pieces between cracks may be easily removed with a fingernail, the leather has been burned.

(h) Torn or excessively enlarged holes for the buckle tongue.

(2) *Visual inspection of safety straps.* Inspect safety straps for the following:

(a) Cracks, cuts, nicks, and tears (particularly across or on the edges of the strap) that tend to affect the strength of the strap.

(b) Loose, worn, or broken rivets.

(c) Broken or badly worn steel reinforcing the strap.

(d) Leather which is hard and dry.

(e) Broken or defective snaps.

(f) Poor action of tongue on the snap. The tongue should work freely without side play and close securely under the spring tension.

(g) A broken or defective buckle.

(h) Torn holes for the tongue or buckle.

(i) Leather worn thin. If otherwise sound, the strap may be used as long as it is at least l/8 inch (3.175 millimeter) thick in any portion, other than the doubled part of the strap. In this portion, the leather may wear to a thickness slightly less than ⅛ inch (3.175 millimeter) because the doubled portion is approximately twice as strong as a single portion.

(j) Burnt leather indicated by dry spots which crack when bent.

(k) Grain (smooth side of leather) worn so fibers are plainly visible.

(3) *Bending test for leather.* Before the bending test is applied to a body belt or safety strap, the leather should contain enough oil to be soft and pliable. When the test is made, the leather should show no cracks other than slight surface cracks.

(a) Bend safety straps with the grain (smooth) side out over a %-inch (19 millimeter) mandrel. Make the test over the entire strap.

(b) Make a similar test for body belts wherever they can be bent, such as under tool loops and at tongue straps.

(c) Do not bend belts or straps sharply over too small a mandrel, as leather may develop cracks if excessive strain is put on the grain layer.

15-15. Climber gaffs.

The safety of a lineman using climbers depends largely on the use of properly sharpened gaffs of the correct length. Pole gaffs must measure at least 1.4375 inches (37 millimeters) on the underside. Tree gaffs must measure not more than 3.5 inches (89 millimeters) nor less than 2.25 inches (57 millimeters) on the underside.

a. Sharpening. Certain precautions must be observed in sharpening a gaff.

(1) To avoid the danger of removing the temper of the metal, do not sharpen a gaff with a grindstone or emery wheel.

(2) Never sharpen a gaff on the underside, except to make a shoulder, because it changes the angle to which the gaff is set and renders the gaff unsafe for use. When removing metal to make the shoulder, ensure that the underside remains straight as a rounded surface may cause the gaff to break out when climbing.

(3) Use the following procedure in sharpening a gaff:

(a) Put the climber in a vise with the gaff up.

(b) Sharpen the gaff on the two outer surfaces with a file. Take long strokes from the heel to the point of gaff. Remove only enough material to make a good point.

(c) Never sharpen a gaff to a needle point. Leave a shoulder about ⅛ inch (3.175 millimeter) back from the pint. The distance across a gaff at the shoulder should be about 5/32 inch (3.969 millimeters). This is to prevent the gaff from sinking too far into a pole.

b. Storage. Store gaffs in a manner such that other equipment will not be punctured, torn, or cut.

15-16. Ladders for electrical work.

Ladders are used frequently by electrical personnel and many accidents result from their misuse. All maintenance personnel should be familiar with the rules and regulations regarding their proper use. Portable metal ladders, or ladders with metal hardware, are prohibited from both indoor and outdoor use by personnel inspecting or working on electric lines, poles, wiring, or equipment.

Affordable Wire Management, Exhibit No. EX1010
Case No. IPR2024-00182
Page 169 of 201

a. Inspection and repair. Ladders should be inspected at frequent intervals to ensure that all rungs, braces, and side rails are secure and free of defects. If defects are noted that cannot be readily repaired, the ladder should be replaced. Ladders should not be painted, since paint will mask defects in the wood such as cracks and splits. Ladders should be kept clean, for the same reason.

b. Storage. Ladders should be stored indoors, when not in use, so harmful weathering cannot affect them. The storage area should have adequate ventilation and not be subject to excessive heat or dampness which might cause warping.

Section V-LIVE-LINE TOOLS

15-17. Certification of live-line tools.

Tools should be manufactured to meet ASTM F18 series specifications, as appropriate to the device and material. The insulating portion of a tool is made of fiberglass or wood. Facility workers should use fiberglass tools since it is stronger and does not absorb moisture; is impervious to oil-borne materials and solvents; and is a better insulator than wood. Like any insulator, fiberglass must be kept clean and dry to maintain its insulating ability. Only use live-line tools that have a manufacturer's test certification to meet the following minimum requirements.

a. Fiberglass. A fiberglass tool must have withstood 100,000 volts ac per foot (300 millimeters) of length for 5 minutes.

b. Wood. Wood tools should be phased out as soon as possible. If still in use, a wood tool must have withstood 75,000 volts ac per foot (300 millimeters) of length for 3 minutes.

15-18. Care of live-line tools.

Tools are only as safe as their continued care and inspection make them. ANSI/IEEE 516 and IEEE 978 provide additional information on maintenance and testing.

a. Records. Records will be maintained for all live-line tools and will indicate their shop or laboratory inspection and testing dates. Electrical shop and laboratory testing will be provided at intervals of not more than 6 months for tools in frequent use, and at intervals of not more than one year for tools stored for long periods of time. Arrange for tests with the manufacturer, serving utility, or local testing laboratory.

b. Tool inspection. OSHA requires that live-line tools be visually inspected daily before use. Tools to be used will be wiped clean. If any hazardous defects are indicated, tools will be removed from service. The following field observations warrant their removal from service.

(1) A tingling or fuzzy sensation when the tool is in contact with energized conductor or hardware.

(2) A mechanically overstressed tool showing such evidence as damaged, bent, worn, or cracked components; or a tool with deep cuts, scratches, nicks, gouges, dents, or delamination in the stick surface; or a tool with a deterioration of its glossy surface.

(3) An electrically overstressed tool showing evidence of electrical tracking, burn marks, or blisters caused from heat.

(4) Failure to pass an electronic test using portable electronic live-line tool testers; or failure to pass a moisture test using portable moisture meters developed to test live-line tools.

c. Tool cleaning. Clean live-line tools before each use with a clean absorbent paper towel or cloth and then wipe with a silicone-treated cloth. Waxing is not necessary after every use, but only as needed. Use cleaning and waxing kits manufactured for live-line tools and follow directions for their use. Never use cloths that have been washed in harsh solvents, soap, or detergents. Residues left on the tools will be conductive. Abrasives can destroy the surface gloss of the tool and cause water or moisture beads to form on the surface of the tool.

(1) *Fiberglass tools.* Clean, wax, and refinish in accordance with the manufacturer's directions.

(2) *Wood tools.* Replace with fiberglass tools as soon as possible. Wood tools with an excessive moisture meter reading should be treated with a moisture-resistant insulating wood preservative in the following manner:

(a) Preparation. Tools should be cleaned, dried, and smoothed with sandpaper. Emery cloth or other materials that might leave metallic particles must not be used for sanding.

(b) Drying. Use a drying cabinet, which permits tools to be suspended vertically and has small openings in the bottom and top for air circulation. Incandescent lamps may be used in the bottom to provide heat. Drying is recommended at 90 degrees F (32 degrees C) for approximately 48 hours at 31 to 38 percent relative humidity. After drying, subject tools to a high-potential dielectric leakage or ac dielectric loss test.

(c) Prompt touch up. After drying, if the finish is worn or damaged, promptly apply two or three coats of clear preservative finish as recommended by the tool manufacturer. Tools should then be dried again in a drying cabinet for an additional 12 hours.

Affordable Wire Management, Exhibit No. EX1010
Case No. IPR2024-00182
Page 170 of 201

d. Handling and storage. Workers share responsibility with their foreman and supervisor for the continued safe condition of live-line tools.

(1) *Handling.* Keep tools dry and free from dirt. Before storing, thoroughly dry all tools that have been subjected to dampness. Protect tools transported in trucks to prevent formation of scars and abrasions. Use waterproof canvas bags, or compartments with padded hooks or bins built into the truck. Place tools not in use in their proper container, compartment, or rack. Never lay tools on the ground.

(2) *Storage.* All tools not being transported will be stored in a dry, warm location and will not be tampered with or handled by unauthorized personnel. Wood tools require special care as temperature changes can cause warping. Store tools in bins and racks away from dirt, moisture, and ultraviolet rays. Inspect tools, at least once a month, if they have not been in use.

15-19. Repair of live-line tools.

Major repairs to live-line tools, such as repairing split poles, damaged parts, and parts out of alignment, should be done by the manufacturer if the facility does not have competent and trained personnel. Generally, if there is no roughness on the surface of a live-line tool and it meets electronic and moisture tests, there is no need for repair. Small surface ruptures and small voids beneath the surface may need repair. Electrical tests, such as high-potential or dielectric-loss tests, should follow any such repairs. Tests should be performed either by qualified personnel either under contract, or by facility workers who are familiar with the test requirements of IEEE 978. Never repair damaged sticks with nails or friction tape.

Section VI-HAND TOOLS

15-20. Hand tool safety.

The following minimum safe practices have been abstracted from facility safety manuals. These include the general tool safety requirements which, when ignored, most frequently lead to accidents; and the specific practices required to prevent electrical shock hazards.

15-21. General requirements for hand tools.

The following tool removal safe practices and dos and don'ts should be observed in the use of hand tools:

a. Removal. Remove damaged tools and replace them with new ones. Replace cracked or splintered handles or grips.

b. Dos. Use hand lines and canvas tool bags, or other suitable containers, to raise or lower tools to or from the working position. Dress cold chisels and center punches, as required, to prevent dangerous mushrooming.

c. Don'ts. Do not raise or lower rubber protective equipment in the same bag with tools and materials. Do not use screw drivers with metal shanks extending through the handles, while performing electrical work. Do not use measuring tapes or measuring ropes, which are metal or contain conductive strands, while working on or near energized parts.

15-22. Power tool electric shock hazard avoidance.

The following safe practices should be followed for power tools.

a. Electrically-powered tools. All portable electric handtools shall:

(1) Be equipped with three-wire cord having the ground wire permanently connected to the tool frame and a means for grounding the other end: or

(2) Be connected to the power supply by means of an isolating transformer, or other isolated power supply: or

(3) Be of the double-insulated type and permanently labeled as "Double Insulated." (The use of double-insulated tools should comply with departmental policy.)

b. Hydraulically-powered tools. All hydraulic tools which are used on or around energized lines or equipment shall use nonconducting hoses having adequate strength for the normal operating pressures.

c. Pneumatically-powered tools. All pneumatic tools which are used on or around energized lines or equipment shall:

(1) Have nonconducting hoses with adequate strength for the normal operating pressures, and

(2) Have an accumulator on the compressor to collect moisture.

Affordable Wire Management, Exhibit No. EX1010
Case No. IPR2024-00182
Page 171 of 201

15-23. Care of rope.

Rope is an essential tool in construction and maintenance work. For maximum use and safety, the following dos and don'ts should be observed in the care and handling of rope.

a. Dos. Examine strands frequently for breaks and internal wear. When ropes are not in use, coil and hang them up. Use synthetic rope wherever possible.

b. Don'ts. Comply with the following requirements:

(1) Do not allow rope to kink, because fibers become overstressed at point of bend.

(2) Do not drag rope on the ground, because dirt and sand chafe the fibers.

(3) Do not use rope that is too small.

(4) Do not thread rope on sheaves having rusted or rough surfaces.

(5) Do not allow rope to unlay; whip the ends.

(6) Do not let rope come in contact with oil. This rapidly deteriorates fibers.

(7) When rope becomes wet, dry it at the first opportunity. Avoid using a wet rope near energized lines. Remember that a wet rope is not as strong as a dry one and breaks easily if frozen.

(8) Do not use tape, string, or marlin to repair defects in rope. When defective, turn in rope for replacement.

(9) Do not use natural fiber ropes.

15-24. Splicing rope.

All ropes used in construction work should have finished ends. The types most used are the backlash and whipped ends shown in figure 15-1, and the finishing of an eye splice as shown in figure 15-2. Splicing of rope is often required in maintenance work and is commonly done in one of the following ways:

a. Eye splice. When a permanent eye is desired at the end of a rope for ring fastening or for splicing around a block or thimble, an eye splice is used. The procedure for making an eye splice (shown pictorially in figure 15-2) is as follows:

(1) Unlay end of rope about six turns.

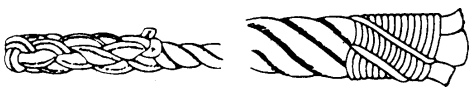

Figure 15-1. Methods of finishing rope ends

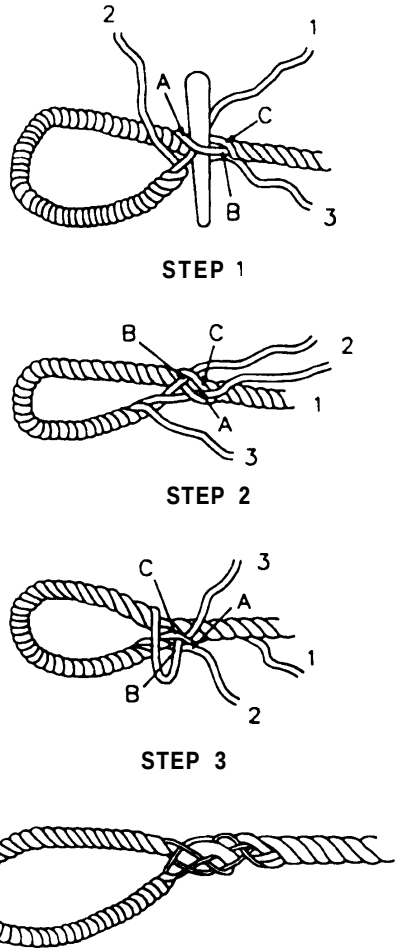

Figure 15-2. Making an eye splice

(2) Raise one strand of rope with a marlin spike at a point where the splice is to be made. The larger the eye, the farther down the rope the splice must be made.

(3) Tuck any one of the loose strands through opening diagonally upward to right. Call this strand 1.

(4) Tuck strand 2 under strand B of the main rope.

(5) Tuck strand 3 under strand C of the main rope in the same direction as the other two strands. To do this, turn the splice away.

(6) Pull strands in tightly.

(7) Pass each loose strand over the strand of the main rope nearest to it and under the one beyond. Always tuck strands in rotation, one tuck at a time. Continue for at least three tucks.

Affordable Wire Management, Exhibit No. EX1010
Case No. IPR2024-00182
Page 172 of 201

(8) If a tapered splice is desired, cut away some fibers in the strand after each tuck is made.

b. Short splice. This splice can be made quickly and is nearly as strong as the rope. Since the diameter of the rope is nearly doubled, this type of splice is too bulky to pass through a sheave block. Procedure for a short splice (shown in figure 15-3) is as follows:

(1) Unlay ends of two ropes for about six turns.

(2) Make one tuck with each set of loose strands at least three times to ensure maximum strength.

(3) If a taper is wanted, add one or two extra tucks at each end and cut away one-half of the fibers of each strand, for each tuck.

c. Long splice. When two ropes are to be spliced so that they will pass through the same size blocks as the unspliced rope, the long splice must be used. The procedure for long splice (shown in figure 15-4) is as follows:

(1) Unlay one strand of each rope for 10 or 12 turns.

(2) Lock and draw ends of ropes tightly together.

(3) Using care to see that the ends of rope do not separate, unlay strand A from the rope and follow it with strand B.

(4) Keep strand B tight and pull it down firmly into strand A's place.

(5) Continue until about 7 inches (175 millimeters) of strand B remains as shown.

(6) Untwist strands C, D, E, and F and lock them; strand C between strands D and F; strand F between strands C and E.

(7) Unlay strand D toward the left and lay strand C in its place. Strand C replaces strand D to the left, just as strand B replaced strand A to the right. Be sure that strand D is unlaid, not strand F. Replacement of strand D by strand C continues until strand C is about 7 inches (175 millimeters) long. At this point the breaks in the strands are separated by about 9 inches (230 millimeters).

(8) See that the break between strands E and F is in middle of splice; that the break between

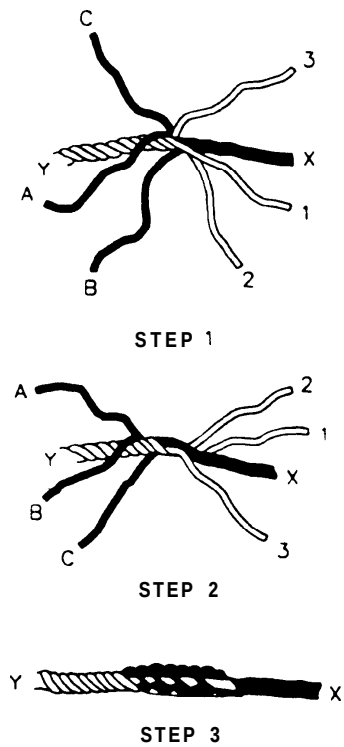

Figure 15-3. Making a short splice

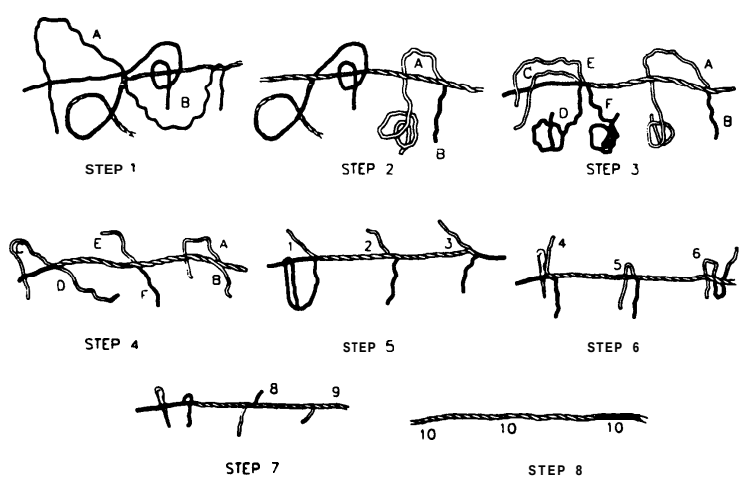

Figure 15-4. Making a long splice

Affordable Wire Management, Exhibit No. EX1010
Case No. IPR2024-00182
Page 173 of 201

strands A and B is at the right; and that the break between strands C and D is at the left.

(9) Tuck the strands at each break by cutting strands at least 7 inches (175 millimeters) long. To begin the tucking operation, tie each pair of strands together with the first half of a square knot to prevent unwinding of strands from the rope. Pull each knot down into the rope as sketched. Tuck in each strand twice, as in making the short splice.

(10) Untwist each strand a little before it is tucked to get a smoother job, because a loose strand flattens out and conforms to an oblong opening, reducing the diameter of the rope.

(11) To taper the splice, make two extra tucks and cut away some fibers from each strand after each extra tuck.

(12) After the splice has been completed, ends should be cut ½ inch (13 millimeters) long.

(13) Use a round stick to pound down each part of the splice and roll the splice underfoot to make it compact and pliant.

Section VIII-LARGE PORTABLE AND MOBILE EQUIPMENT

15-25. large portable and mobile equipment covered.

In addition to hand tools and protective, climbing, and testing equipment, large portable and mobile equipment is often required to perform maintenance work. Such equipment includes pole hole diggers, floodlights, portable/mobile substations, and aerial lifts.

15-26. large portable and mobile equipment maintenance.

The following maintenance instructions are necessarily general in nature. Applicable manufacturers' maintenance instructions should be followed.

a. Pole hole diggers. A digger is mounted on a truck or tractor and consists primarily of an engine-driven mechanism for imparting a rotary motion to a hole-digging auger. Maintenance of such apparatus is similar to automotive maintenance in terms of keeping gears, brake, clutch, and engine properly adjusted and lubricated.

b. Floodlights and spotlights. Chapter 6 gives procedures for maintaining outdoor lighting fixtures.

c. Portable / mobile substations. Portable and mobile substations, used primarily for continuity of service during maintenance and emergencies, are maintained in accordance with the general procedures of chapter 3.

d. Aerial lifts. OSHA requires that aerial lifts must conform to ANSI/SIA A92.2.

(1) *Electrical testing.* Since the working environment of an aerial device can be detrimental to the insulation characteristics of the boom and basket, electrical testing of these items is necessary at frequent intervals. The basic dielectric elements are: upper boom; basket liner and basket; lower boom insulator; and hydraulic lines and fluid, and leveling insulators. The different levels of periodic electrical test values and methods should conform to ANSI/SIA A92.2. For the Air Force, provide dielectric testing in accordance with AFTO 36C-1-4.

(2) *Boom cleaning.* If high leakage currents are revealed during periodic high-voltage testing, the boom should be thoroughly cleaned both inside and outside and provided with silicone replacement in accordance with the manufacturer's recommendations. Materials used in cleaning and coating must be approved by the equipment manufacturer. The boom should then be retested.

(3) *Mechanical and other tests and inspections.* These should be applied to the aerial device over its life to ensure continuing OSHA conformance.

(a) Visually inspect welds. Use liquid-penetrant and magnetic-particle testing to detect workmanship defects, or defects where overstressing or fatigue is suspected. Doubtful welds should also be x-rayed.

(b) Visually inspect fiberglass for structural and surface damage. Use strain-gage testers, dye and light-penetrant testing, or X-ray testing as appropriate to suspected damage.

(c) Provide hydraulic pressure-testing and setting to avoid pressures that might compromise the hydraulic component's burst safety factor.

(d) Visually inspect the ball-bearing turntable, pivot pins and bearings, drive gears, wear pads, and other power components for wear. Compare with original-equipment specifications to determine which components should be replaced to maintain the safe operation of the equipment.

(e) Provide vehicle safety tests on brakes, traveling lights, headlights, seat belts, and other vehicle components.

(f) Test special live-line tools used in the basket, including tests to determine they meet their electrical insulation and mechanical and hydraulic requirements.

Affordable Wire Management, Exhibit No. EX1010
Case No. IPR2024-00182
Page 174 of 201

Section IX-ELECTRICAL INSPECTING AND TESTING EQUIPMENT

15-27. Minimum facility field test equipment requirements.

Competent inspection is the first requirement for satisfactory maintenance of electric apparatus. The number and types of testing/inspection devices needed will depend on local needs. A suggested minimum list is given in table 15-1.

15-28. Maintenance of test equipment.

When available, the manufacturer's instructions for the care and maintenance of a test equipment should be followed.

a. Electrical instruments. The maintenance and care of electrical instrument test equipment are discussed in chapter 12, sections II and V.

b. Mechanical instruments. Mechanical instruments should be maintained and cared for with the same level of attention given to electrical instruments. In most cases, mechanical instruments are not as delicate as electrical instruments, and will primarily require mechanical adjustment, cleaning, oiling, and proper storage.

Table 15-l. Suggested list of minimum facility-wide field test equipment

Test equipment	Description
Automatic insulation tester.	Automatically performs insulation test routines in minutes, with high accuracy and sensitivity. Easy to operate, rugged and durable, the unit can be used on equipment or networks rated from low voltage to 400 kilovolts. The unit controls the dc voltage across the conductors and measures the leakage current through and over the insulation with one microprocessor and directs the display, control panel, and power supply via a second microprocessor. They communicate through a fiber-optic link. The unit combines basic and automatic insulation testing capabilities. Typical tests include: • Insulation resistance tests at 500, 1,000, 2,500, and 5,000 volts dc (with resistance readings up to 500,000 megohms at 5,000 volts dc). • Automatic polarization index (PI) tests at any of the voltages listed above. • Automatic step voltage (SV) tests in five equal steps up to 2,500 or 5,000 volts dc. The unit is powered by an internal rechargeable, sealed lead-acid battery (12 volt, 6.5 amperehour) or power supply cord (110/120 volts at 50/60 hertz or 2201240 volts at 50/60 hertz). Included Accessories: Power supply cord (1) High-voltage test leads-high, low, and guard terminal, 9 feet (3 meters) long Instruction manual (1) Optional Accessories: High-voltage test leads-high, low, and guard terminal, 30 feet (10 meters) long How to operate manual (1)
Channel disturbance waveform analyzer	Captures, displays, analyzes, and records power line disturbances. Digital sampling techniques have 512 kilobytes of nonvolatile random access memory. Waveforms are viewed on the built-in cathode ray tube display and stored on the dual 3.5-inch (90 millimeter) disk drives. Standard summary reports or custom reports are created using the attached keyboard. A built-in thermal graphics printer provides high-quality output of waveforms and reports. Four two-wire ac input channels are provided with selectable ranges of 0 to 60 volts and 60 to 600 volts. Frequency range is 45 hertz to 65 hertz. Impulses of greater than one microsecond can be recorded and the range is 25 to 6,000 volts peak.
Dielectric test set	Measures leakage current while applying a dc voltage at or above the insulation system's operating level. This measurement aids in determining the insulation system's ability to withstand overvoltages such as lightning strikes and switching surges. Unit is compact and portable, air-insulated, uses no oil, and has a plus or minus 2 percent accuracy. Unit measures current as low as 0.1 microamperes and has a continuously variable test voltage with zero-start safety interlock. Unit provides fast charging of high-capacitance samples. Includes a current guard circuit for highly accurate measurements. An optional strip chart recorder for hard copies is available.
Digital ground. resistance tester	Complete with separate measuring and charging modules. A Kelvin-type, four-wire measurement eliminates errors caused by lead and contact resistances Digital readout with automatic zero. Range: 0 to 6 ohms in 5 ranges. Resolution: 1.0 microhms. Includes a 7-foot (2 meter) helical lead set.

Affordable Wire Management, Exhibit No. EX1010
Case No. IPR2024-00182
Page 175 of 201

Table 15-1. Suggested list of minimum facility-wide field test equipment (continued)

Test equipment	Description
Infrared imager	Provides an infrared thermal measuring and imaging system with thermoelectric cooling. Temperature measurement range: 20 to 2,700 degrees F (minus 7 to 1,480 degrees C). Color images can be displayed using standard video equipment. Has a 3.5inch (90-millimeter) floppy disk drive and includes two battery packs and battery chargers, a 20 by 20 inch (500 by 500 millimeter) lens, a shoulder strap, and a high-temperature flame filter.
Null balance earth tester	Megohmeter earth tester. Hand-cranked device for measuring resistance to earth ground connections. Null balance principle eliminates probe resistance from measurements. Four ranges from 0.01 to 9,990 ohms with digital readout. Self-contained and portable.
True rms clamp-on. digital power meter	Provides true rms measurements for ac voltage and current to a crest factor of 3 (frequency wave form distortions less than 2.5 hertz). Measures ac and dc current to 1,000 amperes at frequencies to 2,000 hertz. Has a 3½ digit liquid crystal display (LCD) with 1.77 inch (45 millimeter) conductor jaw. Provides autoranging measurements, data hold and peak hold, zero adjust, and a millivolt recorder output of current input, low battery indication, a continuity check, a sampling time of 0.4 seconds and is complete with carrying case, test leads, alligator clips, wrist strap, and a 9-volt battery.

CHAPTER 16

ELECTRICAL SERVICE INTERFERENCE

Section I-DISTURBANCE PRODUCERS

16-1. Electrical power quality.

Electrical end-users are experiencing increased problems from the expanding use of disturbance-producing electrical equipment. Most equipment served by electrical facility exterior distribution lines can tolerate short-term voltage and current variations without operational problems. The concerns discussed in this chapter are voltage and current sources which produce excessive and/or continuous electrical noise, resulting in unacceptable electric power quality. These sources may interfere with adjacent communications equipment or generate damaging waveforms, which flow back into the electrical distribution system and extend the interference.

16-2. Electromagnetic interference (EMI).

EMI occurs when undesirable electrical signals from an emitting source are transferred, by radiated or conducting media, to a receptor or receiver element. These unwanted electrical signals with their undesirable effects are known as electrical noise (designated simply as noise hereafter). EM1 includes radio interference (RI) which, as defined by the Federal Communications Commission (FCC), includes only 10 kilohertz to 300 gigahertz disturbances. The first evidence of this type of interference will usually show up as impaired radio or television set reception.

16-3. Harmonic interference.

Harmonic interference is produced by nonlinear loads which draw current discontinuously, or whose impedance varies with the applied voltage.

a. Sources. Gaseous discharge lamps and solid-state equipment, such as variable frequency drives and computers, are harmonic interference sources. The accelerated use of solid-state devices has multiplied harmonic input sources operating on residential, commercial, and industrial electrical systems.

b. Occurrence. Harmonics can be differentiated from transients, since harmonics occur as a periodic wave which contains multiples of the fundamental 60-hertz frequency and transients occur as a temporary variable of the fundamental frequency only. Harmonics have always occurred in power systems but increased use of high-level harmonic-producing equipment has made harmonic interference control a matter of general concern to both electrical power distributors and users.

Section II-ELECTROMAGNETIC INTERFERENCE

16-4. Electrical distribution system interference.

Electromagnetic interference on a power system is an avoidable problem. Such interference indicates potential line trouble, which may sooner or later cause an outage on the circuit. Distribution apparatus and devices have design features which minimize electromagnetic interference. Interferences occurring on distribution systems result from poor quality workmanship or maintenance. Loose connections, inadequate grounding and bonding, and even the location of staples securing the ground wire to the pole are possible sources of EMI. Defective or improperly adjusted apparatus can add to the trouble. Do not wait until a complaint comes in before taking action. Be alert to the problems associated with electromagnetic interference, so that noise developing on the system can be detected and eliminated during regular system surveillance. Additional information on this subject can be found in NAVFAC MO-202.

16-5. Electrical noise origin.

Noise generated by EMI originates from two sources: electric distribution power lines and premises wiring (residential, commercial, or industrial). Noise is caused by defective installations of premises utilization equipment and wiring or by faulty construction of the exterior electric distribution system.

a. Utilization equipment noise. Utilization equipment noise can easily be isolated in a building by disconnecting suspected equipment, item by item, and listening for changes in the noise. These noises generally result from conducted interference and will affect consumers connected to a common transformer, but do not spread over the system for any great distance.

b. Noise originating on electric power lines. Electric power line noise can be attributed to three main causes. The first is defective insulation in some apparatus part; the second is loose primary or secondary connections; and the third is electrostatic leak-

Affordable Wire Management, Exhibit No. EX1010
Case No. IPR2024-00182
Page 177 of 201

age between ungrounded hardware and pole assembly grounded parts. Of these three causes, the third is the most common and the most difficult to locate and will be treated in the most detail.

(1) To locate noise from the first two causes, items of line equipment should be examined for the following defects:

(a) Loose hot-line clamps.

(b) Corroded fuse ferrules in cutout boxes.

(c) Defective surge arresters (particularly the gapped valve type).

(d) Defective insulators and transformer bushings.

(e) Defects in the internal insulation of a transformer.

(f) Loose connections in a neutral circuit.

(g) Loose ties on insulators and neutral brackets.

(h) Covered tie wire used on a bare conductor.

(i) Loose pole-line hardware.

(j) Insufficient spacing between grounded and ungrounded parts of pole assembly. Spacing should be 2 inches (51 millimeters) minimum for 7.2 kilovolts and 8 inches (204 millimeters) minimum for 14.4 kilovolts.

(2) Noise from electrostatic leakage is most commonly found on a multigrounded neutral type of circuit and is the most difficult to trace. Noise which originates on the primary, due to leaky insulators and the like, generally dies out within a few spans and is easily found. Noise which arises from electrostatic leakage and gets into the neutral circuit may, under some conditions, be detectable for 10 miles (16 kilometers) on each side of the source. This noise is caused by arcing due to insufficient spacing between some item of ungrounded hardware, within the electrostatic field of the primary conductors, and some part of the grounded pole assembly.

(3) It is important to recognize that any piece of pole-line hardware, which is near an energized conductor, may pick up enough electrostatic charge to spill over a small gap. Cases of interference have been traced to long lengths of barbed wire fencing running for some distance under a power line before discharging to ground. In one case the entire fence acted as an antenna and transferred the noise back into the primary. This noise was detectable for 5 miles (8 kilometers) from the source on an automobile receiver. For construction in progress, conductors should be tied in on insulators and all wires should be grounded to the system neutral at several points to prevent possible interference and also to serve as a safety precaution. This precaution also applies to telephone system construction which has not reached the stage where drainage coils have been installed. Ungrounded conductors on construction in progress, as well as ungrounded hardware on the pole assembly, should be treated with the same care and precautions as energized conductors. The minimum spacing (given earlier) should be maintained between all ungrounded pole assemblies.

(4) One type of leakage noise, which is common and puzzling, comes from staples on the pole ground. In some cases staples are driven too near the crossarm through bolt. If the gap is small enough between the staple points and the through bolt, a leakage discharge occurs. Capacitance between the through bolt and the phase wire, and its associated tie wires, develops an electrostatic charge during each half cycle of the supply frequency to produce a square wave with 120-hertz frequency. The electrical interference from this wave is generally most noticeable at radio frequencies near 800-kilohertz, although harmonics present from the 120-hertz square wave shape can cause interference up to the l00-megahertz region of the radio frequency spectrum. Line attenuation generally reduces the higher megahertz frequency harmonics, so that they do not spread as far as harmonics in the broadcast band. Taps tune the noise signal, so that some noise frequencies are damped out while others are accentuated. The discharge gap length influences the striking voltage of the arc and the width of the square wave, which is related to the fundamental frequency of the noise signal. If the noise wave is examined on an oscilloscope, it appears as a small spike on the tip of each half cycle of the 60-hertz power wave.

(a) Leakage noise occurs in a similar manner when ungrounded crossarm braces are too close to ground wire or grounded guys, and when neutral ground wires are too close to phase-wire pins on crossarms. Fuse-cutout brackets'and surge-arrester brackets generate leakage noise if they are too close to grounded pole members. Weatherproof wire used for the pole ground lead may cause trouble if the staples break the insulation but do not make solid contact with the copper ground wire conductor.

(b) In older construction, where a neutral conductor is carried on a metal bracket instead of on an insulator, EM1 may be created and be difficult to locate. A loose tie on one of these brackets, even though the bracket and its bolt are not grounded at the pole in question, causes the development of a noise signal which will travel over three or four spans. A multiplicity of these noise signals can blanket a wide area. Tightening these ties eliminates the noise for a short period until conductor vibration loosens the ties again. The permanent cure for this type of noise is changing insulators brackets to

Affordable Wire Management, Exhibit No. EX1010
Case No. IPR2024-00182
Page 178 of 201

those used in more modern brackets, and the use of a copper jumper with appropriate connectors for the connection to the pole ground.

(c) All connections to the neutral or to the pole ground should be made with jumper wires and connectors. This also applies to static wires used on transmission circuits. A pole ground wire placed under galvanized hardware is unsatisfactory as a ground and should not be used.

16-6. Electrical interference during bad weather conditions.

Leaky insulators generate greater EM1 when it rains as the assembly is grounded by water on and in the pole. Rain can cause other leakage noises to disappear, since the resistance of the water over the pole surface may be low enough to drain off electrostatic charges before discharge gaps can develop. In most cases, wind increases the interference level, but in a very irregular pattern. Above 50 megahertz (television frequency) noise emitted is usually very small during fair weather conditions, but will increase in bad weather.

16-7. Methods of electrical interference location.

Although there are many very good instruments available, no device has yet been invented which will unerringly locate and identify the source of EMI. The most successful method appears to be narrowing the search area and isolating suspected apparatus. Success in locating EMI depends on the acquired skill of the operator to interpret instrument readings and to recognize possible sources of noise by characteristic sounds.

a. Sound characteristics. The intermittent noise from loose connections is most apparent on windy days, as is noise caused by tree contact with primary conductors. Electric fences have a regular popping sound, whose frequency is governed by the timing apparatus built into the electrified fence controller. Insulators and bushings generally produce a heavy, rasping buzz, while staple and hardware noise is higher pitched.

b. Instruments. Utilize a receiver (interference locator) and/or meter that measure field-strength in the audio and radio frequency range. Some interference is easily found by driving along the road with the receiver volume turned up and the receiver tuned to a position near 800 kilohertz but free of any local broadcast stations. The offending pole is easily picked out and can be examined for sources of interference (unless standing waves are present). A useful implement for the detection of loose connections is a heavy hammer for striking a suspected pole. If the receiver noise changes with the blow, the pole should be examined in detail. A slight delay between the blow and the change in receiver noise indicates that the problem is in adjacent structures.

(1) Locating problem poles is more involved when standing waves are present. A series of occurring maximums and minimums in signal strength (as the truck is driven along the line) indicates standing waves. Maximum peaks will occur at intervals of 400 to 500 feet (120 to 150 meters) for 800 kilohertz and at closer intervals for higher frequencies.

(2) When comparing the strength of signal peaks, the operator should consider the distance between the receive antenna and the electric line. Signal increases due to overhead guy wires, services, and taps should be disregarded. Comparison of signal peaks can be made more easily if the noise is tuned to the FM frequencies on the broadcast band as the signal strength increases. Since FM broadcast signals die out faster than AM broadcast signals along the electric line, this technique narrows the search area considerably. When the "hot zone" is located, taps should be momentarily disconnected while the operator listens for changes in the signal. If the noise stops, the tap should be reconnected and search should be continued from the tap. A decrease in the noise upon disconnect may mean that the transmission characteristics of the line have been affected by the removal of the tap, thereby altering the level of the signal. The noise, however, is not originating from the tap. After tap isolation has been effected, and the noise continues, each pole in the noise zone should be struck with a hammer and subjected to visual inspection. A hammer blow will not affect staple noise and some other types of interference. It will, however, show up poor connections.

16-8. Instrument requirements for checking electrical interference.

A receiver suitable for power systems should have sufficient sensitivity to detect a signal that would interfere with an automobile radio or a sensitive home receiver. It should be selective enough to isolate the noise in the broadcast band without interference from broadcast signals. It should be capable of tuning over the broadcast band in order to identify signals which are causing radio disturbances in the area. Another necessary instrument feature is the inclusion of short-wave reception up to 20 or 30 megahertz, for noise tracing at the higher frequencies as previously described. The receiver should incorporate a meter in the audio circuit to give the relative levels of noise signals. If the instrument is to be used in a truck for patrolling the line, it should be shielded so as not to pick up vehicle-

Affordable Wire Management, Exhibit No. EX1010
Case No. IPR2024-00182
Page 179 of 201

generated noise such as ignition interference and tire static and it should be rugged enough to withstand the vibration of the truck. The receiver's loudspeaker must be powerful enough to produce a signal which can be clearly heard above any cab noise.

a. *Self-contained portable equipment.* A portable receiver must be used on a section of an electric line which is inaccessible to the patrol vehicle. The unit should still be tunable over a wide range of frequencies and should contain its own power supply. A portable instrument is also useful in tracing noise on secondary circuits and in facility buildings where noise may originate.

b. Useful accessory. A small neon lamp, taped to the end of a hot stick, is a useful accessory to probe for defective insulators and bushings. Use a NE 30 or 32 lamp with the base and resistor removed. The short wires coming out of the glass bulb should be extended in a manner similar to a television set's dipole antenna rod. Each wire should be about 0.75 inch (19 millimeters) in length. The lamp will glow within 3 to 4 feet (0.9 to 1.2 meters) of a defective insulator or bushing, depending on the severity of the interference signal. A good insulator will show no indication at from 6 to 8 inches (153 to 240 millimeters). These distances will vary with line voltage as well as with the individual lamp used.

16-9. Communication interference from electrical lines.

Loose or corroded insulators and conductor or tap connections are the major abnormal conditions occurring in power systems that cause disturbances on communication circuits. These insulator or connection conditions cause high-voltage series type power arcs on primary feeders. Series-type power arcs generate a magnetic field which may fluctuate over many miles of circuit. The inductive coupling between this field and parallel communication circuits results in noise in the communication circuits. Power-arc noise on telephone lines can usually be recognized and located by communication workers trained in this type of work.

Section III-HARMONIC INTERFERENCE

16-10. Harmonic causing devices and their effects.

Harmonic interference results when excessive nonlinear loads are connected to an electrical system.

a. Use. Nonlinear load producing devices used on electric power systems include static power converters, arc discharge devices, saturated magnetic devices and, to a lesser degree, rotating machines. Static electric power converters which convert ac to dc, dc to dc, dc to ac, and ac to ac, are the largest producers of nonlinear loads. Static power converters found on military installations are generally adjustable speed drives, uninterruptible power supplies, or computer work stations.

b. Effects. The characteristics of nonlinear loads, however, change the sinusoidal nature of the ac power current (and consequently the ac voltage drop), resulting in the flow of harmonic current into the ac power system. This current can damage capacitor banks, motors, transformers, and loadbreak devices. Protective relays may malfunction; fuses may blow erroneously; and inductive interference may develop in communications circuits. Harmonics can significantly increase power losses in distribution circuits, causing a major increase in unaccounted-for energy and operating costs.

16-11. Electric power quality responsibilities.

The facility electrical supervisor (that is the Army Director of Public Works, Navy Public Works Officer, or Air Force Base Engineer) is responsible for electrical power quality, as a part of facilities operation and maintenance responsibilities. This responsibility includes the facility electrical power distribution systems and required actions to ensure these systems will supply the standard voltage ranges given in ANSI C84.1. The electrical supervisor is not responsible for the successful and reliable operation of "high tech" electronic equipment, except in accordance with ANSI C84.1. However, to ensure overall proper operation of electrical systems, recommended harmonic distortion limits for voltages should not be exceeded. Limits are for individual harmonic distortion and for total harmonic distortion (THD). THD is defined by equation. The permitted harmonic distortion limits are given in table 16-1. These limits are the permissible maximum harmonic distortion limits for service voltage at the point of common coupling (PCC) with the user or at the building service point.

$$THD = \left[\frac{\text{(Sum of the squares of the rms magnitudes of all harmonics)}^{1/2}}{\text{(Square of the rms magnitude of the fundamental)}} \right] \times 100\% \qquad \text{(eq. 16-1)}$$

16-12. Electric power quality data.

From time to time, harmonic measurements should be taken at selected points, where a high level of harmonic distortion is suspected. Measurements indicate the system behavior, and whether harmonics levels are within the limits given in table 16-1.

a. Measurements. Instrument response requirements are covered in IEEE 519. The basic equipment used for harmonic analysis includes:

Affordable Wire Management, Exhibit No. EX1010
Case No. IPR2024-00182
Page 180 of 201

Table 16-1. Harmonic distortion limits[1]

Bus voltage at PCC	Individual harmonic distortion (%)	Total harmonic distortion THD (%)
69 kV and below..	3.0..	5.0
Above 69 kV thru 161 kV	1.5..	2.5
161 kV and above.. . . .	1.0..	1.5

[1]Copyright © 1993 IEEE. Al1 rights reserved.

(1) Oscilloscopes
(2) Spectrum analyzers
(3) Harmonic or wave analyzers
(4) Distortion analyzers
(5) Digital harmonic measuring equipment

b. Control of power quality. Maintenance personnel are not responsible for controlling power quality beyond determining, by measurements, whether the harmonic distortion of the PCC voltage exceeds table 16-1. Verify that panelboard loads are balanced, where applicable, and check wiring and grounds. A majority of power quality problems result from loose connections and improper grounding techniques, and unbalanced loads. If correcting these deficiencies does not alleviate excessive harmonics, then harmonic mitigation measures must be developed utilizing engineering solutions beyond the scope of this manual.

16-13. Electrical distribution system interference.

AIthough harmonic mitigation is not the responsibility of the electrical supervisor, it is the supervisor's responsibility to keep informed on both the quantity and quality of electrical service available to facility users. Therefore, an awareness of apparatus actions, which may indicate unacceptable harmonic levels, is necessary to determine where more precise data should be acquired.

a. Capacitors. Capacitor impedance decreases with frequency, and a capacitor bank acts as a harmonic sink where most harmonic problems are first noticed. Fuse blowing, without any obvious reason, or a capacitor unit failure, can be signs of a possible harmonic problem. A supply system inductance, in resonance with the capacitor bank, can cause large currents and voltages to develop. When, for no obvious reason, all fuses of a capacitor bank blow, it is probably a harmonic problem. If only one fuse blows, it is probably a reasonance problem.

b. Transformers. Harmonic currents cause increase copper and eddy current losses, and harmonic voltages cause increased iron and dielectric losses and insulation stress. There can be a possibility of resonance between transformer windings and line capacitance. Increased audible noise may result.

c. Cables. Harmonics result in increased copper and dielectric losses.

d. Protective relays. A higher level of harmonics is generally required to alter relay performance, but a range of 10 to 20 percent THD may affect relay operation. In general, high fault currents are not severely distorted, since the limiting impedance is the power system. The harmonic current, which is significant in relation to load current, will be much less significant in relation to fault current. High harmonic levels can cause electromechanical relays to chatter. Distance relays will see an altered impedance setting. Excessive third harmonics can cause misoperation of ground relays.

e. Instrumentation. Harmonics can lead to erroneous positive or negative errors for induction disc relays, which are normally calibrated for the fundamental current and voltage. Distortions of less than 20 percent THD will not cause significant errors, but in harmonic-rich environments, true rms sensing is needed for accurate measurements.

f. Switchgear The heating effect of the higher peak value of a very distorted voltage wave can result in premature failure of the switchgear insulating system. Circuit breakers interrupt current flow at zero current and a current wave with zeros at locations other than on the fundamental sine wave can cause circuit breakers to have premature interruption and restrike. Circuit breaker blowout coils can fail to interrupt currents. Loadbreak switches, fuses, and other switching devices can be subject to the same problems.

g. Miscellaneous. Equipment not normally part of exterior electric facilities can be affected by harmonics in the following ways:

(1) *Electronic equipment.* Electronic equipment is not only a source of harmonic currents, but is prone to misoperation if not operated on its correct voltage and current waveforms.

(2) *Rotating equipment.* Rotating machinery will see increased losses, possible reduction in available torque, and (conceivably) mechanical oscillations in prime mover/generator and motor/load combinations.

(3) *Incandescent lamps are the most sensitive to increased heating effect, which can significantly shorten lamp Life.* Gaseous discharge lighting, such as high-intensity discharge and fluorescent lamps, can produce harmonics from solid-state ballast components.

Affordable Wire Management, Exhibit No. EX1010
Case No. IPR2024-00182
Page 181 of 201

CHAPTER 17

MAINTENANCE SCHEDULES

Section I-CONSIDERATIONS

17-1. Maintenance planning.

Proper maintenance depends on realistic planning. The basic information required to establish a well planned program is detailed in chapter 1.

17-2. Maintenance priorities.

The electrical supervisor is responsible for determining the priority of each preventive maintenance operation. These priorities should reflect the function of each piece of equipment and local conditions that affect the serviceability of the equipment.

Section II-SCHEDULES

17-3. Maintenance frequency guides.

The maintenance frequencies indicated in table 17-1 are to be used as guides. The maintenance schedule for each installation should be based on a physical inventory of the electrical distribution system and the historical data available.

17-4. Revisions to maintenance schedules.

Maintenance schedules should be revised whenever additional or replacement equipment is installed, climatic conditions indicate a change is required, load conditions change or any other condition occurs that affects the operation of the system.

Table 17-l. Maintenance Frequencies

As required	Weekly	Monthly	Semi-annually	Annually	Every 2 years	Every 5 years		Paragraph reference
							Equipment	
X							Aerial lift devices	15-26.d
X							Anchor assemblies	4-54
X							Anchors, submarine cable	5.7
X				X			Arresters, surge, visual inspection	9-9.a
					X		Arresters, surge, electrical tests	9-9.b
X		X					Batteries, booster charge	14-17.f
X		X		X			Batteries, check	14-4.b(3)14-18
X		X					Batteries, equalizing charge	14-12
X			X				Batteries in storage	14-28
		X					Battery maintenance test equipment	Table 14-3
		X					Battery chargers	14-23a
X				X			Buses, substation	3-24.b
X				X			Bushings, inspection	3-33
X							Bushings, power factor tests	3-34.a
X							Bushings, insulation resistance test	3-36
				X			Cable maintenance tests	5-26.b
X							Cable, overhead	4-43
X				X			Cable, paper-insulated	5-24.b
X				X			Cable, pressure	5-24.e
X							Cablerecords	5-30
				X			Cable, submarine	5-l8.c,5-20
					X		Cable, underground, routine inspection	5-5
				X			Cable, underground, insulation resistance	5-27
X							Cable, underground, potential tests	5-28
X							Cable, underground corrosion	5-33
X							Cable, varnished-cambric	5-24.a
X			X				Capacitors	13-5
X							Capacitor bushings	13-8
X							Capacitor busbar supports	13-8
					X		Circuit breaker maintenance	8-13
				X			Circuit breaker, high-voltage	8-14
X					X		Circuit breaker, medium-voltage	8-15

Affordable Wire Management, Exhibit No. EX1010
Case No. IPR2024-00182
Page 182 of 201

Table 17-l. Maintenance Frequencies (continued)

As required	Weekly	Monthly	Semi-annu-ally	Annu-ally	Every 2 years	Every 5 years		Paragraph r
							Equipment	
X					X		Circuit breaker, low-voltage	8-16
					X		Circuit switchers	8-18
					X		Conductor resagging	4-39a
							Connections	1-16
X							Connectors, tap	4-46
		X					Contacts	1l.ll.c
X							Controls	11-11
		X		X			Control magnet-operated devices	11-1l.d
		X					Control thermally-operated devices	11-1l.e
		X					Control motor-operated devices	ll-1l.f
			X				Control mechanically-operated devices	ll-1l.g
			X				Control static accessories	11-1l.h
			X				Control, nonelectromagnetic	11-1l.i
						X	Crossarms	4-23
						X	cutouts	8-8(b),(c)
					X		Disconnecting switches	.8-9.c(1),8-l0.b,8-ll
X							Fuses	8-8.a
X					X		Grounds	l0-4,10-6
X							Guys and anchors	4-52c
						X	Hardware	4-32
X							Instruments and meters-inspection	12-6
				X			Instruments and meters-tests	12-7
X							Insulating liquids	Table 7-l
X						X	Insulators, distribution	4-5 lc
X					X		Insulators, substation	3-20
X							Interference, electromagnetic	16-5
X							Interference, harmonic	16-13
	X						Lamps	6-5
			X				Leathergoods	15-14
X			X				Lightning protection shielding devices	9-10
				X			Luminaires	6-7
				X			Manholes	5.9
X							Meters and instruments-inspection	12-6
				X			Meters and instruments-tests	12-7
X						X	Poles,wood	4-16.b
X							Poles,metal	4-29
X							Poles,concrete	4-34
X							Portable or mobile substations	15-26c
X				X			Potheads	5-25
X				X			Reclosers, automatic circuit	8-19
				X			Regulator,voltage	7-2.b(2)
X							Relays	11-4.b
				X			Relay settings	11-4.b
X							Resistors, bypass	9-13
			X				Rubber goods	15-9
					X		Servicedrop	Figure 4-13
				X			Streetlighting fixtures	6-4
X							Streetlighting lamps	6-5
				X			Streetlighting photocells	6-8.c
					X		Streetlighting protective relays	6-14.a
					X		Streetlighting primary oil switch	6-14.b
		X					Substation fence and gate	3-16.c
		X					Substation signs	3-17
X							Substation yard	3-18
				X			Substation overall, infrared	3-5
		X					Substation overall, visual	3-5
X					X		Switch, load interrupter	8-9.c(2),8-11
			X				Switch, photoelectric	6-8.C

Table 17-l. Maintenance Frequencies (continued)

As required	Weekly	Monthly	Semi-annu-ally	Annu-ally	Every 2 years	Every 5 years		Paragraph r
							Equipment	
		X	.....	.....	.....	.....	Switch, time (accuracy).	6-8.a
				X	.....	.....	Switch, time (contacts)	6-8.a
X	.....	.....	.....	X	.....	.....	Tap changer, load	Table 7-l
X	.....	.....	.....	.....	.....	.....	Telephone interference	16-9
X	.....	.....	.....	X	.....	.....	Terminations	5-25
			X	.....	.....	.....	Test instrument calibrations, analog.	2-4.b
				X	.....	.....	Test instrument calibrations, other.	2-4.b
X							Tools, live-line inspection.	15-17.b
X				X	.....	.....	Tools, live-line test records.	15-17.a
				X	.....	.....	Transformer, constant current	6-15.a
X	.....	.....	.....	X	.....	.....	Transformer, distribution.	7-4.b
X	.....	.....	.....	.....	.....	.....	Transformer, instrument	3-29. 3-30
X							Transformer, power	7-4.a
X					X	.....	Tree trimming.	4-57.c

Affordable Wire Management, Exhibit No. EX1010
Case No. IPR2024-00182
Page 184 of 201

APPENDIX A

REFERENCES

Government Publications

Code of Federal Regulations (CFR).

Superintendent of Documents, U.S. Government Printing Office, Washington, DC 20402

29 CFR 1910	Occupational Safety and Health, General Industry Standards.
29 CFR 1926	Occupational Safety and Health, Safety and Health Regulations for Construction.

Department of the Army, Navy, and Air Force.

TM 5-682	Facilities Engineering, Electrical Facility Safety.
TM 5-683/NAVFAC MO-ll6/AFJMAN 32-1083	Electrical Interior Facilities.
TM 5-8 ll- l/AFJMAN 32-1080	Electrical Power Supply and Distribution.
TM 5-811-7	Electrical Design, Cathodic Protection.
NAVFAC MO-202	Overhead Power Lines, Electromagnetic Interference Handbook.
NAVFAC P-1060	Electrical Transmission and Distribution Safety Manual.
AFI 32-1054	Corrosion Control.
AFI 32-1078	Electrical Worker Safety
AFT0 36C-1-4	Dielectric Testing of Insulated Aerial Manlift Devices.
MIL-HDBK-1003A/ll	Diesel-Electric Generating Plants.
MIL-HDBK-100400	Electrical Engineering, Cathodic Protection.

Department of Defense, Defense Printing Service.

Detachment Office, Building 4D NPN-DODSSP, 700 Robbins Avenue, Philadelphia, PA 19111-5094

Index of Specifications and Standards.

Federal Aviation Administration (FAA)

Superintendent of Documents, PO. Box 371954, Pittsburgh, PA 15250-7954

FAA AC-00-2.8	Advisory Circular Checklist.
FAA AC-150/5340-26	Maintenance of Airport Visual Aid Facilities.

Military Specifications (MIL).

Defense Printing Service (DPS)
Attention: Cataloging, Building 4D NPN-DODSSP.
700 Robbins Avenue, Philadelphia, PA 19111-5094

MIL-V-173C	Varnish, Moisture and Fungus Resistant (for Treatment of Communications, Electronic, and Associated Equipment).

Nongovernment Publications

American Association of State Highway and Transportation Officials (ASSHTO).

444 N. Capitol Street NW, Washington, DC 20001

AASHTO Division II. 13.2	Painting Metal Structures.

Affordable Wire Management, Exhibit No. EX1010
Case No. IPR2024-00182
Page 185 of 201

American National Standards Institute (ANSI).
11 West 42nd Street, New York, NY 10036

ANSI c2	National Electrical Safety Code.
ANSI c29.2	Insulators, Wet-Process Porcelain and Toughened Glass, Suspension Type.
ANSI c29.5	Wet-Process Porcelain Insulators, Low- and Medium-Voltage Types.
ANSI C29.6	Wet-Process Porcelain Insulators, High-Voltage Pin Type.
ANSI c29.7	Wet-Process Porcelain Insulators, High-Voltage Line-Post Type.
ANSI C84.1	Electric Power Systems and Equipment, Voltage Ratings (60-Hertz).
ANSI c119.4	Electric Connectors, Connectors for Use Between Aluminum-to-Aluminum or Aluminum-to-Copper Bare Overhead Conductors.
ANSI 05.1	Wood Poles, Specifications and Dimensions
ANSI 289.1	Personal Protection, Protective Headwear for Industrial Workers, Requirements.
ANSI 2133.1	Tree Care Operations, Pruning, Trimming, Repairing, Maintaining, and Removing Trees, and Cutting Brush, Safety Requirements.
ANSI/IEEE 18	Standard for Shunt Power Capacitors.
ANSI/IEEE 48	Standard Test Procedure and Requirements for High-Voltage Alternating-Current Cable Terminations.
ANSI/IEEE 80	Guide for Safety in AC Substation Grounding.
ANSI/IEEE 81	Guide for Measuring Earth Resistivity, Ground Impedance, and Earth Surface Potentials of a Ground System.
ANSI/IEEE 400	Guide for Making High-Direct-Voltage Tests on Power Cable Systems in the Field.
ANSI/IEEE 450	Recommended Practice for Maintenance, Testing, and Replacement of Large Lead Storage Batteries for Generating Stations and Substations.
ANSI/IEEE 516	IEEE Guide for Maintenance Methods on Energized Power Lines.
ANSI/IEEE 935	IEEE Guide on Terminology for Tools and Equipment. To Be Used in Live Line Working.
ANSI/IEEE 957	IEEE Guide for Cleaning Insulators.
ANSI/IEEE 1106	Recommended Practice for Maintenance, Testing, and Replacement of Nickel-Cadmium Storage Batteries for Generating Stations and Substations.
ANSI/IEEE C367.60	Standard Requirements for Overhead, Pad-mounted, Dry Vault and Submersible Automatic Circuit Reclosers and Fault Interrupters for AC Systems.
ANSI C37.6l/IEEE 321	Standard Guide for the Application, Operation, and Maintenance of Automatic Circuit Reclosers.
ANSI/IEEE C37.90	Standard for Relays and Relay Systems Associated with Electric Power Apparatus.
ANSI/IEEE C57.12.80	Standard Terminology for Power and Distribution Transformers.

Affordable Wire Management, Exhibit No. EX1010
Case No. IPR2024-00182
Page 186 of 201

ANSI/IEEE C57.12.90	Standard Test Code for Liquid-Immersed Distribution, Power, and Regulating Transformers and Guide for Short-Circuit Testing of Distribution and Power Transformers.
ANSI/IEEE C57.91	Guide for Loading Mineral-Oil-Immersed Overhead and Pad-Mounted Distribution Transformers Rated 500 kVA and Less with 65 Degree C or 55 Degree C Average Winding Rise.
ANSI/IEEE C57.92	Guide for Loading Mineral-Oil-Immersed Power Transformers Up to and Including 100 MVA with 55 Degree C and 65 Degree C Average Winding Rise.
ANSI/IEEE C57.96	Guide for Loading Dry-Type Distribution Power Transformers.
ANSI/IEEE C57.106	Guide for Acceptance and Maintenance of Insulating Oil in Equipment.
ANSI/SIA A92.9	Vehicle-Mounted Elevated and Rotating Aerial Devices.

American Society for Testing and Materials (ASTM).
1916 Race Street, Philadelphia, PA 19103-1187

ASTM A 90	Standard Test Method for Weight (Mass) of Coating on Iron and Steel Articles with Zinc or Zinc-Alloy Coatings.
ASTM D 117	Standard Guide To Test Methods and Specifications for Electrical Insulating Oils of Petroleum Origin.
ASTM D 150	Standard Test Methods for AC Loss Characteristics and Perxnitivity (Dielectric Constant) of Solid Electrical Insulation.
ASTM D 178	Standard Specification for Rubber Insulating Matting.
ASTM D 877	Standard Test Method for Dielectric Breakdown Voltage of Insulating Liquids Using Disk Electrodes.
ASTM D 923	Standard Test Method for Sampling Electrical Insulating Liquids.
ASTM D 924	Standard Test Method for Dissipation Factor (or Power Factor) and Relative Permitivity (Dielectric Constant) of Electrical Insulating Liquids.
ASTM D 971	Standard Test Method for Interfacial Tension of Oil Against Water by the Ring Method.
ASTM D 1524	Standard Test Method for Visual Examination of Used Electrical Insulating Oils of Petroleum Origin in the Field.
ASTM D 1534	Standard Test Method for Approximate Acidity in Electrical Insulating Liquids by Color Indicator Titration.
ASTM D 2285	Standard Test Method for Interfacial Tension of Electrical Insulating Oils of Petroleum Origin Against Water by the Drop-Weight Method.
ASTM D 3612	Standard Test Method for Analysis of Gases Dissolved in Electrical Insulating Oil by Gas Chromatography.
ASTM F 18-Series	ASTM Standard on Electrical Protective Equipment for Workers.
ASTM F 478	Standard Specification for In-Service Care of Insulating Line Hose and Covers.
ASTM F 479	Standard Specification for In-Service Care of Insulating Blankets.
ASTM F 496	Standard Specification for In-Service Care of Insulating Gloves and Sleeves.
ASTM F 855	Standard Specifications for Temporary Grounding Systems To Be Used on De-Energized Electric Power Lines and Equipment.

Affordable Wire Management, Exhibit No. EX1010
Case No. IPR2024-00182
Page 187 of 201

ASTM F 877	Specifications for Personal Climbing Equipment.
ASTM F 1236	Standard Guide for Visual Inspection of Electrical Protective Rubber Products.

American Wood-Preservers' Association (AWPA).
P.O. Box *286,* Woodstock, MD 21163-0286

AWPA M6	Brands Used on Forest Products.

Illuminating Engineer Society of North America (IESNA).
120 Wall Street, 17th Floor, New York, NY 10005
Lighting Handbook, References and Application.

Institute of Electrical and Electronics Engineers, Inc. (IEEE).
445 Hoes Lane, P.O. Box 1331, Piscataway, NJ 08855-1331

IEEE 62	Guide for Field Testing Power Apparatus Insulation.
IEEE 142	Recommended Practice for Grounding of Industrial and Commercial Power Systems.
IEEE 519	Recommended Practices and Requirements for Harmonic Control in Electrical Power Systems.
IEEE 9'78	Guide for In-Service Maintenance and Electrical Testing of Live-Line Tools.
IEEE 1048	Guide for Protective Grounding of Power Lines.
IEEE C37.2	Standard Electrical Power System Device Function Numbers.
IEEE C57.104	Guide for the Interpretation of Gases Generated in Oil-Immersed Transformers.
IEEE S-135-l	Power Cable Ampacities Volume I, Copper Conductors.
IEEE S-135-2	Power Cable Ampacities Volume II, Aluminum Conductors.

InterNational Electrical Testing Association (NETA).
P.O. Box 687, Morrison, CO 80465

NETA MTS-1993	Maintenance Testing Specifications for Distribution Equipment and Systems.

National Fire Protection Association (NFPA).
One Batterymarch Park, P.O. Box 9101, Quincy, MA 02269-9101

NFPA 70	National Electrical Code.
NFPA 70B	Recommended Practice for Electrical Equipment Maintenance.

Steel Structures Painting Council (SSPC).
4516 Henry Street, Suite 301, Pittsburgh, PA 15213-1113
Steel Structure Painting Manual, Volume I, Good Painting Practices

American Electrician's Handbook by Terre11 Croft and Wilford J. Summers, McGraw-Hill, Inc., 1221 Avenue of the Americas, New York, NY 10020-1001.

The Lineman's and Cableman's Handbook by Edwin B. Kurtz and Thomas M. Shoemaker, McGraw-Hill, Inc., 1221 Avenue of the Americas, New York, NY 10020-1001.

Electrical Equipment Testing and Maintenance by A.S. Gill, Prentice Hall, Route 9W, Englewood Cliffs, NJ 07632-0000

Affordable Wire Management, Exhibit No. EX1010
Case No. IPR2024-00182
Page 188 of 201

APPENDIX B

BIBLIOGRAPHY

Cordage Institute (CI).
42 North Street, Hingham, MA 02043

CIE-1	The Splicing Handbook.
CIE-4	Knot Typing and Rigging.
CIF-1	Fundamentals of Fall Protection.

Edison Electric Institute (EEI).
1111 Nineteenth Street NW, Washington, DC 20036-3691
Use and Care of Pole Climbing Equipment.

Affordable Wire Management, Exhibit No. EX1010
Case No. IPR2024-00182
Page 189 of 201

APPENDIX C

ADDITIONAL WOOD POLE DATA

C-1. Related pole data.

This appendix provides related data on wood poles which is not readily available in regard to general factors affecting pole life. Understanding the influence of these variables will help maintenance workers understand what contributes to the life of a wood pole installation both by the quality of its initial treatment and by the actions of the environment in which the pole is installed.

C-2. Why wood poles fail.

Wood poles generally fail because of pest damage or from wood-rotting fungi. A good preservative treatment discourages both. The ability of treated poles to resist deterioration depends principally upon the thoroughness and quality of the original preservative treatment and to a lesser extent on the type of wood and local climatic conditions.

C-3. Initial installation.

Maintenance personnel should be familiar with how much pole life is influenced by the quality of the preservative treatment. It is recommended that replacement wood poles and crossarms be produced by a treatment plant which is under the National Rural Electric Cooperative Association's (NRECA) wood quality control (WQC) program. Each wood pole and crossarm should bear the WQC symbol. This program was set up by the Rural Electrification Administration (REA) with NRECA to ensure a source of high quality treated wood products for utility company purchasers. This source should eliminate wood products that have been damaged or improperly prepared by a treatment plant.

a. Pole *damage.* Wood undergoing treatment can be damaged by too high a temperature or pressure or both; use of overseasoned wood; undetected defects; and improper handling or storage methods.

b. Improper preparation. Shallow or erratic penetration, low preservative retention, and inadequate toxicity and permanence of preservative occur when the wood treatment plant has an inadequate quality control program resulting in inaccurate, inadequate, or uneven treatment cycles during the treatment process. Most wood preservatives are restricted-use pesticides which can only be applied by certified applicators.

C-4. Types of wood.

Overhead electric distribution circuits and equipment are most commonly supported on wood poles of southern yellow pine and western red cedar. Douglas fir, western larch, red or jack pine, lodgepole pine, or ponderosa pine are used where available.

C-5. Influence of local conditions.

Preservative treatment only delays the ravages of pests and fungus, and does not eliminate pole decay. Local conditions will have a direct influence on the speed of decay and directly affect the mechanical strength of poles. Pole strengths must be maintained above definite minimum requirements to meet safety requirements.

a. Adequate strength. Poles must be maintained at all times to withstand the applicable loads resulting from the conductors and equipment weights carried, as well as the influence of weather conditions. In the United States, three loading districts based on weather conditions are recognized by the NESC. These loading districts are designated as light, medium, and heavy. Loading districts are indicated on the general loading map of the United States contained in the NESC.

b. Cause of damaging actions to wood poles. Insects and other pests can attack poles in most geographical areas. Termites, wood-boring beetles, and even carpenter bees and ants, may cause serious damage. Poles that are heavily infested with insects attract wood-damaging birds, such as woodpeckers. Fire and improper handling of poles during installation or maintenance can also cause damage.

(1) *Termites and other insect damage.*

(a) Termites. Two classes of termites attack poles: the ground-dwelling termites, which are found in practically every state; and the dry-wood (or aerial) termites found only in the south. Generally, the same measures taken to prevent decay-good preservative treatment-also prevent termite attack.

(b) Ants. Black and brown carpenter ants are often a serious problem, especially in cedar poles in the northeastern states. The ants enter the pole through a check (separation along the grain of the wood occurring across the annual rings) or injury and construct galleries that seriously weaken the pole near the ground line. Unlike termites, they do not use the wood for food.

(c) Control. Ants may be effectively destroyed by injecting about one pint (0.5 liter) of an approved termite repellant into the interconnected galleries. This can be done with an ordinary grease

Affordable Wire Management, Exhibit No. EX1010
Case No. IPR2024-00182
Page 190 of 201

gun, fitted with a suitable nozzle, applied at two or three holes bored to connect with the galleries. Occasionally, ground-dwelling termites are found in otherwise sound poles, and they may be destroyed in the same manner.

(d) Certified *personnel.* Use of a certified pest control company and personnel or entomologist to perform treatments which employ insect repellent chemicals. Personnel certification must be by the state in which the facility is located.

(2) *Woodpecker damage.* Many ideas have been tried out by pole users in an effort to outwit these birds, but nothing has been proven to be economically justifiable. Considerable study is in progress on the problem. In the meantime, two points are worth keeping in mind.

(a) Direct *damage.* There is some tendency to exaggerate the damage done by woodpeckers. The breaking point of a pole is near the ground line. Most woodpecker attacks occur above the midsection. The Rural Electrification Administration (REA) indicates that damaging actions which cause less than a 25 percent wood loss above the midsection probably will not result in a serious loss of pole strength. With consideration to wind loading, woodpecker holes are less damaging when on wire-line connection faces rather than on nonwire-line pole faces.

(b) Secondary damage. Woodpecker holes often expose untreated wood to moisture and the spores of fungi, with resultant decay that weakens the pole far beyond that done by the holes themselves. A woodpecker selects a pole only by chance, and that first hole invites further attack by other woodpeckers. For these reasons, it is good maintenance practice to seal these holes. Epoxy formulations are available for repair of bird damage.

(c) Nest poles. Experience at some facilities shows that if a nest pole needs to be removed and replaced, the new pole will be singled out for a new nest. Based on facility experience, it may be better to leave the nest pole standing and transfer conductors to an adjacent new pole.

(3) *Fire damage.* Many poles are lost or damaged as a result of fires. Freshly treated poles can often be easily ignited, but after a few months in service they become more resistant to fire. Where grass fires are of annual occurrence, the grass around poles should be eliminated in the spring with commercial weed killers. A water-soluble type soil-sterilant is recommended, which will keep weeds down for a 3-year period.

(4) *Other damage.* Poles can be damaged by improper loading and storage methods or by poor field installation.

(a) Unloading. Poles should be unloaded by approved methods. Instructions on unloading and hauling poles are given in "The Lineman's and Cableman's Handbook." Care should also be used in unloading from trucks or pole trailers and in all handling, both to prevent damage to the workers and to the pole. Some poles may break or crack when subjected to sudden shock but would have had adequate strength for normal use. Pointed tools are not recommended for handling poles; but if necessary they should be applied only near the butt end.

(b) *Storage.* Poles should be installed as rapidly as possible after they are received as poles deteriorate even in storage. Proper storage methods can reduce this to a minimum. Poles should be stored in a well-drained yard devoid of vegetation and debris and on skids (preferably metal) 30 inches (75 centimeters) above ground. Spacing the poles to provide adequate ventilation is necessary. To protect the poles from disease, spacing blocks should be clean treated timber. Pole stacks should be adequately supported to prevent bending, crushing, or distortion of poles. All poles should be turned to expose different areas to rain and sun every 6 months. Additional preservative should be applied as needed, particularly on former support bearing areas. Poles stored for more than 1 year should be given a groundline supplementary treatment.

(c) Field installation. All boring and gaining should be done by the supplier before the original treatment. When it is necessary to do any framing or boring of treated poles in the field, any gains or holes should be promptly and carefully treated with generous applications of an approved preservative. Unused holes should be filled with an approved preservative and sealed with a tight-fitting treated plug.

c. Wood-rotting fungi and decay. All species of fungi weaken wood. Once fungi have gained a foothold, the destructive attack continues at an increasing rate over a larger and larger area. By the time decay to the depth of ¼-inch (0.6 millimeters) is detected, the loss of strength has gone to the depth of an inch (25 millimeters) or more. Speed of decay is affected by moisture, temperature, type of soil, and optimum time element.

(1) *Moisture.* All growing fungi require a moisture content in the wood of 25 to 50 percent, though some forms of brown rot occur when little moisture is present and are sometimes called "dry rot." Wood continuously wet does not decay, due to the exclusion of air. When wood is dry, fungi become dormant, but start growing again when the required moisture conditions are restored. Due to the narrow range of moisture requirements, wood alternately

Affordable Wire Management, Exhibit No. EX1010
Case No. IPR2024-00182
Page 191 of 201

wet and dry is commonly subject to rapid decay, a possible occurrence in warm regions with frequent rainfall.

(2) *Temperature.* The temperature range of rapid fungus growth is 75 to 95 degrees F (24 to 35 degrees C). As temperature decreases below 75 degrees F (24 degrees C), the rate of growth decreases, and at about 40 degrees F (5 degrees C) fungi become dormant but resume growth when the temperature increases.

(3) *Type of soil.* A porous soil, and one slightly acid (hydrogen ion concentration or pH of 4 to 6) and containing certain mineral requirements, promotes most rapid decay. The growth of fungi usually stops about 5 feet (1.5 meters) below the surface of the ground due to lack of air, and in compact soil decay usually extends no deeper than 2 feet (0.6 meters).

(4) *Optimum time element.* Since temperature and moisture are the most important considerations, the time element, or number of days in the year when optimum decay conditions prevail, becomes an important factor. In southeastern states, for example, fungi are generally more active throughout a greater part of the year than in other parts of the country, but local topography can affect the situation in small areas.

C-6. Decay patterns.

The pattern of decay varies dependent upon the influence of each of the preceding pole failure factors and results in the following types of damage.

a. Surface damage. Surface damage from external decay above the ground line is more or less visible, but digging is required to reveal damage below the ground line.

(1) *External decay.* In any species of timber, external decay results from a poor preservative treatment or too low an absorption of preservative. In older poles, it is a consequence of gradual loss of most of the preservative in the sapwood through leaching, evaporation, and chemical change. In most cases, the first occurrence of decay will be just below the ground line. This is where the conditions of moisture, temperature, air, and the absence of direct sunlight are most favorable to the growth of fungi. Unfortunately, this is a portion of the pole usually hidden from view and most affected by a reduction in strength.

(2) *Loss of strength.* Loss of strength at the ground line is critical because this part of the pole is stressed the most in bending. Figures C-l and C-2 show the results of surface decay on a 12-inch (300-millimeter) diameter pole. Any pole with extensive decay, as shown in these figures, is dangerous and should be replaced immediately.

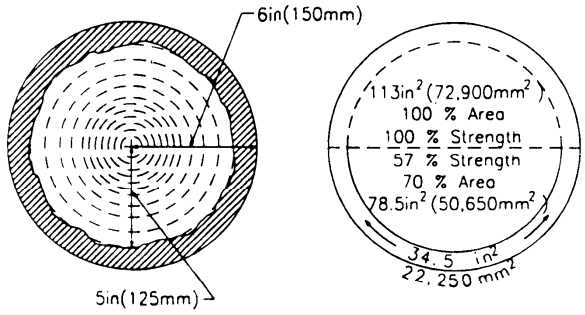

Decay has reduced 12-inches (300 millimeter) pole to 10 inches (250 millimeter) pole with only 70% of cross section (load supporting ability) end 57X of strength (resistance to bendrng) remaining

Figure C-l. Twelve-inch (300-millimeter) pole with l-inch (25-millimeter) surface decay

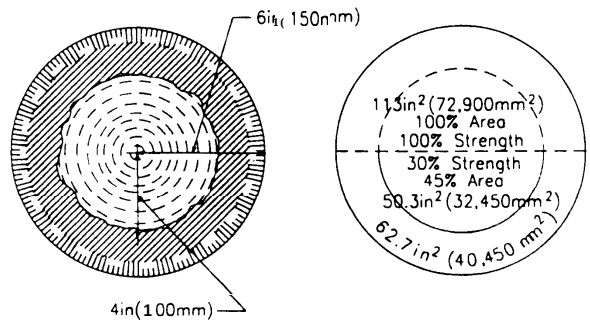

Decay hes reduced 12-inch (300 millimeter) pole to 8-inch (200 millimeter) pole with only 45X of cross section (load supporting ability) end 30% of strength (resistance of bendrng) remaining

Figure C-2. Twelve-inch (300-millimeter) pole with 2-inch (50-millimeter) surface decay

b. Interior damage. Interior damage from internal decay that occurs in the interior of the pole is known as “heart rot” or “hollow heart” and requires sound testing or probing to reveal its existence and extent.

(1) *Internal decay.* When the preservative in the sapwood is shallow in depth, fungi may gain access through a check or injury to attack the untreated inner sapwood and the heartwood. Pine poles are particularly susceptible to internal decay if not thoroughly treated. Deep separations (checks), occurring after treatment, or woodpecker holes expose untreated wood to internal decay. Occasionally deep-seated infection in seasoned poles is not killed during the treating process and continues to grow, resulting in premature reduction of strength.

Affordable Wire Management, Exhibit No. EX1010
Case No. IPR2024-00182
Page 192 of 201

(2) *Loss of strength*. Hollow heart exists to some extent in almost all poles; it may be only from the butt up, or from the top down, or go all the way through. The load-supporting ability is reduced in proportion to the hollow area, just as it is for surface rot (as shown in figure C-3). However, due to the location of the affected area, the reduction of strength in bending is less than for surface rot. Because it is hidden, the uncertainty as to the extent of hollow heart may lead to dangerous conditions. If the hollow heart shown in figure C-3 is combined with the surface deterioration of figure C-2 (and this does happen), there is no remaining strength.

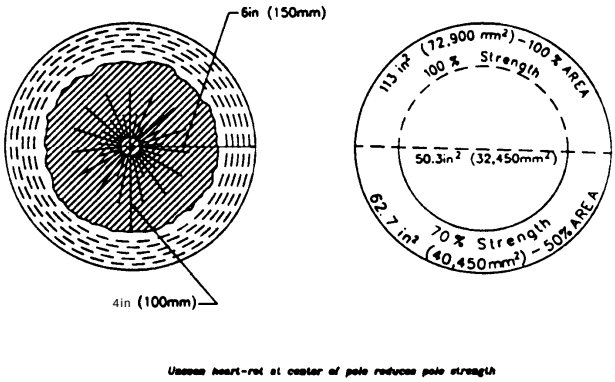

Figure C-3. Twelve-inch (300-millimeter) pole with 4-inch (100-centimeter) radial heart-rot

INDEX

Paragraphs

A

Aerial-lift, construction 4–66
maintenance 15–26
operations 4–67
type 15–25
Air terminals 9–9
Anchors, guy 4–50
submarine cable 5–20
Arcing gaps, bushing 3–33
Armor rods 4–33
Arrester, lightning—see "Surge arrester"
Asbestos 15–5

B

Backfilling pole 4–14, 4–31
Ballasts 6–4
Barehand live-line maintenance 4–64
Barriers 15–11
Batteries in storage 14–27
inspection of 14–28
Batteries in service, connections 14–26
lead-acid 14–24
nickel-cadmium 14–25
Battery chargers, accessories 14–22
maintenance 14–23
rectifier 14–21
requirements 14–20
Battery, charging considerations 14–10
equalizing charge 14–12
floating charge 14–11
precautions 14–9
Batteries, disposal 14–30
flooded, lead-acid, inspection visual 14–5
measurements 14–6
testing 14–8
inspection 14–18
maintenance, general 14–4
specifics 14–7
nickel-cadmium, description 14–16
requirements 14–17
replacement 14–29
safety 14–3
troubleshooting 14–19
types 14–2
valve-regulated, charging 14–4
differences 14–13
temperature compensation 14–15
usage 14–1
Belts, body 15–14
Bonding guidance 5–2
safety 5–21
Brace, push 4–50
Braces, crossarm 4–20
Bugs (split-bolt connector) 4–42
Bus, cleaning 3–25
maintenance 3–24
substation, definition 3–23
testing 3–26
Bushing, arcing gaps 3–33
carbon deposits 3–33
compound migration 3–33

Paragraphs

conductor lead 3–33
definition 3–31
gaskets 3–33
ground sleeve 3–33
insulation resistance test 3–35
maintenance 3–33
oil gage 3–33
level 3–33
power factor test 3–34
schedule 3–34
Bushings, circuit breaker 8–14
porcelain 3–33
visual inspection of 3–33

C

Cable, aerial construction 4–38
concentric neutral 5–23, 5–24
faults, locating—see "Fault locating"
frequency 5–5
fireproofing 5–4, 5–25
identification 5–2
insulation, power factor test 5–29
resistance test 5–27
lashing 4–39
lead-sheathed 5–24
loading 5–2
maintenance, underground cable 5–19
submarine cable 5–20
tests, records and frequency 5–31
messenger 4–39
overvoltage test 5–28
paper-insulated 5–24
pressure leak test 5–24
repair, flat metal armor 5–24
interlocked armor sheath 5–24
lead sheath 5–24
protective jacket 5–24
sheath (overhead) 4–49
submarine 5–20
underground 5–1, 5–19
wire armor 5–24
safety precautions 5–4, 5–21, 5–28
sheath leaks, submarine 5–18
solid dielectric 5–23
submarine 5–20
supports 5–7
varnished-cambric insulated 5–24
Calibration, instruments and meters 12–17
Capacitor, dielectrics 13–4
fuses 13–11
exposure 13–9
inspection 13–6
power 13–1
series 13–2
shunt 13–2
application 13–3
temperature 13–8
tests, field 13–12
terminal to case insulation 13–12
terminal to terminal voltage 13–12
leak 13–13
ventilation 13–7

Affordable Wire Management, Exhibit No. EX1010
Case No. IPR2024-00182
Page 194 of 201

Paragraphs
Carbon deposits, bushings 3–33
Certification of personnel—see "Personnel certification"
Ceramics, cleaning 3–22
inspection 3–21
repair 3–21
Chemicals, hazardous 15–8
tree killing 4–66
Circuit breaker, definition 8–12
maintenance frequency 8–13
safety measures 8–12
troubleshooting 8–17
Circuit interrupting devices 8–1
instruction manuals 8–2
insulating media 8–1
location 8–1
purpose 8–1
Circuit switchers 8–18
Clamp, hot line 4–42
Cleaning, buses 3–25
bushings 3–33
insulators, pole line 4–47
substation 3–22
Clearances, tree trimming 4–54
Climbers 15–15
Climbing space 4–2, 4–54
Codes, application 1–3
ground resistance 10–6
loading districts C–5
overhead, aerial lifts 4–67
insulators 4–47
sags 4–35
tools 15–1
transformers 7–6
Combustible gases—see "Gases, combustible"
Concrete, foundations 3–13, 4–31
poles 4–30
Conductor, aluminum 4–33
copper 4–33
copper-clad steel 4–33
covering 4–34
damage 4–36
loading districts C–5
material 4–33
repairs 4–37
sags 4–35
ties 4–46
Connections, aluminum 1–16
conductor 1–16
dissimilar metals 1–16
soldered 4–33
Connectors, compression 4–42
tap 4–42
Constant current regulator—see "Regulator, constant current"
Contacts, circuit breaker 8–14, 8–15, 8–16
control 11–11
relay 11–5
switch 8–11
Contamination of insulators 3–22
Control, equipment function 11–10
inspections 11–11
maintenance 11–11
photoelectric 6–8
repair parts 11–11
test equipment 11–11
troubleshooting 11–12
Corrosion, underground 5–32
galvanic 5–34
grounding 10–5
prevention 5–34
type of 5–33
Crossarms 4–19
Current transformer, definition 3–27
maintenance 3–29
safety precautions 3–29
short-circuited secondary 3–28
tests 3–30
Cutout, film disk (lighting) 6–14
plug type (lighting) 6–14

D

Dead-end bells 4–46
Decay, pole C–2, C–3, C–6
Dielectric tests, solid insulation 7–7
Digger, pole hole 15–2, 15–26
Duct, entrances 5–7
structures, maintenance and repair 5–10
system, maintenance and repair 5–9

E

Electrode, ground 10–1
Emergency operating instructions 1–6
End bells 5–7
Equipment, conditions 2–1
inspection and test of 15–27, 15–28
Explosive gases—see "Gases, combustible"

F

Fault locating, cable 5–11
locating, equipment 5–16
methods 5–18
simplifying 5–15
visually 5–12
tests 5–14
tracing 5–17
types 5–13
Fixtures, maintenance 6–7
Frequency of inspections and tests 2–5
Fuses, medium-voltage power usage 8–5
maintenance 8–8
operation 8–6
replacement 8–7

G

Galvanic corrosion, grounding 10–5
underground 5–34
Gases, combustible 5–4
toxic 5–4
Gloves, rubber 15–9
Ground, electrode 10–1
reduction of resistance 10–9
resistance of, measurement 10–8
testing 10–7
wire, overhead 9–9
Grounding 5–21
personal protective 1–12
protective equipment 15–13
Grounds, corrosion of 10–5
inspection of 10–4

Affordable Wire Management, Exhibit No. EX1010
Case No. IPR2024-00182
Page 195 of 201

Paragraphs
testing of ... 10–8
Guy, anchor ... 4–50
markers ... 4–48
method of attachment ... 4–51
requirements ... 4–48
strain insulators ... 4–52
strand ... 4–49

H

Hand tools—see "Tools, hand"
Hardware, pole line ... 4–28
Harmonic causes ... 16–10
interference ... 16–3, 16–13
measurements ... 16–12
power quality ... 16–11, 16–12
Hazards, minimizing ... 1–8
substances ... 15–4
Helmets ... 15–10
Hot line clamp ... 4–42
Hydraulic fluid, insulating ... 15–22

I

Identification, cable ... 5–2
pole and tower ... 4–2
Induced voltage surges ... 9–2
Infrared inspection ... 3–7
testing ... 3–7
Insect damage to poles ... C–5
Inspection, rubber goods ... 15–9
substation buses ... 3–24
wood poles, instructions ... 4–13
pole-by-pole ... 4–15
records ... 4–12
spot ... 4–14
Instruments and meters, accuracy ... 12–11
adjustment ... 12–12
calibration ... 12–17
definition, instruments ... 12–1
meters ... 12–2
fixed ... 12–4
installation ... 12–9
inspection ... 12–6
maintenance ... 12–10
measurement validity ... 12–10
mounting ... 12–8
portable ... 12–5
repairs, field ... 12–13
shop ... 12–14
tests ... 12–7
troubleshooting, general ... 12–18
stray fields ... 12–16
temperature ... 12–15
Insulating liquids ... 7–8
Insulators, cleaning, pole line ... 4–47
substation ... 3–22
disc ... 6–14
general ... 4–45
guy strain ... 4–52
inspection ... 3–21
pin ... 4–46
post ... 4–46
repair ... 3–21
spool and knob ... 4–46
suspension ... 4–46

Paragraphs
switch ... 8–11
test ... 3–20
ties ... 4–46
Insulation, high potential test ... 7–7
polarization index ... 7–7
power factor test, bushings ... 3–34
cable ... 5–29
transformers ... 7–7
resistance ... 7–7
Interference, checking ... 16–8
electromagnetic ... 16–2
harmonic ... 16–3
communications ... 16–9
location of ... 16–7
radio, conductor ties ... 4–46
distribution system ... 16–4
origins ... 16–5
power quality ... 16–1
weather conditions ... 16–6

J

Joint use of poles ... 4–2

L

Ladders ... 15–16
Lamps ... 6–5
Lashing, cable ... 4–39
Leak test, capacitor ... 13–13
pressure, cable ... 5–12
Leather goods ... 15–14
Light distribution patterns ... 6–10
Lighting, multiple circuit ... 6–2
multiple circuit components ... 6–3
outdoor ... 6–1
series circuit ... 6–2
Lightning arrester—see "Surge arrester"
Lightning ground wire, overhead ... 9–9
masts ... 9–9
rods ... 9–9
Liquids insulating ... 7–8
Live-line maintenance, categories ... 4–63
methods ... 4–64
operation ... 4–65
Loading districts, conductor ... C–5
Locator, radio interference ... 16–8
Luminaires ... 6–4
components ... 6–6
lamps ... 6–5
maintenance ... 6–7

M

Maintenance proof-testing, frequency ... 17–3, 17–4
planning ... 17–1
priorities ... 17–2
reasons ... 2–2
respnsibility ... 1–5
scheduling ... 1–7
standards ... 1–4
Manholes ... 5–6, 5–9
Masts, lightning ... 9–9
Messenger, cable ... 4–24
Metal poles ... 4–26
painting ... 4–29

Affordable Wire Management, Exhibit No. EX1010
Case No. IPR2024-00182
Page 196 of 201

Paragraphs
towers ... 4–27
use ... 4–25
Meter, battery charger ... 14–11
Meters—also see "Instruments and meters"
Moisture test ... 5–30
Multiple circuit characteristics ... 6–2

N

Nonceramics, cleaning ... 3–23
inspection ... 3–21
repair ... 3–21
Numbering, pole and tower ... 4–2

O

Operating conditions ... 1–14
OSHA, aerial lift ... 15–18
live-line tools ... 4–67
references ... 1–2
Outdoor lighting, circuits ... 6–2
airfield lighting ... 6–12
floodlighting ... 6–11
roadway lighting ... 6–10
standards ... 6–9
use ... 6–1
Overhead distribution, components ... 4–8
construction ... 4–1
guidance ... 4–2
line maintenance ... 4–9
open wire ... 4–32
Obstructions ... 4–2
Oil, circuit breakers ... 8–14
tests, transformer ... 7–8

P

Painting, metal poles ... 4–29
galvanized steel ... 3–9
painted steel ... 3–10
structures, aluminum ... 3–11
Painting of metals ... 4–25
PCB—see "Polychlorinated biphenyls"
Personnel requiring certification and qualification, general. 1–9, 1–10
live-line work ... 4–22
wood treatment work ... 4–62
Personnel for tests, general ... 2–4
power factor ... 3–34
Pesticides ... 4–14
Pins, insulator ... 4–46
Platforms ... 4–21
Poisonous plants ... 4–61
Pole, adequacy ... 4–16
damage ... C–5
identification ... 4–1
inspection of wood ... 4–14
joint use of ... 4–2
line hardware ... 4–28
line maintenance ... 4–8, 4–9
metal ... 4–26
reinforcing ... 4–18
replacement ... 4–17
storage ... C–5
treatment, initial ... C–3
in place above ground line ... 4–23
at or below ground line ... 4–24

Paragraphs
Polychlorinated biphenyls ... 15–6
Porcelain—see "Ceramics"
Potential transformer—see "Voltage transformer"
Potential troubles ... 1–15
Potheads, cable ... 5–25
Power factor test, insulation ... 7–7
Power quality data ... 16–2
electrical ... 16–1
responsibilities ... 16–11
Priorities ... 17–2
Protective gaps ... 9–11
Push brace ... 4–50

R

Radio interference ... 4–46
Railroads, spans crossing ... 4–41
Recloser, automatic, definition ... 8–19
maintenance ... 8–19
Records, cable ... 5–31
live-line tools ... 15–18
maintenance, general ... 1–6
performance ... 2–3
protective and switching device ... 8–4
substations ... 3–3
transformers ... 7–4
wood poles ... 4–12
Regulations—see "Codes"
Regulator, constant current, description ... 6–15
loading ... 6–15
operating ... 6–15
testing ... 6–16
Regulator voltage ... 7–2
Relay contacts ... 11–5
construction ... 11–3
function ... 11–1
fundamentals ... 11–2
inspection ... 11–5
maintenance periods ... 11–4
operational checks ... 11–5
repairs ... 11–9
test equipment, laboratory ... 11–8
field ... 11–8
tests ... 11–6, 11–7
Repair, conductor ... 4–37
submarine cable ... 5–20
underground cable ... 5–1, 5–19
also see specific item
Resistance, ground electrode ... 10–1
Resistance of grounds, measurement ... 10–8
tests ... 10–8
how to reduce ... 10–9
Resistor, bypass ... 9–12
Responsibilities, maintenance ... 1–5
Rights of way, aerial ... 4–2
underground ... 5–2
Rod gaps ... 9–11
lightning ... 9–9
Rope, care of ... 15–23
splicing ... 15–24
Rot, pole ... C–5
Rubber goods ... 15–9
testing ... 15–9

Affordable Wire Management, Exhibit No. EX1010
Case No. IPR2024-00182
Page 197 of 201

Paragraphs

S

Safety, aerial-lift operations 4–66
battery 14–3
cable repair 5–3, 5–22
capacitor 13–5
circuit breaker inspection 8–12
combustible gases—see "Gases, combustible"
constant current regulator 6–15
current transformer connections 3–28
disconnecting switch 8–10
explosive gases—see "Gases, combustible"
fault locating 5–14
freedom from obstructions 4–2
grounding, maintenance 10–3
measurements 10–7
protective 15–3
provisions 10–2
handtools 15–20, 15–21, 15–22
instrument transformer 3–29
live-line maintenance, categories 4–64
general 1–13
methods 4–64
operation 4–65
manholes and vaults 5–4
manuals 1–12
overvoltage test 5–28
pole treatment 4–13, 4–23
substation 3–3, 3–17
personnel 1–12
public 1–11
surge arrester maintenance 9–8
tool handling 15–3, 15–14
toxic gases—see "Gases, toxic"
tree trimming 4–53
Sag, conductor 4–35
Security 3–4
Shielding devices, lightning 9–9
Sign warning 3–17
Silicone liquid 7–8
Sleeve—see "Splices"
Solid insulation test 7–7
Soil sterilization 4–14
Soil treatment (grounding) 10–9
Soldering 4–33
Specific gravity, batteries 14–6
Specifications 1–8
Splice and connectors for conductors, automatic tension 4–41
bolted 4–42
"bug" 4–42
clamp 4–41
compression sleeve 4–41
hot-line clamp 4–42
internally fired 4–42
soldering 4–33
split bolt connector 4–42
tap connector 4–42
Splice rope 15–24
Steel reinforcing 4–18
Storage, pole C–5
rubber goods 15–9
Straps, climber 15–14
safety 15–14
Structure, aluminum 3–11
concrete 3–13

Paragraphs

connections and joints 3–14
galvanized steel 3–9
painted steel 3–10
wood 3–12
Stub pole 4–18
Substation, buses, infrared test of 3–7
visual inspection of 3–6
fence 3–16
grounding, importance 3–2
inspection 3–5
security 3–4
signs 3–7
types covered 3–1
yards 3–18
mobile 15–26
Submarine cable, protection of 5–20
Sulfur hexifluoride 15–7
Surge arrester, definition 9–5
gapped silicon carbide 9–6
inspections 9–8
maintenance 9–8
metal oxide 9–6
tests 9–8
underground cable 5–2
Switch, disconnecting 8–9
grounding 8–9
horn gap 8–9
interrupter 8–9
maintenance, medium-voltage 8–11
primary oil 6–16
time 6–8
Switchgear 8–15, 8–16

T

Tags, cable identification 5–2
Tap changer, transformer 7–2, 7–5
Telephone interference 16–9
Terminals, air 9–9
Terminations, cable 5–24
Test—see specific test
Ties, conductor 4–46
Tools, classification 15–2
electric 15–22
hand tools 15–21
hydraulic 15–22
live-line, care 15–18
certification 15–17
cleaning 15–18
inspection 15–18
repairs 15–19
tests 15–17
pneumatic 15–22
safety 15–20, 15–21, 15–22
Towers 4–27
Toxic gases—see "Gases, toxic"
Tracer method warning 5–14
Transformer, constant current 6–14
current, definition 3–27
maintenance 3–29
safety 3–29
tests 3–30
dielectric tests 7–4
insulating liquid 7–8
solid insulation 7–7
distribution 7–4

Affordable Wire Management, Exhibit No. EX1010
Case No. IPR2024-00182
Page 198 of 201

Paragraphs
dry type 7-3
inspection, internal 7-5
instrument, connections 3-28
maintenance 3-29
safety 3-29
tests 3-30
insulating (isolating) 6-14
load test 7-4
maintenance 7-4
power 7-4
voltage (potential) 3-27
connections 3-28
maintenance 3-29
tests 3-30
Treatment, field 4-18, 4-23, 4-24
initial, maintenance 4-22
poles C-5
Treatment, wood 4-23, 4-24
Tree removal 4-59
Tree trimming, clearances 4-54
climbing space 4-54
methods of 4-57
objectives 4-53
tools 4-55
types of 4-56
wounds 4-58
Truck, aerial lift 15-25, 15-26

U

Underground equipment 5-8

V

Ventilation, manhole or vault 5-4

Paragraphs
Voltage classification, by delivery usage 4-4
by level 4-5
by originating point 4-6
terminology 4-3, 4-7
Voltage regulator 7-1, 7-2
Voltage surge, general 9-1
lightning 9-2
protection 9-4
system 9-3
Voltage transformer, definition 3-27
maintenance 3-29
safety 3-29
tests 3-30

W

Warning devices, signs 3-17
visual 15-12
Water crossings, aerial 4-3
submarine 5-2
Wood pole, inspection 4-12
life span 4-10
record keeping 4-12
supplementary data, covered C-1
reference 4-10
species C-4
Wood treatment, poles 4-23, 4-24
structures 3-12

Y

Yards, substation 3-15, 3-18

Affordable Wire Management, Exhibit No. EX1010
Case No. IPR2024-00182
Page 199 of 201

The proponent agency of this publication is the United States Army Corps of Engineers. Users are invited to send comments and suggested improvements on DA Form 2028 (Recommended Changes to Publications and Blank Forms) directly to Director, U.S. Army Center for Public Works, ATTN: CECPW-EE, 7701 Telegraph Rd., Alexandria, VA 223153862.

By Order of the Secretaries of the Army, the Navy, and the Air Force:

Official:

DENNIS J. REIMER
General, United States Army
Chief of Staff

JOEL B. HUDSON
Administrative Assistant to the
Secretary of the Army

D. J. NASH
Rear Admiral, C.E.C., United States Army
Commander, Naval Facilities
Engineering Command

BY ORDER OF THE SECRETARY OF THE AIR FORCE

EUGENE A. LUPIA, *Maj General,*
USAF, The Civil Engineer

Distribution:

Army:
To be distributed according with DA Form 12-34-E, block number 0695, requirements for nonequipment technical manuals.

Navy:
SNDL DISTRIBUTION
25 copies each: FKAlC COMNAVFACENGCOM, FKNl EFDs
10 copies each: FA46 PWCLANT, FB54 PWCPAC, FKP7 NAVSHIPYDs, FT104 PWCCNET
2 copies each: E3A LABONR, FA6 NASLANT, FA7 NAVSTALANT, FAlO SUBASELANT, FA18 NAVPHIBASELANT, FA24 COMNAVBASELANT, FB7 NASPAC FBl0 NAVSTAPAC, FB13 SUBBASEPAC, FB21 NAVPHIBASEPAC, FB28 COMNAVBASEPAC FB30 NAVSHIPREPFAC, FB36 NAVFACPAC, FB45 TRIREFFACPAC, FC3 COMNAVACTEUR, FC5 NAVSUPACTEUR, FC7 NAVSTAEUR, FC14 NASEUR, FD4 OCEANCEN, FFl COMNAVDICT Washington, DC, FF3 NAVSTACNO, FF6 NAVOBSY, FF32 FLDSUPPACT, FF38 USNA, FF42 NAVPGSCOL, FG2 NAVCOMMSTA, FH3 NAVHOSP, FJA4 NAVAL HOME, FKA8F5 SUBASE, FKM9 NSC, FKM12 NAVPETOFF, FKM13 SPCC, FKN2 CBCCS, FKN3 OICCs, FKN7 NEESA, FKNl0 NAVSUPPFAC, FKNll NAVCIVENGRLAB, FKPlB WPNSTAs, FKPlJ NAVORDSTAs FKP16 NAVSSES, FKRlA NAS,

FKRlB NAVAVNDEPOT, FKR3A NAVAIRENGCEN, FR3 NASRESFOR, FR4 NAF, FT6 NASCENT, FT9 NAVAVMUSEUM, FT13 NATTC, FT28 NETC, FT31 NTC, FT37 NAVSCOLCECOFF, FT38 NAVSUBTRACENPAC, FT39 NAWECHTRACEN, FT55 NAVSCSCOL, V3 COMCAB, V4 MCAF, V5 MCAS, V8 CG MCRD, V16 CG MCB,V23 CG MCLB

Additional copies may be obtained from:

Navy Publications and Forms Center
5801 Tabor Avenue
Philadelphia, PA 19120

Air Force: F

*U.S. G.P.O.:1996-418-285:40035