IEEE green BOOK™

142™

IEEE Recommended Practice for

Grounding of Industrial and Commercial Power Systems

Published by the
Institute of Electrical and
Electronics Engineers, Inc.

IEEE Std 142™-2007
(Revision of
IEEE Std 142-1991)

Authorized licensed use limited to: COLORADO SCHOOL OF MINES. Downloaded on October 04,2023 at 04:18:37 UTC from IEEE Xplore. Restrictions apply.

l licensed use limited to: COLORADO SCHOOL OF MINES. Downloaded on October 04,2023 at 04:18:37 UTC from IEEE Xplore. Restrictions apply.

IEEE Std 142™-2007
(Revision of
IEEE Std 142-1991)

IEEE Recommended Practice for Grounding of Industrial and Commercial Power Systems

Sponsor

Power Systems Engineering Committee
of the
IEEE Industry Applications Society

Approved 7 June 2007

IEEE-SA Standards Board

Authorized licensed use limited to: COLORADO SCHOOL OF MINES. Downloaded on October 04,2023 at 04:18:37 UTC from IEEE Xplore. Restrictions apply.

Abstract: The problems of system grounding, that is, connection to ground of neutral, of the corner of the delta, or of the midtap of one phase, are covered. The advantages and disadvantages of grounded vs. ungrounded systems are discussed. Information is given on how to ground the system, where the system should be grounded, and how to select equipment for the ground of the neutral circuits. Connecting the frames and enclosures of electric apparatus, such as motors, switchgear, transformers, buses, cables, conduits, building frames, and portable equipment, to a ground system is addressed. The fundamentals of making the interconnection of a ground conductor system between electric equipment and the ground rods, water pipes, etc., are outlined. The problems of static electricity—how it is generated, what processes may produce it, how it is measured, and what should be done to prevent its generation or to drain the static charges to earth to prevent sparking—are treated. Methods of protecting structures against the effects of lightning are also covered. Obtaining a low-resistance connection to earth, use of ground rods, connections to water pipes, etc., are discussed. A separate chapter on electronic equipment is included.
Keywords: connection to earth, electronic equipment grounding, equipment grounding, lightning protection, static protection, system grounding

---

The Institute of Electrical and Electronics Engineers, Inc.
3 Park Avenue, New York, NY 10016-5997, USA

Copyright © 2007 by the Institute of Electrical and Electronics Engineers, Inc.
All rights reserved. Published 30 November 2007. Printed in the United States of America.

IEEE is a registered trademark in the U.S. Patent & Trademark Office, owned by the Institute of Electrical and Electronics Engineers, Incorporated.

National Electrical Code and NEC are both registered trademarks in the U.S. Patent & Trademark Office, owned by the National Fire Protection Association.

National Electrical Safety Code and NESC are both registered trademarks and service marks of the Institute of Electrical and Electronics Engineers, Inc.

National Lightning Detection Network (NLDN) is a registered trademark of Vaisala, Inc.

Print: ISBN 0-7381-5639-2 SH95700
PDF: ISBN 0-7381-5640-X SS95700

No part of this publication may be reproduced in any form, in an electronic retrieval system or otherwise, without the prior written permission of the publisher.

Authorized licensed use limited to: COLORADO SCHOOL OF MINES. Downloaded on October 04,2023 at 04:18:37 UTC from IEEE Xplore. Restrictions apply.

IEEE Standards documents are developed within the IEEE Societies and the Standards Coordinating Committees of the IEEE Standards Association (IEEE-SA) Standards Board. The IEEE develops its standards through a consensus development process, approved by the American National Standards Institute, which brings together volunteers representing varied viewpoints and interests to achieve the final product. Volunteers are not necessarily members of the Institute and serve without compensation. While the IEEE administers the process and establishes rules to promote fairness in the consensus development process, the IEEE does not independently evaluate, test, or verify the accuracy of any of the information contained in its standards.

Use of an IEEE Standard is wholly voluntary. The IEEE disclaims liability for any personal injury, property or other damage, of any nature whatsoever, whether special, indirect, consequential, or compensatory, directly or indirectly resulting from the publication, use of, or reliance upon this, or any other IEEE Standard document.

The IEEE does not warrant or represent the accuracy or content of the material contained herein, and expressly disclaims any express or implied warranty, including any implied warranty of merchantability or fitness for a specific purpose, or that the use of the material contained herein is free from patent infringement. IEEE Standards documents are supplied "**AS IS**."

The existence of an IEEE Standard does not imply that there are no other ways to produce, test, measure, purchase, market, or provide other goods and services related to the scope of the IEEE Standard. Furthermore, the viewpoint expressed at the time a standard is approved and issued is subject to change brought about through developments in the state of the art and comments received from users of the standard. Every IEEE Standard is subjected to review at least every five years for revision or reaffirmation. When a document is more than five years old and has not been reaffirmed, it is reasonable to conclude that its contents, although still of some value, do not wholly reflect the present state of the art. Users are cautioned to check to determine that they have the latest edition of any IEEE Standard.

In publishing and making this document available, the IEEE is not suggesting or rendering professional or other services for, or on behalf of, any person or entity. Nor is the IEEE undertaking to perform any duty owed by any other person or entity to another. Any person utilizing this, and any other IEEE Standards document, should rely upon the advice of a competent professional in determining the exercise of reasonable care in any given circumstances.

Interpretations: Occasionally questions may arise regarding the meaning of portions of standards as they relate to specific applications. When the need for interpretations is brought to the attention of IEEE, the Institute will initiate action to prepare appropriate responses. Since IEEE Standards represent a consensus of concerned interests, it is important to ensure that any interpretation has also received the concurrence of a balance of interests. For this reason, IEEE and the members of its societies and Standards Coordinating Committees are not able to provide an instant response to interpretation requests except in those cases where the matter has previously received formal consideration. At lectures, symposia, seminars, or educational courses, an individual presenting information on IEEE standards shall make it clear that his or her views should be considered the personal views of that individual rather than the formal position, explanation, or interpretation of the IEEE.

Comments for revision of IEEE Standards are welcome from any interested party, regardless of membership affiliation with IEEE. Suggestions for changes in documents should be in the form of a proposed change of text, together with appropriate supporting comments. Comments on standards and requests for interpretations should be addressed to:

Secretary, IEEE-SA Standards Board
445 Hoes Lane
Piscataway, NJ 08854
USA

Authorization to photocopy portions of any individual standard for internal or personal use is granted by the Institute of Electrical and Electronics Engineers, Inc., provided that the appropriate fee is paid to Copyright Clearance Center. To arrange for payment of licensing fee, please contact Copyright Clearance Center, Customer Service, 222 Rosewood Drive, Danvers, MA 01923 USA; +1 978 750 8400. Permission to photocopy portions of any individual standard for educational classroom use can also be obtained through the Copyright Clearance Center.

Authorized licensed use limited to: COLORADO SCHOOL OF MINES. Downloaded on October 04,2023 at 04:18:37 UTC from IEEE Xplore. Restrictions apply.

Introduction

This introduction is not part of IEEE Std 142-2007, IEEE Recommended Practice for Grounding of Industrial and Commercial Power Systems.

This book is a revision of IEEE Std 142-1991, the *IEEE Green Book*™. This recommended practice has served electrical engineers seeking electrical system grounding information since the first edition in 1956. It reflects the experience and sound judgment of a working group made up of engineers active in the design and operation of electrical systems for industrial and commercial power systems.

Notice to users

Errata

Errata, if any, for this and all other standards can be accessed at the following URL: http://standards.ieee.org/reading/ieee/updates/errata/index.html. Users are encouraged to check this URL for errata periodically.

Interpretations

Current interpretations can be accessed at the following URL: http://standards.ieee.org/reading/ieee/interp/index.html.

Patents

Attention is called to the possibility that implementation of this standard may require use of subject matter covered by patent rights. By publication of this standard, no position is taken with respect to the existence or validity of any patent rights in connection therewith. The IEEE shall not be responsible for identifying patents or patent applications for which a license may be required to implement an IEEE standard or for conducting inquiries into the legal validity or scope of those patents that are brought to its attention.

Copyright © 2007 IEEE. All rights reserved.

Authorized licensed use limited to: COLORADO SCHOOL OF MINES. Downloaded on October 04,2023 at 04:18:37 UTC from IEEE Xplore. Restrictions apply.

Participants

At the time this standard was submitted to the IEEE-SA Standards Board for approval, the Working Group had the following membership:

Elliot Rappaport, *Chair*
Daleep C. Mohla, *Vice Chair*

Chapter 1: System grounding—**Donald W. Zipse** and **Gene Strycula,** *Co-chairs*

Chapter 2: Equipment grounding—**Elliot Rappaport,** *Chair*

Chapter 3: Static and lightning protection grounding—**Donald McCullough II** and **Donald W. Zipse,** *Co-chairs*

Chapter 4: Connection to earth—**Ken Michaels,** *Chair*

Chapter 5: Electronic equipment grounding—**Thomas Baldwin,** *Chair*

Larry Ayer
V. Basch
Baldwin Bridger
William Bush
M. Butkiewicz
Thomas M. Gruzs
M. Jerath
Don O. Koval
T. David Mills
Neil Nichols
Melvin K. Sanders
Lynn F. Saunders
Srinivasa I. Venugopaian

The following members of the individual balloting committee voted on this standard. Balloters may have voted for approval, disapproval, or abstention.

Marcos Andrade
Richard Becker
W. J. (Bill) Bergman
Thomas Blair
William Bloethe
Stuart Bouchey
Baldwin Bridger
Frederick Brockhurst
Mark Bushnell
Keith Chow
Donald Colaberardino
Stephen P. Conrad
Terry Conrad
James Daly
Stephen Dare
Guru Dutt Dhingra
Gary Di Troia
Gary Donner
Randall Dotson
Neal Dowling
Donald Dunn
Randall Groves
Thomas M. Gruzs
Paul Hamer
Robert Hoerauf
Darin Hucul
Robert Ingham
David W. Jackson
Joseph Jancauskas
Yuri Khersonsky
Robert Konnik
Don O. Koval
Saumen Kundu
Stephen R. Lambert
Blane Leuschner
Jason Lin
Michael Lowenstein
Richard Loyd
Gregory Luri
Keith Malmedal
William McCoy
Donald McCullough II
William Moylan
Michael Newman
Neil Nichols
Greg Nolan
T. W. Olsen
Gregory Olson
Lorraine Padden
Kostas Pervolarakis
Paul Pillitteri
Percy Pool
Louie Powell
Elliot Rappaport
Radhakrishna Rebbapragada
Michael Roberts
Melvin K. Sanders
Steven Sano
Robert Schuerger
Robert Seitz
Michael Shirven
H. Jin Sim

Copyright © 2007 IEEE. All rights reserved.

Authorized licensed use limited to: COLORADO SCHOOL OF MINES. Downloaded on October 04,2023 at 04:18:37 UTC from IEEE Xplore. Restrictions apply.

Dan Evans
Jay Fischer
H. Landis Floyd II
Marcel Fortin
Carl Fredericks
Edgar Galyon
Travis Griffith
Mark McGranaghan
John Merando
James Michalec
Gary Michel
T. David Mills
James Mitchem
Charles Morse
Abdul Mousa
David Smith
Robert Smith
Devendra Soni
Peter Sutherland
James Wilson
Larry Young
Donald W. Zipse

When the IEEE-SA Standards Board approved this standard on 7 June 2007, it had the following membership:

Steve M. Mills, *Chair*
Robert M. Gown, *Vice Chair*
Don Wright, *Past Chair*
Judith Gorman, *Secretary*

Richard DeBlasio
Alex Gelman
William R. Goldbach
Arnold M. Greenspan
Joanna N. Guenin
Julian Forster*
Kenneth S. Hanus
William B. Hopf
Richard H. Hulett
Hermann Koch
Joseph L. Koepfinger*
John Kulick
David J. Law
Glenn Parsons
Ronald C. Petersen
Tom A. Prevost
Narayanan Ramachandran
Greg Ratta
Robby Robson
Anne-Marie Sahazizia
Virginia C. Sulzberger
Malcolm V. Thaden
Richard L. Townsend
Howard L. Wolfman

*Member Emeritus

Also included are the following nonvoting IEEE-SA Standards Board liaisons:

Satish K. Aggarwal, *NRC Representative*
Alan H. Cookson, *NIST Representative*

Don Messina
IEEE Standards Program Manager, Document Development

Patricia A. Gerdon
IEEE Standards Program Manager, Technical Program Development

Copyright © 2007 IEEE. All rights reserved.

Authorized licensed use limited to: COLORADO SCHOOL OF MINES. Downloaded on October 04,2023 at 04:18:37 UTC from IEEE Xplore. Restrictions apply.

Contents

Chapter 1
System grounding 1
1.1 Introduction 1
1.2 Definitions 2
1.3 Purposes of system grounding 4
1.4 Methods of system neutral grounding 5
1.5 Obtaining the system neutral 22
1.6 Location of system grounding points 28
1.7 Grounding of industrial and commercial generators 38
1.8 Autotransformers 48
1.9 System grounding for uninterruptible power systems 53
1.10 Portable mining equipment supply systems 57
1.11 Creation of stray currents and potentials 60
1.12 Avoiding common-mode noise 62
1.13 Limiting transferred earth potentials 63
1.14 “Resonantly” produced voltages 64
1.15 Grounding of dc power systems 66
1.16 Normative references 70
1.17 Bibliography 73

Chapter 2
Equipment grounding 75
2.1 Basic objectives 75
2.2 Fundamental concepts 77
2.3 Equipment grounding as influenced by type of use 95
2.4 Outdoor open-frame substations 95
2.5 Unit substations 99
2.6 Installations serving heavy portable electric machinery 100
2.7 Interior wiring systems 104
2.8 Interior unit substations and switching centers 110
2.9 Utilization equipment 111
2.10 Normative references 114
2.11 Bibliography 116

Chapter 3
Static and lightning protection grounding 119
3.1 Introduction 119
3.2 Static grounding 119
3.3 Lightning protection grounding 140
3.4 Normative references 156
3.5 Bibliography 159

Copyright © 2007 IEEE. All rights reserved.

Authorized licensed use limited to: COLORADO SCHOOL OF MINES. Downloaded on October 04,2023 at 04:18:37 UTC from IEEE Xplore. Restrictions apply.

Chapter 4
Connection to earth 161
4.1 Resistance to earth 161
4.2 Ground electrodes 169
4.3 Methods and techniques of construction 174
4.4 Measurement of resistance to earth 176
4.5 Normative references 182

Chapter 5
Electronic equipment grounding 187
5.1 Introduction 187
5.2 Definitions 187
5.3 History of computer grounding 188
5.4 System or equipment to be grounded 190
5.5 Grounding electronic equipment 191
5.6 Effects of internal rectifiers in computers 200
5.7 Grounding of shields 201
5.8 Interference from radio frequencies 204
5.9 Case histories 205
5.10 Normative references 207
5.11 Bibliography 208

Index 211

 Copyright © 2007 IEEE. All rights reserved.

Authorized licensed use limited to: COLORADO SCHOOL OF MINES. Downloaded on October 04,2023 at 04:18:37 UTC from IEEE Xplore. Restrictions apply.

Affordable Wire Management, Exhibit No. EX1019
Case No. IPR2024-00182
Page 10 of 225

IEEE Recommended Practice for Grounding of Industrial and Commercial Power Systems

Chapter 1
System grounding

1.1 Introduction

1.1.1 Overview

This chapter provides recommended procedures for the system grounding of industrial and commercial power systems, and the proper selection and application of grounding impedances. Special cases of system grounding are also addressed for generators, uninterruptible power supplies (UPS), portable mining equipment, and multi-voltage systems.

1.1.2 General

Grounding of an electrical system is a decision that must be faced sometime by most engineers charged with planning or modifying electrical distribution. Grounding in some form is generally recommended, although there are certain exceptions. Several methods and criteria exist for system grounding; each has its own purpose.

It is the intention of this chapter to assist the engineer in making decisions on the subject by presenting basic reasons for grounding or not grounding and by reviewing general practices and methods of system grounding.

The practices set forth herein are primarily applicable to industrial power systems that distribute and utilize power at medium or low voltage, usually within a smaller geographical area than is covered by a utility.

Where distances or power levels may dictate circuitry and equipment similar to a utility, consideration of utility practices is warranted. However, restrictions of the National Electrical Code® (NEC®), NFPA 70[1] particular needs of service and the experience and training of the workforce should also be considered.

[1]Information on references can be found in 1.16.

Copyright © 2007 IEEE. All rights reserved.

Authorized licensed use limited to: COLORADO SCHOOL OF MINES. Downloaded on October 04,2023 at 04:18:37 UTC from IEEE Xplore. Restrictions apply.

Where an industrial power system includes power-generating equipment, the reasons for grounding these components may be the same as those for grounding similar components of public utility systems. The methods of grounding would generally be similar under like conditions of service. However, in the industrial setting, conditions of service may be altered by the following:

a) Location within the power system
b) Individual generator characteristics
c) Manufacturing process requirements

All of these may affect grounding decisions.

The NEC, sponsored by the National Fire Protection Association, contains regulations pertaining to system and equipment grounding applicable to industrial, commercial, and special occupancy facilities. These rules are considered minimum requirements for the protection of life and property and should be carefully reviewed during the course of system design. The recommended practices in this document are intended to supplement, and not negate, any of the requirements in the NEC.

1.2 Definitions

For the purposes of this document, the following terms and definitions apply. *The Authoritative Dictionary of IEEE Standards Terms* [B8][2] and the NEC should be referenced for terms not defined in this subclause.

1.2.1 effectively grounded: Grounded through a sufficiently low impedance such that for all system conditions the ratio of zero-sequence reactance to positive-sequence reactance (X_0/X_1) is positive and not greater than 3, and the ratio of zero-sequence resistance to positive-sequence reactance (R_0/X_1) is positive and not greater than 1.

1.2.2 equipment grounding conductor (EGC): The conductor used to connect the non-current-carrying metal parts of the equipment, raceways, and other enclosures to the system grounded conductor, the grounding electrode conductor (GEC), or both, at the service equipment or at the source of a separately derived system.

1.2.3 ground: A conducting connection, whether intentional or accidental, between an electrical circuit or equipment and the earth, or to some other body that serves in place of the earth.

1.2.4 grounded: Connected to earth or to an extended conducting body that serves instead of the earth, whether the connection is intentional or accidental.

1.2.5 grounded system: A system in which at least one conductor or point (usually the middle wire or neutral point of transformer or generator windings) is intentionally grounded, either solidly or through an impedance.

[2]The numbers in brackets correspond to those of the bibliography in 1.17.

 Copyright © 2007 IEEE. All rights reserved.

Authorized licensed use limited to: COLORADO SCHOOL OF MINES. Downloaded on October 04,2023 at 04:18:37 UTC from IEEE Xplore. Restrictions apply.

1.2.6 grounding system: A system that consists of all interconnected grounding connections in a specific power system and is defined by its isolation from adjacent grounding systems. The isolation is provided by transformer primary and secondary windings that are coupled only by magnetic means. Thus, the system boundary is defined by the lack of a physical connection that is either metallic or through a significantly high impedance.

1.2.7 high-resistance grounded: A resistance-grounded system designed to limit ground-fault current to a value that can be allowed to flow for an extended period of time, while still meeting the criteria of $R_0 < X_{co,}$ so that transient voltages from arcing ground faults are reduced. The ground-fault current is usually limited to less than 10 A, resulting in limited damage even during prolonged faults.

1.2.8 low-resistance grounded: A resistance-grounded system that permits a higher ground-fault current to flow to obtain sufficient current for selective relay operation. Usually meets the criteria of R_0/X_0 less than or equal to 2. Ground-fault current is typically between 100 A and 1000 A.

1.2.9 per-phase charging current (I_{co}): The current (V_{ln}/X_{co}) that passes through one phase of the system to charge the distributed capacitance per phase-to-ground of the system; V_{ln} is the line-to-neutral voltage and X_{co} is the per-phase distributed capacitive reactance of the system.

1.2.10 reactance grounded: Grounded through an impedance, the principal element of which is inductive reactance.

1.2.11 resistance grounded: Grounded through an impedance, the principal element of which is resistance.

1.2.12 resonant grounded: A system in which the capacitive charging current is neutralized by an inductive current produced from a reactor connected between the system neutral and ground. By properly "tuning" the reactor (selecting the right tap), a low magnitude of fault current can be achieved. In general, when this occurs the arc will not maintain itself and the ground fault is extinguished or "quenched." In a parallel circuit, consisting of L and C, this happens when,

$$\omega L = \frac{1}{\omega C} \quad \text{or} \quad f = \frac{1}{2\pi\sqrt{LC}}$$

1.2.13 R_n: The value of the resistance connected from the neutral to the ground of a resistance-grounded system. For high-resistance grounded systems where R_n is a major component of R_0, the relationship $R_0 = 3R_n$ applies.

1.2.14 R_0: The per-phase zero-sequence resistance of the system.

1.2.15 separately derived system: A wiring system whose power is derived from a generator, transformer, or converter windings and has no direct electrical connection,

Copyright © 2007 IEEE. All rights reserved.

Authorized licensed use limited to: COLORADO SCHOOL OF MINES. Downloaded on October 04,2023 at 04:18:37 UTC from IEEE Xplore. Restrictions apply.

including a solidly connected grounded circuit conductor, to supply conductors originating in another system.

1.2.16 solidly grounded: Connected directly through an adequate ground connection in which no impedance has been intentionally inserted.

1.2.17 static charge: The electricity generated when two dissimilar substances come into contact. Conveyor belts are active producers of static electricity.

1.2.18 switching surge: A transient wave of overvoltage in an electric circuit caused by the operation of a switching device interrupting current.

1.2.19 system charging current: The total distributed capacitive charging current ($3V_{ln}/X_{co}$) of a three-phase system.

1.2.20 three-phase, four-wire system: A system of alternating current supply comprising four conductors, three of which are connected as in a three-phase three-wire system, the fourth being connected to the neutral point of the supply or midpoint of one phase in case of delta-connected transformer secondary for the purpose of conducting load current.

1.2.21 three-phase, three-wire system: A system of alternating current supply comprising three conductors, between successive pairs of which are maintained alternating differences of potential successively displaced in phase by one third of a period.

1.2.22 transient overvoltage: The temporary overvoltage associated with the operation of a switching device, a fault, a lightning stroke, an arcing ground fault on an ungrounded system, or other instigating events.

1.2.23 ungrounded system: A system without an intentional connection to ground except through potential indicating or measuring devices or other very high-impedance devices.

1.2.24 X_{co}: The distributed per-phase capacitive reactance to ground of the system.

1.2.25 X_0: Zero-sequence reactance of the system.

1.2.26 X_1: Positive-sequence reactance of the system.

1.2.27 X_2: Negative-sequence reactance of the system.

1.3 Purposes of system grounding

System grounding is the intentional connection to ground of a phase or neutral conductor for the purpose of:

a) Controlling the voltage with respect to earth, or ground, within predictable limits, and

 Copyright © 2007 IEEE. All rights reserved.

Authorized licensed use limited to: COLORADO SCHOOL OF MINES. Downloaded on October 04,2023 at 04:18:37 UTC from IEEE Xplore. Restrictions apply.

b) Providing for a flow of current that will allow detection of an unwanted connection between system conductors and ground. Such detection may then initiate operation of automatic devices to remove the source of voltage from these conductors.

The NEC prescribes certain system grounding connections that must be made to be in compliance with the code. The control of voltage to ground limits the voltage stress on the insulation of conductors so that insulation performance can more readily be predicted. The control of voltage also allows reduction of shock hazard to persons who might come in contact with live conductors.

1.4 Methods of system neutral grounding

1.4.1 Introduction

Most grounded systems employ some method of grounding the system neutral at one or more points. These methods can be divided into two general categories: *solid grounding* and *impedance grounding*. Impedance grounding may be further divided into several subcategories: reactance grounding, resistance grounding, and *ground-fault neutralizer grounding*. Figure 1-1 shows examples of these methods of grounding.

Each method, as named, refers to the nature of the external circuit from system neutral to ground rather than to the degree of grounding. In each case the impedance of the generator or transformer whose neutral is grounded is in series with the external circuit. Thus a solidly grounded generator or transformer may or may not furnish effective grounding to the system, depending on the system source impedance.

Many of the concepts involved in defining system grounding types and levels are best explained in terms of symmetrical components or equivalent circuits. The reader who is not familiar with these analytical methods is referred to Chapter 2 of Beeman and to Chapter 3 of IEEE Std 399™ (*IEEE Brown Book*™) for guidance.

Molded-case circuit-breaker interrupting capabilities can be affected by the method of grounding. In addition, if other than solidly grounded wye systems are used, the circuit breakers' single-pole interrupting ratings should be evaluated for the application

1.4.2 Ungrounded system (no intentional grounding)

In an ungrounded system, there is no intentional connection between the system conductors and ground. However, as shown in Figure 1-2, there always exists a capacitive coupling between one system conductor and another, and also between system conductors and ground. Consequently, the so-called *ungrounded* system is in reality a *capacitance* grounded system, by virtue of the distributed capacitance from the system conductors to ground. Since the capacitance between phases has little effect on the grounding characteristics of the system, it will be disregarded. For simplicity, the distributed capacitive reactance to ground, X_{co}, is assumed to be balanced.

Copyright © 2007 IEEE. All rights reserved.

Authorized licensed use limited to: COLORADO SCHOOL OF MINES. Downloaded on October 04,2023 at 04:18:37 UTC from IEEE Xplore. Restrictions apply.

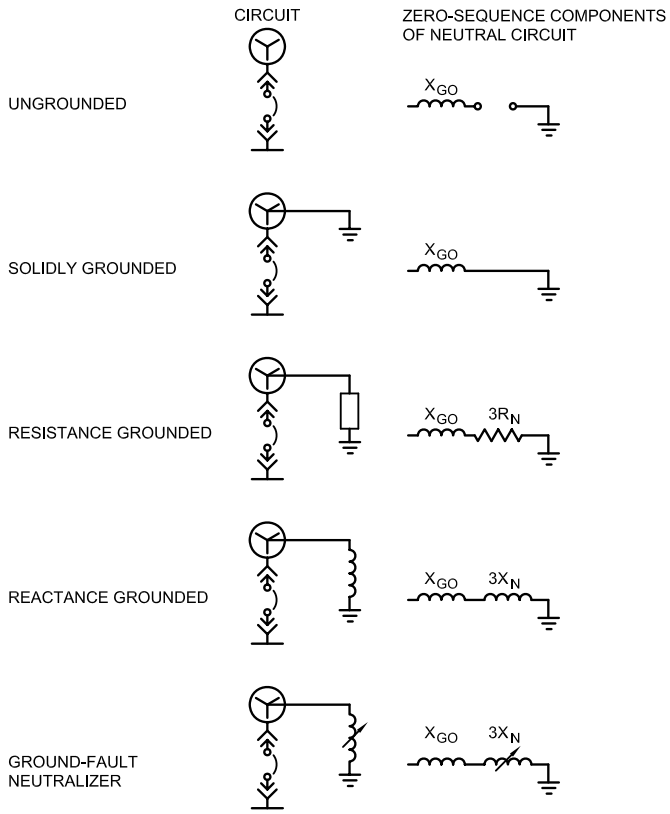

X_{GO} = Zero-sequence reactance of generator or transformer
X_N = Reactance of grounding reactor
R_N = Resistance of grounding resistor

Figure 1-1—System neutral circuit and equivalent diagrams for ungrounded and grounded systems

In an unfaulted condition, with balanced three-phase voltages applied to the lines, the capacitive charging current, I_{co}, in phase will be equal and displaced 120° from one another. The phase voltages to ground will also be equal and displaced 120° from one another. The vectors relationships are shown in part b) of Figure 1-2. Since the neutral of the distributed capacitances is at earth potential, it follows that the neutral of the transformer is also at earth potential, being held there by the capacitance to ground.

If one of the system conductors, phase C for example, faults to ground, current flow through that capacitance to ground will cease, since no potential difference across it now exists. The voltage across the remaining two distributed capacitors to ground will, however, increase from line to neutral to line to line. The capacitive charging current, I_{co},

 Copyright © 2007 IEEE. All rights reserved.

Authorized licensed use limited to: COLORADO SCHOOL OF MINES. Downloaded on October 04,2023 at 04:18:37 UTC from IEEE Xplore. Restrictions apply.
Affordable Wire Management, Exhibit No. EX1019
Case No. IPR2024-00182
Page 16 of 225

in the two unfaulted phases will therefore increase by the square root of 3. As shown in Figure 1-3, the line-to-ground voltages are no longer 120°, but 60° apart.

Hence, the vectorial sum of the capacitive charging current to ground is no longer zero, but is 3 I_{co} or three times the original charging current per phase. The fault current, I_g, flowing from the faulted conductor to ground, leads the original line-to-neutral voltage ($V_{nc} = -V_{cn}$) by approximately 90°.

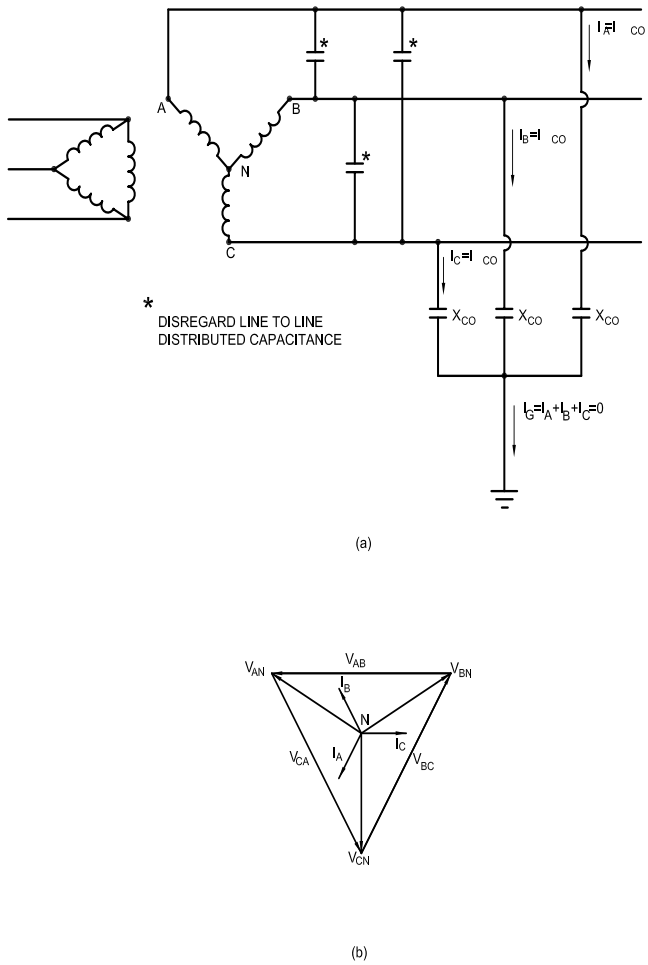

Figure 1-2—Ungrounded system: (a) circuit configuration, (b) vector diagram

In an ungrounded system, it is possible for destructive transient overvoltages to occur throughout the system during restriking ground faults. These overvoltages, which can be several times normal in magnitude, result from a resonant condition being established between the inductive reactance of the system and the distributed capacitance to ground. This phenomenon is discussed in detail by Beeman. Experience has proved that these

Copyright © 2007 IEEE. All rights reserved.

Authorized licensed use limited to: COLORADO SCHOOL OF MINES. Downloaded on October 04,2023 at 04:18:37 UTC from IEEE Xplore. Restrictions apply.
Affordable Wire Management, Exhibit No. EX1019
Case No. IPR2024-00182
Page 17 of 225

overvoltages may cause failure of insulation at multiple locations in the system, particularly at motors. Transient overvoltages from restriking ground faults are the main reason why ungrounded systems are no longer recommended and grounded systems of some form are the predominant choice. To reduce transient overvoltages during restriking ground faults, one should ground the system using either solid or impedance grounding as indicated in Figure 1-4.

Various detection schemes are used to detect the presence of a single line-to-ground fault. The simplest scheme employs three light bulbs, each connected between line voltage and ground. Under normal operation the three bulbs are illuminated with low equal intensity. When a single line-to-ground fault occurs, that bulb connected to the faulted phase is extinguished. The remaining two bulbs increase in intensity, since the voltage on the unfaulted phases increases from line-to-neural to line-to-line.

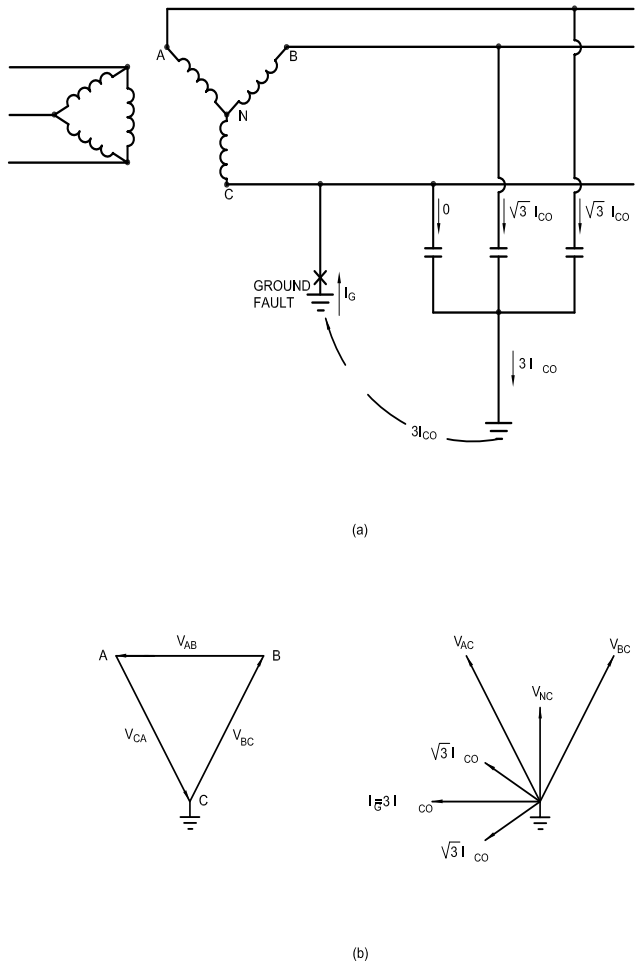

Figure 1-3—Single line-to-ground fault on an ungrounded system: (a) circuit configuration, (b) vector diagram

 Copyright © 2007 IEEE. All rights reserved.

Authorized licensed use limited to: COLORADO SCHOOL OF MINES. Downloaded on October 04,2023 at 04:18:37 UTC from IEEE Xplore. Restrictions apply.

Affordable Wire Management, Exhibit No. EX1019
Case No. IPR2024-00182
Page 18 of 225

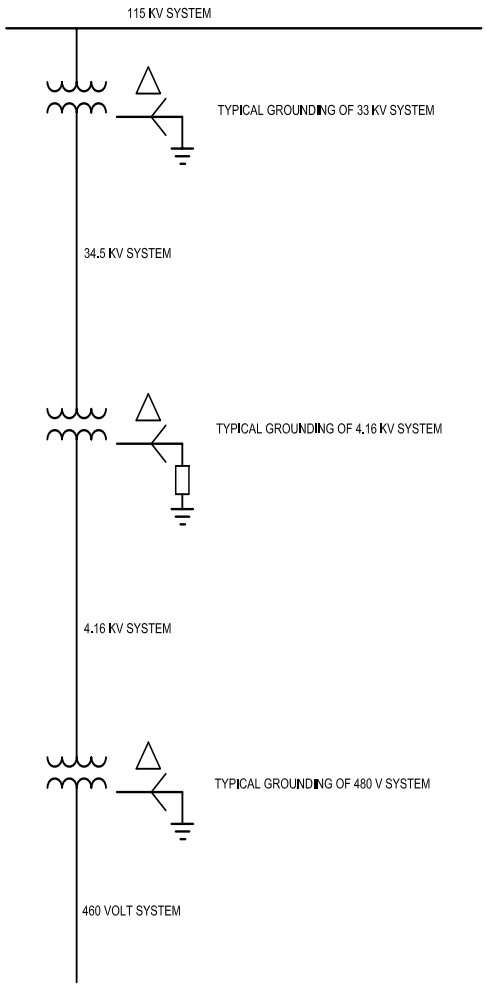

Figure 1-4—Independent grounding of each voltage level

Another scheme frequently used takes the form of three voltage transformers with their primary windings connected in wye and the neutral point grounded. The secondary windings of the transformers are connected in broken delta, with a voltage relay connected in the open corner and used to operate an indication or alarm circuit. Using this scheme, loading resistors may be required either in the primary neutral or secondary circuit to avoid ferroresonance.

The problem of locating a single line-to-ground fault on an ungrounded system can be time consuming. Usually, the first step is to open the secondary feeders, one at a time, to determine on which feeder the fault is located. Afterwards, the branch circuits are opened one at a time. Finally, the individual loads are taken off. None of these procedures improves service continuity.

Copyright © 2007 IEEE. All rights reserved.

Authorized licensed use limited to: COLORADO SCHOOL OF MINES. Downloaded on October 04,2023 at 04:18:37 UTC from IEEE Xplore. Restrictions apply.
Affordable Wire Management, Exhibit No. EX1019
Case No. IPR2024-00182
Page 19 of 225

If a ground cannot be located before a second line-to-ground fault occurs, whose current must be carried by the EGC or earth, the result will be a line-to-line fault. This will be contrasted later to a grounded system that develops enough ground current to clear, automatically and selectively, each faulted circuit.

1.4.3 Resistance grounding

In a resistance-grounded system, the neutral of the transformer or generator is connected to ground through a resistor. A typical resistance-grounded neutral system is shown in Figure 1-5. As commonly installed, the resistance has a considerably higher ohmic magnitude than the system reactance at the resistor location. Consequently, the line-to-ground fault current is primarily limited by the resistor itself.

The reasons for limiting the current by resistance grounding include the following:

a) To reduce burning and melting effects in faulted electric equipment, such as switchgear, transformers, cables, and rotating machines.

b) To reduce mechanical stresses in circuits and apparatus carrying fault currents.

c) To reduce electric-shock hazards to personnel caused by stray ground-fault currents in the ground-return path.

d) To reduce the arc blast or flash hazard to personnel who may have accidentally caused or happen to be in close proximity to the ground fault.

e) To reduce the momentary line-voltage dip occasioned by the occurrence and clearing of a ground fault.

f) To secure control of transient overvoltages while at the same time avoiding the shutdown of a faulted circuit on the occurrence of the first ground fault (high-resistance grounding).

Resistance grounding may be either of two classes, high resistance or low resistance, distinguished by the magnitude of ground-fault current permitted to flow. Although there are no recognized standards for the levels of ground-fault current that define these two classes, in practice there is a clear difference.

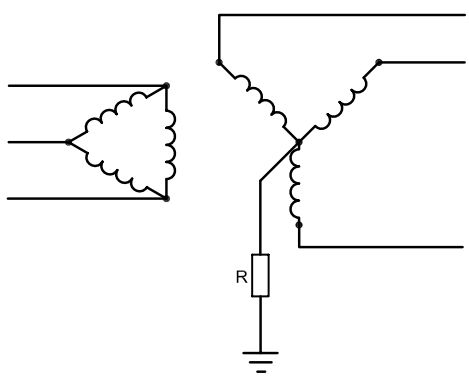

Figure 1-5—Resistance-grounded system

 Copyright © 2007 IEEE. All rights reserved.

Authorized licensed use limited to: COLORADO SCHOOL OF MINES. Downloaded on October 04,2023 at 04:18:37 UTC from IEEE Xplore. Restrictions apply.

1.4.3.1 High-resistance grounding

High-resistance grounding employs a neutral resistor of high ohmic value. The value of the resistor is selected to limit the current, I_r, to a magnitude equal to or slightly greater than the total capacitance charging current, 3 I_{co}, as shown in Figure 1-6.

Typically, the ground-fault current, I_g, is limited to 10 A or less, although some specialized systems at voltages in the 15 kV class may require higher ground-fault levels. In general, the use of high-resistance grounding on systems where the line-to-ground fault exceeds 10 A should be avoided because of the potential damage caused by an arcing current larger than 10 A in a confined space (see Foster, Brown, and Pryor).

Several references are available that give typical system charging currents for major items in the electrical system (see *Electrical Transmission and Distribution Reference Book;* Baker). These will allow the value of the neutral resistor to be estimated in the project design stage. The actual system charging current may be measured prior to connection of the high-resistance grounding equipment following the manufacturer's recommended procedures.

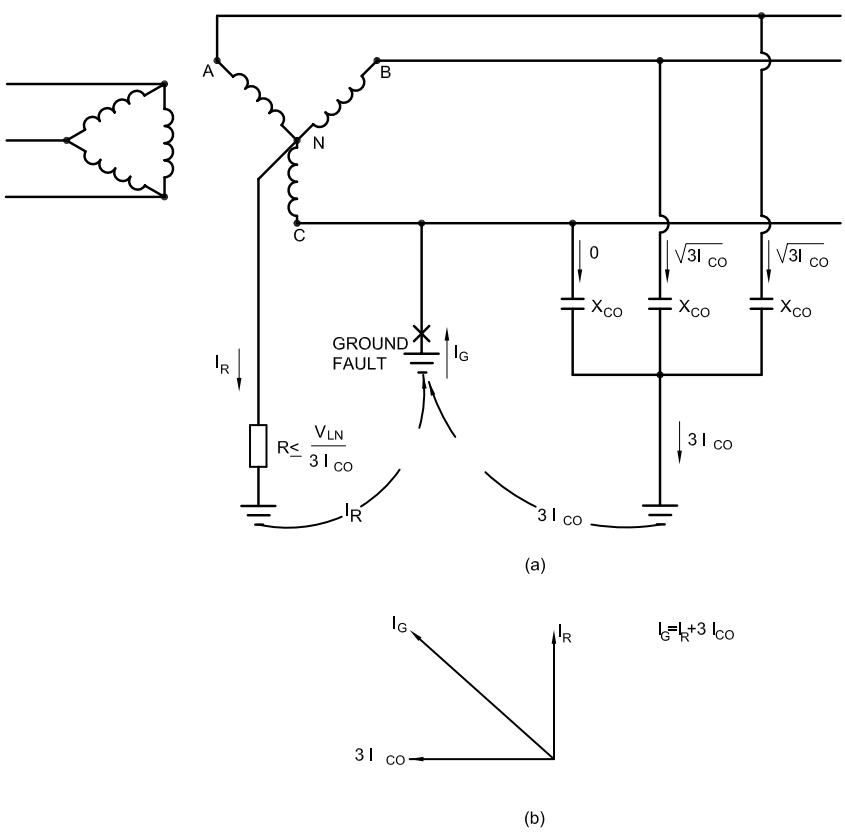

Figure 1-6—Single line-to-ground fault on a high-resistance grounded system: (a) circuit configuration, (b) vector diagram

Copyright © 2007 IEEE. All rights reserved.

Authorized licensed use limited to: COLORADO SCHOOL OF MINES. Downloaded on October 04,2023 at 04:18:37 UTC from IEEE Xplore. Restrictions apply.
Affordable Wire Management, Exhibit No. EX1019
Case No. IPR2024-00182
Page 21 of 225

High-resistance grounding usually does not require immediate clearing of a ground fault since the fault current is limited to a very low level. The protective scheme associated with high-resistance grounding is usually detection and alarm rather than immediate trip out.

A typical scheme for detecting a ground fault in a high-resistance grounded system is shown in Figure 1-7. Under normal operation, the neutral point of the transformer is at zero potential. When a single line-to-ground fault occurs, the neutral point is raised to approximately line-to-neutral voltage. This rise in voltage is then detected using an overvoltage relay, 59. A step-down transformer is typically used to reduce the line to neutral voltage of the system to a level (usually 120 V) acceptable to the relay. Since a ground fault may persist for an indefinite length of time, a continuous (rather than short term) rating should be imposed on the grounding resistor.

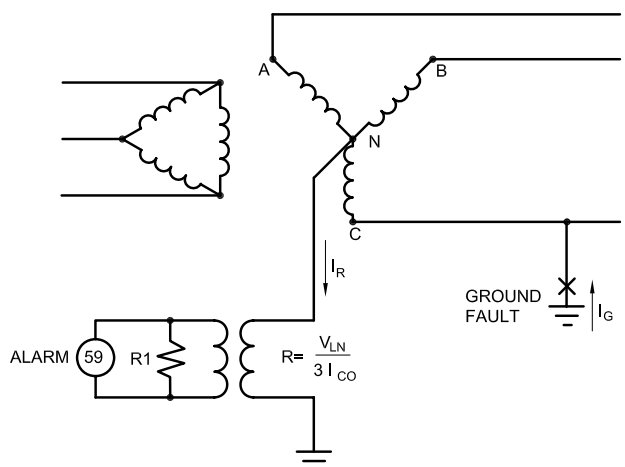

Figure 1-7—Scheme for detecting a ground fault on a high-resistance grounded system

High-resistance grounding has the following advantages:

a) Service continuity is maintained. The first ground fault does not require process equipment to be shut down.

b) Transient overvoltage due to restriking ground faults is reduced (to 250% of normal).

c) A signal tracing or pulse system will facilitate locating a ground fault.

d) It eliminates flash hazards to personnel associated with high ground-fault currents.

e) The need for and expense of coordinated ground-fault relaying is eliminated.

High-resistance grounding is generally employed in the following:

1) Low voltage (where permitted), i.e., commercial and industrial locations where there are no line-to-neutral loads.

 Copyright © 2007 IEEE. All rights reserved.

Authorized licensed use limited to: COLORADO SCHOOL OF MINES. Downloaded on October 04,2023 at 04:18:37 UTC from IEEE Xplore. Restrictions apply.

2) Medium-voltage systems where service continuity is desired and capacitive charging current is not excessive.

3) Retrofits of previously ungrounded systems where it is desired to reduce transient overvoltages potentially caused by restriking ground faults.

1.4.3.2 Low-resistance grounding

Low-resistance grounding is designed to limit ground-fault current to a range between 100 A and 1000 A, with 400 A being typical. The neutral resistor, R, shown in Figure 1-8, is selected according to $R = V_{ln}/I_g$, where V_{ln} is the system line to neutral voltage and I_g is the desired ground-fault current. Figure 1-9 illustrates the flow of currents for a single line-to-ground fault on a low-resistance grounded system. Since the combined effects of charging current and system source impedance will affect the ground-current value less than 0.5% in the typical range of utility supplied systems, it is permissible to ignore these effects in calculating the ground-fault resistance value. The general practice is to consider that the full system line-to-neutral voltage appears across the grounding resistor. Only in the case of systems supplied by small generators should departure from this general practice be considered.

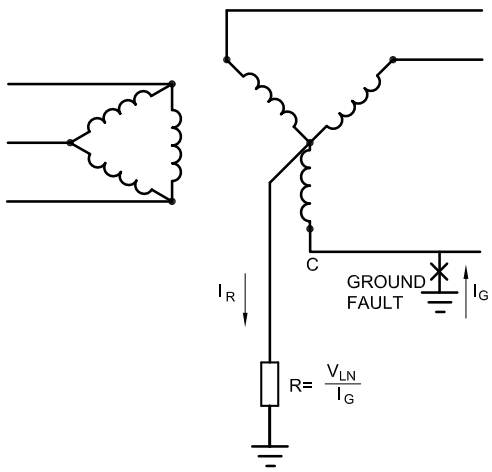

Figure 1-8—Low-resistance grounded system

Low-resistance grounding has the advantage of facilitating the immediate and selective clearing of a grounded circuit. This requires that the minimum ground-fault current be large enough to positively actuate the applied ground-fault relay. One method of detecting the presence of a ground fault uses an overcurrent relay, 51G. This method is presented in Figure 1-10. When a ground fault occurs, the neutral potential is raised to approximately line-to-neutral voltage, resulting in current flow through the resistor. A typical turns ratio for the current transformer is indicated. Upon indication that a ground fault has occurred, action would be initiated to disconnect the transformer from the secondary circuit.

Copyright © 2007 IEEE. All rights reserved.

Authorized licensed use limited to: COLORADO SCHOOL OF MINES. Downloaded on October 04,2023 at 04:18:37 UTC from IEEE Xplore. Restrictions apply.
Affordable Wire Management, Exhibit No. EX1019
Case No. IPR2024-00182
Page 23 of 225

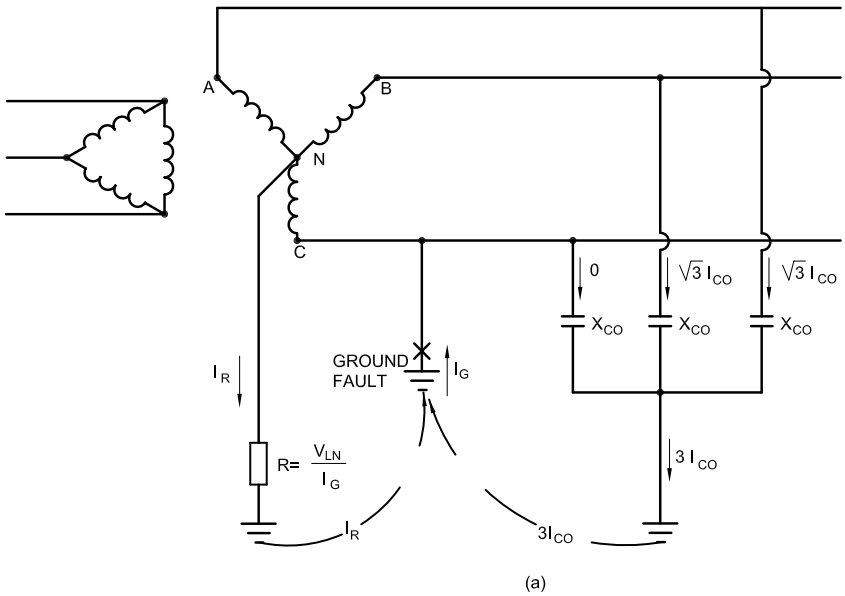

Figure 1-9—Single line-to-ground fault on a low-resistance grounded system

Since it is the intent that the ground-fault current supplied by low-resistance grounding be promptly and automatically cleared by protective relaying, the grounding resistor can be rated for intermittent duty. Normal practice is to rate it for 10 s or 30 s, depending upon the degree of security appropriate for the application. In cases of faults that are not, or cannot be, disconnected by secondary breakers, the ability for prompt and automatic disconnection of the primary source is required. Suitable relaying and switching devices for this purpose are an integral part of the low-resistance system design as shown in Figure 1-10.

Low-resistance grounding finds application in medium-voltage systems of 15 kV and below, particularly where large rotating machinery is used. By limiting ground-fault currents to hundreds of amperes, instead of thousands of amperes, damage to expensive equipment is reduced. A special application of low-resistance grounding is also mandated in mining systems supplying portable equipment trailing cables (see 1.11).

Both high- and low-resistance grounding are designed to limit transient overvoltages to safer limits (250% of normal).

Systems grounded through resistors require surge arresters suitable for use on ungrounded neutral circuits. Metal-oxide surge arrester ratings must be chosen so that neither the maximum continuous operating voltage capability nor the one-second temporary overvoltage capability is exceeded under system ground-fault conditions.

 Copyright © 2007 IEEE. All rights reserved.

Authorized licensed use limited to: COLORADO SCHOOL OF MINES. Downloaded on October 04,2023 at 04:18:37 UTC from IEEE Xplore. Restrictions apply.

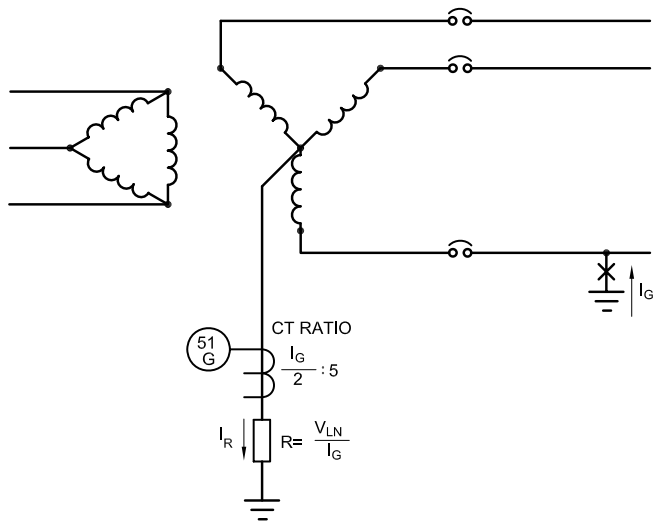

Figure 1-10—Scheme for detecting a ground fault on a low-resistance grounded system

1.4.4 Reactance grounding

The term *reactance grounding* describes the case in which a reactor is connected between the system neutral and ground, as shown in Figure 1-11. Since the ground fault that may flow in a reactance-grounded system is a function of the neutral reactance, the magnitude of the ground-fault current is often used as a criterion for describing the degree of grounding. In a reactance-grounded system, the available ground-fault current should be at least 25% ($X_0 = 10X_1$) and preferably 60% ($X_0 = 3X_1$) of the three-phase fault current to prevent serious transient overvoltages. The term X_0, as used, is the sum of the source zero-sequence reactance, X_0, plus three times the grounding reactance, $3X_n$, ($X_0 = X_{0\ source} + 3X_n$). This is considerably higher than the level of fault current desirable in a resistance-grounded system, and therefore reactance grounding is usually not considered an alternative to low-resistance grounding.

Reactance grounding is typically reserved for applications where there is a desire to limit the ground-fault duty to a magnitude that is relatively close to the magnitude of a three-phase fault. Use of neutral grounding reactors to provide this fault limitation will often be found to be a less expensive application than use of grounding resistors if the desired current magnitude is several thousand amperes.

These circumstances may arise in one of two possible instances. One potential setting is where a large substation feeds a medium-voltage distribution system, and the total zero-sequence impedance of the step-down transformers in the station causes the single-line-to-ground-fault current to greatly exceed the magnitude of a three-phase fault, and ground-fault limitation is desired to keep the total fault current within the reasonable limits. These conditions tend to occur most often in electric utility distribution practice.

Copyright © 2007 IEEE. All rights reserved.

Authorized licensed use limited to: COLORADO SCHOOL OF MINES. Downloaded on October 04,2023 at 04:18:37 UTC from IEEE Xplore. Restrictions apply.

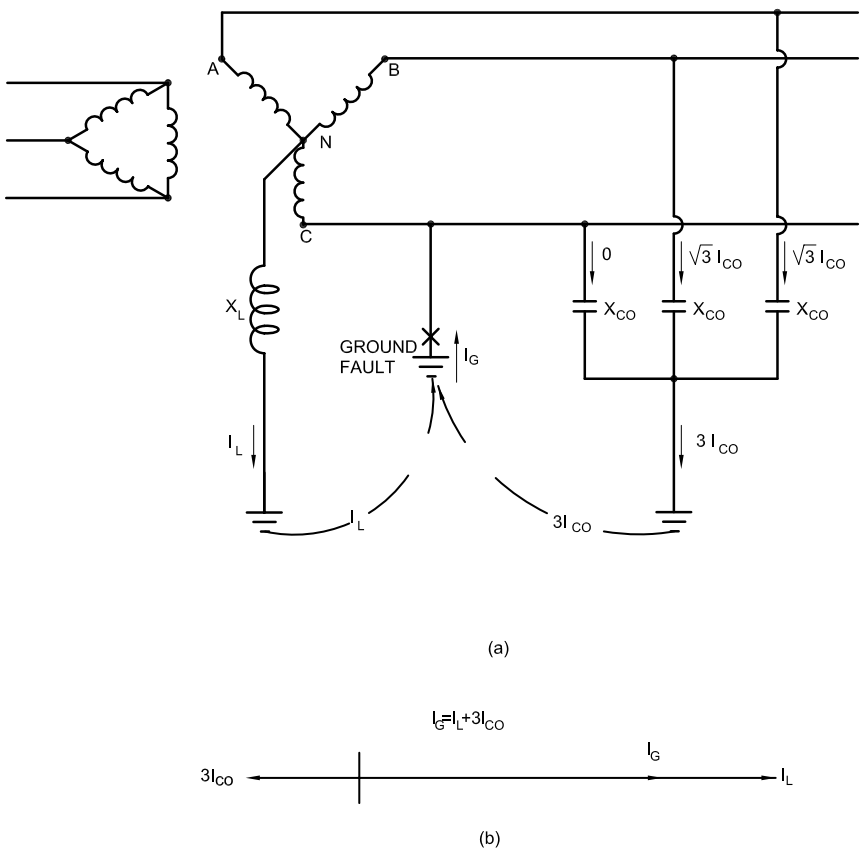

Figure 1-11—Single line-to-ground fault on a low reactance grounded system: (a) circuit configuration, (b) vector diagram

The second instance is where there is a desire to serve single-line-to-neutral-connected load directly at the terminal voltage of generators, i.e., without an intervening generator isolation transformer. In this instance, a current will flow in the generator neutral as a result of unbalance between the loads on the three phases. A resistor in the neutral circuit of the generator will limit the flow of this unbalance, thereby limiting the ability of the system to carry unbalanced single-phase load. Medium-voltage generators are typically not designed to withstand the unbalanced mechanical forces associated with supplying ground-fault currents that exceed the magnitude of current that the machine would produce to a three-phase fault at its terminals, thereby making solid grounding of the neutral undesirable. Use of low-reactance grounding to limit the ground-fault magnitude to a level slightly lower than the three-phase level is a way to resolve these application constraints. The conditions that favor low-reactance grounding of generators are relatively rare, so this practice is somewhat obscure.

 Copyright © 2007 IEEE. All rights reserved.

Authorized licensed use limited to: COLORADO SCHOOL OF MINES. Downloaded on October 04,2023 at 04:18:37 UTC from IEEE Xplore. Restrictions apply.
Affordable Wire Management, Exhibit No. EX1019
Case No. IPR2024-00182
Page 26 of 225

1.4.5 Resonant grounding (ground-fault neutralizer)

A ground-fault neutralizer is a reactor connected between the neutral of a system and ground. The reactor, X_l, is specially selected, or *tuned*, to resonate with the distributed capacitance, X_{co} of the system so that a resulting ground-fault current is resistive and low in magnitude. A resistance, *r*, is shown depicting reactor losses. The resulting ground-fault current is in phase with the line to neutral voltage so that current zero and voltage zero occur simultaneously. If the ground fault is in air, such as an insulator flashover, it may be self-extinguishing.

Operation of a ground-fault neutralizer is explained with reference to Figure 1-12. The distributed capacitance per phase is assumed to be balanced. When one phase of the system is grounded (assume phase C) a line-to-neutral voltage, $V_{cn,}$ is impressed across the reactor. This produces a lagging inductive current, $I_{l,}$ that flows from the neutralizer through the transformer, to the fault, then to the ground. At the same time a leading capacitive current, 3 I_{co}, flows from the two unfaulted lines through the capacitance to ground and to the fault. The lagging current from the inductor and the leading current from the distributed capacitance are practically 180° out of phase. By properly tuning the reactor (selecting the right tap), the inductive and capacitive components of current can be made to neutralize each other, leaving only a relatively small component of resistive current, I_r, to flow in the fault.

This method of grounding formerly was occasionally seen in high-voltage transmission practice. Today, it is rarely encountered in North America. There are a few instances in which it has been applied for generator grounding in large central stations, especially in the New England area. However, it is relatively common in electric utility distribution practice in the UK and Europe. A key requirement is that because the resonant circuit must be retuned if the distributed parameters of the associated circuit are changed, the ideal application is one that does not involve frequent circuit switching or reconfiguration.

1.4.6 Solid grounding

Solid grounding refers to the connection of a system conductor, usually the neutral of a generator, power transformer, or grounding transformer directly to ground, without any intentional intervening impedance. However, both the impedance of the source and the unintentional impedance in the connection to ground must be considered when evaluating the grounding. Two examples of solidly grounded systems are shown in Figure 1-13.

Copyright © 2007 IEEE. All rights reserved.

Authorized licensed use limited to: COLORADO SCHOOL OF MINES. Downloaded on October 04,2023 at 04:18:37 UTC from IEEE Xplore. Restrictions apply.
Affordable Wire Management, Exhibit No. EX1019
Case No. IPR2024-00182
Page 27 of 225

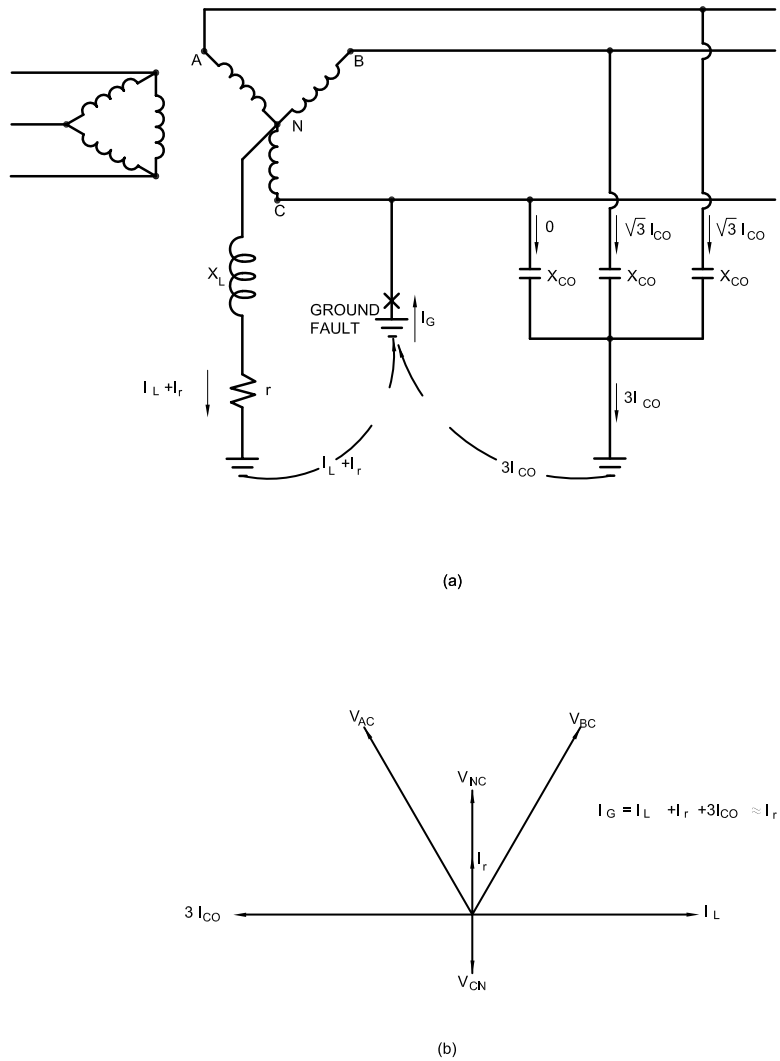

Figure 1-12—Single line-to-ground fault on a resonant grounded system: (a) circuit configuration, (b) vector diagram

To assess the benefits of a solid connection to ground, it is necessary to determine the degree of grounding provided in the system. A good guide in answering this question is the magnitude of ground-fault current as compared to the system three-phase fault current. The higher the ground-fault current in relation to the three-phase fault current, the greater the degree of grounding in the system. Effectively grounded systems will have a line-to-ground short-circuit current of at least 60% of the three-phase, short-circuit value. In terms of resistance and reactance, effective grounding of a system is accomplished only when $R_0 <= X_1$ and $X_0 <= 3X_1$ and such relationships exist at all points in the system. The X_1 component used in the above relation is the Thevenin equivalent positive-sequence

 Copyright © 2007 IEEE. All rights reserved.

Authorized licensed use limited to: COLORADO SCHOOL OF MINES. Downloaded on October 04,2023 at 04:18:37 UTC from IEEE Xplore. Restrictions apply.
Affordable Wire Management, Exhibit No. EX1019
Case No. IPR2024-00182
Page 28 of 225

reactance of the complete system including the subtransient reactance of all rotating machines. The R_0 component is primarily three times the resistance of the connection to ground.

Because the reactance of a solidly grounded generator or transformer is in series with the neutral circuit (see Figure 1-1), a solid connection does not provide a zero impedance circuit. If the reactance of the system zero-sequence circuit is too great with respect to the system positive-sequence reactance, the objectives sought in grounding, principally freedom from transient overvoltages, may not be achieved. If R_0 is too high it may not create transient voltages, but it may also not provide desired suppression of voltage to ground on the unfaulted phases.

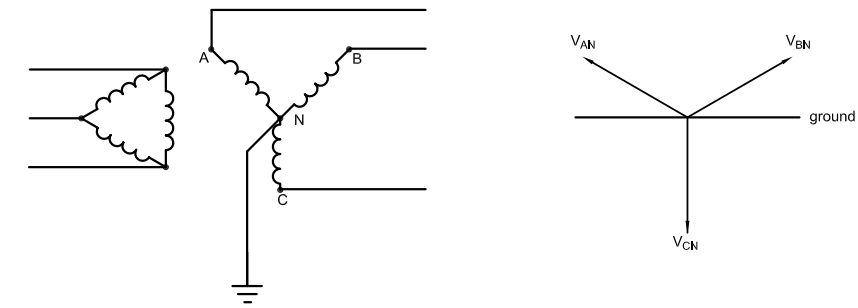

(a)

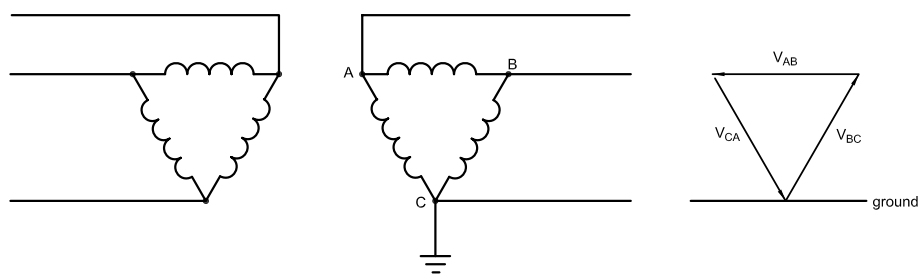

(b)

Figure 1-13—Solidly grounded systems: (a) grounded wye, (b) corner grounded delta

Copyright © 2007 IEEE. All rights reserved.

Authorized licensed use limited to: COLORADO SCHOOL OF MINES. Downloaded on October 04,2023 at 04:18:37 UTC from IEEE Xplore. Restrictions apply.
Affordable Wire Management, Exhibit No. EX1019
Case No. IPR2024-00182
Page 29 of 225

This is rarely a problem in typical industrial and commercial power systems. A sufficiently low resistance to earth may be difficult to achieve, but the "ground" to which faults occur will be the bonded conductive electrical enclosures. The zero-sequence impedance of most generators used in these systems is much lower than the positive-sequence impedance of these generators. The zero-sequence impedance of a delta-wye transformer will not exceed the transformer's positive-sequence impedance. There are, however, conditions under which relatively high zero-sequence impedance may occur.

One of these conditions is a power system fed by several generators and/or transformers in parallel. If the neutral of only one source is grounded, it is possible for the zero-sequence impedance of the grounded source to exceed the effective positive-sequence impedance of the several sources in parallel.

Another such condition may occur where power is distributed to remote facilities by an overhead line without a metallic ground-return path. In this case, the return path for ground-fault current is through the earth, and even though both the neutral of the source and the non-conducting parts at the load may be grounded with well-made electrodes, the ground-return path includes the impedance of both of these ground electrodes. This impedance may be significant. Another significant source of zero-sequence impedance is the large line-to-ground spacing of the overhead line.

Solid grounding is generally recommended for the following:

a) Low-voltage systems (600 V and below) where automatic isolation of a faulted circuit can be tolerated or where capability is lacking to isolate a ground fault in a high-resistance grounded system.
b) Medium- or high-voltage systems (above 15 kV) in order to permit the use of equipment with insulation levels to ground rated for less than line to line voltage.
c) Medium- or high-voltage applications where the desire for a higher magnitude of ground-fault current in order to be able to provide selective ground-fault detection on lengthy distribution feeders outweighs concerns about arc flash and potential gradients as personnel hazards in a workplace setting.

1.4.7 Characteristics of grounding methods

The advantages and disadvantages of the various methods of grounding are summarized in Table 1-1.

 Copyright © 2007 IEEE. All rights reserved.

Authorized licensed use limited to: COLORADO SCHOOL OF MINES. Downloaded on October 04,2023 at 04:18:37 UTC from IEEE Xplore. Restrictions apply.

Table 1-1—Characteristics of grounding methods

	Ungrounded	Solid grounding	Reactance grounding		Ground-fault neutralizer	Resistance grounding	
			Low value reactor	High value reactor		Low resistance	High resistance
Current for phase-to-ground fault in percent of three-phase fault current	Less than 1%	Varies, may be 100% or greater	Usually designed to produce 25% to 100%	5% to 25%	Nearly zero fault current	20% and downward to 100 A to 1000 A	Less than 1% but not less than system charging current, $3I_{co}$
Transient over-voltages	Very high	Not excessive	Not excessive	Not excessive	Not excessive	Not excessive	Not excessive
Surge arresters	Ungrounded-neutral type	Grounded-neutral type	Grounded-neutral type if current 60% or greater	Ungrounded-neutral type	Ungrounded-neutral type	Ungrounded-neutral type	Ungrounded-neutral type
Remarks	Not recommend ed due to overvoltages and non-segregation of fault	Generally used on systems (1) 600 V and below and (2) over 15 kV		Not used due to excessive overvoltages	Best suited for application in most medium-voltage industrial and commercial systems that are isolated from their electric utility system by transformers.[a]	Generally used on systems of 2.4 kV to 15 kV particularly where large rotating machines are connected.	Used on systems 600 V and below where service continuity is desired.[a]

[a]Caution should be applied in using this form of grounding with industrial generation (see IEEE Std 367™). Best suited for application in most medium-voltage industrial and commercial systems that are isolated from their electric utility system by transformers. Ideal for use on medium-voltage generators. Also occasionally found on mission-critical 2.4 kV or 4.16 kV industrial or commercial distribution systems.

Copyright © 2007 IEEE. All rights reserved.

Authorized licensed use limited to: COLORADO SCHOOL OF MINES. Downloaded on October 04,2023 at 04:18:37 UTC from IEEE Xplore. Restrictions apply.

1.5 Obtaining the system neutral

The best way to obtain the system neutral for grounding purposes in three-phase systems is to use source transformers or generators with wye-connected windings. The neutral is then readily available. Such transformers are available for practically all voltages except 240 V. On new systems, 208Y/120 V or 480Y/277 V, wye-connected transformers may be used to good advantage instead of 240 V. Wye-connected source transformers for 2400 V, 4160 V, and 13 800 V systems are available as a standard option, whereas 4800 V and 6900 V, wye-connected source transformers may be priced at a premium rate. The alternative is to apply grounding transformers.

1.5.1 Grounding transformers

System neutrals may not be available, particularly in many older systems rated 600 V or less and in many existing 2400 V, 4800 V, and 6900 V systems. When existing delta connected or ungrounded systems are to be grounded, grounding transformers can be used to obtain a neutral. The most commonly used grounding transformers are the zigzag and wye-delta type.

1.5.2 Zigzag grounding transformers

One type of grounding transformer commonly used is a three-phase zigzag transformer with no secondary winding. The internal connection of the transformer is illustrated in Figure 1-14(1). The impedance of the transformer to balanced three-phase voltages is high so that when there is no fault on the system, only a small magnetizing current flows in the transformer winding. The transformer impedance to zero-sequence voltages, however, is low so that it allows high ground-fault currents to flow. The transformer divides the ground-fault current into three equal components; these currents are in phase with each other and flow in the three windings of the grounding transformer. The method of winding is seen from Figure 1-14(1) to be such that when these three equal currents flow, the current in one section of the winding of each leg of the core is in a direction opposite to that in the other section of the winding on that leg. This tends to force the ground-fault current to have equal division in the three lines and accounts for the low impedance of the transformer-to-ground currents.

A zigzag transformer may be used for effective grounding, or an impedance can be inserted between the derived neutral of the zigzag transformer and ground to obtain the desired method of grounding. This transformer is seldom employed for medium-voltage, high-resistance grounding. An example of low-resistance grounding is shown in Figure 1-14(2). The overcurrent relay, 51G, is used to sense neutral current that only flows during a line-to-ground fault.

 Copyright © 2007 IEEE. All rights reserved.

Authorized licensed use limited to: COLORADO SCHOOL OF MINES. Downloaded on October 04,2023 at 04:18:37 UTC from IEEE Xplore. Restrictions apply.

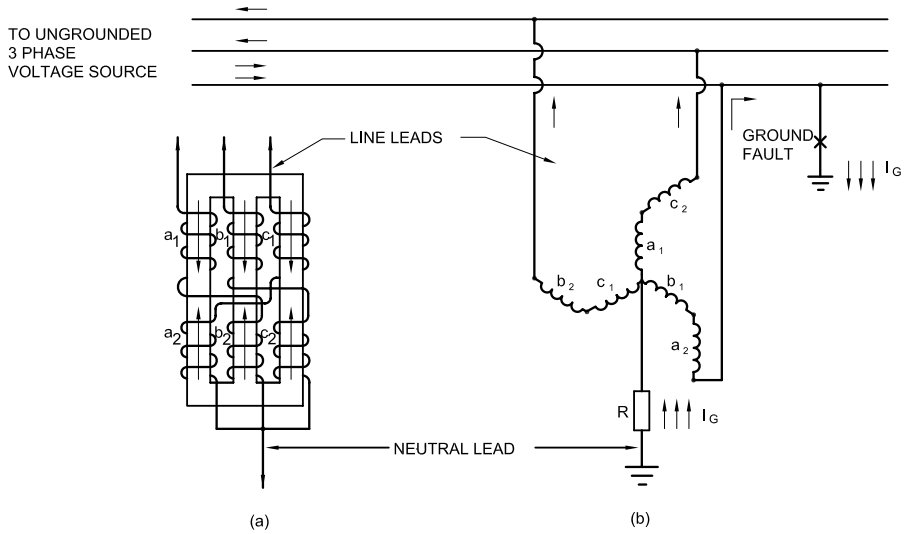

Figure 1-14(1)—Zigzag grounding transformer: (a) core windings, (b) system connection

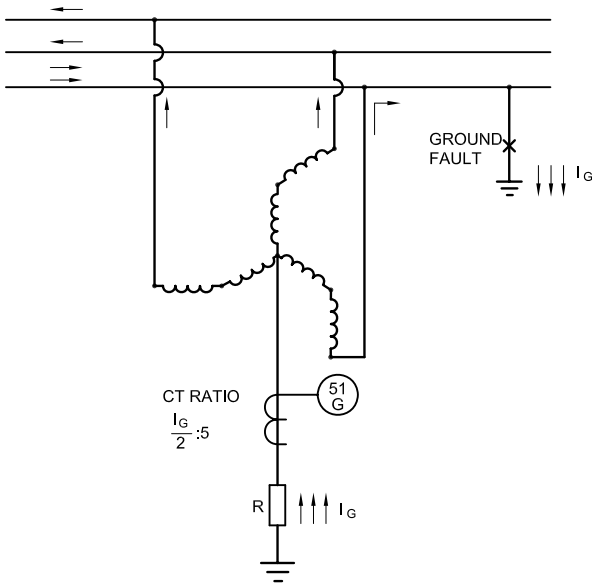

Figure 1-14(2)—Low-resistance grounding of system through a zigzag grounding transformer with neutral sensing current relay

Copyright © 2007 IEEE. All rights reserved.

Authorized licensed use limited to: COLORADO SCHOOL OF MINES. Downloaded on October 04,2023 at 04:18:37 UTC from IEEE Xplore. Restrictions apply.
Affordable Wire Management, Exhibit No. EX1019
Case No. IPR2024-00182
Page 33 of 225

1.5.3 Wye-delta grounding transformers

A wye-delta connected three-phase transformer or transformer bank can also be utilized for system grounding, as shown in Figure 1-15(a) and Figure 1-15(b). As in the case of the zigzag transformer, it can be used for effective grounding or to accomplish resistance-type grounding of an existing ungrounded system. The delta connection must be closed to provide a path for the zero-sequence current, and the delta voltage rating is selected for any standard value. A resistor inserted between the primary neutral and ground, as shown in Figure 1-15(a) and Figure 1-15(b), provides a means for limiting ground-fault current to a level satisfying the criteria for resistance-grounded systems. For this arrangement, the voltage rating of the wye winding need not be greater than the normal line-to-neutral system voltage. A neutral sensing current relay, 51G, is shown for detection of a single line-to-ground fault. For high-resistance grounding it is sometimes more practical or economical, as illustrated in Figure 1-16, to apply the limiting resistor in the secondary delta connection. For this configuration the grounding bank must consist of three single-phase transformers with the primary wye neutral connected directly to ground. The secondary delta is closed through a resistor that effectively limits the primary ground-fault current to the desired low level. For this alternative application, the voltage rating of each of the transformer windings forming the wye primary should not be less than the system line-to-line voltage.

The rating of a three-phase grounding transformer or bank, in kilovoltampere (kVA), is equal to the rated line-to-neutral voltage in kilovolts times the rated neutral current (see *Electrical Transmission and Distribution Reference Book*). Most grounding transformers are designed to carry their rated current for a limited time only, such as 10 s or 1 min. Consequently, they are much smaller in size than an ordinary three-phase continuously rated transformer with the same rating.

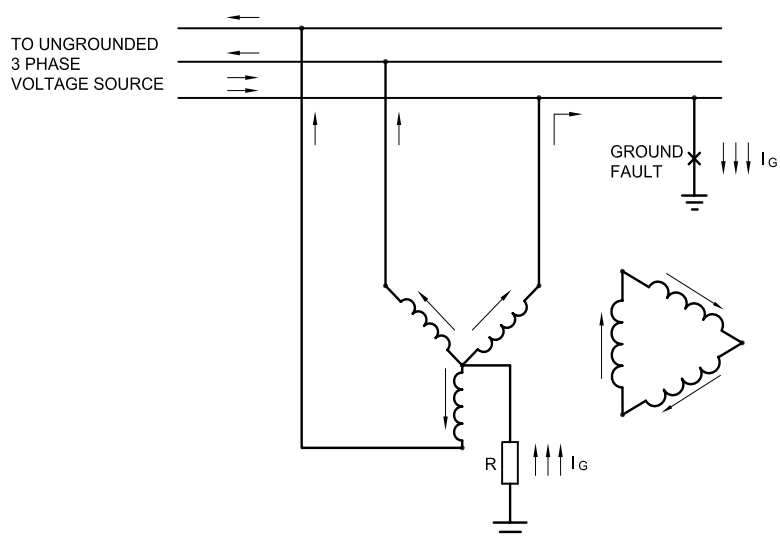

Figure 1-15(a)—Wye-delta grounding transformer showing current flow

 Copyright © 2007 IEEE. All rights reserved.

Authorized licensed use limited to: COLORADO SCHOOL OF MINES. Downloaded on October 04,2023 at 04:18:37 UTC from IEEE Xplore. Restrictions apply.

Affordable Wire Management, Exhibit No. EX1019
Case No. IPR2024-00182
Page 34 of 225

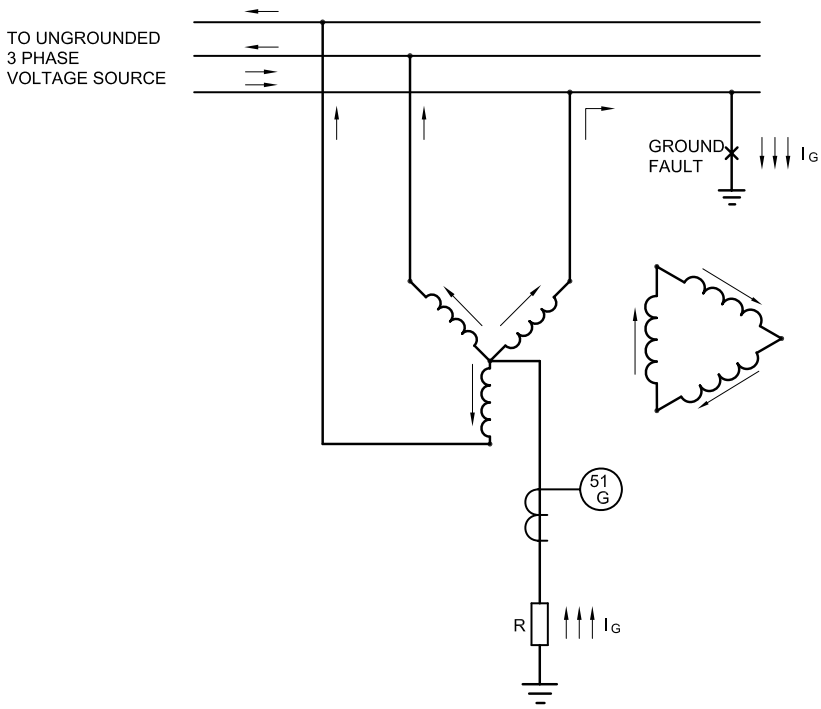

Figure 1-15(b)—Low-resistance grounding of system through a wye-delta grounding transformer with neutral sensing current relay

It is generally desirable to connect a grounding transformer directly to the main bus of a power system, without intervening circuit breakers or fuses, to prevent the transformer from being inadvertently taken out of service by the operation of the intervening devices. (In this case the transformer is considered part of the bus and is protected by the relaying applied for bus protection.) Alternatively, the grounding transformer should be served by a dedicated feeder circuit breaker, as shown in part a) of Figure 1-17, or connected between the main transformer and the main switchgear, as illustrated in part b) of Figure 1-17. If the grounding transformer is connected as shown in part b) of Figure 1-17, there should be one grounding transformer for each delta-connected bank supplying power to the system, or enough grounding transformers to assure at least one grounding transformer on the system at all times. When the grounding transformer is so connected, it is included in the protective system of the main transformer.

1.5.4 Grounding at points other than system neutral

In some cases, low-voltage systems (600 V and below) are grounded at some point other than the system neutral to obtain a grounded electrical system. This is done because delta transformer connections do not provide access to the three-phase system neutral. Two systems are in general use.

Copyright © 2007 IEEE. All rights reserved.

Authorized licensed use limited to: COLORADO SCHOOL OF MINES. Downloaded on October 04,2023 at 04:18:37 UTC from IEEE Xplore. Restrictions apply.

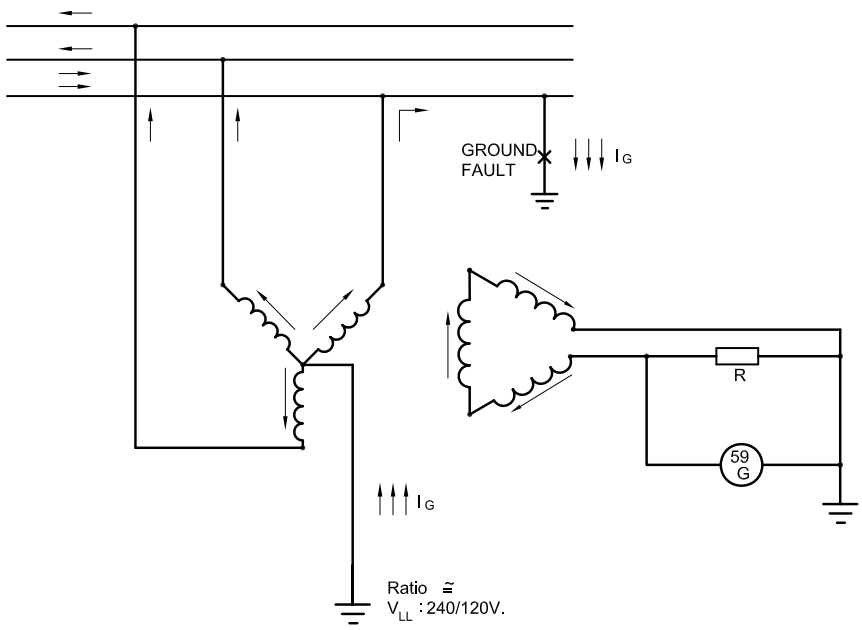

Figure 1-16—High-resistance grounding of system through a wye-broken delta grounding transformer with neutral sensing voltage relay

1.5.5 Corner-of-the-delta grounded systems

Some low-voltage, ungrounded systems, have been conceived, as shown in part b) of Figure 1-13, using delta connected supply transformers with no readily available neutral grounding. Because of its limitations, this type of grounding is no longer popular and is not widely used in industrial systems.

1.5.6 One phase of a delta system grounded at midpoint

In some areas where the utility has both a single-phase 120/240 V load and three-phase 240 V loads, they have supplied a larger single-phase 120/240 V transformer and one or two smaller 240 V transformers, all connected in delta with the midpoint of the 120/240 V grounded for a 240/120 V three-phase four-wire system. This provides neutral grounding for the single-phase 120/240 V and also grounding for the 240 V three-phase system. It is not recommended for voltages over 240 V.

The advantages of this type of grounding scheme are as follows:

a) First cost for transformers and fuses can be less than for separate single transformer and three-phase systems.

b) Mid-phase grounding effectively controls, to safe levels, the transient overvoltages to ground.

c) These diverse loads can be served from a single service.

 Copyright © 2007 IEEE. All rights reserved.

Authorized licensed use limited to: COLORADO SCHOOL OF MINES. Downloaded on October 04,2023 at 04:18:37 UTC from IEEE Xplore. Restrictions apply.

The disadvantages are as follows:

1) The shock hazard of the high phase leg to ground is 208 V, which is 1.73 times the voltage of a neutral grounded 240 V system. Since this voltage can appear across a single pole of a breaker, 277 V rated breakers may be required.
2) There must be positive identification of the conductor with the highest voltage to ground to avoid connecting 120 V loads to that conductor.
3) The fault currents on the single-phase system may be higher than normally expected for the size of the system, possibly requiring higher rated panelboards.

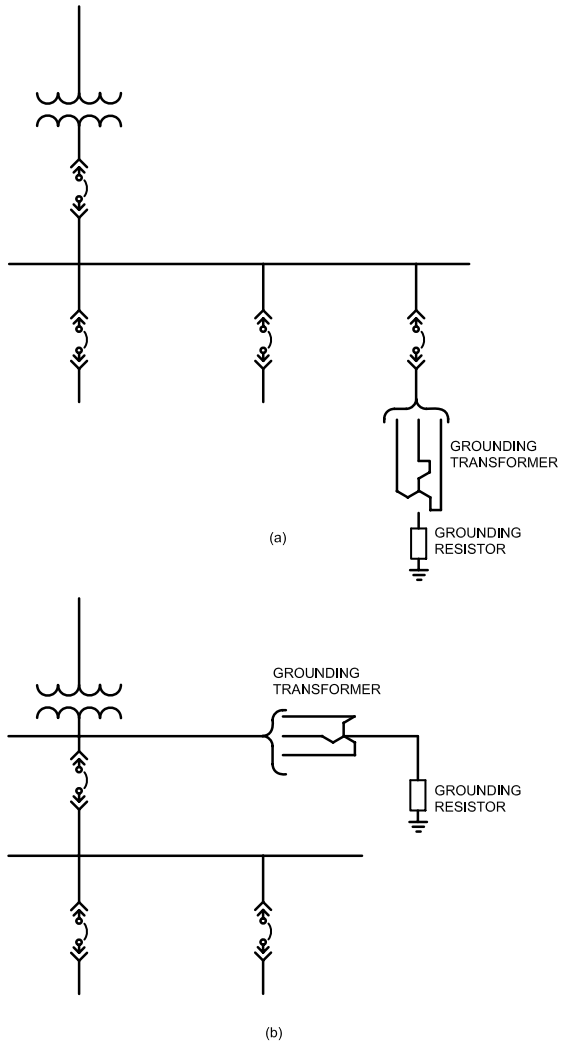

Figure 1-17—Connection of grounding transformers in delta connected or ungrounded power system to obtain neutral for system grounding: (a) circuit feeder breaker, (b) connected between main transformer and main switch gear

Copyright © 2007 IEEE. All rights reserved.

Authorized licensed use limited to: COLORADO SCHOOL OF MINES. Downloaded on October 04,2023 at 04:18:37 UTC from IEEE Xplore. Restrictions apply.
Affordable Wire Management, Exhibit No. EX1019
Case No. IPR2024-00182
Page 37 of 225

1.6 Location of system grounding points

1.6.1 Selection

Each system as described in this chapter is characterized by its isolation from adjacent grounding systems. The isolation is provided by transformer primary and secondary windings. The NEC defines such a system as "separately derived." A separately derived system is one "whose power is derived from a generator, transformer, or converter windings and that has no direct electrical connection, including a solidly connected grounded circuit conductor, to supply conductors originating in another system." Therefore, the new system created by a transformer or generator requires the establishment of a new system ground if it is required or desired that this system be grounded. See Figure 1-4 for an example of grounding each separately derived system. The system ground point should always be at the power source as required or permitted by the NEC, including exceptions for multi-source systems.

1.6.2 Transformer configurations

There are two requirements that must be met for a transformer to provide a system ground. The first requirement is fairly intuitive; the transformer winding at the voltage where a ground is desired must be connected in wye (sometimes referred to as *star* in European practice). The wye is essential to provide a neutral point that can be connected to earth; a delta winding does not present a neutral point and therefore there is no electrical connection that could be connected to earth for the purpose of establishing a ground reference for the system. Alternatively, transformers with windings connected in the interconnected star or *zigzag* configuration also provide a neutral point that can be grounded.

The second requirement is a bit more involved. Table 1-1 lists a number of options for the mode of system grounding; in order for these options to exist, the impedance of the transformer to ground-fault current must be significantly lower than the impedance of the connection between the neutral and earth such that this neutral impedance governs the selection of grounding mode. The *Electrical Transmission and Distribution Reference Book* provides a good theoretical background for this statement. Essentially, however, this requirement translates into a requirement that the transformer contain a second winding that is connected in delta. Thus, a transformer that is intended to provide a system ground must provide a wye-connected winding at the voltage of the system to be grounded, and must also contain a delta winding. The most common configuration that meets this requirement in industrial and commercial applications is a transformer that has a delta-connected primary winding and a wye-connected secondary winding.

Wye-wye transformers alone cannot be used to ground industrial and commercial power systems. In special cases it is possible to use wye-wye transformers that are equipped with delta-connected tertiary windings to provide system grounding. This arrangement can be designed for low-resistance grounding as well as effective grounding. It is also possible to use wye-connected autotransformers provided they also have a delta-connected tertiary winding, although this is a relatively uncommon practice and should only be used to provide effective (solid) grounding—applying a neutral grounding resistor between

 Copyright © 2007 IEEE. All rights reserved.

Authorized licensed use limited to: COLORADO SCHOOL OF MINES. Downloaded on October 04,2023 at 04:18:37 UTC from IEEE Xplore. Restrictions apply.

ground and the neutral of an autotransformer can lead to undesirable neutral voltage excursions.

It is also a relatively common practice to use wye-wye transformers with special five-leg magnetic cores to serve commercial applications on effectively grounded (utility) distribution systems. This connection is chosen to address concerns with ferroresonance that come about because of single-phase switching (it is a common practice that utility distribution systems use single-point load-break switching devices, typically hook-stick operated), and this connection minimizes concerns with ferroresonance that would otherwise be present in that situation. But rather than provide system grounding itself, what the five-leg core wye-wye transformer does is to provide a continuous path for ground-fault currents from the primary distribution system into the commercial load on the secondary. Therefore, the system ground is actually established by the transformer that supplies the host distribution system. This practice therefore results in the commercial system also being effectively grounded.

1.6.3 Delta-wye transformer

In a delta-wye connected transformer, with the load-side neutral grounded, zero-sequence components of current can flow in the secondary wye-connected windings due to a ground fault. Zero-sequence current is then induced into the primary windings of the transformer and circulates in the delta connection. Positive and negative-sequence currents pass through the transformer combining to produce high current in two of the primary phase conductors. A ground fault on the secondary of the delta-wye connected transformer appears as a line-to-line fault on the primary. See Figure 1-18.

If the neutral of the wye-connected windings is not grounded, then zero-sequence current cannot flow and the system becomes ungrounded.

Zero-sequence components of current can flow through a wye-wye connected transformer if a neutral path exists on both sides of the transformer. An example is shown in Figure 1-20 where a delta-wye connected transformer, T_1, supplies power to a wye-wye connected transformer, T_2. A fault on the load side of T_2 produces zero-sequence current, which flows in the primary and secondary windings of that transformer. Zero-sequence current is permitted to flow in the primary of T_2 because a path exists in the delta-wye connected transformer T_1. Disconnecting any of transformer neutrals, on either T_1 or T_2, would prevent the flow of zero-sequence current in both transformers, except as allowed by magnetizing reactance.

Depending upon the connections to the transformer, the use of a wye-wye transformer can result in a single system, or its load side may be a separately derived system. Figure 1-19 and Figure 1-20 show a single system, whereas Figure 1-21 shows a separately derived system.

Copyright © 2007 IEEE. All rights reserved.

Authorized licensed use limited to: COLORADO SCHOOL OF MINES. Downloaded on October 04,2023 at 04:18:37 UTC from IEEE Xplore. Restrictions apply.

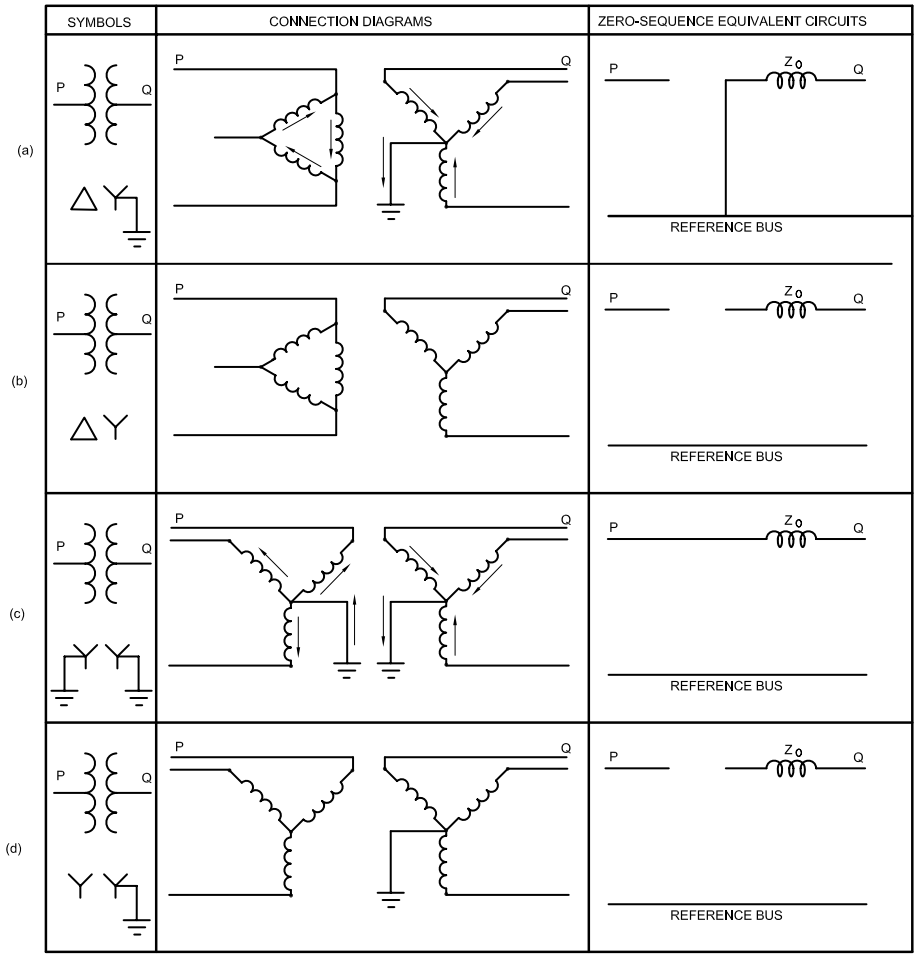

Figure 1-18—Zero-sequence impedance of different transformer configurations

NOTE—In Figure 1-18, configurations a) and c) permit the flow of zero-sequence current; b) and d) do not.[3]

1.6.4 Wye-wye transformers

A wye-wye transformer, T_2, is shown in Figure 1-20 with the primary and secondary neutrals interconnected and grounded. This transformer configuration is used on solidly grounded utility distribution systems, particularly underground systems, to prevent ferroresonance when the supply switches can be operated one pole at a time. The utilities

[3]Notes in text, tables, and figures are given for information only and do not contain requirements needed to implement the standard.

 Copyright © 2007 IEEE. All rights reserved.

Authorized licensed use limited to: COLORADO SCHOOL OF MINES. Downloaded on October 04,2023 at 04:18:37 UTC from IEEE Xplore. Restrictions apply.
Affordable Wire Management, Exhibit No. EX1019
Case No. IPR2024-00182
Page 40 of 225

ground the primary neutral point to minimize the neutral-to-earth voltage throughout the length of the distribution line and by default on underground systems using bare concentric neutral cables. They ground the secondary neutral to provide an effectively grounded low-voltage service. Note that this multiple grounding of the primary at each transformer is not essential to prevent ferroresonance or provide secondary grounding as long as the fourth conductor is brought to the primary neutral of the transformer. The neutral-to-transformer case and ground connection minimizes secondary neutral-to-ground voltage during a fault between primary and transformer case.

In an industrial distribution system, the physical length of the circuit will usually be short enough so that excessive neutral-to-ground voltages will not be present even if there is no ground at the wye-wye transformer common neutral terminals, as shown in Figure 1-19. The NEC normally prohibits grounding of the neutral on the load side of the service disconnect, but allows multigrounding of the neutral of an outdoor overhead line or direct burial cable with bare neutral if the circuit voltage is over 1000 V.

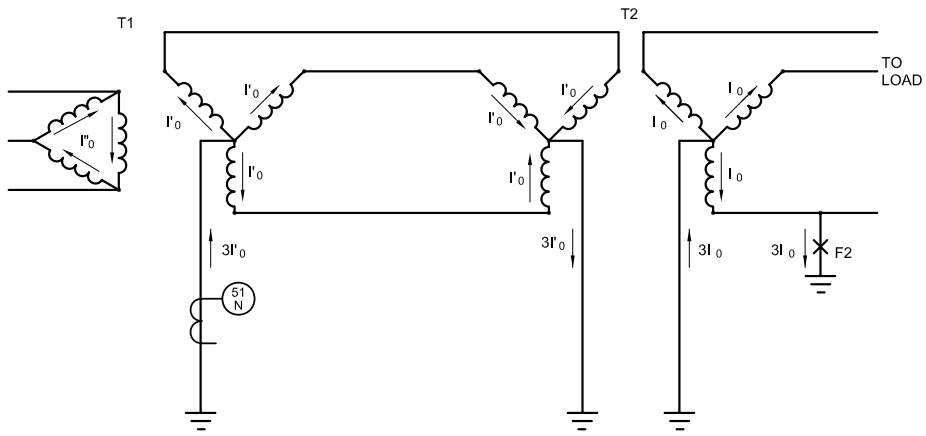

Figure 1-19—Transformer connections illustrating the flow of zero-sequence current resulting from a line to ground fault

As shown in Figure 1-19, with a continuous connection from the source neutral to the primary and secondary neutrals of the wye-wye transformer, the output of the transformer would not constitute a separately derived system as defined in the NEC. If the neutral is grounded at the source, T_1, the output of the wye-wye transformer will be a continuation of the grounded system, though at the secondary voltage of the transformer. A fault, F_2, on the load side of the wye-wye connected transformer, $T_{2,}$ will produce zero-sequence components of current in its primary windings. This zero-sequence current will flow back to the secondary neutral terminal of source transformer, T_1. However, this current flowing through 51G cannot determine whether the fault is located before or after the wye-wye transformer, nor can residual or zero-sequence ground detection schemes on the output of T1. The main benefit of this transformer connection is to utilize the standard wye-wye transformer that contains an internal primary-to-secondary neutral connection suitable for utility practice as shown in Figure 1-20.

Copyright © 2007 IEEE. All rights reserved.

Authorized licensed use limited to: COLORADO SCHOOL OF MINES. Downloaded on October 04,2023 at 04:18:37 UTC from IEEE Xplore. Restrictions apply.
Affordable Wire Management, Exhibit No. EX1019
Case No. IPR2024-00182
Page 41 of 225

The circuit supplied by the wye-wye connected transformer shown in Figure 1-21 can be considered a separately derived system, since there are no direct metallic connections between the primary and secondary of the transformer. Primary and secondary ground faults are separately measured and relayed. The secondary of the transformer will not be grounded unless a connection to earth is made. The secondary could be impedance grounded. Secondary neutral grounding will also require a connection from the neutral of the primary source to the primary neutral of the wye-wye transformer to supply zero-sequence current. Unlike the delta-wye transformer, the wye-wye transformer itself is not a source of zero-sequence current. Grounding can be achieved without a primary neutral connection if a phase of the secondary rather than the neutral is grounded, since no zero-sequence current is involved. The effect is then identical to corner grounding of a delta-delta transformer.

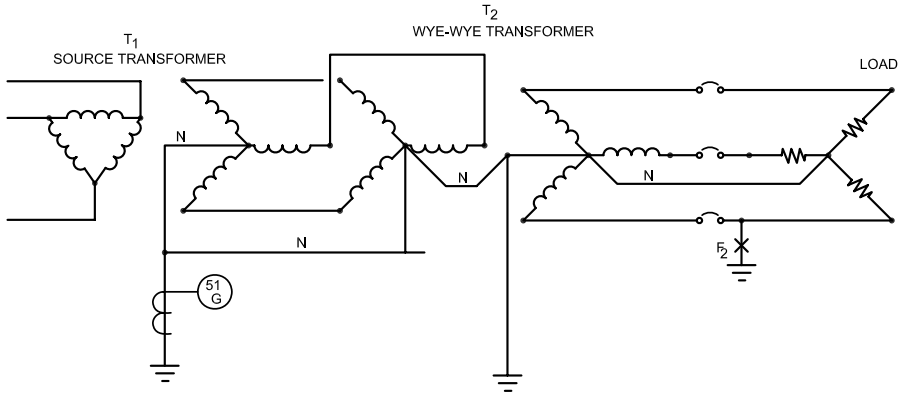

Figure 1-20—Grounded wye-grounded wye transformer with multigrounded common neutral

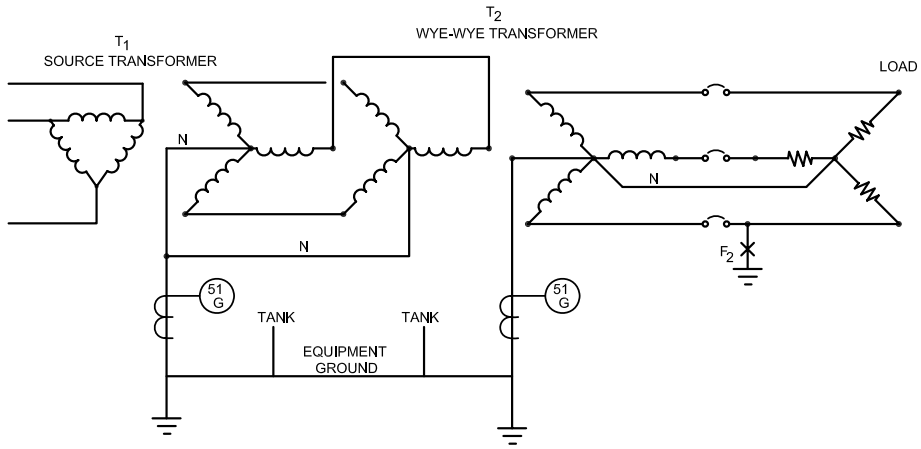

Figure 1-21—Grounded wye-grounded wye transformer with separately grounded neutrals

 Copyright © 2007 IEEE. All rights reserved.

Authorized licensed use limited to: COLORADO SCHOOL OF MINES. Downloaded on October 04,2023 at 04:18:37 UTC from IEEE Xplore. Restrictions apply.

If a delta tertiary is added to a wye-wye transformer it will not be necessary to supply zero-sequence current from the primary source, since the tertiary will act as a source of zero-sequence current.

Thus, the wye-wye transformer can be considered a part of a single multi-voltage system if the neutrals are interconnected or can be considered to create a separate system if they are not. The symmetry of the wye-wye allows it to provide grounding for its load-side system even though the source and load side may be interchanged at any time.

1.6.5 Single power source

When a system has only one source of power (generator or transformer), grounding may be accomplished by connecting the source neutral to earth either directly or through a neutral impedance (Figure 1-22). Provision of a switch or circuit breaker to open the neutral circuit is not recommended. It is not desirable to operate the system ungrounded by having the ground connection open while the generator or transformer is in service.

In the event that some means of disconnecting the ground connection is required for measurement, testing, or repair, a disconnecting link should be used and only opened when the system is de-energized.

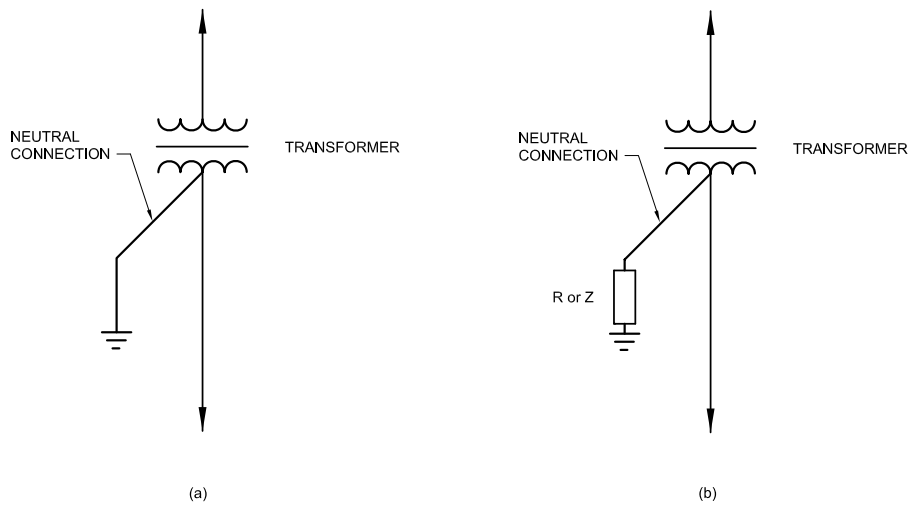

Figure 1-22—Grounding for systems with one source of power: (a) solidly grounded, (b) *R* or *Z* grounded.

1.6.6 Multiple power sources

For installation of interconnected multiple power sources (i.e., generators or power transformers), operated in parallel, system grounding can be accomplished using one of the two following methods:

a) Each source grounded, with or without impedance (Figure 1-23).

Copyright © 2007 IEEE. All rights reserved.

Authorized licensed use limited to: COLORADO SCHOOL OF MINES. Downloaded on October 04,2023 at 04:18:37 UTC from IEEE Xplore. Restrictions apply.
Affordable Wire Management, Exhibit No. EX1019
Case No. IPR2024-00182
Page 43 of 225

b) Each source neutral connected to a common neutral bus, which is then grounded, with or without impedance (Figure 1-24).

For solidly grounded systems, with multiple sources, where all sources must be solidly grounded, it is acceptable to separately ground each power source as shown in part a) of Figure 1-23 unless third harmonics are present or if it results in exceeding the fault capability of the generators. Levels of fault current in systems where generators are paralleled with transformer sources on a four-wire basis must be calculated using symmetrical component sequence values for the sources appropriately combined in the system (see Nichols). Commercial computer programs are now available that will calculate branch currents for unbalanced faults in systems with both utility and generator sources. There can be a significant increase in the total system ground-fault current as compared to the sum of the fault current available from sources when not in a combined system, while the increase in generator currents can be proportionally even greater. Refer to 1.7.3.2. Where sources are in close proximity, or where the system is four wire, the common neutral or ground bus as shown in part a) of Figure 1-24 should be used. In a four-wire system the sources would not be considered as separately derived.

If the power sources are not in close proximity, common ground point is not recommended. The impedance in the neutral bus connection may become large enough to prevent effectively grounding the neutral of the source at the remote location. The interconnection may inadvertently become open, allowing the transformer to operate ungrounded.

For impedance grounded systems it is acceptable to separately connect each neutral to ground through an individual impedance [part b) of Figure 1-23]. Each impedance rating should allow sufficient current to satisfy the criteria for the grounding system being used.

Individual neutral switching devices (automatic or manual) are not recommended, since incorrect operation may allow a power source to operate ungrounded.

System relaying is more complex when there are multiple ground-fault sources. The fault current sensed by the feeder is variable, depending on the number of ground-fault current sources that are connected at the time of the fault.

When individual source impedances are used for low- or high-resistance grounding, circulation of third harmonic currents between paralleled generators is usually not a problem since the impedance limits the circulating current to tolerable values. When the total ground-fault current from several individual impedances exceeds about 1000 A, a common ground point and single impedance should be considered to provide a single acceptable value of ground-fault current [part b) of Figure 1-24]. The advantage of this connection is that the maximum fault current is known, and selective relaying can be used to open tie breakers and selectively isolate the faulted bus.

 Copyright © 2007 IEEE. All rights reserved.

Authorized licensed use limited to: COLORADO SCHOOL OF MINES. Downloaded on October 04,2023 at 04:18:37 UTC from IEEE Xplore. Restrictions apply.

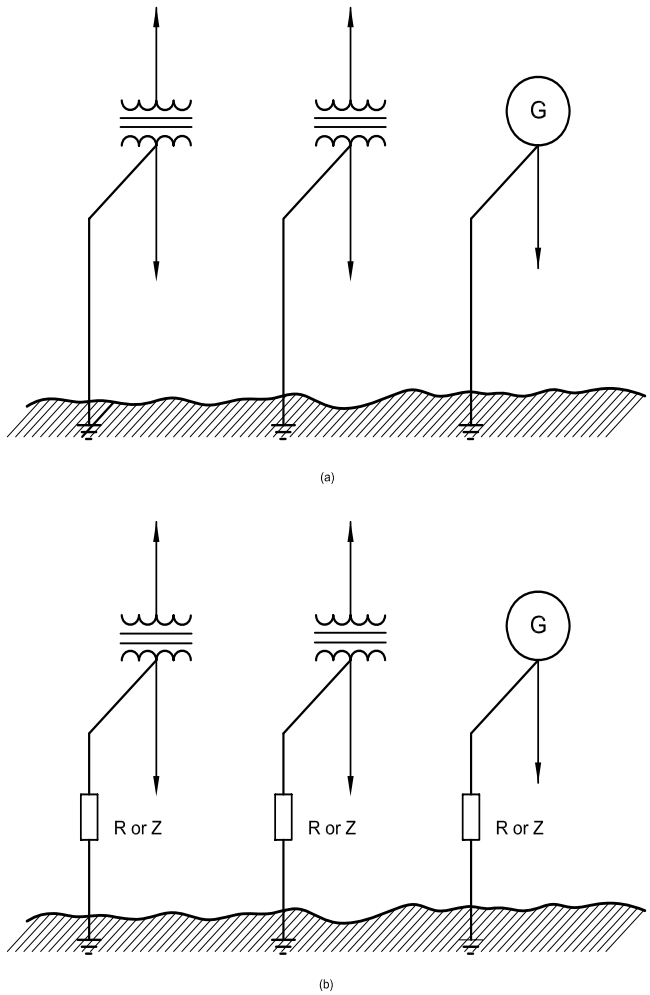

Figure 1-23—Grounding for systems with multiple power sources (Method 1): (a) solidly grounded, (b) *R* or *Z* grounded

The primary purpose of neutral disconnecting devices in impedance grounded systems, as shown in part b) of Figure 1-24, is to isolate the generator or transformer neutral from the neutral bus when the source is taken out of service, because the neutral bus is energized during ground faults. A generator or transformer disconnected from the power bus, but with an unbroken connection of its neutral to the neutral bus, would have all of its terminals elevated with respect to ground during a ground fault. Disconnecting devices should be metal enclosed and interlocked in such a manner as to prevent their operation except when the transformer primary and secondary switches or generator main and field circuit breakers are open. On low-voltage systems the use of four-pole breakers may provide adequate interlocking. In this case line-to-neutral voltage should not be used for synchronizing.

Copyright © 2007 IEEE. All rights reserved.

Authorized licensed use limited to: COLORADO SCHOOL OF MINES. Downloaded on October 04,2023 at 04:18:37 UTC from IEEE Xplore. Restrictions apply.
Affordable Wire Management, Exhibit No. EX1019
Case No. IPR2024-00182
Page 45 of 225

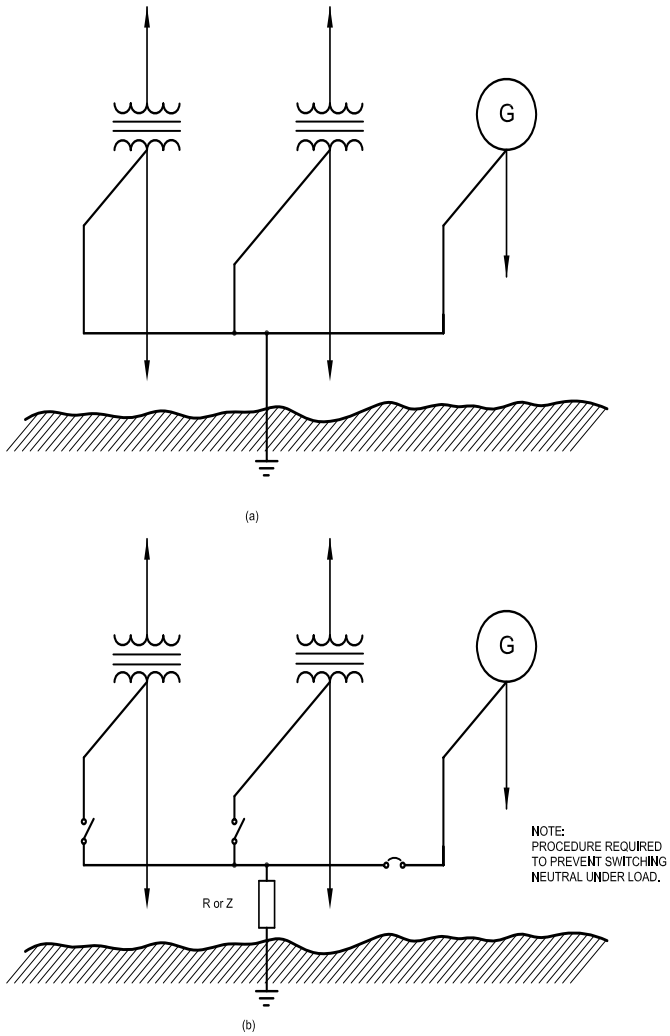

Figure 1-24—Grounding for systems with multiple power sources (Method 2): (a) solidly grounded, (b) *R* or *Z* grounded

In the case of multiple transformers, all neutral isolating devices may be normally closed because the presence of delta-connected windings (which are nearly always present on at least one side of each transformer) minimizes the circulation of harmonic current between transformers. Generators that are designed to suppress zero-sequence harmonics, usually by the use of a two-thirds pitch winding, will have negligible circulating currents when operated in parallel; therefore, it is often found practical to operate these types of generators with the neutral disconnect device closed. This simplifies the operating procedure and increases assurance that the system will be grounded at all times, because interlocking methods can be used.

 Copyright © 2007 IEEE. All rights reserved.

Authorized licensed use limited to: COLORADO SCHOOL OF MINES. Downloaded on October 04,2023 at 04:18:37 UTC from IEEE Xplore. Restrictions apply.

It is sometimes desirable to operate with only one generator neutral disconnecting device closed at a time to eliminate any circulating harmonic or zero-sequence currents. In addition, this method provides control over the maximum ground-fault current and simplifies ground relaying. When the generator whose neutral is grounded is to be shut down, another generator is grounded by means of its neutral disconnecting device before the main and neutral disconnecting device of the first one are opened. This method has some inherent safety considerations that must be recognized and addressed in order to ensure continual safe operation. The procedures required to permit only one disconnecting device to be closed with multiple sources generally do not permit the use of conventional interlocking methods to ensure that at least one neutral disconnecting device will be closed. Therefore, this method should only be used where strict supervision of operating procedures is assured.

1.6.7 Grounding locations specified by the NEC

The following locations for ground connections are required, or permitted, by the NEC for the most common types of power system grounding. This is not intended to be a complete listing of code requirements, and the current edition of the NEC should be consulted for details or recent changes as well as to determine whether grounding is required or prohibited. The purpose of this subclause is to call attention to location requirements and not to interpret the requirements, since that is the province of the cognizant enforcing authorities.

On service-supplied systems of 50 V to 1000 V, system grounding, when required or elected, should be made at the service entrance, between the load end of the service drop or lateral and the neutral landing point. If the service is supplied from a transformer external to the building one additional grounding point is required external to the building. If a grounded conductor extends past the service entrance switch, it should have no further grounds on this extension except as noted by the various exceptions in the NEC to this requirement, as follows.

Where dual services feed a double-ended bus, a single ground at the center point of the neutral bus is allowed to replace those previously listed.

If more than one building is fed from a single service there should be a system grounding connection made at the entrance to each building. However, if an EGC is run with the load conductors, this ground connection can be eliminated so as to avoid elevating non-current-carrying enclosures above ground potential due to load drop in the neutral conductor.

Grounding connections should not be located or connected so as to cause objectionable currents in grounding conductors or grounding paths.

Separately derived circuits, if required or elected to have a system ground, should be grounded between the source and the first disconnecting device. System grounding connections downstream of the disconnecting device have the same rules as for service-supplied circuits.

Copyright © 2007 IEEE. All rights reserved.

Authorized licensed use limited to: COLORADO SCHOOL OF MINES. Downloaded on October 04,2023 at 04:18:37 UTC from IEEE Xplore. Restrictions apply.

The point of grounding for systems shall be the neutral or common conductor where one exists; otherwise the point shall be a phase conductor.

On systems over 1000 V, a transformer-derived neutral may also be used as the attachment point for a system ground. This method is not mentioned for effective grounding of low-voltage systems.

High-voltage and medium-voltage systems may also have multiple neutral grounds where the conductors are overhead outdoors or where they are directly buried with a bare neutral conductor.

1.7 Grounding of industrial and commercial generators

1.7.1 Industrial and commercial generator characteristics

Generators have several characteristics that are significantly different from transformers, the other common source of power. As compared to the transformer, the generator has little ability to withstand the heating effects or mechanical forces of short circuits. The generator may be required by standards to withstand a less than 10-per-unit short circuit, and the imposition of higher currents is defined as unusual service by the National Electrical Manufacturers Association (NEMA) MG 1, whereas a transformer may be required to withstand a 25 per-unit current. The generator may be capable of withstanding less than 25% of the heating effect of this current as compared to the transformer. If the current is unbalanced, this capability may be reduced to less than 10% of the transformer capability (see NEMA MG 1; Nichols).

Unlike the transformer, the three sequence reactances of a generator are not equal. The zero-sequence reactance has the lowest value, and the positive-sequence reactance varies as a function of time. Thus, a generator will usually have higher initial ground-fault current than a three-phase fault current if the generator has a solidly grounded neutral. According to NEMA, the generator is required to withstand only the three-phase current level unless it is otherwise specified (see NEMA MG 1). Also, NEMA states that the negative-sequence current thermal withstand limit is a product of time in seconds and the square of per-unit negative-sequence current (I_2^2t) equaling 40 (see NEMA MG 1). With a solidly grounded neutral, the steady-state ground-fault current will be about eight times that of full-load current, while the steady-state three-phase fault current is three times full-load current; but, because of the negative-sequence content of the ground-fault current, the generator has less thermal withstand capability than it would for a three-phase fault.

Generators produce slightly nonsinusoidal voltages because of saturation and imperfect winding and flux distribution (see Woodbury). Industrial generators therefore produce odd harmonic voltages, with the third harmonic voltage being as much as 10%. These harmonic voltages can cause heating from circulating currents in a closed loop. This is one reason why most industrial generators have their internal windings connected in wye rather than delta. The third harmonic voltages produced in the generator's windings are in phase and additive. This would cause third harmonic current to circulate within the delta-connected windings, as shown in Figure 1-25. The circulating current would create

 Copyright © 2007 IEEE. All rights reserved.

Authorized licensed use limited to: COLORADO SCHOOL OF MINES. Downloaded on October 04,2023 at 04:18:37 UTC from IEEE Xplore. Restrictions apply.

additional heating within the generator thereby reducing some of its thermal capacity. Generators that operate in a delta connection allow for this in their design.

If the generator windings are designed with a two-thirds pitch, the third harmonic voltage can be suppressed (see Baker), but the zero-sequence impedance will be lowered increasing the ground-fault current.

A grounded generator connected to a delta-wye transformer is shown in Figure 1-26. Any third harmonic voltage, V_3, produced by the generator would be impressed on the primary of the transformer. Since the third harmonic voltages are in phase, the voltage difference across each winding of the transformer's delta will equal zero and no third harmonic, or multiples of the third harmonic, current can be expected to flow.

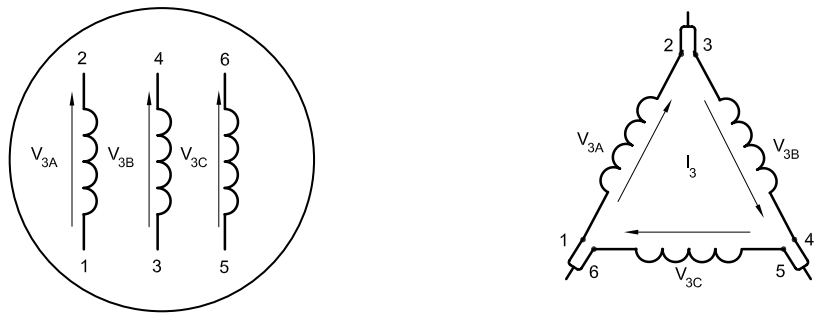

Figure 1-25—Circulation of third harmonic current in a delta-connected generator

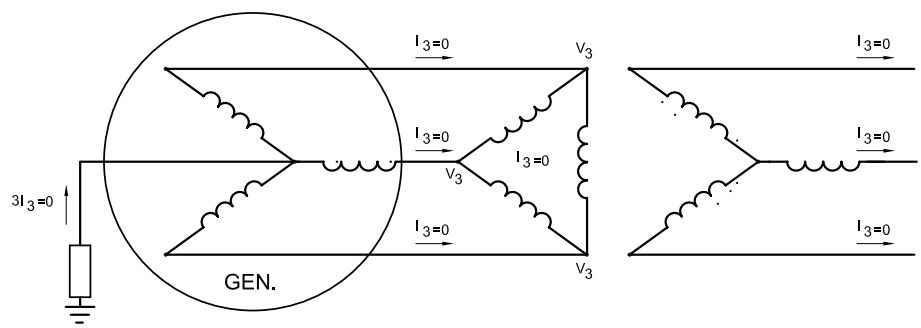

Figure 1-26—Analysis of third harmonic current (no zero-sequence loop)

Copyright © 2007 IEEE. All rights reserved.

Authorized licensed use limited to: COLORADO SCHOOL OF MINES. Downloaded on October 04,2023 at 04:18:37 UTC from IEEE Xplore. Restrictions apply.
Affordable Wire Management, Exhibit No. EX1019
Case No. IPR2024-00182
Page 49 of 225

Any current flowing as a result of a line-to-ground fault on the secondary side of the transformer will appear, as shown in Figure 1-27, as a line-to-line fault at the generator output. This type of fault is the most damaging to the generator because of its negative-sequence content. There will be no zero-sequence current flow in the generator even though the generator is grounded. Zero-sequence current will circulate in the delta winding of this transformer.

The physical limitations imposed by generator construction results in less available insulation thickness, with a resulting reduction in voltage-impulse withstand as compared to nonrotating electrical equipment. Thus, special attention should be given to limiting voltage to ground by the grounding of generator neutrals.

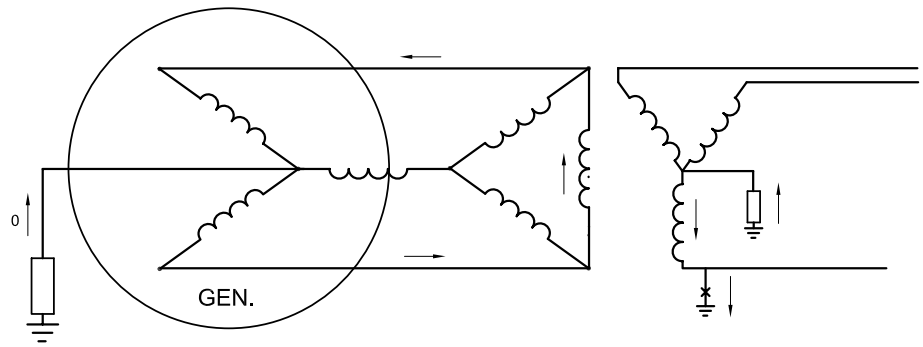

Figure 1-27—Zero-sequence currents during a wye side fault

Internal ground faults in solidly grounded generators can produce large fault currents. These currents can damage the laminated core, adding significantly to the time and cost of repair. Such currents persist until the generator voltage decays, since they are not capable of being interrupted by the generator circuit breaker (see McFadden). Both magnitude and duration of these currents should be limited whenever possible.

NOTE—One per unit is equal to generator-rated current.

1.7.2 Single unparalleled generator

This configuration may offer the most options for grounding. The distribution system may be particularly designed for flexibility in applying grounding by having only three-wire loads connected directly to the generator or even having only a single transformer connected to the generator (unit bank). Thus the design may employ high-resistance grounding to minimize damage from internal ground faults, or low-resistance grounding if needed to operate selective ground relays. In either case the ground-current level should be substantially less than the phase-current fault levels.

The generator may also be applied to a four-wire load without transformation. If the generator is rated for solidly grounded service, the neutral may be connected directly to

 Copyright © 2007 IEEE. All rights reserved.

Authorized licensed use limited to: COLORADO SCHOOL OF MINES. Downloaded on October 04,2023 at 04:18:37 UTC from IEEE Xplore. Restrictions apply.

the grounded circuit conductor. If a standard generator is used, a reactor should be connected between neutral and the grounded circuit conductor so as to limit the momentary ground-fault current to no more than the momentary three-phase fault current (see Beeman; NEMA MG 1). When $3i_0 = i''_d$ the value of this neutral reactor, X_N, should be as shown in Equation (1.1):

$$X_N = 1/3(2X''_d - X_2 - X_0) \tag{1.1}$$

where

$3i_0$ = Ground-fault current = $3V_{in}/(X''_d + X_2 + X_0 + 3X_n)$

i''_d = Three-phase subtransient fault current = V_{in}/X''_d

X''_d = Generator subtransient reactance

X_2 = Generator negative-sequence reactance

X_0 = Generator zero-sequence reactance

V_{in} = Phase to neutral voltage

Note that a resistor should not be used for this purpose, since its impedance is in quadrature with the machine reactance and thus would require a much larger value of resistance than reactance. This resistance would incur large losses from the flow of either fault or load current. The zero-sequence load current would also produce an objectionable voltage drop, since the load is primarily resistive.

On the other hand, the neutral reactor will cause little voltage drop to be produced by in-phase zero-sequence load current. The total zero-sequence current will be a small value because the generator has limited unbalanced current capacity. The continuous negative-sequence current capability of generators covered in ANSI C50 standards is 8% or 10%. For salient-pole generators covered under NEMA MG 1, the limit is 10% at full load. The use of the reactor between the generator neutral and the neutral circuit conductor does not affect the NEC requirement that the neutral circuit conductor be solidly grounded.

If generators are solidly grounded, the system's circuit breaker duty must be calculated at the higher ground-fault duty.

If the wye side of a delta-wye transformer is connected to a generator that is configured for four-wire service, the generator should be designed with a two-thirds pitch winding. This transformer will act as a short circuit to third harmonic currents, and without cancellation of third harmonic voltage, the resultant current may adversely affect ground-fault relaying and generator capacity.

1.7.3 Paralleled generators in an isolated system

This subclause covers only those generators that are paralleled to other generators on the same bus. Generators paralleled through transformers would be considered as paralleled to a separate source. (See Pillai et al.)

Copyright © 2007 IEEE. All rights reserved.

Authorized licensed use limited to: COLORADO SCHOOL OF MINES. Downloaded on October 04,2023 at 04:18:37 UTC from IEEE Xplore. Restrictions apply.

1.7.3.1 Circulating harmonic current

The considerations are similar to 1.7.1 except for the possible circulation of third harmonic current between solidly grounded generators if any of the generators do not have two-thirds pitch windings. If generators are of identical design, there will be no significant circulation of third harmonic current while the generators are being operated at identical power and reactive current outputs. If the generators are not of identical design, there will be a third harmonic circulating current. If identical generators are operated with unequal loading, there will be a third harmonic circulating current.

This is demonstrated in Figure 1-28, where two generators are shown solidly connected to a neutral bus (see McFadden). Due to differing electrical parameters and construction details, each generator produces a different amount of third harmonic voltage, e_{31} and e_{23}, at its terminals. As a result a third harmonic current circulates between the generators. The magnitude of this current depends on the third harmonic loop voltage, e_3, and the third harmonic loop impedance, *Z*. Since the generators are solidly connected to the neutral bus, the third harmonic loop impedance can be small. The resulting circulating current produces additional heat in each generator. More important, the zero-sequence third harmonic current circulating through the loop may pick up ground relays causing false tripping of the generator circuit breakers (see McFadden).

Generators with two-thirds pitch windings have the minimum impedance to the flow of third harmonic currents generated elsewhere due to their low zero-sequence impedance.

High-resistance grounding of the generators will adequately limit these harmonic currents. Thus, it is attractive to use high-resistance grounding on the generators, as shown in Figure 1-29, even if there are load feeders directly connected to the generator bus, and to use low-resistance bus grounding to provide selective relaying on the load feeders. Low-resistance grounding of the generators at values not exceeding 25% of generator rating will normally suppress third harmonic current to adequate values even with dissimilar generators, but the variable ground-fault current available with multiple generators may pose a relay-coordination problem.

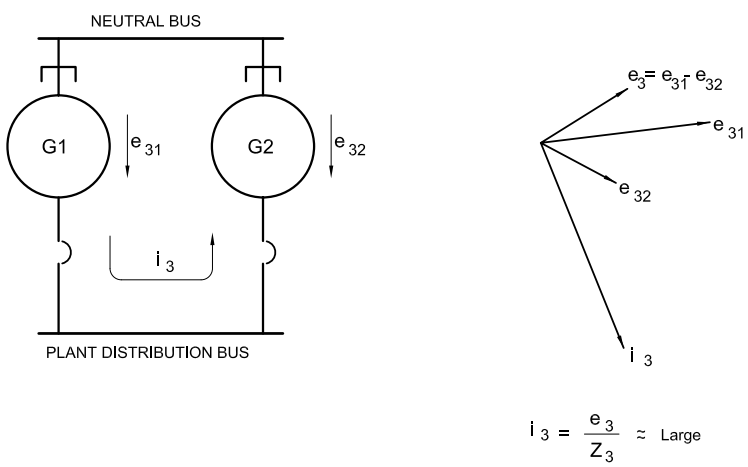

Figure 1-28—Two parallel generators solidly connected to a neutral bus

 Copyright © 2007 IEEE. All rights reserved.

Authorized licensed use limited to: COLORADO SCHOOL OF MINES. Downloaded on October 04,2023 at 04:18:37 UTC from IEEE Xplore. Restrictions apply.

Affordable Wire Management, Exhibit No. EX1019
Case No. IPR2024-00182
Page 52 of 225

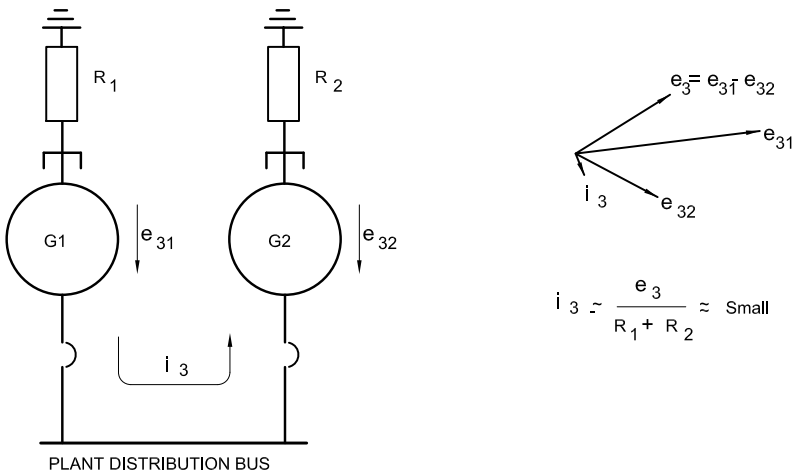

Figure 1-29—Two parallel generators with grounding resistors

1.7.3.2 Ground-fault limitations

NEMA MG 1 places a requirement on the design of synchronous generators that windings shall be braced to withstand the mechanical forces resulting from a bolted three-phase short circuit at the machine terminals. Generator phase currents to ground can actually exceed these three-phase values causing possible machine damage (see Woodbury). This can be illustrated [see Equation (1.2)] by considering a generator with typical per unit impedances of

$$X_1 = X_2 = 0.14 \text{ pu}, X_0 = 0.08 \text{ pu} \tag{1.2}$$

where X_1, X_2, and X_0 are the positive, negative, and zero-sequence reactances, respectively. The three-phase fault current, I_{3ph}, at the generator terminals, as a function of the line to neutral voltage is shown in Equation (1.3):

$$I_{3ph} = E_{LN}/X_1 = 1/0.14 = 7.14 \text{ pu} \tag{1.3}$$

If the generator neutral is solidly grounded, the line-to-ground fault current, I_{SLG}, at its terminals, as given by Equation (1.4):

$$I_{SLG} = 3E_{LN}/(X_1 + X_2 + X_0) = 3/(0.14 + 0.14 + 0.08) = 8.33 \text{ pu} \tag{1.4}$$

The ground-fault current is therefore 8.33/7.14 = 1.17 times the required generator design capability. Since ground faults are more likely to occur than phase faults, they pose a greater potential threat to the system.

If two generators are connected in parallel as shown in Figure 1-30 and only one is solidly grounded, then the ground-fault current increases to 1.91 times three-phase fault current of

Copyright © 2007 IEEE. All rights reserved.

Authorized licensed use limited to: COLORADO SCHOOL OF MINES. Downloaded on October 04,2023 at 04:18:37 UTC from IEEE Xplore. Restrictions apply.
Affordable Wire Management, Exhibit No. EX1019
Case No. IPR2024-00182
Page 53 of 225

one generator. The current in the faulted phase of the grounded generator further increases to 1.27 times the required design value. Both can be seen by considering the phase A current at the fault, as shown in Equation (1.5):

$$I_1 = I_2 = I_0 = 1/(0.07 + 0.07 + 0.08) = 4.545 \text{ pu} \tag{1.5}$$

$$I_a = I_1 + I_2 + I_0 = 13.63 \text{ pu}$$

where I_1, I_2, and I_0 are the positive, negative, and zero-sequence components of the fault current.

In the grounded generator [see Equation (1.6)]:

$$I_0 = 4.545 \text{ pu} \tag{1.6}$$

$$I_1 = I_2 = 4.545/2 \text{ pu}$$

$$I_a = 4.545 + 2(4.545/2) = 9.09 \text{ pu}$$

and the ground-fault current is 13.63/7.14 = 1.91 times the calculated three-phase fault current of one generator. The phase A current in the grounded generator is now 9.09/7.14 = 1.27 times the three-phase faulted level of one generator.

The preceding example provides reasons for not solidly grounding generator neutrals. Where the neutrals are to be grounded, impedance should be added.

Where multiple generator are solidly grounded but have switches in the neutral, there has sometimes been the practice of grounding only one of the generators in parallel to limit ground-fault current duty or circulating third harmonic current. This will increase the fault-current duty in the grounded generator above that for which it would customarily be rated. A chart showing this difference appears in the *Electrical Transmission and Distribution Reference Book*. The ability to switch neutrals appears to invite operational errors that could affect integrity of grounding, allowing overvoltage on four-wire loads, which would result in failure to meet criteria for effective grounding or acceptable reactive grounding and thus would possibly violate the NEC.

1.7.4 Generators as unparalleled alternate sources

This category covers emergency and standby generators that are connected to the loads by transfer switches, which precludes paralleling with the normal source. With three-wire systems, the generators would be considered a separately derived source, since there would be no continuous connection through a system neutral. Generator grounding practices would be guided by 1.7.2 and 1.7.3.

 Copyright © 2007 IEEE. All rights reserved.

Authorized licensed use limited to: COLORADO SCHOOL OF MINES. Downloaded on October 04,2023 at 04:18:37 UTC from IEEE Xplore. Restrictions apply.

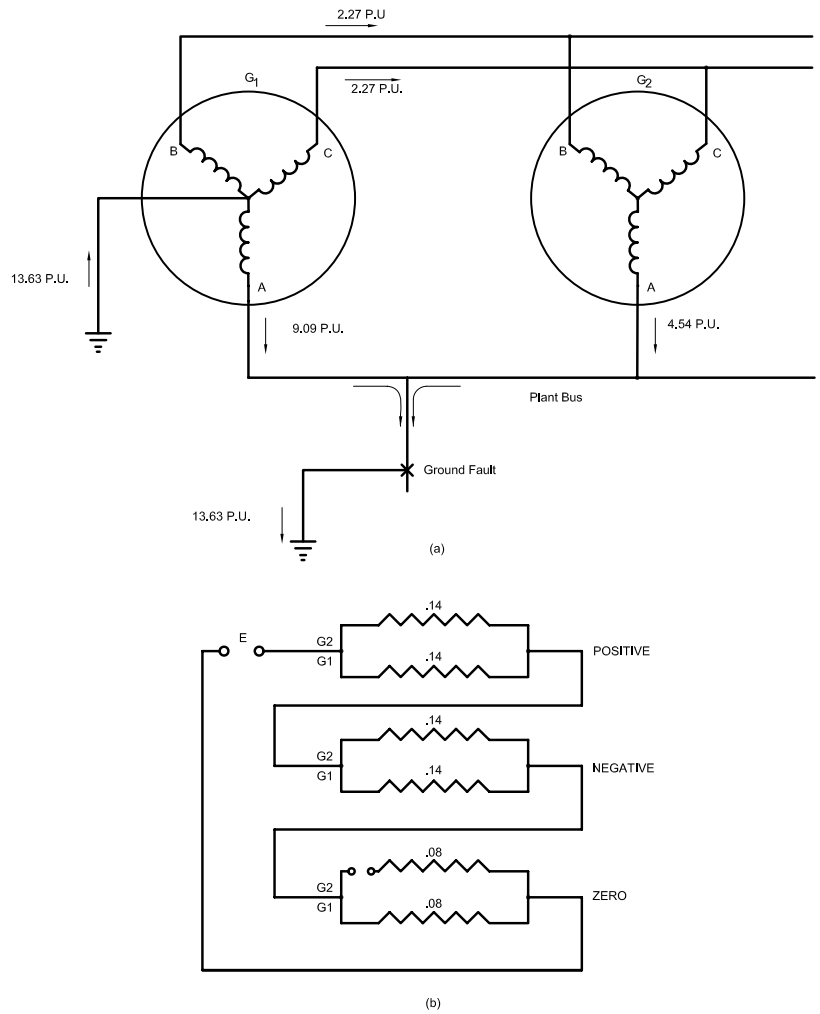

Figure 1-30—Ground fault on a system with two parallel generators

Where four-wire systems are involved, it has been shown in IEEE Std 446™ (*IEEE Orange Book*™), Chapter 7, that objectionable currents can flow if a three-pole transfer switch is used. Whether or not the neutral is grounded at the generator as well as at the normal service, ground-fault relaying errors can occur. The NEC does not require neutral grounding at a generator when it has a common neutral with the grounded utility service neutral conductor. However, this connection scheme will not allow any repair or testing of the normal system, which involves disconnection from ground of the neutral conductor to the generator if the generator is operating. There is the hazard that workers performing such repair, or tests, may not be aware that the generator is operating. The use of a four-pole transfer switch can eliminate these problems and is recommended.

Copyright © 2007 IEEE. All rights reserved.

Authorized licensed use limited to: COLORADO SCHOOL OF MINES. Downloaded on October 04,2023 at 04:18:37 UTC from IEEE Xplore. Restrictions apply.
Affordable Wire Management, Exhibit No. EX1019
Case No. IPR2024-00182
Page 55 of 225

1.7.5 Generators paralleled with other sources

This category describes generators connected to transformers that are, or can be, connected to other power sources. While the primary consideration is the generator grounding, decisions can be affected by the necessity of providing the desired grounding on the other side of the transformer while other generating sources may be disconnected (see Pillai et al.).

The use of a delta-wye transformer, as shown in Figure 1-31, with the wye facing the generator offers the advantage of providing neutral grounding, solid or impedance, to the generator-fed bus when the generator is not connected. It has the disadvantage of not offering grounding to the system connected to the delta side of the transformer. Also, in the event that the transformer is removed from service, an alternate ground source would be needed. It does present a hazard if both the transformer and generator neutrals are solidly grounded (see Nichols).

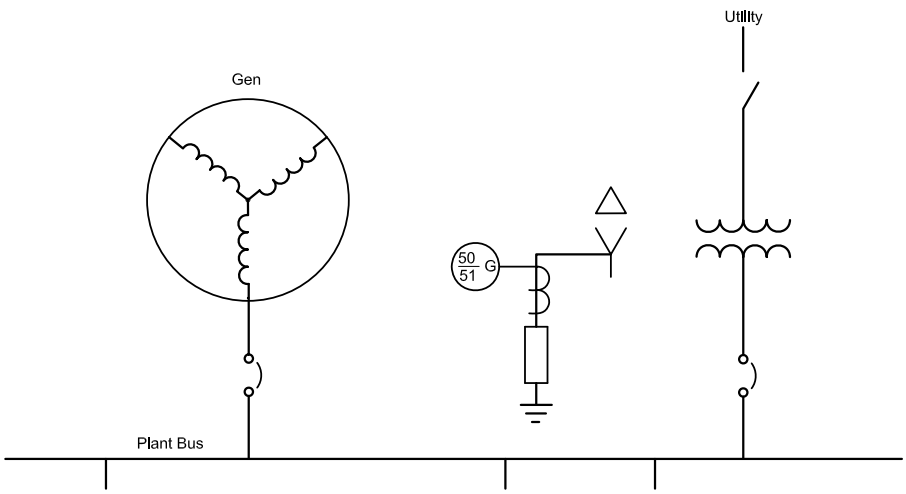

Figure 1-31—Generator in parallel with a transformer

The wye winding with a delta primary is a short circuit to any third harmonic current produced by the generator. The ground-fault duty on the bus will be greater than the arithmetical sum of the ground-fault currents supplied by the transformer and generator when each is connected to the bus independently. The ground-fault current in the generator will exceed that which would occur when the generator is not paralleled. The fault currents must be calculated using symmetrical component techniques as shown in Nichols, rather than simply using the sum of the admittances of the transformer and generator sources. A generator rated for grounded service not otherwise specified is normally rated for the ground-fault current flowing when not paralleled.

A generator neutral reactor can be used to limit the generator-fault duty to an acceptable value as calculated per Nichols, but may not limit any generated third harmonic current to

 Copyright © 2007 IEEE. All rights reserved.

Authorized licensed use limited to: COLORADO SCHOOL OF MINES. Downloaded on October 04,2023 at 04:18:37 UTC from IEEE Xplore. Restrictions apply.

an acceptable value. Thus, suppression of third harmonic may be necessary to facilitate adequate ground-fault relaying.

If the delta of a delta-wye transformer is connected to the generator bus, as shown in Figure 1-32, neutral grounding is available on the wye side of the transformer. However, the generator bus will be ungrounded until such time as the generator is grounded or independent bus grounding is employed. Some type of grounding transformer (wye-delta or zigzag transformer) can be used to produce either effective or impedance grounding of the bus. If a grounding transformer is connected to the bus, the generator may be high-resistance grounded.

A wye-wye transformer as shown in Figure 1-21 can provide grounding to the side opposite the source, whichever side may have the source connected. The disadvantage is that the zero-sequence current must be provided by the source, so that the system grounding required on the other side of the transformer will dictate the type of generator grounding. If a delta tertiary is added to the transformer, this tertiary will supply the zero-sequence current so that the generator can be grounded without regard to system grounding requirements on the other side of the transformer.

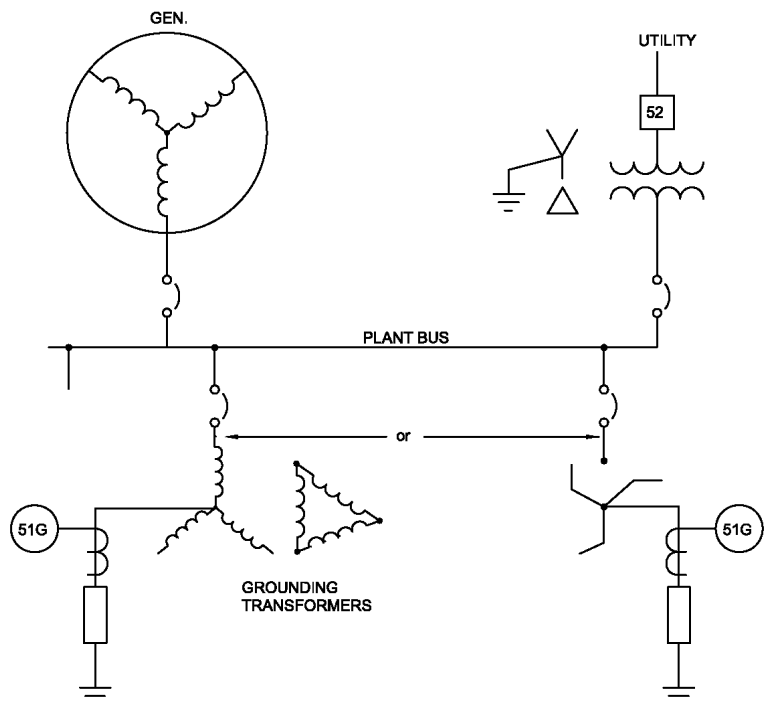

Figure 1-32—Use of grounding transformers in a distribution system

Copyright © 2007 IEEE. All rights reserved.

Authorized licensed use limited to: COLORADO SCHOOL OF MINES. Downloaded on October 04,2023 at 04:18:37 UTC from IEEE Xplore. Restrictions apply.
Affordable Wire Management, Exhibit No. EX1019
Case No. IPR2024-00182
Page 57 of 225

The methods of grounding are also described in IEEE Std C37.101™, which covers generator ground-fault protection as well. It should be noted that this standard was developed primarily for utility generators and does not contain some of the considerations for industrial applications.

1.8 Autotransformers

Occasionally autotransformers will be used to transform voltage, usually to reduce transformer cost, or perhaps to avoid creating a new grounding system. Unless the system grounding is suitable for the use of an autotransformer and the autotransformer is properly applied, its use may seriously reduce grounding and ground relaying effectiveness and expose equipment to a voltage-to-ground level higher than that for which it is designed.

The three-phase wye autotransformer with no delta tertiary has extremely high zero-sequence impedance if no connection is made to its neutral. Figure 1-33 shows that a ground fault at A' will cause the source line-to-ground voltage to be imposed across the A-A' section of the autotransformer. Should that section of the winding be able to support this voltage, then the voltage to ground at N, the neutral of the autotransformer, would rise in proportion to the turns ratio of A'-N to A-A', and B' and C' would have voltages to ground higher than B and C, the high-voltage level. The secondary line-to-line voltage can also be increased.

In normal practice, winding A-A' would not support the full voltage, but would instead saturate, thus passing a certain amount of zero-sequence current. In the process, it will create high-frequency components of voltage, at which frequency the winding can support a voltage proportional to that frequency. Thus, a very high voltage to ground could still exist at N.

Even if the secondary of the autotransformer is the higher voltage, it will still be overvoltage by a secondary line-to-ground fault as shown in Chapter 6 of Beeman. This reference also points out that overvoltages can also be caused by transient surges, such as from switching or lightning, being impressed across the section of winding between the primary and secondary connections.

Figure 1-34 shows that when a source to a step-down autotransformer is impedance grounded, a ground on the source side of the autotransformer can cause the voltage from B' and C' to ground to approach the line-to-line voltage of the source. If the autotransformer steps up the voltage, the voltage to ground on the lower voltage system will lie between that shown in Figure 1-35 and what might be achieved in Figure 1-36, depending upon the relation of the grounding impedance to the exciting impedance of the autotransformer.

 Copyright © 2007 IEEE. All rights reserved.

Authorized licensed use limited to: COLORADO SCHOOL OF MINES. Downloaded on October 04,2023 at 04:18:37 UTC from IEEE Xplore. Restrictions apply.

Affordable Wire Management, Exhibit No. EX1019
Case No. IPR2024-00182
Page 58 of 225

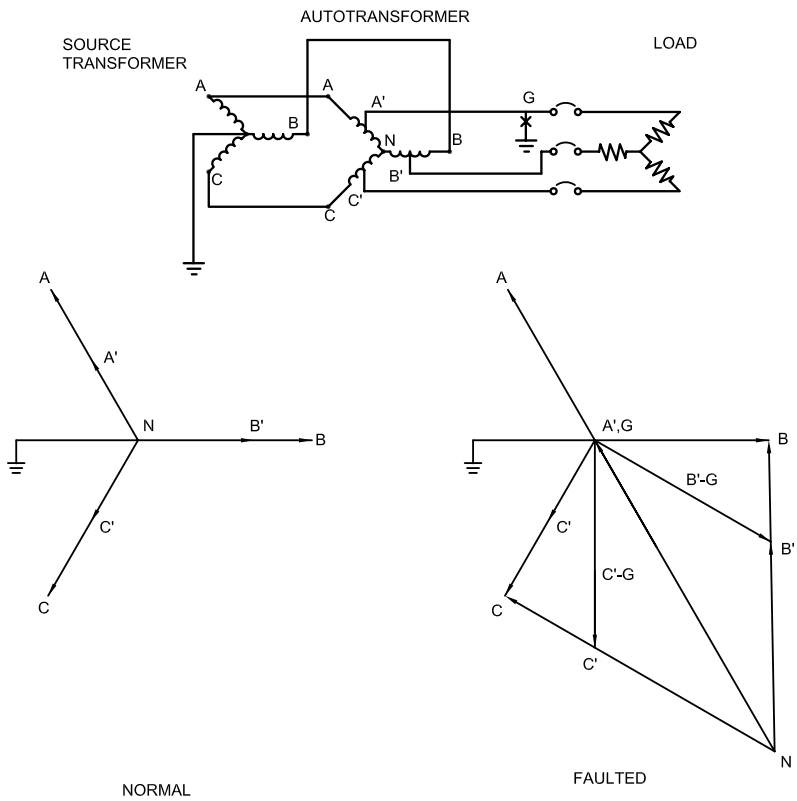

Figure 1-33—Ungrounded wye step-down autotransformer with load fault

Figure 1-36 shows that delta autotransformers do not offer a reduction in voltage to ground on the lower voltage system commensurate with the reduction in phase voltage, thus reducing the cost benefit of choosing the autotransformer rather than a full transformer. The open-delta version offers no reduction in maximum voltage to ground, but does result in an unbalanced voltage to ground that might be undesirable. In neither case do ground faults cause increased voltages to appear across the transformer windings, and line-to-ground voltage at either voltage will not exceed the higher line-to-line voltage. Should a full transformer be used in either case, it might be possible to reduce the class of insulation in the lower voltage system. Like most solidly grounded systems, a large ground-fault current will occur, limited primarily by transformer impedances. The actual voltage drops across the two transformers will have complex relationships depending upon the relative ratings and saturation characteristics of the two transformers. These voltage drops are not necessarily in phase.

Copyright © 2007 IEEE. All rights reserved.

Authorized licensed use limited to: COLORADO SCHOOL OF MINES. Downloaded on October 04,2023 at 04:18:37 UTC from IEEE Xplore. Restrictions apply.

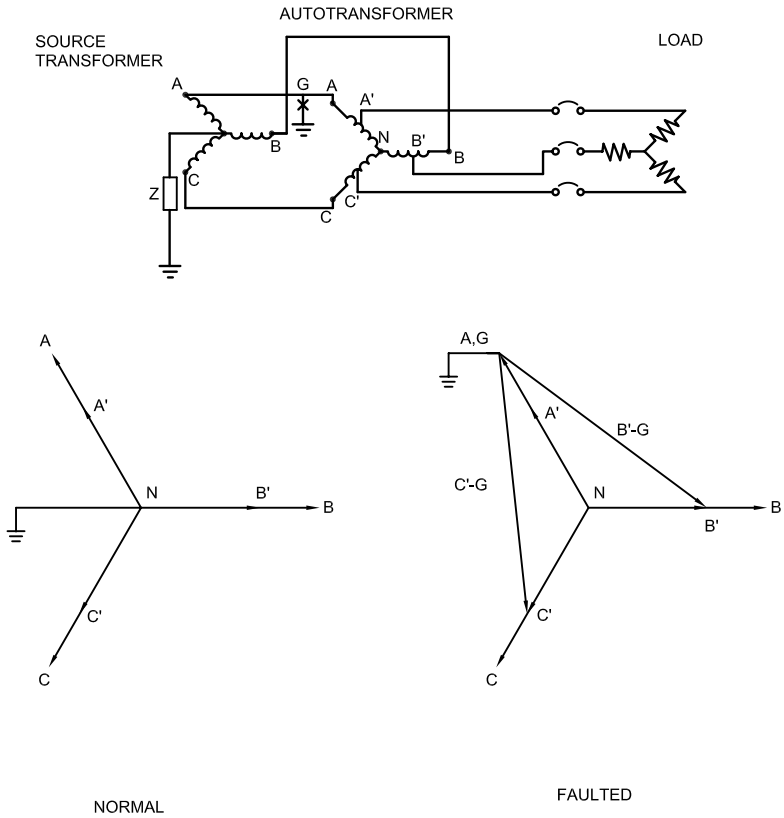

Figure 1-34—Ungrounded wye step-down autotransformer with primary fault

In all the preceding examples there is a safety hazard due to normal perceptions of the relation of maximum voltage to the normal voltage on a circuit. For this reason, the NEC has imposed restrictions as to how autotransformers can be used.

Figure 1-37 shows the correct configuration for using an autotransformer. There must be an effective connection between the neutral of the autotransformer and the neutral of the source transformer for flow of zero-sequence current. In an industrial installation where the NEC would apply, the connection must be made by extending the neutral of the source transformer. No ground connection must be made at the autotransformer to comply with the NEC. A circuit supplied by an autotransformer does not meet the criteria of a separately derived system.

 Copyright © 2007 IEEE. All rights reserved.

Authorized licensed use limited to: COLORADO SCHOOL OF MINES. Downloaded on October 04,2023 at 04:18:37 UTC from IEEE Xplore. Restrictions apply.

Affordable Wire Management, Exhibit No. EX1019
Case No. IPR2024-00182
Page 60 of 225

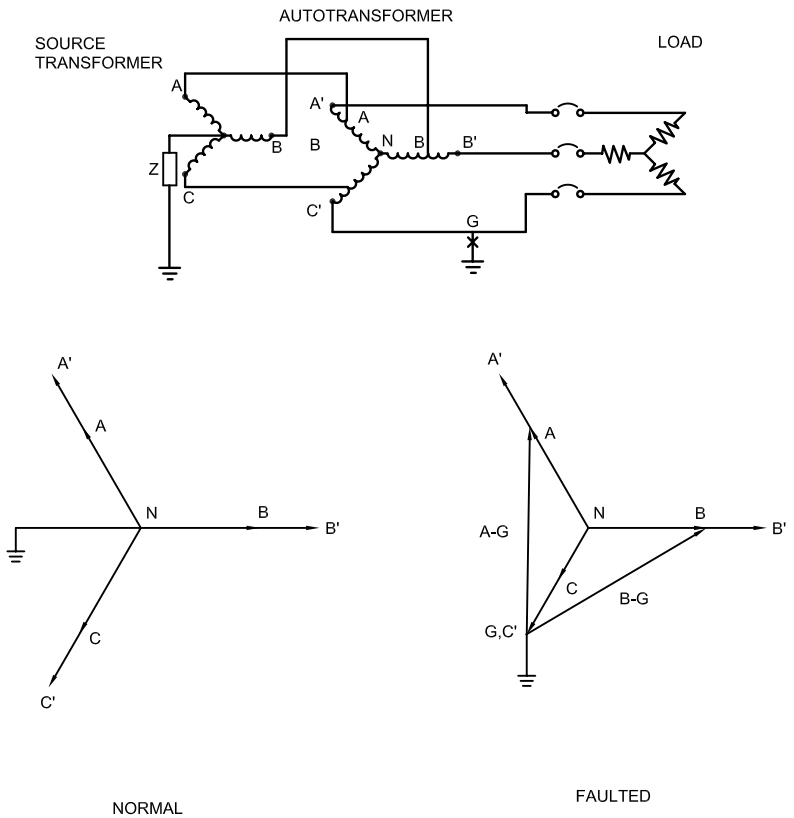

Figure 1-35—Ungrounded wye step-up autotransformer with load fault

Copyright © 2007 IEEE. All rights reserved.

Authorized licensed use limited to: COLORADO SCHOOL OF MINES. Downloaded on October 04,2023 at 04:18:37 UTC from IEEE Xplore. Restrictions apply.

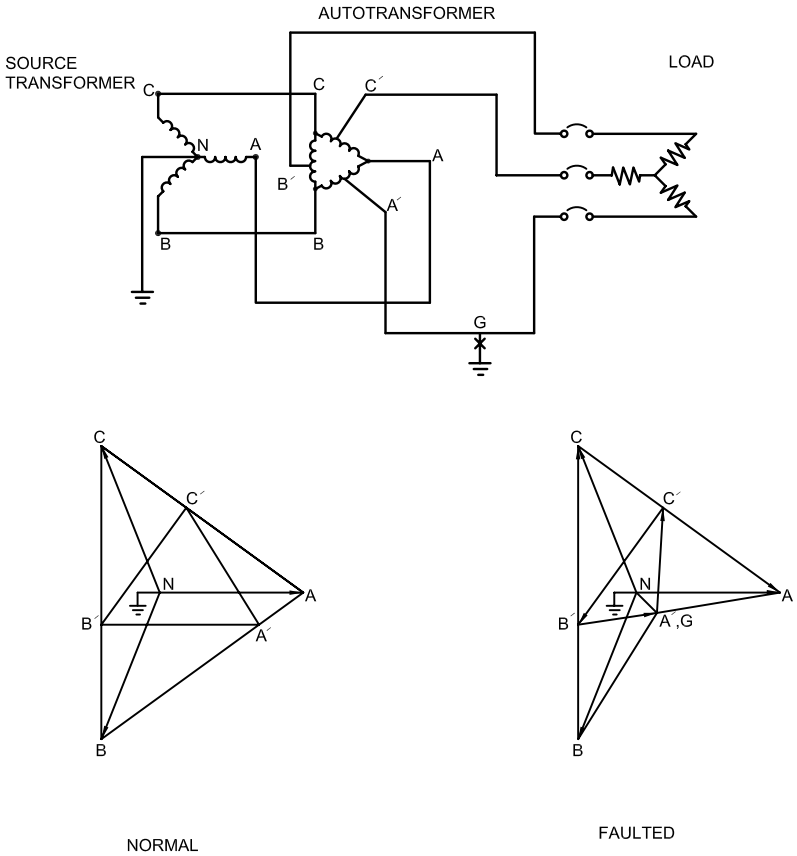

Figure 1-36—Delta autotransformer with load fault

 Copyright © 2007 IEEE. All rights reserved.

Authorized licensed use limited to: COLORADO SCHOOL OF MINES. Downloaded on October 04,2023 at 04:18:37 UTC from IEEE Xplore. Restrictions apply.
Affordable Wire Management, Exhibit No. EX1019
Case No. IPR2024-00182
Page 62 of 225

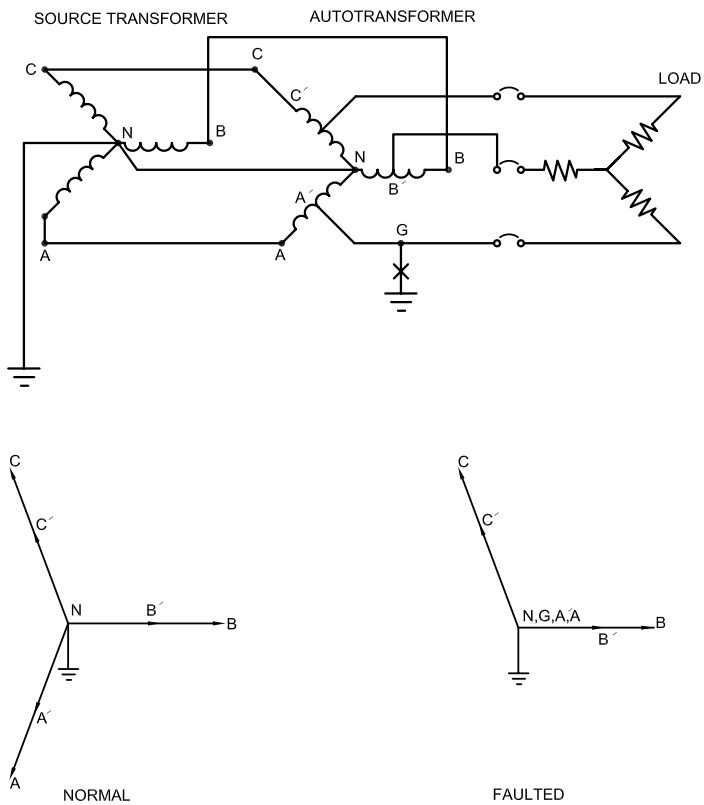

Figure 1-37—Wye autotransformer with grounded neutral, four-wire connection

1.9 System grounding for uninterruptible power systems

1.9.1 General

As with any electrical system, correct grounding of uninterruptible power supplies (UPS) is essential to the overall safety and performance of the system. In particular, personnel safety, equipment protection, and electronic performance can all be jeopardized by incorrect or ineffective grounding.

UPS units come in a variety of configurations (see "System Grounding for Uninterruptible Power Systems"). In typical UPS units, the UPS ac output is electrically isolated from the UPS ac input. However, most practical UPS systems also include one or more bypass arrangements, which, depending on the particular arrangement, makes the UPS system either a separately derived system or not. Three of the potential arrangements are shown in Figure 1-38, Figure 1-39, and Figure 1-40. In these figures, EGCs are shown

Copyright © 2007 IEEE. All rights reserved.

Authorized licensed use limited to: COLORADO SCHOOL OF MINES. Downloaded on October 04,2023 at 04:18:37 UTC from IEEE Xplore. Restrictions apply.
Affordable Wire Management, Exhibit No. EX1019
Case No. IPR2024-00182
Page 63 of 225

supplementing the conduit grounding of the enclosures as is recommended practice when supplying electronic equipment. Battery cabinets are shown, but racks of batteries may also be used with UPS systems. See IEEE Std 1100™ (*IEEE Emerald Book*™) for more information on dc grounding. The UPS are shown as single units but may consist of one or more parallel-connected modules, particularly for larger capacity or redundancy. More elaborate schemes than presented in the three examples may be encountered. Additional wraparound maintenance bypass switching schemes are often added to the basic UPS configurations to facilitate maintenance of the UPS unit while continuing to supply power to the load. For further discussion on UPS systems, see IEEE Std 446™ (*IEEE Orange Book*™) and IEEE Std 1100™.

1.9.2 Separately derived UPS system

Figure 1-38 depicts a conventional static UPS unit whose ac (inverter) output is electrically isolated from the main ac (rectifier) input. The static bypass input is supplied with a three-wire-plus-ground feed from a solidly grounded power system. All three phases of the UPS bypass input are switched by the UPS, and so there is no direct electrical connection between the UPS ac output and another grounded power system. In this configuration, the UPS ac output is a separately derived system. As such, the UPS ac output is grounded in accordance with NEC requirements for separately derived systems. The UPS output neutral is bonded to the EGC and a GEC is connected to the nearest effective grounding electrode. If the UPS output neutral is not correctly connected to the EGC and GEC, the UPS output will not be properly referenced to ground with the resulting uncontrolled voltages to ground. It should be noted that this configuration of UPS grounding, with a three-wire-plus-ground bypass feed, can only be used when the UPS does not serve line-to-neutral loads unless other provisions are made to derive the line-to-neutral voltages when operating the UPS in the bypass mode.

1.9.3 Nonseparately derived UPS system

Figure 1-39 depicts the same conventional static UPS unit shown in Figure 1-38 except that the bypass input is supplied with a four-wire plus ground feed from a solidly grounded power system. This configuration is often encountered when line-to-neutral loads are served directly from the UPS. In this configuration, the UPS output neutral is solidly connected to the grounded bypass neutral. Most UPS units do not switch the bypass and output neutral when the phases are switched. Therefore, the UPS output is not a separately derived system but rather a solidly grounded interconnected system. As such, the UPS neutral may not be connected to the EGC or a GEC. If the UPS output were mistakenly connected to the EGC or GEC, the bypass input power system would be grounded at more than one point. This is an NEC violation and it allows normal neutral currents to flow on the grounding system that can upset electronic equipment and confuse ground-fault protection.

 Copyright © 2007 IEEE. All rights reserved.

Authorized licensed use limited to: COLORADO SCHOOL OF MINES. Downloaded on October 04,2023 at 04:18:37 UTC from IEEE Xplore. Restrictions apply.

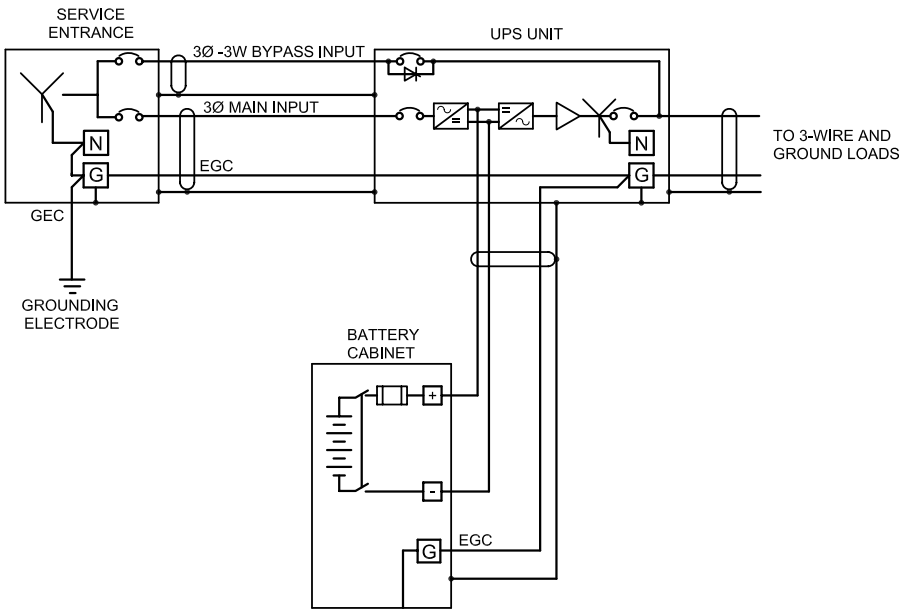

Figure 1-38—Separately derived UPS system

When the UPS is configured as a nonseparately derived system (a solidly grounded interconnected system), a ground fault on the output of the UPS must return to the UPS neutral by way of the upstream system (service entrance) neutral-to-ground bond and, as such, may trip upstream ground-fault protection devices. This confusion of the ground-fault protection devices is also described in IEEE Std 446 (*IEEE Orange Book*), Chapter 7, for the configuration of a three-pole transfer switch supplying four-wire loads.

1.9.4 Separately derived UPS system serving four-wire loads

Figure 1-40 depicts the same conventional static UPS unit serving four-wire loads as shown in Figure 1-39, except that the UPS bypass input is supplied from a bypass transformer that isolates the four-wire plus ground bypass feed to the UPS and allows the UPS system to be separately derived. This configuration is useful to provide power source grounding (neutral-to-ground bond) close to the loads, which is recommended for electronic loads. The neutral-to-ground bond can be located at the UPS output or at the bypass transformer, but not both.

Copyright © 2007 IEEE. All rights reserved.

Authorized licensed use limited to: COLORADO SCHOOL OF MINES. Downloaded on October 04,2023 at 04:18:37 UTC from IEEE Xplore. Restrictions apply.
Affordable Wire Management, Exhibit No. EX1019
Case No. IPR2024-00182
Page 65 of 225

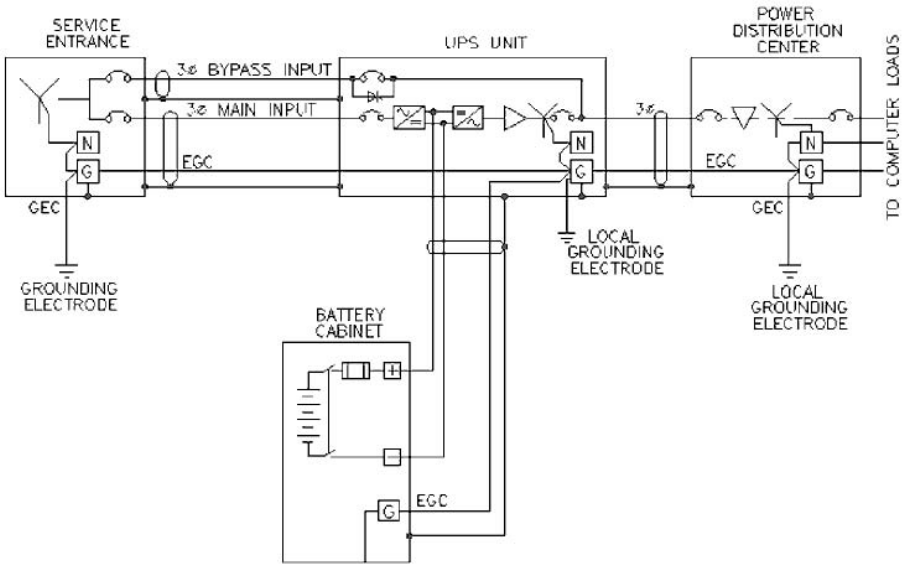

Figure 1-39—Nonseparately derived UPS system

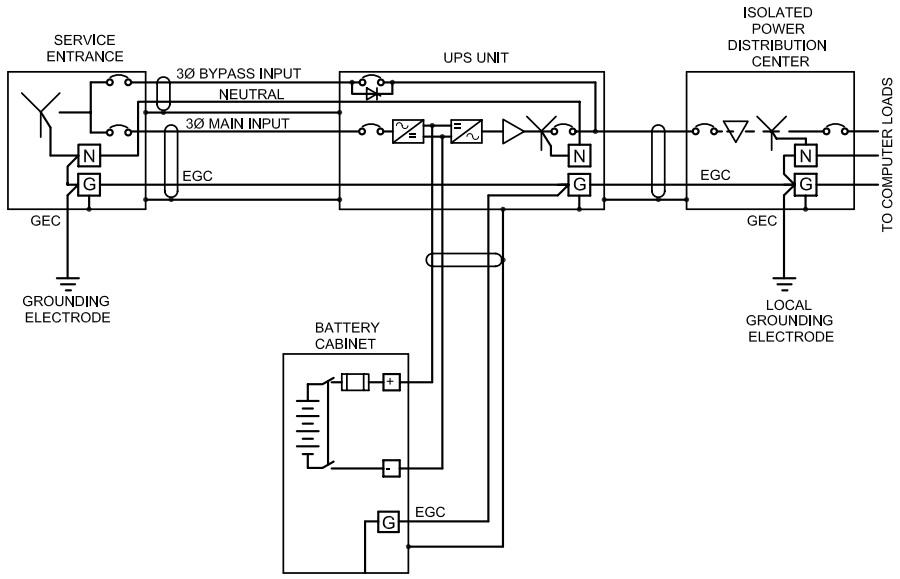

Figure 1-40—Separately derived UPS system serving four-wire plus ground loads

 Copyright © 2007 IEEE. All rights reserved.

Authorized licensed use limited to: COLORADO SCHOOL OF MINES. Downloaded on October 04,2023 at 04:18:37 UTC from IEEE Xplore. Restrictions apply.

Affordable Wire Management, Exhibit No. EX1019
Case No. IPR2024-00182
Page 66 of 225

1.10 Portable mining equipment supply systems

The concept of protecting mine electrical equipment and personnel by suitable grounding has existed since electricity was first introduced into mines. As early as 1916, the U.S. Bureau of Mines recommended equipment frame grounding as a means of preventing electrical shock to miners working on or around electrical equipment (see Clark and Means). Adequate grounding has been a difficult problem for the mining industry, sometimes more complex and challenging than for other industries. Hazards associated with ground faults are amplified by the portable and mobile nature of these power systems, and system and equipment grounding are interrelated. A surface-mine machine can have a substantial power demand (e.g., 15 MW) at potentials up to 25 kV or greater. The power demand of an underground mining machine can exceed 1100 hp at potentials up to 4160 V. The portable equipment must be designed to permit personnel to approach (and touch) apparatus structures without risk of electric shock. This subclause will emphasize the grounding aspects of the supply system, whereas, Chapter 2 will cover related equipment-grounding information. Morley provides extensive details about both subjects.

A simplified arrangement of a mine power system is shown in Figure 1-41. Substations are employed to transform the incoming utility voltage to a distribution level. Mine distribution is almost always expanded radial, and overhead lines (surface mines) or cables (surface and underground mines) are used to supply switchhouses (portable switchgear) located near load concentrations. In typical underground mines, switchhouses are connected via portable cables to portable power centers, which supply lower voltage through trailing cables to the utilization equipment (e.g., continuous miners, long walls, load-haul-dump units). In surface mines, large utilization equipment, such as shovels and draglines, are often powered at the distribution voltage, and a trailing cable completes the power circuit from the switchhouse to the machine. (As with underground mines, portable substations or power centers are used when distribution and utilization levels are different.)

The recommended grounding technique for these portable or mobile equipment applications is a safety ground system that employs resistance grounding. Figure 1-41 illustrates the concept (overload and short-circuit protection are not shown for clarity of the grounding systems and associated protective relaying). The substation contains two separate ground beds (station ground, safety ground), maintained some distance apart. Substation surge arrestors, fencing, and equipment frames are tied to the station ground bed, typically located under the substation area. The substation transformer is either delta-wye, delta-delta, or wye-delta connected (wye-wye is not recommended), and the secondary neutral (direct or derived) is tied to the safety ground bed through the neutral grounding resistor. Each ac equipment frame in the distribution system is connected via grounding conductors to the safety ground bed. The station ground bed is intended to handle lightning, other transformer primary surge conditions, and primary-system line-to-ground faults. The purpose of the safety bed is maintaining equipment frames at near earth potential, and a low bed resistance is important so dangerous potentials are not developed on machine frames.

Copyright © 2007 IEEE. All rights reserved.

Authorized licensed use limited to: COLORADO SCHOOL OF MINES. Downloaded on October 04,2023 at 04:18:37 UTC from IEEE Xplore. Restrictions apply.
Affordable Wire Management, Exhibit No. EX1019
Case No. IPR2024-00182
Page 67 of 225

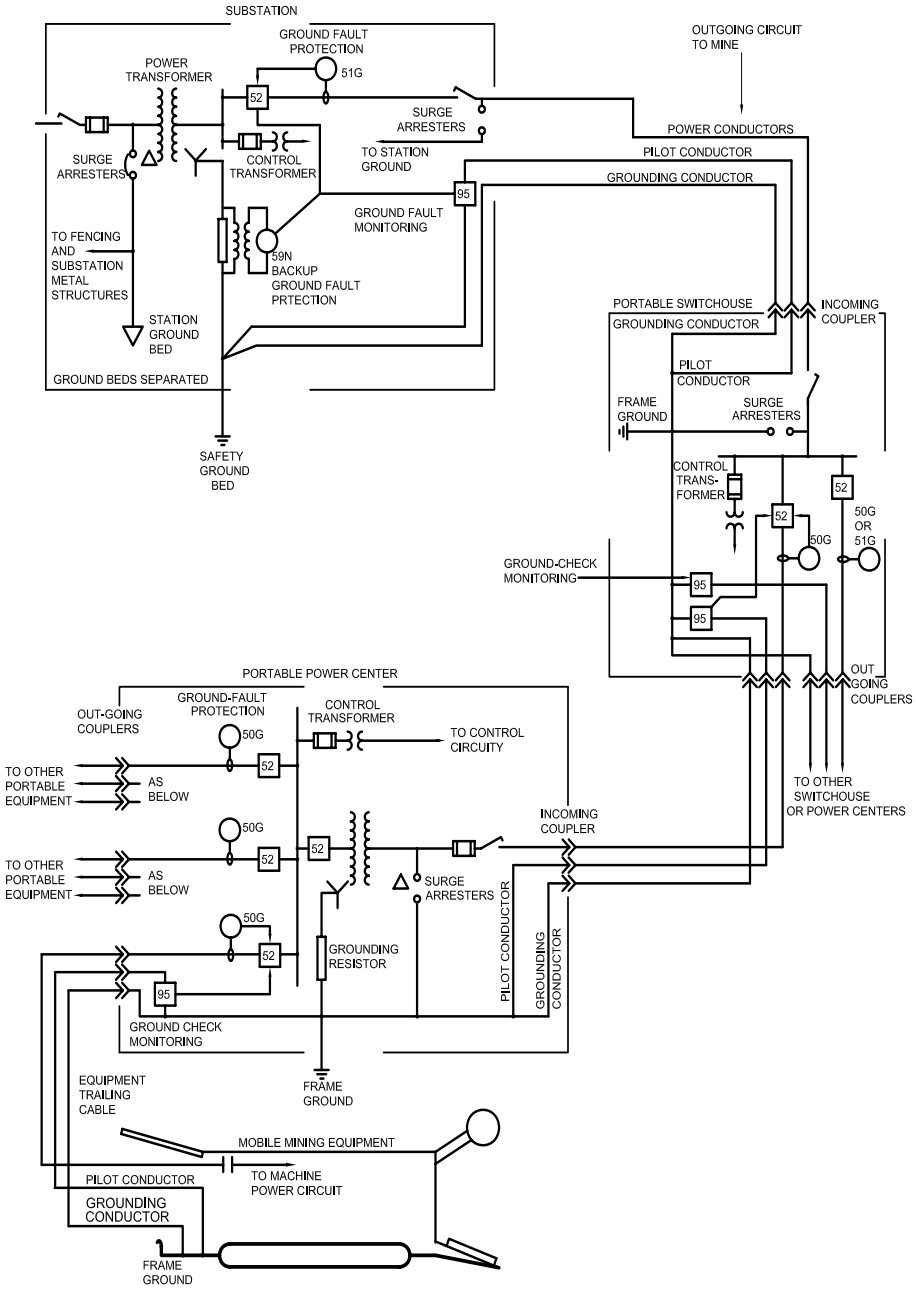

Figure 1-41—Simplified mine system with a safety grounded system (overcurrent and short-circuit schemes have been omitted)

 Copyright © 2007 IEEE. All rights reserved.

Authorized licensed use limited to: COLORADO SCHOOL OF MINES. Downloaded on October 04,2023 at 04:18:37 UTC from IEEE Xplore. Restrictions apply.

Affordable Wire Management, Exhibit No. EX1019
Case No. IPR2024-00182
Page 68 of 225

Separation between the system and safety ground beds is needed to isolate high system-ground voltage rise (a temporary rise of 5 kV or more is not unusual) from the bed. This resistance is recommended as 5.0 ohm or less (see Lord; King). It is not unusual to find that a much greater distance is required to provide needed separation (see Cooley and King). The design of these ground beds is complex, and many variables must be examined to derive an optimum configuration (see Cooley; Cooley and King). The references cited in this paragraph should be consulted. IEEE Std 367 also contains important information about ground-bed separation in regard to the influence of a ground potential rise of a ground electrode.

At each transformation step within the distribution system, such as in a portable power center, an additional neutral point is established at the transformer secondary. The neutral is tied through a grounding resistor to the equipment frame and, thus, via the grounding conductors to the safety ground bed.

Because of the extensive use of cable distribution and the attendant capacitance from line-to-ground, ground-fault current limits are higher than that which was recommended for high-resistance grounding earlier in this chapter. U.S. practice specifies a different maximum current limit depending on the system voltage. When the system voltage is greater than 1000 V, ground current is limited so frame potentials within that system portion do not exceed 100 V during ground-fault conditions. For practical purposes (assuming a 2 ohm grounding conductor impedance), this restricts the maximum ground-current limit to not more than 50 A; however, most substations serving mines use a 25 A ground-current limit. For power system segments at or below 1000 V, the ground-current limit must be 25 A or less, but typical practice is 15 A. Distribution and utilization (mining) equipment in surface mines is typically greater than 1000 V. Underground mine distribution is almost always greater than 1000 V, whereas mining equipment is usually 1000 V or less.

Correct selection and coordination of protective circuitry are essential to the safety ground system. Regardless of where a ground fault occurs, ground-fault current is primarily limited by the grounding resistor, and selective coordination at each voltage level by the pickup setting alone is normally impossible. The common ground-fault relaying pickup is 40% of the ground-current limit, and time settings are relied on for multistage protection. Regulations should be consulted before selecting specific ground-fault protection schemes. (See Morley; Carson and Vidergar). A typical relaying arrangement is included in Figure 1-41 (see Morley).

Zero-sequence relaying (usually instantaneous) establishes primary ground-fault protection for the outgoing power conductors to the mine. Although not shown, backup protection may be employed (or required) at the portable power center by adding a time delayed zero-sequence relay to sense potential across the grounding resistor. For the distribution system, primary ground-fault protection in the switchhouse establishes a zone of protection for each outgoing circuit; again, zero-sequence relaying (instantaneous or minimum time dial setting) is typically used. Time delayed zero-sequence or residual relaying in the substation gives both backup protection for downstream relaying within the distribution safety ground. U.S. federal regulations specify separation by distance; for example, a minimum of 7.6 m (25 ft) and a “low resistance” for each system and primary

Copyright © 2007 IEEE. All rights reserved.

Authorized licensed use limited to: COLORADO SCHOOL OF MINES. Downloaded on October 04,2023 at 04:18:37 UTC from IEEE Xplore. Restrictions apply.

Affordable Wire Management, Exhibit No. EX1019
Case No. IPR2024-00182
Page 69 of 225

ground-fault protection for the zone between its location and the switchhouse. The potential relaying shown about the grounding resistor also provides backup protection (both relays are sometimes required in the substation). In order for the safety ground system to be effective, grounding conductors must be continuous, and ground-check monitors (relays) are used to verify continuity. Pilot conductors are shown with each monitor, but these are not needed in instances where pilotless relays are applied. All these sensors act to trip the associated circuit interrupter and remove all power to the affected system segment.

The correct operation of the safety ground system relies on three concepts, as follows:

a) The earth cannot be used as a grounding conductor.

b) The grounding system serving portable and mobile equipment must be kept isolated.

c) Ground-fault protection must be provided on each outgoing circuit from the substation.

These criteria are sometimes difficult to achieve when other loads are being supplied from a mine substation transformer, such as preparation plants and ventilation fans. Regardless, each is particularly important when an underground mine is connected to the substation. To ensure grounding-system integrity, it is best that underground mine distribution be fed from a separate transformer secondary winding.

1.11 Creation of stray currents and potentials

If a current-carrying conductor, even though nominally at ground potential, is connected to earth at more than one location, part of the load current will flow through the earth because it is then in parallel with the grounded conductor. Since there is impedance in both the conductor and the earth, a voltage drop will occur both along the earth and the conductor. Most of the voltage drop in the earth will occur in the vicinity of the point of connection to earth, as explained in Chapter 4. Because of this nonlinear voltage drop in the earth, most of the earth will be at a different potential than the grounded conductor due to the load current flowing from this conductor to earth.

An EGC connected to the same electrode as the grounded load conductor will also have a potential difference from most of the earth due to the potential drop caused by the load current. In most instances the potential difference will be too low to present a shock hazard to persons or affect operation of conventional electrical load equipment. However, in many instances it has been of sufficient level to be detected by livestock, either by coming in contact with non-current-carrying enclosures to which an EGC is connected, or where sufficient difference in potential exists between the earth contacts of the different hoofs. Although potential levels may not be life threatening to the livestock, it has been reported that as little as 0.5 V rms can affect milk production (see Dick).

The NEC requires that the grounded circuit conductor (neutral) of a single system be connected to a different grounding electrode each time it enters a separate building when a separate EGC has not been installed with the phase conductors. In this case, where there is

 Copyright © 2007 IEEE. All rights reserved.

Authorized licensed use limited to: COLORADO SCHOOL OF MINES. Downloaded on October 04,2023 at 04:18:37 UTC from IEEE Xplore. Restrictions apply.

a multi-building facility, as is common on farms, there will be some load currents flowing in the earth due to these multiple groundings.

If a separate EGC is run to each building and grounded, then any installed grounded circuit conductor shall not be connected to the EGC or to the grounding electrodes(s). Since no load current would be flowing into these grounding electrodes, the EGC should be at earth potential.

Another possible source of multigrounding of a neutral would be the use of the neutral for grounding of the frames of cooking ranges or clothes dryers, previously permitted in the NEC. If the appliance frame also has a separate connection to earth, the multigrounding of the neutral will be achieved. This practice should be avoided in the vicinity of the barns and even at other locations on farms.

There is another condition of multigrounding, since the utility will ground the neutral at the supply transformer and it must be grounded again at the service entrance. Since the EGC has its origin at the service entrance ground, it will have a potential to earth as a function of the voltage drop created by load current in the earth in parallel with the service drop neutral current. The magnitude of this potential will be affected by the size and length of the service drop neutral, the magnitude of the neutral current, and the resistance to earth of the service entrance grounding electrode as well as other connections to earth of the EGC. These factors are all subject to some control.

It is recommended that sources of stray currents on the premises that can be created by grounding of the neutral at other than the service entrance should be eliminated. Do not ground the neutral except at the service entrance. Make regular checks of electrical circuits and equipment to assure that unintentional grounding of either line or neutral has not occurred due to insulation failures. It is also recommended that voltages, caused by current in the service drop neutral, be minimized by balancing loads to minimize neutral current. All loads creating irregular currents, such as motors, should not be connected line-to-neutral.

There is a remaining source of circulating current when the utility distribution circuit includes a multigrounded neutral. The grounding of the supply-transformer secondary neutral has often been made common with the grounding of the primary neutral. It has been established that there may be a potential difference between this primary neutral and earth and that there may be primary load current flowing through the ground (see Stetson, Bodman, and Shull; Surbrook and Reese; Prothero, DeNardo, and Lukecart; Dick). This will be affected by the neutral current, the location on the distribution feeder, and the effectiveness of the various ground electrodes.

Neutral-to-ground voltages injected into the user system from the utility primary neutral cannot be eliminated by system grounding techniques on the premises, although some reduction may be achieved if the service entrance ground is made extremely effective and is located at some distance from livestock facilities. There are active systems to counteract equipment-to-ground voltages produced by utility injections (see Dick). Also, used are so-called equipotential ground planes, which bring earth surface voltages to the same value as

Copyright © 2007 IEEE. All rights reserved.

Authorized licensed use limited to: COLORADO SCHOOL OF MINES. Downloaded on October 04,2023 at 04:18:37 UTC from IEEE Xplore. Restrictions apply.

that of equipment (see Dick). Both of these are out of the scope of system grounding, but are mentioned for reader reference.

1.12 Avoiding common-mode noise

When all of the conductors of a signal or power system have an identical potential difference with respect to another reference, this potential is known as a *common-mode voltage* or *signal*. If such voltage or signal is undesirable, it is usually called *noise*. The other references are usually the equipment enclosure or the ground, both of which may be at the same potential. Electronic equipment may often exhibit a susceptibility to common-mode noise between the incoming power conductors and ground, which may affect either digital or analog signals.

Common-mode noise on a power source occurs when a potential difference exists between the ground to which the power source is referenced and the ground to which the power-consuming equipment is referenced. There is often a capacitive or resistive coupling between the equipment's circuitry and its enclosure. The potential difference can be created when there is a current flow in the EGC, or the earth, between the equipment enclosure and the power source grounding.

The earth has many stray currents, resulting in small potential differences between points. These currents may be other than power frequencies, and even if power frequencies, may contain transients or bursts due to switching or other aberrations. Therefore, if the equipment cabinet is connected to earth at its location, any potential occurring between there and the power system grounding point can be coupled into the circuitry.

The equipment enclosure can be maintained at the same potential as the power system ground if the EGC is of low impedance and has no connection to earth except at the grounding point of the source transformer, the so-called *single-point ground.* This is allowed by the NEC and is incorrectly referred to there as an isolated ground outlet or IG. The receptacle is supplied by an insulated EGC, and in IEEE Std 1100 (*IEEE Emerald Book*) it is referred to as an insulated grounding receptacle or IGR. The earth potential difference between the source grounding point and the equipment must not be sufficient to develop a shock hazard to persons standing within reach, and must not present the possibility of resistively or capacitively coupling this potential into the equipment enclosure at a magnitude sufficient to create a noise problem. Normally, meeting all these criteria is possible only if the equipment is physically and electrically close to the source transformer.

Connection of the equipment ground to earth with an electrode that is physically separate from all other power system and structural grounding electrodes and is not bonded to any of these other grounding electrodes, will inevitably produce common-mode noise, since it is not referenced to the power source ground. The magnitude of this common-mode potential can be destructive to the equipment and hazardous to personnel, since a power system fault can raise the power system or structure several hundred or thousand volts above other earth references. This grounding method is in violation of the NEC.

 Copyright © 2007 IEEE. All rights reserved.

Authorized licensed use limited to: COLORADO SCHOOL OF MINES. Downloaded on October 04,2023 at 04:18:37 UTC from IEEE Xplore. Restrictions apply.

For greater detail on the grounding of equipment, refer to Chapter 5 of this standard and IEEE Std 1100 (*IEEE Emerald Book*).

1.13 Limiting transferred earth potentials

The term *transferred earth potentials* refers to the voltage to earth of grounding systems that will appear on conductors as a result of the source system grounding electrode being above normal earth potential. The larger voltages are usually developed by ground-fault currents returning to their source through earth. A common example is a ground fault of a conductor, which is supplying a substation transformer primary to the station ground grid that is used for grounding of the transformer secondary neutral. If this grounding grid is not connected to the high-voltage source system ground, there can be a significant voltage rise above earth as the fault current flows into the earth. Low-voltage conductors leaving the area where the ground or grounding electrode voltage has been affected will have that voltage added to their normal line-to-ground voltage. The total voltage may exceed the insulating rating of the conductors or the equipment to which they are connected.

Control and telephone circuits extend into areas where the grounding electrode or mat is subject to significant voltage rise are particularly vulnerable. High voltage appearing on such circuits is more likely to be a hazard to personnel and to exceed insulating ratings. Such conductors should not interconnect between two areas whose ground mat potential is not held equal unless special protection or isolation is applied to the low-voltage circuits. Another hazard can be created when portable or mobile equipment can be subjected to a transferred voltage rise. This is specifically treated in 1.11 as well as in the NEC.

Transferred potentials will be reduced if the resistance to earth or impedance between grounding grids is held to minimum. Isolation between low-voltage equipment at locations having unequal ground potentials can be accomplished by use of devices rejecting common-mode voltages (see IEEE Std 487™). Such devices include isolation transformers, optical isolators, and similar devices to protect telecommunication cables going into high-voltage environment against transferred potentials (see Shipp and Nichols; IEEE Std 487).

Within most industrial distribution systems, compliance with the NEC requirements for EGCs and the running of the grounding conductor to the service entrance panel serve to limit such potentials to safe limits. If there are areas that are interconnected by three-wire overhead lines only, bonding provisions should be made before interconnecting low-voltage circuits between the two areas.

Low-voltage potential differences can be created by the flow of load or other small currents through ground or grounding conductors. These can be quite troublesome to livestock, as discussed in 1.12. It can also be troublesome to electronic equipment, particularly if the equipment is susceptible to common-mode voltages on the power supply conductors or common-mode voltages on communication lines that may run between locations with different earth potentials. Existing NEC grounding requirements designed to prevent the flow of load currents through grounding paths are often not adequate because of the vulnerability to their very low levels and because the voltages can

Copyright © 2007 IEEE. All rights reserved.

Authorized licensed use limited to: COLORADO SCHOOL OF MINES. Downloaded on October 04,2023 at 04:18:37 UTC from IEEE Xplore. Restrictions apply.

be caused by other phenomena. These problems are further discussed in Chapter 5 of this standard and in IEEE Std 1100 (*IEEE Emerald Book*). Further information is also available in Shipp and Nichols.

1.14 "Resonantly" produced voltages

This term is applied to the voltage that will appear at the junction between reactances of opposite sign connected in series even though the reactances may not actually be resonant at the supply frequency. The variance of the voltage with respect to the supply voltage will be a function of how close the elements are to resonance and the ratio (Q) of inductive reactance to the resistance.

A common instance is the use of series capacitors on low power factor loads where random switching or other variations create objectionable voltage excursions. Figure 1-42 represents the circuit of a spot welder whose inductance is fixed by the dimensions of the machine but whose resistive load can be varied. With full power factor correction, the voltage rise across the capacitor will be 1.732E at 0.5 power factor and 4.9E at 0.2 power factor. With the ground fault as shown, this 4.9E across the capacitor will be impressed between the source transformer and ground. Both the transformer and its grounding impedance will be subjected to overvoltage. For this reason, such series capacitors should be used only on effectively grounded systems, which will limit the voltage rise to safe values.

A more commonly observed series reactance circuit is created when a capacitive load is connected, usually for power factor and/or voltage correction. Since these capacitors are in series with the source reactance of the power system, the voltage is caused to rise. The voltage rise caused by the normal size of power factor capacitors would not be expected to exceed 5% to 10% under the worst conditions, since the system is not approaching resonance at the fundamental power frequency. This is not a different voltage class and does not present a hazard. Its discussion here is only to present a familiar example of reactances in series.

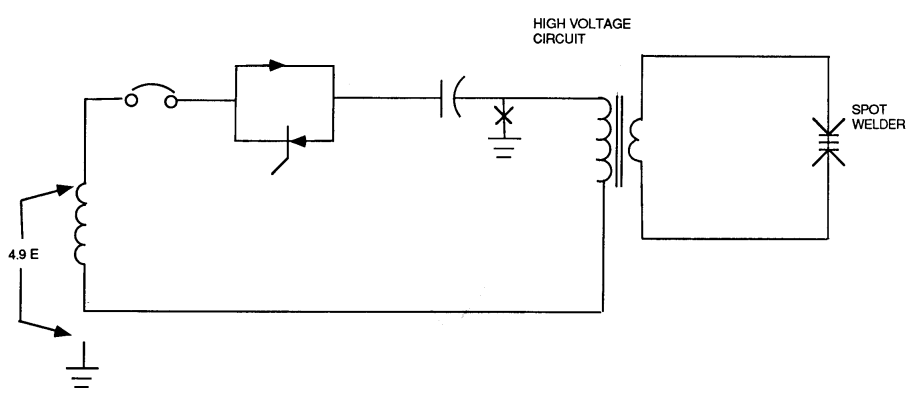

Figure 1-42—Series capacitor welder

 Copyright © 2007 IEEE. All rights reserved.

Authorized licensed use limited to: COLORADO SCHOOL OF MINES. Downloaded on October 04,2023 at 04:18:37 UTC from IEEE Xplore. Restrictions apply.

Resonance can be achieved, at multiples of the power system frequency, by the addition of power factor capacitors. When there are sources of harmonics, such as nonlinear loads, the resulting harmonic voltages can be raised by a resonant condition. Such voltages would not normally reach hazardous values. A hazardous level, should it occur, would be rapidly reduced by overcurrents in the capacitors causing failures or fuse operations, thus detuning the circuit.

Impulse voltages can be amplified and extended as damped oscillations (ringing) by resonant circuits. These voltages can exceed insulation capabilities.

Resonant conditions prone to continuous oscillation due to lack of resistive loading (damping) can be triggered by switching or by system failures. The most common example is that created by single-phase switching of transformer primaries when there is no secondary load. This produces the *ferroresonant* condition where the excitation impedance of the transformer interacts with the capacitance of the primary cable.

These resonantly produced voltages are not considered useful system voltages, with the exception of the resistance welder application. Thus, they do not create multi-voltage systems, but are discussed here so that they might be avoided. With the exception of increasing the impulse capability of the insulation, the main defense against these voltages is suppression.

There are other situations where high voltages can be produced by inadvertently created resonant conditions. These are usually the result of insulation, equipment failures, or unintended circuit configurations. The voltages are more extreme if conditions at or close to resonance are achieved. When the inductive element has an iron core, the inductance can vary when the iron is saturated due to the high voltage, which at the same time causes nonsinusoidal current with resulting harmonics. This can result in arriving at a resonant condition referred to as *ferroresonance.* These are not “system voltages” as have been discussed in the preceding paragraphs, since they are unintended and may be transitory in nature.

In some cases, occurrence of these voltages can be affected or eliminated by the grounding design, but such changes in voltage also may involve choice of transformer design or performance of switching devices. A common cause of ferroresonance is the impressing of voltage across a transformer winding and a conductor capacitance to ground, the conductor having been disconnected from its normal source. If the transformer is wye connected, grounding of the neutral will usually prevent voltage being impressed across this series connection. A resonant condition produced by a grounded coil acting in series with the line-to-ground capacitance of an ungrounded system can be alleviated if the capacitance is shunted by grounding the system.

Copyright © 2007 IEEE. All rights reserved.

Authorized licensed use limited to: COLORADO SCHOOL OF MINES. Downloaded on October 04,2023 at 04:18:37 UTC from IEEE Xplore. Restrictions apply.

Affordable Wire Management, Exhibit No. EX1019
Case No. IPR2024-00182
Page 75 of 225

1.15 Grounding of dc power systems

1.15.1 General

Although there are some exceptions, the majority of dc power systems used in industrial and commercial applications today are limited size, special purpose systems. The grounding practices for these various systems are largely a function of the use of the particular system. Several varieties of systems and their usual grounding practices are described in this subclause.

1.15.2 NEC requirements

The NEC requires the grounding of two-wire dc systems feeding premises wiring, operating at greater than 50 V, but not greater than 300 V, with the following three exceptions:

1) A system equipped with a ground detector and supplying only industrial equipment in limited areas.
2) A rectifier-supplied dc system derived from an ac system complying with specific requirements.
3) DC fire alarm circuits having a maximum current of 0.030 A.

Note that many of the dc systems used in industrial and commercial installations are derived using rectifiers from properly grounded ac systems, and thus fall under Exception 2. Others may fall under Exception 1. Also, power systems for railways and mines are outside the scope of the NEC. However, nothing in the NEC prohibits grounding of these systems; as an option, they may be left ungrounded if one or more of the exceptions applies.

The NEC requires that the neutral conductor of all three-wire dc systems feeding premises wiring be grounded. No exceptions are permitted.

1.15.3 General purpose dc lighting and power systems

Although seldom found in recent construction, some general purpose dc lighting and power systems exist in industrial and commercial installations. Where these systems do exist, they should be solidly grounded in accordance with the NEC, as described in 1.15.2.

1.15.4 Station battery systems

Station battery systems are used as the control power source for switchgear and for process control instrumentation. In addition, the station battery may be used for emergency lighting and other emergency power requirements, such as bearing lube oil pumps for rotating machinery or valve actuators for critical valves. Station battery systems are operated ungrounded and usually have a ground detector. The ground detector may be lamps, voltmeter(s), or alarm relay(s). The ground detector is frequently furnished as an optional part of the battery charger.

 Copyright © 2007 IEEE. All rights reserved.

Authorized licensed use limited to: COLORADO SCHOOL OF MINES. Downloaded on October 04,2023 at 04:18:37 UTC from IEEE Xplore. Restrictions apply.

1.15.5 Electrochemical systems

Electrochemical cell lines are used for the separation of chemicals or metals from raw materials or from materials produced as an intermediate step in the process. Additionally, electrochemical cell lines may be used to provide corrosion and abrasive resistance or to change surface appearance. Typical uses are the production of chlorine and sodium chlorate, and the refining of aluminum, magnesium, and copper. In general, the cells are connected in series-parallel configurations and are supplied from rectifiers or dc generators. Voltages may be as high as 1200 V and currents as high as 400 kA. Higher currents are found in the chlorine industry and higher voltages in the aluminum industry.

Electrochemical lines are generally operated ungrounded. Line-to-ground voltages are monitored so that grounds may be detected and removed before a second ground occurs. Some higher voltage dc pot lines in aluminum smelters may be grounded through a fuse, which is monitored. The fuse blows on the first occurrence of a ground fault, and an alarm is sounded.

Operators and maintenance personnel ordinarily work on electrochemical systems while the system is energized. Safety information may be found in IEEE Std 463™-2006 [B10].

1.15.6 UPS systems dc link

Refer to 1.9 for information on grounding of UPS systems, including the dc link.

1.15.7 Solar photovoltaic systems

The NEC addresses the grounding of solar photovoltaic systems. For a photovoltaic power source, the NEC requires that one conductor of a two-wire dc system over 50 V and the neutral conductor of three-wire dc systems be grounded. An exception states, “Other methods that accomplish equivalent system protection and that utilize equipment listed and identified for the use shall be permitted.” The NEC states that the direct-current circuit grounding connection shall be made at any single point on the photovoltaic output circuit.

1.15.8 Mining power systems

Refer to 1.10 for information on grounding of mining power systems, including the dc portion of those systems.

1.15.9 Transit power systems

Transit power systems are a special class of dc power systems. Special consideration must be given to both system and equipment grounding. The method of grounding has a significant impact on personnel safety and equipment performance. Problems associated with grounding can include hazards to the general public, hazards to operating and maintenance personnel, communication system interference, corrosion of steel, and shortened equipment life. As transit systems by their nature interface with the general public, it is essential that special care be given to the methods of grounding these systems.

Copyright © 2007 IEEE. All rights reserved.

Authorized licensed use limited to: COLORADO SCHOOL OF MINES. Downloaded on October 04,2023 at 04:18:37 UTC from IEEE Xplore. Restrictions apply.

Transit systems vary by type of system and location or access to the right-of-way. In choosing a grounding system, the designer must be cognizant of these differences.

Due to the power requirements, the vast majority of heavy rail transit systems are *third rail* systems. The third rail is usually at a positive dc voltage with respect to the running rails. The running rails are used for the negative return to the substations. Typically, the running rails are not intentionally grounded to reduce stray ground current.

Light rail and streetcar systems usually operate with a positive overhead trolley wire and use the running rails as a negative return.

Typically, people mover systems and certain light rail systems use vehicles with rubber wheels. These systems use two power rails and usually operate with a resistive ground detection system.

Electric bus systems use double overhead conductors and usually use a resistive ground detection system similar to isolated power rail systems.

Traction power systems are further classified by the access to the right of way they use. This is an important factor in designing the system grounding because it will determine whether the general public has access to the tracks, and it will dictate the need for special stray current control such as in a steel tunnel liner.

Underground systems are either bored or constructed using the cut and cover method. In either case, the final result is usually a tunnel of reinforced concrete. In some under-river systems a steel tube is also used. The electric system designer and track support designer must be cognizant of the construction type and understand the current paths and their possibly corrosive effects.

Surface systems are further divided by the type of highway crossings used. If the system has road crossings that are at grade level, then the same precautions that apply to street running systems must be taken, as the general public will have access to the running rails. All systems with grade crossings must use overhead power conductors.

Elevated systems present a different challenge to the system designer. With a massive steel structure in place, the stray current paths must be considered so corrosion will be minimized.

Street running systems must be designed with step and touch potentials of the running tracks given special attention.

Fixed guideway is another form of dedicated right-of-way but is usually a cast concrete structure of some type.

Isolated or ungrounded traction systems have no intentional ground reference. *Intentional* is the operative word in this sentence. Several miles of track laid on ground does create a reference of usually low impedance to ground. There are several methods of laying the

 Copyright © 2007 IEEE. All rights reserved.

Authorized licensed use limited to: COLORADO SCHOOL OF MINES. Downloaded on October 04,2023 at 04:18:37 UTC from IEEE Xplore. Restrictions apply.

running rails. The electric system designer should be aware of this and the effect of ground currents and of step and touch potentials in an isolated ground system.

Grounded rail systems have an intentional ground reference established, usually by the ground grids at the substations. These systems can then bond structures along the right-of-way to the rail system to reduce the step and touch potentials. This method of grounding is usually only applicable to light duty streetcar systems with no railroad signaling that requires an isolated running rail system.

Some systems operate normally as ungrounded systems, with the running rails monitored by ground rise monitors in passenger stations and other areas accessible to the public. If the running rail rises to a certain voltage relative to the surrounding grounded structures a grounding contactor will close temporarily, connecting the running rails to the structure grounding system.

1.15.10 Stray currents in transit power systems

While dc current theory is generally considered rather simple, the dynamics of traction power systems create some significant problems. These systems are characterized by the following:

a) High load current (1 kA to 10 kA)
b) Moving loads
c) Large land areas
d) A negative return conductor embedded in the earth.

These features all contribute to stray currents, which are defined as currents returning to the source by any path other than the intended conductor. These other paths may be the following:

1) The earth
2) Nearby power lines
3) Utility lines in parallel with the system
4) Steel building structures
5) Pipelines

The amount of stray current is dependent on the impedance of the return paths. These impedances are determined by the following:

— Track construction
— Soil conditions
— The arrangement and construction of nearby pipelines, buildings, utility power lines, and other man-made structures
— Bonding between rail sections

Stray currents cause problems in various ways. These include the following:

— Electrolysis of building steel and pipes

Copyright © 2007 IEEE. All rights reserved.

Authorized licensed use limited to: COLORADO SCHOOL OF MINES. Downloaded on October 04,2023 at 04:18:37 UTC from IEEE Xplore. Restrictions apply.

— Overheating of utility lines
— Running rail corrosion
— Interference with communication systems

Mitigation of stray current is best done in the initial design of the traction power system. The primary mitigation method is to construct the track system with low impedance and isolated from other ground reference. The problem with this is that the better the isolation, reducing the stray currents, the higher the risk of dangerous step and touch potentials. Most systems today are built with welded steel rails that provide good bonding and low impedance. The transit cars are referenced to the same potential as the rails. This requires some thought to be put into passenger station design to eliminate hard grounds such as guardrails or floor grates on the station platforms. It is important to isolate the utility ground system from the running rails. This can sometimes be a problem because many transit systems are built on multiple use rights-of-way that include a utility line. The placement of utility grounds from surge arresters and transformer neutrals is important. If the utility is using transformers with solidly grounded primaries, significant amounts of current can travel through the transformer windings to the phase conductors and to the next transformer. Since this is a dc current, it can cause saturation of the transformers and serious damage due to overheating. Line overheating may also be a problem, due to the excessive current.

Stray current in structures does not necessarily cause problems. The problem areas are usually the entrance and exit points. As the current passes from the steel structure to the earth, electrolysis can occur, causing significant corrosion of metal. This can be mitigated by connecting bonding (drainage) cables to the steel members. The drainage cables are connected to the negative bus in the substation and each drainage circuit should include a diode to prevent reverse current flow.

1.15.11 DC surge arresters

Surge arresters are used in dc transit systems for the same reason surge arresters are used in ac systems—to clamp a voltage rise at a level the equipment can withstand and to dissipate the energy in the voltage peak.

Care and planning are required in the selection of the location of dc arresters. Considerations are the following:

a) Length of leads
b) Proximity to protected equipment
c) Isolation from ac ground grids, especially if the ac primary is not solidly grounded
d) Isolation of ground leads from ungrounded structure

1.16 Normative references

The following referenced documents are indispensable for the application of this document (i.e., they must be understood and used, so each referenced document is cited in the text and its relationship to this document is explained). For dated references, only the

 Copyright © 2007 IEEE. All rights reserved.

Authorized licensed use limited to: COLORADO SCHOOL OF MINES. Downloaded on October 04,2023 at 04:18:37 UTC from IEEE Xplore. Restrictions apply.

edition cited applies. For undated references, the latest edition of the referenced document (including any amendments or corrigenda) applies.

Baker, D. S., "Charging Current Data for Guesswork-Free Design of High Resistance Grounded Systems," *IEEE Transactions on Industry Applications,* vol. IA-15, no. 2, pp. 136–140, March/April 1979.

Beeman, D. L., Ed., *Industrial Power Systems Handbook.* New York: McGraw-Hill, 1955.

Carson, D. B., and Vidergar, J. A., "Considerations of Ground Fault Protection as Influenced by the Occupational Safety and Health Act and the Mining Enforcement and Safety Administration," *IEEE Transactions on Industry Applications,* vol. IA-11, no. 67, p. 108, November/December 1975.

Clark, H. H., and Means, C. M., "Suggested Safety Rules for Installing and Using Electrical Equipment in Bituminous Coal Mines," T. P. 138, U.S. Bureau of Mines, Washington, DC, 1916.

Cooley, W. H., and Hill, H. W., Jr., "Coupling of Mine Grounds to Surface Grounds," *IEEE Transactions on Industry Applications,* vol. IA-22, no 2, March/April 1986, p. 360.

Cooley, W. L., "Design Considerations Regarding Separation of Mine Safety Ground and Substation Ground Systems," *IEEE IAS Conference Record,* Annual Meeting, October 1977.

Cooley, W. L., and King, R. L., "Guide to Substation Grounding and Bonding in Mine Power Systems," IC8835, 1980.

Dick, W. K., and Winter, D. F., "Computation, Measurement and Mitigation of Neutral-to-Earth Potentials on Electrical Distribution Systems," *IEEE Transactions on Power Delivery,* vol. PWRD-2, no. 2, April 1987.

Electrical Transmission and Distribution Reference Book, 4th Edition, Westinghouse Electric Corp., Chapters 2 and 6.

Foster J. W., Brown W. O., and Pryor, L. A., "High Resistance Grounding in the Cement Industry—A User's Experience," *IEEE Transactions On Industrial Applications*, vol. IA-22, no. 2, March/April 1986, pp. 304–309.

IEEE Std 367, IEEE Recommended Practice for Determining the Electric Power Station Ground Potential Rise and Induced Voltage from a Power Fault.[4, 5]

[4]IEEE publications are available from the Institute of Electrical and Electronics Engineers, 445 Hoes Lane, P.O. Box 1331, Piscataway, NJ 08855-1331, USA (http://standards.ieee.org/).

[5]The IEEE standards or products referred to in this clause are trademarks of the Institute of Electrical and Electronics Engineers, Inc.

Copyright © 2007 IEEE. All rights reserved.

Authorized licensed use limited to: COLORADO SCHOOL OF MINES. Downloaded on October 04,2023 at 04:18:37 UTC from IEEE Xplore. Restrictions apply.

IEEE Std 399, IEEE Recommended Practice for Power System Analysis (*IEEE Brown Book*).

IEEE Std 446, IEEE Recommended Practice for Emergency and Standby Power Systems for Industrial and Commercial Applications (*IEEE Orange Book*).

IEEE Std 487, IEEE Recommended Practice for the Protection of Wireline Communication Facilities Serving Electric Supply Locations.

IEEE Std 1100, IEEE Recommended Practice for Powering and Grounding Electronic (*IEEE Emerald Book*).

IEEE Std C37.101, IEEE Guide for Generator Ground Protection.

King, R. L., et al., *Guide for Construction of Driven-Rod Ground Beds*, IC8767. Washington, DC: U.S. Bureau of Mines, 1978.

Lordi, A. C. "How to Safely Ground Mine Power Systems," *Coal Age,* vol. 68, no. 9, September 1963, pp. 110–117.

McFadden R. H., "Grounding of Generators Connected to Industrial Plant Distribution Buses," *IEEE Transactions On Industry Applications*, vol. IA-17, no. 6, November/ December1981, pp. 553–556.

Morley, L. A., *Mine Power Systems,* IC9258. Washington, DC: U.S. Bureau of Mines, 1990.

NEMA MG 1 1993, Motors and Generators, Part 22.[6]

NFPA 70, National Electrical Code® (NEC®).[7]

Nichols, N., "The Electrical Considerations in Cogeneration," *IEEE Transactions on Industry Applications,* vol. 1A-21, no. 3, May/June 1985.

Pillai et al., "Grounding and Ground Fault Protection of Multiple Generator Installations on Medium-Voltage Industrial and Commercial Power Systems—Part 1: The Problem Defined; Part 2: Grounding Methods; Part 3: Protection Methods; Part 4 Conclusion and Bibliography," Working Group Reports, *IEEE Transactions on Industry Applications,* vol. 40, no. 1, January/February 2004, pp. 11–32.

Prothero, J. N., DeNardo, C. M., and Lukecart, B. W., "Primary Neutral-to-Earth Voltage Levels as Affected by System Grounding, Neutral Separation and Load Balancing," *IEEE IAS Conference Record,* October 1989.

[6]NEMA publications are available from Global Engineering Documents, 15 Inverness Way East, Englewood, Colorado 80112, USA (http://global.ihs.com/).

[7]NFPA publications are available from Publications Sales, National Fire Protection Association, 1 Batterymarch Park, P.O. Box 9101, Quincy, MA 02269-9101, USA (http://www.nfpa.org/).

 Copyright © 2007 IEEE. All rights reserved.

Authorized licensed use limited to: COLORADO SCHOOL OF MINES. Downloaded on October 04,2023 at 04:18:37 UTC from IEEE Xplore. Restrictions apply.

Shipp, D. D., and Nichols, N., "Designing to Avoid Hazardous Transferred Earth Potentials," *IEEE Transactions on Industry Applications,* vol. 1A-18, no. 4, July/August 1982.

Stetson, L. E., Bodman, G. R., and Shull, H., "An Analog Model of Neutral-to-Earth Voltages in a Single-phase Distribution System," *IEEE Transactions on Industry Applications,* vol. IA-20, no. 2, March/April 1984.

Surbrook, T. C., and Reese, N. D., "Trouble Shooting Earth to Neutral Voltage," *IEEE IAS Conference Record,* October 1989.

"System Grounding for Uninterruptible Power Systems," Liebert Corporation, Publication No. PLT-41, October 1986.

Woodbury F. A., "Grounding Considerations in Cogeneration," *IEEE Transactions On Industry Applications*, vol. IA-21, no. 6, November/December 1985, pp. 1523–1532.

1.17 Bibliography

[B1] AIEE Committee Report, "Recommended Grounding Practices for Single Polarity DC Structures," October 1957, pp. 784–790.

[B2] Bridger, B., Jr., "High Resistance Grounding," *IEEE Transactions on Industry Applications,* vol. IA-19, no. 1, January/February 1983, pp. 15–21.

[B3] Castenschiold, R., "Grounding of Alternate Power Sources," IEEE Conference Record 77 CHG 1246-B-IA, October 1977, pp. 92–99.

[B4] Eisele, H., "Grounding in DC Traction Substations," *American Public Transportation Association Rapid (APTA) Transit Conference*, 1982.

[B5] Forquer, P. F., "Equipment Grounding in DC Traction Substations," *American Public Transportation Association Rapid (APTA) Transit Conference*, 1993.

[B6] Gustafson, R. J., and Albertson, V. D., "Neutral-to-Earth Voltage and Ground Current Effects in Livestock Facilities," *IEEE Transactions on Power Apparatus and Systems,* vol. PAS-10, no. 7, July 1982, p. 2090.

[B7] Hoffman, D. C., "Grounding of DC Structures and Enclosures," *AIEE Winter General Meeting,* New York, NY, 1961.

[B8] IEEE 100, *The Authoritative Dictionary of IEEE Standards Terms,* Seventh Edition. New York: Institute of Electrical and Electronics Engineers.

[B9] IEEE Std 242™-2001, IEEE Recommended Practice for Protection and Coordination of Industrial and Commercial Power Systems (*IEEE Buff Book*™).

Copyright © 2007 IEEE. All rights reserved.

Authorized licensed use limited to: COLORADO SCHOOL OF MINES. Downloaded on October 04,2023 at 04:18:37 UTC from IEEE Xplore. Restrictions apply.

[B10] IEEE Std 463™-2006, IEEE Standard for Electrical Safety Practices in Electrolytic Cell Line Working Zones.

[B11] Kaufmann, R. H., and Page, J. C., "Arcing Fault Protection for Low-Voltage Power Distribution Systems," *AIEE Transactions on Power Apparatus and Systems,* vol. 79, June 1960, pp. 160-167.

[B12] Rowe, E., "Compact Substations for Trolley Bus and Light Rail Transit Applications," *American Public Transportation Association Rapid (APTA) Transit Conference*, 1992.

[B13] Surbrook, T. R., Reese, N. D., and Althouse, J. R., "Parameters Affecting Neutral-to-Earth Voltage Along Primary Distribution Circuits," *IEEE Transactions on Industry Applications,* vol. 24, no. 5, September/October 1988.

[B14] Wagner, C. L., "Effect of Grounding Impedance on the Magnitude of Transient Overvoltage Due to Arcing Grounds," *Electric Utility Engineering Report,* no. 60-166, Westinghouse Electric Corp., June 14, 1960.

[B15] Wagner, C. L., Ferguson, W. H., and Nordman, D. A., "High Resistance Grounding for Unit-Connected Generators," *Electric Utility Engineering Report,* no. 59-58, Westinghouse Electric Corp., February 27, 1959.

[B16] Zipse, D. W., "Multiple Neutral-to-Ground Connections," *IEEE I&CPS Technical Conference,* May 1972, pp. 60-64.

 Copyright © 2007 IEEE. All rights reserved.

Authorized licensed use limited to: COLORADO SCHOOL OF MINES. Downloaded on October 04,2023 at 04:18:37 UTC from IEEE Xplore. Restrictions apply.

Chapter 2
Equipment grounding

2.1 Basic objectives

2.1.1 Overview

This chapter provides fundamental concepts and recommended procedures for equipment grounding of power apparatus, wiring systems, interior and exterior substations, and utilization equipment.

2.1.2 General

The term *equipment grounding* includes the *equipment grounding conductor* (EGC) and refers to the interconnection (bonding) and grounding of the nonelectrical metallic elements of a system. The term *system grounding* (as covered in Chapter 1) may include a grounded conductor and is part of the power distribution system. The need for an EGC exists for high-impedance, low-impedance, and effectively grounded systems as well as for ungrounded systems. Examples of components of the equipment grounding system are metallic raceways, motor frames, equipment enclosures, and a grounding conductor (wire). The requirements for equipment grounding are expressly specified in the National Electrical Code® (NEC®) NFPA 70[1] as follows:

a) Conductive materials enclosing electrical conductors or equipment, or forming part of such equipment, shall be connected to earth so as to limit the voltage to ground on these materials. Where the electrical system is required to be grounded, these materials shall be connected together and to the supply system grounded conductor.

b) Where the electrical system is not solidly grounded, these materials shall be connected together in a manner that establishes an effective path for fault current.

c) Electrically conductive materials that are likely to become energized shall be bonded to the supply system grounded conductor or, in the case of an ungrounded electrical system, to the electrical system grounded equipment, in a manner that establishes an effective path for fault current.

d) The earth shall not be used as the sole EGC or fault current path.

The basic objectives of an equipment grounding system are the following:

1) To reduce electric shock hazard to personnel.

2) To provide adequate current-carrying capability, both in magnitude and duration, to accept the ground-fault current permitted by the overcurrent protection system without creating a fire or explosive hazard to building or contents.

3) To provide a low-impedance return path for ground-fault current necessary for the timely operation of the overcurrent protection system.

[1]Information on references can be found in 2.10.

Copyright © 2007 IEEE. All rights reserved.

Authorized licensed use limited to: COLORADO SCHOOL OF MINES. Downloaded on October 04,2023 at 04:18:37 UTC from IEEE Xplore. Restrictions apply.

2.1.3 Electric-shock exposure

Electric shock injuries result from contact with metallic components that are energized (see Gienger and Lloyd), whether intentionally or unintentionally. Effective equipment grounding practices can minimize these personal injuries.

A breakdown of insulation can cause accidental contact between an energized electrical conductor and the metal frame that encloses it. Such contact tends to energize the frame to the voltage level of the conductor. Safety considerations require that the level of the shock-hazard voltage be minimized as much as possible to a less hazardous level. The equipment grounding system should do this by forming a low-impedance path to ground.

The impedance of the grounding conductor must be low enough to accept the available line-to-ground-fault current without creating a hazardous impedance (*IZ*) voltage drop. The available ground-fault current of the supply system will have a direct bearing on the EGC requirements.

2.1.4 Thermal capability

The grounding conductor must also function to conduct the available ground-fault current (magnitude and duration) without excessive temperature rise or arcing. The use of a large cross-section grounding conductor is not enough. All parts of the fault circuit, including the terminations and other parts, must be capable of carrying the fault current without distress. The installation must also provide a lower impedance fault return path than other possible parallel paths that may have inadequate current-carrying capacity.

Summaries of large-loss fires indicate that approximately one out of four fires in manufacturing establishments originates in electrical systems (see Redding and O'Brien).

Whether the magnitude of electrical systems contributions to fires or not, it is apparent that fires can and do originate in electrical systems. Effective design, installation, and maintenance of equipment grounding systems are a vital element in reducing these fire hazards.

Joints and connectors are critical components of the fault return path. Good workmanship is essential to a safe system and must be demanded. Supervision of installation, inspection, and proper maintenance should assure that the grounding system is not compromised. The use of a supplementary (redundant wire) EGC, in addition to metallic conduit, where used, is recommended to assure the continuity of the equipment grounding system.

One critical connection is the locknut connection between metallic raceway or cable and the sheet-metal enclosure. Particular assurance that this connection be made and maintained clean and tight is imperative. A grounding bushing, as required by the NEC for services and systems of over 250 V to ground, with its terminal bonded to an adequate terminal within the enclosure, is recommended for all applications.

 Copyright © 2007 IEEE. All rights reserved.

Authorized licensed use limited to: COLORADO SCHOOL OF MINES. Downloaded on October 04,2023 at 04:18:37 UTC from IEEE Xplore. Restrictions apply.

2.1.5 Overcurrent protection operation

The equipment ground system is an essential part of the overcurrent protection system. The overcurrent protection system requires a low-impedance ground-return path in order to operate promptly and properly (see NEC). The earth ground system is rarely of low enough impedance and is not intended to provide an adequate return path. The impedance of the grounding conductor must be low enough that sufficient ground-fault current will flow to operate the overcurrent protective device and clear the fault rapidly.

In ac applications, it is the total impedance (R + jX) that controls the current division among paralleled paths. In 60 Hz circuits rated 40 A or less, the circuit reactance (jX) is an insignificant part of the circuit impedance. Because reactance increases significantly with conductor separation, reactance is the predominant element of impedance for open wire and tray systems for circuits rated above 200 A (see Figure 2-1). For cable systems or conductors in conduit with close proximity, reactance is a significant component of impedance for circuits rated over 200 A. The reactance of an ac circuit is determined mainly by the spacing between outgoing and return conductors and is only slightly affected by conductor size (see Figure 2-1). The circuit resistance is directly affected by conductor size. This means that the ratio of X/R and the relative effect of reactance on circuit impedance increases as the conductor size increases.

NOTE—Increased separation spacing between grounding and phase conductors increases not only the reactance X_g of the grounding conductor but also the zero-sequence reactance X_o of the phase conductors.[2]

In 60 Hz ac circuits rated above 40 A, it becomes mandatory that the installed grounding conductor be physically placed to present a much lower reactance than other less capable parallel paths. The manner in which this is achieved is treated in 2.2.

2.2 Fundamental concepts

2.2.1 Single wire as a grounding conductor

To help develop an understanding of the behavior pattern of a single wire as a grounding conductor, see Figure 2-2. A constant current source is assumed with conductor impedance small with respect to the source impedance. (For an expanded treatment of single line-to-ground fault behavior, see Kaufmann, “Important Functions Performed.”)

[2]Notes in text, tables, and figures are given for information only and do not contain requirements needed to implement the standard.

Copyright © 2007 IEEE. All rights reserved.

Authorized licensed use limited to: COLORADO SCHOOL OF MINES. Downloaded on October 04,2023 at 04:18:37 UTC from IEEE Xplore. Restrictions apply.

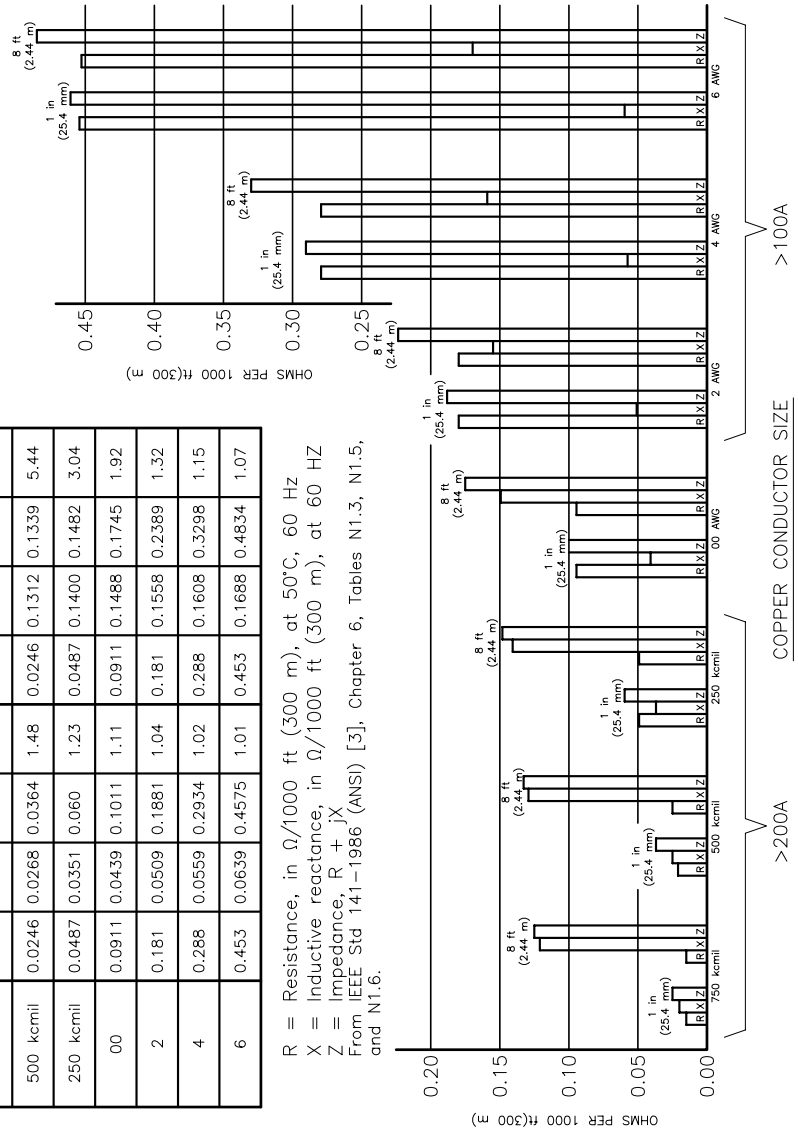

CONDUCTOR SIZE	1 in (25.4 mm) CONDUCTOR SPACING				8 ft (2.44 m) CONDUCTOR SPACING			
	R	X	Z	Z/R	R	X	Z	Z/R
750 kcmil	0.0168	0.0219	0.0276	1.64	0.0168	0.1268	0.1279	7.61
500 kcmil	0.0246	0.0268	0.0364	1.48	0.0246	0.1312	0.1339	5.44
250 kcmil	0.0487	0.0351	0.060	1.23	0.0487	0.1400	0.1482	3.04
00	0.0911	0.0439	0.1011	1.11	0.0911	0.1488	0.1745	1.92
2	0.181	0.0509	0.1881	1.04	0.181	0.1558	0.2389	1.32
4	0.288	0.0559	0.2934	1.02	0.288	0.1608	0.3298	1.15
6	0.453	0.0639	0.4575	1.01	0.453	0.1688	0.4834	1.07

R = Resistance, in Ω/1000 ft (300 m), at 50°C, 60 Hz
X = Inductive reactance, in Ω/1000 ft (300 m), at 60 HZ
Z = Impedance, R + jX
From IEEE Std 141–1986 (ANSI) [3], Chapter 6, Tables N1.3, N1.5, and N1.6.

Figure 2-1—Variation of *R* and *X* with conductor size and spacings

 Copyright © 2007 IEEE. All rights reserved.

Authorized licensed use limited to: COLORADO SCHOOL OF MINES. Downloaded on October 04,2023 at 04:18:37 UTC from IEEE Xplore. Restrictions apply.

The grounding conductor is considered to be bonded to the supply system grounded conductor, to the building frame, and to the grounding electrode at the source end of the circuit. For the purpose of examining the properties of the grounding conductor alone, it will be considered to be installed in metallic conduit and to remain free of any other contact with the building frame throughout its length of 61 m (200 ft). Consider a circuit of 350 A capacity, consisting of 250 mm^2 (500 kcmil) phase conductors and a 100 mm^2 (4/0 AWG) copper grounding conductor at 25 °C. It is assumed that the line-to-ground fault current at the outer terminal is 5500 A.

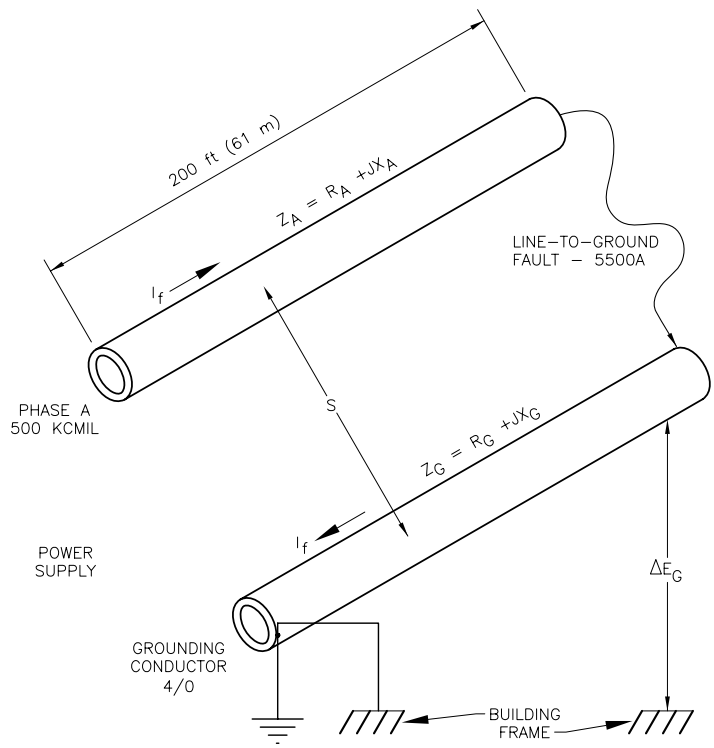

Figure 2-2—Single wire as grounding conductor

Consideration will be given to three values of center-to-center spacing between phase and grounding conductors: 51 mm, 203 mm, and 762 mm (2 in, 8 in, and 30 in). The 60 Hz impedance values for phase and grounding conductors at 50 °C in ohms for the 61 m (200 ft) run are as shown in Table 2-1 [see IEEE Std 141™-1986 *(IEEE Red Book™),* Tables N1.3 and N1.5, Chapter 6].

Copyright © 2007 IEEE. All rights reserved.

Authorized licensed use limited to: COLORADO SCHOOL OF MINES. Downloaded on October 04,2023 at 04:18:37 UTC from IEEE Xplore. Restrictions apply.

Affordable Wire Management, Exhibit No. EX1019
Case No. IPR2024-00182
Page 89 of 225

Table 2-1—Impedance as a function of conductor spacing

	Spacing		*R*	*X*	*Z*
	(mm)	(in)	(ohm)	(ohm)	(ohm)
Phase conductor A	51	2	0.0049	0.0085	0.0098
	203	8	0.0049	0.0149	0.0157
	762	30	0.0049	0.0210	0.0216
Grounding conductor G	51	2	0.0115	0.0108	0.0158
	203	8	0.0115	0.0172	0.0207
	762	30	0.0115	0.0233	0.0260

In Figure 2-2, the $I_F Z_G$ voltage drop along the grounding conductor appears as a touch electric shock at the far end of the grounding conductor. At the presumed ground-fault current I_F of 5500 A, the magnitude of shock-voltage exposure for each of the three spacings is shown in Table 2-2.

The change in spacing also changes the reactance of the phase conductor (relative to the grounding conductor). The corresponding values of the phase-conductor voltage drop (I_F held constant at 5500 A) are shown in Table 2-3.

A change in the location of the grounding conductor changes the value of the reactance in the phase conductor. This fact leads directly to the next important concept. While our impedance diagrams display both resistance and reactance as properties of the conductor, the reactance is, in fact, a property of the space electromagnetic field, which encircles the conductor.

Table 2-2—Shock voltage as a function of conductor spacing

Spacing		EG
(in)	(mm)	(V)
2	51	86.9
8	203	113.9
30	762	143.0

 Copyright © 2007 IEEE. All rights reserved.

Authorized licensed use limited to: COLORADO SCHOOL OF MINES. Downloaded on October 04,2023 at 04:18:37 UTC from IEEE Xplore. Restrictions apply.

Affordable Wire Management, Exhibit No. EX1019
Case No. IPR2024-00182
Page 90 of 225

Table 2-3—Phase conductor voltage drop

Spacing		*IZ* drop, phase A
(mm)	(in)	(V)
51	2	53.9
203	8	86.4
762	30	118.8

For the conductor geometry shown in Figure 2-2, the magnetic field, which is responsible for the reactive voltage drop, assumes the character shown in Figure 2-3. Throughout the space between the two conductors [203 mm (8 in) wide and 60 m (200 ft) long] exists a powerful 60 Hz magnetic field with a driving magnetomotive force of 5500 A turns. It constitutes a huge electromagnet. That portion of the total magnetic field that encircles the grounding conductor is considered to be associated with the reactance of the grounding conductor, while that which encircles the phase conductor is considered to be associated with the reactance of the phase conductor.

Any loop of conducting material (wire, pipe, messenger cable, steel structure, etc.) through which some fractional portion of this magnetic field passes will have induced in it a corresponding fractional part of the 60 Hz reactive voltage drop of the main power circuit loop. There need be no physical contact between the two loops. The mutual coupling is entirely magnetic. If the loop in which the voltage is mutually coupled is closed, then instead of a voltage, a circulating current will exist.

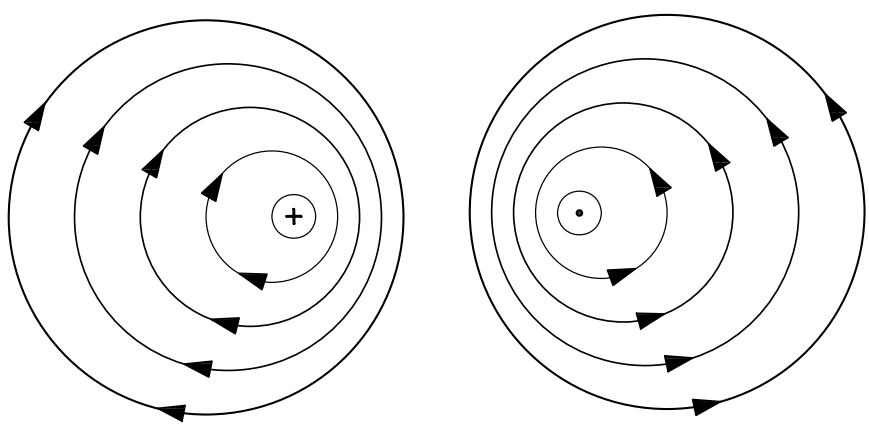

Figure 2-3—Magnetic field of wire as grounding conductor

Copyright © 2007 IEEE. All rights reserved.

Authorized licensed use limited to: COLORADO SCHOOL OF MINES. Downloaded on October 04,2023 at 04:18:37 UTC from IEEE Xplore. Restrictions apply.

Figure 2-4 shows a possible loop alongside the grounding conductor (not the most intensive field strength location). With this loop considered to be open at one corner, the generated voltage therein would be 1.65 V for a 51 mm (2 in) grounding conductor spacing, or 5.6 V for a 762 mm (30 in) spacing. If the loop circuit is closed, the flux linkages through this loop will be reduced to near zero, and the induced current will assume the value that becomes necessary to oppose the entrance of flux linkages. In the case illustrated, the induced current might very well be of the order of 500 A.

The situation presented by Figure 2-4 would not be judged to be a dangerous shock voltage exposure, but the possible arcing and flashing that could occur at a light pressure contact point closing the loop (open-circuit voltage of 2 V to 5 V with a closed-circuit current of 500 A) could be a very real source of ignition of combustible material (fire) or of flammable gas (explosion). The same size induction loop around a high capacity outdoor station, where the ground-fault current might be 50 000 A and the spacing between phase and grounding conductors 1.8 m (6 ft), might well display an open-circuit 60 Hz induced voltage of dangerous shock-hazard magnitude. By constructing a closed loop with no loose connections, so positioned as to block the passage of flux linkages responsible for an objectionable reactance, that reactance can be eliminated.

As far as the shock-exposure voltage drop along the grounding conductor is concerned, the key factors are grounding conductor cross-section area, spacing relative to phase conductors, magnitude of ground-fault current, and circuit length.

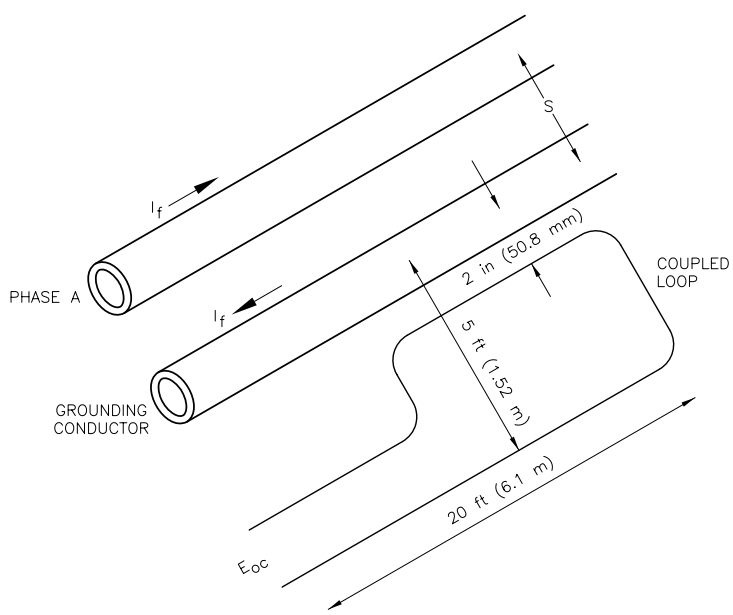

Figure 2-4—Electromagnetic induction of wire as grounding conductor

 Copyright © 2007 IEEE. All rights reserved.

Authorized licensed use limited to: COLORADO SCHOOL OF MINES. Downloaded on October 04,2023 at 04:18:37 UTC from IEEE Xplore. Restrictions apply.

In the usual installation, the grounding conductor is bonded to the building structure at regular intervals. The first impression is that such bonding causes the shock-exposure voltage to disappear. The correct explanation is that the voltage, which was observed to exist on the grounding conductor, has been impressed on the building structure. At the point of bonding, the potential difference has been reduced to zero. At the service equipment, a bonding jumper establishes zero potential difference. Therefore, the voltage drop along the building structure now equals the voltage drop along the grounding conductor because the two paths are in parallel. Perhaps voltage differences have been forced to appear between certain building structural members that are more serious than the original one. The problems of determining what voltage differences will appear between designated points of the building have become considerably more complex. A rational approach to the problem begins with an evaluation of the voltage exposure that would exist with the grounding conductor acting alone. This serves to establish the relative performance quality of the design being studied. It also identifies the maximum voltage difference that could possibly be imparted to the building structure by cross bonding.

A bonding connection from a grounding conductor to the building frame will result in a reduction of the voltage magnitude along the grounding conductor due to the reduction in impedance from the fault point to the source. This reduced impedance will tend to increase the amount of fault current flowing but not in the same proportion as the impedance reduction due to the phase conductor impedance being unaffected. An analytical approach to a solution of this problem is contained in Kaufmann, “Let’s Be More Specific.”

2.2.2 Cabling of conductors

Cabling or lacing together all the conductors of one circuit can reduce the spacing between grounding and phase conductors to the point of direct contact of the insulation. With other conditions remaining as indicated in Figure 2-2, the 60 Hz reactances could be reduced to 0.0061 ohm for the grounding conductor and to 0.0038 ohm for the phase conductor. While the grounding conductor impedance shows little improvement because it is largely resistance limited, the space magnetic field has been substantially reduced, with a corresponding reduction in magnetic coupling to secondary loop circuits.

By distributing the total grounding conductor cross section among the interstices of a three-conductor cable (one-third size conductor in each pocket), the effective reactance of the grounding conductor can be further reduced, resulting in a corresponding reduction in the space magnetic field strength.

2.2.3 Enclosing metal shell

By forming the metal of the grounding conductor into a tubular shape, within which are run the circuit phase and neutral conductors, a marked improvement in effectiveness is accomplished. The returning ground-fault current distributes itself about the entire enclosing shell in such fashion as to result in a lower round-trip impedance (see Figure 2-5). The electrical behavior during a line-to-ground fault is that of a coaxial line. Except for the effects of resistivity in the shell, all electric and magnetic fields are

Copyright © 2007 IEEE. All rights reserved.

Authorized licensed use limited to: COLORADO SCHOOL OF MINES. Downloaded on October 04,2023 at 04:18:37 UTC from IEEE Xplore. Restrictions apply.

contained inside the shell. The external space magnetic field becomes zero (see Kaufmann, "Some Fundamentals").

The customary metal conductor raceway fits this preferred conductor geometry perfectly. It is important that these tubular shaped sections be adequately joined and terminated so that significant additional impedance is not introduced. The normal tubular metal raceway is permitted to serve as the grounding conductor. See the NEC, Article 250.

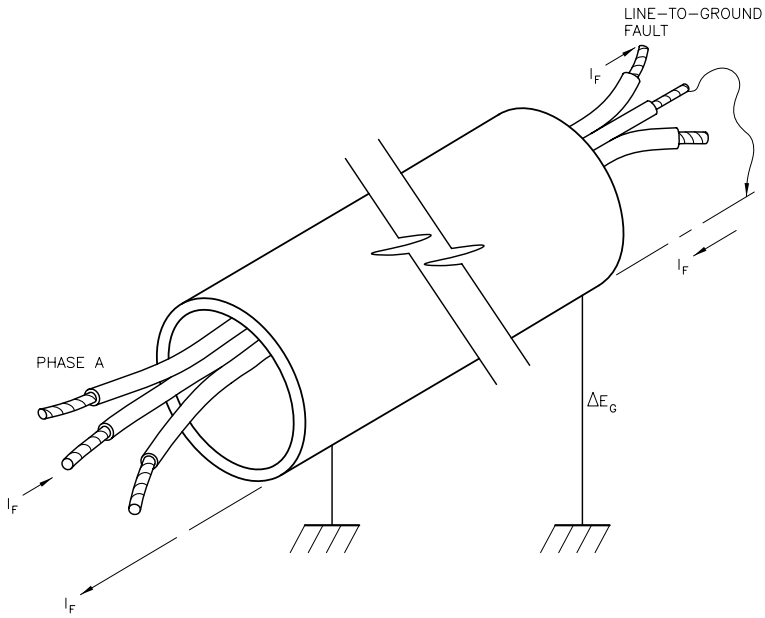

Figure 2-5—Tubular metal raceway as grounding conductor

Practical varieties of metal conductor raceways and metal sheathing possess substantial sheath resistance. The flow of ground-fault current will thus produce a voltage gradient along the grounding conductor due to impedance voltage drop. The magnitude of this voltage drop varies widely from one type of grounding method to another. Because of its importance in fixing the magnitude of electric shock voltage exposure, a rather extensive array of tests was conducted to provide specific data, and the results are reported in consolidated form in Kaufmann, "Let's Be More Specific." A variety of grounding conductor types were examined, covering a range of phase-conductor sizes from 3.3 mm^2 (12 AWG) to 250 mm^2 (500 kcmil). The results are presented in terms of voltage drop along the exterior surface per 1000 A of ground-fault current per 30.5 m (100 ft) of circuit length. The published data (see Kaufmann, "Let's Be More Specific," Figure 6, and Table III) is consolidated in Table 2-4.

 Copyright © 2007 IEEE. All rights reserved.

Authorized licensed use limited to: COLORADO SCHOOL OF MINES. Downloaded on October 04,2023 at 04:18:37 UTC from IEEE Xplore. Restrictions apply.

Table 2-4—Voltage drop of conductors in cable or conduit

Copper conductor size	Cable or conduit	DC resistance Ω/100 ft	Computed IR drop V/1000 A/ 100 ft	Measured drop[a] V/1000A/ 100 ft
500 kcmil	3/C VCI (steel armor)	0.0383	38.3	35
500 kcmil	3/C VCI (steel armor with internal grounding conductor)	—	—	5
4/0 AWG	3/C VCI (aluminum armor)[b]	0.286	286.0	151
4/0 AWG	3/C VCI (aluminum armor with internal grounding conductor)[b]	—	—	12
4/0 AWG	3/C VCI (steel armor)[b]	—	—	55
4/0 AWG	3/C VCI (steel armor with internal grounding conductor)[b]	—	—	11
4/0 AWG	3/C lead sheath (15 kV)	0.00283	2.83	11
4/0 AWG	4 in rigid steel conduit	0.0025	2.5	1
2/0 AWG	2 in rigid steel conduit	0.0095	9.5	6
1/0 AWG	3/C VCI (steel armor)	0.0458	45.8	51
1/0 AWG	3/C VCI (steel armor with internal grounding conductor)	—	—	19
2 AWG	Aluminum sheath (solid sheath M/C cable)	0.01	10.0	9
2 AWG	1 1/4 in rigid steel	0.0108	10.8	11
2 AWG	1 1/4 in EMT	0.0205	20.5	22
2 AWG	1 1/4 in flexible metal conduit (Greenfield)	0.435	435.0	436
8 AWG	3/4 in rigid steel	0.02	20.0	21
8 AWG	3/4 in EMT	0.0517	51.7	48
8 AWG	3/4 in flexible metal conduit (Greenfield)	1.28	1280.0	1000
10 AWG	Aluminum sheath (solid sheath MC cable)	0.015	15.0	16
12 AWG	1/2 in rigid steel	0.0223	22.3	25

Copyright © 2007 IEEE. All rights reserved.

Authorized licensed use limited to: COLORADO SCHOOL OF MINES. Downloaded on October 04,2023 at 04:18:37 UTC from IEEE Xplore. Restrictions apply.

Table 2-4—Voltage drop of conductors in cable or conduit *(continued)*

Copper conductor size	Cable or conduit	DC resistance Ω/100 ft	Computed IR drop V/1000 A/ 100 ft	Measured drop[a] V/1000A/ 100 ft
12 AWG	1/2 in EMT	0.0706	70.6	70
12 AWG	BX without ground (AC cable)	1.79[c]	1790.0	1543

[a]Value read from bar chart (numeric values not published).
[b]The listing of varnished cambric insulated (VCI) cable is included because it is the only known documented test of aluminum with and without an internal grounding conductor and of the same conductor size comparison of steel vs. aluminum encirclement of conductors.
[c]Does not meet current Underwriters Laboratories' listing requirements.

Rigid steel conduit is observed to offer superior performance, principally because of the heavy wall thickness. The striking contrast between steel and aluminum conduit is interesting and offers specific application advantages. The high magnetic permeability of steel should and does account for a higher line-to-ground fault impedance (see Bisson and Rochau; Kaufmann, "Let's Be More Specific" and "Some Fundamentals"). It would at first seem that the voltage drop along the raceway exterior would also be increased; yet the exact opposite is observed. The effect of the magnetic material in the conduit wall is to confine the return current largely to the internal shell of the conduit, penetrating to the exterior surface only as magnetic saturation in the iron occurs for large fault currents.

It should be noted that the values listed in Table 2-4 for flexible metal conduit and old-type BX armored cable are excessive. Old-type BX did not incorporate an internal bonding strip in direct contact with the armor. Modern armored cable (Type AC) has such a bonding strip (see NEC).

It should also be noted that flexible metal conduit (as well as liquid tight flexible metal conduit) does not have an internal bonding strip and is not suitable for equipment grounding without a separate EGC. Short sections of flexible metal conduit, in certain applications, may not be required (see NEC) to have a separate EGC, but a separate EGC is recommended due to vibration and equipment movement that may loosen the grounding connector connection to the flexible conduit.

It is significant to note the sharp decrease in voltage drop when an internal grounding conductor is added in parallel with the conduit. In addition, the line-to-ground fault impedance will be reduced. Thus, the use of a metallic conduit raceway as a grounding conductor, supplemented by an EGC within the conduit, achieves both minimum ground-fault impedance (see Gienger, Davidson, and Brendell) and minimum shock-hazard voltage.

The NEC provides no specific limitations on the length of tubular metal raceway or cable armor that may be used as an EGC. It is apparent, though, that excessive length can result

 Copyright © 2007 IEEE. All rights reserved.

Authorized licensed use limited to: COLORADO SCHOOL OF MINES. Downloaded on October 04,2023 at 04:18:37 UTC from IEEE Xplore. Restrictions apply.

in an impedance that will limit the ability of the circuit overcurrent device to clear a ground fault as well as cause a hazardous voltage on the raceway or cable armor surface. Soares contains some examples of maximum lengths as a function of overcurrent device rating. The resulting reduction of impedance when an internal grounding conductor is added in parallel with a metal raceway will permit feeder distance to be increased by up to 1.7 times the maximum feeder length without the internal conductor.

For the circuit arrangement indicated in Figure 2-2, the progressive improvement in shock-voltage exposure with different forms of grounding conductors is displayed in Table 2-5. [The conditions of Figure 2-2 are maintained, except for grounding conductor size and shape. I_F is held constant at 5500 A. The 762 mm (30 in) spacing is included only for reference. This spacing is unlikely in most industrial applications.]

Table 2-5—Shock voltage as a function of conductor spacings

Grounding conductor	Shock-voltage exposure Eg (V)
107 mm^2 (#4/0) copper with 762 mm (30 in) spacing	151.3
107 mm^2 (#4/0) copper with 203 mm (8 in) spacing	124.3
107 mm^2 (#4/0) copper with 51 mm (2 in) spacing	100.1
Triple ground wires, 107 mm^2 (#4/0) total in three-conductor cable	70.4

Making the grounding conductor a conduit enclosing the phase conductor, the shock-voltage exposure Eg drops to 6.7 V for rigid aluminum conduit and to 11 V for rigid steel conduit with the same 5500 A.

The effective performance of an enclosing raceway as a grounding conductor should be used to full advantage in electrical system designs. It is important to avoid the use of raceways having inadequate short-time current-carrying capacity unless supplemented with an adequate additional EGC run within the raceway. Joints between raceway sections and other grounding connections must provide good electrical conduction at high fault current levels or the effectiveness of the raceway, as a grounding path, will be lost. The value of good workmanship cannot be overestimated.

Reported in the literature (see Gienger, Davidson, and Brendell; Kaufmann, “Some Fundamentals”), but not documented in detail, is the fact that, where more than a single length of conduit was used for a ground-return path, sparks were observed at conduit junctions and connections to boxes at the beginning of the experimental measurements. The sparking did not occur during subsequent tests because either the conduit connections were made more secure or the conduit sections welded to each other by the resultant electrical arcs. This agrees substantially with observations made by many field engineers but not substantiated in current technical literature. The use of a separate EGC, as

Copyright © 2007 IEEE. All rights reserved.

Authorized licensed use limited to: COLORADO SCHOOL OF MINES. Downloaded on October 04,2023 at 04:18:37 UTC from IEEE Xplore. Restrictions apply.

recommended, installed inside of the metallic conduit, can minimize the probability of arcing at joints and provide maximum fault current for an overcurrent device to clear the fault rapidly.

2.2.4 Circuit impedance components

The general expression for the three-phase line-to-ground-fault current in a three-phase system is shown in Equation (2.1):

$$I_F = \frac{3E_A}{Z_1 + Z_2 + Z_0 + 3Z_G} \tag{2.1}$$

Both positive-sequence (Z_1) and negative-sequence (Z_2) impedance are active only in the outgoing phase conductors since the currents of these two sequences combine to zero at the fault location. The zero-sequence currents I_0, however, are in phase on all phase conductors. Three of the phase conductor currents I_0 must be returned collectively ($3I_0$) over the grounding conductor. Thus, the transit of the zero-sequence current involves a voltage drop of I_0Z_0 in transmitting the current out over the phase conductors and a voltage drop of $3I_0Z_G$ in transmitting the current back over the grounding conductor. A correct accounting of impedance for these two terms in the zero-sequence network develops when I_0 is taken out as one factor [I_0 ($Z_0 + 3Z_G$)].

Test results (see Bisson and Rochau; Geiger, Davidson, and Brendell; Kaufmann, "Let's Be More Specific" and "Some Fundamentals") clearly display the fact that the round-trip impedance ($Z_0 + 3Z_G$) is much greater than Z_0, yet the fractional part of the round-trip zero-sequence voltage drop, which appears along the raceway exterior, is but a very small part of $I_0(Z_0 + 3Z_G)$. No easy way to separate Z_0 from $3Z_G$ is available, and in fact, no purpose is served in separating them. It is very important to recognize that both items are present and that the use of the circuit Z_0 alone would represent a gross error.

As can be seen from Kaufmann, "Let's Be More Specific," the $(Z_0 + 3Z_G)/Z_1$ ratio can be kept low, leading to a low-impedance (Z_G) ground-return path. This is obtained by using ground conductors or buses, or both, in conduit runs, cables, busway, and equipment.

It is often erroneously concluded that multiple connection of the ground-return path to building steel has only positive results. The benefits are as follows:

a) No voltage hazard is present at the location where the building steel is connected, and

b) An alternate return path exists in the event that there is a break in the intended return path.

However, the following potential disadvantages may exist:

1 Diversion of ground-return current through building steel may cause sparking at structural steel joints not intended to be electrically conductive.

2) Return current that is not near to the faulted phase conductor will increase the reactance of the phase conductor and the return path.

 Copyright © 2007 IEEE. All rights reserved.

Authorized licensed use limited to: COLORADO SCHOOL OF MINES. Downloaded on October 04,2023 at 04:18:37 UTC from IEEE Xplore. Restrictions apply.

3) Fault voltage will be applied to the building structure and, if not uniformly distributed due to high-impedance joints, may result in hazardous touch potentials.

While these conditions should not be ignored, electrical enclosures, including metallic conduit, are routinely subject to supplementary grounding throughout the premises due to contact with building steel or other piping systems. There is little history of these considerations manifesting themselves. Tests have shown that the majority of fault current still flows through the EGCs. This is primarily due to the higher impedances of the alternate fault current paths.

2.2.5 Electromagnetic interference suppression

In developing the fundamental behavior patterns of the various forms of grounding conductors, the ability to suppress the magnitude of the electric and magnetic fields in the space external to the electric power channel by proper design methods was noted. This knowledge can be employed to make the grounding conductor serve to significantly reduce the electrical noise contributed to the space surrounding the electrical run. As might be expected from results so far defined, the enclosing metal raceway is superior to discrete conductors. Tubular steel raceways are very effective in suppressing strong electric fields. High conductance may be needed to achieve very low noise levels.

The rapidly increasing use of low energy level digital data transmission circuits in combination with a fast growing noise level on power circuit conductors due to time modulation current choppers, usually silicon controlled rectifiers (SCRs), for accomplishing heating appliance control, light-circuit dimming, motor-speed control, etc., emphasizes the importance of this electromagnetic interference suppression function (see Goers; “Grounding”; Schmidt; Willard).

2.2.6 Bonding of metal sleeves enclosing a grounding conductor

The behavior pattern of an independent grounding conductor (such as the run to the grounding electrode at the service or the grounding conductor connecting a surge arrestor to an earthing terminal) is very different from that of a power circuit grounding conductor (see Figure 2-6).

The function in this case is to conduct the one-way current to a grounding (earthing) electrode. The return path of this current is remote from the grounding conductor. In the case of lightning current, the return path may be so remote as to be obscure. There will be an inductive voltage drop along the conductor length due to a changing current ($L \times \mathrm{d}i/\mathrm{d}t$ or $X_L \times I_{ac}$). The larger the conductor diameter, the lower will be the conductor inductance (or reactance). If the member enclosing the conductor is magnetic, the magnetic field encircling the conductor is increased, which correspondingly increases the inductive voltage drop. If the enclosure is nonmetallic conduit or tubing, there will not be a magnetic effect.

Copyright © 2007 IEEE. All rights reserved.

Authorized licensed use limited to: COLORADO SCHOOL OF MINES. Downloaded on October 04,2023 at 04:18:37 UTC from IEEE Xplore. Restrictions apply.
Affordable Wire Management, Exhibit No. EX1019
Case No. IPR2024-00182
Page 99 of 225

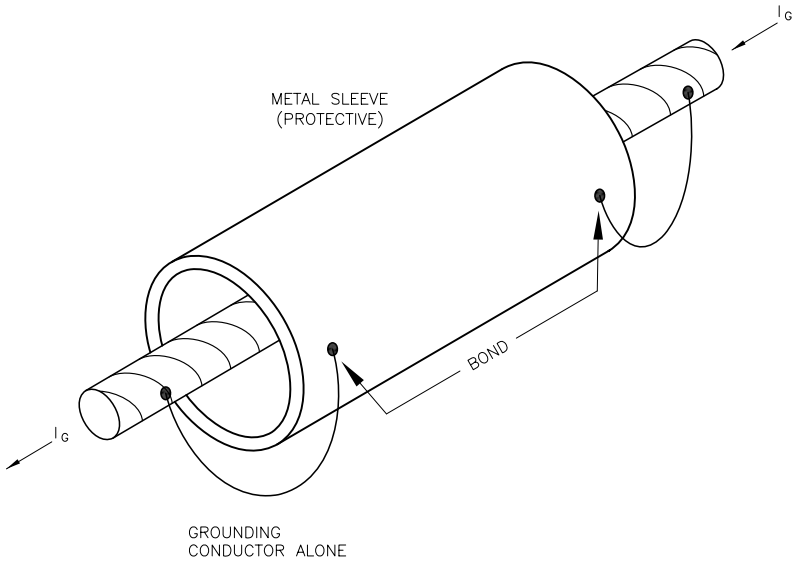

Figure 2-6—Bonding of metal enclosure

An inductance is commonly made by wrapping a number of turns of conductor wire around a magnetic (iron) core. An equally effective method is to "wrap" a magnetic (iron) cylinder around a conductor. Such a cylinder is a steel conduit, although even aluminum has an effect from eddy current generated in the conduit. It has been found that enclosing a single grounding conductor in steel conduit increases its impedance by a factor of up to 40.

In some cases, installation conditions are such as to warrant the application of a metal enclosure over a section of this type of grounding conductor. In all cases where this is done, the conductor and the enclosing protective metal shell should be bonded together at both ends of every integral section of enclosure for the following reasons:

a) To avoid increased voltage drop if the enclosure is made of magnetic material.
b) To take advantage of the lower voltage drop associated with larger conductor diameter (see Bisson and Rochau for complete details).
c) To permit the steel conduit to carry the major portion of the ground seeking current.

2.2.7 Grounding connections associated with steep wave front voltage protection equipment

The application of surge arresters to transformers (see Figure 2-7) and surge protective capacitors and arrestors to rotating machines (see Figure 2-8) illustrates this application of a grounding conductor. The function of the grounding conductor is to provide a

 Copyright © 2007 IEEE. All rights reserved.

Authorized licensed use limited to: COLORADO SCHOOL OF MINES. Downloaded on October 04,2023 at 04:18:37 UTC from IEEE Xplore. Restrictions apply.

conducting path over which the surge current can be diverted around the apparatus being protected, without developing a dangerous voltage magnitude.

In the presence of a changing current (di/dt) there will be an inductive voltage drop developed along the grounding conductor itself, which is additive to the protective device voltage. The amount of this added voltage will be proportional to the conductor length and the spacing from the protected apparatus and of course to the magnitude of di/dt.

Actual values of di/dt range over wide limits, but a value of 10 kA/μs is representative. With such a rate of rise of current, even 1 μH of inductance can be significant [see Equation (2.2)].

$$E = L \times di/dt \tag{2.2}$$

$$= 10^{-6} \times 10\,000 \times 10^{6}$$

$$= 10\,000 \text{ V}$$

NOTE—1 μH is the equivalent of 0.000377 Ω reactance at 60 Hz.

It would take only a 0.88 m (3 ft) length of 95 mm^2 (4/0 AWG) conductor spaced 1.52 m (5 ft) away from the transformer in Figure 2-7 to add 10 000 V to the arrester voltage. Thus, grounding conductor length and spacing become of paramount importance. One can readily visualize that the additive inductive voltage is generated by the total flux linkages that can be developed through the window between the grounding conductor and the protected apparatus.

To take full advantage of the protective properties of the surge arrester in Figure 2-7, the arrester should be mounted so as to be in direct shunt relationship to the terminal bushings. At lower voltages, an arrester supporting bracket can usually be extended from the base of the bushing. At higher voltages, a shelf extending from the tank body at the proper place to minimize the inductive voltage is often used to support the arresters.

Locating the arrestor at any substantial distance, such as at the pole-top crossarm, with an independent grounding conductor can seriously increase the surge voltage stress on a transformer or switchgear by the voltage drop in the arrestor down lead to ground. Arresters should be as close as possible to the equipment to be protected and to ground.

The same fundamental reasoning applies to the installation geometry of rotating machine surge-protective equipment (see Figure 2-8). A box, shelf, or bracket directly adjacent to the emerging leads from the machine can accomplish the desired objective.

Copyright © 2007 IEEE. All rights reserved.

Authorized licensed use limited to: COLORADO SCHOOL OF MINES. Downloaded on October 04,2023 at 04:18:37 UTC from IEEE Xplore. Restrictions apply.

Affordable Wire Management, Exhibit No. EX1019
Case No. IPR2024-00182
Page 101 of 225

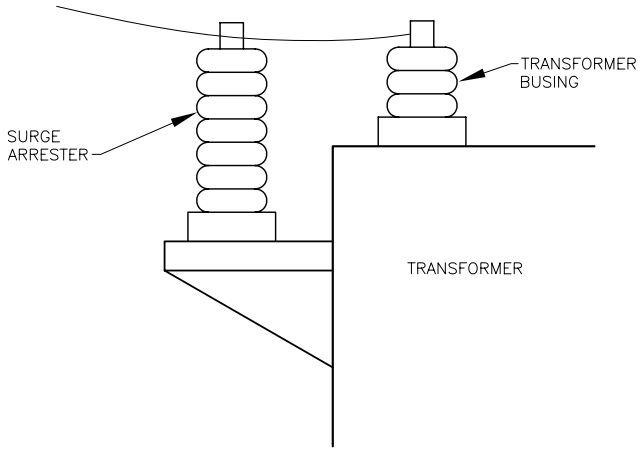

Figure 2-7—Surge arrestor location on transformer

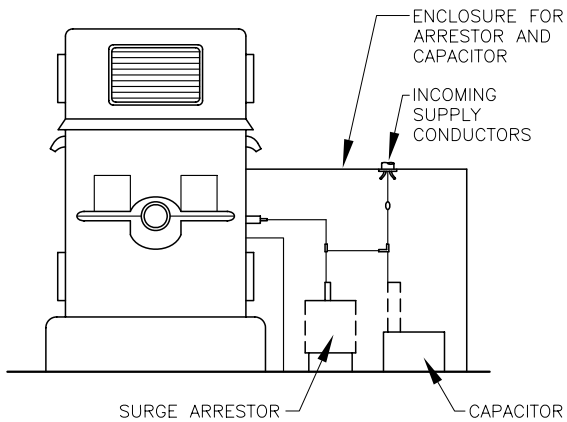

Figure 2-8—Surge protection equipment on motor (only one phase shown for clarity)

The mounting frame should connect directly with the machine frame to minimize the circuit inductance. It is the capacitor element of the protection system that deserves prime attention. If this item is properly connected with short, direct connecting leads, the rate of rise of voltage at the motor terminal will be quite gentle, requiring perhaps 10 μs to build up to arrester sparkover value. Thus, the leads to the arrester can be longer because of the modest rate of rise of voltage. In fact, there can be a benefit from inductance in the arrester circuit, which cushions the abrupt drop in machine terminal voltage when the arrester sparks over.

 Copyright © 2007 IEEE. All rights reserved.

Authorized licensed use limited to: COLORADO SCHOOL OF MINES. Downloaded on October 04,2023 at 04:18:37 UTC from IEEE Xplore. Restrictions apply.

Affordable Wire Management, Exhibit No. EX1019
Case No. IPR2024-00182
Page 102 of 225

2.2.8 Connection to earth[3]

The well-established usage of the terms *ground* and *earth* in our technical literature leads to many misconceptions, since they seemingly are almost alike, yet in fact are not. The electrical system of an aircraft in flight will have a ground bus, grounding conductors, etc. To suggest that ground and earth can be used interchangeably is obviously in error here. To an electrician working on the tenth floor of a modern steel-structured building, the referenced ground is the building frame, attached metal equipment, and the family of electrical system grounding conductors present at the working area. What might be the potential of earth is of negligible importance to this worker on the tenth floor.

If the worker is transported to the building basement in which the concrete floor slab rests on soil, or to the yard area of an outdoor open-frame substation, earth does become the proper reference ground to which electric shock voltage exposure should be referenced.

Thus, the proper reference ground to be used in expressing voltage exposure magnitudes may sometimes be earth, but (outside of the outdoor substation area) most likely will be the electric circuit metallic grounding conductor. The following paragraphs will show that the potential of earth may be greatly different from that of the grounding conductor. It therefore becomes very important that shock-exposure voltages be expressed relative to the proper reference ground.

All electrical systems, even those installed in airborne vehicles (as at least one Apollo crew can testify), may be faced with circumstances in which sources of electric current are seeking a path to ground. These conditions can do serious damage to electrical equipment or develop dangerous electric-shock-hazard exposure to persons in the area, unless this stray current is diverted to a preplanned path to a ground of adequate capability.

A comprehensive treatment of the behavior of earthing terminals appears in Chapter 4 and in IEEE Std 80™, Armstrong and Simpkin, Boodle, and Thapar and Puri. The prime purpose of this discussion is to develop a concept of the potential gradients created in discharging current into earth and the manner in which the equipment grounding problem is influenced thereby.

Earth is inherently a rather poor conductor whose resistivity is around one billion times that of copper. A 3 m (10 ft) long by 16 mm (5/8 in) diameter ground rod driven into earth might very likely represent a 25 ohm connection to earth. This resistance may be imagined to be made up of the collective resistance of a series of equal thickness concentric cylindrical shells of earth. The inner shell will of course represent the largest incremental value of resistance, since the resistance is inversely proportional to the shell diameter. Thus, the central small diameter shells of earth constitute the bulk of the earthing terminal resistance. Half of the 25 ohm resistance value would likely be contained within a 0.3 m (1 ft) diameter cylinder (see Table 4-1).

For the same reason, half of the voltage drop resulting from current injection into this grounding electrode would appear across the first 0.15 m (0.5 ft) of earth surface radially

[3]See Chapter 4 for more details.

Copyright © 2007 IEEE. All rights reserved.

Authorized licensed use limited to: COLORADO SCHOOL OF MINES. Downloaded on October 04,2023 at 04:18:37 UTC from IEEE Xplore. Restrictions apply.
Affordable Wire Management, Exhibit No. EX1019
Case No. IPR2024-00182
Page 103 of 225

away from the ground rod. If a current of 1000 A were forced into this grounding electrode, the rod would be forced to rise above mean earth potential by 25 000 V (1000 A × 25 ohm). Half of this voltage (12 500 V) would appear as a voltage drop between the rod and the earth spaced only 0.15 m (0.5 ft) away from the rod. While this current is flowing, a person standing on earth 0.15 m (0.5 ft) away from the ground rod and touching the connecting lead to the electrode would be spanning a potential difference of 12 500 V. A three-dimensional plot of earth surface potential vs. distance from the ground rod would create the anthill-shape displayed in Figure 2-9. The central peak value would be the rod potential (referred to remote earth potential), namely 25 000 V. Moving away from the rod in any horizontal direction would rapidly reduce the voltage value. The half-voltage contour would be a horizontal circle 0.3 m (1 ft) in diameter encircling the rod.

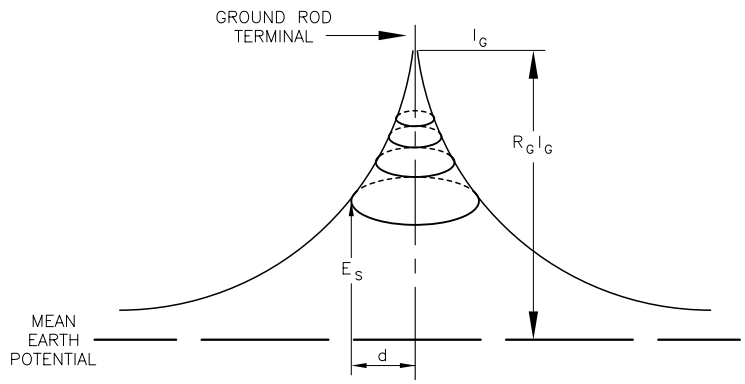

E_S = EARTH SURFACE POTENTIAL
d = RADIAL DISTANCE FROM ROD
R_G = RESISTANCE OF ROD TO EARTH
I_G = GROUND CURRENTS INTO ROD

Figure 2-9—Earth surface potential around ground rod during current flow

For example, consider a 15 m by 15 m (50 ft by 50 ft) substation area within which 25 driven rods, each of the type previously described, had been uniformly distributed. Because of the overlapping potential gradient patterns, the composite resistance will not be as low as 25/25 ohm. For the case at hand, a 2 ohm value would be typical (see Chapter 4). Should a line-to-ground fault at this station produce a 10 000 A discharge into the earthing terminal, the resulting voltage contour map would display 25 sharp-pointed potential mounds peaking at 20 000 V. In between would be dish-shaped voltage contours with minimum values ranging from perhaps 2000 V to 5000 V, depending on location.

Such a highly variable voltage contour pattern within the walking area of the substation would not be acceptable. Additional shallow buried grounding wires can be employed to elevate the earth surface potential between main electrodes (see IEEE Std 80). Note particularly the concepts of step, touch, and transferred potentials. Additional shallow buried grounding wires can be employed to tailor the voltage contour adjacent to but

 Copyright © 2007 IEEE. All rights reserved.

Authorized licensed use limited to: COLORADO SCHOOL OF MINES. Downloaded on October 04,2023 at 04:18:37 UTC from IEEE Xplore. Restrictions apply.

external to the enclosing fence. Beds of coarse cracked rock, well drained to prevent standing water, can contribute to improved electric shock security. Metal grill mats bonded to the steel-framework supporting switch operating handles and located at the "standing" location of switch operators can ensure that the operator's hands and feet are referenced to the same potential.

2.3 Equipment grounding as influenced by type of use

The principal classes of use may be categorized for our purposes as follows:

a) Outdoor open frame substations

b) Outdoor unit substations

c) Outdoor portable heavy-duty equipment, such as shovels, draglines, dredges

d) Interior wiring systems

e) Interior unit substations and switching centers

The problems presented to the equipment grounding system designer vary quite widely with the different classes of use. The basic objectives remain the same throughout. The equipment grounding system must cope with the current flow (magnitude and duration) that is imposed on it by extraordinary events that occur during the course of ordinary power system operation. This duty is most commonly the result of an insulation failure between an energized conductor and the conductive metallic structure that supports or encloses it. However, the duty may result from an outside injection of current, such as a lightning discharge or a falling overhead high-voltage conductor. The equipment grounding system is expected to carry this imposed current without thermal distress and without creating dangerous electric shock voltage exposure to persons in the area.

2.4 Outdoor open-frame substations

2.4.1 General

The distributed nature of the typical outdoor open-frame substation presents some of the most perplexing equipment grounding problems to be found anywhere. It is quite common that various pieces of major apparatus will appear as "island" installations within the substation area. For any single equipment item, the voltage stress imposed on its insulation system will be determined by the voltage difference between its electrical terminals and the frame or metal case that encloses its active parts. The magnitude of electric-shock exposure to an operating or maintenance person within the substation area proper will be a function of the voltage difference between the ground surface on which this person stands and the metal that the person normally touches, such as apparatus frames or substation structure (see IEEE Std 80).

The magnitude of electric shock voltage exposure to a person approaching the enclosing fence will depend on the character of the earth surface voltage gradient contours adjacent to the fence on the outside of the substation area.

Copyright © 2007 IEEE. All rights reserved.

Authorized licensed use limited to: COLORADO SCHOOL OF MINES. Downloaded on October 04,2023 at 04:18:37 UTC from IEEE Xplore. Restrictions apply.

Merely connecting an EGC to electrical equipment enclosures, or even fences, does not insure that hazardous shock voltages will not be present. Adjacent ground surfaces may have steep voltage gradients within reach of the equipment unless controlled or mitigated by insulating coverings of ground, such as crushed rock or asphalt, and proper design of a ground grid. The design of such grids is covered in Chapter 4, as it is a function of the connection to earth. However, the grid also functions to preserve an equipotential plane in the vicinity of grounded metal enclosures or structures and this function is a standard criterion of the grid design (see IEEE Std 80).

2.4.2 Design of paths for power frequency ground-fault current flow

This ability to carry the ground-fault current from the point where it enters the station to the point where it is to depart is accomplished by supplementing the inherent metallic substation structure with an array of grounding conductors that interconnect the bases of structural columns and are extended to the island installations of apparatus, routed over appropriate paths (see Bisson and Rochau; Kaufmann, "Some Fundamentals"). Copper cable is generally used for this purpose, with the conductor size ranging from 70 mm^2 (2/0 AWG) for small stations, for instance, to perhaps 240 mm^2 (500 kcmil) for large stations. It is appropriate to seek an effective short-time current capability in the grounding conductor path that is no less than 25% of that possessed by the phase conductor with which it is associated. In any case, it should be capable of accepting the line-to-ground short-circuit current (magnitude and duration) permitted to flow by the overcurrent protection system without thermal distress. (See IEEE Std 80 for design equations.)

The routing of a grounding conductor should seek to minimize the separation distance between it and the associated phase conductors. In multibay metal structure construction, the short-circuited loops created by the bonding of grounding conductors between column bases may effectively limit the ground-circuit reactance under seemingly wide spacing conditions.

Grounding conductors sized and routed according to the same rules should be run to those points required for system grounding connections, such as to the neutral terminal of a power transformer that is to be grounded or to the neutral of a grounding transformer. See 4.3 for connection methodologies.

Junctions between sections of wire grounding conductors should be made by exothermic welding. At the terminations, exothermic welding or fittings approved for the purpose should be used.

If overhead-line ground conductors are terminated at towers along the substation outer boundary and the phase conductors continue out across the station plot, perhaps to a point where they drop down to apparatus terminals, an adequately sized grounding conductor should be strung across the area with a vertical down member to the apparatus frame to establish a path for ground-current flow that remains reasonably close to the route of the phase conductors.

 Copyright © 2007 IEEE. All rights reserved.

Authorized licensed use limited to: COLORADO SCHOOL OF MINES. Downloaded on October 04,2023 at 04:18:37 UTC from IEEE Xplore. Restrictions apply.

It is important that the grounding conductor system extend to and connect with each of the island structures contained within the substation area.

2.4.3 Design of earthing connections

The achievement of a prescribed degree of connection to earth will constitute an important design objective. This usually will involve a multiplicity of earthing connections (grounding electrodes) distributed about the substation area. If individual grounding electrodes are not kept sufficiently separated physically, their effectiveness is severely impaired (see Chapter 4).

One specific design limit may be the maximum allowable voltage excursion on the substation structure (relative to mean earth potential) due to a line-to-ground power system fault or a lightning discharge. All signal and communication circuits that extend from this station to remote locations must be designed to accommodate this voltage excursion without damage. The allowable voltage excursion on the station structure may be limited by the voltage rating of a power circuit entering the station. Consider, for instance, a station whose main circuits operate at 230 kV, but which contains outgoing circuits operating at 4.16 kV. A voltage excursion on the station ground mat of 25 kV would not be troublesome to the 230 kV system, but would be disastrous to components of the 4.16 kV system. Even the best of available surge arresters on the 4.16 kV circuits would be to no avail. The excess seal-off voltage present would promptly result in their destruction. The allowable maximum voltage excursion on the station ground mat may be set by one of a variety of factors. Once this is set, the design of the station grounding connection systems can proceed.

The effectiveness of reinforcing steel located in below-grade foundation footing as functional grounding electrodes is discussed in Lee and Fagan. All future station design specifications should call for electrical bonding between the metal tower base plate and the reinforcing bars in buried concrete footings. This can be accomplished readily in most instances via the hold-down J bolts, provided that the bolts are bonded to the reinforcing bars.

If the soil at the substation site tends to be an active electrolyte like cinder fill, the use of dissimilar metals (for instance, copper and steel) as grounding electrodes bonded together in the station-grounding conductor network may lead to objectionable electrolytic deterioration of the buried steel members (see Coleman and Frostick). With today's knowledge, the avoidance of such trouble may be relatively easy. When the soil is active, with a resistivity less than 2000 ohm-cm, the required earthing connection may be obtained using only the buried steel members forming an inherent part of the station. If the soil is not active, the intermix of metals such as copper and steel is not troublesome.

Lightning masts extending upward from the top structural members of the station can be effective in intercepting lightning strokes and leading the discharged current to earth without insulation flashover at the station. The avoidance of insulation flashover is aided by higher insulation flashover levels at the station and opposed by more intense lightning strokes. However, an installation that reduces the number of flashover incidents by 60% (far short of perfection) can still be a sound economic investment (see Chapter 3).

Copyright © 2007 IEEE. All rights reserved.

Authorized licensed use limited to: COLORADO SCHOOL OF MINES. Downloaded on October 04,2023 at 04:18:37 UTC from IEEE Xplore. Restrictions apply.

2.4.4 Surge voltage protective equipment

Surge voltage protective devices intended to deal effectively with fast-front voltage transients must be connected in a close shunt relationship to the apparatus being protected (see 2.2.7).

The presence of an exposed overhead line running to the station, but terminating at an open switch or open circuit breaker, invites a flashover at the open terminal because of the tendency for a traveling voltage wave to double its voltage upon encountering an open terminal. The possibility of such an event and its consequences should receive deliberate consideration. If found to be likely, and objectionable, this type of flashover can be prevented by the installation of line-type surge arresters directly ahead of the open-circuit point on the circuit or by over-insulation (double normal value of the approaching line) of the terminal end of the line within the confines of the station, ahead of the point of open circuit. Both sides of an open switch may need surge arrester protection if there is lightning exposure on both sides.

NOTE—This increased withstand voltage also applies to the circuit-opening switching device.

2.4.5 Control of surface voltage gradient

The tendency for steeply rising voltage gradients to appear directly around discrete grounding electrodes results in a very nonuniform ground surface potential in the substation area during a ground-fault incident. This can appear as a dangerous electric shock voltage exposure to the persons working in the substation area (see IEEE Std 80; Armstrong and Simpkin; Bodle; Thapar and Puri). It is hardly reasonable to design for a maximum voltage excursion on the station structure low enough to avoid danger. The alternative approach is to employ a mesh grid of relatively small bare conductors located slightly below grade and connected to the station frame. Although this will not likely reduce the overall station earthing resistance by very much, it will function (like conducting tape on cable insulation) to bring all parts of the substation surface earth lying above the grid mesh to nearly the same potential as the metal grid (that of the substation metal structure). Only small scallops of lesser voltage magnitude will exist between the crisscross conductors of the grid mesh. The possible magnitude of electric shock voltage exposure to maintenance personnel due to earth surface gradients can be reduced to tolerable levels. A surface layer of coarse cracked rock is commonly employed to contribute to reduced contact conductance between the yard surface and the worker's feet.

2.4.6 Voltage gradients external to but adjacent to the boundary fence

The steepness of the surface voltage contour adjacent to but outside the enclosing fence determines whether a person approaching the fence and touching it to the limit of their reach could receive a dangerous electric shock. If the fence were allowed to float, the adjacent voltage gradient would be substantially reduced. Common practice is to bond the fence to the station ground mat, which will take it up to the full mat potential and create a high surface gradient adjacent to the fence. In defense of the practice of bonding the fence to the station ground mat is the added security afforded should a high-voltage line conductor break and fall on the fence. The bond to the station ground allows the entire

 Copyright © 2007 IEEE. All rights reserved.

Authorized licensed use limited to: COLORADO SCHOOL OF MINES. Downloaded on October 04,2023 at 04:18:37 UTC from IEEE Xplore. Restrictions apply.

station grounding connection to participate in holding down the voltage magnitude of the fence and avoiding ground-fault impedance that might otherwise impede the performance of ground overcurrent relaying. Operating the enclosing fence at station ground mat potential also improves the uniformity of surface gradient within the substation area.

An inviting alternative would locate the boundary fence along a specific voltage contour line (or design for a constant voltage contour along the desired route of the fence). This approach might easily result in a 50% reduction in earth surface potentials external to the fence. To minimize the danger of increased voltage exposure from a broken line conductor, suitable guards would be needed to prevent a falling energized line conductor from making physical contact with the fence. Although "inviting," this approach is not practical due to the unknowns of soil strata that make the contours impossible to predict.

The present trend seems to favor a solid bond between the boundary fence and the station ground mat. Appropriate potential grading shields are buried below grade adjacent to the fence on the outside of the substation area to control the step and touch potential exposure to acceptable values (see IEEE Std 80; Armstrong and Simpkin; Bodle; Thapar and Puri).

It is very important to avoid a metallic extension from the station structure to some point outside the fenced area, which is exposed to contact by persons or animals. Such an extension might take the form of a water pipe, an air pipe, a messenger cable, etc., seemingly having no electrical function. What it does do is convey the potential of the station ground mat to the far end of the metal extension. The earth surface potential drops off fairly rapidly as one moves away from the boundary fence. The 50% voltage contour will be reached in a short distance away from a small station and in a longer separation distance from a large station. Even a fairly large station will display a 50% drop-off in surface potential within 3 m (10 ft). Thus, it would be entirely possible for a person standing on earth and touching a pipe extension from the station structure only 3 m (10 ft) removed from the enclosing fence to be subject to an electric shock voltage of 50% of the ground mat voltage of the station. A station ground mat voltage of 5000 V is not at all unusual for stations operating in the 4.16 kV to 33 kV range.

2.5 Unit substations

While the functional objectives remain unchanged, the concentration of apparatus items into a single metal-enclosed package greatly simplifies the equipment grounding system plan. Even the presence of a single separate line terminating structure adds little complexity.

The grounding conductor associated with each electric circuit to and from the substation is continued to the substation proper and terminated on the grounding bus provided there. This conductor should be of the prescribed cross section for the capacity of circuit involved and should be run with as close physical spacing to the power conductors as is feasible.

The problem of avoiding dangerous electric shock voltage exposure to persons in proximity to the enclosing fence involves the same considerations as in the case of open

Copyright © 2007 IEEE. All rights reserved.

Authorized licensed use limited to: COLORADO SCHOOL OF MINES. Downloaded on October 04,2023 at 04:18:37 UTC from IEEE Xplore. Restrictions apply.

frame substations. Within the confines of many industrial plants, impedance grounding (either low or high) is used to limit the level of ground-fault current (400 A being a common value for low-impedance grounding). This reduces the voltage gradients around the substation so that no fenced enclosure is needed. Persons can be permitted to approach and touch the substation enclosure with minimal risk of dangerous electric-shock exposure. Of course, the grounding bus and enclosure frame of the substation must be connected to the building grounding system, whether or not a local grounding electrode system is installed.

If the substation structure is exposed to lightning or contains surge arresters, the installation should include an appropriate grounding electrode. The reinforcing bars contained on the below-grade foundation structure will usually provide this function adequately (see Lee and Fagan.)

2.6 Installations serving heavy portable electric machinery

Introduced in 1.11 in regard to system supply, this area usually involves such equipment as power shovels, draglines, and many mine installations, and it represents one of the more difficult problems in avoiding dangerous electric shock voltage exposure. The mobility of the utilization equipment, and frequently of portable power equipment, precludes installation of a localized ground mat, such as would be employed at a fixed location. A safety ground system is utilized to ensure adequate grounding and personnel safety, and both ac and dc equipment can be employed.

Part a) of Figure 2-10 shows only the utilization system portion involving equipment grounding. This portable switchgear application indicates the utilization equipment is operating at the distribution voltage, and examples of this arrangement include heavy portable electric machinery, such as found in surface mining. Ground-fault current limits and relaying pickups are as stated in 1.11. For utilization voltages greater than 1000 V, the objective is to limit the maximum equipment frame potential to 100 V or less during ground-fault conditions by selecting the grounding resistor in the substation.

Part b) of Figure 2-10 relates to applications where a portable power center (or unit substation) is connected to distribution (or primary distribution), implying that utilization equipment is operating at a lower voltage than distribution. The power transformer configuration is selected to separate ground-fault conditions in the utilization portion from distribution (i.e., delta-wye, delta-delta, or wye-delta connected). The pickup for all ground-fault relays is typically set at 40% of the established ground-current limit.

Zero-sequence relaying (50G) provides primary protection (residual relaying is sometimes used), and potential relaying (59) about the grounding resistor can be used for backup ground-fault protection. The backup relays are often definite time with typical delays from 0.1 s to 0.25 s.

 Copyright © 2007 IEEE. All rights reserved.

Authorized licensed use limited to: COLORADO SCHOOL OF MINES. Downloaded on October 04,2023 at 04:18:37 UTC from IEEE Xplore. Restrictions apply.

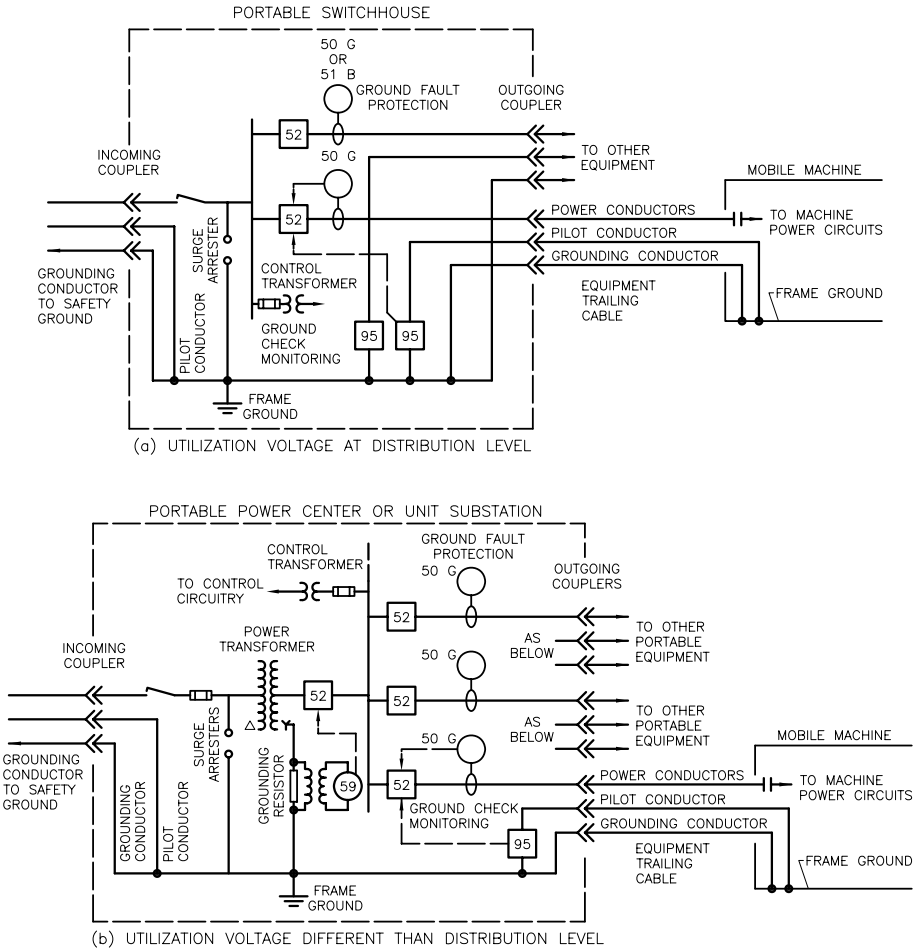

Figure 2-10—Frame grounding of ac portable or mobile machinery as part of a safety ground system

Ground-current limits vary as to application and system voltage. For utilization equipment at less than 1000 V, the maximum ground-current limit must be 25 A or less, but common practice is 15 A. The 100 V maximum frame potential limit (for sizing the grounding resistor) applies to surface or underground utilization equipment greater than 1000 V. This frame potential includes that which might be developed across the grounding conductors (in the distribution system) to the safety ground bed. Regardless, a ground-current limit from 15 A to 25 A is typical.

An exception to the preceding ground-current limits is found in underground gassy mines (e.g., coal) for face-mining equipment. Recent trends in long-wall mining have been toward 2400 V or 4160 V utilization. Here, the maximum ground-fault current must be limited to 6.5 A or 3.75 A, respectively. Maximum ground-fault relay pickup is again 40%

Copyright © 2007 IEEE. All rights reserved.

Authorized licensed use limited to: COLORADO SCHOOL OF MINES. Downloaded on October 04,2023 at 04:18:37 UTC from IEEE Xplore. Restrictions apply.

of the current limit, and potential relaying about the grounding resistor for backup protection is required. In the direction of improving personnel safety, some U.S. mines with 2400 V face equipment (individual equipment powers are up to 1100 hp) are using 625 mA ground-current limits and are successfully employing a ground-fault relaying pickup at 90 mA for primary protection.

Ground-check monitoring to verify grounding conductor continuity is required on all ac portable or mobile (heavy) utilization equipment. Use of an insulated pilot conductor is shown in Figure 2-10; however, pilotless-type monitors find wide application. Ground-check monitoring is not required on utilization equipment used for long-term fixed location installations.

In many mine power systems, particularly underground, some ac distribution power is converted to dc to power trolley systems and mobile dc equipment. The mobile machinery is typically powered from rectifiers located in the mining area, oftentimes included in a power center also serving ac utilization equipment. Except for the trolley system, all dc utilization equipment is also connected (along with the ac equipment) via grounding conductors to a common safety ground bed.

Figure 2-11 shows three equipment grounding schemes with varying ground-fault protection. The first two are preferred from a safety standpoint and utilize a separate grounding conductor. Part a) of Figure 2-11 illustrates neutral shift relaying, employing detection by two dc unbalance relays (64). While sensitive, this scheme is not selective for multiple dc equipment loads. Part b) of Figure 2-11 shows the use of differential current dc ground-fault protection, where a grounding resistor limits dc ground-fault current, typically to 15 A. Ground faults are detected using either a saturable reactor or saturable transformer relaying scheme. Both techniques only sense dc unbalance in the conductors that pass through the sensor; thus, selective dc ground-fault relaying can be realized. Typical relay pickup is from 4 A to 6 A.

The diode ground system in part c) of Figure 2-11 permits the use of a two-conductor cable without a separate grounding conductor. The machine frame is tied to the grounded negative conductor by means of a grounding diode. In series with the diode is a ground-fault device (not shown on the figure) having a pickup setting no greater than 25% of the forward current rating of the diode. The device trips the contactors located in the machine. Major disadvantages of this scheme are (1) some ground faults cannot be detected; (2) only faults downstream from the machine contactors can be cleared; and (3) the diode can fail in an open mode, ungrounding the frame.

As shown in Figure 2-12, neither conductor to a dc trolley system (rail haulage) is tied to the rectifier station frame ground. However, because the track contacts the mine floor (earth), the negative conductor for the trolley system is grounded, often with a low resistance. For this reason, the ac grounding system must be isolated from the trolley system; otherwise, dc may appear in the ac grounding system. If an ac ground current is present, it will be offset by the dc level. Two undesirable effects of dc offset currents on the ac grounding system are nuisance tripping and intermachine arcing. To help minimize problems, either the rectifier stations should not be located closer than 7.6 m (25 ft) from the track or the rectifier frames should be insulated from the floor.

 Copyright © 2007 IEEE. All rights reserved.

Authorized licensed use limited to: COLORADO SCHOOL OF MINES. Downloaded on October 04,2023 at 04:18:37 UTC from IEEE Xplore. Restrictions apply.

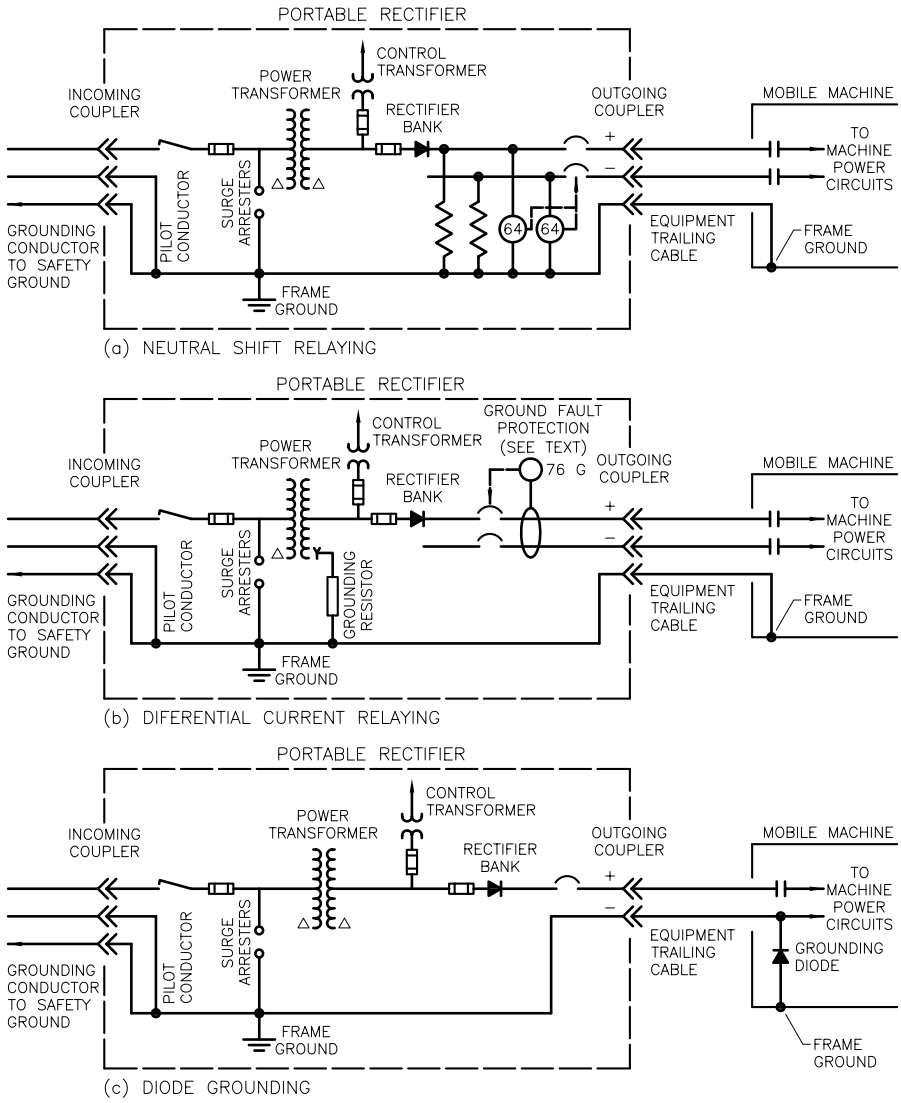

Figure 2-11— Frame grounding of dc portable or mobile machinery as part of a safety ground system

Copyright © 2007 IEEE. All rights reserved.

Authorized licensed use limited to: COLORADO SCHOOL OF MINES. Downloaded on October 04,2023 at 04:18:37 UTC from IEEE Xplore. Restrictions apply.
Affordable Wire Management, Exhibit No. EX1019
Case No. IPR2024-00182
Page 113 of 225

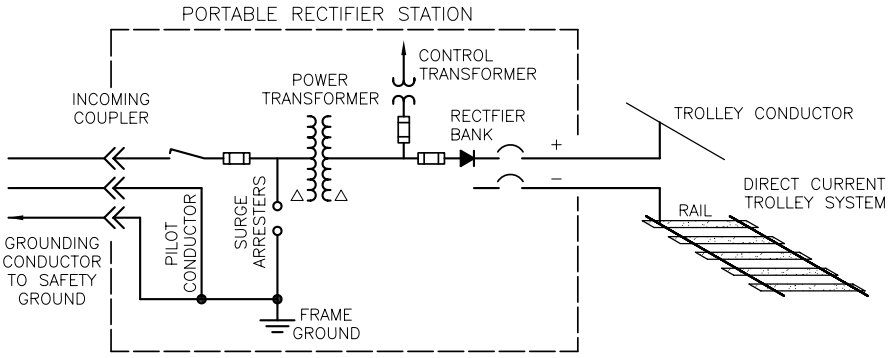

Figure 2-12—Grounding connections of dc trolley systems fed by a safety ground system

2.7 Interior wiring systems

2.7.1 General

In about the year 1893, a nationwide code of acceptable installation practice for electric power systems within buildings, such as residences, factories, and commercial buildings, was adopted. These rules are now a publication of the National Fire Protection Association (NFPA) and are documented in the NEC. This document is reviewed every 3 years on the basis of suggestions or criticisms submitted by interested individuals or organizations, and revisions or amendments are made accordingly. An article of the NEC is devoted to the subject of grounding. All equipment grounding system designs for installation within buildings of the types named should recognize and conform to the minimum requirements contained in the NEC. Basically, the NEC designates minimum acceptable limits for safety that may not be adequate for a particular application and may not necessarily provide for the efficient or practical use of high technology utilization equipment. The minimum requirements should be expanded in a more conservative direction as far as the system designer considers appropriate based on specific project and site conditions and in accordance with the recommendations of this recommended practice.

2.7.2 Service equipment

The term *service equipment* (see NEC) applies to the switching and protective equipment installed where the electric power from the utility is considered to enter the building, structure, or site. The required installation practices and protective equipment employed at and downstream of the service equipment are designed to ensure an electric power system that will not create fire or explosion hazards, dangerous electric shock voltage exposure to occupants, or an unfavorable electrical ambient condition within buildings. The electric

 Copyright © 2007 IEEE. All rights reserved.

Authorized licensed use limited to: COLORADO SCHOOL OF MINES. Downloaded on October 04,2023 at 04:18:37 UTC from IEEE Xplore. Restrictions apply.

power conductors from the utility that delivers power to the establishment, the service entrance conductors, do not enjoy the quality of protection afforded all circuits extending beyond the service equipment. An electric fault in these conductors may create a severe arcing fault that may persist for an extended interval and represent a dangerous source of fire ignition. The rules in the NEC make clear the intent that all grounding electrodes, including external water piping and effectively grounded metal building frames, be bonded to the equipment grounding system at the building supply equipment.

The intended overall purpose of the grounding rules is to achieve, as nearly as practical, a zero potential difference condition between electrical EGCs, the frames of electrical equipment, metal raceways that enclose electrical conductors, and the various items of exposed metal building frames and metal piping within the building. To any person within the building, this absence of electric shock voltage exposure continues unchanged, even though the grounded electric service conductor assumes a substantial voltage deviation from mean earth potential.

The creation of voltage differences between these designated exposed metal parts within the building will be the result of unplanned, unwanted current flow through these conducting members, usually as a result of an insulation failure on an energized power conductor.

2.7.3 Interior electric circuits

With every electric power circuit extending from the service equipment or building supply equipment into the building interior supplying electric power to equipment or apparatus that must be grounded, an EGC must be run with the power conductors. In most cases, the metal conductor enclosure (e.g., tubular metal raceway or cable armor) or cable tray itself is permitted to serve as the grounding conductor (see the NEC, Article 250-118). The equipment and apparatus requirement for grounding is accomplished by an electrical bond between the frame (or structure) of such equipment (or apparatus) and the EGC run with that electric circuit. The grounding conductor is not intended to carry nor should it be connected to carry any normal-load current. Thus, the grounding conductor maintains the desired zero potential difference concept throughout the extent of the EGC harness. Only when unplanned, unwanted fault currents flow along these conductors will there be observed voltage differences.

2.7.4 Thermal withstand

2.7.4.1 General

When metallic conduit is used as an EGC, no special considerations are necessary for fault duty of the conduit. When a copper conductor is used to supplement the metallic conduit or where a conductor is necessary, such as in nonmetallic conduit, the design should be evaluated to ensure that the conductor thermal rating is not exceeded. Exceeding the thermal rating can have the following two effects:

Copyright © 2007 IEEE. All rights reserved.

Authorized licensed use limited to: COLORADO SCHOOL OF MINES. Downloaded on October 04,2023 at 04:18:37 UTC from IEEE Xplore. Restrictions apply.

a) Increased temperature can damage the insulation either of the EGC in case it is insulated or of adjacent phase conductors, especially when the grounding conductor is bare, rendering them unusable following fault clearing.

b) Excessive temperature can fuse the EGC, clearing the fault current path but rendering faulted equipment unsafe due to elevated voltages.

Thermal stress is expressed in terms of I^2t where I is the rms fault current and t is the time to clear the fault. Thermal stress can be excessive due to high current or to long clearing time.

2.7.4.2 Insulation damage

Damage to thermoplastic, cross-linked polyethylene, and ethylene propylene rubber insulation is defined by Equation (2.3a) for copper conductors and Equation (2.3b) for aluminum conductors:

$$\frac{I^2 t}{A} = 0.0297 \text{ in}\left[\frac{T_m + 234}{T_i + 234}\right] \tag{2.3a}$$

$$\frac{I^2 t}{A} = 0.0125 \text{ in}\left[\frac{T_m + 234}{T_i + 234}\right] \tag{2.3b}$$

where

I = fault current through conductor-amperes

A = conductor cross-sectional area-circular mils

t = time of fault-seconds

T_i = initial operating temperature-degrees Celsius

T_m = maximum temperature for no damage-degrees Celsius

The initial temperature, T_i, is often taken as the conductor maximum operating temperature rating rather than the actual operating temperature. This is a conservative approach but may result in conductor oversizing by one trade size.

The maximum temperature, T_m, is given as 150 °C for thermoplastic insulation and 250 °C for cross-linked polyethylene and ethylene propylene rubber insulation. If the EGC is undersized for the fault current and the clearing time, insulation damage to phase conductors in a conduit may occur due to the proximity of the EGC to the phase conductor. If fusing is a criterion, then a final temperature of 1000 °C (1832 °F) for copper and 630 °C (1166 °F) for aluminum may be used (see Kaufmann, “Application Limitations”).

2.7.4.3 Automatic interrupting devices

All automatic interrupting devices, whether fuse or circuit breaker, require a definite time to accomplish current interruption. Most devices are inverse time in that the clearing time

 Copyright © 2007 IEEE. All rights reserved.

Authorized licensed use limited to: COLORADO SCHOOL OF MINES. Downloaded on October 04,2023 at 04:18:37 UTC from IEEE Xplore. Restrictions apply.

is less if the current is higher. Each device, though, has an upper limit of maximum speed of clearing determined by physical considerations of mass and energy.

Single-pole interrupters fuses are used extensively to protect polyphase circuits. A ground fault on one phase could result in an I^2t duty on the EGC that exceeds its thermal rating, even if the phase interrupter interrupts the faulted phase current with an I^2t let-through no greater than the EGC rating. Clearing of the faulted phase does not necessarily stop the ground-fault current. Current may flow in the unfaulted phases, through the load, and back to the faulted phase conductor. Since the ground-fault current is reduced due to the longer fault current path through the load, the time for the single pole phase interrupters to operate would be increased. Although the ground-fault current would probably be reduced, the increased time could cause thermal damage.

Three-phase circuit breakers often have adjustable time-current characteristics. In the simplest form, the phase overcurrent sensing magnetic or solid-state pickup for instantaneous operation may be adjusted from about 300% to 500% of overcurrent rating at the low end to about 800% to 1000% of overcurrent rating at the high end. If the ground-fault circuit is designed for a minimum of 500% of overcurrent rating, then a high pickup could result in a long response time and considerable damage, especially for an arcing ground fault. There is a tendency to set the instantaneous phase overcurrent pickup, whether magnetic or solid-state, as high as possible to avoid nuisance tripping due to high initial inrush currents. This practice is not recommended, as the overcurrent device may then not be capable of protecting the EGC within its short-circuit rating. The attempted use of an overcurrent protective device to protect for arcing ground faults is a misapplication of the phase overcurrent protective device (see 2.7.4.5). More sophisticated circuit-breaker trip devices may have adjustable time delays that permit shaping the time-current curve to coordinate with both upstream and downstream devices. There is a tendency to set the time delay as long as possible to achieve coordination with as many downstream overcurrent protective devices as possible. Setting of high-current pickup to excessively high values or increasing time delays to high values could cause thermal damage in the EGC.

2.7.4.4 Equipment grounding conductor sizing

EGCs should be sized to provide adequate fault current to insure operation of the circuit protective device. The NEC table for *minimum size equipment grounding conductor* should be recognized for what it has stated, namely the minimum size conductor that may be used, with no endorsement of adequacy. The conductor must have the capacity to safely conduct any fault current imposed upon it and to have sufficiently low impedance to limit the voltage to ground and to facilitate the operation of the overcurrent device even if the necessary conductor size is larger than given in the table. An EGC installed in a metallic raceway and considered to be supplementary or redundant to the conduit should be sized in the same manner without consideration for the presence of the metallic raceway. It should be noted that the NEC has rules to cover the sizing of EGCs “of the wire type.”

Selection of an EGC sized in accordance with the NEC will not necessarily provide either a “safe” system or one that is free from potential insulation damage. Where a separate

Copyright © 2007 IEEE. All rights reserved.

Authorized licensed use limited to: COLORADO SCHOOL OF MINES. Downloaded on October 04,2023 at 04:18:37 UTC from IEEE Xplore. Restrictions apply.

EGC is used to supplement a metallic conduit grounding system, it is difficult to determine the division of fault current between the conductor and the conduit. It is possible that past ground faults in metallic conduit systems have not caused thermal damage because the maximum ground-fault current did not flow through the conductor.

The preceding considerations do not hold for EGCs in nonmetallic conduit. In this case, all the ground-fault current will flow in the EGC and thermal damage must be considered. As an example, consider a 400 A feeder with a 3 AWG EGC sized from the reference table. Using an initial temperature of 60 °C and a final temperature of 250 °C for cross-linked polyethylene insulation, $I^2t = 17.8 \times 10^6$. If the ground-fault current is designed to be a minimum of 500% of rated current, then the protective device must clear the fault within 4.5 s in order to limit the final temperature to less than 250 °C. Design of the ground-fault current to be a minimum of 800% of rated current will reduce the protective device required clearing time to 1.7 s.

At 500% of rated current, many overcurrent protective devices, both fuse and circuit breaker, will not clear for over a half minute at their maximum setting. Thus, it is important that the specific overcurrent device be a part of the EGC circuit design, using the maximum available time delay of an adjustable breaker as criteria. Choosing the appropriate size of the EGC will permit standard overcurrent devices to adequately protect EGCs from thermal damage. Such standard devices are normally applied because of availability and their need to achieve system coordination. Faster acting overcurrent devices or ground-fault sensing equipment may be used to protect an existing EGC but they will normally increase equipment costs and degrade system performance.

2.7.4.5 Ground-fault sensing

Use of a phase overcurrent device to detect and clear a ground fault is not ideal. The phase overcurrent device may be designed to withstand overloads for a considerable length of time and yet be able to clear very high fault currents. Ground faults are typically low level and may be less than the rating of the phase overcurrent device. Additionally, since ground faults are often of an arcing nature, any delay in clearing the ground fault will result in material damage.

A ground fault can be detected in one of three ways: (1) ground return, (2) zero sequence, and (3) differential current. The three methods are shown in Figure 2-13.

Ground-return sensing is only applicable at the source transformer or generator. (See 1.6.3 for limitations due to multiple sources.) The connection from the transformer to ground is sensed for current flow. Since normal-load current should not return to the source through the ground on this conductor, any current sensed will be a ground-fault current [see part a) of Figure 2-13].

Where the source grounding conductor is not available such as at a feeder location, a single current transformer placed around the phase conductors and the neutral, if it exists, will sense zero-sequence or ground currents. [See part b) of Figure 2-13.] If no ground-fault current exists, the magnetic fields of each of the load conductors will cancel and there will be no output from the current transformer. If a ground-fault current exists, then

 Copyright © 2007 IEEE. All rights reserved.

Authorized licensed use limited to: COLORADO SCHOOL OF MINES. Downloaded on October 04,2023 at 04:18:37 UTC from IEEE Xplore. Restrictions apply.

there is a net zero-sequence current in the load conductors, and the current transformer senses the resultant magnetic field.

Where current transformers are necessary for phase overcurrent protection, detection of ground-fault current can be obtained by a summation of the phase currents. If a ground-fault current exists, then the net sum of the phase currents and the neutral, if it exists, will not be zero. The connection shown in part c) of Figure 2-13 provides a vector sum of the load current. If the sum is not zero, the differential current will flow in the ground-fault relay. The ground-fault relay can be made extremely sensitive to low level ground faults and can operate with minimal delay. Its output is used to open an interrupting device and clear the ground fault.

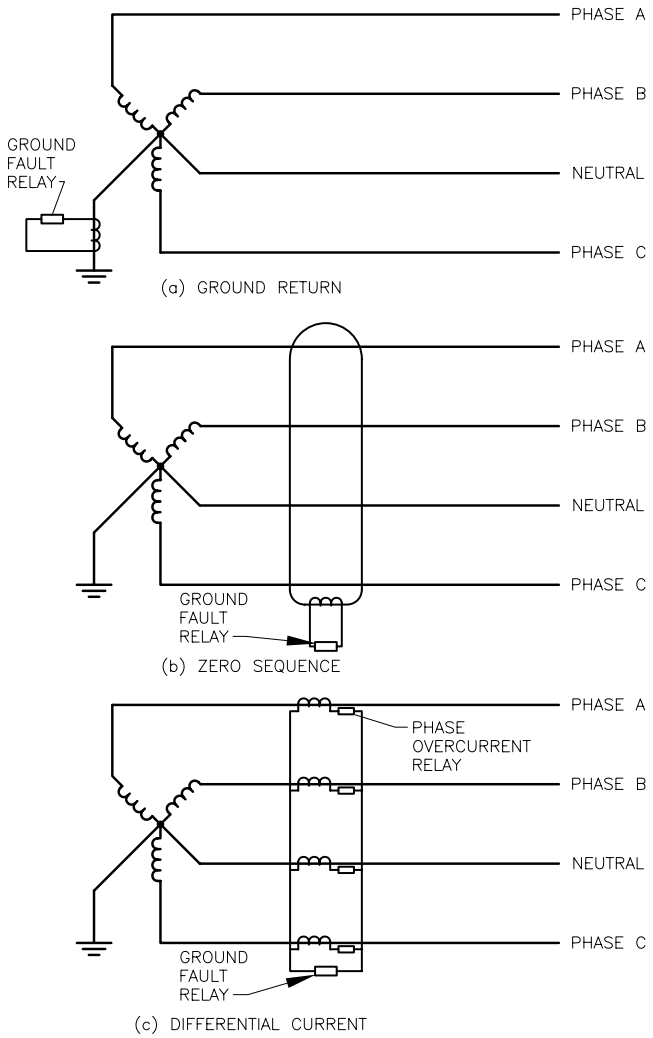

Figure 2-13—Ground-fault sensing

Copyright © 2007 IEEE. All rights reserved.

Authorized licensed use limited to: COLORADO SCHOOL OF MINES. Downloaded on October 04,2023 at 04:18:37 UTC from IEEE Xplore. Restrictions apply.

2.8 Interior unit substations and switching centers

2.8.1 Switching centers

Switching centers of modern vintage will for the most part consist of integral factory-designed metal-enclosed equipment. All internal components will be prepositioned to meet the applicable industry standards. Within this structure, the requirements for grounding conductors will have been recognized and supposedly provided for. With the knowledge that ground-fault current will seek a path in close physical proximity to the phase conductor that carries this current in the outgoing direction (see Beeman; Kaufmann, "Let's Be More Specific" and "Some Fundamentals"; Soares), it is appropriate to make a casual inspection to confirm that these requirements have been properly recognized.

The field installation problem boils down to a very simple one of assuring the integrity of the EGCs. Attention should be given to the proper termination of the EGC associated with each circuit entering the equipment. The EGC shall meet the cross-section requirements of that circuit. The physical routing should meet the objectives previously named. The terminating fittings should meet the requirements of an electrical junction expected to safely accommodate the high-magnitude short-time current flow. The terminating point on the switching structure should reflect the same capability.

One of the most neglected spots is the termination of a metal raceway when it is used as the EGC. Commonly, the switching structure contains no metal floor plate. The raceways, typically metal conduits, have been stubbed up through a concrete floor so as to terminate within the open floor area inside the boundaries set by the vertical side sheets of the equipment. The following two grounding conductor errors appear quite often:

a) The metal raceways or cable trays are not recognized as an electrical conductor (the EGC), and no connection is made to the stub end extending into the equipment enclosure.

b) The grounding lead from the raceway is thought to be needed only as a static drain and is connected to the ground bus with only a 4 mm^2 (12 AWG) conductor.

Metal raceways that serve as the EGC and terminate at the side sheets or cover plate of the equipment enclosure should be made up tight with double locknuts and supplemented with a bonding jumper. Proper termination of the raceway system to the equipment enclosure can prevent burnouts at the connection of sheet-metal panels to each other with bolts or sheet-metal screws, minimizing the risk of serious damage to the equipment and injury to personnel.

2.8.2 Transformation unit substations

Transformation unit substations present some additional problems. The electrical system derived from the transformer secondary represents a new electrical system with its own equipment grounding system requirements.

The treatment of all primary circuits entering the structural housing should be designed with the same criteria used for a simple switching structure. An effective grounding

 Copyright © 2007 IEEE. All rights reserved.

Authorized licensed use limited to: COLORADO SCHOOL OF MINES. Downloaded on October 04,2023 at 04:18:37 UTC from IEEE Xplore. Restrictions apply.

conductor running back to the source of primary power is required in case of a circuit fault to ground at any point along the primary circuits, within the enclosure containing the step-down transformer, within the primary circuit switching device, or within the transformer itself.

The secondary winding of the step-down transformer constitutes the point of origin of a new electrical system. It will be to this point that ground-fault currents associated with the radiating secondary circuits return. Hence, all secondary circuit EGCs are brought to a common junction point at this source transformer. For grounded system operation, this common junction point is bonded to the grounded circuit conductor (on the supply side of any overcurrent device or disconnecting means), to the source transformer frame or other metal enclosures, and to any adjacent metal member of the building structure or piping system if available. Should the secondary system be exposed to external sources of overvoltage surges, such as lightning, a check should be made to ensure the existence of an adequate grounding electrode connected to the central junction of secondary grounding conductors.

In general, the grounding electrode will be present for system grounding; however, the requirements for system grounding may not be adequate for the dissipation of lightning surges.

In most cases, it will be observed that the primary and secondary grounding conductor systems become interconnected at the step-down substation. This happens because the metal enclosure at the substation encloses energized conductors of both the primary system and the secondary system. Functionally, the two grounding conductor systems are independent of each other. (Had the transformation station consisted of an independent generator belt driven from an electric drive motor, the independence of the two grounding conductor systems would have been self-evident.)

2.9 Utilization equipment

The equipment grounding function at utilization equipment consists simply of providing an effective bonding connection between the nonelectrical metal parts of the terminal apparatus, which either enclose or are adjacent to energized conductors, and the EGC. The sizing and terminating of all such grounding conductors shall observe the same rules already established, which depend on the rating and character of the next upstream overcurrent protective device. In many cases where the electrical metal raceway or cable armor serves as the EGC of the circuit, the bonding connection to the utilization equipment frame consists simply of a good mechanical connection where the metal raceway terminates at the connection box or metal side or roof sheet of the terminal apparatus.

A bonding connection to an adjacent building metal structure in the case of fixed equipment is appropriate, although somewhat redundant. A separate EGC wire provides added assurance of continuity of the equipment ground.

Figure 2-14 displays the desired equipment to grounding conductor connection arrangement for a variety of power circuit patterns and clearly displays the distinction between the *grounding* and the *grounded* conductors for fixed equipment. Figure 2-15 displays a similar arrangement for portable equipment.

Copyright © 2007 IEEE. All rights reserved.

Authorized licensed use limited to: COLORADO SCHOOL OF MINES. Downloaded on October 04,2023 at 04:18:37 UTC from IEEE Xplore. Restrictions apply.

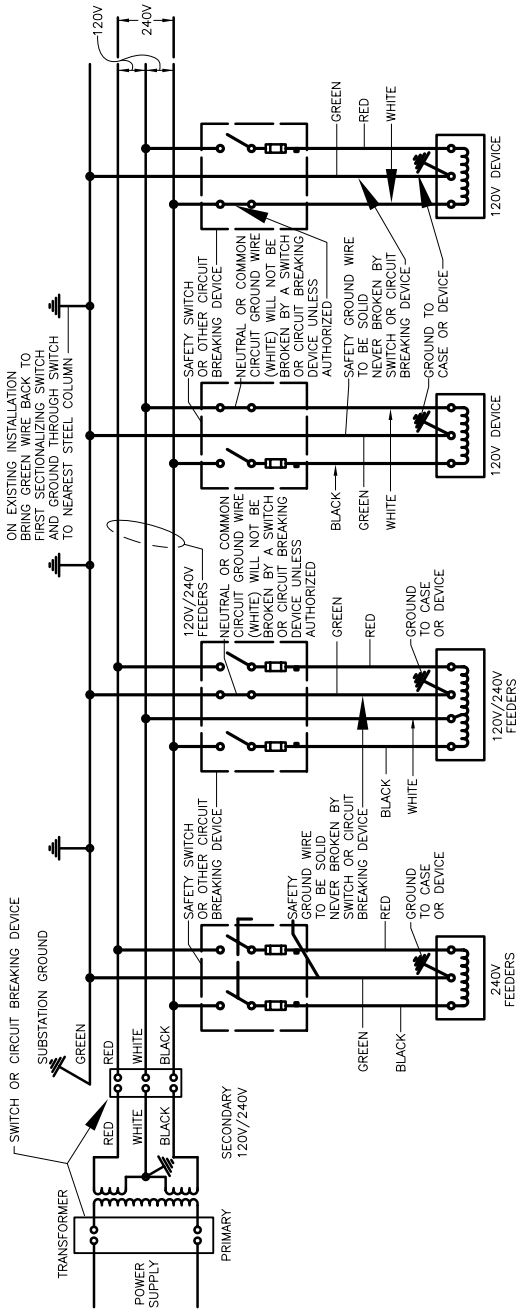

Figure 2-14—Typical supply conductor patterns of power circuits of utilization apparatus with emphasis on a distinction between grounding and grounded conductors of fixed equipment

 Copyright © 2007 IEEE. All rights reserved.

Authorized licensed use limited to: COLORADO SCHOOL OF MINES. Downloaded on October 04,2023 at 04:18:37 UTC from IEEE Xplore. Restrictions apply.

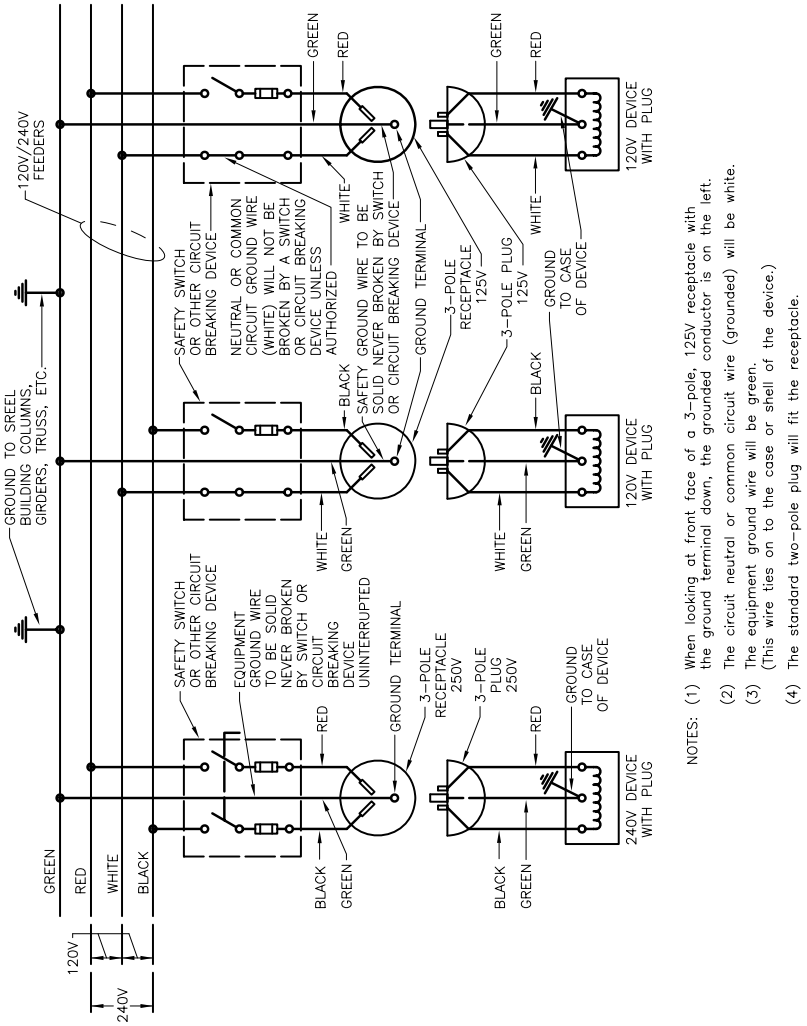

Figure 2-15—Typical supply conductor patterns of power circuits of utilization apparatus with emphasis on a distinction between grounding and grounded conductors of portable equipment

Copyright © 2007 IEEE. All rights reserved.

Authorized licensed use limited to: COLORADO SCHOOL OF MINES. Downloaded on October 04,2023 at 04:18:37 UTC from IEEE Xplore. Restrictions apply.

2.10 Normative references

The following referenced documents are indispensable for the application of this document (i.e., they must be understood and used, so each referenced document is cited in the text and its relationship to this document is explained). For dated references, only the edition cited applies. For undated references, the latest edition of the referenced document (including any amendments or corrigenda) applies.

Armstrong, H. R., and Simpkin, L. L., "Grounding Electrode Potential Gradients from Model Tests," *AIEE Transactions on Power Apparatus and Systems,* vol. 79, October 1960, pp. 618–623.

Beeman, D. L., Ed., *Industrial Power Systems Handbook.* New York: McGraw-Hill, 1955.

Bisson, A. J., and Rochau, E. A., "Iron Conduit Impedance Effects in Ground Circuit Systems," *AIEE Transactions on Applications and Industry,* vol. 73, July 1954, pp. 104–107.

Bodle, D. W., "Earth Potential Distribution Associated with Power Grounding Structures," *AIEE Conference Paper CP 62–205,* 1962.

Coleman, W. E., and Frostick, H. G., "Electrical Grounding and Cathodic Protection at the Fairless Works," A*IEE Transactions on Applications and Industry,* vol. 74, March 1955, pp. 19–24.

Gienger, J. A., and Lloyd, R. L., "Bibliography on Electrical Safety/1930 through 1953," Sec. C, *AIEE Publication S-69,* 1969.

Gienger, J. A., Davidson, O. C., and Brendell, R. W., "Determination of Ground-Fault Current on Common AC Grounded-Neutral Systems in Standard Steel or Aluminum Conduit," *AIEE Transactions on Applications and Industry,* vol. 79, May 1960, pp. 84–90.

Goers, R. E., "Quiet-Wiring Zone," *Conference Record of the 1968 Third Annual Meeting of the IEEE Industry and General Applications Group,* pp. 249–253.

"Grounding," in *McGraw-Hill Encyclopedia of Science and Technology*. New York: McGraw-Hill, 1970.

IEEE Std 80™, IEEE Guide for Safety in AC Substation Grounding.[4, 5]

IEEE Std 141™-1986, IEEE Recommended Practice for Electric Power Distribution for Industrial Plants (*IEEE Red Book*™).

[4]IEEE publications are available from the Institute of Electrical and Electronics Engineers, 445 Hoes Lane, P.O. Box 1331, Piscataway, NJ 08855-1331, USA (http://standards.ieee.org/).

[5]The IEEE standards or products referred to in this clause are trademarks of the Institute of Electrical and Electronics Engineers, Inc.

 Copyright © 2007 IEEE. All rights reserved.

Authorized licensed use limited to: COLORADO SCHOOL OF MINES. Downloaded on October 04,2023 at 04:18:37 UTC from IEEE Xplore. Restrictions apply.

Kaufmann, R. H., "Application Limitations of Single-Pole Interrupters in Poly-Phase Industrial and Commercial Building Power Systems," *IEEE Transactions on Industry and General Applications,* vol. 82, November 1963, pp. 363–368.

Kaufmann, R. H., "Important Functions Performed by an Effective Equipment Grounding System," *IEEE Transactions on Industry and General Applications,* vol. IGA-6, No.6, November/December 1970, pp. 545–552.

Kaufmann, R. H., "Let's Be More Specific About Equipment Grounding," *American Power Conference Transactions,* 1962; General Electric Bulletin GER-1974.

Kaufmann, R. H., "Some Fundamentals of Equipment-Grounding Circuit Design," *AIEE Transactions on Applications and Industry,* vol. 73, November 1954, pp. 227–232.

Kaufmann, R. H., "The Magic of I^2t," *IEEE Transactions on Industry and General Applications,* vol. IGA-2, September/October 1966, pp. 384–392.

Lee, R. H., and Fagan, E. J., "The Use of Concrete-Enclosed Reinforcing Rods as Grounding Electrodes," *Conference Record of the 1969 Fourth Annual Meeting of the IEEE Industry and General Applications Group,* pp. 155–166.

NFPA 70, National Electrical Code® (NEC®).[6]

Redding, D., and O'Brien, A., "Large Loss Fires in the United States during 1984," *Fire Journal,* November 1985, pp. 17–25, 68–84.

Schmidt, W. C., "Electrical Noise in Control System Installations," *Conference Record of the 1968 Third Annual Meeting of the IEEE Industry and General Applications Group,* pp. 229–238.

Soares, E. C., *Grounding Electrical Distribution Systems for Safety.* Wayne, NJ: March Publishing Company, 1966.

Thapar, B., and Puri, K. K., "Mesh Potentials in High-Voltage Grounding Grids," *IEEE Transactions on Power Apparatus and Systems,* vol. PAS-86, February 1967, pp. 249–254.

Willard, G., "The Prevention and Treatment of Noise in Control Signals," *Conference Record of the 1968 Third Annual Meeting of the IEEE Industry and General Applications Group,* pp. 239–248.

[6]The NEC is published by the National Fire Protection Association, Batterymarch Park, Quincy, MA 02269, USA (http://www.nfpa.org/). Copies are also available from the Institute of Electrical and Electronics Engineers, 445 Hoes Lane, P.O. Box 1331, Piscataway, NJ 08855-1331, USA (http://standards.ieee.org/).

Copyright © 2007 IEEE. All rights reserved.

Authorized licensed use limited to: COLORADO SCHOOL OF MINES. Downloaded on October 04,2023 at 04:18:37 UTC from IEEE Xplore. Restrictions apply.

2.11 Bibliography

[B1] Bullard, W. R., "Grounding Principles and Practice IV: System Grounding," *Electrical Engineering,* vol. 64, April 1945, pp. 145–151.

[B2] *Code for Protection Against Lightning* (Handbook 46). Boulder, CO: U.S. Department of Commerce, National Bureau of Standards.

[B3] Dalziel, C. F., "Dangerous Electric Currents," *AIEE Transactions,* vol. 65, 1946, pp. 579–584 and 1123–1124.

[B4] Dalziel, C. F., "Effects of Electric Shock on Man," *IRE Transactions on Medical Electronics,* vol. PGME-5, July 1956, pp. 44–62.

[B5] Elek, A., "Proper Grounding Reduces Hazards," *Electrical World,* February 16, 1959, p. 78.

[B6] Horn, R. S., "Ground Your Power Station Safely," *Power Engineering,* January 1959, p. 85.

[B7] Jensen, C., "Grounding Principles and Practice-II: Establishing Grounds," *Electrical Engineering,* vol. 64, February 1945, pp. 68–74.

[B8] Johnson, A. A., "Grounding Principles and Practice-III: Generator-Neutral Grounding Devices," *Electrical Engineering,* vol. 64, March 1945, pp. 92–99.

[B9] Kaufmann, R. H., and Page, J. C., "Arcing Fault Protection for Low-Voltage Power Distribution Systems-Nature of the Problem," *AIEE Transactions on Power Apparatus and Systems,* vol. 79, June 1960, pp. 160–167.

[B10] Lee, R. H., "Ground Fault Magnitude Determination and Human Safety from Fault-Return Path Impedance," *Conference Record of the 1967 Second Annual Meeting of the IEEE Industry and General Applications Group,* pp. 487–498.

[B11] Lee, R. H., "Impedance of Trays as Fault Return Conductors," *Conference Record of the 1967 Second Annual Meeting of the IEEE Industry and General Applications Group,* pp. 477–485.

[B12] Mackenzie, W. F., "Impedance and Induced Voltage Measurements on Iron Conductors," *AIEE Transactions on Communication and Electronics,* vol. 73, June 1954, pp. 577–581.

[B13] O'Conner, J. J., "Industrial Electrical Systems Reliability Takes on Added Meaning," *IEEE Transactions on Industry and General Applications,* vol. IGA-4, July/ August 1968, pp. 354–355.

[B14] Peach, N., "Protect Low-Voltage Systems from Arcing Fault Damage," *Power Magazine,* April 1964.

 Copyright © 2007 IEEE. All rights reserved.

Authorized licensed use limited to: COLORADO SCHOOL OF MINES. Downloaded on October 04,2023 at 04:18:37 UTC from IEEE Xplore. Restrictions apply.

[B15] *Power Distribution Systems of Open Pit Mines,* General Electric Company, Technical Bulletin GET 238 lA.

[B16] Rudenberg, R., "Grounding Principles and Practice I: Fundamental Considerations on Ground Currents," *Electrical Engineering,* vol. 64, January 1945, pp. 1–13.

[B17] Shields, F. J., "The Problem of Arcing Faults in Low-Voltage Power Distribution Systems," *IEEE Transactions on Industry and General Applications,* vol. IGA-3, January/ February 1967, pp. 15–25.

Copyright © 2007 IEEE. All rights reserved.

Authorized licensed use limited to: COLORADO SCHOOL OF MINES. Downloaded on October 04,2023 at 04:18:37 UTC from IEEE Xplore. Restrictions apply.

 Copyright © 2007 IEEE. All rights reserved.

Authorized licensed use limited to: COLORADO SCHOOL OF MINES. Downloaded on October 04,2023 at 04:18:37 UTC from IEEE Xplore. Restrictions apply.

Affordable Wire Management, Exhibit No. EX1019
Case No. IPR2024-00182
Page 128 of 225

Chapter 3
Static and lightning protection grounding

3.1 Introduction

3.1.1 Overview

This chapter covers static electricity, its generation, proven methods of minimizing the hazards of this phenomenon by grounding and other methods, and lightning-protection grounding.

3.1.2 General

A detailed study of static electricity is not made in this chapter. For more detailed information on this subject, various references are cited (see Beach, *Electrostatic Hazards and Their Control* and "Grounding Principles and Practice"; Eichel; Gally; Harper; Klinkenberg and Van Der Minne; Loeb; "Static Electricity," in *Handbook of Industrial Loss Prevention;* "Static Electricity," Circular C-438).[1] This material will serve as a guide for electrical engineers who are involved with this phenomenon so that they can recognize a hazardous situation and provide suitable safeguards.

Lightning-protection grounding is essential for the protection of buildings, transmission lines, and electrical equipment from lightning discharges and surges. A brief description is given of the nature of lightning; the need for protection against lightning for various types of structures, buildings, and equipment; the requirements for protection; and of practices for protection and grounding. This chapter does not cover details of calculations in sizing lightning diverters and methods of selecting lightning protective devices. The engineer responsible for lightning protection is advised to use the referenced materials to make an analytical study of this subject.

3.2 Static grounding

3.2.1 Purpose of static grounding

The accumulation of static electricity on equipment, on materials being handled or processed, and on operating personnel introduces a potentially serious hazard in any occupancy where flammable or explosive liquids, gases, dusts, or fibers are present.

The discharge of an accumulation of static electricity from an object to ground or to another charged object of different voltage can be the cause of a fire or an explosion if it takes place in the presence of readily flammable materials or combustible vapor and air mixtures. Such fires and explosions have caused injury to personnel and loss of life, as well as millions of dollars of loss in property damage and business interruption.

[1]Information on references can be found in 3.4.

Copyright © 2007 IEEE. All rights reserved.

Authorized licensed use limited to: COLORADO SCHOOL OF MINES. Downloaded on October 04,2023 at 04:18:37 UTC from IEEE Xplore. Restrictions apply.

Protection of human life is the first objective in attempting to control static charges. Besides the danger to lives from explosions or fires that may result from a static spark, there is also the danger that a person, becoming startled when suddenly subjected to a static shock, may fall or accidentally come into contact with some moving equipment. The second aim in eliminating or mitigating static electricity is to minimize losses in the following categories:

a) Capital investment in buildings and equipment due to fires or explosions

b) Operating costs for storing flammable materials

c) Overhead and loss of production due to fires or explosions

d) Capital investment in sensitive electronic equipment due to excessive or rapidly changing voltage

e) Loss of electronically stored data due to voltage transients

If losses such as those listed can be substantially reduced by proper static control, the expenditure required to secure this protection is good insurance.

Static control may also be required for the improvement in manufacturing operations or in product quality. For example, static in grinding operations can prevent grinding to a fine degree. Static in certain textile operations causes fibers to stand on end instead of lying flat, which often affects the quality of the material. Static charges on materials handled by chutes or ducts have been known to cause clogging as a result of materials clinging to the inside of the chutes and ducts. In the printing industry, the control of static electricity is important to prevent damage to the printed images by the attraction of dust particles, and to prevent attraction of the ink to the underside of sheets that may be stacked above them, as well as to avoid possible ignition of vapors from flammable inks and solvents used in the process.

There are many other manufacturing processes or operations where static accumulations are either a fire or an explosion hazard or cause inferior products; for example, in grain elevators; in coating, spreading, and impregnating operations; with conveyor belts and pulleys; in dry cleaning; in blending and mixing; and in filling of tank cars, barges, trucks, aircraft, or other containers with flammable liquids. Each process or operation may require a different method to safeguard against the hazard. This is achieved by providing a means whereby charges may recombine harmlessly before sparking or by preventing accumulation of charges by grounding or bonding, humidification, or ionization.

3.2.2 Fundamental causes of static electricity

3.2.2.1 Theory of static generation

Static electricity is probably the earliest reported manifestation of electricity. The Greeks are on record as having observed this phenomenon in about 600 BC. They noticed that a piece of amber, when rubbed with another material, had the ability to attract or repel other objects of light weight, but scientific investigation of the phenomenon did not begin until some 23 centuries later.

 Copyright © 2007 IEEE. All rights reserved.

Authorized licensed use limited to: COLORADO SCHOOL OF MINES. Downloaded on October 04,2023 at 04:18:37 UTC from IEEE Xplore. Restrictions apply.

In a neutral or uncharged body, the electrons, which are the negative components of the atom, and the protons, which are the positive components, are present in exactly equal numbers, and these can be separated only by the expenditure of energy, usually in mechanical, thermal, or chemical form. Electrons are free to move from one molecule to another in solid conductive materials. Protons cannot move appreciably unless the atom moves. Only electrons are mobile in solids, whereas both electrons and protons are free to move in gases and liquids.

Static electricity is generated by the movement of electrons, which occurs when unlike materials are in contact with each other and are then separated. When two unlike materials are in intimate contact, electrons from one material move across the interface to the surface of the other, and their counterparts (protons) in equal numbers remain on the other body; an attractive force is thus established as equilibrium is achieved. When bodies are separated, electrons produce electrical charges on the objects separated, which show as an increase in voltage between the two surfaces.

If two materials that are good conductors are in contact with each other and are then separated, most of the excess electrons in one will return to the other before the separation is complete. But if either or both of them is an insulator and both are not grounded, both will display a charge because some of the excess electrons will be entrapped in one of them when separation occurs, and the insulating body is said to be *charged*. Actually, static charge is due to an excess or a deficiency in electrons, and a surface that has an excess or deficiency of one electron in every 100 000 atoms is very strongly charged. The voltage developed due to electrical charges is related to the amount of charge deposited on a body and to the capacitance of this body with respect to its surroundings. The relationship is expressed in Equation (3.1):

$$V = \frac{Q}{C} \tag{3.1}$$

where
V = voltage, in volts
Q = charge, in coulombs
C = capacitance, in farads

This voltage can continue to grow on an insulating body under the influence of continuous charge generation. At some voltage, the leakage of charge will be equal to the rate at which the charge is being placed on the insulated body, and a stabilized condition will be reached. If the leakage of charge through the insulating body is not rapid enough, a sparking voltage will be reached, and sparking will occur before stabilization is reached.

The voltage increase on separation could reach several thousand volts, but the charge is relatively immobile, so a spark from an insulated surface will usually not produce ignition.

Static electricity may be generated by the following:

a) Pulverized materials passing through chutes or pneumatic conveyors.
b) Belt drives when belts are of nonconductive material.

Copyright © 2007 IEEE. All rights reserved.

Authorized licensed use limited to: COLORADO SCHOOL OF MINES. Downloaded on October 04,2023 at 04:18:37 UTC from IEEE Xplore. Restrictions apply.

c) Gas, steam, or air flowing through an opening.

d) Motion that involves changes in the relative position of contacting surfaces, usually of unlike materials, liquid or solid, at least one of which usually is a poor conductor of electricity.

e) The human body in a low-humidity area may accumulate a dangerous static charge of several thousand volts by contact of shoes with floor coverings or by working close to machinery that generates static electricity.

3.2.2.2 Conditions affecting the production of static charges

The possibility of producing electrification (static charge) and the degree that it will be produced will depend mainly on the following:

a) Material characteristics

b) Speed of separation

c) Area in contact

d) Effect of motion between substances

e) Atmospheric conditions

These conditions are defined as follows:

Material characteristics. It has been previously stated that one of the materials or substances must have higher insulating properties than the other to at least some degree to generate a static charge between them. The physical forms may be solids, liquids, or gases. The solids may be in the form of sheeting, rods, etc., or may be broken up into particles that form a dust. The degree of electrostatic charge that may exist between two materials will be proportional to the difference in their dielectric constants. Even metals have dielectric constants, that of iron being 4.2, that of copper being 2.1, and that of aluminum being 4.8. For comparison, the dielectric constant of air is approximately 1.0, that of porcelain 5.7 to 6.8, and that of nylon 3.7 to 4.1. Also, the positive charge will usually show up on the material having the higher dielectric constant.

Speed of separation. As the speed of separation of two substances is increased, the chance for impounding the charges on the materials also increases, thus increasing the voltage differences between them. For example, electrification caused by the separation of a moving belt from a pulley increases directly with the belt speed, and electrification of aircraft in flight, caused by atmospheric water particles, dry snow, and ice crystals or dust increases approximately as the cube of the speed of the aircraft.

Area in contact. The area of the substances in contact has a direct bearing on the degree of electrification because a larger contact area means that more charge may be transferred from one substance to the other, though the charge density may be the same. In other words, the larger body receives or accumulates the larger quantity of charge.

Effect of motion between substances. Static electricity has often been called *frictional electricity,* but actually friction plays little part in the process of electrification, although the rubbing together does increase electrification. This is because, in the process of

 Copyright © 2007 IEEE. All rights reserved.

Authorized licensed use limited to: COLORADO SCHOOL OF MINES. Downloaded on October 04,2023 at 04:18:37 UTC from IEEE Xplore. Restrictions apply.

rubbing, more peaks on the surfaces are brought into contact, since surfaces that are smooth and flat to the eye are microscopically rough with peaks and valleys, and the electrons travel only where actual contact occurs. Also heating due to friction eases the transfer of electrons. Similarly, liquids sprayed or expelled from a nozzle, particularly if they impinge on a surface, often produce high voltage on the droplets of liquid and on the surface on which they impinge.

Liquid materials in a tank may accumulate static charges (1) as a result of deliberate agitation of the liquid, (2) because of tank motion, or (3) while the tank is being filled.

Another example of motion producing alternate contact and separation of materials is the passing of a belt over a pulley, and as previously pointed out, the higher the speed, the more often these alternations occur and the greater the static charge on the belt. The same principle applies to any sheeting passing over rolls, such as in the manufacture and processing of rubber materials, papers, or textiles. Rubber tires (see Pearson) rolling over streets and roads produce the same effect, and may account for static charges on automobiles, tank trucks, etc.

Atmospheric conditions. The fact that low humidity is related to the production of static is probably well known to everyone because of the personal discomfort experienced in touching a metal object on a dry day after having accumulated a charge by walking across a rug or coming into contact with some other insulating material. This shows clearly the hazard that can exist in an operation that may require controlled low-humidity conditions.

3.2.3 Magnitudes

3.2.3.1 General

The magnitude of static electricity quantities is different from that of power electricity. The voltage difference may reach thousands of volts, currents may be less than a millionth of an ampere (1×10^{-6} A), and resistances of less than one million ohms (1 MΩ) may cause a short circuit, as far as electrostatics is concerned.

3.2.3.2 Voltages possible

Voltages that have been observed in a few industries or have been created in tests are shown in Table 3-1. From Table 3-2, it can be seen that it is possible for voltages of 30 000 V to jump over 25 mm (1 in). Such a spark could readily release enough energy to ignite flammable mixtures.

Copyright © 2007 IEEE. All rights reserved.

Authorized licensed use limited to: COLORADO SCHOOL OF MINES. Downloaded on October 04,2023 at 04:18:37 UTC from IEEE Xplore. Restrictions apply.

Table 3-1—Range of static voltages produced by various processes

Type of equipment	Voltage range observed (kV)
Belted drives	60 to 100
Fabric handling	15 to 80
Paper machines	5 to 100
Tank trucks	Up to 25
Belt conveyors (grain)	Up to 25

Table 3-2—DC breakdown voltages point to plane

Distance		Voltage (kV)	
(mm)	(in)	Point +	Plane +
5	0.197	6	11
10	0.394	16	18
15	0.591	20	29
20	0.787	25	39
30	1.181	36	57
40	1.575	42	71
50	1.969	50	85
60	2.362	54	98
70	2.756	60	112
80	3.150	63	124
90	3.543	67	140

 Copyright © 2007 IEEE. All rights reserved.

Authorized licensed use limited to: COLORADO SCHOOL OF MINES. Downloaded on October 04,2023 at 04:18:37 UTC from IEEE Xplore. Restrictions apply.

3.2.4 Conditions required for a static charge to cause ignition

3.2.4.1 Ignition energy

In order for a static spark to produce ignition in a combustible vapor and air mixture, there must be sufficient energy stored in the charged body. The amount of energy that is stored and available from a capacitive-type discharge can be calculated by the formula shown in Equation (3.2):

$$E = \frac{1}{2}CV^2 \times 10^{-9} \tag{3.2}$$

where
C = capacitance, in picofarads (pF)
V = voltage, in volts (V)
E = energy, in millijoules (mJ)

Approximate values of capacitance, in picofarads, of some objects are as follows:

— Human being: 100 pF to 400 pF
— Automobile: 500 pF
— Tank truck (2000 gal): 1000 pF
— 3.6 m (12 ft) diameter tank with insulated lining: 100 000 pF

The energy necessary for ignition is dependent on several variables, such as the shape and spacing of the electrodes between which the spark occurs and the composition of the gas mixture, the gas temperature, and the pressure. Tests have shown that 0.25 mJ of stored energy is required to ignite an optimum mixture of saturated hydrocarbon gas and air, but where the voltage differences are less than 1500 V and capacitance is less than 222 pF, the resulting sparks are unlikely to cause ignition of such a mixture because the energy developed is less than 0.25 mJ. Acetylene gas used in industrial plants for cutting metal is exceptionally flammable. It needs only about 0.02 mJ of spark energy to ignite.

For static electricity to be able to cause ignition, in addition to the requirement of sufficient energy in the spark discharge, it must take place in an ignitable mixture. If the mixture is too lean or too rich, ignition will not occur.

For a complete discussion of the explosive limits of various gas and liquid mixtures, as well as the spark energy required to ignite such mixtures, see Beach, “Industrial Fires and Explosions from Electrostatic Origin.”

3.2.5 Measurement and detection of static electricity

3.2.5.1 General

The measurement of static electricity will have different magnitudes of electrical quantities than that from power electricity, so the techniques and instruments used for the

Copyright © 2007 IEEE. All rights reserved.

Authorized licensed use limited to: COLORADO SCHOOL OF MINES. Downloaded on October 04,2023 at 04:18:37 UTC from IEEE Xplore. Restrictions apply.

measurement and detection of static electricity are different. Instruments and devices used in measurements and detection are described in the following paragraphs.

3.2.5.2 Electrostatic voltmeter

As static charges are characterized by high voltage and low energy, instruments that have practically no current drain must be used for voltage measurements. The electrostatic voltmeter is such an instrument, and while it may not have high accuracy, it is sufficiently accurate to measure voltage for quantitative electrostatic analysis. Electrostatic voltmeters are available in several ranges from 100 V to 5000 V. These meters operate on the principle of electrostatic attraction between movable and stationary metal vanes. Practically no current is passed to maintain deflection. Portable models are available. These meters are moderately expensive, not too rugged, fairly sensitive, and do not indicate polarity.

3.2.5.3 Neon lamp tester

This device is very inexpensive and quite sensitive. It can be carried in one's pocket, so occasional checks for static electricity can conveniently be made. It will light up feebly when one terminal is grounded or held in the hand and the other makes contact with the charged body that carries a charge potential of 100 V or more. Adjustable series-parallel groupings of neon lamps and small capacitors can be arranged to give approximate quantitative information.

3.2.5.4 Solid-state electrometer

This instrument may be used to detect the presence of static electricity, but it should have very high input impedance so as to limit current drain. Instruments are available with an input impedance of 10^{15} ohm.

Electrometers use special field-effect solid-state devices having a very high input resistance and drawing a very low input current. The meter uses batteries, so it must be switched on before entering a charged area and switched off after leaving the area.

3.2.5.5 Electrometer amplifier

This instrument is generally used for the investigation of static electricity in the field and laboratory. It employs high resistance in the input circuit, and thus has low current drain. It can be used as a voltmeter, a charge meter, or a current meter. It is quite sophisticated and expensive and needs experienced operators to use it.

3.2.5.6 Generating voltmeter

A generating voltmeter, occasionally called a *field mill,* is a device to measure electrical field strength and produces an alternating current proportional to the electrical field by electrostatic induction, much as a conventional alternator produces alternating current by electromagnetic induction. This alternating current is electronically amplified, then rectified, and the output is fed to an indicating meter. The generating voltmeter usually

 Copyright © 2007 IEEE. All rights reserved.

Authorized licensed use limited to: COLORADO SCHOOL OF MINES. Downloaded on October 04,2023 at 04:18:37 UTC from IEEE Xplore. Restrictions apply.

consists either of a motor-driven variable capacitor or of linearly vibrating capacitor plates exposed to the electric field. The capacitor serves to *chop* the electric field, creating a periodically varying charge, which results in ac output. A chief drawback to the practical usefulness of the generating voltmeter, as normally built and used, is interpreting the meaning of its indication in a nonsymmetrical geometric environment.

3.2.5.7 Charge density meter

This is a variation of the generating voltmeter that is designed to operate immersed in a charged insulating liquid. The device is usually used in a pipe or with a constant-geometry outer shield. Under such conditions, the signals from this device can be interpreted in terms of the electrical environment in which it is working. Relaxation of space charges in the charge density meter after flow has been stopped provides a measurement of the liquid conductivity under actual conditions in the system at the location of the meter.

3.2.5.8 Static electricity detector

This is a commercially available instrument that detects the presence of static charges and gives both a visual and an audible alarm. It also contains an indicator to indicate the magnitude of the charge. This device is portable or may be installed in a permanent location with an antenna system installed in the operating areas to pick up the signal if static charges are present. Such an instrument is listed by Underwriters Laboratories, Inc. (UL), for class I, groups A, B, C, and D, and class II, groups E, F, and G hazardous locations. Some instruments may need batteries or line power to operate them. Such instruments must be judiciously handled in hazardous areas to eliminate the possibility of sparks or arcs due to any defect or fault. Test probes used in an area of explosive vapors should be highly insulated to avoid sparks.

3.2.6 Methods of static control

3.2.6.1 General

Static electricity generation cannot be prevented, but it can be mitigated or controlled by providing means of recombining separated charges as rapidly as they are produced and before sparking voltages are attained. Methods used include the following:

a) Grounding and bonding
b) Humidity control
c) Ionization
d) Conductive floors
e) Conductive footwear and casters
f) Special precautions
g) Proper maintenance

These methods may also be used in combination for effective control.

Copyright © 2007 IEEE. All rights reserved.

Authorized licensed use limited to: COLORADO SCHOOL OF MINES. Downloaded on October 04,2023 at 04:18:37 UTC from IEEE Xplore. Restrictions apply.

3.2.6.2 Grounding and bonding

Many static problems can be solved by bonding the various parts of the equipment together and grounding the entire system. Bonding (connecting the two objects together) minimizes voltage differences between conductive objects, thus preventing sparking between two bodies, as shown in Figure 3-1 and Figure 3-2.

Grounding minimizes voltage differences between objects and ground, as shown in Figure 3-3. Bonding and grounding should be done by bare or insulated wire, 6 AWG or 4 AWG (for mechanical strength), though the current is on the order of microamperes (10^{-6} A). Any ground adequate for power circuits or lightning protection is adequate for protection from static electricity. Even a ground resistance of 1 MΩ is adequate for static grounding. Where grounding or bonding wires are exposed to damage, they should be run in rigid metal conduit or pipe. Equipment or tanks inherently bonded or grounded by their contact(s) with ground do not need special means of bonding. For moving objects, a grounding brush or wipe of carbon, brass, or spring bronze may be used.

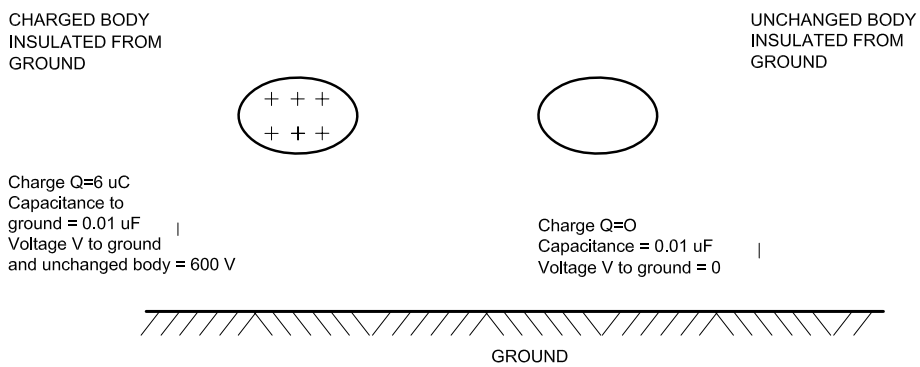

Figure 3-1—Charged and uncharged bodies insulated from ground

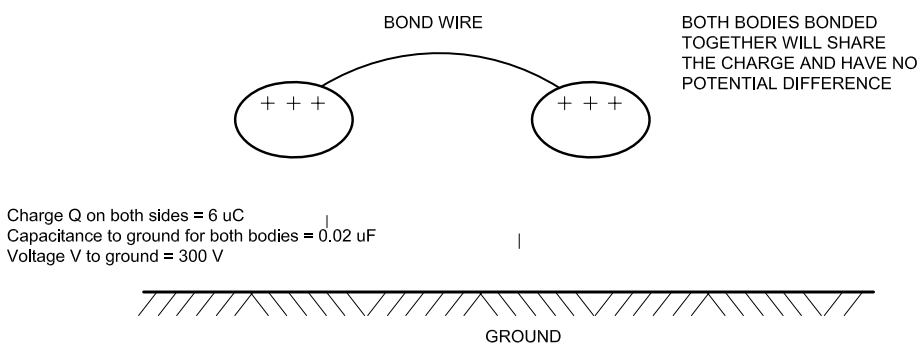

Figure 3-2—Both insulated bodies share the same charge

 Copyright © 2007 IEEE. All rights reserved.

Authorized licensed use limited to: COLORADO SCHOOL OF MINES. Downloaded on October 04,2023 at 04:18:37 UTC from IEEE Xplore. Restrictions apply.
Affordable Wire Management, Exhibit No. EX1019
Case No. IPR2024-00182
Page 138 of 225

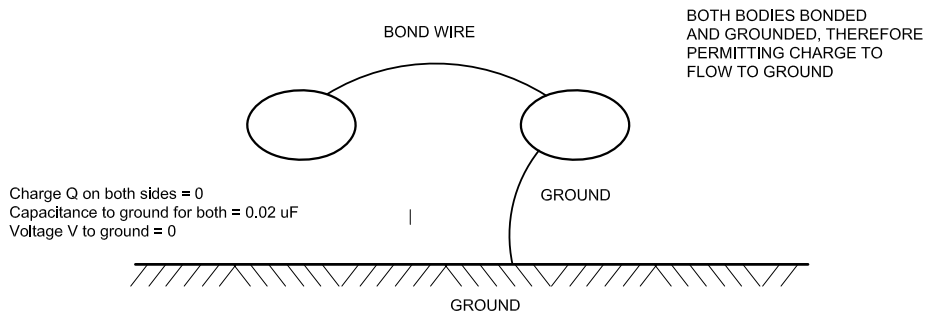

Figure 3-3—Both bodies are grounded and have no charge

Grounding, however, is not a cure for all static problems. For example, if the material being processed is rather bulky and has high dielectric characteristics, a static charge on the upper portion of the material is usually very effectively insulated from ground, and it may result in a spark discharge. In case of processes involving nonconducting material, such as paper, cloth, or rubber, it is not possible to drain off the static electricity charges by ordinary grounding and bonding. Also, charges may accumulate on the surface of low-conductivity liquids, such as most refined petroleum products. These charges cannot be removed by bonding or grounding. In such cases, other methods of control, such as ionization or humidification, should be utilized.

3.2.6.3 Humidity control

Many insulating materials, such as fabric, wood, paper, or concrete, contain a certain amount of moisture in equilibrium with the surrounding air. This moisture or relative humidity controls the surface conductivity of these insulating materials. The higher the humidity, the greater the conductivity. For example, the surface conductivity of plate glass at 50% relative humidity is about 1000 times its conductivity at 20% humidity. At normal humidity (30% or more) an invisible film of water provides an electrical leakage path over most solid insulating bodies and the clothes and shoes of a worker, which drains away static charges as fast as they are generated. When relative humidity is 30% or less, the same materials dry out and become good insulators, and static manifestations become noticeable and may cause fires from static sparks. Where high humidity does not affect the material adversely, this affords one of the best ways of controlling static electricity. Humidifying the whole atmosphere, or localized humidification, especially near the point where static electricity is accumulating, has proved to be a solution where static electricity has resulted in the adhesion or repulsion of sheets of papers, fibers, etc. In some cases, localized humidification by steam ejection provides satisfactory results without increasing the humidity in the whole area. The minimum value of relative humidity that is required for effective control of static electricity is difficult to determine and will vary with the process and the surrounding conditions. However, it is believed that where the relative humidity is maintained in the range of 60% to 70% at ordinary indoor temperatures, static accumulations are not likely to reach dangerous proportions. Where the process may be

Copyright © 2007 IEEE. All rights reserved.

Authorized licensed use limited to: COLORADO SCHOOL OF MINES. Downloaded on October 04,2023 at 04:18:37 UTC from IEEE Xplore. Restrictions apply.
Affordable Wire Management, Exhibit No. EX1019
Case No. IPR2024-00182
Page 139 of 225

affected adversely by humidity, or where the area may be air conditioned for process control or comfort, and where humidity will not noticeably decrease the resistivity (such as uncontaminated surfaces of most synthetic plastic and the surface of many petroleum liquids), then other methods of static control must be considered.

3.2.6.4 Ionization

In the process of ionization, the air molecules are overstressed; thus electrons are separated from the molecules. The electrons are negatively charged, and the molecules that have lost them become positive in polarity. When a charged object is brought in contact with ionized air, the static charge is dissipated. The charge is either conducted to ground through the ionized air, or the charged object attracts a sufficient number of positively or negatively charged ions from the air to neutralize it. Ionization of air can be obtained by flame, alternating electric fields generated by a high-voltage supply, ultraviolet light, or radioactivity. This can be achieved by several devices and methods. The most common are static comb or inductive neutralizer, electrical neutralizer, radioactive neutralizer, or open flames.

A static comb or inductive neutralizer is a nonelectrically energized low-cost device. The static comb is a metal bar equipped with a series of sharp needle points or a grounded metal wire surrounded with metallic tinsel. The ionization of air occurs through the charge concentration on the sharp points of the collector from the electric field owing to the charge on the object. The field is concentrated near the pointed object, and when the charge is above a minimum value, spontaneous ionization of air takes place. When a grounded static comb is placed close to the insulated charged body, ionization of the air at the needle points provides enough conductivity to make some of the charge leak away from the object. This method is usually employed to reduce the static charge from fabrics, paper, and power belts.

The electrical neutralizer, now available commercially, produces the conductive ionized air by sharply pointed conductors connected to a high-voltage supply. When placed near the moving or stationary charged surfaces, the charges are thereby neutralized at the surfaces or are leaked away to some adjacent grounded conducting body. These neutralizers are powered by the high-voltage secondary of a small step-up transformer.

Electrical neutralizers are used for removing static charges from cotton, wool, silk, or paper in process, manufacturing, or printing, but are not recommended in atmospheres having flammable vapors, gases, etc. Necessary precautions must be taken to protect operating and maintenance personnel from high-voltage circuits.

Radioactive neutralizers ionize the air by emission of alpha particles from radioactive material such as radium or polonium. In the application of these neutralizers, care must be taken to avoid harmful effects of radiation. Their use is regulated by the U.S. Nuclear Regulatory Commission.

Ionization of air can also be obtained by rows of small open flames, which may be used in paper printing presses where nonflammable ink is used.

 Copyright © 2007 IEEE. All rights reserved.

Authorized licensed use limited to: COLORADO SCHOOL OF MINES. Downloaded on October 04,2023 at 04:18:37 UTC from IEEE Xplore. Restrictions apply.

3.2.6.5 Conductive floors

Where extremely hazardous operating conditions exist, such as in the production of some explosives or in processes involving oxygen-enriched flammable vapor or gas mixtures that are susceptible to static ignition, the use of conductive floors or floor coverings may be required to prevent the accumulation of static charge by grounding personnel and conductive objects together, since the human body in a dry location can also accumulate a dangerous static charge. Where such flooring is required, it should be of nonsparking materials, such as conductive rubber, lead, or other conductive compounds.

The resistance of the floor should be less than 1 MΩ when measured between two electrodes placed 0.91 m (3 ft) apart anywhere on the floor. In addition, to protect personnel against electric-shock hazard, the resistance of the floor should be more than 25 kΩ when measured between an electrode placed at any point on the floor and a ground connection, and between two electrodes placed 0.91 m (3 ft) apart at any point on the floor. See NFPA 99, Section E6.6.8.2.7, for details of the required construction of the electrodes and the test method to be used. It is recommended that electrical equipment energized from a grounded system not be used or operated by persons standing on the floor.

If waxes or other floor preservatives are used, they should have conductive qualities. Conductive floors may increase in resistance with age and therefore should be tested at regular intervals.

3.2.6.6 Conductive footwear and casters

When conductive flooring is used, operators or others entering the area must wear conductive nonsparking footwear. Mobile equipment should make contact with the floor directly or through conductive rubber casters. Their resistance should be checked at regular intervals or before entering the work area.

Shoe testers are available for determining the resistance while the shoes are being worn. Such testers are essentially direct-reading ohmmeters with resistors to limit the short-circuit current to 0.5 mA.

Where conductive floors and shoes are required, the resistance between the wearer and ground must not exceed 1 MΩ, which is the total resistance of the conductive footwear on a person plus the resistance of the floor.

3.2.6.7 Special precautions

In addition to the use of conductive floors and shoes, other controls may be considered, such as the following:

a) Providing wearing apparel with low static-producing qualities
b) Establishing rigid operating procedures
c) Using conductive rubber mats where conductive flooring is not used throughout an area

Copyright © 2007 IEEE. All rights reserved.

Authorized licensed use limited to: COLORADO SCHOOL OF MINES. Downloaded on October 04,2023 at 04:18:37 UTC from IEEE Xplore. Restrictions apply.

Affordable Wire Management, Exhibit No. EX1019
Case No. IPR2024-00182
Page 141 of 225

Hospital operating rooms utilize most of the preceding techniques because of the extreme hazard of anesthetic agents and the possibility of creating static electricity from nozzles, operators with improper attire, and other causes. The subject of dissipation of static electricity is well covered in NFPA 77. In industrial areas with extremely hazardous conditions, these recommendations should be considered.

3.2.6.8 Proper maintenance

Like other equipment, static control devices are no better than the maintenance they receive. Therefore, it is imperative that regularly scheduled inspections be made to perform the following checks:

a) Determine if all bonding and ground connections are intact.

b) Ascertain the resistance of all the equipment to ground. This may be found by the use of commercially available ohmmeters. A resistance on the order of 1 MΩ is usually satisfactory for static mitigation.

c) Examine static neutralizers to be sure that they are in the correct position, and if of the high-voltage type, that they are energized and the points are clean.

d) Test belts to see if they have maintained their conducting characteristics.

e) Take resistance measurements of conductive flooring and footwear (see 3.2.6.5 and 3.2.6.6).

f) Take instrument readings to determine if static charges are accumulating, either because of the loss of one of the static control devices or because of a change in operating conditions, such as machine speed, the addition of material-handling equipment, or use of new materials that may have different characteristics.

3.2.7 Hazards in various facilities and mechanisms, and applicable static control methods

3.2.7.1 General

A brief description of the particular hazards met within certain facilities and the methods of static control that are applicable are presented in the following paragraphs. A more complete discussion of many of these methods is given in the references that accompany these paragraphs.

3.2.7.2 Aviation industry

Static charges are developed on aircraft both when they are in flight and when on the ground. The physical contact of the aircraft in flight with airborne particles such as dust, smoke, water particles, dry snow, and ice crystals will generate charges, and charged clouds in the proximity will also induce electrification in the aircraft. On the ground, a static charge can build up in the same manner as it does on any other rubber-tired vehicle when in motion or at rest. In addition, the movement of air and airborne particles over the large metallic surface of the aircraft, even though it is at rest, will also generate static, but of less magnitude.

 Copyright © 2007 IEEE. All rights reserved.

Authorized licensed use limited to: COLORADO SCHOOL OF MINES. Downloaded on October 04,2023 at 04:18:37 UTC from IEEE Xplore. Restrictions apply.

Fire and explosions can occur during fueling operations because of static discharges if adequate bonding and grounding are not provided. Detailed recommendations for protecting against the hazard of static sparks during fueling operations are described in NFPA 407, and the methods of providing suitable grounding facilities for static electricity in aircraft hangars are covered in NFPA 409 and NFPA 77.

3.2.7.3 Belted drives

Most power belts and conveyor belts are constructed of insulating materials. These are pressed into contact with pulleys and idlers and generate static electricity at the point where the belt separates from the pulley. The generation of static electricity increases as speed increases or humidity decreases. Static generation will occur with either conducting or nonconducting pulleys. Rubber or leather flat belts running at moderate or high speeds may generate sufficient static electricity to produce sparks. V-belts are not as susceptible to hazardous static generation as are flat belts. Conveyor belts used for the transportation of solid material usually move at low speed, and usually do not produce static electricity. When conveyor belts carrying heated or dry material are operated in a heated atmosphere, or move with high velocity, static generation might be significant. In locations where static charges are a real hazard, considerations should be given to direct or gear drives rather than belted drives. If belted drives must be used, the following methods of static control should be used:

a) *A grounded static collector is installed.* This consists of a grounded piece of angle iron; the width of the belt, with metal spikes welded 25 mm (1 in) apart at the valley of the angle iron. The spikes do not project above the sides of the angle iron. The comb is installed within about 6 mm (1/4 in) of the belt 102 mm to 152 mm (4 in to 6 in) beyond the point where the belt leaves both the driving and the driven pulleys. Such devices may sustain mechanical damage and are seldom used on power equipment. Tinsel bars used to remove static from wide sheet materials can also be used effectively with belts.

b) *A belt of conductive material is used.* These are available from belt manufacturers. A very important consideration in applying conductive rubber belts is to ensure that both the drive and the equipment are well grounded.

c) S*pecial belt dressings are applied.* This makes the inner surface of the belt conducting enough to leak the charges back to the pulley as fast as they are produced. Such dressings must be renewed frequently to be reliable.

d) When material transported by conveyor belts is spilled from the end of a belt into a hopper or chute, it may carry a static charge. The belt support and terminal pulleys should be electrically bonded to the hopper.

e) Metal pulleys are charged with an equal and opposite charge to that carried by the belt, and provisions should be made to transfer this charge to the earth through shaft, bearings, and equipment frame. When equipment frames are conductive, no charge is trapped. When wooden supports are used and are dried out by nearby heat, it is necessary to bond and ground the shaft and bearing to dissipate the trapped charges.

f) Sometimes the flow of static electricity through the oil film has resulted in sufficient roughening or pitting of the bearing surfaces to adversely affect the bearing

Copyright © 2007 IEEE. All rights reserved.

Authorized licensed use limited to: COLORADO SCHOOL OF MINES. Downloaded on October 04,2023 at 04:18:37 UTC from IEEE Xplore. Restrictions apply.

life. In such a case it is necessary to bond the shaft to the bearing housing with some form of sliding metal or carbon brush to provide a low-resistance path between the shaft and the bearing housing. Where a bearing incorporates nylon or other nonconductive bearing material, the shaft should be bonded as previously described.

One manufacturer of belts considers that a belt that shows a 10 MΩ resistance when measured on a 215 mm (8 1/2 in) section will have sufficient static properties to make the belt safe throughout its useful life. Some feel that a much higher resistance will still permit dissipating static satisfactorily. However, it is desirable to keep the resistance as low as possible to provide a good margin of safety.

One method for testing belts is to place two 16 mm (5/8 inch) diameter electrodes on the belt 215 mm (8 1/2 in) apart. The electrodes should be moistened before being placed on the belt, and each should have 20 kN/m^2 (3 lb/in^2) pressure applied. The resistance is then measured by means of a standard 500 V megohmmeter.

3.2.7.4 Coal industry

Many explosions in coal mines and coal preparation plants have been attributed to the accumulation of coal dust and the movement of particles. More than ordinary precautions against the possibility of a static discharge spark, such as good maintenance, proper ventilation, and prevention of dust accumulation, must be taken to avoid such explosions. For a detailed study, refer to NFPA 120 and NFPA 8503.

3.2.7.5 Flour and grain industry

Material movement by means of conveyor belts, elevators, vacuums, blower systems, and other machinery of manufacture can be responsible for charge accumulation and the resulting static discharge. Fine particles of grain dust suspended in the air constitute an excellent explosive. Several explosions of grain elevators due to static sparks have been reported. For detailed information, refer to NFPA 61.

Table 3-3 shows the minimum electrical energy required for the ignition of some dusts when in a cloud or in a layer (see NFPA 77).

 Copyright © 2007 IEEE. All rights reserved.

Authorized licensed use limited to: COLORADO SCHOOL OF MINES. Downloaded on October 04,2023 at 04:18:37 UTC from IEEE Xplore. Restrictions apply.

Table 3-3—Minimum electrical energy for ignition of some dust clouds and layers[a]

Material	Dust cloud (mJ)	Dust layer (mJ)
Alfalfa	320	—
Allyl alcohol resin	20	80.0
Aluminum	10	1.6
Aluminum stearate	10	40.0
Aryl sulfonyl hydrazine	20	160.0
Aspirin	25	160.0
Boron	60	—
Cellucotton	60	—
Cellulose acetate	10	—
Cinnamon	40	—
Coal, bituminous	60	560.0
Cocoa	100	—
Cork	35	—
Cornstarch	30	—
Dimethyl terephthalate	20	—
Dinitro toluamide	15	24.0
Ferromanganese	80	8.0
Gilsonite	25	4.0
Grain	30	—
Hexamethylenetetramine	10	—
Iron	20	7.0
Magnesium	20	0.24
Manganese	80	3.2
Methyl methacrylate	15	—
Nut shell	50	—
Paraformaldehyde	20	—

Copyright © 2007 IEEE. All rights reserved.

Authorized licensed use limited to: COLORADO SCHOOL OF MINES. Downloaded on October 04,2023 at 04:18:37 UTC from IEEE Xplore. Restrictions apply.

Table 3-3—Minimum electrical energy for ignition of some dust clouds and layers[a] *(continued)*

Material	Dust cloud (mJ)	Dust layer (mJ)
Pentaerythritol	10	—
Phenolic resin	10	40.0
Phthalic anhydride	15	—
Pitch	20	6.0
Polyethylene	30	—
Polystyrene	15	—
Rice	40	—
Seed (clover)	40	—
Silicon	80	2.4
Soap	60	3840.0
Soybean	50	40.0
Stearic acid	25	—
Sugar	30	—
Sulfur	15	1.6
Thorium	5	0.004
Titanium	10	0.008
Uranium	45	0.004
Urea resin	80	—
Vanadium	60	8.0
Vinyl resin	10	—
Wheat flour	50	—
Wood flour	20	—
Zinc	100	400.0
Zirconium	5	0.0004

[a]Data from the U.S. Bureau of Mines.

 Copyright © 2007 IEEE. All rights reserved.

Authorized licensed use limited to: COLORADO SCHOOL OF MINES. Downloaded on October 04,2023 at 04:18:37 UTC from IEEE Xplore. Restrictions apply.

Affordable Wire Management, Exhibit No. EX1019
Case No. IPR2024-00182
Page 146 of 225

3.2.7.6 Gas processing

Gases that are not contaminated are unlikely to generate static electricity. Movement of a gas that is contaminated with metallic oxides, scale particles, or liquid particles can produce electrification.

Liquefied petroleum gases behave in the same manner. Compressed air containing particles of condensed water vapor, liquid carbon dioxide, hydrogen gas containing particles of oxide, and steam when discharging from an orifice can each produce static accumulation on the discharge device and the receiving object. This subject is covered in detail in NFPA 50A, NFPA 50B, NFPA 58, NFPA 59, NFPA 59A, and NFPA 77.

3.2.7.7 Paint industry

The use of flammable solvents in paint-mixing operations represents a potential fire and explosion hazard due to ignition by static sparks, which may be generated by the transferal of liquid from open containers by splash filling of tanks, by belt-driven machinery, or by the workers themselves.

3.2.7.8 Paper and printing industries

The movement of the paper itself over the various rolls and the machinery of manufacture tends to cause static voltages.

Where flammable inks and solvents are used in the process, charges thus produced have caused many fires and an occasional explosion. The static charge is also a source of trouble from the production standpoint. Sheets that become charged have an attraction for other objects, which causes difficulty in controlling the sheet, and the web may be torn. Also, the printed image may be damaged by the attraction of dust particles and loose paper fibers to the paper.

3.2.7.9 Refining industry

The fire and explosion hazard due to static ignitions is well known in this industry, and extensive precautions against this hazard are necessary to safeguard lives and property. These are described in detail in API RP 2003.

3.2.7.10 Powder processing

Most powders, when suspended as a dust cloud in air in sufficient concentration, are explosive, and some can be ignited by static sparks. Explosion venting of buildings and the equipment in which the materials are handled or processed may be necessary to minimize the damage if an explosion should occur, despite the usual precautions taken to prevent static accumulations. In the manufacture of explosives, the sensitivity to static ignitions varies with the material being processed. Primary explosives, like fulminate of mercury, can be detonated by a static spark.

Copyright © 2007 IEEE. All rights reserved.

Authorized licensed use limited to: COLORADO SCHOOL OF MINES. Downloaded on October 04,2023 at 04:18:37 UTC from IEEE Xplore. Restrictions apply.

3.2.7.11 Rubber industry

Rubber cement containing a high percentage of naphtha is used in the manufacture of many rubber products. Static charges generated at many points in the process are a frequent source of ignition of the naphtha vapors. The maintenance of a relative humidity of 50% or more, in addition to bonding and grounding the various parts of the processing equipment and the use of static eliminators, is usually needed for adequate control of static electricity. Operators should also avoid the use of rubber-soled shoes to help avoid accumulating a charge on their bodies. Flammable liquids having low flash points should be handled in closed systems or closed containers as much as possible. When transferring flammable liquids from one open conductive container to another, the containers should be bonded together to maintain both at the same voltage and grounded to avoid any possibility of spark.

Rubber-coating machines are particularly susceptible to fires caused by the ignition of flammable vapors due to the discharge of static electricity generated by the movement of fabric over rolls and under spreader knives.

3.2.7.12 Textile industry

The use of automatic cleaning systems for the prompt removal of lint from the atmosphere and from the machinery, in addition to modern air conditioning and precise control of humidity, has greatly reduced the fire hazard from static electricity. An occasional fire in a loom is attributed to static electricity, but grounding the machine frame and bonding all metal parts together and maintaining a relative humidity of 60% or more substantially reduces the hazard.

3.2.7.13 Hospitals

Mixtures of air and certain anesthetics and the use of oxygen and oxygen-enriched atmospheres introduce fire, explosion, and electrical hazards. Areas where easily ignited anesthetic agents such as ethyl ether, cyclopropane, divinyl ether, trifluroethyl ether, and ethylene are present should be thoroughly protected against the possibility of dangerous accumulations of static electricity that may cause ignition. The principal static safeguards in these areas include the following: conducting floors, use of metal or conductive material for all furnishings in direct contact with the floor; conductive shoes for personnel; prohibition of silk, wool, and synthetic garments in these areas unless used as hosiery or undergarments that are entirely in contact with the skin; maintenance of relative humidity at not less than 50%; and grounding of all exposed non-current-carrying metal parts of electrical equipment such as portable lamps, appliances, fixtures, cabinets, and cases, as required by the National Electrical Code® (NEC®) NFPA 70. For more complete coverage of the subject, see Chapter 13 of NFPA 99.

In connection with the grounding of electrical equipment in these areas, more than ordinary care is needed for the maintenance of all electrical systems and equipment, because the electric-shock hazard is greatly increased due to the use of conductive shoes by personnel and the installation of conductive floors.

 Copyright © 2007 IEEE. All rights reserved.

Authorized licensed use limited to: COLORADO SCHOOL OF MINES. Downloaded on October 04,2023 at 04:18:37 UTC from IEEE Xplore. Restrictions apply.

Recent developments indicate that the grounding of non-current-carrying metal enclosures generally required for electrical apparatus used in operating rooms and intensive care units, such as electrocardiographs, oscilloscopes, defibrillators, pacemakers, radios, television sets, vapor generators, and electrical cauterizing equipment, may be increasing the shock hazard to patients and personnel in these areas, due to leakage currents over the grounding conductor. Patients in intensive care units may be dangerously exposed. Transient leakage currents of as little as 20 μA over circuits for monitoring various physiological functions of a patient in an intensive care unit could be fatal where the probes are applied internally. According to some authorities, safety considerations require that circuits be designed so that leakage currents do not exceed 10 μA. For more complete coverage of this subject, see the NEC and IEEE Std 602™ *(IEEE White Book™),* Chapter 6.

3.2.7.14 Dry cleaning

Dry cleaning is defined as the process of removing dirt, grease, paint, and other stains from wearing apparel, textile fabrics, rugs, etc., by the use of nonaqueous liquids (solvents). The various dry-cleaning methods include the following:

a) Immersion and agitation in solvent in closed vessels

b) Brushing or scouring with cleaning solvents

c) Dual-phase processing

Dry-cleaning systems are divided into the following types:

Type I. Systems employing solvents having a flash point below 37.8 °C (100 °F)

Type II. Systems employing solvents having a flash point at or above 37.8 °C (100 °F) and below 60 °C (140 °F)

Type IIIA. Systems employing solvents having a flash point at or above 60 °C (140 °F), and below 93.3 °C (200 °F) and complying with the requirements of NFPA 32, Chapter 3.

Type IIIB. Systems employing solvents having a flash point at or above 93.3 °C (200 °F) and complying with the requirements of NFPA 32, Chapter 3.

Type IV. Systems using solvents that will not support combustion or are nonflammable at ordinary temperatures and only moderately flammable at higher temperatures, and complying with the requirements of NFPA 32, Chapters 4, 5, 6, and 9.

At the present time, the use of Type I systems is prohibited by NFPA 32.

Storage tanks, treatment tanks, purifiers, pumps, piping, washers, extractors, drying tumblers, drying cabinets, combination units, and other similar apparatus should be bonded together. If this equipment is not grounded by virtue of its connection to the electric power service, it should be grounded.

Copyright © 2007 IEEE. All rights reserved.

Authorized licensed use limited to: COLORADO SCHOOL OF MINES. Downloaded on October 04,2023 at 04:18:37 UTC from IEEE Xplore. Restrictions apply.

Special consideration should be given to the control of static electricity in the handling of fabrics. When the fabrics are transferred from one piece of equipment to another they should be bonded together. Humidification of the area will also help to dissipate a static charge.

Personnel working in these areas and performing dry-cleaning operations can accumulate static charges, and the wearing of footwear that may insulate the person from ground should be avoided. Conductive floors, grounded metal worktables, and conductive footwear are helpful in removing such charges. For more details see NFPA 32.

3.2.7.15 Offices

Business machines handling papers and plastic tapes, sheets, or cards often accumulate static charges. These may interfere with the operation of the machine by causing papers to stick together, attracting lint and dust particles, or transmitting minor shocks to the operators. The involuntary reflex action due to such discharges, though otherwise of no hazard, may sometimes result in injury to the personnel. Grounding of all non-current-carrying metal parts of the machine will prevent the accumulation of the charge, but curing the operational difficulties may necessitate the use of humidifiers or static neutralizers, whichever is most practical.

3.2.7.16 Video display terminals and other electronic equipment

See Chapter 5.

3.3 Lightning protection grounding

3.3.1 Nature of lightning

3.3.1.1 General

Lightning is the discharging of high-voltage charged cells (usually negative) within clouds (intra-), to each other (inter-), or to the earth. The cloud-to-ground (CG) flash is the one we are usually concerned with. These charged cells in clouds normally attract charges of opposite polarity on the earth's surface or on high objects located directly below them. When the cell charge reaches a critical level (when the insulation between cloud and earth breaks down), it develops a stepped ionized path, frequently to the earth, resulting in a high current discharge (stroke) that neutralizes, for the moment, these cloud and earth charges. The discharge current increases from zero to a maximum of 1 μs to 10 μs, and then declines to half the peak value of 20 μs to 1000 μs.

Lightning flashes usually consist of a sequence of individual return strokes that transfer significant electrical charge usually from the cloud to earth.

NOTE—The current flow for a negative stroke CG is from the earth back to the cloud.[2]

[2]Notes in text, tables, and figures are given for information only and do not contain requirements needed to implement the standard.

 Copyright © 2007 IEEE. All rights reserved.

Authorized licensed use limited to: COLORADO SCHOOL OF MINES. Downloaded on October 04,2023 at 04:18:37 UTC from IEEE Xplore. Restrictions apply.

The original, rather slowly developing, stroke is followed, on the average, by two to three subsequent strokes, but may contain as few as one and as many as twenty strokes. Each stroke has been found to contain peak currents in the range of 2 kA to 300 kA and has a nominal duration of 20 µs to 50 µs (see Cummins et al.). The first negative stroke was found to have 95% exceed 30 µs with a median value of 75 µs and 5% exceed 200 µs. These subsequent strokes follow the original stroke in times ranging from 20 µs to 100 µs. They are the result of the original charge center in the cloud being recharged by internal flashes from other charge centers in the cloud. The number of strokes in a flash are typically referred to as the *multiplicity*. These subsequent strokes develop much more rapidly than the original stroke, with rates of rise from two to ten times that of the original stroke. Also, it has been found that the rate of rise is not linear, as it has generally been considered to be in the past, but exponential, with the rate increasing rapidly in the last few tenths of a microsecond of rise time. This is important in aspects of lightning protection where the voltage to be guarded against is the product of the rate of current rise (di/dt) and the mutual inductance of a conductor in the magnetic field of a stroke location.

The length of a conductor, thus affected, may exceed 3.21 km (2 mi) The maximum rate of rise of about 7% of subsequent strokes exceeds 100 000 A/µs. These multiple components provide the flickering appearance of lightning strokes. The average peak stroke current is about 40 000 A, although some peak stroke currents are as great as 270 000 A (see Davis).

For most flashes, the subsequent strokes, that is, strokes that occur after the first stroke, will contact the earth at the same stroke point as the first stroke because they travel through the same charged channel that was established by the first stroke. However, nearly one-half of all flashes can contain strokes with different ground stroke points. They can be separated by a few hundred meters to several kilometers (see Cummins et al.).

The point on which the lightning stroke terminates is frequently a point of some elevation, such as a tree, a building, a transmission line and its towers, or similar raised structures. This terminal may be on a metallic structure, which is a good current conductor, or it may be on something that is considered a semiconducting material. These include the following:

a) Trees with the moist cambium layer under the bark
b) Wooden structures with wetted surfaces, moisture residual within the timbers, or internal piping or wiring
c) Masonry structures with wetted surfaces or moisture tracks down the internal surface
d) Concrete structures with reinforcing material, possibly with sections not bonded together

These semiconducting paths are sufficiently conductive to permit the flow of *opposite-polarity* charges upward as the charged cloud cell approaches, but they are inadequate to permit the severe stroke current to flow without extreme heating or mechanical effects. This is due to high resistance in the path of discharge. Probably the most violent result is the explosive vaporization of any moisture, such as in the cambium layer of trees, or a moisture path in masonry buildings. The bark is “exploded” off the tree, and stone and

Copyright © 2007 IEEE. All rights reserved.

Authorized licensed use limited to: COLORADO SCHOOL OF MINES. Downloaded on October 04,2023 at 04:18:37 UTC from IEEE Xplore. Restrictions apply.

bricks are expelled by the steam pressure from the structure. At points where reinforcing elements are not interconnected, rupture of the intervening material results. Wood structural members simply explode from vaporization of the contained moisture. Light metal elements in the stroke path may be distorted by the magnetic stresses of the stroke current.

Reports continue to surface about lightning damaging utility transmission tower foundations. IEEE Std 977™ does not contain any reference to using the rebar for grounding or to connect to the steel tower. The only mention of grounding is a figure showing a butt ground on a pole. This may explain the reports of damage to transmission tower foundations from lightning strokes.

Probably an even greater danger results when flammable materials, such as petroleum or some chemical products, or in particular explosives, are subject to lightning stroke discharges. The temperature at the terminal of the stroke, or at any high-resistance point in the path over which the current flows en route to ground, is likely to ignite these materials.

3.3.1.2 Induced currents

Even when a stroke does not occur at a particular point but is completed to a nearby point on earth or another point within the cloud, the discharge of the cloud cell forces the immediate dissipation of the opposite charges on prominent points on the earth. The return to earth of these previously bound charges, known as an *induced stroke*, may be several hundred amperes in magnitude and can be damaging to sensitive materials, such as flammables and explosives. Low-voltage electrical and instrument devices, too, are subject to damage from this source. Protection from induced strokes is conferred by the same means as for direct strokes.

Lightning can cause damage to structures by direct stroke and to electric equipment by surges entering over exposed power lines (see Walsh). Surges may be the result of direct strokes to the line at some distance away, or they may be magnetically induced voltages. Damage due to direct stroke can be minimized by providing a direct path of low resistance to earth.

3.3.1.3 Need for protection

Damage to structures and equipment due to the surge effect is a subject in itself, and protection against this type of damage is not within the scope of this subclause, except as grounding is involved. Refer to NFPA 780 for means of protection.

It is not possible to positively protect a structure against damage from direct stroke, except by completely enclosing it within a metal enclosure forming a Faraday cage.

It is, however, rare that protection against lightning is really required for all objects or structures at a given site or installation. A number of factors require consideration in determining the extent to which lightning protection should be provided or whether this protection is really needed, as follows:

 Copyright © 2007 IEEE. All rights reserved.

Authorized licensed use limited to: COLORADO SCHOOL OF MINES. Downloaded on October 04,2023 at 04:18:37 UTC from IEEE Xplore. Restrictions apply.

a) Personnel hazards

b) Possible production loss, including overhead and indirect losses

c) Possible damage, and repair cost

d) Effect on insurance premiums

e) Value and nature of structure and its contents

f) Relative location and the topography of the area

g) Thunderstorm frequency [see the isokeraunic map, Figure 3-4, and National Lightning Detection Network® (NLDN®) data, 3.3.1.3.1]

h) Number and severity of lightning strokes per storm (average)

i) Cost of protection

The number of days per year with thunderstorms occurring in a given region is known as the *keraunic level* of that region. The *isokeraunic* map of the U.S. is shown in Figure 3-4. There are, however, local variations, dependent on topography, mineral content, and moisture content, which these maps do not take into account. Also, there are areas where such storms are more intense, and other locations where there are more storms per year, so Figure 3-4 needs to be modified to give consideration to these local variations.

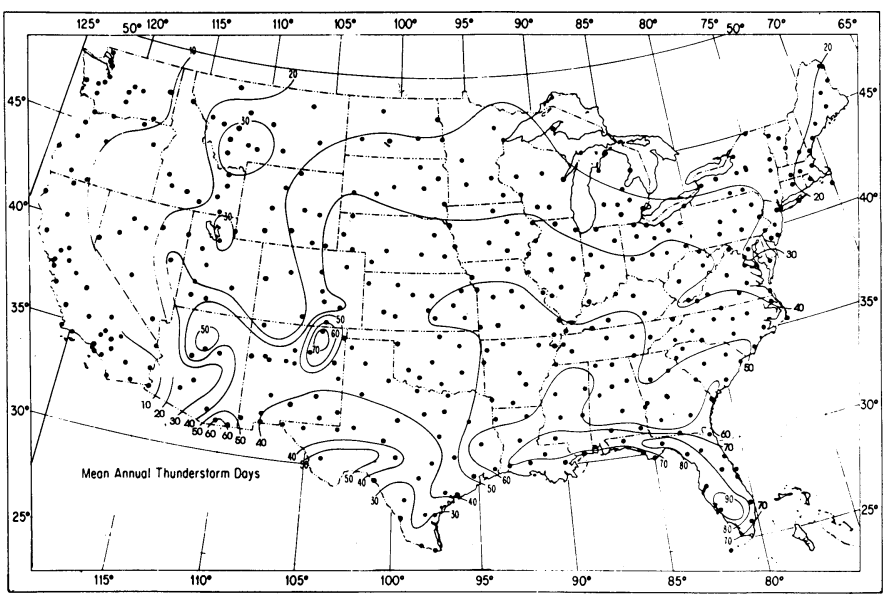

Figure 3-4—Annual isokeraunic map of the continental U.S., showing mean annual number of days with thunderstorms

Copyright © 2007 IEEE. All rights reserved.

Authorized licensed use limited to: COLORADO SCHOOL OF MINES. Downloaded on October 04,2023 at 04:18:37 UTC from IEEE Xplore. Restrictions apply.

Relying on isokeraunic maps to determine lightning stroke frequency introduces some inaccuracies. A "thunderstorm day" is defined as any day during which thunder is heard at the reporting point. No information is included concerning duration or intensity of the storm, its distance or direction from the reporting point, or whether the lightning discharges are inter-cloud, intra-cloud, or cloud-to-ground. Several recent studies (such as De La Rosa and Velazquez; MacGorman, Maier, and Rust; and Orville and Songster) have reported on programs to actually measure the frequency and severity of CG strokes over the U.S. and some other broad geographic areas worldwide. There is enough information now available to use these data to replace traditional isokeraunic maps. They contain more accurate lightning-stroke density data than is presently available from the (thunder) isokeraunic maps.[3] A map depicting lightning strike density can be found in MacGorman, Maier, and Rust.

3.3.1.3.1 National Lightning Detection Network

Starting in 1989 an objective means of measuring lightning was initiated. The NLDN is a configuration of remote field sensors that are employed to detect radiated electromagnetic signals from lightning discharges. The Electric Power Research Institute (EPRI) formed the network in a joint venture with Global Atmospherics, Inc. (GAI), presently owned by Vaisala, Inc. This Arizona based company continues to operate the NLDN. Most importantly, lightning data is now recorded in real time via a satellite connection to each of the 106 U.S. sites. The expected flash detection efficiency ranges between 80% to 90%, varying slightly by region. Validation of performance has been reviewed based on multi-camera video studies of storms in New York and on rocket-triggered lightning measurements in Florida. Interested parties are able to access lightning information (archive or real time) from GAI.

The information available gives users the ability to verify lightning activity for precautionary actions (back-up generators, safety) or forensic/diagnostic applications. Lightning parameters available include the following;

a) Latitude/longitude of individual lightning ground contact points

b) Greenwich Mean Time and date

c) Peak amplitude of event

d) Polarity of discharge

e) Multiplicity (including the peak amplitude and contact point for each separate stroke of a flash for lightning activity January 1, 1995, forward)

Standard and custom designed products are available to reflect average annual lightning densities for use in protection and design applications. The ambiguities of thunderstorms days have been replaced by statistically valid 7 year averages, and are available for domains as small as 48.3 km × 48.3 km (30 mi × 30 mi) for site specific investigations. Root mean squared accuracies of 500 m (1639 ft) should be anticipated, with individual quality and precision parameters provided for each stroke as necessary.

[3] This information is available from https://thunderstorm.vaisala.com/.

 Copyright © 2007 IEEE. All rights reserved.

Authorized licensed use limited to: COLORADO SCHOOL OF MINES. Downloaded on October 04,2023 at 04:18:37 UTC from IEEE Xplore. Restrictions apply.

The highest frequency is encountered in south-central Florida. Since 1894, the recording of thunderstorms has been defined as the local calendar days during which thunder was heard. A day with thunderstorms is so recorded, regardless of the number occurring on that day. The occurrence of lightning without thunder is not recorded as a thunderstorm.

Appendix L of NFPA 780 contains a *risk assessment guide* that provides guidelines on the need for lightning protection.

3.3.2 Equipment and structures to be considered

Equipment and structures can be separated into five classifications for their need of lightning protection.

a) The first class needs very little or no additional protection. The only real requirements for these are that they be effectively connected to a suitable grounding electrode. This class includes:
   1) All metal structures except tanks or other enclosures of flammable materials
   2) Water tanks, silos, and similar structures, constructed largely of metal
   3) Flagpoles made of conductive material

b) The second class consists of buildings with conducting surfaces and nonconducting framework, such as metal-roofed and metal-clad buildings. This type may require the addition of down conductors to connect the exterior roof and cladding to suitable grounding terminal.

c) The third class consists of metal-framed buildings with nonconducting facings. These may need the addition of conducting air terminals suitably located, connected to the frame, and projecting beyond and above the facing to act as the lightning terminal points, eliminating puncture of the facing.

d) The fourth class consists of nonmetallic structures, either framing or facing. These may require extensive protection treatment. Included are:
   1) Buildings of wood, stone, brick, tile, or other nonconducting materials, without metal reinforcing members.
   2) High stacks and chimneys. Even with reinforcing members, these should have full lightning-protection treatment of air terminals, down conductors, and grounding electrodes.

e) A fifth class consists of items of high risk or loss consequences, which normally receive full lightning-protection treatment, including air terminals or diverters, down conductors, and grounding electrodes (see 3.3.3.2). These include:
   1) Buildings of great aesthetic, historical, or intrinsic value
   2) Buildings containing readily combustible or explosive materials
   3) Structures containing substances that would be dangerous if released by the effects of a lightning stroke
   4) Tanks and tank farms
   5) Sewage treatment plants and water pumping stations
   6) Transmission lines
   7) Power stations and substations

Copyright © 2007 IEEE. All rights reserved.

Authorized licensed use limited to: COLORADO SCHOOL OF MINES. Downloaded on October 04,2023 at 04:18:37 UTC from IEEE Xplore. Restrictions apply.

Affordable Wire Management, Exhibit No. EX1019
Case No. IPR2024-00182
Page 155 of 225

Public service facilities that provide extremely important functions, such as pumping stations, and police and fire stations, must be considered for lightning protection.

3.3.3 Requirements for good protection

3.3.3.1 Protection principles

Lightning cannot be prevented; it can only be intercepted or diverted to a path that will, if well designed and constructed, minimize or avoid damage. Even this means provides only 99.5% to 99.9% protection. Complete protection can be provided only by enclosing the object in a complete metal (or metal mesh) encapsulation. For example, a person in a metal-topped, metal enclosed automobile is insulated in the case of a lightning stroke. Still, a 99.5% protection level will reduce the incidence of direct strokes from one stroke per 30 years [normal in the keraunic level of 30 for a 30 m (100 ft) square, 9 m (30 ft) high structure] to one stroke per 6000 years, while 99.9% protection will reduce the incidence to one stroke per 30 000 years. Protection at 99.5% is the practical choice. The fundamental theory of lightning protection of structures is to provide means by which a discharge may enter or leave the earth without passing through paths of high resistance. Such a condition is usually met by grounded steel-frame structures. A study from England revealed metal structured buildings with columns on a 7 m (25 ft) spacing perform similar to that of a Faraday cage and offered lightning protection to the interior.

Suitable protection for other structures is nearly always provided by the installation of air terminals, down conductors, and ground terminals.

In the case of metal-frame buildings, the multiplicity of closed conducting loops within the structure will act to resist the transmission of surge voltages into the interior of the building. A direct lightning stroke to an upper level of such a metal building would lead to a surface curtain of surge-current flow traveling downward toward the ground on the outer ring of vertical conducting columns of the building. Any tendency for a surge current to flow toward the building center is at once blocked by an induced current around the closed metal conducting frame. The inductive voltage drop associated with this vertical surface shell of surge current is associated with a magnetic field encircling the entire building structure. Such a magnetic field encircles every other vertical conducting member within the building and induces an equal voltage between the top and bottom of each column. Thus, there is minimal tendency for any one vertical conducting path up through the building to display a voltage difference to any other internal vertical path. Even though a lightning stroke has caused the top deck of the building to go 250 kV aboveground, almost none of this voltage appears as a *difference* voltage between different conducting paths at the top deck of the building.

Lightning exposure external to a metal-frame structure, including direct hits to the structure, presents almost no surge-voltage protection problem to electric power circuits and electric power equipment contained entirely within the *shell* of the structure. (Electronic equipment, such as computers, may require a higher level of protection. See Chapter 5 for recommendations for the protection of electronic equipment.)

 Copyright © 2007 IEEE. All rights reserved.

Authorized licensed use limited to: COLORADO SCHOOL OF MINES. Downloaded on October 04,2023 at 04:18:37 UTC from IEEE Xplore. Restrictions apply.

The protection of electrical equipment and overhead distribution lines from the effects of lightning is not within the scope of this subclause. The modern techniques used for line protection, however, are very similar to the principles of protection for buildings, tanks, and nonelectrical objects.

3.3.3.2 Zone of protection

For many years, criteria used to determine the lightning-protection zone depended on the principle of a linear-sided *cone* of protection from high masts or overhead wires. The angle of protection surface from the horizontal varied from 45° for important structures to 30° for those of lesser importance. These angles were to be used without regard to the height aboveground. These criteria were found to be inadequate, particularly for objects more than 23 m (75 ft) high. Actually, very tall objects, such as radio and television towers and very tall buildings, were found to be struck below their tops by stroke paths coming from the side, although the top of the structure was properly protected against the lightning.

In place of the linear-sided cone of protection, a curved-sided zone of protection has been found applicable. This concept, first developed by Lee (see "Protection Zone for Buildings Against Lightning Strokes" and "Lightning Protection of Buildings"), has been adopted in recent editions of NFPA 780. The zone of protection is defined by a sphere with a radius of 45 m (150 ft), tangent to the earth or nearby grounded objects and touching a protecting grounded (overhead) member or a lightning protection air terminal. Rotating this sphere horizontally through 360° defines a surface, and the area below this surface is the zone of protection. This concept is known as the *rolling ball*. The surface of a zone of protection is also formed when such a sphere is resting on two or more air terminals. Objects within this zone have protection from 99.5% of direct strokes. It is necessary to analyze the zone of protection for all directions around a structure to be protected, not just one side. Corners particularly require protection, since these have been found to be frequent targets for lightning stroke termination. See NFPA 780; Lee, "Protection Zone for Buildings Against Lightning Strokes" and "Lightning Protection of Buildings"; and Offermann for further information.

Computer programs have been developed that can determine the effectiveness of the rolling ball concept of the zone of protection. Detail studies have shown that there are areas and buildings configurations where the rolling ball concept does not protect.

3.3.3.3 Lightning protection methods

There are several methods of lightning protection, as follows:

a) Franklin air terminal
b) Faraday cage
c) Early emission (ionizing) streamer
d) Eliminator, deterrent, spear ball
e) Rocket
f) Laser

Copyright © 2007 IEEE. All rights reserved.

Authorized licensed use limited to: COLORADO SCHOOL OF MINES. Downloaded on October 04,2023 at 04:18:37 UTC from IEEE Xplore. Restrictions apply.

Affordable Wire Management, Exhibit No. EX1019
Case No. IPR2024-00182
Page 157 of 225

3.3.3.3.1 Franklin air terminals and Faraday cage

With Franklin air terminals, and the connecting cross conductors and the down conductors, a Faraday cage exists. The Franklin air terminal and the Faraday cage are combined to form a complete system, referred to by several terms: air terminal system, Faraday cage and/or the Franklin method or the *fortress concept.* Steel framed structures, adequately grounded, meet the preceding requirements with the addition of air terminals. The air terminals are spaced 6 m (20 ft) to 7.5 m (25 ft) apart on the edge of the structure and 15 m (50 ft) on the interior of the roof. Cross connections are made at 45 m (150 ft). Without a steel framework, down conductors must provide at least two paths to earth for a lightning stroke to any air terminal (see NFPA 59A).

3.3.3.3.2 Early emission ionizing streamer

The inspiration for the ionization lightning conductor came from a paper read in the Academy of Sciences in Paris in 1914. A patent was issued in 1931. In 1953, Alphonse Capart improved this device. Early emission ionizing streamer lightning protection devices are considered dynamic devices compared to the Franklin cone or the Faraday cage. Radioactive sources are used to obtain ionization of the air around the tip of the air terminal. The theory states that the radioactive ionization terminal produces a rising air stream. This column acts as an extended air terminal reducing the "tension" or if the potential is sufficient, a conductive streamer is provided (see NFPA 780). The effect is a tall Franklin air terminal with a large zone of protection. Two down conductors are required for each ionizing "mast."

The design presently relies upon shape of the terminal and has eliminated the ionization component. The system has not been universally accepted by the scientific community. Although controversial, the system is being sold through out the world, especially in France.

3.3.3.3.3 Charge transfer system

This controversial method has been in existence for over 35 years. The National Fire Protection Association (NFPA) Standards Council at their meeting in June/July 1988 (Action 88-39) denied acceptance of this method based on lack of technical justification and the lack of specific Code language.

The theory of operation has been consolidated and an orderly, logical, and consistent relation has been developed. The dissipation array, with its multitude of sharp points, produces a delay in the development of the upward leader. The charged cloud reduces the field potential in the area. Should a lightning stroke's step leader approach, the delay of the upward streamer inhibits contact with the downward leader forcing the downward leader to attach itself to some other upward streamer that has progressed upward earlier. The system depends on an extensive network of earthing, i.e., ground connections, to assure a low-impedance connection to earth. This low impedance and ground coverage allows this charge to the earth to flow unimpeded.

 Copyright © 2007 IEEE. All rights reserved.

Authorized licensed use limited to: COLORADO SCHOOL OF MINES. Downloaded on October 04,2023 at 04:18:37 UTC from IEEE Xplore. Restrictions apply.

The claims of the vendor have not been universally accepted by the scientific community. The Scientific Committee of the International Conference on Lightning Protection (ICLP), which represents the collective position of independent lightning scientists, has rejected this method of lightning protection.

3.3.3.3.4 Rocket

Rockets have been and are being used to discharge, under controlled conditions, charged thunderclouds. The firing of a rocket with a short trailing conductor can result in the charge within the cloud being discharged. Usually the lower portion of a cloud is negatively charged with the upper portion of the cloud positively charged. With a trailing conductor, the charge can be directed to an object. Testing of explosive storage buildings, using this method, showed the reinforcing bars and the concrete dissipated the majority of lightning stroke instead of the driven ground rods and ground loop.

3.3.3.3.5 Laser

Like rockets, lasers are under development to discharge thunderclouds. This theoretical method is still in its infancy and no practical installations exist at this time.

3.3.3.4 Practices for direct protection

Fundamentally, direct lightning protection (lightning-protection systems) consists of placing air terminals or diverter elements suitably at the top of the structure to be protected, and connecting them by adequate down conductors to grounding electrodes (earth). An air terminal, as defined in NFPA 780, is “a stroke termination device that is a receptor for attachment of flashes to the lightning protection system and is listed for that purpose.” A necessary principle is that the adequate down conductor should not include any high-resistance or high-reactance portions or connections and should present the least possible impedance to earth. There should be no sharp bends or loops. Steel-framed structures, adequately grounded, meet these requirements with only the provision for terminating the stroke on a metallic air terminal, connected to the frame structure, to avoid the possibility of puncturing any roofing or siding to reach the frame. In the absence of a steel framework, a down conductor providing at least two paths to earth for a stroke to any air terminal is generally adequate. The contact surfaces at the joints of structural steel buildings, which rely on the building steel for the path to ground, should not be painted with an electrically nonconducting paint. Where nonconductive paints are used, the joints should be jumpered or separate down conductors should be installed.

Air terminals attached to the structure itself are pointed solid rods or pipes, at least 0.25 m (10 in) long to possibly 6 m (20 ft) long. Unpublished studies by Professor Charles B. Moore, New Mexico Institute of Mining and Technicality, presented to the NFPA’s Technical Committee on Lightning Protection, have revealed a rounded, instead of a pointed, air terminal has a greater degree of attracting lightning than a sharp pointed rod. His report and presentation resulted in the NFPA changing NFPA 780-2000, Figure 4.6.3.2, to “Air terminal tip configurations can be sharp or blunt.”

Copyright © 2007 IEEE. All rights reserved.

Authorized licensed use limited to: COLORADO SCHOOL OF MINES. Downloaded on October 04,2023 at 04:18:37 UTC from IEEE Xplore. Restrictions apply.

These air terminals are separated by distances determined through use of the *critical radius* described in Lee, "Protection Zone for Buildings Against Lightning Strokes" and "Lightning Protection of Buildings," and Offermann so that the structure's surface will not protrude through or beyond the surface of protection.

NFPA 780 gives detailed instructions for the placement and spacing of air terminals on roofs of buildings of various configurations and on structures other than roofed buildings. In general, on the perimeter of a building with a flat or gently sloping roof, 0.25 m (10 in) terminals should not be separated more than 6 m (20 ft), and 0.6 m (2 ft) terminals should not be separated more than 7.5 m (25 ft). On roof areas within the perimeter, spacing of 15 m (50 ft) will suffice. This code also requires air terminals to be secured against overturning, and it requires air terminals over 0.6 m (24 in) to be supported at a point not less than one half its height. Since NFPA 780 has been adopted by ordinance in many jurisdictions, it should be consulted for detailed requirements by any engineer designing a lightning-protection system.

All air terminals should be connected by down conductors and should form a two-way path from each air terminal to make connection to the grounding electrode (voltages double at an open circuit or end, in a lightning down conductor). Bend radii should be as long as possible, not less than 20 cm (8 in), since sharp bends increase the reactance of the conductor. Reactance is much more important than resistance because of the very high frequency of the surge front. At least two down conductors should be provided on all structures, except that only one down conductor is needed for masts, spires, and flagpoles.

The location of down conductors will depend on the location of the air terminals, the size of the structure being protected, the most direct routing, the security against damage or displacement, the location of metallic bodies, water pipes, the grounding terminals, and the ground conditions (earth or soil). If the structure has electrically continuous metallic columns, these columns will act as down conductors. The air terminals must be interconnected by conductors to make connection with the columns. However, internal column footings of large buildings dry up and can become ineffective since they seldom are exposed to ground water.

The average distance between down conductors should not exceed 30 m (100 ft). Irregularly shaped structures may require extra down conductors. Down conductors passing through runways, driveways, playgrounds, public walks, etc., should be guarded to prevent their damage or displacement. If a down conductor is run through ferrous metal tube or pipe, the conductor must be bonded at both ends of the tube or pipe.

Every down conductor must be connected, at its base, to an earthing or grounding electrode. This electrode can be concrete encased. If a ground rod is used, it should be placed away from the base of the building a distance equal to the depth of the rod for maximum effectiveness. The ground rod should be placed in undisturbed or firmly packed soil and if possible extend below the foundation of the building. The length of the grounding conductor is highly important. A horizontal run of, say, 15 m (50 ft) to a better electrode (such as a water pipe) is much less effective than a connection to a driven rod alongside the structure itself. Ground terminals should make contact with the earth from the surface downward to avoid flashing at the surface. Earth connections should be made

 Copyright © 2007 IEEE. All rights reserved.

Authorized licensed use limited to: COLORADO SCHOOL OF MINES. Downloaded on October 04,2023 at 04:18:37 UTC from IEEE Xplore. Restrictions apply.

at uniform intervals about the structure, avoiding as much as possible the grouping of connections on one side. Properly made connections to earth are an essential feature of a lightning termination system for the protection of buildings (see Chapter 4).

Naturally, the greater the number of down conductors and grounding electrodes, the lower will be the voltage developed within the protection system, and the better it will perform. This is one of the great advantages of the steel-framed building. It has as many down conductors as it has columns. Also, at the bottom of each column it has a footing, which is a very effective electrode if reinforcing bar is used and connected to the column (see Chapter 4).

To improve the connection to earth and to reduce the resistance to earth, two or more ground rods are suggested. The distance between the two rods must be the depth of the first rod plus the depth of the second rod. Numerous books and articles show the distance between the two rods at 3 m (10 ft), which is not sufficient.

Interior metal parts of a non-metal-framed building that are near a down conductor may need to be connected to that down conductor. Otherwise, they may sustain side flashes from it; these occur because of a voltage drop in the lower portion of that down conductor and ground terminal. NFPA 780 includes formulas for determining whether this bonding is required.

Incorrect interpretations of the NEC suggest that interior metal parts of a building that are within 1.8 m (6 ft) of a down conductor are required to be connected to that down conductor. This interpretation has led to connections being made through a roof to electrical fixtures below. As long as the interior electrical grounding system is installed as prescribed by the NEC and is connected to the lightning stroke discharge protection system at some point, there have been no reports of problems with side flashes, when the formula in NFPA 780 is utilized.

The same is true for the juxtaposition of interior metal parts and exterior metal roofing or sheathing. Exterior emergency ladders should also be bonded to the nearest down conductor. On a flattop building protected by air terminals, all metallic parts and equipment projecting higher than the air terminals, such as air-conditioning and heating equipment, should be bonded to the lightning terminal protection system. Metal roofs less than 5 mm (3/16 in) thick should have an air terminal mounted on top.

For high-rise buildings and towers, an equalizing horizontal bonding loop should be installed at approximately every 18 m (60 ft). This bonding loop should be connected at every down conductor to equalize the voltage differences between down conductors. If this is not done, during severe lightning strokes, a voltage will appear between down conductors as the surge impedance of each down conductor is different, causing high-voltage gradients between these down conductors. These equalizing loops become more important if the structure area is small since in this case there are fewer down conductors to carry the total stroke current.

Very tall structures, such as those exceeding 305 m (1000 ft), should be equipped with horizontal exterior air terminals bonded to the down conductors and the horizontal

Copyright © 2007 IEEE. All rights reserved.

Authorized licensed use limited to: COLORADO SCHOOL OF MINES. Downloaded on October 04,2023 at 04:18:37 UTC from IEEE Xplore. Restrictions apply.

Affordable Wire Management, Exhibit No. EX1019
Case No. IPR2024-00182
Page 161 of 225

bonding loops. At elevations below 457 m (1500 ft), the horizontal air terminals should be spaced no further apart than 36 m (120 ft) vertically, or at every other horizontal bonding loop. Above 457 m (1500 ft), the horizontal air terminals should be installed every 18 m (60 ft) vertically or at every horizontal bonding loop. These terminals are needed because of two natural attributes of lightning. First, it is possible for an electrified cloud to exist at an altitude as low as 457 m (1500 ft), so that the top of a tall structure may be in the cloud. Second, a lightning stroke develops as a rapid series of short segments, not as a single continuous breakdown. The direction of any single segment is somewhat unpredictable. It is therefore possible for a stroke to pass the top of a tall structure, then stroke sideways to some part of the structure below the top. The horizontal air terminals provide protection to metallic items, such as window frames, that might otherwise be the terminating point of lightning strokes from either of these two sources.

3.3.4 Practices for lightning protection

3.3.4.1 General

Buildings and structures involving hazardous liquids, gases, or explosives require additional protection. In these, it is highly desirable to keep the stroke current away from the structure, not even utilizing its metal skin or framework as a down conductor. For such cases, including tanks, tank farms, and explosive manufacture and storage, a separate diverter protection system is employed.

The diverter element consists of one or more masts, or one or more elevated wires (between masts or poles), meeting the requirements of lightning protection (see NFPA 780). For structures containing flammable liquids and gases, the radius of the sphere of protection is reduced to 30 m (100 ft), instead of the 45 m (150 ft) dimension normally used. To prevent sideflashes, the minimum distance between a mast or overhead ground wire and the structure to be protected should not be less than the sideflash distance as described in NFPA 780. (See Figure 3-5.) Metal masts may act as grounding conductors. Wood poles should have an air terminal securely mounted to the top of the pole, and a copper or copperweld conductor along the pole should be provided as a grounding conductor. The guy wires for an elevated wire span can be designed to serve as grounding conductors. As with all other types of grounding conductors, suitable earthing electrodes are necessary.

 Copyright © 2007 IEEE. All rights reserved.

Authorized licensed use limited to: COLORADO SCHOOL OF MINES. Downloaded on October 04,2023 at 04:18:37 UTC from IEEE Xplore. Restrictions apply.

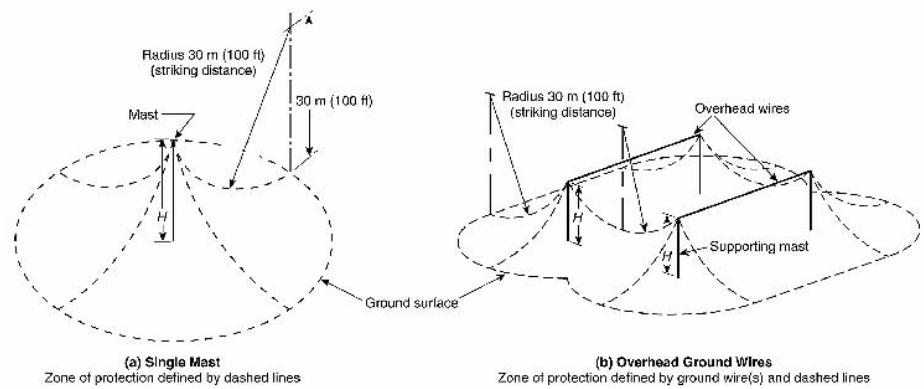

Reprinted with permission from NFPA 780-2004, *Installation of Lightning Protection Systems,* copyright © 2004, NFPA. This reprinted material is not the complete and official position of the NFPA on the referenced subject, which is represented only by the standard in its entirety.

Figure 3-5—Lightning protection for structures containing hazardous materials

3.3.4.2 Tanks and tank farms

In some places it is not considered necessary to protect tanks containing flammable liquids or gases from lightning, provided that the base of the tanks are adequately grounded. Direct strokes are permitted to the tank top or walls, and as long as the steel is 5 mm (3/16 in) or more in thickness, there is little danger of a stroke puncturing it. Steel tanks with steel roofs and floating metal roofs are generally considered to be self-protecting. Tanks with nonmetallic roofs are not self-protecting and should usually be protected with air terminals, conducting masts, or elevated ground wires. In all cases, joints and piping connections should be electrically continuous, and all vapor or gas openings closed or flameproof. The possibility of a direct stroke to the vicinity of a vent or leak is taken care of by an air terminal of suitable length (see Lee, “Protection Zone for Buildings Against Lightning Strokes” and “Lightning Protection of Buildings,” and Offermann).

3.3.4.3 Nonconducting heavy-duty stacks

For heavy-duty stacks, including those in petroleum and chemical plants, air terminals connected to a loop conductor around the top of the stack, and at least two down conductors to grounding electrodes at the base of the stack are required. (See Figure 3-6.)

Copyright © 2007 IEEE. All rights reserved.

Authorized licensed use limited to: COLORADO SCHOOL OF MINES. Downloaded on October 04,2023 at 04:18:37 UTC from IEEE Xplore. Restrictions apply.

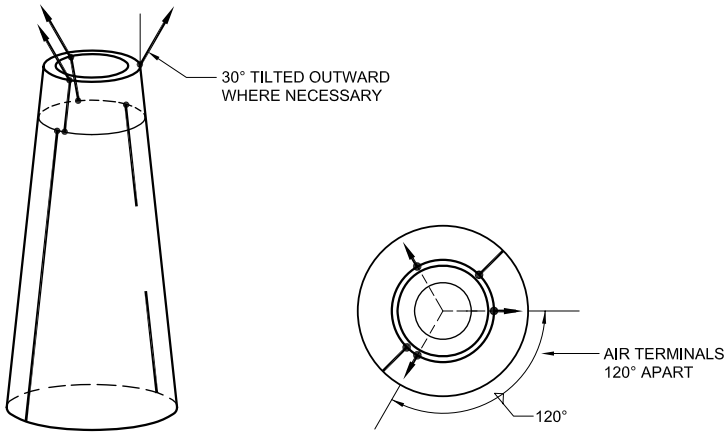

Figure 3-6—Lightning protection for stacks

Air terminals should be made of solid copper or stainless steel and should be uniformly distributed around the top of cylindrical stacks at intervals not exceeding 2.4 m (8 ft). On square or rectangular stacks, air terminals should be located not more than 0.6 m (2 ft) from the corners and should be spaced not more than 2.4 m (8 ft) apart around the perimeter. Where the stack gas is nonflammable, the length of the terminals may be as little as 0.46 m (18 in). Where ventilating stacks emit explosive gas or dust, the length of the air terminals should be not less than 1.5 m (5 ft). Where the gas or dust is explosive and under forced draft, the length should be not less than 4.5 m (15 ft). In the latter case, tilting the terminals outward at 30° from the vertical is desirable.

Where the effluent is corrosive, as in flue gas, 1.6 mm (1/16 in) thick lead coating on the air terminals is required. The loop is also kept below the top of the stack.

3.3.4.4 Steeples

Steeples are similar to stacks except that they normally are sharp peaked and thus require only one air terminal. This should project far enough above the top ornamentation to meet the requirements of lightning protection. Otherwise, multiple air terminals or a multipointed terminal should be used to provide equivalent protection.

Steeples are frequently framed with wood, not metal, so adequate down conductors are a basic requirement.

3.3.4.5 High masts

Equipment on the sides of very high masts, such as television or FM antennas, can be protected from direct stroke damage by the addition of lateral spikes or *thorns* projecting outward from the sides of the mast. At heights above the critical radius of 45 m (150 ft),

 Copyright © 2007 IEEE. All rights reserved.

Authorized licensed use limited to: COLORADO SCHOOL OF MINES. Downloaded on October 04,2023 at 04:18:37 UTC from IEEE Xplore. Restrictions apply.

spikes in a horizontal or near-horizontal position, suitably spaced as described in Lee, "Protection Zone for Buildings Against Lightning Strokes" and "Lightning Protection of Buildings," and Offermann, will cause strokes coming from the side to terminate on the spikes rather than on the mast itself. This will greatly reduce the possibility of damage to electrically fragile components by the termination of the lightning stroke arc. The number of spikes around the mast (three, four, five, or six), the length of the spikes, and their vertical spacing along the mast need to be determined for optimum economics, following the principles of lightning protection. Where masts are installed on top of a building, the bottom of the mast structure must be bonded at least at two points with the building grounding network.

3.3.4.6 Power stations and substations

Power stations and substations require protection from direct strokes, obtainable using the circular-sided protection zone guidance set forth in IEEE Std 998™; IEEE Std 1243™; Lee, "Protection Zone for Buildings Against Lightning Strokes" and "Lightning Protection of Buildings"; *Lightning;* Offermann. Masts or overhead wires, or both, may be used. The grounding of these to the grounding network of the station or substation is necessary.

Protection of the attached overhead lines by means of an overhead grounded conductor or diverter (static wire) for 610 m (2000 ft) away from the station or substation is recommended. This will preclude direct strokes on this section of the line and will reduce the duty on the station surge arresters. The spacing of this overhead grounded conductor or diverter and its down conductors from the phase conductors must not be less than the basic impulse insulation level of the lightning-protection system. Otherwise, sideflashes to the phase conductors will occur, causing unnecessary outages. Generally, unless the lines are 66 kV or higher, it is not practical to install these overhead grounded conductors above them.

However, overhead grounded conductors may be desirable on some power lines below 66 kV, depending on past experience with such lines operating in high keraunic areas. To attain the desired protection, separation of phase conductors from one another and from the grounding down conductors must be raised to levels similar to those applicable to 66 kV and higher voltage systems. This frequently assumes positioning of the phase conductors on standoff insulators on one side of the pole, with the grounding down conductor offset on fiberglass standoff members on the opposite side of the pole. In this way, separations of about 1.5 m (5 ft) are readily available.

Lightning protection of power stations and substations includes the protection of station equipment by means of surge arresters (see Walsh). These arresters should be mounted on, or closely connected to, the frames of the principal equipment that they are protecting, especially transformers. They may also be mounted on the steel framework of the station or substation where all components are closely interconnected by means of the grounding grid. For satisfactory lightning protection, substation grounding network resistance must not exceed 5 ohm; for large stations, lower values are desirable.

Copyright © 2007 IEEE. All rights reserved.

Authorized licensed use limited to: COLORADO SCHOOL OF MINES. Downloaded on October 04,2023 at 04:18:37 UTC from IEEE Xplore. Restrictions apply.

The surge-arrester grounding conductor should be connected into the common station ground bus. As with lightning down conductors, the grounding conductor for surge arresters must be as short and straight as possible. The NEC requires that it be not less than 16 mm^2 (6 AWG) for circuits of 1 kV and over, but larger sizes may be desirable to resist possible mechanical damage, corrosion, etc.

3.4 Normative references

The following referenced documents are indispensable for the application of this document (i.e., they must be understood and used, so each referenced document is cited in the text and its relationship to this document is explained). For dated references, only the edition cited applies. For undated references, the latest edition of the referenced document (including any amendments or corrigenda) applies.

API RP 2003, Protection Against Ignitions Arising Out of Static, Lightning, and Stray Currents.[4]

Beach, R., *Electrostatic Hazards and Their Control.*

Beach, R., "Grounding Principles and Practice—V: Static Electricity in Industry," *Electrical Engineering*, vol. 64, May 1945, pp. 184–194.

Beach, R., "Industrial Fires and Explosions from Electrostatic Origin," *Mechanical Engineering,* April 1953.

Berger, K., Anderson, R. B., and Kroninger, H., "Parameters of Lightning Flashes," *Electra,* vol. 40, pp. 101–119, 1975.

Cummins, K. E., et al. "NLDN '95: A Combined TOA/MDF Technology Upgrade of the U.S. National Lightning Detection Network," *International Aerospace & Ground Conference on Lightning and Static Electricity,* Williamsburg, VA, USA, September 26–28, 1995.

Davis, N. H., "Lightning Protection Systems," *NFPA Fire Protection Handbook,* 15th ed., Chapter 12.

De La Rosa, F., and Velazquez, R., "Review of Ground Flash Density Measuring Devices Regarding Power System Applications," *IEEE Transactions on Power Delivery,* vol. PRWD-4, no. 2, April 1989.

Eichel, F. G., "Electrostatics," *Chemical Engineering,* March 13, 1967.

Gally, S. K., "Elements of Static Electricity," *Gas,* March 1949, pp. 42–46.

[4]API historical materials can be obtained (for a fee) from the American Petroleum Institute Library, 1200 L Street NW, Washington, DC 20005, USA (http://www.api.org/).

 Copyright © 2007 IEEE. All rights reserved.

Authorized licensed use limited to: COLORADO SCHOOL OF MINES. Downloaded on October 04,2023 at 04:18:37 UTC from IEEE Xplore. Restrictions apply.

Harper, W. R., *Contact and Frictional Electrification.* New York: Oxford University Press, 1967.

IEC 60664-5, Insulation Coordination for Equipment Within Low-Voltage Systems—Part 5: Comprehensive Method for Determining Clearances and Creepage Distances Equal to or Less than 2 mm.[5]

IEEE Std 602, IEEE Recommended Practice for Electric Systems in Health Care Facilities (*IEEE White Book*).[6, 7]

IEEE Std 977, IEEE Guide to Installation of Foundations for Transmission Line Structures.

IEEE Std 998, IEEE Guide for Direct Lightning Stroke Shielding of Substations.

IEEE Std 1243, IEEE Guide for Improving the Lightning Performance of Transmission Lines.

Klinkenberg, A., and Van Der Minne, J. L., *Electrostatics in the Petroleum Industry.* New York: Elsevier Publishing Company, 1958.

Lee, R. H., "Protection Zone for Buildings Against Lightning Strokes Using Transmission Line Protection Practice," *IEEE Transactions on Industry Applications,* vol. IA-14, November/December 1978.

Lee, R. H., "Lightning Protection of Buildings," *IEEE Transaction on Industry Applications,* vol. IA-15, May/June 1979.

Lightning, Volume 1 & 2: Physics of Lightning, R. H. Golde, ed. London: Academic Press, 1977.

Loeb, L. B., "The Basic Mechanisms of Static Electrification," *Science,* December 7, 1945, pp. 573–576.

MacGorman, D. R., Maier, M. W., and Rust, W. D., *Lightning Strike Density for Contiguous United States from Thunderstorm Duration Records.* NUREG Report CR-3759. Washington, DC: U.S. Government Printing Office, 1984.

NFPA 32, Standard for Drycleaning Plants.[8]

[5]IEC publications are available from the Sales Department of the International Electrotechnical Commission, Case Postale 131, 3, rue de Varembé, CH-1211, Genève 20, Switzerland/Suisse (http://www.iec.ch/). IEC publications are also available in the United States from the Sales Department, American National Standards Institute, 11 West 42nd Street, 13th Floor, New York, NY 10036, USA.

[6]IEEE publications are available from the Institute of Electrical and Electronics Engineers, 445 Hoes Lane, P.O. Box 1331, Piscataway, NJ 08855-1331, USA (http://standards.ieee.org/).

[7]The IEEE standards or products referred to in this clause are trademarks of the Institute of Electrical and Electronics Engineers, Inc.

Copyright © 2007 IEEE. All rights reserved.

Authorized licensed use limited to: COLORADO SCHOOL OF MINES. Downloaded on October 04,2023 at 04:18:37 UTC from IEEE Xplore. Restrictions apply.

NFPA 50A, Standard for Gaseous Hydrogen Systems at Consumer Sites.

NFPA 50B, Standard for Liquefied Hydrogen Systems at Consumer Sites.

NFPA 58, Liquefied Petroleum Gas Code.

NFPA 59, Utility LP-Gas Plant Code.

NFPA 59A, Standard for the Production, Storage and Handling of Liquefied Natural Gas (LNG).

NFPA 61, Standard for the Prevention of Fire and Dust Explosions in Agricultural and Food Processing Facilities.

NFPA 70, National Electrical Code® (NEC®).

NFPA 77, Recommended Practice on Static Electricity.

NFPA 99, Standard for Health Care Facilities.

NFPA 120, Standard for Control in Coal Preparation Plants.

NFPA 407, Standard for Aircraft Fuel Servicing.

NFPA 409, Standard for Aircraft Hangars.

NFPA 780, Standard for the Installation of Lightning Protection Systems.

NFPA 8503, Standard for Pulverized Fuel Systems.

Offermann, P. F., "Lightning Protection of Structures," *Conference Record of the 1969 Fourth Annual Meeting of the IEEE Industry and General Applications Group, 69C5-IGA.*

Orville, R. E., and Songster, H., "The East Coast Lightning Detection Network," *IEEE Transactions on Power Delivery,* vol. PRWD-2, no. 3, July 1987.

Pearson, J. M., "Protection Against Static Electricity," *Automotive Transactions,* vol. 21, 1940.

"Static Electricity," Circular C-438, National Bureau of Standards, Boulder, CO. Washington, DC: United States Government Printing Office.

"Static Electricity," in *Handbook of Industrial Loss Prevention.* Factory Mutual Engineering Corporation, 1968, Chapter 30.

[8]NFPA publications are available from Publications Sales, National Fire Protection Association, 1 Batterymarch Park, P.O. Box 9101, Quincy, MA 02269-9101, USA (http://www.nfpa.org/).

 Copyright © 2007 IEEE. All rights reserved.

Authorized licensed use limited to: COLORADO SCHOOL OF MINES. Downloaded on October 04,2023 at 04:18:37 UTC from IEEE Xplore. Restrictions apply.

Walsh, G. W., "A Review of Lightning Protection and Grounding Practices," *IEEE Transactions on Industry Applications,* vol. IA-9, March/April 1973.

Zipse, D. W., "Lightning Protection Systems: Advantages and Disadvantages," *IEEE/IAS/PCIC Technical Conference,* IAS/PCIC 93-06, pp. 51-64, September 13, 1993, St. Louis, MO.

3.5 Bibliography

[B1] Beach, R. "Mechanical Electrostatic Neutralizer Discharge and Safety Characteristics," *Mechanical Engineering,* vol. 71, pp. 329–334.

[B2] Hedlund, C. F., "Lightning Protection for Buildings," *IEEE Transactions on Industry and General Applications,* vol. IGA-3, January/February 1967, pp. 26–30.

[B3] Hughes, J. F., and Bright, A. W., "Electrostatic Hazards Associated with Power Handling in Silo Installations," *IEEE Transactions on Industry Applications,* vol. IA-15, January/February 1979.

[B4] IEC 61024-1:1990, Protection of Structures against Lightning—Part 1: General Principles.

[B5] Lewis, B., and Von Elbe, G., *Combustion, Flames and Explosions.* New York: Academic Press, 1951.

Copyright © 2007 IEEE. All rights reserved.

Authorized licensed use limited to: COLORADO SCHOOL OF MINES. Downloaded on October 04,2023 at 04:18:37 UTC from IEEE Xplore. Restrictions apply.

 Copyright © 2007 IEEE. All rights reserved.

Authorized licensed use limited to: COLORADO SCHOOL OF MINES. Downloaded on October 04,2023 at 04:18:37 UTC from IEEE Xplore. Restrictions apply.

Affordable Wire Management, Exhibit No. EX1019
Case No. IPR2024-00182
Page 170 of 225

Chapter 4
Connection to earth

4.1 Resistance to earth

4.1.1 Overview

This chapter provides fundamental concepts and recommended procedures for connecting the grounding systems of industrial and commercial power systems to the earth. The recommended procedures include measurement techniques for finding the resistance to earth, construction methods, and application of grounding electrodes.

4.1.2 Nature of grounding resistance

The grounding resistance of an electrode is comprised of the following:

a) Resistance of the (metal) electrode

b) Contact resistance between the electrode and the soil

c) Resistance of the soil, from the electrode surface outward, in the geometry set up for the flow of current outward from the electrode to infinite earth

The first two resistances can be made relatively small with respect to the third and can be neglected for all practical purposes. The third element, resistance of the soil, is the one to be discussed here.

As the earth is (relatively) infinite in its size compared to the grounding systems as we know them, so too is its capacity to absorb a virtually unlimited supply of current. Practically, however, this unlimited current to the earth is transmitted across the metal electrode-earth soil interface in a way that is best described as follows:

Around a grounding electrode, the resistance of the soil is the sum of the series resistances of virtual shells of earth, located progressively outward from the rod. The shell nearest the rod has the smallest circumferential area or cross section, so it has the highest resistance. Successive shells outside this one have progressively larger areas, and thus progressively lower resistances. As the radius from the rod increases, the incremental resistance per unit of radius decreases effectively to nearly zero.

To help visualize this, Figure 4-1 shows a typical 3 m (10 ft) by 16 mm (5/8 in) ground rod in soil. The path of ground current outward from the rod surface consists of successive cylindrical and hemispherical shells. As the distance from the rod increases, so do the cross-sectional areas of the individual shells. As the area of the shells increase, their individual series resistances decrease inversely with the area. Table 4-1 shows the result of carrying out this calculation based on the distance of 7.62 m (25 ft) representing 100% of the total earth resistance. The table shows that in the first 0.03 m (0.1 ft) away from the rod surface, 25% of the total resistance is incurred.

Copyright © 2007 IEEE. All rights reserved.

Authorized licensed use limited to: COLORADO SCHOOL OF MINES. Downloaded on October 04,2023 at 04:18:37 UTC from IEEE Xplore. Restrictions apply.

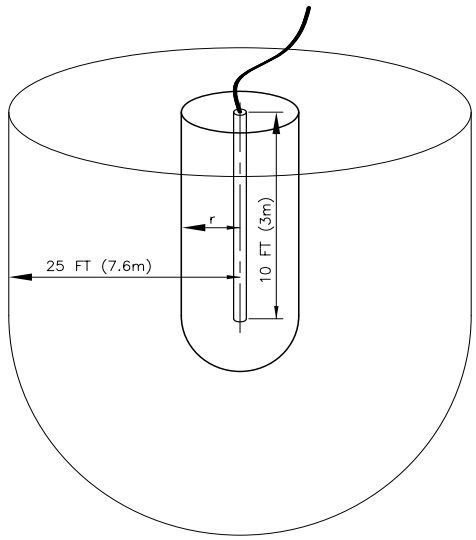

Figure 4-1—Electrode resistance development

In the first 0.15 m (0.5 ft) and 0.3 m (l.0 ft), 52% and 68%, respectively, of the total resistance is incurred.

Therefore, it is shown that the first few inches away from the rod are the most important ones, as far as reducing the electrode resistance is concerned. In high soil-resistivity locations, decreasing the soil resistivity in this area, such as by chemical treatment or the use of concrete, will be most useful in improving the effectiveness of a grounding electrode system.

Table 4-1—Electrode resistance at a radius *r* m (ft) from a 3 m (10 ft) long by 15.88 mm (5/8 in) diameter rod [where total resistance at *r* = 7.6 m (25 ft) = 100%]

Distance from electrode surface (*r*)		Approximate percentage of total resistance
(m)	(ft)	
0.03	0.1	25
0.06	0.2	38
0.09	0.3	46
0.15	0.5	52
0.3	1.0	68

 Copyright © 2007 IEEE. All rights reserved.

Authorized licensed use limited to: COLORADO SCHOOL OF MINES. Downloaded on October 04,2023 at 04:18:37 UTC from IEEE Xplore. Restrictions apply.

Table 4-1—Electrode resistance at a radius *r* m (ft) from a 3 m (10 ft) long by 15.88 mm (5/8 in) diameter rod [where total resistance at *r* = 7.6 m (25 ft) = 100%] *(continued)*

Distance from electrode surface (*r*)		Approximate percentage of total resistance
(m)	(ft)	
1.5	5.0	86
3.0	10.0	94
4.6	15.0	97
6.1	20.0	99
7.6	25.0	100
30.5	(100.0)[a]	(104)
305.0	(1000.0)[a]	(117)

[a]These figures show that for the most practical reasons the majority of the resistance to remote earth occurs within 7.6 m (25 ft) of the electrode, i.e., at 1000 ft the resistance is only 17% higher than that of 7.6 m (25 ft).

Multiple electrodes will not reduce the earth ground resistance unless adequate spacing is maintained. Multiple electrodes closely spaced do not have a resistance reciprocally proportional to their number. This characteristic is caused by the common mutual resistance in which the current of each raises the voltage of the other. Since the voltage is higher for the same current flow, the resistance is increased by the mutual resistance.

4.1.3 Recommended acceptable values

The most elaborate grounding system may not perform satisfactorily unless the connection of the system to earth is adequate for the particular installation. It follows, therefore, that the earth connection is one of the most important parts of the whole grounding system. It is also the most difficult part to design.

The connection to earth or the electrode system needs to have a sufficiently low resistance to minimize the potential for shock to personnel who may be in the vicinity of equipment frames, enclosures, conductors, or the electrodes themselves as a result of lightning strokes or unintentional contact of conductors with higher voltage conductors and to limit transient overvoltages.

The National Electrical Code® (NEC®) NFPA 70[1] for example, stipulates that the earth or structural metal frame of a building shall not be used as the effective (sole) equipment grounding conductor (EGC) and that a grounded system conductor shall be run to each service.

[1] Information on references can be found in 4.5.

Copyright © 2007 IEEE. All rights reserved.

Authorized licensed use limited to: COLORADO SCHOOL OF MINES. Downloaded on October 04,2023 at 04:18:37 UTC from IEEE Xplore. Restrictions apply.

The development of a low-resistance ground electrode is of paramount importance to satisfy the requirements for system feeders from utilities, where the fault return path is via the ground. Also, secondarily, as a backup to the equipment grounds, which may occasionally be open-circuited unintentionally. Logically, the lower the resistance of the grounding system, the more adequately these requirements are met. Yet, installations with lower available levels of ground-fault current do not require as low a value of grounding resistance as do larger systems with higher levels of ground-fault current. System ground resistances of less than 1 ohm may be obtained by the use of a number of individual electrodes connected together. Such a low resistance is only required for large substations, transmission lines, or generating stations. Resistances in the 1 ohm to 5 ohm range are generally found suitable for industrial plant substations and buildings and large commercial installations. Special grounding considerations for Arctic conditions will not be addressed, but additional information is available in Gill, and Beck and Yu.

The 25 ohm value noted in the NEC applies to the maximum resistance for a single electrode consisting of a rod, pipe, or plate. If a higher resistance is obtained for a single electrode, a second electrode of any of the types specified in the NEC is required. This should not be interpreted to mean that 25 ohm is a satisfactory resistance value for a grounding system.

In contrast, the Canadian Electrical Code (CEC), CSA C22.1 uses a criterion of maximum station ground rise of 5000 V (or less) under maximum ground-fault conditions and step/ touch voltages to be shown values stipulated in the CEC (basically these values are the same values given in IEEE Std 80™). Prior to 1978, the CEC used a criterion of station ground resistance required to be less than 1 ohm, which was found to be particularly burdensome for small capacity industrial type substations. The method stipulated in the CEC is based on the sound rationale that the criterion is safety based. However, its shortcomings are evident in the contractor-inspector interface where calculations are required rather than (relatively) simple ground resistance checks.

4.1.4 Resistivity of soils

It is *strongly* recommended that the resistivity of the earth at the desired location of the connection be investigated. The resistivity of soils varies with the depth from the surface, the type and concentration of soluble chemicals in the soil, the moisture content, and the soil temperature. In other words, the resistivity is that of the electrolyte in the soil. The presence of surface water does not necessarily indicate low resistivity. Representative values of resistivity for general types of soils are given in Table 4-2 (see Cully, Jacoditis, and Middleton). The effects of moisture and temperature are shown in Table 4-3 (see Telford et al.) and Table 4-4 (see IEEE Std 81™).

4.1.5 Calculation of resistance to earth

The resistance to earth may be calculated and measured. The calculation has been simplified to a great extent by the formulas developed in Dwight and presented in Table 4-5. It should be stated that these formulas are approximations only and given the state of today's capabilities with respect to computer-derived models of earth systems and grounding design, strong consideration to using those tools should be examined.

 Copyright © 2007 IEEE. All rights reserved.

Authorized licensed use limited to: COLORADO SCHOOL OF MINES. Downloaded on October 04,2023 at 04:18:37 UTC from IEEE Xplore. Restrictions apply.

A simplified formula for the most widely used electrode type, accurate to within 15% (resistance from a single 3 m (10 ft) long by 5/8 in (16 mm) diameter rod, in earth of uniform resistivity of ρ (ohm-cm), is shown in Equation (4.1):

$$R_g(\text{rod})(\text{ohm}) = \frac{\rho(\text{ohm-cm})}{298\ \text{cm}} \tag{4.1}$$

Multiple electrodes in parallel yield a lower resistance to ground than a single electrode. Multiple rods are commonly used to provide the low grounding resistance required by high-capacity installations. Adding a second rod does not, however, provide a total resistance of half that of a single rod, unless the two are several rod lengths apart. A useful rule is that grounding systems of 2 to 24 rods placed one rod length apart in a line, hollow triangle, circle, or square will provide a grounding resistance divided by the number of rods and multiplied by the factor F taken from Table 4-6. Additional considerations with respect to step and touch potentials would be addressed by the geometry.

Table 4-2—Resistivity of soils and resistance of single rods

Soil description	Group symbol[a]	Average resistivity (ohm-cm)	Resistance of 15.88 mm × 3 m (5/8 in × 10 ft) rod (ohm)
Well-graded gravel, gravel-sand mixtures, little or no fines	GW	60 000 to 100 000	180 to 300
Poorly graded gravels, gravel-sand mixtures, little or no fines	GP	100 000 to 250 000	300 to 750
Clayey gravel, poorly graded gravel, sand-clay mixtures	GC	20 000 to 40 000	60 to 120
Silty sands, poorly graded sand-silts mixtures	SM	10 000 to 50 000	30 to 150
Clayey sands, poorly graded sand-clay mixtures	SC	5000 to 20 000	15 to 60
Silty or clayey fine sands with slight plasticity	ML	3000 to 8000	9 to 24
Fine sandy or silty soils, elastic silts	MH	8000 to 30 000	24 to 90
Gravelly clays, sandy clays, silty clays, lean clays	CL	2500 to 6000[b]	17 to 18[b]
Inorganic clays of high plasticity	CH	1000 to 5500[b]	3 to 16[b]

[a]The terminology used in these descriptions is from the Unified Soil Classification System (USCS) and is a standard method of describing soils in a geotechnical or geophysical report.
[b]These soil classification resistivity results are highly influenced by the presence of moisture.

Copyright © 2007 IEEE. All rights reserved.

Authorized licensed use limited to: COLORADO SCHOOL OF MINES. Downloaded on October 04,2023 at 04:18:37 UTC from IEEE Xplore. Restrictions apply.

Table 4-3—Effect of moisture content on soil resistivity

Moisture content (% by weight)	Top soil	Resistivity (ohm-cm) sandy loam	Red clay
2	No data	185 000	No data
4	No data	60 000	No data
6	135 000	38 000	No data
8	90 000	28 000	No data
10	60 000	22 000	No data
12	35 000	17 000	180 000
14	25 000	14 000	55 000
16	20 000	12 000	20 000
18	15 000	10 000	14 000
20	12 000	9 000	10 000
22	10 000	8 000	9 000
24	10 000	7 000	8 000

Table 4-4—Effect of temperature on soil resistivity

Temperature (C°)	Resistivity (ohm-cm)
–5	70 000
0	30 000
0	10 000
10	8000
20	7000
30	6000
40	5000
50	4000

Placing additional rods within the periphery of a square, circle, or other shape will not appreciably reduce the grounding resistance below that of the peripheral rods alone.

 Copyright © 2007 IEEE. All rights reserved.

Authorized licensed use limited to: COLORADO SCHOOL OF MINES. Downloaded on October 04,2023 at 04:18:37 UTC from IEEE Xplore. Restrictions apply.

Affordable Wire Management, Exhibit No. EX1019
Case No. IPR2024-00182
Page 176 of 225

Table 4-5—Formulas for the calculation of resistances to ground

	Hemisphere radius a	$R = \frac{\rho}{2\pi a}$
•	One ground rod length L, radius a	$R = \frac{\rho}{2\pi L}\left(\ln\frac{4L}{a} - 1\right)$
• •	Two ground rods $s > L$; spacing s	$R = \frac{\rho}{4\pi L}\left(\ln\frac{4L}{a} - 1\right) + \frac{\rho}{4\pi s}\left(1 - \frac{L^2}{3s^2} + \frac{2L^4}{5s^4}\cdots\right)$
••	Two ground rods $s < L$; spacing s	$R = \frac{\rho}{4\pi L}\left(\ln\frac{4L}{a} + \ln\frac{4L}{s} - 2 + \frac{s}{2L} - \frac{s^2}{16L^2} + \frac{s^4}{512L^4}\cdots\right)$
—	Buried horizontal wire length $2L$, depth $s/2$	$R = \frac{\rho}{4\pi L}\left(\ln\frac{4L}{a} + \ln\frac{4L}{s} - 2 + \frac{s}{2L} - \frac{s^2}{16L^2} + \frac{s^4}{512L^4}\cdots\right)$
L	Right-angle turn of wire length of arm L, depth $s/2$	$R = \frac{\rho}{4\pi L}\left(\ln\frac{2L}{a} + \ln\frac{2L}{s} - 0.2373 + 0.2146\frac{s}{L} + 0.1035\frac{s^2}{L^2} - 0.0424\frac{s^4}{L^4}\cdots\right)$
⅄	Three-point star length of arm L, depth $s/2$	$R = \frac{\rho}{6\pi L}\left(\ln\frac{2L}{a} + \ln\frac{2L}{s} + 1.071 - 0.209\frac{s}{L} + 0.238\frac{s^2}{L^2} - 0.054\frac{s^4}{L^4}\cdots\right)$
+	Four-point star length of arm L, depth $s/2$	$R = \frac{\rho}{8\pi L}\left(\ln\frac{2L}{a} + \ln\frac{2L}{s} + 2.912 - 1.071\frac{s}{L} + 0.645\frac{s^2}{L^2} - 0.145\frac{s^4}{L^4}\cdots\right)$
✳	Six-point star length of arm L, depth $s/2$	$R = \frac{\rho}{12\pi L}\left(\ln\frac{2L}{a} + \ln\frac{2L}{s} + 6.851 - 3.128\frac{s}{L} + 1.758\frac{s^2}{L^2} - 0.490\frac{s^4}{L^4}\cdots\right)$
✳	Eight-point star length of arm L, depth $s/2$	$R = \frac{\rho}{16\pi L}\left(\ln\frac{2L}{a} + \ln\frac{2L}{s} + 10.98 - 5.51\frac{s}{L} + 3.26\frac{s^2}{L^2} - 1.17\frac{s^4}{L^4}\cdots\right)$
○	Ring of wire diameter of ring D, diameter of wire d, depth $s/2$	$R = \frac{\rho}{2\pi^2 D}\left(\ln\frac{8D}{d} + \ln\frac{4D}{s}\right)$
—	Buried horizontal strip length $2L$, section a by b, depth $s/2$, $b < a/8$	$R = \frac{\rho}{4\pi L}\left(\ln\frac{4L}{a} + \frac{a^2 - \pi ab}{2(a+b)^2} + \ln\frac{4L}{s} - 1 + \frac{s}{2L} - \frac{s^2}{16L^2} + \frac{s^4}{512L^4}\cdots\right)$
⊘	Buried horizontal round plate radius a, depth $s/2$	$R = \frac{\rho}{8a} + \frac{\rho}{4\pi s}\left(1 - \frac{7}{12}\frac{a^2}{s^2} + \frac{33}{40}\frac{a^4}{s^4}\cdots\right)$
	Buried vertical round plate radius a, depth $s/2$	$R = \frac{\rho}{8a} + \frac{\rho}{4\pi s}\left(1 + \frac{7}{24}\frac{a^2}{s^2} + \frac{99}{320}\frac{a^4}{s^4}\cdots\right)$

NOTE—In Table 4-5, for 3 m (10 ft) rods of 12.7 mm, 15.88 mm, and 19.05 mm (1/2 in, 5/8 in, and 3/4 in) diameters, the grounding resistance may be quickly determined by dividing the soil resistivity ohm-cm, by 288, 298, and 307, respectively.[2]

[2]Notes in text, tables, and figures are given for information only and do not contain requirements needed to implement the standard.

Copyright © 2007 IEEE. All rights reserved.

Authorized licensed use limited to: COLORADO SCHOOL OF MINES. Downloaded on October 04,2023 at 04:18:37 UTC from IEEE Xplore. Restrictions apply.

Table 4-6—Multiplying factors for multiple rods

Number of rods	F
2	1.16
3	1.29
4	1.36
8	1.68
12	1.80
16	1.92
20	2.00
24	2.16

4.1.6 Current-loading capacity

One factor that should not be overlooked in designing a ground system is the current-loading capacity of a connection to earth. The temperature and moisture conditions immediately surrounding the electrode have a direct effect on the resistivity of this section of the grounding circuit. Currents passing from the electrode into the earth will have a definite effect on these two conditions. Therefore, the current-loading capacity of a connection must be analyzed from the standpoint of the nature of the grounding circuit and the types of loading that it can normally be expected to carry. Information useful in this regard for steel rods in concrete (reinforcing bars) is given in Dick and Holliday; Fagan and Lee; IEEE Std 80; and Zaborsky and Rittenhouse.

Currents of low magnitude, even if of long duration, will result in relatively little heating. The effect of heat conduction and the movement of moisture due to capillary action will maintain, in most cases, the resistivity of the earth at the electrode close to the original value.

Where the earth must dissipate high currents for short durations, no appreciable amount of heat can be dissipated by the normal process of thermal conductivity. The permissible current density for a given temperature rise is inversely proportional to the square root of the soil resistivity. The effective resistance of the earth connection therefore depends on the number of such situations that could occur in succession before stable conditions in the earth are reestablished.

Since approximately 25% of the grounding resistance of each rod electrode occurs within a 0.03 m (0.1 ft) radius of the rod surface, serious heating and vaporization of the moisture adjacent to the rods may occur during high-energy system faults. When the moisture is

 Copyright © 2007 IEEE. All rights reserved.

Authorized licensed use limited to: COLORADO SCHOOL OF MINES. Downloaded on October 04,2023 at 04:18:37 UTC from IEEE Xplore. Restrictions apply.

dissipated due to the extreme heat, the effectiveness of the rod in the dried-out earth is substantially reduced, and arcing below the ground surface is likely. The boiling away of soil water results in steaming, or *smoking*, at the ground surface near the electrode. To prevent the smoking electrodes, a maximum current per meter of rod length for the total rod system should not exceed the values as determined by Equation (4.2):

$$I = \frac{1140 \times d}{\sqrt{\rho \times t}} \tag{4.2}$$

where

I = maximum current in amps/meter
d = rod diameter in mm
ρ = earth resistivity in ohm-cm
t = time in seconds (typically one second)

Ground currents of high magnitude and long duration are unusual, but could occur as the result of ground faults that are not cleared promptly. If ground currents of this type are anticipated, the system must cover a relatively large area and employ a sufficient number of electrodes and electrode connections. This will keep the current density in the earth to a low value (see IEEE Std 80; Shaffer and Venugopalan).

4.1.7 Soil treatment

Soil resistivity may be reduced anywhere from 15% to 90% by chemical treatment (depending on the kind and texture of the soil) (see Jones). There are a number of chemicals suitable for this purpose, including sodium chloride, magnesium sulphate, copper sulphate, and calcium chloride. Common salt and magnesium sulphate are most commonly used.

Chemicals are generally applied by placing them in a circular trench around the electrode in such a manner as to prevent direct contact with the electrode. While the positive effects of soil treatment will not become readily apparent, they may be accelerated by saturating the area with water. This may be done by providing a trickle of water from piping at the electrode locations. Also, such treatment is not permanent and must be replenished periodically, depending on the nature of the chemical treatment and the characteristics of the soil. Chemical treatment also has adverse effects on the corrosion protection of the ground electrodes, which must be assessed (see Coleman and Frostick; Headlee; Wiener).

Soil chemical treatment is an active solution to the problem of high resistivity soils. To be effective, a regular maintenance scheme must be established to ensure low-resistance grounding is achieved.

4.2 Ground electrodes

Basically all ground electrodes may be divided into two groups. The first group comprises underground metallic piping systems, effectively grounded metal building frameworks, metallic well casings, steel piling, and other underground metal structures installed for

Copyright © 2007 IEEE. All rights reserved.

Authorized licensed use limited to: COLORADO SCHOOL OF MINES. Downloaded on October 04,2023 at 04:18:37 UTC from IEEE Xplore. Restrictions apply.

purposes other than grounding. The second group comprises electrodes specifically designed for grounding purposes, also known as *made electrodes*.

Electrodes specifically designed for grounding purposes may be subdivided into driven electrodes, steel reinforcing bars in below-ground concrete (also known as *ufer grounds*), buried strips or cables, grids, buried plates, and counterpoises. The type selected will depend on the type of soil encountered and the available depth. Grids are frequently used for substations or generating stations to provide equipotential areas throughout the entire station in locations where hazards to life and property would justify the higher cost. They also require the least amount of buried material for a given electrode resistance. Buried plates have not been used extensively in recent years because of the high cost as compared to rods or strips. Also, when used in small numbers, buried plates are the least efficient type of made electrode. The counterpoise is a form of buried cable electrode most often used to ground transmission-line towers and structures (see Table 4-5; Table 4-6; Telford et al.).

When multiple electrodes are used, spacings of less than 3 m (10 ft) may not provide the most economical use of materials.

In selecting the number and size of grounding terminals, their current-discharge limitations must be recognized. If these are exceeded, the earth around the electrode may be exploded by steam generation or may be dried out to the extent of becoming nonconductive.

4.2.1 Existing electrodes

Metal building frames are normally attached by long anchor bolts to their concrete foundation's footings. Anchor bolts in concrete are not permitted by the NEC to serve as electrodes, while the metal building frame part of the grounding conductor path to a recognized electrode completes the "effective" grounding required in the NEC. For safety grounding and for small distribution systems where the ground currents are of relatively low magnitude, such electrodes are usually preferred because they are economical in first cost. However, before reliance can be placed on any electrodes of this group, it is essential that their resistance to earth be measured to ensure that some unforeseen discontinuity has not seriously affected their suitability. Also, care should be exercised to ensure that all parts that might become disconnected are effectively bonded together.

4.2.2 Driven electrodes

Driven electrodes are normally rods. Where soil conditions permit, a few deep rods are usually more satisfactory than a multiplicity of short rods, since the soil resistivity generally decreases (although this is not always the case; see Tagg) with depth due to the increased moisture content. A number of design charts for the determination of optimum ground-rod dimensions and spacing for a given installation are given in IEEE Std 80, while other definitive work on driven rods is found in Blattner, "Analysis of Soil Resistivity Test Methods," and "Prediction of Soil Resistivity and Ground Rod Resistance."

 Copyright © 2007 IEEE. All rights reserved.

Authorized licensed use limited to: COLORADO SCHOOL OF MINES. Downloaded on October 04,2023 at 04:18:37 UTC from IEEE Xplore. Restrictions apply.

4.2.3 Concrete encased electrodes

Concrete below ground level is a semi-conducting medium of about 3000 ohm-cm resistivity at 20 °C, or somewhat lower than the average loam soil. Consequently, in earth of average or high resistivity, the encasement of rod or wire electrodes in concrete results in lower resistance than when a similar electrode is placed directly into earth. This is due to a reduction of the resistance of the material closest to the primary electrode, in much the same manner as chemical treatment of the earth reacts near the electrode. While it is justifiable to excavate or drill holes for the placement of concrete for ground grid purposes in some locations, the widespread use of steel reinforcing bars in concrete foundation and footings provides a ready-made supply of grounding electrodes at structures utilizing this type of construction. It is only necessary to bring out an adequate electrical connection from a main reinforcing bar of each such footing for attachment to the building ground bus or structural steel (see Rajan and Venugopalan).

Foundations may be of two types: continuous footings around the building periphery or spread column footings, which are vertical members tied at the top (aboveground) by the walls. For the former type of foundation, one can tie the vertical rebar in the walls to the horizontal rebar in the footings to provide a continuous loop around the building. At each consecutive, or alternatively, at every second consecutive column location, the vertical rebar can be tapped with a similar material (rebar extension or similar) and affixed to the column. In this way, use of existing structural rebar can provide a superior earth (compared to burial apart from footing).

The other type of foundation, the column footing or spread footing, can be used similarly but only where the structural steel has been effectively grounded. A perimeter bonding mechanism should be utilized that can effectively bond the multiple footings together (within the wall at or below grade). This bonding mechanism can be either reinforcement bar or copper ground conductor.

Each footing's electrode has a resistance equal to or lower than that of a driven rod of equal depth. The large number of such footings inherent to buildings will provide a net ground resistance considerably lower than that normally provided by other made electrode methods, generally below 1 ohm and frequently of the order of 0.25 ohm.

Two methods may be used to connect the vertical rebar to the building columns. The first method ties the vertical rebar element to the anchor bolts. Thus, the steel columns are grounded through the bolts and nuts. The other method requires a pigtail of copper penetrating the top of the wall that is welded or bolted to the steel member.

Caution must be exercised in both the choosing of the size of the rebar for the available fault current and in the method in which the connections are made between rebar elements. Owing principally to the fact that this technique is not used widely and to the requirement for good connections for superior performance, this method may not be satisfactory for all building projects. In these projects, use of copper conductor instead of rebar elements is recommended.

Copyright © 2007 IEEE. All rights reserved.

Authorized licensed use limited to: COLORADO SCHOOL OF MINES. Downloaded on October 04,2023 at 04:18:37 UTC from IEEE Xplore. Restrictions apply.

Only footings at the building periphery are effective. For practical purposes the net grounding resistance (to remote earth) will not be lowered by "rebar ground rods" within the area encompassed by the periphery of the building. However, it should be noted as a precaution that lack of bonding between the anchor bolts and rebar may be responsible for the following:

a) Occasional failure to tower footing structure from current passage through the intervening concrete under heavy fault conditions, and

b) Dry-out weakening of intervening concrete from moderate continuous current flow through the concrete where the building process involved continuous current leakage as in chemical cell (dc) plants.

To ensure that high magnitude ground-fault currents do not destructively explode the concrete due to rapid drying out of the moisture in the concrete surrounding the rebar, the size of the rebars chosen for this duty is critical. The current per foot or rebar is summarized in Table 4-7.

Table 4-7—Current capacity of building rebar

Bar #	Rod diameter		Ampere/foot	
	(mm)	(in)	5 cycle clearing time	1 s clearing time
4	12.70	1/2	112	32
5	15.88	5/8	135	39
6	19.05	3/4	157	46
8	25.40	1	200	58
11	34.93	1 3/8	270	78

Test results and design data for the determination of the ground resistance of single and multiple concrete-encased footing electrodes are given in Fagan and Lee.

Steel rods in concrete in (irregular) excavations in rock or very rocky soil have been found greatly superior to other types of made electrodes. This electrode type provides additional grounding for the majority of the steel towers of high-voltage transmission lines.

4.2.4 Other electrodes

Where bedrock is near the surface, or where sand is encountered, the soil is apt to be very dry and of high resistivity, and it is necessary to have an extensive earthing connection. Under such conditions, buried metal strips, wires, or cables offer the most economical solution. Since the effectiveness of this grounding terminal for lightning stroke discharges is a function of its inductance, the use of a number of well-spaced shorter strips in parallel

 Copyright © 2007 IEEE. All rights reserved.

Authorized licensed use limited to: COLORADO SCHOOL OF MINES. Downloaded on October 04,2023 at 04:18:37 UTC from IEEE Xplore. Restrictions apply.

is preferable to one or more long strips. The depth at which the strips are buried may not be critical. However, as Table 4-4 indicates, temperature (and thus depth) can have an effect in areas where soil temperatures can go below freezing. Tests by the National Institute of Science and Technology (NIST) (see Peters) show that the resistance decreases only about 5% when the burial depth is increased from 0.5 m to 1 m (18 in to 36 in), based on uniform soil resistivity. Similarly, the effect of conductor size is extremely small.

The preferred practice with plate electrodes is to bury them on edge, because a minimum of excavation is required and it is possible to obtain better contact with the soil when backfilling. There appears to be little difference between the effective resistance of horizontal and vertical plates. For commonly used plates of 0.9 m^2 to 1.9 m^2 (10 ft^2 to 20 ft^2), the optimum burial depth is 1.52 m to 2.4 m (5 ft to 8 ft).

4.2.5 Substation grounding

At large electrical substations, the ground-fault current is generally high, and the likelihood of persons present there could also be high. Problems from this are high shock hazard from touching grounded metal parts while standing on the earth, walking on earth within the substation, or while walking outside the substation in contact with the fence. IEEE Std 80 amply describes this problem and provides design data for such grounding systems. The basic characteristics and design elements for extensive grid systems are given in Gross, Chitnis, and Stratton, and numerous references concerning this subject exist in IEEE Std 80.

Coarse crushed rock (e.g., granite), is normally spread all over the surface of the soil within such a substation grid area, not for housekeeping reasons, but to provide a high-resistance surface treatment to reduce the hazard from step potential to persons within this area during a severe fault. Granite rock (granite porphyry), even when wet from rain, has a high insulation resistance [4.5×10^5 ohm-cm wet, 1.3×10^8 ohm-cm dry (see IEEE Std 80)]. It is reasonable to be unable to use good quality crushed stone due to the location the substation may be in, so other means to increase the safety of personnel may be required. Asphalt can be used because of its high wet resistivity (>1 000 000 ohm-cm).

4.2.6 Transferred earth potentials

The phenomenon of a difference of potential at one location on the earth with respect to another location is known as *transferred earth potential* (see Nichols and Shipp).

The ground potential rise of a substation may be on the order of some 5000 V, which may be transferred out to a nonfault location by a ground conductor (or metal pipe, rail, etc.) leaving the station. This situation is to be avoided to ensure both personnel and equipment protection at the nonfaulted end.

Steps to alleviate this transferred potential problem include the bonding together of ground mats (that are within a range of approximately 30 m to 90 m (100 ft to 300 ft) apart, and the use of isolation transformers. This problem was recognized by utilities in the application of pilot wire protection where the low-voltage conductors (pilot wire

Copyright © 2007 IEEE. All rights reserved.

Authorized licensed use limited to: COLORADO SCHOOL OF MINES. Downloaded on October 04,2023 at 04:18:37 UTC from IEEE Xplore. Restrictions apply.

circuit) were interconnecting two remote ground grids. Most of the ameliorating techniques were based on the utilities solution to this basic problem.

Rail and pipe isolation joints may be used to limit the travel of transferred potentials. Additional information on this subject is found in IEEE Std 242™ *(IEEE Buff Book™);* IEEE Std 367™; IEEE Std 487™; Nichols and Shipp; and Rajan and Venugopalan.

4.3 Methods and techniques of construction

4.3.1 Choice of rods

Ground rods are manufactured in diameters of 9.53, 12.7, 15.88, 19.05, and 25.4 mm (3/8, 1/2, 5/8, 3/4, and 1 in, respectively) and in lengths of 1.5 m to 12.2 m (5 ft to 40 ft). For most applications, the diameters of 2.7, 15.88, and 19.05 mm (1/2, 5/8, and 3/4 in, respectively) are satisfactory. The NEC specified that rods of steel or iron shall be at least 15.88 mm (5/8 in) in diameter and that rods of nonferrous materials shall not be less than 2.7 mm (1/2 in) in diameter. Copper-clad steel, one of the most common types of rods, permits driving to considerable depth without destruction of the rod itself, while the copper coat permits direct copper-to-copper connection between the ground wire and the rod. In addition to the copper-clad steel, galvanized steel rods and stainless steel rods are available. Stainless rods must be reviewed with soil conditions to ensure against the possibility of stress corrosion cracking (see Fowler and Lewicki).

Some rods are available in sections for ease of driving. As each section is driven toward ground level, another section is added by use of a coupling (threaded, compression sleeve, or welded), making a continuous conductor. A removable stud or special driving head will take the driving blows and avoid damage to the threads at the end of the rod. For safety reasons, rods should be driven so that no unguarded length remains aboveground.

The effect of the rod diameter on the resistance of the connection to earth is small. The mechanical rigidity required for driving mainly determines the diameter of the rod. It is advantageous to select the smallest diameter rod that meets the driving requirements. Average soil conditions will permit the use of the 2.7 mm (1/2 in) rod. The 15.88 mm (5/8 in) rod can be driven in nearly all types of soil, and the 19.05 mm (3/4 in) rod may be reserved for exceptionally hard driving conditions or for deep-driven rods.

For ordinary soil condition, the 3 m (10 ft) length of rod has become fairly well established as a minimum standard length to meet the code requirement of a minimum of 2.44 buried meters (8 buried feet).

4.3.2 Methods of driving rods

Sledging requires a minimum of driving equipment, but may require considerable time per foot of rod. A modification of the sledging process, consisting of a chuck and sliding hammer, permits the work to be carried on at a level convenient to the worker without a ladder or auxiliary platform. An additional advantage is that the blow is delivered to the rod at a point not far from the ground line, thus permitting rods to be driven to greater

 Copyright © 2007 IEEE. All rights reserved.

Authorized licensed use limited to: COLORADO SCHOOL OF MINES. Downloaded on October 04,2023 at 04:18:37 UTC from IEEE Xplore. Restrictions apply.

depths than would be possible by hand sledging. If rods are to be driven on a comparatively large scale, it is desirable to provide power-driving equipment. Electric, pneumatic, and gasoline-driven hammers are available, the first two requiring sources of power. Regardless of the type of driving tool used, precautions should be taken to prevent mushrooming of the head.

4.3.3 Connecting to electrodes

Connections to electrodes are usually made by one of several means: mechanical, fusing, or compression. The first of these methods, mechanical fittings, is best suited for making connections to ground as the fittings are often easily disconnected, allowing for periodic ground-to-earth measurements. Corrosion can present a problem and should be considered when making mechanical connections. For example, a mechanical fitting made from a copper alloy that is high in zinc content (Zn 15%) would be susceptible to dealloying when exposed to a moist, slightly acidic environment. If not specified for direct burial applications, mechanical connections should remain accessible for inspection and servicing.

Another method of connecting a grounding electrode conductor (GEC) to a grounding electrode is fusing, often accomplished by an exothermic or weld-type process. This method provides a permanent connection with low contact resistance and provides a certain amount of immunity to corrosion. It also permits the use of smaller copper cable (when connected with exothermic vs. mechanical fittings) because of the 1083 °C maximum temperature limitation, as compared to the maximum of 250 °C to 350 °C usually permitted for some mechanical connections (see IEEE Std 80). (The NEC imposes a minimum conductor size limitation, however.) This method does, however, have certain inherent limitations. It requires separate disconnecting means, such as aboveground bolted joints, for measurements of resistance to earth. Also, operators are required to be trained in the safe procedures of material handling and connection installation. This methodology cannot be used in the presence of volatile or explosive mixtures, or where the gaseous products of the operation would interfere with nearby operations. Connections in inclement weather can also be difficult if sufficient protection is not provided.

The third method, compression connections, is easy to install and has demonstrated savings in time and installation costs over other methods. Compression connections provide low contact resistance and minimize the possibility of poor connections. These connectors, however, cannot be disconnected and require a separate means of disconnecting the grounding system for resistance to earth measurements.

IEEE Std 837™ provides a means of qualifying connectors used in grounding. It is recommended that connections meet the requirements of IEEE Std 837. When utilizing electrode connections not qualified to this standard, IEEE Std 80 provides additional information on selection of connection methods, including temperature derating.

Copyright © 2007 IEEE. All rights reserved.

Authorized licensed use limited to: COLORADO SCHOOL OF MINES. Downloaded on October 04,2023 at 04:18:37 UTC from IEEE Xplore. Restrictions apply.

4.3.4 Joining to underground piping systems

Mechanical clamp-type fittings provide a secure means of connecting to pipe. Mechanical connections do not alter the physical properties of the pipe and should be used in applications where the structural integrity of the pipe cannot be compromised.

Welding or brazing are acceptable means of connecting to a pipe; welding being the preferable choice where local piping codes allow. However, the high temperatures required for these methods of connecting to a pipe will cause localized stress, which may impair the function of the pipe, particularly if it contains fluid under pressure. Stress relief operations should be applied after welding or brazing to offset local stresses made during the connection process.

Additional difficulties to consider when connecting to pipe are selecting appropriate fittings (see 4.3.3), preparing the surface of the pipe (see 4.3.6), and preventing the possibility of galvanic corrosion (see 4.4.5).

4.3.5 Joining to structural steel

Compression connections and mechanical fittings are best suited for connecting to structural steel that cannot be altered by drilling or welding. Bolted fittings lend themselves best to structural steel that can be field drilled but not welded. Connector material should be chosen to minimize galvanic corrosion along the contact surfaces between the connector and the ground conductor. Protective finishes or compounds should be applied to further reduce the effects of corrosion. Brazing and the exothermic process can be used when connecting to structural steel, but should be restricted to applications that will not affect the structural properties of the steel nor any protective layer (such as galvanizing).

4.3.6 Preparing the joint

Before making any electrical connection, all contact surfaces must be cleaned of any insulating medium, such as insulation, grease, paint, dirt, or corrosion. Some means of connection will also require the removal of moisture or the application of surface protective compounds prior to connection installation. It is generally recommended the conductor surfaces that have been exposed be adequately cleaned to remove nonconductive oxides and contaminants. Surface preparation is extremely important to assure that a low contact resistance is achieved and sustained over time.

4.4 Measurement of resistance to earth

4.4.1 Need for measurement

Many indeterminate factors exist in any formula for the calculation of the resistance to earth. Total reliance should not be placed on the calculated results. For example, the soil resistivity varies inversely with the soil temperature and directly with the moisture content and may vary with the depth. The only certain way to determine the resistance is to

 Copyright © 2007 IEEE. All rights reserved.

Authorized licensed use limited to: COLORADO SCHOOL OF MINES. Downloaded on October 04,2023 at 04:18:37 UTC from IEEE Xplore. Restrictions apply.

measure it after the system has been completed. A desirable refinement is to measure the resistance of each electrode during installation.

4.4.2 Methods for measuring

The principles used in the measurement of resistance to earth are essentially the same as those used for measuring other types of electrical resistances. The various methods available make use of two auxiliary probes in addition to the electrode under test and are placed in the following three general classes:

a) The three-point method measures the resistance to earth of the electrode under test. This method is suitable for measuring the resistance to earth of isolated ground electrodes or small grounding installations. It is not suitable for the measurement of low-resistance installations.

b) The fall-of-potential method consists of injecting a known alternating current through the electrode under test and an auxiliary current probe. The meter measures the potential drop between these electrodes and an auxiliary potential probe set at various distances between the electrode under test and the auxiliary current probe. This method may be subject to considerable error if stray ground currents (at the same frequency of the test meter) are present, or if pipes or other conductors are buried near the test electrode.

c) The ratio method involves calculating the ratio of the resistance to earth of an auxiliary test electrode to the series resistance to earth of the electrode under test and a second auxiliary electrode. Multiplying this ratio by the series resistance gives the effective resistance of the ground electrodes. This method is more satisfactory than the triangulation methods since ratios of the resistance of the auxiliary test electrode to the resistance of the electrode under test may be as high as 300:1.

A more complete treatment of these three methods may be found in IEEE Std 81 and Fink and Carroll.

Commercially available portable testing instruments that provide the most convenient and satisfactory means for measuring insulation resistance are not suitable, however, because they cannot measure sufficiently low-resistance values. Also, ordinary low-resistance ohmmeters lack sufficient voltage for separating the grounding resistance of the auxiliary electrodes needed to make the test.

Precision in measurements of the resistance to earth is difficult to obtain and is usually not required. Normally, an accuracy on the order of 25% is sufficient in view of the many variables.

It is desirable, in measuring the resistance of the completed system, to allow some time to elapse before measurements are made, so that the earth around the electrodes will be consolidated. This does not apply to the auxiliary electrodes required in the test, since their resistance is negated in the test period.

Copyright © 2007 IEEE. All rights reserved.

Authorized licensed use limited to: COLORADO SCHOOL OF MINES. Downloaded on October 04,2023 at 04:18:37 UTC from IEEE Xplore. Restrictions apply.

4.4.3 Periodic testing

Tests should be made periodically after the original installation and test so that it can be determined whether the resistance is remaining constant or is increasing. If later tests show that the resistance is increasing to an undesirable value, steps should be taken to reduce the resistance. This can be accomplished by replacing corroded connections, adding electrodes, increasing the moisture content, or chemical soil treatment.

4.4.4 Earth resistivity measurements

The commercial portable instruments available for measuring the grounding electrode resistance normally may be used to measure the soil resistivity as well. For this purpose, they are connected to four short electrodes spaced uniformly in a line. Spacing between the two center electrodes is a direct measure of the effective depth desired for the resistivity. For example, a 3 m (10 ft) spacing will yield the average resistivity of the top 3 m (10 ft) of soil, and so on. This test method is known as the 4-pin Wenner Method and is among the most popular methods of determining earth resistivity.

The instrument yields an ohmic reading, which, when multiplied by 2π times the spacing in centimeters, is the soil resistivity in ohms-cm. Full instructions for this test are provided with each test instrument.

Other methods are fully described in IEEE Std 81.

4.4.5 Electrical grounding and corrosion

The basic objectives of a sound electrical grounding system are safety of personnel, reliability of equipment operation, fault current return, and limiting transient overvoltages. After these objectives have been satisfied, the effect of the grounding installation on corrosion must be considered. Systems, equipment, and lighting sometimes unknowingly contribute to the corrosion of underground conductors, structures, and piping. (See Lawson, p. 25; Manohar and Nagar; “Manual on Underground Corrosion Control in Rural Electric Systems”; McIntosh; Nelson and Holm; Rudenberg.)

The problem is galvanic corrosion. This type of corrosion is caused by electrically connected dissimilar metals that form a galvanic cell. Under these conditions, the following five factors determine the rate of corrosion:

a) Potential difference the two metals

b) Ratio of the exposed areas of the two metals

c) Resistance of the electrolyte

 Copyright © 2007 IEEE. All rights reserved.

Authorized licensed use limited to: COLORADO SCHOOL OF MINES. Downloaded on October 04,2023 at 04:18:37 UTC from IEEE Xplore. Restrictions apply.

d) Resistance of the external circuit

e) Stray currents between electrodes, conductors, structures, and pipes

Copper, the metal usually used for grounding, is a noble metal and can have serious corrosive effects on underground structures made of iron or steel that are electrically connected to the copper. These structures include underground pipelines, conduits, building steel, buried tanks, and buried lead-sheathed cables. Figure 4-2 shows the galvanic cell that results when steel and copper are electrically connected together. The steel may be a pipeline or conduit and the external connection could be conduit, the copper of a ground rod, pipe-rack steel, or through a ground rod connected directly to the conduit. The relative positions of steel (iron) and copper in the electromotive series, Table 4-8, produces a potential of 0.38 V, and according to Ohm's law, a current flows, with the soil (the electrolyte) completing the circuit. It is where the current leaves the steel (anode) and enters the soil that we have our trouble, namely, corrosion.

A dc current of 1 A flowing for one year will corrode away 20 lb of steel, 22 lb of copper, 75 lb of lead, or 26 lb of zinc. Thus, we see that the amount of current is associated with corrosion. With greater current, more metal will corrode away.

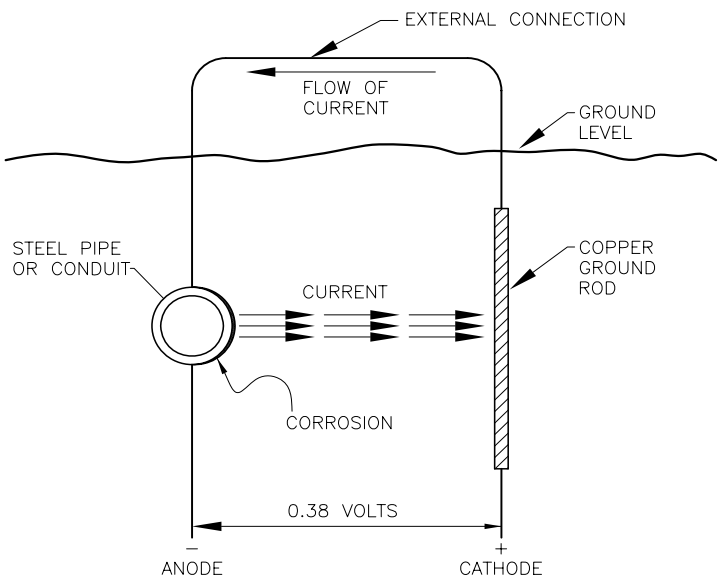

Figure 4-2—Galvanic cell–dissimilar metals

Copyright © 2007 IEEE. All rights reserved.

Authorized licensed use limited to: COLORADO SCHOOL OF MINES. Downloaded on October 04,2023 at 04:18:37 UTC from IEEE Xplore. Restrictions apply.

Table 4-8—Electromotive series of metals

Metal	Potential	
Barium	2.90	Base end or anodic end
Calcium	2.87	
Sodium	2.71	
Magnesium	2.40	
Aluminum	1.70	
Zinc	0.76	
Nickel	0.23	
Lead	0.12	
Iron	0.04	
Hydrogen	0.00	
Bismuth	–0.23	
Copper	–0.34	
Silver	–0.80	
Mercury	–0.80	
Gold	–1.50	Noble end or cathodic end

The potential difference between two metals will influence the amount of current that will flow between them. The greater the voltage, the greater the current and therefore the greater the rate of corrosion.

The resistance of the earth (electrolyte) will limit the current flow.

The total current is dependent on the potential difference between the two metals and the resistance between them. The intensity of the anode current is a function of the ratio of the area. This is one of basic principles in corrosion engineering and is used as a control factor in design.

A small anode and a large cathode should not be installed. In this case, the total current is confined in a small space and the current density is large. An example of this would be an underground pipeline running up and onto a ground pipe rack. The resulting copper-steel couple is made worse when the pipe is coated, as no coating is 100% effective. Small pinholes may appear in the coating, exposing the steel. The current is concentrated at these pinholes, causing leaks to occur in a very short time.

The electromotive series does not present all the facts about corrosion; it presents only its initial tendencies. The actual rate of corrosion is determined by the current, but the

 Copyright © 2007 IEEE. All rights reserved.

Authorized licensed use limited to: COLORADO SCHOOL OF MINES. Downloaded on October 04,2023 at 04:18:37 UTC from IEEE Xplore. Restrictions apply.

Affordable Wire Management, Exhibit No. EX1019
Case No. IPR2024-00182
Page 190 of 225

electromotive series determines which metals will waste away and which ones will remain unchanged.

The metals with positive values in Table 4-8 are on the base or anodic (anode) end of the series; these metals will corrode. The metals with the negative values are on the noble or cathodic (cathode) end and will be protected, thus the term *cathodic protection*. When a metal is the cathode, it is protected and will not corrode.

The resistance of the soil is one of the most important factors that affect the flow of current associated with galvanic corrosion. By Ohm's law, we find that the lower the resistance of the electrolyte, the larger the corrosion current. Consequently, the lower the soil resistivity, the greater the galvanic corrosion.

By using a different metal than copper for grounding, the copper-steel galvanic couple can be eliminated. If this metal were closer to iron in the electromotive series, there would be a smaller potential, therefore the galvanic couple would be less. The metal should have good electrical conductivity because a ground must offer low impedance to fault current and lightning. It should be noted that steel rebar, when encased in concrete, has approximately the same potential as copper and thus will not corrode.

Steel (carbon and stainless) has been used, and zinc has been recommended, for ground rods. Steel requires cathodic protection, as the steel rod may rust unless the more expensive stainless rods (see 4.3.1) are used.

Galvanized steel rods would not be used in actual grounding because the zinc will corrode away and expose bare steel, which would rust. Instead, we would use a zinc anode, which consists of a small steel core embedded in zinc. These come in many sizes, but the sizes that are best suited for a ground rod are designated by the American Zinc Institute as AZI-2-30 and AZI-4-60. The first number is the cross-sectional area in square inches, and the second number is the weight in pounds. Each is 1.52 m (5 ft) long.

Metal pairs, oxides, and electrolytic films can also be viewed as basic rectifying junctions that lead to electrolysis and metal migration in ac systems if stray or capacitive currents are present.

Cathodic protection also includes consumable anodes, i.e., zinc, magnesium, and low-voltage rectifiers or drainage panels that bias the protected metal (see Lawson). Active protection in the form of a dc impressed current system can also be installed to protect any susceptible metals in the ground from corrosion effects.

The corrosion problem is of considerable importance in dc systems, such as tanks containing explosive chemicals and mining or transit systems with negative running rails. In these cases, stray current and grounding control is practiced and accessible mitigation bonds to structures may be provided (see Sunde).

Copyright © 2007 IEEE. All rights reserved.

Authorized licensed use limited to: COLORADO SCHOOL OF MINES. Downloaded on October 04,2023 at 04:18:37 UTC from IEEE Xplore. Restrictions apply.

4.5 Normative references

The following referenced documents are indispensable for the application of this document (i.e., they must be understood and used, so each referenced document is cited in the text and its relationship to this document is explained). For dated references, only the edition cited applies. For undated references, the latest edition of the referenced document (including any amendments or corrigenda) applies.

Bashiki, R. S., Osterberg, C. K., and Dawalibi, F., "Earth Resistivity Measurements Using Cylindrical Electrodes at Short Spacings," *IEEE PWRD-2,* no. 1, January 1987, p. 64.

Beck, R. T., and Yu, L., "Design Considerations for Arctic Grounding Systems," *IEEE 1987 PCIC Conference Record.*

Blattner, C. J., "Analysis of Soil Resistivity Test Methods in Two Layer Earth," *IEEE PAS-104,* no. 12, December 1985.

Blattner, C. J., "Prediction of Soil Resistivity and Ground Rod Resistance for Deep Ground Electrodes," *IEEE PAS-99,* no. 5, September/October 1980.

Coleman, W. E., and Frostick, H., "Electrical Grounding and Cathodic Protection at the Fairless Works," presented by the AIEE Subcommittee on Cathodic Protection at the *1954 AIEE Winter General Meeting.*

CSA C22.1, Canadian Electrical Code Part 1—Safety Standard for Electrical Installations.[3]

Cully, R. W., Jacoditis, F. L., and Middleton, R. S., "E-phase System for Detection of Buried Granular Deposits, Symposium on Modern Innovations in Subsurface Explorations," *54th Annual Meeting of Transportation Research Boards.*

Dick, W. K., and Holliday, H. R., "Impulse and Alternating Current Tests on Grounding Electrodes in Soil Environment," *IEEE PAS-97,* no. 1, January/February 1978, pp. 102–108.

Dwight, H. B., "Calculation of Resistance to Ground," *AIEE Transactions*, vol. 55, December 1936, pp. 1319–1328.

Fagan, E. J., and Lee, R. H., "The Use of Concrete Enclosed Reinforcing Rods as Grounding Electrodes," *IEEE Transactions on Industry and General Applications,* vol. IGA-6, July/August 1970, pp. 337–348.

Fink, D. G., and Carroll, J. M., Eds. *Standard Handbook for Electrical Engineers.* New York: McGraw-Hill Book Company, 1968.

[3]CSA publications are available from the Canadian Standards Association (Standards Sales), 178 Rexdale Blvd., Etobicoke, Ontario, Canada M9W 1R3 (http://www.csa.ca/).

 Copyright © 2007 IEEE. All rights reserved.

Authorized licensed use limited to: COLORADO SCHOOL OF MINES. Downloaded on October 04,2023 at 04:18:37 UTC from IEEE Xplore. Restrictions apply.

Fowler, N. L., and Lewicki, T. F., Proposal to NEC Code Committee for Section 250-83 (c) (2), "Revise this Paragraph to Delete Stainless Steel," 22 October 1990.

Gill, H. W., "Design Problems for an Electric Power System in an Arctic Region," *IEEE Transactions on Industry Applications,* vol. IA-10, no. 2, March/April 1974.

Gross, E. T. B., Chitnis, B. V., and Stratton, L. J., "Grounding Grids for High-voltage Stations," *AIEE Transactions on Power Apparatus and Systems,* vol. 72, August 1953, pp. 799–810.

Headlee, J. F., "Cathodic Protection for Steel Mill Grounding Systems," *Iron and Steel Engineer,* March 1954.

IEEE Std 80, IEEE Guide for Safety in AC Substation Grounding.[4, 5]

IEEE Std 81, IEEE Guide for Measuring Earth Resistivity, Ground Impedance, and Earth Surface Potentials of a Ground System.

IEEE Std 242, IEEE Recommended Practice for Protection and Coordination of Industrial and Commercial Power Systems *(IEEE Buff Book)*.

IEEE Std 367, IEEE Recommended Practice for Determining Electric Power Station Ground Potential Rise and Induced Voltage From a Power Fault.

IEEE Std 487, IEEE Recommended Practice for the Protection of Wireline Communication Facilities Serving Electric Supply Locations.

IEEE Std 837, IEEE Standard for Qualifying Permanent Connections Used in Substation Grounding.

Jones, W. R., "Bentonite Rods Assure Ground Rod Installation in Problem Soils," *IEEE PES Transactions,* vol. PAS-99, no. 4, July/August 1980.

Kinyon, A. L., "Earth Resistivity Measurements for Grounding Grids," *AIEE Transactions,* vol. 20, December 1961, pp. 795–800.

Lawson, V. L., "Problems and Detection of Line Anchor and Substation Ground Grid Corrosion," *IEEE Transactions on Industry Applications,* vol. IA-24, no. 1, January/ February 1988.

Manohar, V. N., and Nagar, R. P., "Design of Steel Earthing Grids in India," *IEEE PAS-98,* no. 6, November/December 1979.

[4]IEEE publications are available from the Institute of Electrical and Electronics Engineers, 445 Hoes Lane, P.O. Box 1331, Piscataway, NJ 08855-1331, USA (http://standards.ieee.org/).

[5]The IEEE standards or products referred to in this clause are trademarks of the Institute of Electrical and Electronics Engineers, Inc.

Copyright © 2007 IEEE. All rights reserved.

Authorized licensed use limited to: COLORADO SCHOOL OF MINES. Downloaded on October 04,2023 at 04:18:37 UTC from IEEE Xplore. Restrictions apply.

"Manual on Underground Corrosion Control in Rural Electric Systems," REA Bulletin 161-23, September 1981.

McIntosh, D. H., "Grounding Where Corrosion Protection is Required," *IEEE Transactions on Industry Applications,* vol. IA-18, no. 6, November/December 1982.

Meliopoulos, A. P., et al., "Estimation of Soil Parameters from Driven Rod Measurements," *IEEE PAS-103,* no. 9, September 1984.

Nelson, J. P, and Holm, W. K., "A Cathodically Protected Electrical Substation Ground Grid," *IEEE Transactions on Industry Applications,* vol. IA-21, no. 2, March 1985, pp. 357.

NFPA 70, National Electrical Code® (NEC®).[6]

Nichols, N., and Shipp, David D., "Designing to Avoid Hazardous Transferred Earth Potentials," *IEEE Transactions on Industry Applications,* vol. IA-18, no. 4, July/August 1982.

Peters, O. S., "Ground Connections for Electric Systems," *Technologic Papers of the Bureau of Standards.* Washington, DC: National Bureau of Standards, 1918.

Pilot Wire Insulation and Protection, IL 41-971.4, Westinghouse Electric Corporation-Relay Instrument Division.

Preminger, J., "Evaluation of Concrete Encased Electrodes," *IEEE Transactions on Industry Applications,* vol. IA-11, no. 6, November/December 1975.

Rajan, S., and Venugopalan, S. I., "Corrosion and Grounding Systems," *IEEE Transactions on Industry Applications,* vol. IA-13, no. 4, July/August 1977, p. 297.

Rudenberg, R., "Grounding Principles and Practice-I: Fundamental Considerations on Ground Currents," *Electrical Engineering,* vol. 64, January 1945, pp. 1–13.

Shaffer, R. E., and Venugopalan, S. I., "Stray Current Control in Dade County Metrorail System," *IEEE IAS Annual Conference Record,* no. 80CH1575-0, 1980.

Sunde, E. D., *Earth Conduction Effects in Transmission Systems,* Chapter 2. New York: Macmillan, 1968.

Tagg, G. F., *Earth Resistances.* New York: Pitman, 1964.

Telford, W. M., et al., *Applied Geophysics.* Cambridge England: Cambridge University Press, 1976.

[6]NFPA publications are available from Publications Sales, National Fire Protection Association, 1 Batterymarch Park, P.O. Box 9101, Quincy, MA 02269-9101, USA (http://www.nfpa.org/).

 Copyright © 2007 IEEE. All rights reserved.

Authorized licensed use limited to: COLORADO SCHOOL OF MINES. Downloaded on October 04,2023 at 04:18:37 UTC from IEEE Xplore. Restrictions apply.

Thapar, B., Ferrer, O., and Blank, D. A., "Ground Resistance of Concrete Foundations in Substation Yards," *IEEE PWRD,* vol. 5, no. 1, January 1990.

Wiener, P. A., "Comparison of Concrete Encased Grounding Electrodes to Driven Ground Rods," *1969 IEEE ICPS Conference Record.*

Zaborsky, J., and Rittenhouse, J. W., "Design Charts for Determining Optimum Ground-Rod Dimensions," *AIEE Transactions on Power Apparatus and Systems,* vol. 72, August 1953, pp. 810–817.

Copyright © 2007 IEEE. All rights reserved.

Authorized licensed use limited to: COLORADO SCHOOL OF MINES. Downloaded on October 04,2023 at 04:18:37 UTC from IEEE Xplore. Restrictions apply.

 Copyright © 2007 IEEE. All rights reserved.

Authorized licensed use limited to: COLORADO SCHOOL OF MINES. Downloaded on October 04,2023 at 04:18:37 UTC from IEEE Xplore. Restrictions apply.

Affordable Wire Management, Exhibit No. EX1019
Case No. IPR2024-00182
Page 196 of 225

Chapter 5
Electronic equipment grounding

5.1 Introduction

5.1.1 Overview

This chapter provides an overview of recommended procedures for grounding electronic equipment connected to industrial and commercial power systems. Topics include system and equipment grounding techniques for: information technology equipment, data processing rooms, the grounding of shields, and mitigating radio frequency interference (RFI) of electronic equipment. Case histories identify examples of how undesirable operation can be corrected by appropriate grounding. For further information, see IEEE Std 1100™ *(IEEE Emerald Book™)*.[1]

5.1.2 General

The proper grounding of sensitive electronic equipment has been found to be one of the most important items in achieving the reliable performance of these systems. The term *electronic equipment* will be used for microprocessor-based systems such as computers, programmable logic controllers, industrial process plant distributed control systems, telecommunications systems, medical diagnostic imaging, and other related sensitive electronic equipment discussed in this chapter. The low signal voltage levels used in this type of equipment make it susceptible to random voltages far below levels that are perceptible to humans and that have no effect on electrical power equipment. For example, most modern electronic equipment is highly sensitive to static voltage charges, generated by humans in simple body movements. Certainly the voltages injected into the earth by lightning strokes even within several thousand feet, unless suitable neutralization is accomplished, can cause malfunction and damage the equipment.

Much has been learned not in how to prevent these sources of interference, but in how to prevent their entrance into these electronic equipment systems. With the means now available, malfunctions and damage from ground-transferred voltages can be minimized.

5.2 Definitions

For the purposes of this document, the following terms and definitions apply. *The Authoritative Dictionary of IEEE Standards Terms* [B3][2] should be referenced for terms not defined in this clause.

5.2.1 electronic equipment: In a generic sense, this refers to all analog and digital semiconductor-based equipment including data processing, telecommunications, process measurement and control, and other related electronic equipment and systems.

[1]Information on references can be found in 5.10.
[2]The numbers in brackets correspond to those of the bibliography in 5.11.

Copyright © 2007 IEEE. All rights reserved.

Authorized licensed use limited to: COLORADO SCHOOL OF MINES. Downloaded on October 04,2023 at 04:18:37 UTC from IEEE Xplore. Restrictions apply.

5.2.2 neutral: The point where the potential is equal in amplitude from every other conductor (see *The Authoritative Dictionary*). There may be occasions where a single-phase two-wire power source; a three-phase delta connection with one side center tapped; or a corner delta grounded system is referred to or used. In this case, the term *neutral* will refer to the conductor that is intentionally connected to ground.

NOTE—The term *neutral* also refers to the National Electrical Code® (NEC®) NFPA 70's *identified conductor.*[3]

5.2.3 isolated equipment ground: An insulated equipment grounding conductor (EGC) run in the same conduit or raceway as the supply conductors. This conductor is insulated from the metallic raceway and all ground points throughout its length. It originates at an isolated ground type receptacle or equipment input terminal block. The conductor may pass through one or more panel boards without connection to the panel-board grounding terminal, and terminates at an EGC terminal at the applicable derived system or service.

NOTE —This term is defined more specifically in the NEC.

5.3 History of computer grounding

5.3.1 Satisfying Code requirements

Because of the necessity for safety and the requirements of the NEC, electronic equipment were grounded. First they were grounded to the electrical power equipment grounding system of the building in which they were located. The EGC was either a green insulated wire or a bare wire. In many cases, the metallic conduit served this purpose. The equipment ground was connected, at the building service, to the incoming grounded conductor from the utility. At this point, the metallic enclosure was bonded, connected to the neutral, to the EGC, and to earth. Earth could be an effectively grounded metallic cold-water pipe, effectively grounded steel building frame, a concrete encased electrode (known as a *ufer ground*), a ground ring encircling the building, or electrodes specifically established for reference, such as a driven ground rod.

There was no particular requirement as to what part of the power system ground the electronic equipment ground was to be connected, so the connections were generally made to the ground conductor at the plug, receptacle, or panel supplying power to the electronic equipment**.** This satisfied NEC requirements in that no one could be shocked by touching the equipment enclosure under a phase-to-ground fault condition. As electronic equipment components became more complex and sensitive to lower voltages, it was found that transient voltages could be harmful and damaging to the solid-state devices. Electrical transient voltages were traced to the multiple connections from the neutral conductor to the ground system.

In a commercial or industrial building the neutral or grounded circuit conductor is connected to ground at the service equipment (main panel) and at the secondary side of a separately derived system (isolation transformer). It is not unusual to find the branch

[3]Notes in text, tables, and figures are given for information only and do not contain requirements needed to implement the standard.

 Copyright © 2007 IEEE. All rights reserved.

Authorized licensed use limited to: COLORADO SCHOOL OF MINES. Downloaded on October 04,2023 at 04:18:37 UTC from IEEE Xplore. Restrictions apply.

circuit distribution panel neutral bus bar connected to the metallic panel frame (ground), which is a violation of the NEC. One study showed 20% of the neutral conductors accidentally faulted to ground in circuits supplying lighting fixtures (see Zipse). With multiple connections of the neutral conductor to ground on the same power system, a portion of the load current flowed on the equipment grounding system to which the electronic equipment was referenced. This current flow transferred voltages into the grounding system of the electronic equipment, causing errors or worse. Figure 5-1 illustrates one of the conditions.

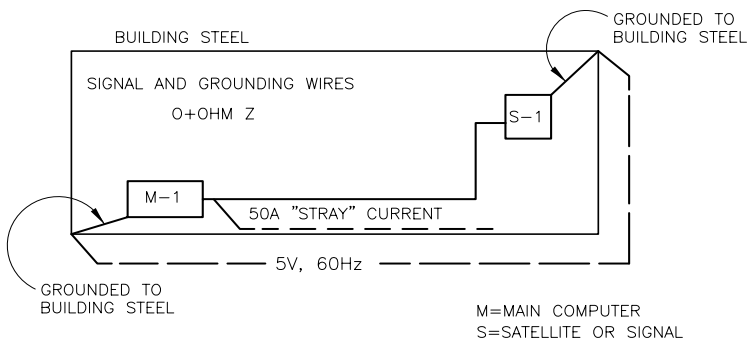

Figure 5-1—Ground currents resulting from multiple neutral-ground connections on the same power system

5.3.2 Electrical noise in power system ground

With the increasing complexity of electronic equipment systems, it became necessary to have peripheral electronic equipment or remote terminals, placed away from the location of the main electronic equipment. The remote electronic equipment locations had power supplies. These could be supplied from the main electronic equipment power system, but more likely they would be from another part of the building. It is not unusual for grounding (bonding) systems of a building to have measurable voltage differences from point to point, due to ground-current flow, either 60 Hz or transient high frequency. Thus, a connection to the power system ground at the remote location could reference the remote equipment to a ground point that was a few volts different in potential from the main electronic equipment ground. The interconnecting signal or data cable would complete a path for an uncontrolled current flow between these two ground points through the electronic equipment, causing malfunctions and failures. The electronic equipment personnel resolved to have nothing further to do with such building grounding systems. See Figure 5-2.

Copyright © 2007 IEEE. All rights reserved.

Authorized licensed use limited to: COLORADO SCHOOL OF MINES. Downloaded on October 04,2023 at 04:18:37 UTC from IEEE Xplore. Restrictions apply.

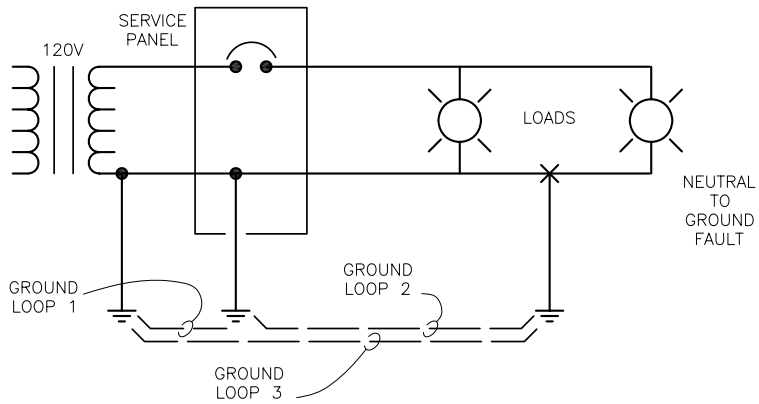

Figure 5-2—Stray current caused by two different ground references

5.4 System or equipment to be grounded

5.4.1 Power system

With electrical power systems, there are at least two groups or classes of grounding, as follows:

a) *System grounding.* The grounding of some part of the electrical power supply system, usually the system neutral.

b) *Equipment grounding.* The grounding of all the metallic equipment and enclosure frames, through bonding of all component parts and their connection to ground.

5.4.2 Electronic equipment

Like the electrical power supply system, electronic equipment has diversified systems to be grounded, as follows:

a) *Signal common grounding.* The signal common is also referred to as the *dc signal common*. The zero reference system for data lines, and the signal portion in general, represents the sensitive neutral of the electronic equipment. This is one of the systems that is sensitive to transient voltages and requires a stable reference point, with respect to a voltage potential.

b) *DC power supply reference ground bus.* The electronic equipment may have several different dc voltage systems, such as + 12 / 0 / – 12 V, + 5 / 0 / – 5 V.

c) *Equipment ground bus.* This is the metallic enclosure, or frame, of the electronic equipment. This may include the chassis of the electronic equipment elements, as well as the outer enclosure or cabinet. Some electronic equipment manufacturers refer to the equipment ground bus as the *safety ground bus.*

 Copyright © 2007 IEEE. All rights reserved.

Authorized licensed use limited to: COLORADO SCHOOL OF MINES. Downloaded on October 04,2023 at 04:18:37 UTC from IEEE Xplore. Restrictions apply.

In addition to these terms for the various ground bus systems, you may encounter such terms as: *ac safety (mains) grounds, computer reference ground, dc signal common, earth common, dc ground bus, dc master ground point*, and *power supply common ground point.* It appears that each electronic equipment company has generated its own term for various grounded parts of their systems. There is no uniformity in the terminology, although as you will see later, they all must end up connected together.

5.5 Grounding electronic equipment

5.5.1 Single-point connection

To prevent stray continuous currents or circulating currents from affecting the electronic equipment signals and operation, it is necessary to keep the electronic equipment ground system separate from the equipment ground components and connected together *at only one point.* (See Figure 5-3.)

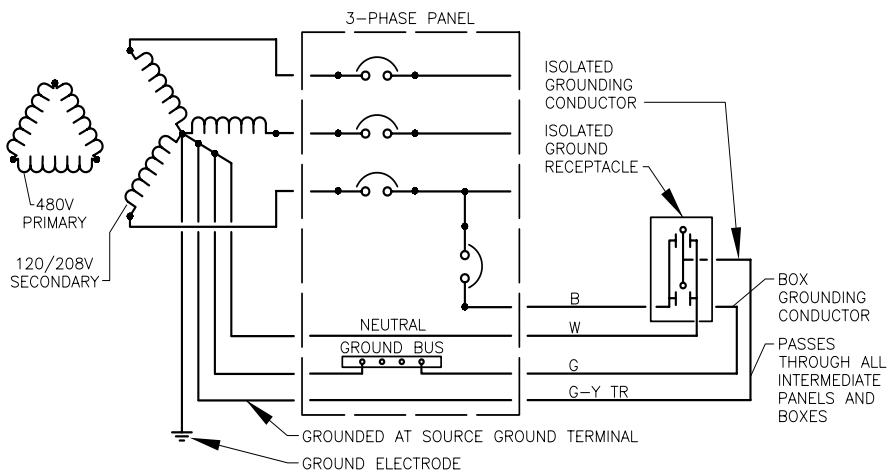

Figure 5-3—Insulated grounding conductor for sensitive plug-in equipment

The electronic equipment manufacturers may have several different ground systems. They may refer to them as the *power ground, signal ground, safety ground,* etc. With the exception of the safety ground, which usually is the equipment enclosure, required to be grounded by the NEC, all the other grounds will usually be terminated on a single point. It is the disposition of this ground point that is the basic cause of concern.

The one point where the two grounding systems, the electrical power grounding system and the electronic equipment grounding system, can be connected together is at one of two locations. Figure 5-3 shows the common point for the electrical power system grounding.

Copyright © 2007 IEEE. All rights reserved.

Authorized licensed use limited to: COLORADO SCHOOL OF MINES. Downloaded on October 04,2023 at 04:18:37 UTC from IEEE Xplore. Restrictions apply.

The electronic system ground should be bonded to the electrical system at the neutral-ground bond at the power source. This point will be either the service equipment (main panel) or the secondary of a separately derived system (isolation transformer).

Where an electronic equipment system master assembly is composed of several enclosures, the internal ground connections, not the enclosure ground, should be routed to one collection point, within the enclosure assemblies, and this one point connected to ground. The collection of the individual grounds should be in the form of a radial distribution system, or a *tree,* without any parallel ground paths.

If the internal signal ground connection is connected to the metallic enclosure instead of insulated from the enclosure, then all the component enclosures need to be insulated from ground or from a conducting floor on which they may be supported. This arrangement of collective signal/enclosure grounds creates an unsafe condition and is not recommended.

If the separate electronic equipment signal ground systems are isolated from the cabinet enclosure and brought together at this one common point, then it is not advisable or necessary to isolate the electronic equipment enclosures from the grounded electronic equipment floor or from any floor. The NEC permits sensitive electronic equipment to be isolated from the metallic raceway using a listed nonmetallic raceway fitting. A separate insulated EGC grounds the electronic equipment enclosure. (See 5.5.5 for additional information.)

5.5.2 Insulated grounding conductors

The NEC recognizes that sensitive plug-in equipment such as cash registers, personal computers, printers, etc. can be adversely affected by currents flowing in common EGCs, such as conduit, green or bare ground conductor, building steel, etc. To minimize such problems, the NEC permits an insulated grounding conductor to be run from the insulated grounding terminal of the receptacle back to the neutral-ground bond at the power source (main panel or secondary of a separately derived system). This conductor must be run in the *same* wireway, conduit, or raceway, with the conductor serving that receptacle load. This separate conductor is usually green with a yellow stripe. The conductor should not be connected to any grounding buses or common points between the receptacle load and the neutral-ground bond at the power source. This system can eliminate much of the common-mode (neutral-ground) noise on building power systems that can impact the reliable performance of plug-connected sensitive electronic equipment. To avoid any induced electrical noise into the insulated conductor ground-return path, only the supplied receptacle conductors should be in the metallic raceway and no other conductors permitted.

The use of an insulated EGC and an isolated grounding receptacle does not relieve the requirement for the metal parts of the receptacle box, raceway, conduit, etc., from being connected to the building equipment ground system (see Figure 5-3). The metallic raceway can provide the equipment ground for the box; however, if any nonmetallic raceway system is used to the receptacle box, this will usually require the following conductors:

 Copyright © 2007 IEEE. All rights reserved.

Authorized licensed use limited to: COLORADO SCHOOL OF MINES. Downloaded on October 04,2023 at 04:18:37 UTC from IEEE Xplore. Restrictions apply.

Affordable Wire Management, Exhibit No. EX1019
Case No. IPR2024-00182
Page 202 of 225

a) Phase conductor (usually black)

b) Identified (neutral) conductor (white)

c) System EGC (green)

d) Isolated EGC (usually green with yellow stripe)

Reliance on the metal raceway is not recommended. Harold Kaufmann's tests of where the current flows during a fault on power cables 4/0 AWG and larger concluded that an internal grounding conductor improves the efficiency of the ground-return path (see Kaufmann). For conductors 12 AWG to 6 AWG, Robert West showed that the increased impedance of the smaller line and internal grounding conductors is not a detrimental factor (see West). Internal ground-return conductors do improve reliability for all conductor sizes, especially when electronic equipment grounding is a concern.

Figure 5-3 illustrates the circuitry and insulated grounding conductor routing through intermediate panel(s) en route to the point where the neutral and ground are bonded at the power source.

Where there are large numbers of these insulated conductors, it is logical to connect them together onto an insulated equipment grounding bus in the distribution panel and install a single insulated EGC from the bus in the feeder raceway back to the power source.

5.5.3 Separate/isolated grounds

5.5.3.1 Description

Since the power grounding system had been found to cause malfunctions and failures of electronic equipment, a logical solution was to not use the building's electrical power equipment grounding system for grounding electronic equipment. A possible lack of understanding of the function and operation of the neutral conductor and the equipment ground system by electronic equipment manufacturers led to erroneous installation requirements. The chosen alternative was to ground electronic equipment to an isolated grounding electrode consisting of one or more driven rods separate from the power system grounding electrode system. These generally took the form of one to ten rods a few feet away from the building. These would have grounding resistance of from 10 ohm to 30 ohm or more. This additional resistance usually masked the electrical problem with the electronic equipment system by adding the additional impedance into the circuit. Multiple rods lower the resistance, but the effectiveness diminishes with close separating distances. Multiple rods do not provide a total resistance of a single rod divided by the number of rods, unless the separations are several rod lengths apart. (See 4.1.4) This electrical separation of grounding electrodes without bonding all grounding electrodes together did not meet the NEC requirements. Figure 5-4 shows such a system. In some cases, instead of rods 3.05 m (10 ft) in length, multiple rods had been connected together, increasing the length to 6.10 m (20 ft), 9.14 m (30 ft), or more. The length that was used depended on the area of the country, the designer, and/or the contractor.

Copyright © 2007 IEEE. All rights reserved.

Authorized licensed use limited to: COLORADO SCHOOL OF MINES. Downloaded on October 04,2023 at 04:18:37 UTC from IEEE Xplore. Restrictions apply.

Affordable Wire Management, Exhibit No. EX1019
Case No. IPR2024-00182
Page 203 of 225

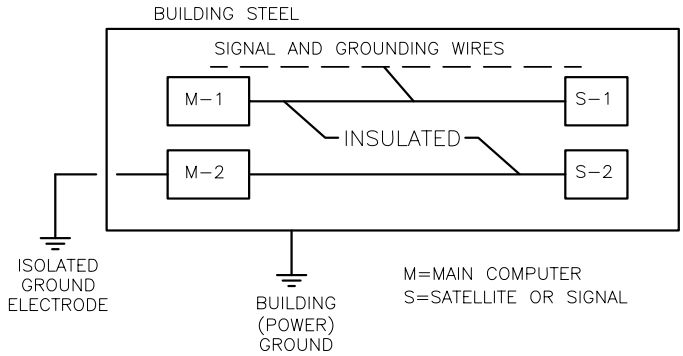

Figure 5-4—Isolated grounding of computers

5.5.3.2 Noise isolation

The isolated ground system reduced the noise, which had come from the power ground system via multiple grounding connections. In fact, it was called, in some parts of the world, a *quiet ground*. Since additional impedance had been introduced into the circuit, some noise was still picked up unless all interconnected electronic equipment was grounded to the same electrode group. Voltages can exist in the earth between electrodes even a meter apart; these voltages could be introduced into the different parts of an electronic equipment system connected to separate grounding electrodes.

5.5.3.3 Problems

While continuous low-level noise was eliminated by the isolated ground practice, a number of catastrophic incidents were encountered. Analysis of these indicated that the separation of grounds was responsible for very large voltages being impressed on electronic equipment components under thunderstorm conditions. These voltages occurred whether or not electronic equipment were in operation. Clearly some change would be necessary. The large voltages were due to lightning striking either the building housing the electronic equipment or the power system serving the building. There were other causes that were not so evident. When electrostatic charge centers on clouds were overhead, charges were induced in buildings on the ground beneath them.

Due to the resistance of the building grounding electrode, the voltage on the building was raised to a substantial level above that of the electronic equipment. The electronic equipment was held at the voltage of the separated, isolated electrode. This difference in voltage, and the capacitance between electronic equipment and building frame, induced voltages into the electronic equipment components that were above the breakdown voltages of the components. Many semiconductor components of electronic equipment

 Copyright © 2007 IEEE. All rights reserved.

Authorized licensed use limited to: COLORADO SCHOOL OF MINES. Downloaded on October 04,2023 at 04:18:37 UTC from IEEE Xplore. Restrictions apply.

will withstand only about 20 V or less even for as short a time as 1 µs. The described condition is illustrated in Figure 5-5.

The smaller interfering voltages injected into electronic equipment circuitry by voltages induced in buildings, due to charges centered in clouds overhead, even without strokes occurring, can cause similar problems. Such induced voltages can cause the absolute voltage of a building to be even a few hundreds of volts different from a grounding system located approximately a meter from the building. These voltages are sporadic and transient and can feed transient impulses into the electronic equipment circuitry, interfering with the desired operation or even causing failure of components.

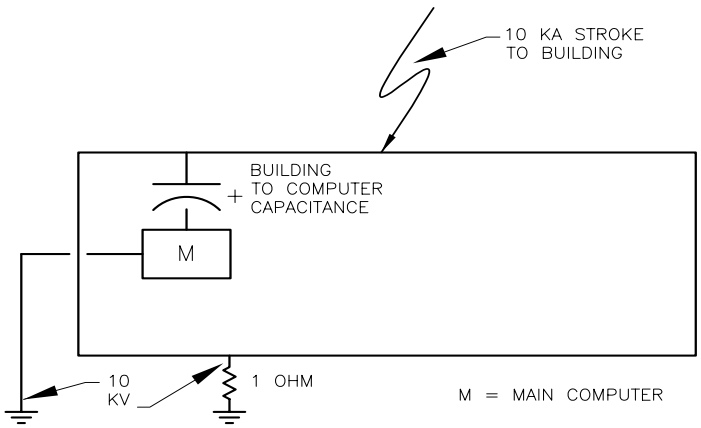

Figure 5-5—Effects of stroke to building with isolated grounding electrode (not recommended)

5.5.3.4 Remote equipment

Where remote (or peripheral) electronic equipment units or components are grounded to an isolated grounding electrode at their location, separate from the main building, substantial voltage differences can develop between the remote and main semiconductor devices and destroy them. Figure 5-6 illustrates this. An isolated repeater usually used with telephone systems, called a *modem,* is required to prevent this overvoltage. The modem will make the interconnecting signal wire the equivalent of a telephone circuit. (The word *modem* is a contraction of modulator-demodulator, which is the hardware that connects the data terminal to a communication line.)

Copyright © 2007 IEEE. All rights reserved.

Authorized licensed use limited to: COLORADO SCHOOL OF MINES. Downloaded on October 04,2023 at 04:18:37 UTC from IEEE Xplore. Restrictions apply.

Affordable Wire Management, Exhibit No. EX1019
Case No. IPR2024-00182
Page 205 of 225

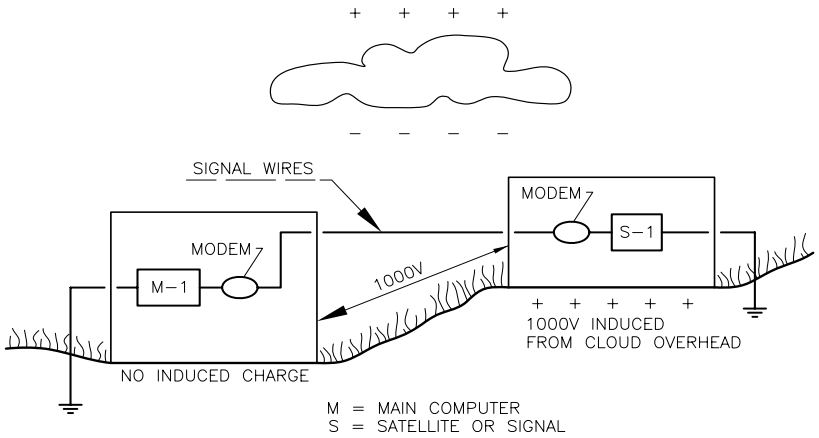

Figure 5-6—Remote equipment unit under a cloud-charge center

5.5.3.5 NEC non-adherence

The NEC requires that all equipment served from an electrical source be grounded or bonded to the grounding point of that source. Clearly, when an isolated grounding electrode is used for electronic equipment, this violates the NEC requirements. The NEC requires a metallic path from all equipment frames served, back to the source neutral-ground bonding point. If the path has a low impedance, any fault will be of sufficient magnitude to quickly operate the protective device and de-energize the faulted unit.

The induced voltage buildup problem shown in Figure 5-6 was recognized as a major problem. The natural tendency to prevent voltage buildup may be to install a separate grounding electrode at the remote location and bond the enclosure to the electrode as shown in Figure 5-7. This isolated ground installation, however, creates serious problems when a ground fault occurs in the computer enclosure. With separate isolated ground electrodes, a fault in the electronic equipment requires fault current to pass through the resistance of both the isolated electrode and that of the source building ground, in series. Where the isolated ground electrode resistance is 20 ohm and the building resistance is 20 ohm, a 120 V component fault would cause a current of 120 V/40 ohm or 3 A. This amount of current certainly would be insufficient to operate even a 15 A protective device. Figure 5-7 illustrates this condition. The fault would cause a substantial potential difference between the electronic equipment frame and adjacent building metal parts, representing a shock hazard to personnel. Clearly, the example in Figure 5-7 is not an accepted practice in the NEC.

 Copyright © 2007 IEEE. All rights reserved.

Authorized licensed use limited to: COLORADO SCHOOL OF MINES. Downloaded on October 04,2023 at 04:18:37 UTC from IEEE Xplore. Restrictions apply.

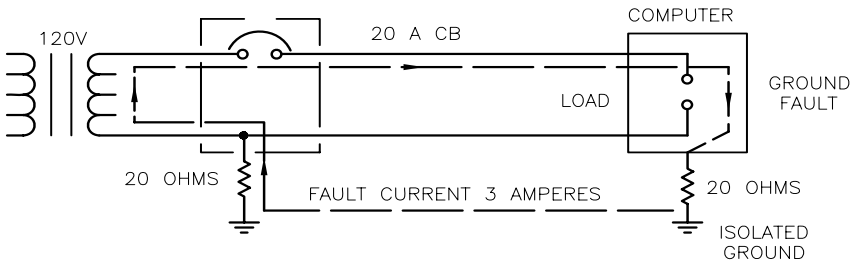

Figure 5-7—Unsafe isolated ground on electronic equipment

In general, the NEC requires that all equipment served from an electrical source be grounded or bonded to the grounding point of that source. However, there are recognized cases where this practice is not practicable, such as: objectionable current over grounding conductors, ac systems not required to be grounded, circuits not required to be grounded, two or more buildings supplied from a common service, and isolated receptacles. Refer to Figure 5-8 for a grounding system that is commonly used for computer systems that does comply with the NEC requirement. An isolation transformer, creating a separately derived system, is often used for computer applications. See also IEEE Std 1100 *(IEEE Emerald Book)*.

5.5.4 Single-point grounding system

To eliminate undesirable aspects of previous systems of grounding electronic equipment and similar sensitive electronic systems, the single-point grounding system has been developed and is the recommended method of grounding sensitive electronic equipment. This overcomes the problems and NEC violations created by multiple grounding electrode installations by grounding all electronic equipment system components to only one single point on the power grounding system. All other interconnected electronic equipment must be grounded to the same single point on the power grounding system or isolation of the interconnecting signal/data cables must be accomplished using fiber-optic cables, optical isolators, modems, or other means. Surge protection should also be applied on both ends of cables installed between buildings. It also overcomes the capacitive induced voltages between building and electronic equipment due to separate grounding, by bonding electronic equipment and the building power system to the same grounding electrode system. See Figure 5-8 for illustration.

When the electronic equipment grounding electrode and the electrical power system grounding electrode are connected together, a transient voltage rise applied to the building steel will result in the entire electronic equipment system rising and falling with the building steel. No overvoltage will be induced into the electronic equipment circuits.

Copyright © 2007 IEEE. All rights reserved.

Authorized licensed use limited to: COLORADO SCHOOL OF MINES. Downloaded on October 04,2023 at 04:18:37 UTC from IEEE Xplore. Restrictions apply.

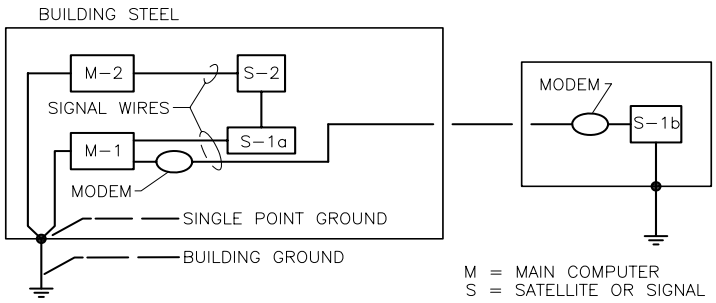

Figure 5-8—Zero noise pickup from single-point grounding of two-computer systems

5.5.5 Signal reference grids

Where there are several pieces of interconnected electronic equipment in a given area, such as a computer room, they can be grounded to a common ground reference using the EGCs supplemented by a signal reference grid, as shown in part a) of Figure 5-9. They can all conveniently receive their power from a single source, preferably via a local isolation transformer that can be grounded within or at the boundary of the room. This will also serve as the grounding point for all of the electronic equipment in that room.

To ensure a low impedance reference over a broad spectrum of frequencies, the single-point grounding conductors can be supplemented by the installation of a signal reference grid under the entire room. The grid will normally consist of conductors in a mesh configuration. All equipment cabinets can be bonded to the grid using short, flat conductors as illustrated in part b) of Figure 5-9. The combination of the single-point grounding conductors and the connections to the signal reference grid creates a low impedance reference for the electronic equipment over a frequency spectrum from dc to several megahertz as shown in part c) of Figure 5-9. Further information on signal reference grids can be found in the IEEE Std 1100 *(IEEE Emerald Book).*

5.5.6 Local area networks

The manufacturers of sensitive electronic equipment recognized the problem of grounding. With advancements in the internal design of electronic equipment and the development of local area networks (LANs), the need to be concerned with proper grounding has been reduced. In many LANs systems, the signal wire shield is not connected to the chassis ground but has a common ground. Each electronic equipment is plugged into the nearest electrical power receptacle. This design change appears to have reduced the problem; however, there is still the possibility of signal line shield-to-chassis voltage potential during severe ground-fault conditions.

 Copyright © 2007 IEEE. All rights reserved.

Authorized licensed use limited to: COLORADO SCHOOL OF MINES. Downloaded on October 04,2023 at 04:18:37 UTC from IEEE Xplore. Restrictions apply.

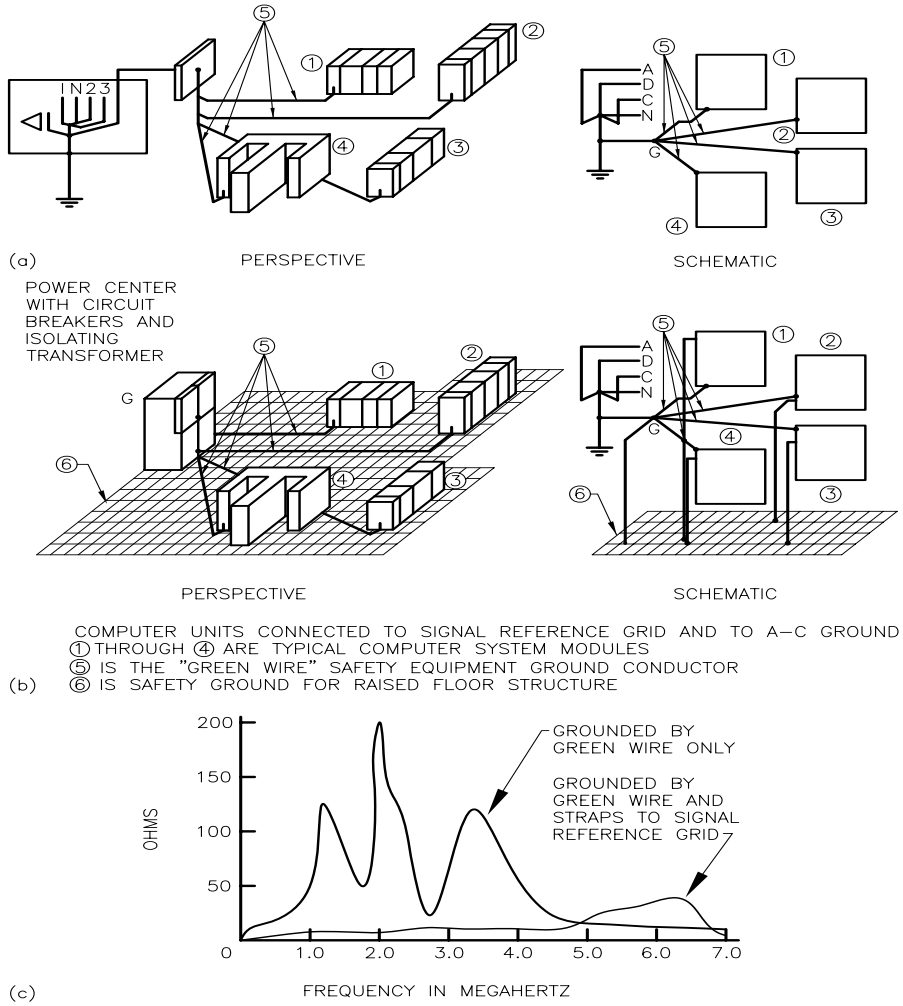

Figure 5-9—Signal reference grids reduce resonances: (a) computer conductors subject to high-frequency resonance with RF signals, (b) computer units connected to signal reference ground and ac power source ground, (c) resonance of power equipment ground conductors in typical site

Copyright © 2007 IEEE. All rights reserved.

Authorized licensed use limited to: COLORADO SCHOOL OF MINES. Downloaded on October 04,2023 at 04:18:37 UTC from IEEE Xplore. Restrictions apply.
Affordable Wire Management, Exhibit No. EX1019
Case No. IPR2024-00182
Page 209 of 225

5.5.7 Optical fibers

In place of the modem in data lines between buildings, per Figure 5-8, isolation can be obtained by the use of optical fiber lines rather than electric conductors. Some electronic equipment manufacturers even provide optical link isolation in input-output terminating lines for this purpose. For entire data lines of optical fiber, it is possible that *repeaters* or amplifiers will be required. Bear in mind that there are two types of optical systems: long lines, such as those the telephone companies use for long distance transmission; and short lines, which are used for internal building communications and isolation of electrical systems. Each type, long or short, is constructed differently, since each has different applications. Specialists in optical fiber systems should be consulted for correct and efficient design. Grounding and installation requirements for optical fibers are covered in the NEC.

5.6 Effects of internal rectifiers in computers

Most electronic equipment, internally, operate on dc obtained from 50 Hz to 60 Hz ac via rectifiers and filters. The filters, necessary to convert the rectified ac to reasonably pure dc, employ large capacitors and reactors or resistors. The capacitor draws current through the rectifier (and the ac line) only when the rectifier output voltage is above the dc voltage of the capacitor input to the filter. This is for the short period preceding the peak voltage as shown in Figure 5-10. This is a peak current well above the 60 Hz sinusoidal current of the electronic equipment power supply, and it increases the rms value.

The current pulses in each phase are well above the 50 Hz to 60 Hz sinusoidal currents and result in a disproportionate increase in the rms current or equivalent heating effect. Due to this high-frequency component, the current increase will not register on 50 Hz to 60 Hz meters. Consequently, the supply conductors may frequently need to be oversized by about one-third even though the current read by 50 Hz to 60 Hz average responding ammeters will not indicate it. This need for larger line conductors than would normally be required also means that the bus bars in panels and the supply transformers may have to be oversized. (See Figure 5-11.)

This pulsating current is similar to single-phase unbalanced load current. Each pulse when it occurs is a single-phase pulse and is not balanced by the other phases as with three-phase sinusoidal currents offset by 120°. Consequently, all pulses are line-to-neutral. The peak currents are high enough that the cumulative rms and heating effect of the neutral current may exceed the rms of the line current. Consequently, common neutrals should not be run, and each phase should be equipped with its own neutral.

As previously stated, this means that the devices, conductors, and bus bars between the transformer and the start of the single-phase loads will have to be evaluated for overheating.

 Copyright © 2007 IEEE. All rights reserved.

Authorized licensed use limited to: COLORADO SCHOOL OF MINES. Downloaded on October 04,2023 at 04:18:37 UTC from IEEE Xplore. Restrictions apply.

Affordable Wire Management, Exhibit No. EX1019
Case No. IPR2024-00182
Page 210 of 225

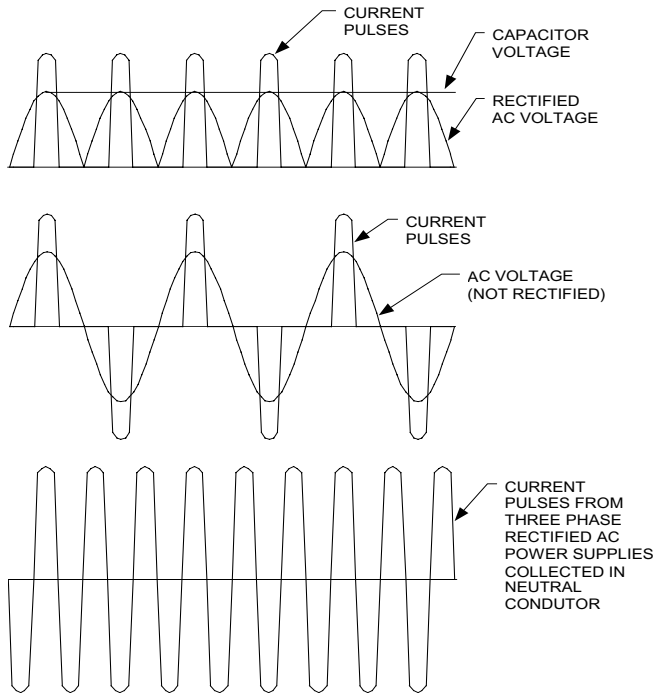

Figure 5-10—Rectifier circuit effect on ac current

The distribution and grounding system illustrated in Figure 5-11 complies with all the requirements of the NEC as well as maintains the isolation and noise rejection required for the electronic equipment system. This type of installation is recommended to minimize the numerous incorrect methods of isolated ground installations that violate the safety requirements of the NEC and create hazards to personnel and equipment.

5.7 Grounding of shields

When rigid metal conduit was used for signal conductors, the metal conduit acted as an overall shield. This overall shield was grounded in multiple locations whenever the metal conduit was fastened to building steel. With the advent of cable tray and other wireway methods, the overall shield has disappeared. Thus, one must consider the need to specify signal conductors with individual shielding and an overall shield when metal conduit is not used. This overall shield will act as the metal conduit shield. The overall shield is grounded whenever and wherever possible for low-frequency applications. The individual shields are grounded according to the applied frequency: low frequency at one end and high frequency at multiple points.

Copyright © 2007 IEEE. All rights reserved.

Authorized licensed use limited to: COLORADO SCHOOL OF MINES. Downloaded on October 04,2023 at 04:18:37 UTC from IEEE Xplore. Restrictions apply.

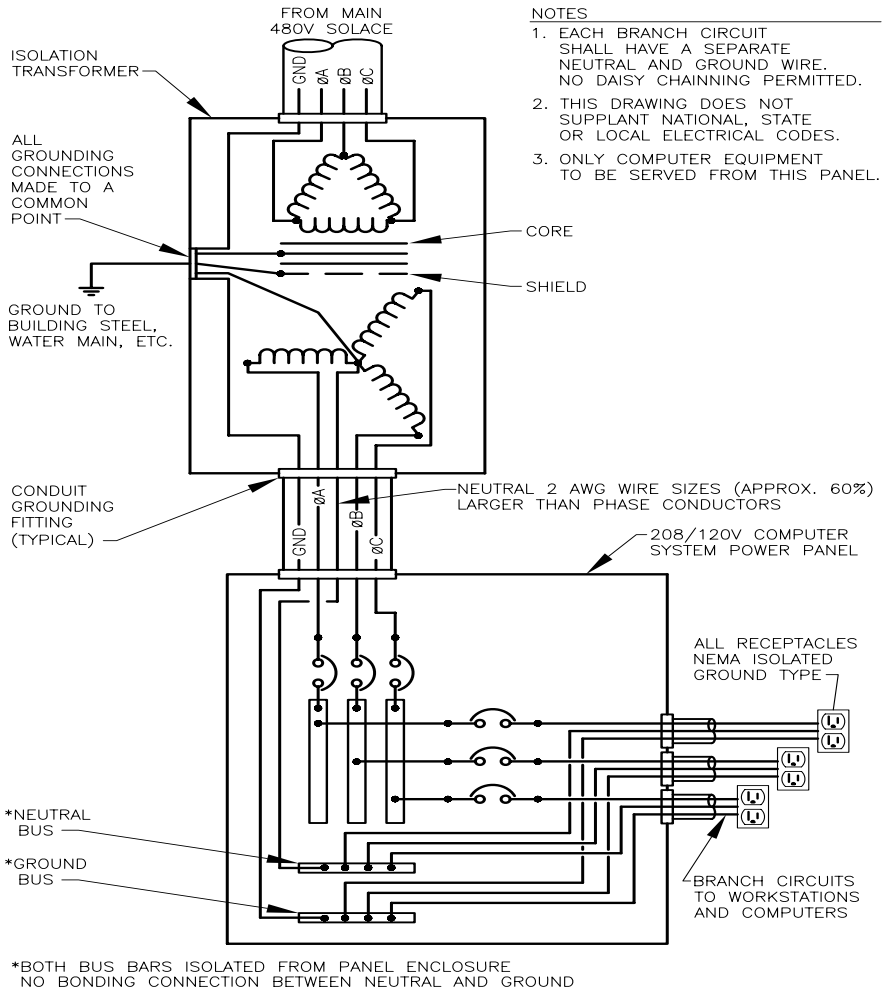

Figure 5-11—Recommended power distribution—computer system

 Copyright © 2007 IEEE. All rights reserved.

Authorized licensed use limited to: COLORADO SCHOOL OF MINES. Downloaded on October 04,2023 at 04:18:37 UTC from IEEE Xplore. Restrictions apply.

Affordable Wire Management, Exhibit No. EX1019
Case No. IPR2024-00182
Page 212 of 225

Where it is determined that it is desirable to protect signal conductors from high magnetic fields associated with lightning strokes, it is necessary to have ferric conduit thick enough to absorb the magnetic flux. Non-ferric raceways will not protect signal conductors from the magnetic field generated by a lightning stroke's high current discharge.

5.7.1 Description/need

Electrostatic induction into wires carrying low signal voltages has been found to be largely eliminated by installing electrostatic shields around wires. These shields may be the following:

a) Braided copper wire
b) Metallized foil, with a copper drain wire
c) Metal conduit (if steel conduit, this also serves as a magnetic shield)
d) Other shielding methods

To be effective, shields must divert the interference away from the conductors/circuit to be shielded. Since the vast majority of interference sources are referenced to ground, the shield is grounded to divert the interference back to the source, via the grounding system. For signal frequencies of up to about 1 MHz, it is good practice to ground a shield at only one end, preferably at the source of the signal end, leaving the load end insulated from ground. This is to prevent the shield from acting as a conductor for voltage differences at the two ends. This voltage difference may exist between the two different locations on the building steel. When there is current carried in the shield, voltage from this current is injected into the signal voltage. This is especially applicable where the signal voltage is between the enclosed conductor and the shield. Where the interfering voltage is low frequency (60 Hz) and the signal is a higher frequency, the insulated end of the shield can be shorted for signal frequency by a suitably sized capacitor. This results in high impedance to the interfering frequency but low impedance to the signal frequency.

As the signal frequency increases above about 1 MHz, it becomes necessary to ground the shield at both ends and possibly even at multiple points between ends. It becomes important that the ground wires be very short; thus, they would be connected to building steel rather than to a circuit grounding point some distance away. A grounding lead develops an impedance proportional to frequency and length. A grounding conductor longer than 1/20, or 5%, of the wavelength of the interfering frequency will not properly serve its purpose. Wavelength in meters is 300 divided by the frequency in MHz, as shown in Equation (5.1):

$$l = \frac{300 \times 10^6}{f} \tag{5.1}$$

where

l = wavelength (meters per cycle)
f = frequency (cycles per second)
300×10^6 = constant, velocity of an electromagnetic wave in free space (meters per second)

Copyright © 2007 IEEE. All rights reserved.

Authorized licensed use limited to: COLORADO SCHOOL OF MINES. Downloaded on October 04,2023 at 04:18:37 UTC from IEEE Xplore. Restrictions apply.

The speed of an electromagnetic wave in a vacuum is 300 000 km per second (186 000 mi per second). The speed is lower in a conductor. A voltage wave will travel approximately 30 m (100 ft) in free space during one cycle of a 10 MHz pulse. In a grounding conductor, the wave may travel only 28 m (92 ft) in 1/10 ms. If the conductor is 28 m (92 ft) long, the wave will be reflected back and arrive at the beginning at the same time that a new pulse begins. Resonance will occur and line oscillations will be greatly magnified.

The peak will occur at 1/4 wavelengths, or in the example of a 28 m (92 ft) long conductor, at 7 m (23 ft) locations. Good engineering practice decrees that a conductor any longer than 1/20 of a wavelength cannot equalize voltages between its ends (see FIPS Pub 94).

Thus for an interfering frequency of 10 MHz and a propagation velocity of 89.4% of the velocity in free space, the length may not exceed 1/20, or 5%, in 1/10 µs, as shown in Equation (5.2):

$$l_{max} = \frac{0.05\% \times 268.2 \times 10^6}{10 \times 10^6 \text{ MHz}} = 1.341 \text{ m (4.3 ft)} \tag{5.2}$$

Higher interfering frequencies would require proportionately shorter (inversely) grounding wire lengths, or the shields will be less effective.

5.7.2 Overvoltage at open points

At ungrounded ends of shields, some voltage may develop between shield and ground. The shield must be insulated to prevent hazardous personnel exposure. Also, shields must be insulated over their entire length to prevent multiple grounding to points that may be at voltages different from that of the shield and that could inject voltages into the shield.

To terminate the shield, it will be necessary to remove the end of the jacket to reach the shield and open its continuity. The end then must be insulated to prevent possible personnel shock. If shielding must be continued beyond this point, shielding, such as flexible copper-shield braid or expanded shield tubing, needs to be overlapped at the insulated end of the signal shield, spliced to the shield of the continuing length, and grounded at the load end and grounding terminal.

5.8 Interference from radio frequencies

Problems from resonance at high frequencies due to the length of the grounding conductor from the electronic equipment units to the grounding point can be largely eliminated by installation of a signal reference grid in the raised floor of the electronic equipment room. For each group of electronic equipment, a grid network of copper wires in the raised floor, with tie straps from each electronic equipment unit to the grid and one from the grid to the room grounding point, will largely negate this resonance effect. Figure 5-9 illustrates this

 Copyright © 2007 IEEE. All rights reserved.

Authorized licensed use limited to: COLORADO SCHOOL OF MINES. Downloaded on October 04,2023 at 04:18:37 UTC from IEEE Xplore. Restrictions apply.

principle, showing a group without the grid (part a) and the same group with the grid [part b)]. A comparison of the performance of the two is shown in part c).

5.9 Case histories

5.9.1 Corporate headquarters office building current flow over ground

An office building contained a 1500 kVA lighting transformer in the basement. The electronic equipment room was located next to the transformer room. The 208Y/120 V system had many neutral-to-ground connections, which offered a parallel path for the return current over building steel, piping, etc.

Malfunction of the electronic equipment occurred whenever a large load was switched. The total load on the transformer was approximately 1200 A. The amount of neutral current returning over the ground ranged from 40 A to 60 A.

The multiple electronic equipment connections to ground were combined into a single-point connection. Due to the many neutral-to-ground faults, mainly in the lighting fixtures, no attempt was made to correct the situation because of the cost. However, all new construction was checked for neutral-to-ground faults, and the contractor was responsible for finding and making the corrections. In new construction, a typical 42-pole lighting panel was found to contain 20% of the branch circuits faulted with neutral-to-ground faults.

The method for finding neutral-to-ground faults is given in Zipse.

5.9.2 Corporate headquarters office building ground connection

Several large-scale units of electronic equipment in a large corporation headquarters office complex on the 10th floor were each grounded by a grounding conductor in the power-supply cable to the source transformer ground to building steel. The power-supply cable furnished with each piece of electronic equipment was a plastic-jacketed type, about 3 m (9 ft) long, terminating in a multi-conductor plug, with the ground conductor attached to the metal shell of the plug. The user supplied the mating receptacle and cable from the receptacle to the source. This cable was not jacketed but had the ground conductor attached to the cable metal armor.

It was found that separating the cable armor from contact with either the armor of the other cables or (grounded) metal supports for the raised floor reduced the continuous noise level by 90%. Consequently, insulating jackets were applied to the power cables to eliminate the noise interference between separate grounds of the grounding conductors. This also showed that noise was being generated in each piece of electronic equipment and that the connection with other electronic equipment would introduce noise into all these systems.

Copyright © 2007 IEEE. All rights reserved.

Authorized licensed use limited to: COLORADO SCHOOL OF MINES. Downloaded on October 04,2023 at 04:18:37 UTC from IEEE Xplore. Restrictions apply.

5.9.3 U. S. Army facilities plant

Electronic equipment in a small control building served a number of nearby production facilities. This equipment had an isolated ground of 28 ohm resistance to earth and 0.7 ohm resistance separate from the building's power ground system. The equipment's power supply was from the plant's power system, stabilized by static regulating transformers. In an electrical storm, a pole bearing the transformer servicing the control building, located 91 m (300 ft) from it, was struck by lightning. The electronic equipment was not in operation, and the main power switches were open. However, the electronic equipment sustained failure of about one-third of the semiconductor devices in its system. It was apparent that overvoltages did not enter the electronic equipment through the power system. The surge arresters on the normal power lines entering the building raised the building-frame voltage substantially. The electronic equipment was held by its isolated ground to a lower voltage than that of the building. The capacitance between the electronic equipment and the building allowed voltage to be introduced between the two, placing overvoltage on components and causing failure of many of them. Consequently, the owners interconnected the electronic equipment ground conductor with the building's power-system ground. There has been no subsequent malfunction due to lightning.

A second production group at the same site was grounded, at a single point, with the building grounding electrode. There were ten units of electronic equipment in this group, interconnected with four remote production buildings. All of these remote terminals were grounded to the central control electronic equipment units, which were each connected to a heavy ground bus. From that point, a heavy conductor was run to the grounding loop around the building. This loop had a grounding electrode of less than 1 ohm resistance. Trouble-free operation, even though the area where the building was located had a high incidence of lightning, resulted.

5.9.4 Restaurant computer system

A point-of-sale electronic equipment system consisting of a central processing unit (CPU) with disk drives and seven remote devices (five terminals and two printers) was installed in a restaurant. The insulated grounds on the branch circuits were connected to isolated ground rods and isolated water pipes. The system was malfunctioning daily.

Shielded, isolated transformers were installed at the CPU and all remote devices. The isolated grounds were bonded to the equipment ground terminals at the subpanels, and all connections to the ground rods and water pipes were removed. Following these changes, the system has operated reliably for over 2 years.

5.9.5 High-rise office building

An electronic equipment system consisting of two CPUs, disk drives, tape drives, and several peripherals was installed in an upper floor of a high-rise office building. The power source for the system was a 112.5 kVA transformer located in the electrical room on that floor. The insulated ground from the electronic equipment room panel was installed with the feeder conductors back to the electrical room, where it was terminated at the 500 kcmil copper riser for the building.

 Copyright © 2007 IEEE. All rights reserved.

Authorized licensed use limited to: COLORADO SCHOOL OF MINES. Downloaded on October 04,2023 at 04:18:37 UTC from IEEE Xplore. Restrictions apply.

Both CPUs were experiencing a high incidence of hang-ups, after which the system would have to be powered down and restarted. This resulted in the loss of all data.

The connection to the 500 kcmil building ground was removed, and the grounding connection made, with the feeder conductors, to the X_0 neutral-ground bond of the 112.5 kVA transformer. After this change, the system operated for several months without a single incident of CPU hang-up.

5.9.6 Separate buildings/single ground

Four separate but nearby structures were the control buildings for a series of chemical processes. Each building housed electronic equipment for process control. There were some interconnections between data circuits of the electronic equipment and adjoining buildings. Each of the units of four electronic equipment was separately grounded to the structural steel (power) grounding system of its building. Operation of the electronic equipment system was completely erratic.

One of the plant engineers suggested that the grounding systems of the four units of electronic equipment be connected together and grounded at only one point: at one of the two center buildings. Erratic operation ceased at once. The NEC was being violated, even though there was a metallic ground-fault return system through the overall plant inter-building bonding system, but of higher impedance. This solution provided a common reference for all of the equipment and prevented circulating currents through the data circuits. An alternative, in compliance with the NEC, might be to retain the separate grounding in each building but provide electrical isolation of the data circuits.

Interconnection of the electronic equipment units made the four systems a single system, so grounding at four points induced ground-current loops. In addition, at this plant, like all others of that company, all the building frames were interconnected to a single ground system, making them the same as a single building steel combination. Therefore, connection to all four would be the same as grounding a system at four points on the same building. Such common grounding can be the result of a metallic water system, shield of ground wires of electric cables, process piping, etc. These can inject such problems into many electronic equipment system grounding schemes.

5.10 Normative references

The following referenced documents are indispensable for the application of this document (i.e., they must be understood and used, so each referenced document is cited in the text and its relationship to this document is explained). For dated references, only the edition cited applies. For undated references, the latest edition of the referenced document (including any amendments or corrigenda) applies.

Accredited Standards Committee C2, National Electrical Safety Code® (NESC®).[4]

[4]The NESC is available from the Institute of Electrical and Electronics Engineers, 445 Hoes Lane, P.O. Box 1331, Piscataway, NJ 08855-1331, USA (http://standards.ieee.org/).

Copyright © 2007 IEEE. All rights reserved.

Authorized licensed use limited to: COLORADO SCHOOL OF MINES. Downloaded on October 04,2023 at 04:18:37 UTC from IEEE Xplore. Restrictions apply.

FIPS Pub 94, Guideline on Electrical Power for ADP Installations.[5]

Fagan, E. J., and Lee, R. H., "The Use of Concrete-enclosed Reinforcing Rods as Grounding Electrodes," *IEEE Industry and General Applications* (Now *IEEE Transactions on Industry Applications),* vol. IGA-6, no. 4, July/August 1970, pp 337–347.

IEEE Std 1100, IEEE Recommended Practice for Powering and Grounding Electronic Equipment *(IEEE Emerald Book)*.[6, 7]

Kaufmann, R. H., "Some Fundamentals of Equipment Grounding Circuit Design," *IEEE IGA,* vol. 73, part 2, November 1954.

NFPA 70, National Electrical Code® (NEC®).[8]

West, R. B., "Equipment Grounding for Reliable Ground Fault Protection in Electrical Systems below 600 Volts," *IEEE Transactions on Industry Applications,* vol. IA-10, no. 2, March/April 1974, pp 175–189.

Zipse, D. W., "Multiple Neutral-to-Ground Connections," *IEEE I&CPS Technical Conference,* May 1972, pp. 60–64.

5.11 Bibliography

[B1] Buschart, R. J., "Computer Grounding and the National Electrical Code," *IEEE Transactions on Industry Applications,* vol. IA-23, no. 3, May/June 1987, pp. 404–407.

[B2] "Grounding for Process Control Computers and Distributed Control Systems: The National Electrical Code and Present Grounding Practice," *IEEE Transactions on Industry Applications,* vol. IA-23, no. 3, May/June 1987, pp. 417–423.

[B3] IEEE 100, *The Authoritative Dictionary of IEEE Standards Terms,* Seventh Edition. New York: Institute of Electrical and Electronics Engineers, Inc.

[B4] Lee, R. H., "Grounding of Computers and Other Similar Sensitive Equipment," *IEEE Transactions on Industry Applications,* vol. IA-23, no. 3, May/June 1987, pp. 408–411.

---

[5] FIPS Pub 94 has been withdrawn; however, copies can be obtained from Global Engineering, 15 Inverness Way East, Englewood, CO 80112-5704, USA, tel. (303) 792-2181 (http://global.ihs.com/).

[6]IEEE publications are available from the Institute of Electrical and Electronics Engineers, 445 Hoes Lane, P.O. Box 1331, Piscataway, NJ 08855-1331, USA (http://standards.ieee.org/).

[7]The IEEE standards or products referred to in this clause are trademarks of the Institute of Electrical and Electronics Engineers, Inc.

[8]The NEC is published by the National Fire Protection Association, Batterymarch Park, Quincy, MA 02269, USA (http://www.nfpa.org/). Copies are also available from the Institute of Electrical and Electronics Engineers, 445 Hoes Lane, P.O. Box 1331, Piscataway, NJ 08855-1331, USA (http://standards.ieee.org/).

 Copyright © 2007 IEEE. All rights reserved.

Authorized licensed use limited to: COLORADO SCHOOL OF MINES. Downloaded on October 04,2023 at 04:18:37 UTC from IEEE Xplore. Restrictions apply.

[B5] Lewis, W. H., "Recommended Power and Signal Grounding for Control and Electronic Equipment Rooms," *IEEE Transactions on Industry Applications,* vol. IA-21, no. 6, November/December 1985, p. 1503.

[B6] Lewis, W. H., "The Use and Abuse of Insulated/isolated Grounding," *IEEE Transactions on Industry Applications,* vol. IA-25, no. 6, November/December 1989, p. 1093.

[B7] Maggioli, V. M., "Grounding and Computer Technology," *IEEE Transactions on Industry Applications,* vol. IA-23, no. 3, May/June 1987, pp. 412–417.

Copyright © 2007 IEEE. All rights reserved.

Authorized licensed use limited to: COLORADO SCHOOL OF MINES. Downloaded on October 04,2023 at 04:18:37 UTC from IEEE Xplore. Restrictions apply.

 Copyright © 2007 IEEE. All rights reserved.

Authorized licensed use limited to: COLORADO SCHOOL OF MINES. Downloaded on October 04,2023 at 04:18:37 UTC from IEEE Xplore. Restrictions apply.

Affordable Wire Management, Exhibit No. EX1019
Case No. IPR2024-00182
Page 220 of 225

Index

A

Automatic interrupting devices, 106
Autotransformers, 48–53

C

Cabling of conductors, 83
Calculation of resistance to earth, 164–168
Charge density meter, 127
Charge transfer system, 148
Circuit impedance, 88
Circulating harmonic current, 42
Common-mode noise, avoiding, 62–63
Common-mode signal, 62
Common-mode voltage, 62
Conductive floors, 131
Conductive footwear and casters, 131
Conductor cabling, 83
Corner-of-the-delta grounded systems, 26
Critical radius, 150
Current-loading capacity, 168

D

DC surge arresters, 70
Delta system grounded at midpoint, 26
Delta-wye transformer, 29
Direct lightning protection, 149–152

E

Early emission ionizing streamer, 148
Effectively grounded, definition of, 2
EGC, definition of, 2
Electrical grounding and corrosion, 178–181
Electrochemical systems, 67
Electromagnetic interference suppression, 89
Electrometer amplifier, 126
Electronic equipment
- definition of, 187
- general, 187

Electrostatic voltmeter, 126
Equipment grounding, 190
- basic objectives, 75
- case histories, 205
  - Army facilities plant, 206
  - corporate headquarters, 205
  - high-rise office building, 206
  - restaurant computer system, 206
  - separate buildings/single ground, 207
- classes of use, 95
- conductor sizing, 107
- electric-shock exposure, 76
- general, 75
- ground fault detection, 108
- installations serving heavy machinery, 100–104
- insulated grounding conductors, 192
- local area networks, 198
- modem, 195
- NEC non-adherence, 196
- NEC requirements, 75
- noise isolation, 194
- optical fibers, 200
- overcurrent protection, 77
- power ground, 191
- problems, 194
- quiet ground, 194
- remote equipment, 195
- repeaters, 200
- safety ground, 191
- separate/isolated grounds, 193
- service equipment, 104
- signal ground, 191
- signal reference grids, 198
- single-point connection, 191
- single-point system, 197
- substations, 99
- switching centers, 110
- thermal capability, 76
- thermal withstand, 105
- transformation unit substations, 110
- utilization equipment, 111

Copyright © 2007 IEEE. All rights reserved.

Authorized licensed use limited to: COLORADO SCHOOL OF MINES. Downloaded on October 04,2023 at 04:18:37 UTC from IEEE Xplore. Restrictions apply.

Affordable Wire Management, Exhibit No. EX1019
Case No. IPR2024-00182
Page 221 of 225

Equipment grounding conductor (EGC), 75
definition of, 2
minimum size, 107
sizing, 107

F

Ferroresonance, 65
Field mill, 126
Fortress concept, 148
Franklin air terminals, 148
Frictional electricity, 122

G

Generating voltmeter, 126
Generators
industrial and commercial, 38
paralleled, 41
paralleled with other sources, 46–48
single unparalleled, 40
unparalleled alternate sources, 44
Ground electrodes
concrete encased, 171–172
driven, 170
existing, 170
other types, 172
substation, 173
transferred earth potentials, 173
Ground rods, 174
connecting to electrodes, 175
joining to structural steel, 176
joining to underground piping systems, 176
methods of driving, 174
preparing the joint, 176
Ground vs. earth, 93
Ground, definition of, 2
Grounded system, definition of, 2
Grounded, definition of, 2
Ground-fault limitations, 43
Ground-fault neutralizer, 17
Ground-fault neutralizer grounding, 5
Ground-fault sensing, 108
Grounding
ac safety (mains) grounds, 191
computer reference ground, 191
dc ground bus, 191
dc master ground point, 191
dc power supply reference ground bus, 190
dc power systems, 66–70
dc surge arresters, 70
electrochemical, 67
NEC requirements, 66
solar photovoltaic, 67
station battery systems, 66
stray currents, 69
transit power, 67
dc signal common, 191
earth common, 191
electrical noise, 189
equipment ground bus, 190
high-resistance, 11
industrial and commercial generators, 38–48
low-resistance, 13
methods, 20
other than system neutral, 25
power supply common ground point, 191
reactance, 15
resonant, 17
satisfying Code requirements, 188
signal common, 190
solid, 17
Grounding and grounded conductors, distinction between, 111
Grounding conductor
bonding of metal sleeves, 89
enclosing metal shell, 83–88
single wire, 77–83
Grounding connections
to earth, 93
voltage protection equipment, 90
Grounding decisions, 1–2
Grounding locations
specified by NEC, 37
Grounding resistance
calculation of, 164–168
current-loading capacity, 168
nature of, 161–163
Recommended acceptable values, 163
resistivity of soils, 164
soil treatment, 169
Grounding system, definition of, 3

 Copyright © 2007 IEEE. All rights reserved.

Authorized licensed use limited to: COLORADO SCHOOL OF MINES. Downloaded on October 04,2023 at 04:18:37 UTC from IEEE Xplore. Restrictions apply.

Grounding transformers, 22

H

High-resistance grounded, definition of, 3
High-resistance grounding, 11–13

I

Impedance grounding, 5
Induced currents, 142
Induced stroke, 142
Insulated grounding conductors, 192
Interior electric circuits, 105
Interior wiring systems
    general, 104
Ionization, 130
Isolated equipment ground
    definition of, 188

K

Keraunic level, 143

L

Lightning
    induced currents, 142
    nature of, 140–145
    need for protection, 142
    NLDN, 144
Lightning protection
    charge transfer system, 148
    direct, 149
    early emission ionizing streamer, 148
    equipment and structures, 145
    Faraday cage, 148
    Franklin air terminals, 148
    general practices, 152
    high masts, 154
    laser, 149
    methods, 147
    nonconducting heavy-duty stacks, 153
    power stations and substations, 155
    principles, 146
    rocket, 149
    steeples, 154
    tanks and tank farms, 153
    zone of protection, 147
Local area networks, 198
Low-resistance grounded, definition of, 3
Low-resistance grounding, 13–15

M

Made electrodes, 170
Mining equipment supply systems, 57–60
Multiple power sources, 33–37

N

National Lightning Detection Network (NLDN), 144
Neon lamp tester, 126
Neutral
    definition of, 188
Noise, 62

O

Optical fibers, 200
Outdoor open-frame substations, 95–99
    control of surface voltage gradient, 98
    design of earthing connections, 97
    design of paths for power frequency, 96
    surge voltage protective equipment, 98
    voltage gradients, external, 98

P

Per-phase charging current (I_{co}), definition of, 3
Power source
    multiple, 33
    single, 33

R

Reactance grounded, definition of, 3
Reactance grounding, 5, 15–16
Resistance grounded, definition of, 3
Resistance grounding, 5, 10–15
    limiting current, 10
Resistance to earth, 176
    measurements, 178
    methods for measuring, 177
    periodic testing, 178
Resistivity of soils, 164
Resonant grounded, definition of, 3

Copyright © 2007 IEEE. All rights reserved.

Authorized licensed use limited to: COLORADO SCHOOL OF MINES. Downloaded on October 04,2023 at 04:18:37 UTC from IEEE Xplore. Restrictions apply.

Resonant grounding, 17
Resonantly produced voltages, 64–65

S

Separate/isolated grounds, 193
Separately derived system, definition of, 3
Service equipment, 104
Shield grounding
  description/need, 203
  overvoltage at open points, 204
Signal reference grids, 198
Single power source, 33
Single unparalleled generator, 40
Single-point connections, 191
Single-point grounding system, 197
Soil treatment, 169
Solar photovoltaic systems, 67
Solid grounding, 5, 17–20
Solidly grounded. definition of, 4
Solid-state electrometer, 126
Static charge, definition of, 4
Static electricity
  area in contact, 122
  atmospheric conditions, 123
  causes, 120
  causing ignition, 125
  conditions affecting, 122
  effect of motion between substances, 122
  electrometer amplifier, 126
  electrostatic voltmeter, 126
  generating voltmeter, 126
  hazard control, 132
    aviation industry, 132
    belted drives, 133
    coal industry, 134
    dry cleaning, 139
    electronic equipment, 140
    flour and grain industry, 134
    gas processing, 137
    hospitals, 138
    offices, 140
    paint industry, 137
    paper and printing industries, 137
    powder processing, 137
    refining industry, 137
    rubber industry, 138
    textile industry, 138
  magnitude, 123
  material characteristics, 122
  measurement and detection, 125
  methods of control, 127
    conductive floors, 131
    conductive footwear and casters, 131
    grounding and bonding, 128–129
    humidity, 129
    ionization, 130
    proper maintenance, 132
    special precautions, 131
  neon lamp tester, 126
  solid-state electrometer, 126
  speed of separation, 122
  theory of generation, 120
  voltages possible, 123
Static electricity detector, 127
Static grounding
  minimizing losses, 120
  purpose, 119
Static spark ignition, 125
Station battery systems, 66
Stray currents and potentials, 60–62
Stray currents in transit power systems, 69
Substation grounding, 173
Switching centers, 110
Switching surge, definition of, 4
System charging current, definition of, 4
System grounding, 190
  general, 75
  neutral, 5
    impedance grounding, 5
    solid grounding, 5
  purposes, 4
System grounding points
  selection, 28
  transformer configurations, 28
System neutral, 22

T

Thermal withstand, 105
  automatic interrupting devices, 106
  insulation damage, 106
Third rail systems, 68

 Copyright © 2007 IEEE. All rights reserved.

Authorized licensed use limited to: COLORADO SCHOOL OF MINES. Downloaded on October 04,2023 at 04:18:37 UTC from IEEE Xplore. Restrictions apply.

Three-phase, three-wire system, definition of, 4
Transferred earth potentials, 173
    limiting, 63–64
Transformation unit substations, 110
Transformers
    delta-wye, 29
    grounding, 22
    wye-delta, 24
    wye-wye, 30
    zigzag, 22
Transient overvoltage, definition of, 4
Transit power systems, 67–69
Tuned, 17

U

Ufer ground, 170, 188
Ungrounded system, 5–10
    capacitance grounded, 5
Ungrounded system, definition of, 4
Uninterruptible power supplies (UPS), 53
UPS systems, 53–56
    nonseparately derived, 54
    separately derived, 54
        four-wire loads, 55

W

Wye-delta grounding transformers, 24
Wye-wye transformers, 30–32

Z

Zigzag grounding transformers, 22
Zone of protection, 147

Copyright © 2007 IEEE. All rights reserved.

Authorized licensed use limited to: COLORADO SCHOOL OF MINES. Downloaded on October 04,2023 at 04:18:37 UTC from IEEE Xplore. Restrictions apply.