IEEE Std 525™-2007
(Revision of
IEEE Std 525-1992/Incorporates
IEEE Std 525-2007/Cor1:2008)

IEEE Guide for the Design and Installation of Cable Systems in Substations

Sponsor

Substations Committee
of the
IEEE Power Engineering Society

Approved 8 March 2007

IEEE-SA Standards Board

Abstract: The design, installation, and protection of wire and cable systems in substations are covered in this guide, with the objective of minimizing cable failures and their consequences.

Keywords: acceptance testing, cable, cable installation, cable selection, communication cable, electrical segregation, fiber-optic cable, handling, power cable, pulling tension, raceway, recommended maintenance, routing, separation of redundant cable, service conditions, substation, transient protection

---

The Institute of Electrical and Electronics Engineers, Inc.
3 Park Avenue, New York, NY 10016-5997, USA

Copyright © 2008 by the Institute of Electrical and Electronics Engineers, Inc.
All rights reserved. Published 2 April 2008. Printed in the United States of America.
Figure J.1 was replaced as required by IEEE Std 525-2007/Cor1:2008.

IEEE is a registered trademark in the U.S. Patent & Trademark Office, owned by the Institute of Electrical and Electronics Engineers, Incorporated.

National Electrical Safety Code and NESC are registered trademarks in the U.S. Patent & Trademark Office, owned by The Institute of Electrical and Electronics Engineers, Incorporated.

National Electrical Code and NEC are registered trademarks in the U.S. Patent & Trademark Office, owned by The National Fire Protection Association.

PDF: ISBN 978-0-7381-5530-2 STD95629
Print: ISBN 978-0-7381-5529-6 STDPD95629

No part of this publication may be reproduced in any form, in an electronic retrieval system or otherwise, without the prior written permission of the publisher.

IEEE Standards documents are developed within the IEEE Societies and the Standards Coordinating Committees of the IEEE Standards Association (IEEE-SA) Standards Board. The IEEE develops its standards through a consensus development process, approved by the American National Standards Institute, which brings together volunteers representing varied viewpoints and interests to achieve the final product. Volunteers are not necessarily members of the Institute and serve without compensation. While the IEEE administers the process and establishes rules to promote fairness in the consensus development process, the IEEE does not independently evaluate, test, or verify the accuracy of any of the information or the soundness of any judgments contained in its standards.

Use of an IEEE Standard is wholly voluntary. The IEEE disclaims liability for any personal injury, property or other damage, of any nature whatsoever, whether special, indirect, consequential, or compensatory, directly or indirectly resulting from the publication, use of, or reliance upon this, or any other IEEE Standard document.

The IEEE does not warrant or represent the accuracy or content of the material contained herein, and expressly disclaims any express or implied warranty, including any implied warranty of merchantability or fitness for a specific purpose, or that the use of the material contained herein is free from patent infringement. IEEE Standards documents are supplied "**AS IS**."

The existence of an IEEE Standard does not imply that there are no other ways to produce, test, measure, purchase, market, or provide other goods and services related to the scope of the IEEE Standard. Furthermore, the viewpoint expressed at the time a standard is approved and issued is subject to change brought about through developments in the state of the art and comments received from users of the standard. Every IEEE Standard is subjected to review at least every five years for revision or reaffirmation. When a document is more than five years old and has not been reaffirmed, it is reasonable to conclude that its contents, although still of some value, do not wholly reflect the present state of the art. Users are cautioned to check to determine that they have the latest edition of any IEEE Standard.

In publishing and making this document available, the IEEE is not suggesting or rendering professional or other services for, or on behalf of, any person or entity. Nor is the IEEE undertaking to perform any duty owed by any other person or entity to another. Any person utilizing this, and any other IEEE Standards document, should rely upon his or her independent judgment in the exercise of reasonable care in any given circumstances or, as appropriate, seek the advice of a competent professional in determining the appropriateness of a given IEEE standard.

Interpretations: Occasionally questions may arise regarding the meaning of portions of standards as they relate to specific applications. When the need for interpretations is brought to the attention of IEEE, the Institute will initiate action to prepare appropriate responses. Since IEEE Standards represent a consensus of concerned interests, it is important to ensure that any interpretation has also received the concurrence of a balance of interests. For this reason, IEEE and the members of its societies and Standards Coordinating Committees are not able to provide an instant response to interpretation requests except in those cases where the matter has previously received formal consideration. A statement, written or oral, that is not processed in accordance with the IEEE-SA Standards Board Operations Manual shall not be considered the official position of IEEE or any of its committees and shall not be considered to be, nor be relied upon as, a formal interpretation of the IEEE. At lectures, symposia, seminars, or educational courses, an individual presenting information on IEEE standards shall make it clear that his or her views should be considered the personal views of that individual rather than the formal position, explanation, or interpretation of the IEEE.

Comments for revision of IEEE Standards are welcome from any interested party, regardless of membership affiliation with IEEE. Suggestions for changes in documents should be in the form of a proposed change of text, together with appropriate supporting comments. Comments on standards and requests for interpretations should be submitted to the following address:

Secretary, IEEE-SA Standards Board
445 Hoes Lane
Piscataway, NJ 08854
USA

Authorization to photocopy portions of any individual standard for internal or personal use is granted by The Institute of Electrical and Electronics Engineers, Inc., provided that the appropriate fee is paid to Copyright Clearance Center. To arrange for payment of licensing fee, please contact Copyright Clearance Center, Customer Service, 222 Rosewood Drive, Danvers, MA 01923 USA; +1 978 750 8400. Permission to photocopy portions of any individual standard for educational classroom use can also be obtained through the Copyright Clearance Center.

Introduction

This introduction is not part of IEEE Std 525-2007, IEEE Guide for the Design and Installation of Cable Systems in Substations.

This revision of the guide incorporates various changes in cable installation philosophies that have occurred since the 1992 version of the guide. Significant changes have been made in the following areas:

a) Re-ordered much of the common information for all cables into the annexes, and rearranged the clauses to align with specific information for each differing type of cable

b) Added a clause to cover communication cable

c) Expanded and updated the clause for fiber-optic cable

d) Arranged the annexes to better follow the flow of control cable systems selection and design

e) Expanded and updated the annex for cable selection to include a table of common cable sizes and additional equations for calculating resistance effects, and added considerations for jacketing, attenuation and capacitance

f) Added an annex as a design checklist for communication cables

g) Expanded and updated the annex for transient protection (shielding)

h) Added recommended maintenance

i) Added a flowchart in Annex A that references each annex

j) Added an example of cable system design in Annex O for a small substation

k) Removed the fire systems clauses and recommended these be included in the updating of IEEE Std 979™-1994 [B63] [a]

l) Updated to latest version of the IEEE Standards Style Manual

m) Corrected some of the axis labels for percent occupancy in Figure J.1 as required by IEEE Std 525-2007/Cor1:2008

Notice to users

Laws and regulations

Users of these documents should consult all applicable laws and regulations. Compliance with the provisions of this standard does not imply compliance to any applicable regulatory requirements. Implementers of the standard are responsible for observing or referring to the applicable regulatory requirements. IEEE does not, by the publication of its standards, intend to urge action that is not in compliance with applicable laws, and these documents may not be construed as doing so.

[a] The numbers in brackets correspond to those of the bibliography in Annex P.

Copyright © 2008 IEEE. All rights reserved.
Affordable Wire Management, Exhibit No. EX1022
Case No. IPR2024-00182
Page 4 of 129

Copyrights

This document is copyrighted by the IEEE. It is made available for a wide variety of both public and private uses. These include both use, by reference, in laws and regulations, and use in private self-regulation, standardization, and the promotion of engineering practices and methods. By making this document available for use and adoption by public authorities and private users, the IEEE does not waive any rights in copyright to this document.

Updating of IEEE documents

Users of IEEE standards should be aware that these documents may be superseded at any time by the issuance of new editions or may be amended from time to time through the issuance of amendments, corrigenda, or errata. An official IEEE document at any point in time consists of the current edition of the document together with any amendments, corrigenda, or errata then in effect. In order to determine whether a given document is the current edition and whether it has been amended through the issuance of amendments, corrigenda, or errata, visit the IEEE Standards Association Web site at http://ieeexplore.ieee.org/xpl/standards.jsp, or contact the IEEE at the address listed previously.

For more information about the IEEE Standards Association or the IEEE standards development process, visit the IEEE-SA Web site at http://standards.ieee.org.

Errata

Errata, if any, for this and all other standards can be accessed at the following URL: http://standards.ieee.org/reading/ieee/updates/errata/index.html. Users are encouraged to check this URL for errata periodically.

Interpretations

Current interpretations can be accessed at the following URL: http://standards.ieee.org/reading/ieee/interp/index.html.

Patents

Attention is called to the possibility that implementation of this guide may require use of subject matter covered by patent rights. By publication of this guide, no position is taken with respect to the existence or validity of any patent rights in connection therewith. The IEEE is not responsible for identifying Essential Patent Claims for which a license may be required, for conducting inquiries into the legal validity or scope of Patents Claims or determining whether any licensing terms or conditions provided in connection with submission of a Letter of Assurance, if any, or in any licensing agreements are reasonable or non-discriminatory. Users of this guide are expressly advised that determination of the validity of any patent rights, and the risk of infringement of such rights, is entirely their own responsibility. Further information may be obtained from the IEEE Standards Association.

Copyright © 2008 IEEE. All rights reserved.

Participants

IEEE Std 525-2007

At the time this guide was submitted to the IEEE-SA Standards Board for approval, the Cable Systems in Substations Working Group had the following membership:

Hanna Abdallah, *Chair*
Diane Watkins, *Vice Chair*

R. Steven Brown
Steven D. Brown
Randy D. Clelland
Walter Constantine
Jeff Dicharry
Gary R. Engmann
Steven Guinty
John Irvine
Dick Jones
Alan Kollar
Donald N. Laird
Debra Longtin
Shashi Patel
Sam Perkins
John D. Randolph
Hamid Sharifnia
Steve Shelton
Boris Shvartsberg
Gary Stephenson
Bob Stewart
Bill Thompson
Charles F. Todd

The following members of the individual balloting committee voted on this guide. Balloters may have voted for approval, disapproval, or abstention.

William J. Ackerman
S. K. Aggarwal
Steven C. Alexanderson
Ali Al Awazi
Thomas M. Barnes
Michael G. Bayer
Wallace B. Binder, Jr.
William G. Bloethe
Stuart H. Bouchey
Steven R. Brockschink
Kent W. Brown
Steven D. Brown
Gustavo A. Brunello
William A. Byrd
Randy D. Clelland
Tommy P. Cooper
Luis M. Coronado
Kevin E. Donahoe
Randall L. Dotson
Donald G. Dunn
Gary R. Engmann
Michael J. Garland
David L. Garrett
George Gela
Waymon P. Goch
James W. Graham
Randall C. Groves
Richard L. Harp
David A. Horvath
Dennis Horwitz
Clark A. Jacobson
James H. Jones
Lars E. Juhlin
Gael Kennedy
Javeed A. Khan
J. L. Koepfinger
Boris Kogan
Jim Kulchisky
Scott R. Lacy
Donald N. Laird
Chung-Yiu Lam
Thomas W. La Rose
Gerald E. Lee
Albert Livshitz
G. L. Luri
Keith N. Malmedal
Jose A. Marrero
Frank W. Mayle
Mark F. McGranaghan
John E. Merando, Jr.
Gary L. Michel
Georges F. Montillet
Rachel I. Mosier
Jerry R. Murphy
Shantanu Nandi
Jeffrey H. Nelson
Arthur S. Neubauer
Michael S. Newman
Joe W. Nims
Percy E. Pool
John D. Randolph
Michael A. Roberts
Charles W. Rogers
Anne-Marie Sahazizian
Steven Sano
Bartien Sayogo
Devki N. Sharma
Hyeong J. Sim
Tarkeshwar Singh
Jerry W. Smith
Malcolm V. Thaden, Jr.
Charles F. Todd
T. P. Traub
Joe D. Watson
Kenneth D. White
James W. Wilson, Jr.
Larry S. Young
Roland E. Youngberg
Luis E. Zambrano

Copyright © 2008 IEEE. All rights reserved.
Affordable Wire Management, Exhibit No. EX1022
Case No. IPR2024-00182
Page 6 of 129

When the IEEE-SA Standards Board approved this guide on 8 March 2007, it had the following membership:

Steve M. Mills, *Chair*
Robert M. Grow, *Vice Chair*
Don Wright, *Past Chair*
Judith Gorman, *Secretary*

Richard DeBlasio
Alex Gelman
William R. Goldbach
Arnold M. Greenspan
Joanna N. Guenin
Kenneth S. Hanus
William B. Hopf
Richard H. Hulett
Hermann Koch
Joseph L. Koepfinger*
John Kulick
David J. Law
Glenn Parsons
Ronald C. Petersen
Tom A. Prevost
Narayanan Ramachandran
Greg Ratta
Robby Robson
Anne-Marie Sahazizian
Virginia C. Sulzberger
Malcolm V. Thaden
Richard L. Townsend
Howard L. Wolfman

*Member Emeritus

Also included are the following nonvoting IEEE-SA Standards Board liaisons:

Satish K. Aggarwal, *NRC Representative*
Michael H. Kelley, *NIST Representative*
Virginia C. Sulzberger, *TAB Representative*

Lorraine Patsco
IEEE Standards Program Manager, Document Development

Matthew J. Ceglia
IEEE Standards Program Manager, Technical Program Development

IEEE Std 525-2007/Cor1:2008

At the time IEEE Std 525-2007/Cor1:2008 was submitted to the IEEE-SA Standards Board for approval, the Cable Systems in Substations Working Group had the following membership:

Hanna Abdallah, *Chair*
Diane Watkins, *Vice Chair*

R. Steven Brown
Steven D. Brown
Randy D. Clelland
Walter Constantine
Gary R. Engmann
Debra Longtin
Shashi Patel
Sam Perkins
Fred Randolph
John D. Randolph
Hamid Sharifnia
Steve Shelton
Boris Shvartsberg
Bill Thompson
Charles F. Todd
Brian Wallace

Copyright © 2008 IEEE. All rights reserved.

The following members of the individual balloting committee voted on this corrigendum. Balloters may have voted for approval, disapproval, or abstention.

William J. Ackerman
Stan Arnot
Ali Al Awazi
Radoslav Barac
Steven Bezner
Steven Brockschink
Randy Clelland
Tommy Cooper
F. A. Denbrock
Gary L. Donner
Michael Dood
Donald Dunn
Gary Engmann
Edwin Goodwin
James Graham
Randall Groves
Ajit Gwal
Lee S. Herron
Gael Kennedy
J. Koepfinger
Robert Konnik
Jim Kulchisky
Saumen Kundu
Donald Laird
Chung-Yiu Lam
Albert Livshitz
Debra Longtin
Federico Lopez
Keith N. Malmedal
William Mcbride
John Merando
Jeffrey Merryman
Gary Michel
Georges Montillet
Jerry Murphy
Michael S. Newman
Percy Pool
Iulian Profir
John Randolph
Michael Roberts
Bartien Sayogo
Devki Sharma
Douglas Smith
James E. Smith
Ryan Stargel
Malcolm Thaden
John Vergis
Jane Verner
Kenneth White
James Wilson
Roland Youngberg
Ahmed Zobaa

When the IEEE-SA Standards Board approved this corrigendum on 27 March 2008, it had the following membership:

Robert M. Grow, *Chair*
Steve Mills, *Past Chair*
Judith Gorman, *Secretary*

Victor Berman
Richard DeBlasio
Andy Drozd
Mark Epstein
Alexander Gelman
William Goldbach
Arnie Greenspan
Ken Hanus
Jim Hughes
Richard Hulett
Young Kyun Kim
Joseph L. Koepfinger*
John Kulick
David J. Law
Glenn Parsons
Ron Petersen
Chuck Powers
Thomas Prevost
Narayanan Ramachandran
Jon Walter Rosdahl
Anne-Marie Sahazizian
Malcolm Thaden
Howard Wolfman
Donald F. Wright

*Member Emeritus

Also included are the following nonvoting IEEE-SA Standards Board liaisons:

Satish K. Aggarwal, *NRC Representative*
Michael H. Kelley, *NIST Representative*

Lorraine Patsco
IEEE Standards Program Manager, Document Development

Soo Kim
IEEE Standards Program Manager, Technical Program Development

Copyright © 2008 IEEE. All rights reserved.
Affordable Wire Management, Exhibit No. EX1022
Case No. IPR2024-00182
Page 8 of 129

Contents

1. Overview 1

1.1 Scope 1
1.2 Purpose 1

2. Normative references 2

3. Special terms 2

4. Control and instrumentation cable 3

4.1 General 3
4.2 Service conditions (see Annex B) 3
4.3 Cable selection (see Annex C) 4
4.4 Cable raceway design (see Annex E) 6
4.5 Routing (see Annex F) 6
4.6 Transient protection (see Annex G) 7
4.7 Electrical segregation (see Annex H) 7
4.8 Separation of redundant cable (see Annex I) 7
4.9 Cable pulling tension (see Annex J) 7
4.10 Handling (see Annex K) 7
4.11 Installation (see Annex L) 7
4.12 Acceptance testing (see Annex M) 7
4.13 Recommended maintenance (see Annex N) 7

5. Communication cable 7

5.1 General 7
5.2 Service conditions (see Annex B) 8
5.3 Cable selection (see Annex C) 8
5.4 Cable raceway design (see Annex E) 11
5.5 Routing (see Annex F) 11
5.6 Transient protection (see Annex G) 12
5.7 Electrical segregation (see Annex H) 13
5.8 Separation of redundant cable (see Annex I) 13
5.9 Cable pulling tension (see Annex J) 13
5.10 Handling (see Annex K) 13
5.11 Installation (see Annex L) 13
5.12 Acceptance testing (Annex M is not applicable) 13
5.13 Recommended maintenance (see Annex N) 13

6. Fiber-optic cable 14

6.1 General 14
6.2 Service conditions (see Annex B) 14
6.3 Cable selection (see Annex C) 14
6.4 Cable raceway design (see Annex E) 15
6.5 Routing (see Annex F) 15
6.6 Transient protection (Annex G is not applicable) 15

Copyright © 2008 IEEE. All rights reserved.

6.7 Electrical segregation (see Annex H) 15
6.8 Separation of redundant cable (see Annex I) 15
6.9 Cable pulling tension (see Annex J) 15
6.10 Handling (see Annex K) 15
6.11 Installation (see Annex L) 16
6.12 Acceptance testing (see Annex M) 17
6.13 Recommended maintenance (see Annex N) 17

7. Power cable (ac and dc < 1 kV) 17

7.1 Service conditions (see Annex B) 17
7.2 Cable selection (see Annex C) 17
7.3 Cable raceway design (see Annex E) 17
7.4 Routing (see Annex F) 17
7.5 Transient protection (see Annex G) 17
7.6 Electrical segregation (see Annex H) 17
7.7 Separation of redundant cable (see Annex I) 18
7.8 Cable pulling tension (see Annex J) 18
7.9 Handling (see Annex K) 18
7.10 Installation (see Annex L) 18
7.11 Acceptance testing (see Annex M) 18
7.12 Recommended maintenance (see Annex N) 18

8. Power cable (1 kV to 35 kV) 18

8.1 Service conditions (see Annex B) 20
8.2 Cable selection (see Annex C) 20
8.3 Cable raceway design (see Annex E) 20
8.4 Routing (see Annex F) 20
8.5 Transient protection (see Annex G) 20
8.6 Electrical segregation (see Annex H) 21
8.7 Separation of redundant cable (see Annex I) 21
8.8 Cable pulling tension (see Annex J) 21
8.9 Handling (see Annex K) 21
8.10 Installation (see Annex L) 21
8.11 Acceptance testing (see Annex M) 21
8.12 Recommended maintenance (see Annex N) 21

9. Other cables (future) 21

Annex A (informative) Flowchart 22

Annex B (normative) Service conditions 24

Annex C (normative) Cable selection 25

Annex D (informative) Design checklist for communication cables 39

Annex E (normative) Cable raceway design 42

Copyright © 2008 IEEE. All rights reserved.

Annex F (normative) Routing 50

Annex G (normative) Transient protection of instrumentation, control, and power cable 52

Annex H (normative) Electrical segregation 62

Annex I (normative) Separation of redundant cable 63

Annex J (normative) Cable pulling tension calculations 64

Annex K (normative) Handling 74

Annex L (normative) Installation 75

Annex M (normative) Acceptance testing 78

Annex N (normative) Recommended maintenance and inspection 79

Annex O (informative) Example for small substation 81

Annex P (informative) Bibliography 112

Copyright © 2008 IEEE. All rights reserved.

IEEE Guide for the Design and Installation of Cable Systems in Substations

IMPORTANT NOTICE: This standard is not intended to assure safety, security, health, or environmental protection in all circumstances. Implementers of the standard are responsible for determining appropriate safety, security, environmental, and health practices or regulatory requirements.

This IEEE document is made available for use subject to important notices and legal disclaimers. These notices and disclaimers appear in all publications containing this document and may be found under the heading "Important Notice" or "Important Notices and Disclaimers Concerning IEEE Documents." They can also be obtained on request from IEEE or viewed at http://standards.ieee.org/IPR/disclaimers.html.

1. Overview

The main clauses of the guide are organized by cable type and each of these clauses has been organized to match the general steps involved in the design process for a substation cable system (see Annex A for a flowchart diagram). Common information for each type of cable is placed in the annexes and is referenced from the body of the guide. The rationale for organizing the guide in this manner is to make it easier for the user to find the information needed as quickly and efficiently as possible, especially for those individuals unfamiliar with the design of cable systems in substations.

1.1 Scope

This document is a guide for the design, installation, and protection of insulated wire and cable systems in substations with the objective of minimizing cable failures and their consequences. This guide is not an industry standard or a compliance standard.

1.2 Purpose

The purpose of this guide is to provide guidance to the substation engineer in established practices for the application and installation of metallic and optical cables in electric power transmission and distribution substations with the objective of minimizing premature cable failures and their consequences. This guide emphasizes reliable electrical service and safety during the design life of the substation.

Copyright © 2008 IEEE. All rights reserved.

Regarding cable performance, no single cable characteristic should be emphasized to the serious detriment of others. In addition to good installation, design, and construction practices, a balance of cable characteristics is necessary to provide a reliable cable system.

Solutions presented in this guide may not represent the only acceptable practices for resolving problems.

This guide should not be referred to or used as an industry standard. It is being presented to aid in the development of wire and cable system installations and is not a compliance standard.

2. Normative references

The following referenced documents are indispensable for the application of this guide. For dated references, only the edition cited applies. For undated references, the latest edition of the referenced document (including any amendments or corrigenda) applies.

Accredited Standards Committee C2-2002, National Electrical Safety Code® (NESC®).[1, 2]

IEEE Std 575, IEEE Guide for the Application of Sheath-Bonding Methods for Single-Conductor Cables and the Calculation of Induced Voltages and Currents in Cable Sheaths.[3, 4]

IEEE Std 835, IEEE Standard Power Cable Ampacity Tables.

3. Special terms

The majority of definitions for terms or abbreviations used in this guide are included in the *The Authoritative Dictionary of IEEE Standards Terms* [B46].[5] The following special terms include anomalous terms, acronyms, and abbreviations appearing in this guide.

3.1 ABS: Conduit fabricated from acrylonitrile-butadiene-styrene.

3.2 design life of the substation: The time during which satisfactory substation performance can be expected for a specific set of service conditions, based upon component selection and applications.

3.3 EPC-40: Electrical plastic conduit for type DB applications, fabricated from PE; or for type DB and Schedule 40 applications, fabricated from PVC.

3.4 EPC-80: Electrical plastic conduit for Schedule 80 applications, fabricated from PVC.

3.5 EPT: Electrical plastic tubing for type EB applications, fabricated from PVC.

3.6 FRE: Conduit fabricated from fiberglass reinforced epoxy.

3.7 IMC: Intermediate metal conduit

---

[1] The NESC is available from the Institute of Electrical and Electronics Engineers, 445 Hoes Lane, Piscataway, NJ 08854, USA (http://standards.ieee.org/).
[2] National Electrical Safety Code and NESC are registered trademarks in the U.S. Patent & Trademark Office, owned by The Institute of Electrical and Electronics Engineers, Incorporated.
[3] IEEE publications are available from the Institute of Electrical and Electronics Engineers, 445 Hoes Lane, Piscataway, NJ 08854, USA (http://standards.ieee.org/).
[4] The IEEE standards or products referred to in Clause 2 are trademarks of the Institute of Electrical and Electronics Engineers, Inc.
[5] The numbers in brackets correspond to those of the bibliography in Annex P.

Copyright © 2008 IEEE. All rights reserved.

3.8 IRIG-B: Inter-range instrumentation group—time code format B; a serial time code format to correlate data with time

3.9 OPGW: Optical power ground wire, or optical ground wire

3.10 RMC: Rigid metal conduit.

3.11 ROW: Right-of-way; a leased or purchased corridor for utility lines

3.12 Schedule 40: Duct designed for normal-duty applications above grade.

3.13 Schedule 80: Duct designed for heavy-duty applications above grade.

3.14 service life of cable: The time during which satisfactory cable performance can be expected for a specific set of service conditions.

3.15 Type DB: Duct designed for underground installation without encasement in concrete.

3.16 Type EB: Duct designed to be encased in concrete.

4. Control and instrumentation cable

4.1 General

Substation control cables are multiconductor cables used to transmit electrical signals with low voltage levels (less than 600 V) and relatively low current levels, between apparatus [e.g., power transformers, circuit breakers, disconnect switches, and voltage or current transformers (CTs), etc.], and protection, control and monitoring devices (e.g., relays and control switches, status lights, alarms, annunciators, etc.). Substation control signals may be digital or analog [e.g., voltage transformer (VT) and CT signals] and the control signal may be continuous or intermittent. Control signals may be “on” or “off,” with short or long time delays between a change of state.

The complete substation control cable assembly must provide reliable service when installed in equipment control cabinets, conduits, cable trenches, cable trays, or other raceway systems in the electric substation environment.

Instrumentation cables are multiconductor cables used to transmit low-energy (power-limited) electrical signals with low voltage levels (less than 130 V) and relatively low current levels between equipment (usually electronic, such as monitors and analyzers) and control equipment for apparatus. Signals in instrumentation cables could be continuous or intermittent depending on application.

As used in this guide, instrumentation cables consist of cables transmitting coded information (digital or analog) for Supervisory Controls and Data Acquisition (SCADA) systems, substation networks, event recorders, and thermocouple and resistance temperature detector cables.

In the United States, cables are usually designed and constructed in accordance with NEMA WC 57-2004/ICEA S-73-532 [B96].

As used in this guide, leads from CTs and VTs are considered control cables since in most cases they are used in relay protection circuits.

4.2 Service conditions (see Annex B)

Copyright © 2008 IEEE. All rights reserved.

4.3 Cable selection (see Annex C)

4.3.1 Conductor sizing

The function and location of the control and instrumentation cable circuits affect the conductor size. A conductor that is used to connect the CT secondary leads may have different requirements than a cable that is used for the VT secondary leads. Outdoor control cables may require larger conductor size to compensate for voltage drop due to the relatively long distance between the equipment and the control vault, especially for high-voltage and extra-high-voltage (EHV) substations. Smaller size control cables can be used inside the control building due to the short runs between the panels.

Because of new designs using microprocessor relays and programmable logic devices, there has been a general trend to increase the number of wire terminals on individual panel segments and or racks. This trend is limited by the practicality of decreasing terminal block and test switch size in order to accommodate the additional terminals. Decreasing terminal size creates a practical limit of maximum wire size. However, violation of minimum wire size requirements could cause voltage drop that results in a failure to trip, or current overload that damages the cable.

4.3.1.1 CT circuits

A four-conductor control cable can be used for a CT secondary circuit, which contains all three phases and the neutral. The CT cable conductor should be sized such that the CT standard burden is not exceeded. The CT cable conductor should also be sized to carry the CT continuous thermal rating (e.g., 10 A, 15A) and up to 20 times its normal load current from 0.1 s to 0.5 s during a fault (IEEE Std C57.13.3™-1983 [B75]).

Excessive impedance in CT secondary circuits can result in CT saturation. The loop lead resistance of a CT secondary should not exceed the required maximums for relay, instrument, and revenue metering circuits.

4.3.1.2 VT circuits

VT secondary circuits connect the VT secondaries to the protective and metering devices. The load current for these devices is very small; however, the voltage drop should be considered. The conductor size should be selected such that the VT standard burden is not exceeded, and so that the voltage drop is very small in order to provide the protective and metering devices with the actual voltage at the location of the VTs.

4.3.1.3 Trip and close coil circuits

Ampacity and voltage drop requirements should be considered when determining the size of the control cables that connect to the trip and close coils of the circuit breakers. The conductor size should be capable of carrying the maximum trip coil current, and allow for adequate voltage drop based on the trip coil rating. To insure that actuation of a circuit protective device does not result in a failure to trip, the circuit protection should be selected with a trip rating that is significantly higher than the expected duty. The trip and close cable conductor should have an ampacity that equals, or exceeds, the trip rating of the fuse or circuit breaker protecting the circuit.

4.3.1.4 Circuit breaker motor backup power

Some high-voltage circuit breakers use an ac/dc spring-charging motor connected to the dc control circuit. These motors can run on dc, if the normal ac station service voltage supply to the circuit breaker is lost. The circuit breaker motor supply cable should be selected with a continuous duty ampacity that equals or exceeds the expected ac and dc motor current. The conductor should be sized such that the voltage drop, at the minimum expected ac and dc supply voltage, provides a voltage at the motor within the motor rating.

The load characteristic of a typical spring charging motor is shown in Figure 1. The typical current draw is much higher than the specified “run” current and should be considered in the design.

Copyright © 2008 IEEE. All rights reserved.

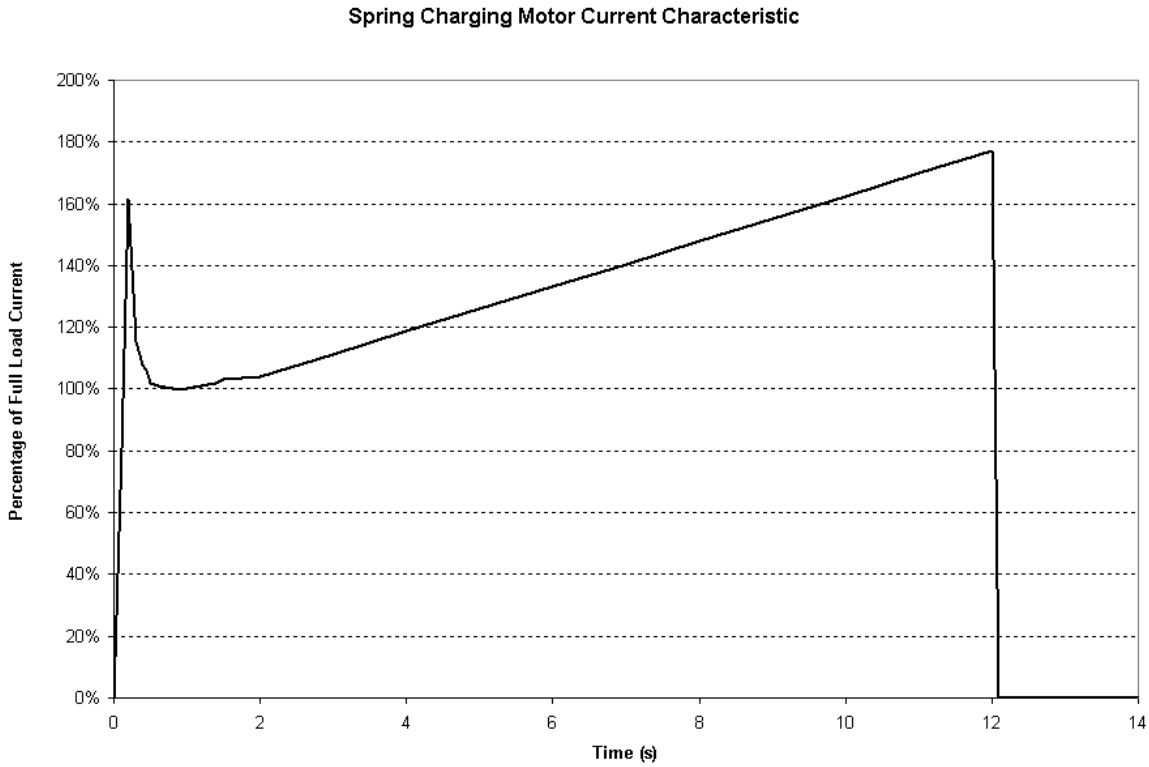

Figure 1—Spring charging motor load characteristic

4.3.1.5 Alarm and status circuits

Alarm and status circuits carry very small current, and voltage drop is not a concern. As a result, a smaller size conductor can be used for these circuits.

4.3.1.6 Battery circuits

The station battery will have an operating range with a minimum terminal voltage. DC utilization equipment, e.g., breaker trip coils, protective relays, will have a minimum voltage rating for operation. The battery cable conductors should be selected so that the voltage drop from the battery terminals to the utilization equipment, for the expected load current, does not result in a voltage below the minimum voltage rating of the utilization equipment. A designer should consider using end of discharge voltage for critical circuits. These would include circuit breaker trip and close coils that are required to operate at the end of a battery's discharge period.

4.3.2 Voltage rating

Low-voltage control cable rated 600 V and 1000 V are currently in use. For control cables applied at 600 V and below, 600 V rated insulation is most commonly used. Some engineers use 1000 V rated insulation because of past insulation failures caused by inductive voltage spikes from de-energizing electromechanical devices, e.g., relays, spring winding motors. The improved dielectric strength of today's insulation materials prompted some utilities to return to using 600 V rated insulation for this application.

4.3.3 Cable construction

The principal components of substation control cables include conductors, conductor insulation, shielding, tape and filler, and covering.

Copyright © 2008 IEEE. All rights reserved.

Conductors for substation control cables may be solid or stranded and may be uncoated copper, tin-coated copper, or lead/lead alloy coated wires. Stranded conductors usually consist of 7 or 19 wires for Class B stranding. Conductor size usually ranges from 9 to 14 AWG (American Wire Gauge), but conductor size as small as 22 AWG may be utilized. Caution should be exercised before using such small conductors because of the possibility of mechanical damage.

Insulation for each conductor in a control cable is made from an extruded dielectric material suitable for use in either wet or dry locations or dry-only locations, and at maximum conductor temperatures ranging from 60 °C to 125 °C, depending on the type of insulation material utilized. Common insulation materials include, but are not limited to polyethylene (PE), cross-linked PE (XLPE) Types 1 and 2, silicone rubber (SR), synthetic rubber (SBR), and ethylene propylene rubber (EPR) Types 1 and 2, and polyvinyl chloride (PVC). The thickness of insulation varies with the type of insulation material, conductor size, and voltage rating.

Tape consisting of dielectric material is utilized to bind and separate layers of construction, and fillers made from thermoplastic or other materials are utilized to form a cylindrical shape for most cable assemblies.

Methods for identification of control cable conductors by number with base and tracer colors on each conductor are discussed in Appendix E of NEMA WC 57-2004/ICEA S-73-532 [B96]. Inner jackets for multi-conductor cables may be color-coded as well (reference Table E-1, Table E-2, and Table E-3 of NEMA WC 57-2004/ICEA S-73-532 [B96] for guidance).

4.4 Cable raceway design (see Annex E)

4.5 Routing (see Annex F)

All control circuits in a substation should be installed in a radial configuration, i.e., route all conductors comprising a control circuit in the same cable; or if conduit is used, within the same conduit.

Radial arrangement of control circuitry reduces transient voltages. Circuits routed into the switchyard from the control house should not be looped from one piece of apparatus to another in the switchyard with the return conductor in another cable. All supply and return conductors should be in a common cable to avoid the large electromagnetic induction possible because of the very large flux-linking-loop arrangement otherwise encountered. Also, this arrangement helps avoid common impedances that cause differential and common-mode voltages. This recommendation is especially important for supply and ground circuits.

If the substation has a capacitor bank, all control cables not specifically associated with capacitor controls or protection should be removed from the immediate area around the capacitor bank to avoid induction of surges into relaying systems or possible control cable failure during capacitor bank switching. The routing of control cables from capacitor bank neutral CTs or VTs should be kept at right angles with respect to the common neutral for single point grounding and in parallel with the tie to the substation ground for peninsular grounding to minimize induction ("Shunt capacitor switching EMI voltages, their reduction in Bonneville Power Administration substations" [B26]). Control cables entering the capacitor bank area should be kept as close as possible to the ground grid conductors in the cable trench, or on top of the duct run, or in contact with the ground grid conductor if directly buried (see IEEE Std C37.99™-2000 [B74]).

All dc circuits are normally 'radial,' i.e., the positive and negative leads ('go' and 'return' circuits) are kept within the same cable. In alarm and relay circuits where there might be one positive and several negative returns, all leads should be in the same jacket.

In circuits where the positive and negative are in separate cables for specific reasons, such as the circuit between the charger and station battery, the positive and negative should be physically close together wherever practical.

Copyright © 2008 IEEE. All rights reserved.

Where dc motors are connected to the substation control battery, as for motor operated disconnect switches, the voltage may be provided by a "yard bus." The yard bus is a single pair of large conductors that are sized to supply several, or all, of the connected motor loads simultaneously.

4.6 Transient protection (see Annex G)

High energy transients may cause failures in low-voltage substation equipment such as solid-state relays, transducers, measuring instruments, and remote terminal units (RTUs) connected at the ends of control or instrumentation cables. In a substation environment, the high energy sources typically include power-frequency fault currents, lightning, or switching transients. Sometimes these influences are also responsible for erroneous operations of relays causing partial or entire substation shutdown. The overvoltages may even damage transient surge suppressor devices such as metal oxide varistors or gas discharge tubes at the terminals. Shielded cables are typically applied in higher voltage substations (voltages at 230 kV and higher) or at lower voltages for specific applications.

4.7 Electrical segregation (see Annex H)

Segregation of control cables in the substation cable trench or cable tray system is generally not necessary.

Control cables should not be installed in ducts or trenches containing medium-voltage cables (greater than 1000 V).

4.8 Separation of redundant cable (see Annex I)

4.9 Cable pulling tension (see Annex J)

4.10 Handling (see Annex K)

4.11 Installation (see Annex L)

4.12 Acceptance testing (see Annex M)

Control cables should be insulation-resistance tested prior to connecting cables to equipment. They may be tested as part of the system checkout.

4.13 Recommended maintenance (see Annex N)

5. Communication cable

5.1 General

Substation communications requires multi-conductor cables to transfer signals at low voltage and current levels between intelligent electronic devices (IEDs) at the substation and communication equipment at the

Copyright © 2008 IEEE. All rights reserved.

remote site. This data transfer involves multiple types of cables, including telephone, data and coaxial cables. Telephone cables transfer voice and data signals, unshielded twisted pair (UTP) cables transfer high-frequency data and coaxial cables transfer data for antenna and power-line carrier (PLC) tasks. A step-by-step checklist for the design of substation communications systems can be found in Annex D. Other means of communication exist within the substation, e.g., microwave. These other means are not covered in this guide, which focuses on substation cabling only. For additional information on substation communications, specifically fiber optics, see Clause 6 of this guide.

5.2 Service conditions (see Annex B)

5.2.1 Ground potential rise considerations

With any data connection to a substation or switchyard, ground potential rise (GPR) should be considered in order to protect sensitive equipment. This consideration requires close coordination with the engineering staff of outside entities (e.g., telephone company) to ensure appropriate isolation equipment is installed. As a result, offsite equipment is adequately protected from unacceptable voltage increases in the event of a fault.

5.3 Cable selection (see Annex C)

5.3.1 Telephone cable

Telephone cables have traditionally been essential for the transfer of voice and basic data signals. These communication conductors are twisted and shielded in pairs of 2 to 50. The conductors are typically individually insulated and range in size from 22 to 26 AWG copper. In selecting a cable, the larger sizes will help reduce the effects of resistance on signal transmission. These circuits can be either dial-up or dedicated.

5.3.1.1 Dial-up circuits

Dial-up circuits provide one communication path for multiple devices. Each device only uses the path for a relatively small amount of time; therefore, a dedicated circuit is not required. In some substations, telephone switch or circuit sharing equipment is used to reduce the number of telephone lines and the associated installation and rental fees. Within the confines of a substation, dial-up circuits have four main functions. First, operations and maintenance personnel use telephone voice circuits to receive switching instructions, report hardware status and provide emergency notifications. Second, dial-up service may be provided for feeder or transmission line revenue or operations/survey metering. In this case, revenue meters are polled for the latest measurements only at a specified time. Third, dial-up circuits are used for security and fire protection systems. If heat, smoke or intrusion detectors are activated, the dispatcher or local authorities are immediately notified via an auto dialer. Lastly, protection engineers can also access protective relays, or IEDs, via a dial-up connection to interrogate the hardware or modify settings.

The transfer rate of dial-up cables varies. Older cabling is limited to 24 kbps; however, with new coding techniques like high bit-rate digital subscriber lines, transmission of T1 services of 1.544 Mbps can be achieved. T1 is a time-domain modulation digital channel carrier that in combination with DS-1 (framing and transmitting specification) can provide up to twenty-four 64 kbps channels. T1 lines are generally used for bulk power substations with significant data transmission requirements.

Considering the cost of a cable installation from an off-site trunk line, a typical substation telephone cable connection generally has a 50% spare pair ratio.

Copyright © 2008 IEEE. All rights reserved.

5.3.1.2 Dedicated circuits

Some substation data is either highly critical to the functioning of the substation or needs to be constantly accessible. In these cases, telephone circuits that are either "always" active or are dedicated to a specific function are used. These applications may include protective relay communications for tripping signals and SCADA RTU "real time"—within the equipment polling parameters—operations data. RTUs on dedicated circuits provide switching equipment control, equipment (disconnect and circuit breaker) status, analog quantities (megawatts, Mvars, voltages) and alarm indications. These circuits are also expensive and, in addition to the installation costs, have significant monthly rental fees.

5.3.2 Data cables

UTP data cables for networking and data bus communication systems are relatively new in IED applications. Initially three commonly accepted "cable performance" levels were established for communications cable: 1) POTS (plain old telephone service); 2) low speed computer network applications; and 3) Ethernet "rings" with 16 MHz cable bandwidth frequencies. Later levels 4 and 5 were developed for a higher capacity of 100 Mbps. Later, the term "CAT" (category) was established by such standards as EIA/TIA 568 [B13], EIA/TIA 569 [B14], EIA/TIA 607 [B15], and the associated technical service bulletins (TSBs) 36, 40A, 53.

There are several designations for CAT cables. These designations are based on the frequency capability of the cable. Most CAT cables consist of four 24 AWG twisted pair solid copper conductors with the frequency performance dependant upon the number of twists and insulation type used. CAT 6 cables, for example, expand the frequency range to 155 MHz and CAT 7 may provide a frequency range from 200 MHz to as high as 600 MHz. Today's applications generally employ CAT 5 cables. For most "small" local area networks (LANs), only two of the four pairs are used to provide full duplex, simultaneous bi-directional communications.

Data transfer requirements/limitations should also be considered when the cabling is selected.

Care should be taken in protecting CAT cables. They generally do not have control cable grade jackets and, if run in an exposed area, should be provided additional physical protection.

Figure 2 and Figure 3 demonstrate some typical examples of data cable utilization. In Figure 2, a human-machine interface (HMI) communicates through a CAT 5 cable to the operations meters, then the alarm I/O device and finally the protection relays. In Figure 3, CAT 5 cabling is used for data communications between a power plant DCIS and the RTU in the plant switchyard (IEEE Std 1050™-1996 [B65]).

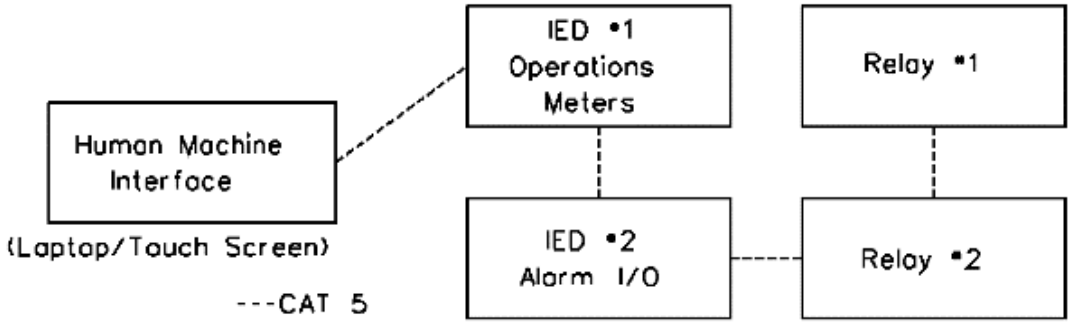

Figure 2—Data communication—HMI to meters

Copyright © 2008 IEEE. All rights reserved.

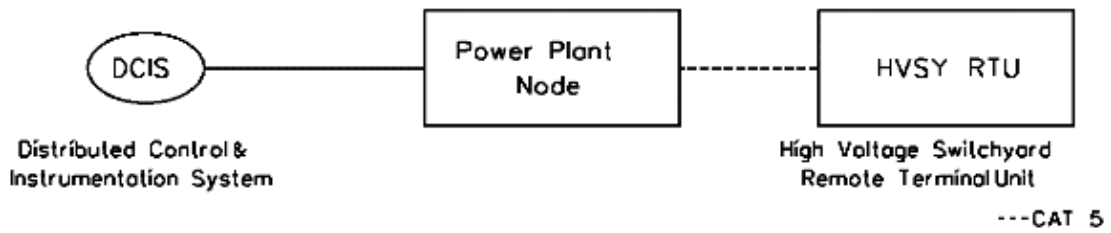

Figure 3—Data communication—Power plant to switchyard

5.3.3 Coaxial cable

A third type of hardwire data cabling used in substations is coaxial cable. This cable consists of an outer jacket, outer shield or conductor, a dielectric insulator (PE) and an inner solid or stranded conductor. The outer conductor or braid acts as both a shield and a return path conductor. Typical uses include antenna feeds for IRIG-B (time synchronization) and PLC applications. There are multiple types of coax depending on the application (e.g., RG-6 or 59). Advantages of coaxial cable include the following: high bandwidth, low signal distortion, low susceptibility to cross-talk and noise, and greater information security. However, coaxial cable is more difficult to install, heavier, and does not have the flexibility offered by twisted pair cables. Equipment manufacturers should be contacted to provide application-specific selection guidance.

Figure 4 shows two common applications of coaxial cables. The first is the connection between an IRIG-B port and an outdoor antenna in order to provide satellite time synchronization for protection equipment. The second example shows the connections involved in PLC communications.

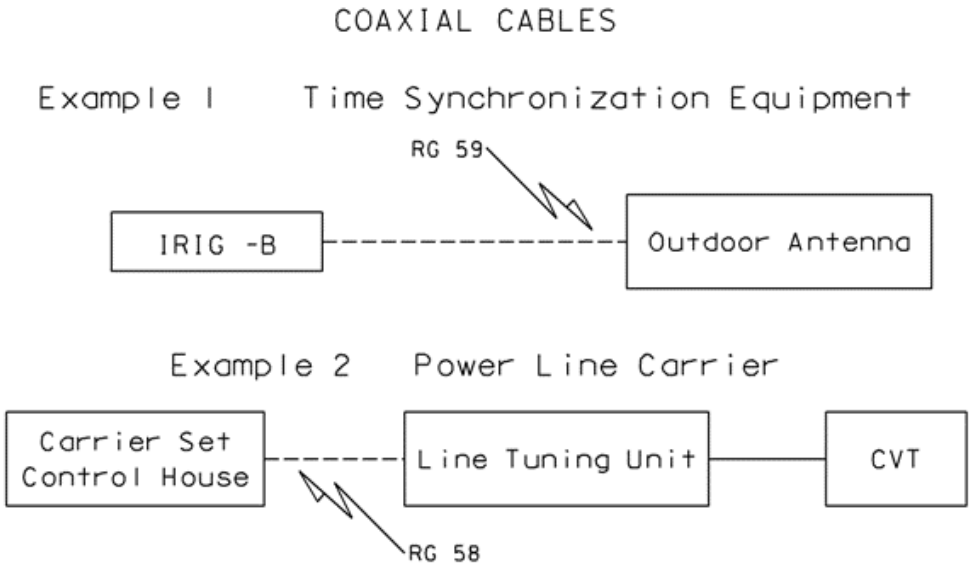

Figure 4—Example coaxial cable communications block diagram

Copyright © 2008 IEEE. All rights reserved.

5.4 Cable raceway design (see Annex E)

5.5 Routing (see Annex F)

5.5.1 Telephone cables

Figure 5 illustrates a typical telephone communications block diagram. The isolation device (high-voltage interface per IEEE Std 487™-2000 [B56]) separates the substation equipment (right-hand side of figure) from outside equipment such as the telephone company switch (left-hand side of figure). Signals from the remote source arrive first at the multiplexer. In this example, five circuits are then produced. The first is a standard telephone voice circuit. Second is an automatic dial-up fire/security line. The third circuit serves the revenue meters and digital fault recorder through a circuit-sharing device. Circuits 4 and 5 represent examples of dedicated circuits. Circuit 4 is dedicated to the RTU communications, and Circuit 5 is dedicated to protective relay communications.

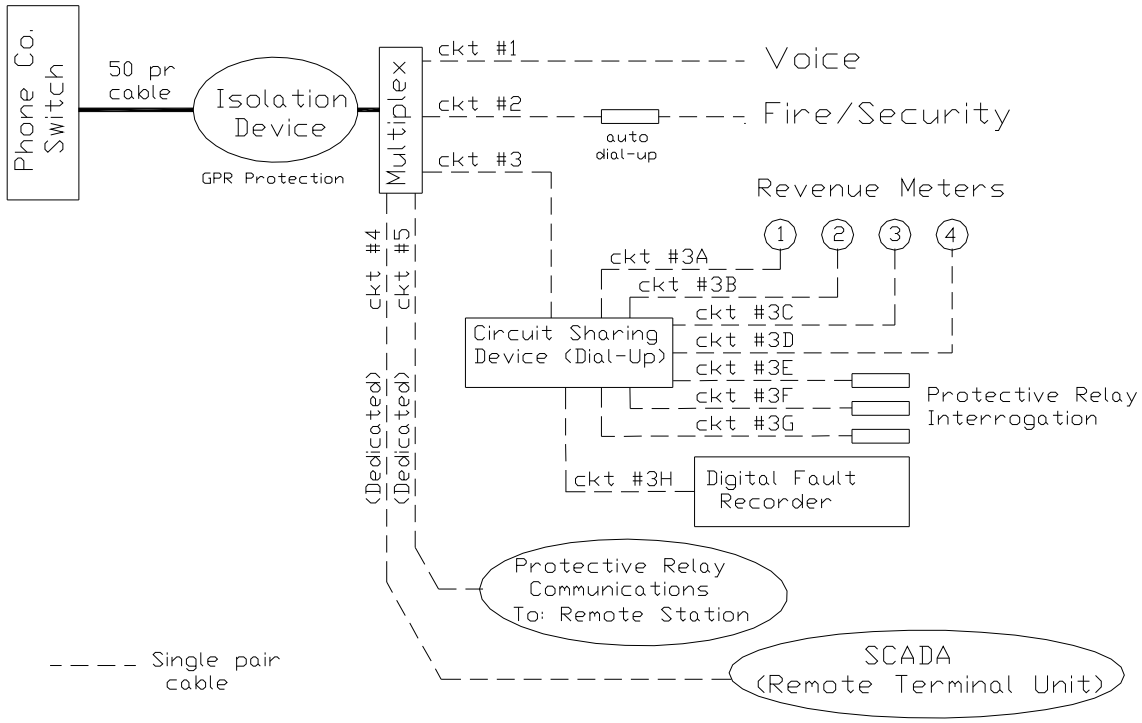

Figure 5—Example telephone communications block diagram

5.5.2 Data cables

These cables are generally installed within cabinets and cable trays to connect devices within a control house.

Copyright © 2008 IEEE. All rights reserved.

5.6 Transient protection (see Annex G)

5.6.1 High-speed data circuits

The following guidelines are provided for computer circuits and the circuits for high-speed data logging applications using low level analog signals:

a) The circuits should be made up of twisted pair shielded cables. For noncomputer-type applications, such as annunciators, shielding may not be required.

b) Twisting and shielding requirements for both digital input and digital output signals vary among different manufacturers of computerized measuring systems. Separation of digital input cables and digital output cables from each other and from power cables may be required. Where digital inputs originate in proximity to each other, twisted pair multiple conductor cables with overall shield should be used or multiple conductor cable with common return may be permitted, and overall shielding may not be required. Digital output cables of similar constructions may also be permitted. Individual twisted and shielded pairs should be considered for pulse-type circuits.

c) Cable shields should be electrically continuous except when specific reasons dictate otherwise. When two lengths of shielded cable are connected together at a terminal block, an insulated point on the terminal block should be used for connecting the shields.

d) At the point of termination, the shield should not be stripped back any further than necessary from the terminal block.

e) The shield should not be used as a signal conductor.

f) Use of twisted pair shielded cable into balanced terminations greatly improves transient suppression.

g) Use of a common line return both for a low-voltage signal and a power circuit should not be allowed (Garton and Stolt [B22]).

h) Digital signal circuits should be grounded only at the power supply.

i) The shields of all grounded junction thermocouple circuits and the shields of thermocouple circuits intentionally grounded at the thermocouple should be grounded at or near the thermocouple well.

j) Multi-pair cables used with thermocouples should have twisted pairs with individually insulated shields so that each shield may be maintained at the particular thermocouple ground potential.

k) Each resistance temperature detector (RTD) system consisting of one power supply and one or more ungrounded RTDs should be grounded only at the power supply.

l) Each grounded RTD should be on a separate ungrounded power supply except that groups of RTDs embedded in the windings of transformers and rotating machines should be grounded at the frame of the respective equipment as a safety precaution. A separate ungrounded power supply should be furnished for the group of RTDs installed in each piece of equipment.

m) When a signal circuit is grounded, the low or negative voltage lead and the shield should be grounded at the same point.

5.6.2 Telephone cables—Dial-up circuits

Cable shielding using metal braid or Mylar film is an important requirement for telephone cabling within a substation. Crosstalk, electromagnetic interference (EMI), and transient spikes can seriously affect the transmission of digital signals. The most effective method to provide a low signal to noise ratio is to shield

Copyright © 2008 IEEE. All rights reserved.

the individual pairs. An overall shield limits exterior interferences but will not protect against internal coupling and cross-talk. In general, communications cable shields are grounded at one end to prevent ground loop potentials and the associated noise. In cases where equipment designs require grounds at both ends, capacitors can be used between the shield and ground to block dc voltages. Isolation amplifiers have also been employed.

5.6.3 Isolation of telecommunication cables

In general, the local telephone company provides one or more isolating devices in the substation and leases the protection interface including its maintenance to the power company. One or more of the following protection devices may be installed to protect against power-frequency GPR.

Typically, the following isolation equipment is used:

a) Drainage unit (drainage reactor/mutual drainage reactor) is a center-tapped inductive device designed to relieve conductor-to-conductor and conductor-to-ground voltage stress by draining extraneous currents to ground.

b) Isolating (insulating) transformers provide longitudinal (common mode) isolation for the facility. They can also be used in a combined isolating-drainage transformer configuration.

c) Neutralizing transformers introduce a voltage into a circuit pair to oppose an unwanted voltage. They neutralize extraneous longitudinal voltages resulting from ground voltage rise or longitudinal induction, or both, while simultaneously allowing ac or dc metallic signals to pass.

d) Optical couplers (isolators) provide isolation using a short-length optical path.

For additional information on these methods, see IEEE Std 487™-2000 [B56] and IEEE Std 1590™ [B71].

5.7 Electrical segregation (see Annex H)

5.8 Separation of redundant cable (see Annex I)

5.9 Cable pulling tension (see Annex J)

5.10 Handling (see Annex K)

5.11 Installation (see Annex L)

5.12 Acceptance testing (Annex M is not applicable)

Follow the cable manufacturer's recommendations.

5.13 Recommended maintenance (see Annex N)

Copyright © 2008 IEEE. All rights reserved.

6. Fiber-optic cable

6.1 General

Substation fiber-optic cable may be used to interconnect substation control and protection equipment, to connect the substation equipment to offsite circuits, and to connect instrumentation and communication devices [e.g., optical CTs and PTs (potential transformers)].

6.2 Service conditions (see Annex B)

6.3 Cable selection (see Annex C)

6.3.1 Fiber cable selection

Fiber-optic cables are typically specified with the following information for proper application:

a) Number of fibers, e.g., 2, 4, 8 per cable

b) Fiber type, e.g., single mode, multimode or hybrid

c) Core/cladding diameter, e.g., 9/125, 50/125, 62.5/125 µm

d) Wavelength of transmitted light, e.g., 1300 nm

e) Distance to transmit signal

f) Type of armor if required, including application as optical power ground wire (OPGW)

Single-mode fibers have small cores about 9 µm in diameter with a cladding about 125 µm in diameter. These fibers transmit infrared laser light with wavelengths of 1310 nm to 1550 nm. Single-mode cables are more efficient at signal transfer and are used for transmission distances nominally greater than 1 km.

Multi-mode fibers have larger cores typically about 62.5 µm in diameter with cladding about 125 µm diameter, and transmit infrared light with wavelengths of 850 nm to 1300 nm from light-emitting diodes. Multi-mode cables are less expensive to install, less efficient than single-mode cables, and are used for shorter runs within substations. The termination devices are less expensive than for single-mode.

Due to impurities in the glass fibers the light signal degrades within the fiber, depending upon the wavelength of the transmitted light and the distance over which it is to be transmitted. When the signal is transmitted over great distances, optical regenerators may be required to boost signal strength.

6.3.2 Cable construction

There is a wide variety of fiber-optic cable constructions. In addition to the choice of single mode or multi-mode, the number of fibers can range from two to hundreds. The available constructions include cable that meets standards requirements for designation as indoor, outdoor, or indoor/outdoor. Cable is available with surrounding loose (buffer) tube, an internal dielectric tension member, a duct that is integral with the cable, and armor. Cable diameter is a function of the construction and ranges from 4 mm to more than 20 mm. Additional information about available cable constructions is available at various websites,[6] e.g., Bibliography, AFL Automotive,[7] Corning,[8] Prysmian,[9] Superior Essex.[10]

[6] This information is given for the convenience of the users of this standard and does not constitute an endorsement by the IEEE of these products.
[7] http://www.alcoa.com/afl_auto

Copyright © 2008 IEEE. All rights reserved.

To link substations together, fiber-optic cable may be installed on transmission or distribution lines using OPGW or all-dielectric self-supporting (ADSS) cable (IEEE Std 1138™-1994 [B66]). The OPGW or ADSS is usually terminated within the substation in an enclosure where the substation fiber-optic cable is connected to the OPGW or ADSS.

One of the types of conduit used for buried fiber-optic cable is the continuous-reeled type. Such continuous duct is popular because it is inexpensive and offers enough protection to allow the use of the less expensive cable constructions.

6.4 Cable raceway design (see Annex E)

6.5 Routing (see Annex F)

6.6 Transient protection (Annex G is not applicable)

Transient protection is not required due to the inherent properties of the fiber.

6.7 Electrical segregation (see Annex H)

The substation fiber-optic cable raceway may be cable tray, conduit, underground duct, or a trench system. However, conduit and duct offers protection from crushing, ground disruption, rodents, and other environmental abuse. In addition, the cable is easier to replace or upgrade in the future. Several methods and types of conduit systems are used. For example, one configuration includes pre-manufactured segregated ducts or large ducts with multiple plastic, high-density PE “inner ducts” installed inside. The inner ducts can be smooth walled or corrugated either longitudinally or horizontally.

6.8 Separation of redundant cable (see Annex I)

6.9 Cable pulling tension (see Annex J)

There may be special design considerations requiring maximum pulling tension or minimum bending radius that cannot be calculated using the guidelines in Annex J. For these situations follow the guidelines from the cable manufacturer.

6.10 Handling (see Annex K)

The glass fibers in the fiber-optic cable are reasonably robust. The glass fibers are usually well protected by buffer tubes, duct, armor, etc., which are part of the cable construction. Even though the glass in the fiber is actually stronger (higher tensile strength per unit area) than a metal conductor, there is very little cross-sectional area in a fiber available for strength and support. For this reason, most fiber-optic cables have other components to provide the strength for cable support during pulling, handling, etc.

---

[8] http://www.corningcablesystems.com
[9] http://www.us.prysmian.com
[10] http://www.superioressex.com

Copyright © 2008 IEEE. All rights reserved.

Pulling lubricants with some unique features are required by the special nature of optical cable pulling, i.e., long pull lengths and lengthy pull duration.

6.11 Installation (see Annex L)

Fiber-optic cable installation shall meet the requirements of the National Electrical Safety Code® (NESC®) (Accredited Standards Committee C2-2002[11]). Although the National Electrical Code® (NEC®) (NFPA 70, 2007 Edition [B100]) is not applicable to substations under the exclusive control of electric utilities, it provides valuable guidance.

Fiber-optic cables in substations can be installed in the same manner as metallic conductor cables; however, this practice requires robust fiber-optic cables that can withstand normal construction handling and still protect the fibers inside. There are important differences to be considered in the handling and installation of fiber-optic cable, as compared to metallic conductor cable. In cable tray and trench, fiber-optic cable may be subjected to stress due to the weight of other cables which can induce microbending into the fiber-optic cable. Therefore, it is more-common practice to place the fiber-optic cable in a separate duct installed in the tray, trench or conduit (usually plastic), or use a cable construction with an integral duct. This not only protects the cable, but also allows easier identification from metallic cables.

Depending on the cable construction, the maximum allowable pulling tension on fiber-optic cable can vary from 200 N (45 lb) to more than 3000 N (680 lb). The maximum allowable tension for a particular fiber-optic cable should be obtained from the cable manufacturer. This maximum recommended pulling tension should be noted on any drawings, installation instruction, etc. The theory of pulling tension is the same for fiber-optic cable as it is for metallic conductor cable. Pulling tension can be calculated based on cable weight, conduit system design, and coefficient of friction.

Probably the most common installation mistake is making tight bends in the cable. Tight bends, kinks, knots, etc., in fiber cable can cause micro-cracking or growth of flaws in the fiber, with resulting loss of performance.

Minimum bending radius in fiber-optic cable is typically in the range of 20 times the cable diameter. This bending radius should be considered by the engineer when specifying conduit bends and pull box openings or sizing guide pulleys, sheaves, mid-assist capstans, etc.

Fiber-optic cables are often pulled for much longer distances than metallic conductor cables. These long pulls minimize the number of splices in fiber-optic cable which is desirable for fiber performance. The light weight of the cable, internal tension members, and tube or duct in the cable itself, makes these long pulls possible. Proper lubrication and good conduit installation are also necessities.

The special nature of fiber-optic cable pulling, i.e., long pull lengths and longer pull durations, require unique lubricants.

Lightweight fiber-optic cable rubs on all sides of the conduit through the natural undulation of long straight runs. Many common lubricants flow to the bottom of the raceway and lose effectiveness in this type of pulling.

As with metallic conductor cable, specific coefficients of friction depend on cable jacket type, conduit type, and the lubricant as well.

Short-length fiber-optic cable pulls may not require lubricant; however, for long or complex cable pulls, lubricant is critical to making an efficient, high quality installation. The requirements for fiber-optic cable pulling lubricant are the same as those for metallic conductor cable:

a) Compatibility with cable outer covering, tube, or duct

[11] For information on references, see Clause 2.

Copyright © 2008 IEEE. All rights reserved.

b) Complete and even coating on the cable for friction reduction at all friction points

c) Consistent low coefficient of friction (over time)

6.12 Acceptance testing (see Annex M)

Fiber-optic cable is tested for signal continuity and db signal strength after installation. This ensures that all connections have been performed properly, and the fiber has not been damaged during installation.

6.13 Recommended maintenance (see Annex N)

7. Power cable (ac and dc < 1 kV)

Low-voltage power cables are designed to supply power to utilization devices of the substation auxiliary systems rated 1000 V or less.

7.1 Service conditions (see Annex B)

Station service cable is likely to be exposed to open air at the transformer connections to the tray or weatherhead.

7.2 Cable selection (see Annex C)

7.2.1 Conductor sizing

See IEEE Std 835 for sizes based on ampacity and other factors.

7.2.2 Voltage rating

For power cables applied at 600 V and below, some use 1000 V rated insulation because of past insulation failures caused by inductive voltage spikes from de-energizing electromechanical devices, e.g., relays, spring winding motors. The improved dielectric strength of today's insulation materials prompted some utilities to return to using 600 V rated insulation for this application. Low-voltage power cable rated 600 V and 1000 V is currently in use.

7.3 Cable raceway design (see Annex E)

7.4 Routing (see Annex F)

7.5 Transient protection (see Annex G)

7.6 Electrical segregation (see Annex H)

Copyright © 2008 IEEE. All rights reserved.

Consideration should be given to insulation deformation when cable diameters differ greatly. When cable classifications are mixed, the power cable ampacity is calculated as if all the cables were power cables.

Segregating low-voltage power cables in the substation cable trench or cable tray system is generally not necessary.

7.7 Separation of redundant cable (see Annex I)

7.8 Cable pulling tension (see Annex J)

7.9 Handling (see Annex K)

7.10 Installation (see Annex L)

When single conductors are used in trays for two-wire or three-wire power circuits, cables should be trained and securely bound in circuit groups to prevent excessive movements caused by fault-current magnetic forces, and to minimize inductive heating effects in tray sidewalls and bottom.

Consideration of circuit voltage drop may lead to cables larger than the available space in typical service panels and connectors. This may lead to multiple conductors per phase, conductor reducing terminal connectors, or interior panel space and bending radius constraints.

7.11 Acceptance testing (see Annex M)

7.12 Recommended maintenance (see Annex N)

Low-voltage power cables may be insulation-resistance tested prior to connecting cables to equipment. These cables may be tested as part of the system checkout.

The low-voltage power cable insulation resistance tests should measure the insulation resistance between any possible combination of conductors in the same cable and between each conductor and station ground, with all other conductors grounded in the same cable.

8. Power cable (1 kV to 35 kV)

Medium-voltage power cables are designed to supply power to substation utilization devices, other substations, or customer systems rated higher than 1000 V.

NOTE—Oil-filled and gas-insulated cables are excluded from this definition and are not covered in this guide.[12]

The proper design of medium voltage power cable systems is dependent on many factors, including system nominal voltage, system fault level, voltage drop, conductor material, insulation and shielding material, type of ductwork (whether direct buried or in duct), phase spacing (and conductor spacing), phase arrangement,

[12] Notes in text, tables, and figures of a standard are given for information only and do not contain requirements needed to implement this standard.

Copyright © 2008 IEEE. All rights reserved.

number of conductors installed, method of shield grounding, earth thermal resistivity, ambient temperature, current loading, load cycling, and load factor. These factors make it prudent to consult industry codes.

Copyright © 2008 IEEE. All rights reserved.

8.1 Service conditions (see Annex B)

8.2 Cable selection (see Annex C)

8.2.1 Conductor sizing

Phase transposition and/or proximity heating should be considered for long runs of medium-voltage power cables. See IEEE Std 835.

8.2.2 Voltage rating

For medium-voltage cables, it is usual practice to select an insulation system that has a voltage rating equal to or greater than the expected continuous phase-to-phase conductor voltage. For solidly grounded systems, the 100% insulation level is typically selected, but the 133% insulation level may be selected where additional insulation thickness is desired. The 133% insulation level is also applied on systems without automatic ground fault protection.

8.2.3 Cable construction

A shield screen material is applied directly to the insulation and in contact with the metallic shield. It can be semiconducting material or, in the case of at least one manufacturer, a stress control material. At the high voltages associated with shielded cable applications, a voltage gradient would exist across any air gap between the insulation and shield. The voltage gradient may be sufficient to ionize the air, causing small electric arcs or partial discharge. These small electric arcs burn the insulation and eventually cause the cable to fail. The semiconducting screen allows application of a conducting material over the insulation to eliminate air gaps between insulation and ground plane.

Various shield screen material systems include the following:

a) Extruded semiconducting thermoplastic or thermosetting polymer

b) Extruded high-dielectric-constant thermoplastic or thermosetting polymer, referred to as a stress control layer

8.3 Cable raceway design (see Annex E)

8.4 Routing (see Annex F)

8.5 Transient protection (see Annex G)

The use of shielding and shield grounding of medium-voltage power cables is a common practice to reduce the hazard of shock to personnel; to confine the electric field within the cable; to minimize deterioration of cable insulation or jackets caused by surface discharges; and to minimize radio interference. The selection of the shield grounding locations and the effects of single and multiple grounds are points to be considered for the proper installation of shielded cable. The shielding recommendations contained in IEEE Std 575 should be followed.

Copyright © 2008 IEEE. All rights reserved.

8.6 Electrical segregation (see Annex H)

Medium-voltage power cables should be segregated from all other cables and installed so that their voltage cannot be impressed on any lower voltage system. Methods for achieving this segregation include the following:

a) Installation of medium-voltage cables in raceways that are separated from low-voltage power and control cables and from instrumentation cables. Installation of different voltage classes of medium-voltage power cables in separate raceways is also recommended. Cables installed in stacked cable trays should be arranged by descending voltage levels, with the higher voltages at the top.

b) Utilization of armored shielded cables (separate raceways are still recommended).

8.7 Separation of redundant cable (see Annex I)

8.8 Cable pulling tension (see Annex J)

For additional information on pulling of dielectric power cables, see AEIC CG5-2005 [B1].

8.9 Handling (see Annex K)

8.10 Installation (see Annex L)

The ends of medium-voltage power cables should be properly sealed during and after installation.

8.11 Acceptance testing (see Annex M)

Shielded and unshielded medium-voltage cables should not be subjected to high-voltage dc tests; insulation resistance tests are recommended (IEEE Std 400™-2001 [B53]).

8.12 Recommended maintenance (see Annex N)

9. Other cables (future)

Copyright © 2008 IEEE. All rights reserved.

Annex A

(informative)

Flowchart

Figure A.1 shows the flowchart process for design and installation of cable systems in substations.

Copyright © 2008 IEEE. All rights reserved.

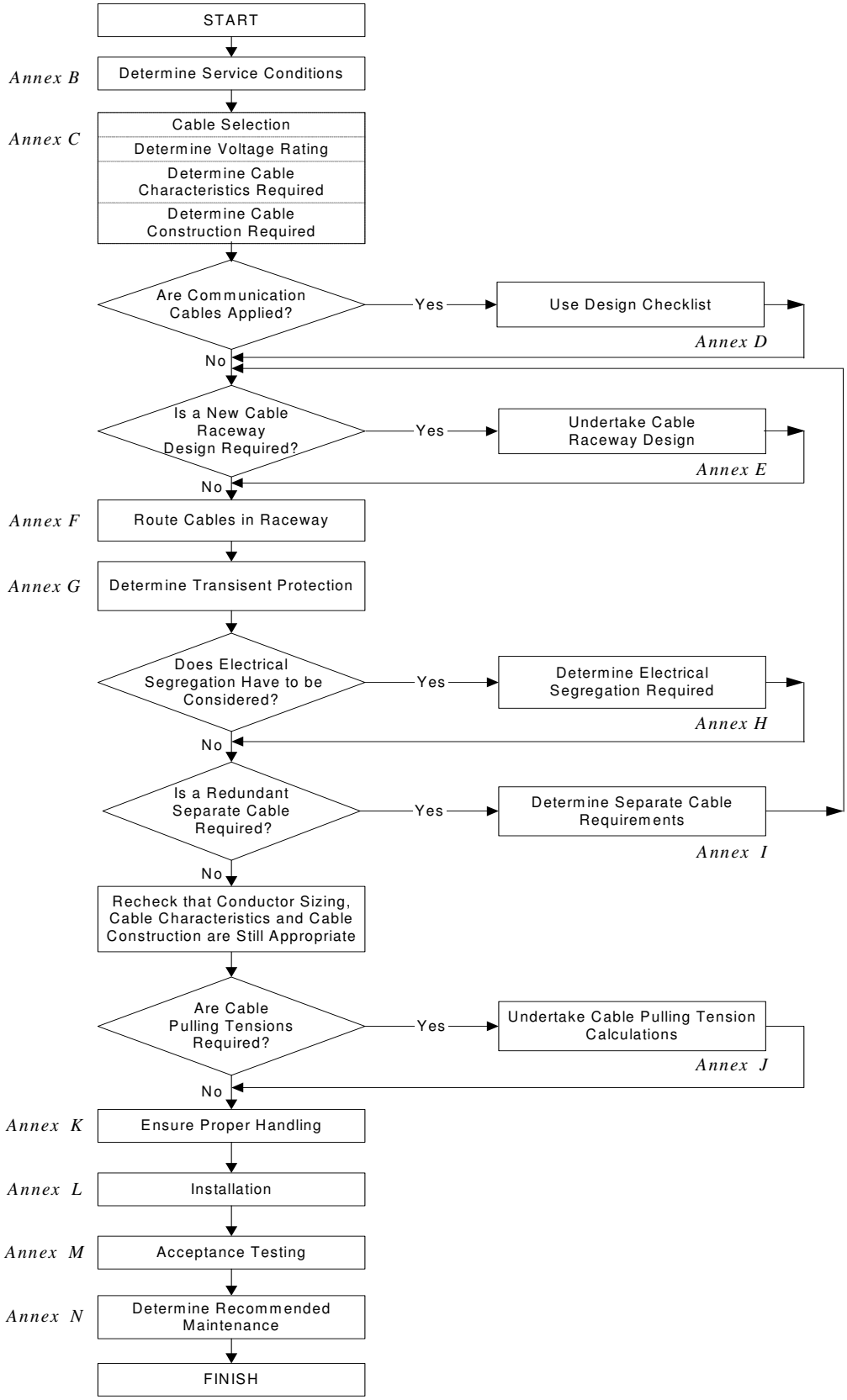

Figure A.1—Flowchart process for design and installation of cable systems in substations

Copyright © 2008 IEEE. All rights reserved.

Annex B

(normative)

Service conditions

a) Cables should be suitable for all environmental conditions that occur in the areas where they are installed (see ICEA and NEMA standards on cable for information concerning cable ratings).

b) Cable operating temperatures in substations are normally based on 40 °C ambient air or 20 °C ambient earth. Special considerations should be given to cable installed in areas where ambient temperatures differ from these values.

c) Cables may be direct buried, installed in duct banks, conduits, and trenches below grade, or in cable trays, conduits, and wireways above ground. Cable should be suitable for operation in wet and dry locations.

d) The service life of the cable should be at least equal to the design life of the substation.

Copyright © 2008 IEEE. All rights reserved.

Annex C

(normative)

Cable selection

This annex provides guidance for cable selection for various types of installations. The proper design of cable systems requires the consideration of many factors. These factors include ambient temperature, conductor temperature, earth thermal resistivity, load factor, current loading, system fault level, voltage drop, system nominal voltage and grounding, method of installation, and number of conductors being installed.

C.1 Conductor

The cable conductor is selected based upon cost-efficient material, industry sizes, to meet ampacity requirements, voltage drop, and short-circuit criteria. The selection of power cables may include consideration of the cost of losses.

C.1.1 Material

One of the most important properties of a conductor material is its conductivity. In 1913, the International Electrotechnical Commission adopted the International Annealed Copper Standard (IACS) that set the conductivity of copper to be 100. Conductors are typically specified based on this standard.

Copper conductor may be uncoated or coated with tin, lead alloy, or nickel. Normally uncoated conductor is used, but coated conductor may be used to ease stripping of the insulation from the conductor and to make soldering easier. Note that soldering is not a typical termination method for utilities.

Aluminum conductor is usually electrical conductor grade, which has a volume conductivity of approximately 61% that of copper. For the same diameter, aluminum conductors have a lower conductivity than copper. Aluminum's advantage is a 20% lower mass for equivalent conductivity.

Control and instrumentation cable conductor is almost always copper. Aluminum conductor should be considered for larger power cables. Factors that influence the selection of either copper or aluminum for conductors include:

a) Aluminum metal has historically been less expensive than copper.

b) Aluminum conductor terminations require special treatment, copper terminations do not.

c) For equivalent ampacity, aluminum conductor has a lower mass that makes it easier to handle for larger cable sizes.

d) For equivalent ampacity, copper conductor is smaller and can be installed in smaller raceways.

C.1.2 Size

Conductor size is measured by its cross-sectional area expressed in circular mils (cmil) or mm^2. One circular mil is defined as the area of a circle 1 mil (0.001 in) in diameter. In North America, conductors below 250 kcmil are assigned American Wire Gauge (AWG) numbers for easy reference. The AWG number increases as the cross-sectional area decreases.

$1 \text{ cmil} = 5.067 \times 10^{-4} \text{ mm}^2 \ (0.7854 \times 10^{-6} \text{ in}^2)$

Conductor size is selected to meet ampacity, voltage drop, and short-circuit criteria. The selection of power cables may include consideration of the cost of losses.

Copyright © 2008 IEEE. All rights reserved.

C.1.3 Construction

Conductors may be either solid or stranded. Solid conductors may be used for sizes up to 12 AWG. Solid conductors larger than this would be stiff and difficult to install, therefore stranded construction is normally used for these larger conductors.

The number of strands and size of each strand for a given size is dependent on the use of the conductor. ASTM B 8-2004 [B4] defines the number and size of conductor stranding. Common stranding classes are summarized in Table C.1. The number of strands per conductor is standardized and is summarized in Table C.2. Class B stranding is normally used for substation installations.

Table C.1—Conductor stranding

Class	Use
B	Power cables
C	Power cables, where more flexible stranding than Class B is desired
D	Power cables where extra flexible stranding is desired
G	All cables for portable use
H	All cables where extreme flexibility is required, such as for use on take-up reels, etc.
I	Apparatus cables and motor leads
K	Cords and cables composed of 30 AWG copper wires.
M	Cords and cables composed of 34 AWG copper wires.

Table C.2—Stranding construction

Class	14-2 AWG	1-4/0 AWG	250–500 MCM
B	7	19	37
C	19	37	61
D	37	61	91
G	49	133	259
H	133	259	427

C.2 Ampacity

C.2.1 Ampacity for power cables

The ampacity of a cable depends on the temperature of the surrounding air or earth, and the temperature rise of the cable materials. The maximum temperature usually occurs at the conductor-insulation interface. The maximum allowable insulation temperature limits cable ampacity.

Maximum allowable insulation temperature has been determined through testing and experience for the commonly used materials and is a function of time. For example, for XLPE insulation, 90 °C is the maximum acceptable continuous temperature, 130 °C is the maximum for the duration of an emergency, and 250 °C is the maximum for very short time durations (e.g., short circuits). The steady-state load, short-time cyclic load, emergency load and fault conditions are usually considered in determining the ampacity required for a cable.

Losses (I^2R) in the conductor and magnetically induced losses in the insulation shield and the raceway are the principal causes of the insulation temperature rise. Shields or sheaths that are grounded at more than one

Copyright © 2008 IEEE. All rights reserved.

point may carry induced circulating currents and reduce the ampacity of the cable. The magnitude of circulating currents flowing in shields grounded at more than one point depends on the mutual inductance between the cable shielding and the cable conductors, the mutual inductance to the conductors in other cables, the current in these conductors, and the impedance of the shield.

Below-grade cables are usually installed in trench or duct, or direct buried. Above-grade cables are usually installed in conduit, wireway, tray, or suspended between supports. Cables may be routed through foundations, walls, or fire barriers, and raceway may be partially or totally enclosed. The installation that results in the highest insulation temperature should be used to determine the ampacity of a cable routed through several configurations.

If a number of cables are installed in close proximity to each other and all are carrying current, each cable will be derated. The reason for derating is reduced heat dissipation in a group of cables, compared with a single isolated cable or conduit. Group correction factors should be used to find reduced ampacity of cables in the group.

The cable materials themselves can affect heat transfer and ampacity. For example, the thermal conductivity of EPR is lower than that of XLPE, and the ampacity of the EPR cable will be less for the same insulation thickness.

The thermal conductivity of earth surrounding below grade cables is one of the most important parameters in determining ampacity. There is significant variation of earth thermal conductivity with location and time, and IEEE Std 442™-1991 [B55] provides guidance for earth conductivity measurements. However, many engineers have found it acceptable to use typical values. For a typical loam or clay containing normal amounts of moisture, the resistivity is usually in the range of 60 °C cm/W to 120 °C cm/W. When the earth resistivity is not known, a value of 90 °C cm/W is suggested in IEEE Std 835.

The ampacity of below-grade cable is also dependent upon the load factor, which is the ratio of the average current over a designated period of time to the peak current occurring in that period. Ampacities for typical load factors of 50%, 75%, and 100% are given in IEEE Std 835.

Methods for determining ampacity and the tables of ampacities for a large number of typical cable and below-grade and above-grade installation configurations are included in IEEE Std 835. In addition, IEEE Std 835 includes guidance for determining ampacities for configurations not included in the tables.

Finite element techniques have been used to calculate below grade cable ampacity. These techniques will allow the designer to account for specific cable construction and installation details.

C.2.2 Ampacity for other cables

Ampacity of protection and control type cables are determined using applicable national codes. For example, in the United States, the NEC [B100] could be used.

Most codes include derating factors that account for multiple conductors per raceways. However, for randomly installed cables in tray the industry accepted method for determining ampacity is given in NEMA WC 51-2003/ICEA P-54-440 [B95].

Cable ampacity should be equal to or larger than the trip rating of the rating of the circuit overload protection, which is typically 1.25 times the expected circuit load.

C.3 Voltage drop

Voltage drop should be considered when selecting conductor size. The voltage drop requirements should be such that the equipment operates within its design limits. Voltage drop for motor feeders should be considered for both starting and running conditions to ensure the motor operates within its design limits.

Copyright © 2008 IEEE. All rights reserved.

Voltage drop is calculated according to Equation (C.1) as follows:

$$\Delta V = V_S - V_L \tag{C.1}$$

where

ΔV is the voltage drop
V_S is the source voltage
V_L is the load voltage

An exact solution for calculating voltage drop may be determined using Equation (C.2a); however, an iterative approach is required since the load voltage is not typically known.

$$V_S = \sqrt{(V_L \cos\theta + IR)^2 + (V_L \sin\theta + IX)^2} \tag{C.2a}$$

where

I is the load current
R is the conductor resistance
X is the conductor reactance
θ is the load power factor angle

Rather, in this case the voltage drop can be approximated based on conductor impedance and load current using Equation (C.2b) as follows:

$$\Delta V = V_S - V_L = IR\cos\theta + IX\sin\theta \tag{C.2b}$$

Equation (C.2b) is not suitable for power factors less than approximately 70%, such as for motor starting or larger cables with high reactance. For situations like this, Equation (C.2a) may be used. Alternatively, computer software may be used to determine the exact solution. Hand calculations will typically be done using the approximate solution.

Voltage drop is commonly expressed as a percentage of the source voltage. An acceptable voltage drop is determined based on an overall knowledge of the system. Typical limits are 3% from source to load center, 3% from load center to load, and 5% total from source to load.

Voltage drop is normally based on full load current. However, there is often diversity in the load on lighting and receptacle circuits, and the actual load that may occur on a receptacle circuit can not be accurately predicted. In calculating receptacle circuit load for determination of conductor size, a value of 60% of the receptacle rating is often used, unless the actual load is known.

The calculation of voltage drop requires knowledge of the conductor's impedance determined as detailed in the following clause. It is recommended that a voltage drop be calculated initially at the maximum conductor operating temperature because the ampacity is based on this too. In cases where a cable will be sized based on voltage drop and one size is marginal for voltage drop, voltage drop may be recalculated at the expected cable operating temperature.

C.3.1 Cable impedance

The impedance of a cable may be determined from tables or by calculation. Calculations are commonly used for larger size, high current cables since there may be many variables that affect the impedance. For small conductor sizes, table values may be used with only a small error.

Copyright © 2008 IEEE. All rights reserved.

Table C.3 provides parameters for common substation cables. For other sizes, refer to manufacturer catalogs.

Table C.3—Parameters for common substation cables (600 V insulation)

Conductor size		Rdc [a] (mΩ/m)	Rdc [a] (Ω/1000′)	Number of conductors	90 °C ampacity (A)	Approximate outside diameter (OD)			
						Nonshielded		Shielded	
(AWG)	(cmil)					(mm)	(in)	(mm)	(in)
18	1620	26.08	7.95	2	14	8.4	0.330	10.2	0.400
				4	11.2	9.7	0.380	11.3	0.445
				7	9.8	11.4	0.450	13.1	0.515
				12	7	15.7	0.620	17.3	0.680
				19	7	18.3	0.720	19.8	0.780
16	2580	16.37	4.99	2	18	9.0	0.355	10.7	0.420
				4	14.4	10.4	0.410	12.1	0.475
				7	12.6	12.3	0.485	14.7	0.580
				12	9	16.9	0.665	18.5	0.730
				19	9	19.7	0.775	21.3	0.840
14	4110	10.30	3.14	2	25	9.7	0.380	11.3	0.445
				4	20	11.2	0.440	12.8	0.505
				7	17.5	13.2	0.520	15.7	0.620
				12	12.5	18.3	0.720	19.9	0.780
				19	12.5	21.3	0.840	24.0	0.945
12	6530	6.50	1.98	2	30	10.7	0.420	12.3	0.485
				4	24	12.3	0.485	14.7	0.580
				7	21	15.6	0.615	17.1	0.675
				12	15	20.3	0.800	23.0	0.905
				19	15	24.8	0.975	26.4	1.040
10	10 380	4.07	1.24	2	40	11.9	0.470	13.6	0.535
				4	32	14.6	0.575	16.3	0.640
				7	28	17.5	0.690	19.1	0.750
				12	20	24.0	0.945	25.7	1.010
8	16 510	2.55	0.78	1	55	7.1	0.280	10.4	0.410
				2	55	16.0	0.630	17.7	0.695
				3	55	17.0	0.670	18.5	0.730
				4	44	18.7	0.735	20.3	0.800
6	26 240	1.61	0.49	1	75	8.9	0.350	11.4	0.450
				2	75	18.0	0.710	19.7	0.775
				3	75	19.2	0.755	20.8	0.820
				4	60	21.1	0.830	23.7	0.935
4	26 240	1.01	0.31	1	95	10.2	0.400	12.7	0.500
				2	95	20.6	0.810	23.2	0.915
				3	95	23.0	0.905	24.5	0.965
				4	76	25.1	0.990	26.8	1.055
2	66 360	0.636	0.194	1	130	11.8	0.465	15.0	0.590
				2	130	24.8	0.975	26.3	1.035
				3	130	26.3	1.035	27.9	1.100
				4	104	29.0	1.140	30.5	1.200

Copyright © 2008 IEEE. All rights reserved.

Table C.3—Parameters for common substation cables (600 V insulation) *(continued)*

Conductor size		Rdc [a] (mΩ/m)	Rdc [a] (Ω/1000′)	Number of conductors	90 °C ampacity (A)	Approximate outside diameter (OD)			
						Nonshielded		Shielded	
(AWG)	(cmil)					(mm)	(in)	(mm)	(in)
1/0	105 600	0.400	0.122	1	170	15.1	0.595	17.5	0.690
				2	170	30.0	1.180	31.5	1.240
				3	170	31.8	1.250	33.5	1.320
				4	136	35.2	1.385	36.8	1.450
2/0	133 100	0.317	0.097	1	195	16.3	0.640	18.7	0.735
				2	195	32.3	1.270	33.8	1.330
				3	195	34.4	1.355	36.1	1.420
				4	156	38.0	1.495	39.6	1.560
4/0	211 600	0.199	0.061	1	260	19.2	0.755	21.6	0.850
				2	260	38.0	1.495	39.5	1.555
				3	260	40.5	1.595	42.2	1.660
				4	208	46.5	1.830	48.1	1.895

[a] Ampacities and RDC are based on 90 °C conductor temperature and a 30 °C ambient.
[b] Ampacities are for raceways, cable, or earth (directly buried).
[c] For four-conductor cables where only three conductors are carrying current, the ampacity for a three-conductor cable may be used.
[d] For ambient temperatures of other than 30 °C, the correction factors under Table 310-16 of the NEC [B100] should be used.

C.3.1.1 DC resistance

The first step to determine the impedance is to calculate the dc resistance of the conductor. This may be found from manufacturer's published information, from tables such as the NEC [B100] and NEMA WC 57-2004/ICEA S-73-532 [B96], or estimated using Equation (C.3). Equation (C.3) is valid for a temperature range of approximately 100 °C. When using tables, it may be necessary to adjust the values to account for a different operating temperature or cable type.

$$R_{\mathrm{dc}} = \rho_1 \tfrac{1}{A}\left[1+\alpha_1\left(t_2-t_1\right)\right]F_S F_L \quad \mu\Omega/\mathrm{m}\ (\mu\Omega/\mathrm{ft}) \tag{C.3}$$

where

ρ_1 is the resistivity of material at temperature t_1 from Table C.4
A is the conductor area in mm^2 (cmil)
α_1 is the temperature coefficient at temperature t_1 from Table C.4
F_S is the stranding factor, typically 1.02 for stranded conductor and 1.0 for solid conductor
F_L is the stranding lay factor, typically 1.04 for stranded conductor and 1.0 for solid conductor
t_1 is the base temperature for other parameters 20 °C (68 °F)
t_2 is the cable operating temperature in degrees Celsius (degrees Fahrenheit)

Copyright © 2008 IEEE. All rights reserved.

Table C.4—Parameters for dc resistance

Conductor material	Parameter	Metric (size in cmil)	Metric (size in mm^2)	Imperial (size in cmil)
Copper (100% IACS)	ρ_1 [t_1 = 20 °C (68 °F)]	34.026 Ω cmil/m	0.017241 Ω mm^2/m	10.371 Ω cmil/ft
	α_1	0.00393/°C	0.00393/°C	0.00218/°F
Aluminum (61% IACS)	ρ_1 [t_1 = 20 °C (68 °F)]	55.781 Ω cmil / m	0.028265 Ω mm^2/m	17.002 Ω cmil/ft
	α_1	0.00403/°C	0.00403/°C	0.00224/°F

Equation (C.4) is used to calculate the resistance for a specific length of conductor as follows:

$$R_{\mathrm{dc}} = \rho_1 \tfrac{L}{A}\left[1+\alpha_1\left(t_2-t_1\right)\right]F_S F_L \times 10^{-6} \quad (\Omega) \tag{C.4}$$

where the parameters are the same as Equation (C.3) and Table C.4 except

L is the conductor length in meters (feet)

In many cases, there is a need to determine the size for a desired resistance. Equation (C.4) may be rearranged to calculate the area, and for convenience is given as the following Equation (C.5):

$$A = \rho_1 \tfrac{L}{Rdc}\left[1+\alpha_1\left(t_2-t_1\right)\right]F_S F_L \times 10^{-6} \quad \mathrm{mm}^2\,(\mathrm{cmil}) \tag{C.5}$$

C.3.1.2 AC resistance

For ac circuits, the conductor resistance increases due to several factors that include conductor skin effect, conductor proximity effect, shield eddy currents, shield circulating currents, and steel conduit losses. The ac resistance is determined from the following Equation (C.6).

$$Rac = Rdc\ (1 + Ycs + Ycp + Yse + Ysc + Yp) \tag{C.6}$$

where

Rdc is the dc resistivity at reference temperature μΩ/m (μΩ/ft)
Ycs is the conductor skin effect
Ycp is the conductor proximity effect
Yse is the shield eddy current
Ysc is the shield circulating current
Yp is the steel conduit losses

Note the factors used to calculate *Rac* are based on a per-unit resistance measured in micro-ohms/meter (micro-ohms/foot).

C.3.1.2.1 Conductor skin effect—*Ycs*

The skin effect is caused by the varying current intensity that results in varying inductance through a conductor's cross section. The inductance is maximum at the center of the conductor and minimum on the

Copyright © 2008 IEEE. All rights reserved.

surface. Skin effect varies with temperature, frequency, stranding and coating, and can typically be ignored for cables 350 kcmil and smaller (less than 1% impact). The skin effect factor is approximated using Equation (C.7a) for *Rdc* in μΩ/m, and Equation (C.7b) for *Rdc* in μΩ/ft.

$$Ycs = \frac{11}{\left(\frac{R_{\mathrm{dc}}}{3.28k_S} + \frac{13.124}{R_{\mathrm{dc}}/k_S} - \frac{25.27}{(R_{\mathrm{dc}}/k_S)^2}\right)^2} \tag{C.7a}$$

$$Ycs = \frac{11}{\left(\frac{R_{\mathrm{dc}}}{k_S} + \frac{4}{R_{\mathrm{dc}}/k_S} - \frac{2.56}{(R_{\mathrm{dc}}/k_S)^2}\right)^2} \tag{C.7b}$$

where

k_S is a constant from Table C.5

Table C.5—Recommended values for k_S and k_P

Conductor type	Coating	k_S	k_P
Concentric round	None, tin or alloy	1.0	1.0
Compact round	None	1.0	0.6
NOTE—This table is a summary of Table II by Neher and McGrath [B86].			

C.3.1.2.2 Conductor proximity effect—*Ycp*

This effect is due to the force developed by currents flowing in the same direction in adjacent conductors, which concentrates electrons in the remote portions of a conductor. *Ycp* increases as spacing between conductors is decreased. The factor is calculated using Equation (C.8), Equation (C.9a), and Equation (C.9b).

$$Ycp = f(xp)\left(\frac{D_C}{S}\right)^2\left(\frac{1.18}{f(xp)+0.27} + 0.312\left(\frac{D_C}{S}\right)^2\right) \tag{C.8}$$

where

$f(xp)$ is calculated according to Equation (C.9a) for metric units or Equation (C.9b) for imperial units
k_P is a constant from Table C.5
D_C is the diameter of the conductor in millimeters (inches)
S is the center-to-center spacing of conductors in millimeters (inches)

Copyright © 2008 IEEE. All rights reserved.

For metric units

$$f(xp) = \frac{11}{\left(\frac{Rdc}{3.28kp} + \frac{13.124}{Rdc/kp} - \frac{25.27}{(Rdc/kp)^2}\right)^2} \tag{C.9a}$$

For imperial units

$$f(xp) = \frac{11}{\left(\frac{Rdc}{kp} + \frac{4}{Rdc/kp} - \frac{2.56}{(Rdc/kp)^2}\right)^2} \tag{C.9b}$$

C.3.1.2.3 Shield eddy currents—*Yse*

These losses are negligible except in power cables. Losses are produced in cable shields due to eddy currents produced in the shield as a function of conductor proximity. Equations for calculating these losses are given in the Neher and McGrath reference [B86].

C.3.1.2.4 Shield circulating currents—*Ysc*

This is significant for single conductor, shielded cables spaced apart. Circulating currents will flow in cable shields when they are grounded at both ends. This is accounted for by the factor *Ysc*, calculated using Equation (C.10) as follows:

$$Ysc = \frac{R_S}{R_{\mathrm{dc}}}\left(\frac{X_M{}^2}{X_M{}^2 + R_S{}^2}\right) \tag{C.10}$$

where

R_S is the dc resistance of conductor sheath in μΩ/m (μΩ/ft)
X_M is the mutual inductance of shield and conductor in μΩ/m (μΩ/ft)

The value of X_M is dependent on the cable configuration. Equation (C.11a) or Equation (C.11b) may be used for the typical situation where three single conductors are in the cradled configuration in a duct for 60 Hz. See Neher and McGrath [B86] for other situations.

For metric units

$$X_M = 173.6\log_{10}\left(\frac{2S}{D_{SM}}\right) \quad (\mu\Omega/\mathrm{m}) \tag{C.11a}$$

For imperial units

$$X_M = 52.92\log_{10}\left(\frac{2S}{D_{SM}}\right) \quad (\mu\Omega/\mathrm{ft}) \tag{C.11b}$$

Copyright © 2008 IEEE. All rights reserved.

where

S is the axial spacing of adjacent cables in millimeters (inches)

D_{SM} is the mean diameter of the shield in millimeters (inches)

C.3.1.2.5 Losses in steel conduits—*Yp*

The magnetic field from current in cables causes hysteresis and eddy current losses in the steel conduit. This heats the conduit and raises the conductor temperature. When all three phases are in a conduit, the magnetic field is significantly reduced due to phase cancellation. For a single conductor cable, there is no cancellation and the heating is significant so this situation should be avoided. Loss factor may be calculated using Equation (C.12a) for metric values and Equation (C.12b) for imperial values.

For metric units

$$Y_P = \frac{6.89S - 0.89D_P}{R_{\mathrm{dc}}} \tag{C.12a}$$

For imperial units

$$Y_P = \frac{0.89S - 0.115D_P}{R_{\mathrm{dc}}} \tag{C.12b}$$

where

S is the center-to-center line spacing between conductors in millimeters (inches)

D_P is the inner diameter of conduit in millimeters (inches)

C.3.1.3 Reactance

The reactance of a cable is a function of the spacing between conductors and the conductor diameter. Reactance is zero for dc circuits and insignificant for cable sizes less than 4/0 AWG. For a three-phase circuit, the per-phase reactance is given by Equation (C.13a) or Equation (C.13b). For a two-wire, single-phase circuit, the reactance will be twice that given by Equation (C.13a) or Equation (C.13b).

For metric units

$$X = 2\pi f\,(0.4606\log_{10}\left(S'/r_C\right) + 0.0502) \quad \mu\Omega/\mathrm{m/phase} \tag{C.13a}$$

For imperial units

$$X = 2\pi f\,(0.1404\log_{10}\left(S'/r_C\right) + 0.0153) \quad \mu\Omega/\mathrm{ft/phase} \tag{C.13b}$$

where

f is frequency in hertz

$S' = \sqrt[3]{A * B * C}$ for the configurations shown in Figure C.1 in millimeters (inches)

r_C is the radius of bare conductor in millimeters (inches)

Copyright © 2008 IEEE. All rights reserved.

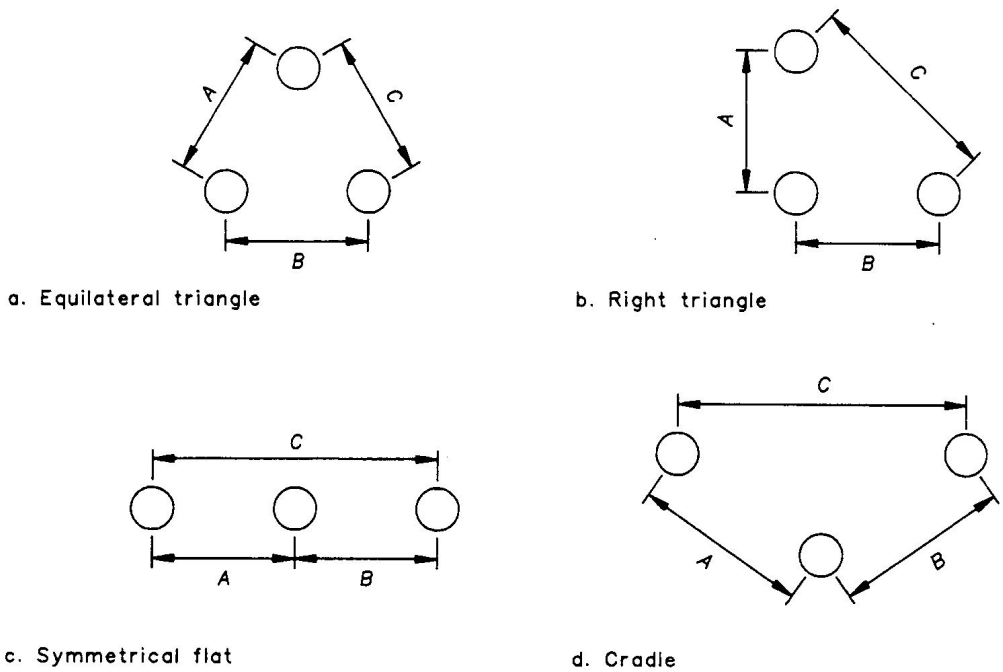

Figure C.1—Common cable configurations

C.3.2 Load

Information on the load being supplied is required. Typically load current and power factor are required. Consideration should be given to whether the type of load is constant current, constant power or constant impedance. The characteristics of the different load types are summarized in Table C.6. It is recommended that current be determined for the desired load voltage. If the current is available only for a specific voltage, then the current may be estimated using the formula in Table C.6.

Table C.6—Load characteristics

Load type	Examples	Characteristics	Estimating for different voltage
Constant power	Motors—full load lighting	$V\uparrow$ and $I\downarrow$ or $V\downarrow$ and $I\uparrow$	$I_{new} = I_{old}\ (V_{old}/V_{new})$
Constant impedance	Motor starting heating	I varies with voltage	$I_{new} = I_{old}\ (V_{new}/V_{old})$

C.4 Short-circuit capability

All cables should be checked to ensure they are capable of carrying the available fault current. The short-circuit rating of an insulated conductor is based on the maximum allowable conductor temperature and insulation temperature.

Conductor temperature is dependent on the current magnitude and duration. Equation (C.14) is used to estimate conductor temperature and is valid only for short durations. The maximum recommended conductor temperature is 250 °C to prevent conductor annealing.

Copyright © 2008 IEEE. All rights reserved.

$$I_{SC} = A\sqrt{\frac{486.9}{t_F}\log_{10}\left(\frac{T_2 + K_0}{T_1 + K_0}\right)} \quad \text{(amperes)} \tag{C.14}$$

where

I_{SC} is the symmetrical short-circuit current in amperes
A is the conductor area in square millimeters
K_0 is the inverse of material temperature coefficient at 0 °C per Table C.7
t_F is the duration of fault in seconds
T_1 is the conductor temperature before the fault in degrees Celsius
T_2 is the conductor temperature after fault in degrees Celsius

Table C.7—Parameters for Equation (C.14)

Conductor type	K_0
Copper, 100% IACS	234.5
Aluminum, 61% IACS	228.1

In most cases the short-circuit current is known and the required conductor area needs to be determined, and Equation (C.15a) and Equation (C.15b) may be used.

For metric units

$$A = \frac{I_{SC}}{\sqrt{\frac{486.9}{t_F}\log_{10}\left(\frac{T_2 + K_0}{T_1 + K_0}\right)}} \quad \text{mm}^2 \tag{C.15a}$$

For imperial units

$$A = \frac{I_{SC}}{\sqrt{\frac{0.0125}{t_F}\log_{10}\left(\frac{T_2 + K_0}{T_1 + K_0}\right)}} \quad \text{cmil} \tag{C.15b}$$

The maximum insulation temperature is dependent on the material used. Table C.8 lists maximum temperatures for common insulation materials.

Table C.8—Insulation material temperature ratings

Insulation material	Short-circuit temperature rating (°C)
XLPE and EPR	250
SR	300
Paper, rubber, varnish cambric	200
PE, PVC	150

Copyright © 2008 IEEE. All rights reserved.

C.5 Insulation

The selection of the cable insulation system also includes consideration of cost and performance under normal and abnormal conditions. Dielectric losses, resistance to flame propagation, and gas generation when burned are the most common performance considerations.

C.5.1 Voltage rating

The selection of the cable voltage rating is based on the service conditions of Annex B, the electrical circuit frequency, phasing, and grounding configuration, and the steady-state and transient conductor voltages with respect to ground and other energized conductors.

A voltage rating has been assigned to each standard configuration of insulation material and thickness in NEMA WC 57/ICEA S-73-532 [B96]. The selected voltage rating should result in a cable insulation system that maintains the energized conductor voltage, without installation breakdown under normal operating conditions.

C.5.2 Thermal stability

The cable should maintain its required insulating properties when subjected to its rated thermal limit (the combination of its maximum ambient temperature and its own generated heat) during the service life.

In some cable installations, specifications may call for safe operation under high-temperature conditions. PE has a maximum service temperature of 80 °C, and, therefore, it should be replaced by other dielectrics where high-temperature operation is required. Chlorosulfonated PE (CSPE) is normally only rated up to 90 °C, so better choices include XLPE or EPR. SR compound has been used in high-temperature cables (as high as 200 °C), or where cable fire propagation is a consideration.

Outdoor cables are typically insulated with heat resistant thermoplastic (designated THWN) and rated up to 75 °C. Typical indoor cables (designated THHN) are rated to 90 °C.

C.5.3 Moisture resistance

The cable should maintain its required insulating properties for its service life when installed in wet locations, especially underground.

C.5.4 Chemical resistance

The cable should maintain its required insulating properties when exposed to chemical environments. The cable manufacturer should be consulted for recommendations for specific chemical requirements to which the cable may be exposed.

C.5.5 Flame propagation resistance

Cables installed in open or enclosed cable trays, wireways, or in other raceway systems where flame propagation is of concern should pass the IEEE Std 1202™-1991 [B68] flame tests.

C.6 Jacket

The cable jacket, or outer covering (if any), is selected to meet mechanical protection, fire resistance, and environmental criteria, or to provide a moisture barrier for the insulation system.

Copyright © 2008 IEEE. All rights reserved.

C.6.1 Material

Jacket covering may consist of thermoset materials such as cross-linked chlorinated PE (CPE) or chlorosulfonated polyethylene (CSPE), thermoplastic materials such as PVC, and/or metal armor such as aluminum interlocked armor, galvanized steel interlocked armor, continuous smooth or corrugated extruded aluminum armor, or continuously welded smooth or corrugated metallic armor with or without an overall nonmetallic sheath. All thermoset and thermoplastic jacket covering materials shall be selected suitable for the conductor insulation temperature rating and the environment in which they are to be installed. Other acceptable jacket cover materials include cross-linked polychloroprene (PCP) or cross-linked polyolefin (XLPO). In the past, lead sheaths were commonly used, but are being phased out due to the adverse effects of lead in the environment.

C.6.2 Markings

The jacket should be marked in a permanent fashion approximately every meter (few feet) with the following recommended information: consecutive length, year of manufacture, cable type.

C.7 Attenuation

Attenuation is a ratio comparing the power of the signal at the beginning and the end of a communication cable. Attenuation is measured in decibels per unit length and indicates the loss of signal in the cable.

C.8 Cable capacitance

Cable capacitance is the ability of cable to store electrical charge. Capacitance is measured in picofarads per unit length. High capacitance of communication cables slows down the signals. High capacitance of long control cables, 60 m and more (200 ft), may lead to transient overvoltages over circuit elements (relay coils, contacts etc.) during switching of the circuit, resulting in the damage to these elements.

Copyright © 2008 IEEE. All rights reserved.

Annex D

(informative)

Design checklist for communication cables

The following is a design checklist for communications cable applications within a substation.

D.1 Pre-design

- Determine the equipment data transfer capacity and speed requirements (refer to IEEE Std 487-2000 [B56] and IEEE Std 1590 [B71] for more information on requirements). This information is usually obtained from the hardware or device manufacturer.

- Determine the level of reliability or operations integrity required for the individual system. This information may be available from company policy documents or specific engineering or design standards.

D.2 Communications requirements

- Determine service types and service performance objective classifications per IEEE Std 487-2000 [B56].

- Establish the number of POTS (plain old telephone service) lines needed.

  — What is the number of voice circuits (normal and emergency)?

  — Are any extensions into the substation or switchyard required?

  — How many dial-up circuits are needed?

    a) Revenue meters

    b) Transient fault recorder or protective relay interrogation

    c) Security or fire alarms

  — What dedicated telephone circuits are needed?

    a) Remote SCADA terminals

    b) Protective relay tripping schemes

- Is circuit-sharing equipment needed to limit the number of dial-up circuits?

- Define special requirements for coaxial cable [antennas or capacitive voltage transformers (CVTs)], CAT-5, or other application specific requirements for particular hardware.

Copyright © 2008 IEEE. All rights reserved.

D.3 Cable protection requirements

- Determine the GPR and fault current levels for the site. This information is often obtained through other departments (e.g., planning department).
- Define the level of protection required for EMF interference (shielding).
- What level of physical security is needed (e.g., should cabling from the ROW (right of way) be enclosed in a rigid conduit in high risk areas)?
- Is the cable required to meet special application criteria (e.g., specific outer jacket design due to corrosive atmosphere, coal generation, or industrial processes nearby)?

D.4 Site conditions

- Can common routes/runs be used (e.g., the communications circuits run isolated from, but in the same duct bank as, station service power)?
- Are easements required for the telephone company or service provider?

D.5 Interface with telephone company/service provider

- Contact the telephone company or service provider with information from D.1 through D.4.
- Determine the number and types of circuits, including service types and service performance objective classifications for each circuit.
- Determine the number of circuit protective devices required for the determined GPR. Generally one protective device is required per circuit. Note that short fiber optic links eliminate the need for GPR protective devices; however, the cost of fiber to hard wire/copper multiplex equipment may be cost prohibitive for a small substation.
- Request the telephone company/service provider installation costs for their equipment, services and interconnection at the nearest public right-of-way.
- Request the telephone company/service provider describe the monthly costs for all leased or rented circuits (POTS, dedicated circuits, high-speed interconnections).
- Define the equipment to be provided by the telephone company/service provider and by the substation owner.
- Obtain the telephone company/service provider's construction requirements for cabling and wallboard standards.
  - Is the owner required to provide a conduit/raceway from the public ROW?
  - What type terminal blocks will be used?
  - Should the wallboard be ply-metal or another material?
  - What is needed to mount telephone company/service provider terminal blocks?
  - Is a dedicated 120 V (ac) or 125 V (dc) power source needed?

Copyright © 2008 IEEE. All rights reserved.

D.6 Cost considerations

- Prepare an economic cost summary including the following:
  - Installation labor costs for the telephone company/service provider, internal utility company personnel, and independent contractors.
  - Equipment costs for the hardware, GPR circuit protection, wallboard, circuit or cable runs past the telephone company/service provider's terminal blocks, grounding, etc.
  - Total monthly rental costs
- Examine possible alternatives and their associated economics, e.g., microwave link for protective relay tripping schemes, fiber optics for high-speed SCADA data transfer, or relay interrogation.

D.7 Communications system design

- Develop a basis of design for the complete system. There may be general utility specifications and design criteria based upon experience and regional design criteria.
- Prepare a block diagram detailing the equipment locations (telephone board, network router, etc.).
- Define the communication cable types and routes (e.g., twisted and shielded pairs, CAT-5, coaxial cables, multiple pair cables).
- Review the final design with the substation owner and maintenance crews and the telephone company/service provider.

Copyright © 2008 IEEE. All rights reserved.

Annex E

(normative)

Cable raceway design

This annex provides guidance for both a means of supporting cable runs between electrical equipment and physical protection to the cables. Raceway systems consist primarily of cable tray and conduit.

E.1 Raceway fill and determining raceway sizes

Raceways should be adequately sized as determined by the maximum recommended percentage fill of the raceway area. Conduit fill is based on the following Equation (E.1):

$$\%\,\text{Fill} = \frac{\Sigma\ \text{Cable area}}{\text{Raceway area}} \times 100\ \% \tag{E.1}$$

Guidance for the maximum conduit fill is given in the NEC [B100]. If the fill limitations and cable area are known, the raceway area can be calculated and an adequate size can be selected.

E.2 Conduit

E.2.1 Conduit application

a) RMC or IMC zinc-coated conduit may be exposed in wet and dry locations, embedded in concrete, and direct buried in soil. If they are installed direct buried in soil, consideration should be given to the zinc coating having a limited life, and corrosion may be rapid after the zinc coating is consumed or damaged.

b) When used in cinder fills, the conduit should be protected by noncinder concrete at least 5 cm (2 in) thick. When used where excessive alkaline conditions exist, the conduit should be protected by a coat of bituminous paint or similar material. PVC-coated steel conduit may be used in corrosive environments. Plugs should be used to seal spare conduits in wet locations.

c) EPC-40 or EPC-80 conduit may be used exposed. EPT and Type EB duct must be encased in concrete, and Type DB duct may be direct buried without concrete encasement.

d) Since ABS and PVC conduit may have different properties, a review should be made of their brittleness and impact strength characteristics. Coefficient of expansion should also be considered for outdoor applications. Flammability of such conduits is of particular concern in indoor exposed locations. Burning or excessive heating of PVC in the presence of moisture may result in the formation of hydrochloric acid which can attack reinforcing steel, deposit chlorides on stainless steel surfaces, or attack electrical contact surfaces. The use of exposed PVC conduit indoors should generally be avoided, but may be considered for limited use in corrosive environments.

e) EMT may be used in dry accessible locations to perform the same functions as RMC conduit except in areas that are judged to be hazardous. Guidance in the determination of hazardous areas is given in the NEC [B100].

Copyright © 2008 IEEE. All rights reserved.

f) Aluminum conduit (alloy 6061), plastic-coated steel conduit, Type DB, PVC or ABS duct, EPC-40, or EPC-80, PVC conduit, and FRE conduit may be used in areas where a highly corrosive environment may exist and for other applications where uncoated steel conduit would not be suitable. Aluminum conduit may be exposed in wet and dry locations. Aluminum conduit should not be embedded in concrete or direct buried in soil unless coated (bitumastic compound, etc.) to prevent corrosion. Aluminum conduit may be used, exposed or concealed, where a strong magnetic field exists; however, conduit supports should not form a magnetic circuit around the conduit if all the cables of the electrical circuit are not in the same conduit.

g) The cable system should be compatible with drainage systems for surface water, oil, or other fluids, but preferably should be installed to avoid accumulated fluids.

h) The cable system should be capable of operating in conditions of water immersion, ambient temperature excursions, and limited concentrations of chemicals. Protection should be provided against attack by insects, rodents, or other indigenous animals.

i) Cable trays, conduits, and troughs are sometimes run above grade in substations, supported from equipment, structures, or specially designed ground-mounted structures. Troughs constructed of concrete or other material may be laid on the grade. Cost savings may be realized when comparing above-grade trays, conduit, and troughs to similar below-grade systems.

j) Care should be taken in routing above-grade systems to minimize interference with traffic and equipment access, and to avoid a reduction in minimum electrical clearances.

k) Above-grade systems are more vulnerable to fires, mechanical damage, environmental elements, and seismic forces, and offer greater susceptibility to electrostatic and electromagnetic coupling than if the cables were below grade.

l) Above-ground pull boxes are sometimes used for distribution panels and for common connections such as current or voltage leads. The judicious location of these boxes may result in considerable savings.

E.2.2 Conduit system design

E.2.2.1 Exposed conduit

a) Flexible conduit should be used between rigid conduit and equipment connection boxes where vibration or settling is anticipated or where the use of rigid conduit is not practical. Liquid-tight flexible conduit is commonly used for this application. Flexible conduit length should be as short as practical, but consistent with its own minimum bending radius, the minimum bending radius of the cable to be installed, and the relative motion expected between connection points. A separate ground wire should be installed if the flexible conduit is not part of the grounding and bonding system. See the NEC [B100] for additional guidance.

b) Where it is possible for water or other liquids to enter conduits, sloping of conduit runs, and drainage of low points should be provided.

c) Electrical equipment enclosures should have conduit installed in a manner to prevent the entrance of water and condensation. Drain fittings and air vents in the equipment enclosure should also be considered. Expansion couplings should be installed in the conduit run or at the enclosure to prevent damage caused by frost heaving or expansion.

d) The entire metallic conduit system, whether rigid or flexible, should be electrically continuous and grounded.

e) When installed in conduit of magnetic material, all phases of three-phase ac circuits and both legs of single-phase ac circuits should be installed in the same conduit or sleeve.

f) All conduit systems should have suitable pull points (pull boxes, manholes, etc.) to avoid over-tensioning the cable during installation.

Copyright © 2008 IEEE. All rights reserved.

E.2.2.2 Embedded conduits and manholes

a) Spacing of embedded conduits should permit fittings to be installed.

b) Conduit in duct runs containing one phase of a three-phase power circuit or one leg of a single-phase power circuit should not be supported by reinforcing steel forming closed magnetic paths around individual conduits. Reinforcing steel in the manhole walls should not form closed loops around individual nonmetallic conduit entering the manhole. Nonmetallic spacers should be used.

c) Concrete curbs or other means of protection should be provided where other than RMC conduits turn upward out of floor slabs.

d) The lower surface of concrete-encased duct banks should be located below the frost line. When this is not practical, lean concrete or porous fill can be used between the frost line and the duct bank.

e) Concrete-encased duct banks should be adequately reinforced under roads and in areas where heavy equipment may be moved over the duct bank.

f) Direct buried nonmetallic conduits should not be installed under roadways or in areas where heavy equipment may be moved over them unless the conduits are made from resilient compounds suitable for this service or are protected structurally.

g) Conduits in duct banks should be sloped downward toward manholes or drain points.

h) Duct lengths should not exceed those which will develop pulling tensions or sidewall pressures in excess of those allowed by the cable manufacturer's recommendations.

i) Manholes should be oriented to minimize bends in duct banks.

j) Manholes should have a sump, if necessary, to facilitate the use of a pump.

k) Manholes should be provided with the means for attachment of cable-pulling devices to facilitate pulling cables out of conduits in a straight line.

l) Provisions should be made to facilitate racking of cables along the walls of the manhole.

m) Exposed metal in manholes, such as conduits, racks, and ladders, should be grounded.

n) End bells should be provided where conduits enter manholes or building walls.

o) Manholes and manhole openings should be sized so that the cable manufacturer's minimum allowable cable bending radii are not violated.

p) When installed in conduit of magnetic material, all phases of three-phase ac circuits and both legs of single-phase ac circuits should be installed in the same conduit or sleeve.

E.2.3 Conduit installation

a) Supports of exposed conduits should follow industry standards. See the NEC [B100] for additional information.

b) When embedded in concrete, installed indoors in wet areas, and placed in all outdoor locations, threaded conduit joints and connections should be made watertight and rustproof by means of the application of a conductive thread compound which will not insulate the joint. Each threaded joint should be cleaned to remove all of the cutting oil before the compound is applied. The compound should be applied only to the male conduit threads to prevent obstruction.

c) Running threads should not be utilized, and welding of conduits should not be done.

d) Field bends should not be of lesser radius than suggested by the NEC [B100], and should show no appreciable flattening of the conduit.

Copyright © 2008 IEEE. All rights reserved.

e) Large radius bends should be used to reduce the cable sidewall pressure during cable installation and in conduit runs when the bending radius of the cable to be contained in the conduit exceeds the radius of standard bends.

f) Conduits installed in concrete should have their ends plugged or capped before the concrete is poured.

g) All conduit interiors should be free of burrs and should be cleaned after installation.

h) Exposed conduit should be marked in a distinct permanent manner at each end and at points of entry to, and exit from, enclosed areas.

i) Flexible conduit connections should be used for all motor terminal boxes and other equipment which is subject to vibration. The connections should be of minimum lengths and should employ at least the minimum bending radii established by the cable manufacturer.

j) Conduit should not be installed in proximity to hot pipes or other heat sources.

k) Proper fittings should be used at conduit ends to prevent cable damage.

l) Conduits should be installed so as to prevent damage to the cable system from the movement of vehicles and equipment.

m) Conduit entrances to control buildings should be provided with barriers against rodents and fire.

E.3 Cable tray

E.3.1 Tray design

a) Cable tray design should be based upon the required loading and the maximum spacing between supports. Loading calculations should include the static weight of cables and a concentrated load of 890 N (200 lb) at midspan. The tray load factor (safety factor) should be at least 1.5 based on collapse of the tray when supported as a simple beam. Refer to NEMA VE 1-2002 [B93] for metallic tray or NEMA FG 1-1993 [B89] for fiberglass tray.

b) When the ladder-type tray is specified, rung spacing should be a nominal 23 cm (9 in). For horizontal elbows, rung spacing should be maintained at the center line.

c) Design should minimize the possibility of the accumulation of fluids and debris on covers or in trays.

E.3.2 Tray system design

a) In general, vertical spacing for cable trays should be 30 cm (12 in), measured from the bottom of the upper tray to the top of the lower tray. A minimum clearance of 23 cm (9 in) should be maintained between the top of a tray and beams, piping, etc., to facilitate installation of cables in the tray.

b) Cables installed in stacked cable trays should be arranged by descending voltage levels, with the higher voltage at the top.

c) When stacking trays, the structural integrity of components and the pullout values of support anchors and attachments should be verified.

d) Provisions for horizontal and vertical separation of redundant system circuits are described in Annex I.

Copyright © 2008 IEEE. All rights reserved.

E.3.3 Tray application

The materials from which the tray is fabricated include aluminum, galvanized steel, and fiberglass. In selecting material for trays, the following should be considered:

a) A galvanized tray installed outdoors will corrode in locations such as near the ocean or immediately adjacent to a cooling tower where the tray is continuously wetted by chemically treated water. If an aluminum tray is used for such applications, a corrosive-resistant type should be specified. Special coatings for a steel tray may also serve as satisfactory protection against corrosion. The use of a nonmetallic tray should also be considered for such applications.

b) For cable trays and tray supports located outdoors, the effect of the elements on both the structure and the trays should be considered. Ice, snow, and wind loadings should be added to loads described in item a) of E.3.1. Aluminum alloys 6061-T6, 6063-T6, and 5052-M34 are acceptable, with careful recognition of the differences in strength. Mill-galvanized steel should normally be used only for indoor applications in noncorrosive environments. Hot-dipped galvanized-after-fabrication steel should be used for outdoor and damp locations.

c) When the galvanized surface on the steel tray is broken, the area should be coated to protect against corrosion.

d) Consideration should be given to the relative structural integrity of aluminum versus steel tray during a fire.

E.3.4 Tray load capacity

a) The quantity of cable installed in any tray may be limited by the structural capacity of the tray and its supports. Tray load capacity is defined as the allowable weight of wires and cables carried by the tray. This value is independent of the dead load of the tray system. In addition to and concurrent with the tray load capacity and the dead load of the tray system, any tray should neither fail nor be permanently distorted by a concentrated load of 890 N (200 lb) at midspan at the center line of the tray or on either side rail.

b) A percentage fill limit is needed for randomly filled trays because cables are not laid in neat rows and secured in place. This results in cable crossing and void areas, which take up much of the tray cross-sectional area. Generally, a 30% to 40% fill for power and control cables and a 40% to 50% fill for instrumentation cables is suggested. This will result in a tray loading in which no cables will be installed above the top of the side rails of the cable tray, except as necessary at intersections and where cables enter or exit the cable tray systems.

c) The quantity of cables in any tray may be limited by the capacity of the cables at the bottom of the tray in order to withstand the bearing load imposed by cables located adjacent and above. This restraint is generally applicable to instrumentation cables, but may also apply to power and control cables.

E.4 Cable tray installation

E.4.1 Dropouts

a) Drop-out fittings should be provided when it is required to maintain the minimum cable training radius.

b) Where conduit is attached to the tray to carry exiting cable, the conduit should be rigidly clamped to the side rail. When conduit is rigidly clamped, consideration should be given to the forces at the connection during dynamic (seismic) loading of the tray and conduit system. Conduit connections through the tray bottom or side rail should be avoided.

Copyright © 2008 IEEE. All rights reserved.

E.4.2 Covers

a) Horizontal trays exposed to falling objects or to the accumulation of debris should have covers.

b) Covers should be provided on exposed vertical tray risers at floor levels and other locations where possible physical damage to the cables could occur.

c) Where covers are used on trays containing power cables, consideration should be given to ventilation requirements and cable ampacity derating.

E.4.3 Grounding

Cable tray systems should be electrically continuous and solidly grounded. When cable trays are used as raceways for solidly grounded or low-impedance grounded power systems, consideration should be given to the tray system ampacity as a conductor. Inadequate ampacity or discontinuities in the tray system may require that a ground conductor be attached to and run parallel with the tray, or that a ground strap be added across the discontinuities or expansion fittings. The ground conductor may be bare, coated, or insulated, depending upon metallic compatibility.

E.4.4 Identification

Cable tray sections should be permanently identified with the tray section number as required by the drawings or construction specifications.

E.4.5 Supports

The type and spacing of cable tray supports will depend on the loads. Tray sections should be supported near section ends and at fittings such as tees, crosses, and elbows. Refer to NEMA VE 1-2002 [B93].

E.4.6 Location

Trays should not be installed in proximity to heating pipes and other heat sources.

E.5 Wireways

Wireways are generally sheet metal troughs with hinged or removable covers for housing and protecting wires and cables. Wireways are for exposed installations only and should not be used in hazardous areas. Guidance in the determination of hazardous areas is given in the NEC [B100]. Consideration should be given to the wireway material where corrosive vapors exist. In outdoor locations, wireways should be of raintight construction. The sum of the cross-sectional areas of all conductors should not exceed 40% of the interior cross-sectional area of the wireway. Taps from wireways should be made with rigid, intermediate metal, electrical metallic tubing, flexible-metal conduit, or armored cable.

E.6 Direct burial, tunnels, and trenches

This clause provides guidance for the installation of cables that are direct buried or installed in permanent tunnels or trenches.

E.6.1 Direct burial

Direct burial of cables is a method whereby cables are laid in an excavation in the earth with cables branching off to various pieces of equipment. The excavation is then backfilled.

Copyright © 2008 IEEE. All rights reserved.

A layer of sand is usually installed below and above the cables to prevent mechanical damage. Care should be exercised in backfilling to avoid large or sharp rocks, cinders, slag, or other harmful materials.

A warning system to prevent accidental damage during excavation is advisable. Several methods used are treated wood planks, a thin layer of colored lean concrete, a layer of sand, strips of plastic, and markers above ground. Untreated wood planks may attract termites, and overtreatment may result in leaching of chemicals harmful to the cables.

Spare cables or ducts may be installed before backfilling.

This system has low initial cost, but does not lend itself to changes or additions, and provides limited protection against the environment. Damage to cables is more difficult to locate and repair in a direct burial system than in a permanent trench system.

E.6.2 Cable tunnels

Walk-through cable tunnels can be used where there will be a large number of cables.

This system has the advantages of minimum interference to traffic and drainage, good physical protection, ease of adding cables, shielding effect of the ground mat, and the capacity for a large number of cables.

Disadvantages include high initial cost and danger that fire could propagate between cable trays and along the length of the tunnel. Fire hazards may be reduced by providing fire stops.

E.6.3 Permanent trenches

Trench systems consist of main runs located to bring large groups of cables through the centers of equipment groups, with short runs of conduit, smaller trenches, or direct-burial cable branching off to individual pieces of equipment. Typical trench configurations are shown in Figure E.1.

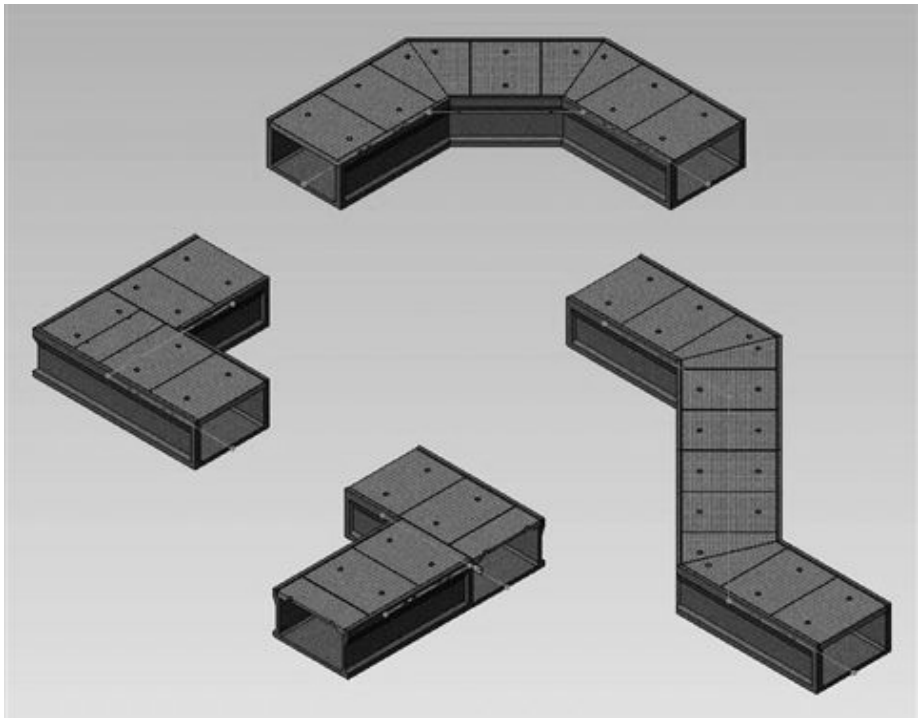

Figure E.1—Typical trench configurations

Copyright © 2008 IEEE. All rights reserved.

Duct entrances may be made at the bottom of open-bottom trenches or through knockouts in the sides of solid trenches.

Trenches may be made of cast-in-place concrete, fiber pipes coated with bitumastic, or precast material.

Where trenches interfere with traffic in the substation, vehicle crossovers—permanent or temporary—may be provided as needed. Warning posts or signs should be used to warn vehicular traffic of the presence of trenches.

The trenches may interfere with surface drainage and can be sloped to storm sewers, sump pits, or French drains. Open-bottom trenches may dissipate drainage water but are vulnerable to rodents. A layer of sand applied around the cables in the trench may protect the cables from damage by rodents. Trenches at cable entrances into control buildings should be sloped away from the building for drainage purposes. The trenches also should have a barrier to prevent fire or rodents from entering the control building.

The tops of the trench walls may be used to support hangers for grounded shield conductors. The covers of trenches may be used for walkways. Consideration should be given to grounding metal walkways and also to providing safety clearance above raised walkways. Added concern should be given to the flammability of wood.

E.6.3.1 Floor trenches

Trenches cast into concrete floors may be extensive, with trenches run wherever required; or a few trenches may be run under the switchboards, with conduits branching to various pieces of equipment.

Removable covers may be made of metal, plywood, or other materials. Nonmetallic cover materials should be fire retardant. Trenches cast into concrete floors should be covered. It should be noted that metal covers in the rear of switchboards present a handling hazard, and nonmetallic, fire-retardant material should be used.

Where cables pass through holes cut in covers, for example, in rear or inside of switchboards, the edges should be covered to prevent cable damage from sharp edges.

E.6.3.2 Raised floors

Raised floors provide maximum flexibility for additions or changes. Entrance from the outside into the raised floor system may be made at any point along the control house wall.

Use of a fire protection system under the floor should be considered.

Copyright © 2008 IEEE. All rights reserved.

Annex F

(normative)

Routing

F.1 Length

Cable routing in the switchyard should provide the shortest possible runs to minimize voltage drops in the auxiliary power and control cables, and loss of signal in a communication cable, etc., as well as to reduce amount of cable required.

F.2 Turns

Layouts should be designed to avoid sharp corners and provide adequate space to meet bending radius and cable pull requirements for specific types of cables.

F.3 Physical location and grouping

Physical separation of redundant cable systems generally utilize separate raceway systems or barriers within raceways, such as cable trays and cable trenches, to isolate wiring of normal power supplies, primary relaying and control, and the primary battery system from the wiring of backup power supplies, backup or secondary relaying and control, and the secondary battery system. When stacking cable trays, the primary and backup systems should not be stacked over each other in order to minimize the possibility of a cable fire damaging both systems.

Physical separation between transient source and control cables is an effective means of transient control. Because mutual capacitance and mutual inductance are greatly influenced by circuit spacing, small increases in distance may produce substantial decreases in interaction between circuits (Dietrich et al. [B11]).

Where possible, control cables should be routed perpendicular to EHV (345 kV or greater) busses ("Induced transient voltage reductions in Bonneville Power Administration 500 kV substation" [B25], "Protection against transients" [B104]). When control cables must be run parallel to EHV busses, maximum practical separation should be maintained between the cables and the busses (Dietrich et al. [B11]), and it is recommended to place a ground conductor in the cable trench above the shielded control cables on the side of the trench closest to the overhead bus, or preferably both sides of the trench.

NOTE—Tests indicate that in some cases, nonshielded control cables may be used without paralleling ground cables when they are parallel and are located at a distance greater than 15 m (50 ft) from or are perpendicular to a typical 345 kV bus (Garton and Stolt [B22]).

Great care should be exercised in routing cables through areas of potentially high ground grid current (either power-frequency or high-frequency currents) ("Induced transient voltage reductions in Bonneville Power Administration 500 kV substation" [B25]). When practical, control cables may be installed below the main ground grid.

All cables from the same equipment should be close together, particularly to the first manhole or equivalent in the switchyard ("Induced transient voltage reductions in Bonneville Power Administration 500 kV substation" [B25]).

Copyright © 2008 IEEE. All rights reserved.

Cables connected to equipment having comparable sensitivities should be grouped together and then the maximum separation should be maintained between groups. High-voltage cables should not be in duct runs or trenches with control cables (Dietrich et al. [B11], "Induced transient voltage reductions in Bonneville Power Administration 500 kV substation" [B25], "Protection against transients" [B104]).

F.4 Fire impact

For cases where possible catastrophic failure of equipment leads to fire, all critical cables may be routed to avoid coincidental fire damage. This affects the proximity routing of trenches and the use of radial raceways rather than a grouped raceway.

Copyright © 2008 IEEE. All rights reserved.

Annex G

(normative)

Transient protection of instrumentation, control, and power cable

This annex provides information on the origin of transients in substations, and guidance for cable shielding and shield grounding for medium-voltage power, instrumentation, control, coaxial, and triaxial cable systems.

G.1 Origin of transients in substations

This clause provides information on the origins of EMI voltages in the substation environment.

G.1.1 Switching arcs

One of the most frequently encountered sources of EMI in a high-voltage (230 kV and higher voltage) yard is when the bus is energized or de-energized by an air-break switch or a circuit switcher. Typically during this type of switching, intense and repeated sparkovers occur across the gap between the moving arms. At each sparkover, oscillatory transient currents, 200 A to 1500 A crest, circulate in buses, in the ground grid, in bushing capacitances, in CVTs, and in other apparatus with significant capacitances to ground. The number of individual transients in an opening or closing operation can vary from 5 000 to 10 000 (Gavazza and Wiggins [B23]).

The transients are coupled to the low-voltage wiring by three basic modes. These are as follows:

a) Radiated magnetic or electric field coupling

b) Conducted coupling through stray capacitances such as those associated with bushings, CTs, and CVTs

c) Conductive voltage gradients across ground grid conductors.

G.1.2 Capacitor bank switching

Switching of grounded capacitance banks introduces transients in overhead buses and in the ground grid. In many instances, design requirements dictate installation of several banks in parallel. This necessitates ‘back-to-back’ switching of two or more banks. The ‘back-to-back’ switching of large capacitor banks by a circuit switcher can produce an intense transient electromagnetic field in the vicinity of the banks. These high-energy transients typically couple to cables through the overhead bus and the ground grid conductors.

In many respects these switching transients are similar to those generated by an air break switch energizing or de-energizing a section of bus. These transients differ from the other transients in regards to the magnitude of the transient current and its associated frequencies. While the current magnitudes range from 5 000 A to 20 000 A, the frequency components contain four widely separated ranges listed as follows (“Shunt capacitor switching EMI voltages, their reduction in Bonneville Power Administration substations” [B26]):

a) Frequencies in the megahertz range due to distributed parameters of the buses and the lines

b) Medium frequency oscillations occurring between the two banks contain the frequency range of 5 kHz to 15 kHz (these frequencies are dominant in back-to-back switching)

Copyright © 2008 IEEE. All rights reserved.

c) Low-frequency oscillations occurring between the capacitor banks and the power-frequency source contain the frequency range of 400 Hz to 600 Hz (these frequencies are dominant in the case of a bank switched against the bus)

d) 50 Hz or 60 Hz source frequency

The modes by which the voltage and current transients are coupled to the cables are basically the same as those listed in G.1.1.

G.1.3 Lightning

Lightning is another source that can cause intense EMI in low-voltage circuits. In general, lightning is a high-energy unidirectional surge with a steep wave front. In the frequency domain, a broad frequency band represents this type of surge. The frequency range covered by this spectrum is from dc to megahertz.

The following are some ways lightning can cause over-voltages on cables:

a) Direct strike to the mast or overhead shield wire in the substation

b) Lightning entering the substation through overhead transmission or distribution lines

c) Induced lightning transients due to strikes in the vicinity of the substation

The surge current flows into earth via ground grid conductors and through the multi-grounded shield and neutral network. There are two primary modes of coupling to the cables. The inductive coupling is due to voltage and current waves traveling in the overhead shield wires, in the buses, and in the ground grid conductors. The conductive coupling consists of voltage gradients along the ground grid conductors due to flow of transient current.

In a substation, a transient grid potential rise (TGPR) with respect to a remote ground may also exist. This transient voltage most likely will couple to telecommunication lines entering the substation from remote locations. If proper isolation is not provided, this voltage may cause damage to the telecommunication equipment in the substation. The magnitude of TGPR is proportional to the peak magnitude and rate of rise of the stroke current and the surge impedance of the grounding system.

G.1.4 Power-frequency faults (50 Hz or 60 Hz)

Electronic devices are vulnerable to damages if a large magnitude of power-frequency fault current flows in the ground grid conductors due to a phase-to-ground fault. Incidences involving erroneous operation of relay circuits are known to occur under these conditions.

There are two basic modes of coupling, which exist when a phase-to-ground fault occurs in a substation. The induced voltage on the cable due to the fault current flowing in ground conductors is one mode of coupling. More dominant coupling, however, is the conductive voltage gradient along the ground grid conductors resulting from the current flow.

Coupling due to GPR with respect to remote ground may exist on telecommunication circuits entering the substation. The GPR magnitude will be proportional to the fault current entering the earth from the ground grid conductors and the ground grid resistance to remote ground (IEEE Std 487-2000 [B56], EPRI EL-5990-SR [B18], Perfecky and Tibensky [B103]). Sometimes, the telecommunication circuit leaving the substation parallels the power line. In this case the total coupling would be a net result of GPR and the induced voltage due to fault current flowing in that power line.

Copyright © 2008 IEEE. All rights reserved.

G.1.5 Sources within cable circuits

During interruption of dc in an inductor such as a relay coil, a large induced voltage may appear across the inductor due to Faraday's Law (V =L di/dt) ("Transient pickup in 500 kV control circuits" [B117]). Normally, the maximum voltage will exist at the instant of interruption. The surge voltage magnitude is proportional to the impedance of the supply circuit and the speed of interruption. Voltages in excess of 10 kV have been observed across a 125 V coil in laboratory tests, but 2.5 kV with 5 µs rise time is a typical value to be expected. Once produced, these powerful, fast rising, high-voltage pulses are conducted throughout the supply circuit and can affect adjacent circuits where capacitive coupling exists. Full battery voltage appears initially across the impedance of the adjacent circuit and then decays exponentially in accordance with the resistance-capacitance time constant of the circuit ("Protection against transients" [B104]).

The extensive use of surge capacitors on solid-state equipment and the longer control cable runs associated with EHV stations have substantially increased the capacitance between control wiring and ground. Inadvertent momentary grounds on control wiring cause a discharge or a redistribution of charge on this capacitance. Although this seldom causes failure, the equipment may malfunction.

Saturation of CTs by high-magnitude fault currents, including the dc offset, can result in the induction of high voltages in the secondary windings. This phenomenon is repeated for each transition from saturation in one direction to saturation in the other. The voltage appearing in the secondary consists of high-magnitude spikes with alternating polarity persisting for an interval of a few milliseconds every half cycle ("Protection against transients" [B104]).

G.2 Protection measures—General considerations

There are two types of voltages that develop at cable terminations when the cable is exposed to high energy transients. At this point, it is important to visualize two loop areas enclosed by cable pair including its terminal equipment. The loop area enclosed between the conductors of a pair is relatively small and typically links a fraction of disturbing field. The voltage so developed across the conductors is called differential mode voltage. In general, the differential mode voltages are too small to cause any equipment damage. However, the loop currents that result from these voltages sometimes are responsible for erroneous operations of protective devices. Using a twisted pair cable may eliminate this problem altogether. Responsible for most damages are the common mode voltages at the terminals. The common mode voltage results due to the loop formed between the pair and ground grid conductors. A strong coupling from disturbing fields usually exists due to the large area enclosed by this loop. The common mode voltage is defined as the voltage between the cable conductors and the ground. The main objective of conductive shields is to minimize or preferably eliminate these voltages and resulting currents.

Common and differential mode voltages at cable terminations cannot be completely eliminated, but can be limited in magnitude. Since transient voltages are coupled to the cables due to their exposure in the substation yard, the responsibility of providing protection to reduce these coupled transients rests with utility engineers. On the other hand, designing the electronic equipment to withstand certain transient levels as specified by the standards (ERPI EL-2982, Project 1359-2 [B17], IEC 61000-4-1:2006 [B41], IEC 61000-4-4:2004 [B42], IEC 61000-4-5:2005 [B43], IEEE Std C37.90.1™-2002 [B73]), and providing appropriate surge suppressors at the terminals is traditionally a manufacturer's responsibility. Discussion on terminal protection is beyond the scope of this guide. The following protection measures are discussed in this clause:

a) Cable routing

b) Shield and shield grounding

c) Substation grounding and parallel ground conductors

Copyright © 2008 IEEE. All rights reserved.

G.2.1 Cable routing

Radial arrangement of instrumentation and control circuits will reduce transient voltages by minimizing the loop sizes between the cable pairs running to the same apparatus. This is effectively accomplished by:

— Installing the cable pairs running to the same apparatus in one trench or conduit

— Avoiding the loop formed due to cables running from one apparatus to another apparatus and returning by different route

— Running the circuits in a tree fashion with a separate branch to each equipment such as breaker, transformer, etc.

The trench or conduit carrying the cables should not run parallel to the overhead HV buses. In cases where this is unavoidable, provide as much separation distance as practically feasible to reduce the capacitive coupling from the buses.

A substation may have underground HV circuit running across the yard. A power-frequency fault current in the HV cable may cause a transient in control cables laid in parallel and in proximity due to magnetic coupling. Avoiding the parallel run or providing a larger separation distance can reduce the transient overvoltage.

G.2.2 Shield and shield grounding

In general, shielded cables, regardless of ground connections at the ends, provide immunity from magnetically coupled voltages. This protection is a result of eddy currents set up by the external magnetic field in the coaxial shield. The eddy currents in the shield then produce the opposing field reducing the field coupled to the signal conductors. Due to its high conductivity and immunity from saturation, a nonmagnetic (nonferrous) material is typically used for shielding purpose. A typical nonmagnetic material used for shielding purpose may include copper, aluminum, bronze, or lead. The shielding efficiency of a nonmagnetic eddy-current shield is directly proportional to the following (Buckingham and Gooding [B8]):

a) Shield diameter

b) Shield thickness

c) Conductivity (or 1/resistivity)

d) Frequency

e) Permeability

The lower the shield impedance, the greater its transient voltage cancellation efficiency. Generally, lower surge impedance permits larger induced transient currents to flow in the shield ("Methods of reducing transient overvoltages in substation control cables" [B84]). Table G.1 lists the conductivity data of four commonly used shielding materials.

Table G.1—Conductivity data for four commonly used shielding materials

	Copper	Aluminum	Bronze [a]	Lead
Conductivity, mho-meter	58	35.4	25.5	4.5

[a] 90% copper; 10% zinc.

Copyright © 2008 IEEE. All rights reserved.

The protection provided by an ungrounded shield is not adequate in high-voltage and high current noise environments of substations. For example, an ungrounded shield cannot protect the cable from capacitively coupled voltages. Typically 1% of the transient voltage on a high-voltage bus is coupled to a cable with ungrounded shield. This can amount to a common mode voltage of several thousand volts. With the shield grounded at one end, the capacitively-coupled electric field is prevented from terminating on the cable resulting in virtually no differential or common mode voltage.

Grounding the shield at one end effectively protects the equipment at that end but equipment connected at the ungrounded end remains unprotected. In some instances, shield-to-ground and conductor-to-ground voltages may even increase at the ungrounded end (Dietrich et al. [B11], "Methods of reducing transient overvoltages in substation control cables" [B84]). For providing protection at both ends of the cable, the shield should be grounded at both ends (Garton and Stolt [B22]). Grounding the shield at both ends links a minimum external field due to reduced loop area enclosed by the cable pairs and shield conductor. Several field and laboratory tests show that grounding the shield at both ends reduce the common mode voltage between 50 and 200 times ("Control circuit transients in electric power systems" [B78], "Control circuit transients" [B79]).

The shield conductors are not rated to carry power-frequency fault currents. For this reason, one or more ground conductors should be installed in the proximity of the cable circuits where shield conductors are grounded at both ends.

In the case of an unbalanced circuit (equipment circuit is not grounded in the electrical middle), a differential voltage across the pair develops if the impedance on each side of the signal ground in the terminal equipment is different. This differential voltage will be proportional to the current due to the common mode voltage during the transient. Depending on the unbalance at the terminal, grounding the shield at both ends may increase this differential voltage. For a given transient, this differential voltage can be reduced by grounding the signal circuit nearly in the electrical middle (IEEE Std 1050-1996 [B65]).

It is necessary to keep the shield in a cable intact, as a broken or separated shield can greatly reduce the shield efficiency. Also, in a substation where there may at times be large fault currents, a problem arises if the shield is grounded at two widely separated locations. The power-frequency potential difference on the ground grid may cause enough current to flow in the shield to cause damage. Installation of one or more 2/0 or 4/0 AWG bare copper conductors in parallel would significantly reduce the current flow in the shield.

G.2.3 Substation grounding and parallel ground conductors

The design of ground grid systems, the methods of grounding equipment, and shielding of cable circuits have a large influence on EMI voltages that appear at the terminals.

The ground grid, even when designed with a very low resistance, cannot be considered as an equal-voltage surface. Substantial grid voltage differences may exist particularly in a large substation yard. Several factors influence voltage gradients across the ground grid conductors. These factors include the impedance of grid conductors, grid geometry, distribution of ground currents (see IEEE Std 80™-2000 [B48]), earth resistivity (see "Transient pickup in 500 kV control circuits" [B117] and IEEE Std 81™-1983 [B49]), and magnitude and frequency of the transient (Gillies and Ramberg [B24]).

Since it is impractical to eliminate voltage gradients along ground grid conductors, additional measures are necessary to reduce their influence on the cables. Typically this measure consists of installing low-impedance ground conductors in proximity and parallel to the affected circuits. These conductors carry currents proportional to voltage gradients along the grid conductors and serve several purposes. The flow of currents in these conductors induces a counter voltage in the control circuits and also reduces the conductive voltage difference between the two terminals. In the case of a power-frequency fault, these ground conductors carry most of the fault currents protecting the shield conductors grounded at both ends.

Copyright © 2008 IEEE. All rights reserved.

The following are some guidelines to maximize protection from parallel ground conductors:

a) *Ground conductors in trenches*

1) Install conductors with sufficient conductivity to carry maximum available fault current in the substation and having adequate mechanical strength. A typical installation uses 2/0 or 4/0 bare copper conductor.

2) Attach a minimum of two ground conductors on the topside of each trench. If required, additional ground conductors can be placed outside but in proximity of the trench. This places the ground conductors between the radiated EMI source and the cables ("Transient pickup in 500 kV control circuits" [B117]).

3) Connect ground conductors with ground grid mesh conductors at several locations.

b) *Ground conductors parallel to duct banks*

1) Place a minimum of two ground conductors at the top edges of the duct bank. Ground conductors can also be placed in conduits provided that they intercept radiated fields.

2) Establish a ground bus around the perimeter of the manhole with at least two ties to the substation grid. This ground bus provides a convenient means of grounding individual cable shields if required.

c) *Parallel ground conductors for directly buried cables*

— Place one or more ground conductors in proximity of each cable run if cable paths are diverse.

d) *Protection for unshielded cables*

1) Ground conductors provide protection to both, shielded and unshielded cables. However, unshielded cables receive more benefit from the parallel ground conductors. To be most effective, the ground conductors should be as close to the cables as possible.

2) In an unshielded cable, grounding of unused pair(s) at both ends provides the most effective protection ("Transient pickup in 500 kV control circuits" [B117]). Provisions should be made for replacement with shield conductors should the unused conductors later be used for active circuits. A parallel ground conductor should accompany the cable if a spare pair is grounded at both ends.

G.3 Protection measures—special circuits

This clause provides shielding and grounding guidelines for special circuits such as circuits to CVTs, CTs, capacitor banks, and coupling capacitor line tuning equipment. The clause also provides shielding guidelines for high-voltage power cables, coaxial and triaxial cables, and the cables carrying low magnitude signals.

G.3.1 Instrument transformers (CVTs and CTs)

Equipment such as CVTs can couple high common-mode voltages to low-voltage secondary cables originating from the base cabinet. The source of transients in many of such cases is the capacitive current interruption by an air break switch. The surge impedances of the ground leads connecting the CVT bases to local ground grid are primarily responsible for developing these high transient voltages. The transient voltages are coupled to the low-voltage circuit via device's stray capacitance.

Measuring CTs are normally located in breaker bushings. The bushing capacitances generate the voltage transients on breaker casings in the same manner as the CVT devices. These transients then can be coupled to CT secondary circuits or any low-voltage circuit or equipment residing in the breaker cabinet.

Copyright © 2008 IEEE. All rights reserved.

The coupled voltages are typically reduced by lowering surge impedances of the ground leads and the surrounding ground grid. This can be accomplished by mounting the CVT or breaker cabinets as close to the ground as permitted by clearance standards and by providing multiple low-resistance conductors between the cabinets (for three standalone cabinets) and between the cabinets and the station ground grid. The secondary circuits exiting the cabinets should run in the vicinity of the ground leads. Additionally, the secondary cables should be laid out radially and as close to the ground grid conductors as possible. If ground grid conductors in the proximity are not available, dedicated ground conductors should be installed. Using shielded cables for secondary circuits can provide additional immunity. In such a case, the shield should be grounded at both ends. Instrument transformer secondaries should be connected to ground at only one point (see IEEE Std C57.13.3™-1983 [B76]). Making the ground connection at the relay or control building has the following advantages:

a) Voltage rise is minimized near the relay equipment.

b) The shock hazard to personnel in the building is reduced.

c) All grounds are at one location, facilitating checking.

CT secondary leads in a primary voltage area exceeding 600 V should be protected as required by Rule 150 of the NESC.

G.3.2 Shunt capacitor banks

In the case of a grounded shunt capacitor installation operated at 115 kV and higher voltage, the EMI can be controlled by the use of shielded cables, and grounding the shields at both ends. However, in the case of multiple banks requiring back-to-back switching, special protection measures may be necessary ("Shunt capacitor switching EMI voltages, their reduction in Bonneville Power Administration substations" [B26]). A pre-insertion resistor or current limiting reactor inserted between the banks can substantially reduce the switching transient in back-to-back switching. Closing the circuit switcher at a "zero voltage" point on the voltage wave can also reduce the transient significantly. Special shielding and grounding practices as listed below may, however, be required in absence of such mitigation methods:

a) Route instrumentation and control circuits directly under the supply buses and close to 'peninsula' ground grid conductors until they are a minimum of 6 m (20 ft) within the influence of the main substation ground grid.

b) Ground the end of the cable shield in the capacitor yard to a 'peninsula' grounding system.

c) Ground the cable shield to the ground grid at the nearest manhole, hand hole, trench, or tunnel adjacent to the capacitors.

d) Ground the shield at the entrance to the control or relay house.

e) If the shield is extended beyond the entrance into the control or relay house, ground the shield at the switchboard or other cable termination.

f) Capacitor yard lighting and receptacle circuits should also be shielded, if the light posts are grounded to 'peninsula' grounding. If the light posts are not grounded to 'peninsula' grounding, they should be located a minimum of 2 m (6 ft) away from any structure that is grounded to the peninsula grounding. This will reduce the probability of personnel simultaneously contacting both structures and being in series with the potential difference between the peninsula and the rest of the grid during capacitor switching, or during a fault.

g) In the manhole adjacent to the capacitor yard where capacitor cable shields are grounded, ground all other cable shields, even if they are not related to the capacitors. Also, ground all cable shields grounded in this manhole at their remote ends. During capacitor switching and faults, the potential of the peninsula ground grid and the area around the first manhole may be quite high. A high voltage could exist between cables if some shields are not grounded, and between the ends of the shields if both ends are not grounded.

Copyright © 2008 IEEE. All rights reserved.

h) High-voltage shunt capacitor banks of a given voltage should have the neutrals from individual banks connected together and then connected to the station ground grid at only one point. To facilitate single point grounding, all capacitor banks of a given voltage should be at one location.

G.3.3 High susceptibility circuits

This subclause provides guidance for shielding and grounding of control and instrumentation circuits with high susceptibility to steady-state noise. High susceptibility circuits are those carrying low level voltage and current signals. A thermocouple circuit carrying analog signals in millivolt range is one good example of this type of circuit.

The protection measures described in this section may not be necessary if interference due to steady-state noise is not a concern even for high susceptibility circuits. Users should follow the general shielding and grounding practices described in G.2 in such cases.

For further details on shielding and grounding of high susceptibility circuits, see IEEE Std 1050™-1996 [B65]. For information on application of instrumentation and control cables for SCADA, see IEEE Std C37.1™-1994 [B72].

G.3.3.1 Use of twisted pair cable

The use of twisted pair cables is an effective method for reducing steady-state differential mode noise on high susceptibility cables. Using cables with twisted pair conductors and individually insulated shields over each pair is also effective in minimizing crosstalk in communication circuits.

G.3.3.2 Grounding of signal circuit

The signal circuit may originate at a source such as a transducer and terminate at a receiver (load) such as a recorder or a SCADA RTU either directly or through an amplifier.

If the receiver is receiving the signal from a grounded voltage source, a thermocouple, for example, the receiver input should be capable of high common-mode rejection. This can be accomplished by either isolating the receiver from the ground or installing a differential amplifier with isolated guard at the receiver input terminals. Isolating the circuits from ground effectively opens the ground common-mode voltage path in the signal circuit. If a single-ended amplifier already exists at the input terminal of the receiver, the low side of the signal circuit is not broken and should be considered grounded at the terminal. In this case, the same isolation procedure as indicated above should be followed.

When an ungrounded transducer is used, the receiver may not need isolation. In such a case, a single-ended amplifier can be installed at the input terminal if required.

G.3.3.3 Shield grounding

In the case of a high susceptibility circuit, the shield may be connected to ground at only one point, preferably where the signal equipment is grounded. If the shield is grounded at some point other than where the signal equipment is grounded, charging currents may flow in the shield because of the difference in voltages between signal and shield ground locations. Similarly if the shield is grounded at more than one point, voltage gradients along the ground conductors may drive current through the shield. In either case, the common mode noise current in the shield can induce differential mode noise in the signal leads. Depending on the unbalance in the signal circuit, noise voltages of sufficient magnitudes may be developed to reduce the accuracy of the signal sensing equipment.

In a system with a grounded transducer at one end and an isolated differential amplifier at the receiving end, connecting the cable shield to the amplifier guard shield may reduce the amplifier's common-mode

Copyright © 2008 IEEE. All rights reserved.

rejection capability. A preferred practice, in such a case, is to isolate the cable shield from the amplifier guard shield and to ground the shield only at the transducer end. This shield grounding practice minimizes the shield-induced common-mode current while permitting the amplifier to operate at maximum common-mode rejection capability.

To provide immunity from transient overvoltages, the nongrounded end of the shield may be grounded through a suitable capacitor or a surge suppressor varistor.

G.3.4 Shielding terminations at the equipment

The following guidelines may be followed for the circuits entering equipment located in the control house or yard:

a) If cable shields are grounded at the entrance of the control house, they should be extended beyond the building entrance and grounded at their final terminations in the cabinet.

b) To minimize the size of the loop formed between the cable and the shield, carry the shield with the cable as far towards the equipment as practical before grounding.

G.3.5 Cables and shielding for power-line carrier equipment

The circuits for PLC equipment typically consist of three specific types of cables. These types are as follows: insulated single conductor, coaxial cable, and triaxial cable. For additional guidance on PLC and circuits, refer to IEEE Std 643™-1980 [B61]).

G.3.5.1 Insulated single conductor

An insulated single conductor is used to connect a coupling capacitor to line-tuning equipment or outdoor transmitting and receiving equipment. It can also be used as the interconnecting lead for short bypasses.

Bare conductors and coaxial cables should be avoided for these applications, since either one can introduce excessive leakage currents or excessive stray capacitance.

Since a single conductor is at a high impedance point when connected between a coupling capacitor and a line tuner, stray capacitance-to-ground and leakage currents can affect the coupling circuit performance. The stray capacitance can cause a reduction in bandwidth, and the leakage currents can cause a loss in carrier power.

To reduce stray capacitance and leakage currents, either of the following methods may be used:

a) An insulated single conductor should be run as directly as possible between its required terminations. It should be mounted on insulators and fed through bushings at each end. The conductor insulation should be unbroken between its ends to maintain low leakage.

b) An insulated single conductor can be installed in a nonmagnetic flexible metal conduit, which is sheathed in a vinyl jacket. The insulated single conductor should be isolated from the flexible metal conduit with nonconductive washers spaced about 150 mm (6 in) apart. If the conductor has a significant portion of its length outside the flexible metal conduit, it should be mounted on insulators and fed through bushings at its ends as in item a).

A typical insulated carrier lead, 12 mm (0.48 in) in diameter, consists of a single 8 AWG, 19-strand conductor having rubber insulation and a neoprene outer jacket.

Copyright © 2008 IEEE. All rights reserved.

G.3.5.2 Coaxial cables

This type of cable is sometimes used for a low-impedance interconnection between a line tuner and a transmitter/receiver or between line tuners in a long bypass. It is sometimes used between an impedance-matching transformer in a coupling capacitor base and a transmitter/receiver.

In these applications, the copper braid (shield) that forms the outer conductor of the cable should be grounded at the transmitter/receiver end only (or at only one end of a bypass). If both shield ends are grounded, large surge currents can flow under certain conditions, causing saturation of the impedance-matching transformer and resulting in an inoperative carrier channel.

G.3.5.3 Triaxial cables (or shielded coaxial cable)

On transmission lines operating at voltages greater than 230 kV, triaxial cable may be used instead of coaxial cable. This cable provides an additional heavy shield, which does not carry signal currents. The outer shield is capable of carrying large induced surge currents under fault conditions and is grounded at both ends. This arrangement provides an effective shielding against both magnetic and electrostatic induction.

Copyright © 2008 IEEE. All rights reserved.

Annex H

(normative)

Electrical segregation

Physical separation between a transient source and control cables is an effective means of transient control. Because mutual capacitance and mutual inductance are greatly influenced by circuit spacing, small increases in distance may produce substantial decreases in interaction between circuits.

Table H.1 provides the allowable mixing requirements for segregation of various types of circuits in raceways.

Table H.1—Circuit mixing/segregation in raceways

Raceway system	Circuit types allowed to be installed together
Individual ducts, conduits	Control and instrumentation and power only if ≤ 120 V (ac). Single conductor smaller than 6 AWG shall be segregated from multiconductor cable except in runs ≤ 6 m (20 ft). Communication circuits should be in a dedicated duct, or sub-duct, whenever possible.
Duct banks	All types, segregated as necessary into individual ducts
Trench	All types. Barrier required for power circuits greater than 240 V (ac). Communication circuits should be enclosed in a sub-duct within the trench.
Tray or wireways	Control and instrumentation, communication, power only if ≤ 120 V (ac)
Connecting raceways, ≤ 1.8 m (6 ft) (e.g., between junction box and equipment cabinet)	Control and instrumentation, communication, power only if ≤ 120 V (ac)

Copyright © 2008 IEEE. All rights reserved.

Annex I

(normative)

Separation of redundant cable

This annex provides guidance for the separation of redundant cable systems.

I.1 Redundant cable systems

Redundant cable systems are two or more systems serving the same objective. They may be systems where personnel safety is involved, such as fire pumps, or systems provided with redundancy because of the severity of economic consequences of equipment damage or system reliability. Primary and backup relaying and normal and backup station service supplies are practical examples of redundant cable systems.

I.2 Design considerations

Redundant cable systems should be physically and electrically separated to ensure that no single event, whether physical in nature or electrical in nature, would prevent a required specific substation operation. The degree and type of separation required varies with the potential hazards to the cable systems in particular areas of the substation.

I.3 Redundancy

All redundant cables (for example, primary and back-up relay protection control cables) may be routed via different paths to increase reliability.

Copyright © 2008 IEEE. All rights reserved.

Annex J

(normative)

Cable pulling tension calculations

J.1 Cable pulling design limits and calculations

The following design limits and formulas provided in this clause should be utilized when determining the maximum safe pulling lengths and tensions. Raceway fill, maximum sidewall pressure, jam ratio, and minimum bending radius are design limits which should be examined in designing a proper cable pull.

These design limits are prerequisites needed in designing a cable raceway system. Once these limits are determined for a particular cable, the raceway system can then be designed. If the system has already been designed, modifications may be required in order to pull the cable without damage.

Conduit and duct system design should consider the maximum pulling lengths of cable to be installed. The maximum pulling length of a cable or cables is determined by the maximum allowable pulling tension and sidewall pressure. The pulling length will be limited by one of these factors.

Pull points or manholes should be installed wherever calculations show that expected pulling tensions exceed either maximum allowable pulling tension or sidewall pressure. Also, an industry "rule of thumb" is no more than 360° of total bends along the cable pull, though actual calculations will override this "rule of thumb."

A sample calculation for determining cable pulling tensions is shown in J.4 and O.6.

J.2 Design limits

J.2.1 Maximum allowable pulling tension

The maximum allowable pulling tension is the minimum value of T_{max} from the applicable following guidelines, unless otherwise indicated by the cable manufacturer.

The maximum tension on an individual conductor should not exceed

$$T_{cond} = K \cdot A \tag{J.1}$$

where

T_{cond}	is the maximum allowable pulling tension on individual conductor, in newtons (pounds)
A	is the cross-sectional area of each conductor in square millimeters (mm^2) (kcmil)
K	equals 70 N/mm^2 (8 lb/kcmil) for annealed copper and hard aluminum
K	equals 52.5 N/mm^2 (6 lb/kcmil) for 3/4 hard aluminum

When pulling together two or three conductors of equal size, the pulling tension should not exceed twice the maximum tension of an individual conductor, i.e.,

$$T_{max} = 2 \cdot T_{cond} \tag{J.2}$$

Copyright © 2008 IEEE. All rights reserved.

When pulling more than three conductors of equal size together, the pulling tension should not exceed 60% of the maximum tension of an individual conductor, times the number of conductors ("N"), i.e.,

$$T_{\mathbf{max}} = 0.6 \cdot N \cdot T_{\mathbf{cond}} \tag{J.3}$$

When pulling using a pulling eye, the maximum tension for a single-conductor cable should not exceed 22.2 kN (5000 lb), and the maximum tension for two or more conductors should not exceed 26.7 kN (6000 lb). The cable manufacturer should be consulted when tensions exceeding these limits are expected.

When pulling by basket grip over a nonleaded jacketed cable, the pulling tension should not exceed 4.45 kN (1000 lb).

When using a basket-weave type pulling grip applied over a lead-sheathed cable, the force should not exceed 6.67 kN (1500 lb) as determined by the following formula:

$$T_{\mathbf{max}} = K_m \pi t (D - t) \tag{J.4}$$

where

- t is the lead sheath thickness, in millimeters (inches)
- D is the OD of lead sheath, in millimeters (inches)
- K_m is the maximum allowable pulling stress in MPa (10.34 MPa to 1.38 MPa [1500 to 200 psi] depending on the lead alloy)

NOTE—For lead-sheathed cables with neoprene jackets, T_{max} = 4.45 kN (1000 lb).

Pulling instructions for coaxial, triaxial, and other special cables should follow the manufacturer's recommendations.

J.2.2 Maximum allowable sidewall pressure

Sidewall pressure, P, is defined as the tension out of a bend expressed in newtons (pounds) divided by the radius of the bend expressed in millimeters (feet). The sidewall pressure on a cable can be calculated by the following equations:

Single cable in conduit

$$P = \frac{T_o}{r} \tag{J.5}$$

Three cables in cradle configuration where the center cable presses hardest against the conduit

$$P = \frac{(3c - 2)T_o}{3r} \tag{J.6}$$

Three cables in triangular configuration where the pressure is divided between the two bottom cables

$$P = \frac{cT_o}{2r} \tag{J.7}$$

Four cables in diamond configuration where the bottom cable is subjected to the greatest crushing force

Copyright © 2008 IEEE. All rights reserved.

$$P = \frac{(3c - 2)T_o}{3r} \tag{J.8}$$

where

P	is the sidewall pressure, in newtons/millimeter (pounds/foot) of radius
T_o	is the tension out of the bend, in newtons (pounds)
c	is the weight correction factor (refer to J.3.1)
r	is the inside radius of bend, in millimeters (feet)

Equation (J.6), Equation (J.7), and Equation (J.8) calculate the sidewall pressure for the cable with the highest sidewall pressure.

The maximum allowable sidewall pressure is 7300 N/m (500 lb/ft) of radius for multiconductor power cables and single-conductor power cables 6 AWG and larger, subject to verification by the cable manufacturer. The recommended maximum allowable sidewall pressure for control cables and single-conductor power cable 8 AWG and smaller is 4380 N/m (300 lb/ft) of radius subject to verification by the cable manufacturer. For instrumentation cable, the cable manufacturer's recommendations should be obtained.

J.2.3 Jam ratio

Jamming is the wedging of cables in a conduit when three cables lie side by side in the same plane. Jam ratio is defined for three cables of equal diameter as the ratio of the conduit inside diameter (D) to the cable outside diameter (d). The jam ratio is a concern because jamming in the conduit could cause damage to one or more of the cables. The possibility of jamming is greater when the cables change direction. Therefore, the inside diameter of the conduit at the bend is used in determining the jam ratio.

Jamming cannot occur when

$$\frac{D}{d} > 3.0$$

Jamming is not likely when

$$\frac{D}{d} < 2.8$$

Jamming is probable when

$$2.8 \le \frac{D}{d} \le 3.0$$

A 40% conduit fill gives a jam ratio of 2.74, which is in the region where jamming is not likely. The inside diameter of a field-bent conduit is usually increased by 5% to account for the oval cross-section that occurs. Adding 5% for a field bent conduit yields a jam ratio of 2.87, which is in the region where jamming is probable.

J.2.4 Minimum bending radius

The minimum bending radius is the minimum radius to which a cable can be bent while under a pulling tension, providing the maximum sidewall pressure is not exceeded. The values given are usually stated as a multiple of cable diameter and are a function of the cable diameter, and whether the cable is nonshielded,

Copyright © 2008 IEEE. All rights reserved.

shielded, armored, or single or multiple conductor. Guidance for minimum bending radii can be obtained from the NEC [B100] or the cable manufacturer.

J.3 Cable-pulling calculations

The equations used to calculate the expected cable-pulling tension are based on the number of cables to be pulled, the type of raceway, the cable configuration in the raceway, and the raceway layout.

J.3.1 Straight sections of conduit or duct

For a straight section of conduit or duct, the pulling tension is equal to the length of the straight run multiplied by the weight per unit length of cable, the coefficient of friction, and the weight correction factor.

In SI units

$$T = Lmgfc \tag{J.9a}$$

where

- T is the pulling tension in a straight duct, in newtons
- L is the length of the straight duct, in meters
- m is the mass of the cable per unit length, in kilograms/meter
- g is the acceleration of gravity, in 9.81 m/s^2
- f is the coefficient of friction
- c is the weight correction factor

In English units

$$T = Lwfc \tag{J.9b}$$

where

- T is the total pulling tension of straight run, in pounds
- L is the length of the straight run, in feet
- w is the weight of the cable(s), in pounds/foot

The coefficient of friction is usually assumed to be as given in Table J.1.

Table J.1—Coefficient of friction, f

Dry cable or ducts	0.5
Well-lubricated cable and ducts	0.15 to 0.35

The weight correction factor takes into account the added frictional forces that exist between triangular or cradle arranged cables resulting in a greater pulling tension than when pulling a single cable. The weight correction factor can be calculated by the following equations:

Three single cables in cradled configuration

$$c = 1 + \frac{4}{3}\left(\frac{d}{D-d}\right)^2 \tag{J.10}$$

Copyright © 2008 IEEE. All rights reserved.

Three single cables in triangular configuration

$$c = \frac{1}{\sqrt{1 - \left(\frac{d}{D-d}\right)^2}} \tag{J.11}$$

Four single cables in diamond configuration

$$c = 1 + 2\left(\frac{d}{D-d}\right)^2 \tag{J.12}$$

where

D is the conduit inside diameter

d is the single conductor cable outside diameter

The weight correction factor for three single-conductor cables can be determined from Figure J.1.

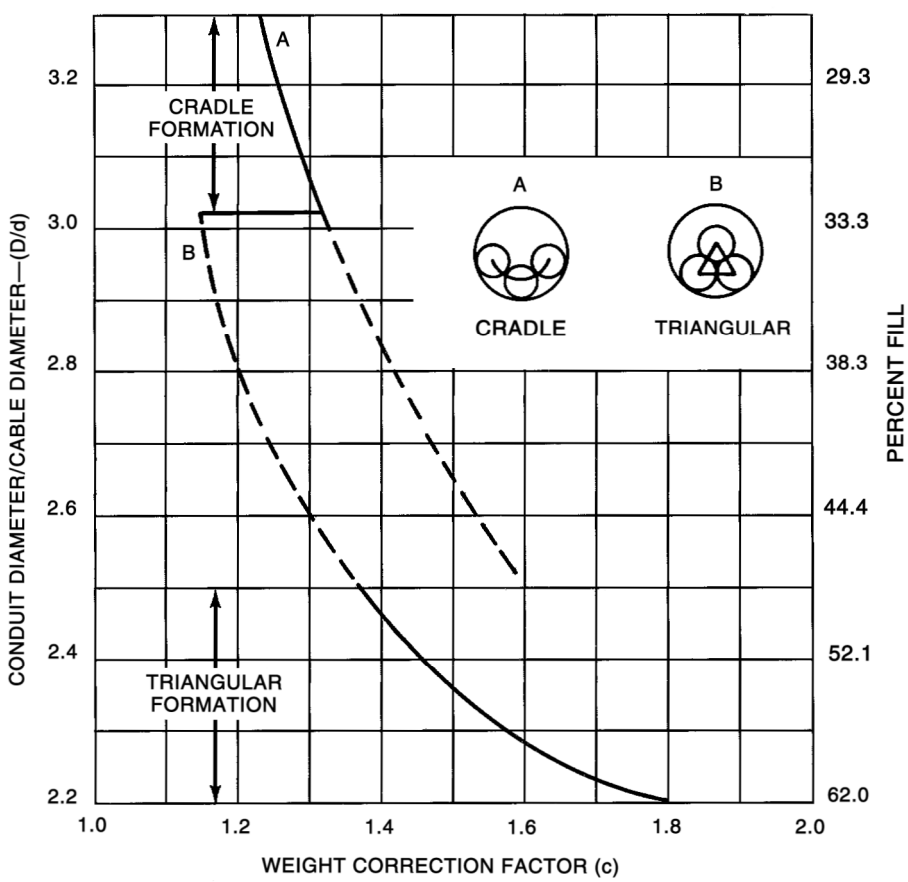

NOTE 1—Curve "A" is for cradle formation.
NOTE 2—Curve "B" is for triangular formation.
NOTE 3—Curve "B" usually joins curve "A" at point shown.
NOTE 4—Dotted portion shows where both formations can exist.

Figure J.1—Weight correction factor (c)

Copyright © 2008 IEEE. All rights reserved.

J.3.2 Inclined sections of raceway

The expected pulling tension of a cable in an inclined section of duct may be calculated from the following Equation (J.13) and Equation (J.14):

$$T_{up} = wL(cf \cos\alpha + \sin\alpha) \tag{J.13}$$

$$T_{down} = wL(cf \cos\alpha - \sin\alpha) \tag{J.14}$$

where

α is the angle of the incline from horizontal

J.3.3 Horizontal and vertical bends

The tension out of a horizontal or vertical conduit bend is normally calculated from the following approximate equation:

$$T_{out} = T_{in} e^{cf\theta} \tag{J.15}$$

where

T_{out} is the tension out of bend, in kilonewtons (pounds)
T_{in} is the tension into the bend, in kilonewtons (pounds)
θ is the angle of the change in direction produced by bend, in radians

This is a simplified equation which ignores the weight of the cable. It is very accurate where the incoming tension at a bend is equal to or greater than 10 times the product of cable weight per meter (foot) times the bend radius (*r*) expressed in meters (feet). If the tension into a bend is less than 10*wr*, the exact equations can be found in "Pipe-line design for pipe-type feeders" [B107]. Cases in which the exact equations may become necessary are where light tensions enter large radii bends. Usually Equation (J.15) is precise enough for normal installations.

J.4 Sample calculation

This subclause is intended to illustrate the calculations required to determine cable pulling tensions in a typical run from a manhole to a riser pole. The typical duct run used for the calculations is shown in Figure J.2.

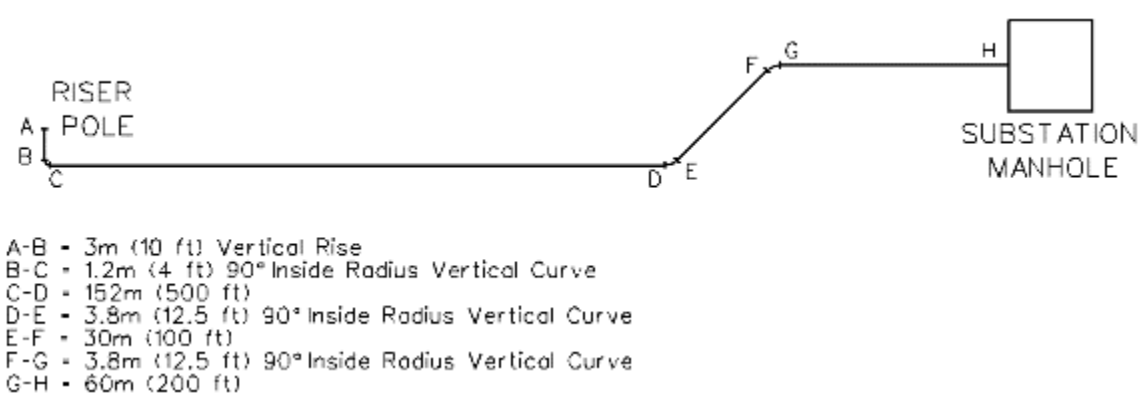

Figure J.2—Duct layout for example calculations

Copyright © 2008 IEEE. All rights reserved.

The cable to be used in this example installation is 3-1/c 750 kcmil triplexed aluminum cable with 1/3 concentric neutral. The completed weight of this cable is 78.4 N/m (5.375 lb/ft) and the OD for each cable is 4.09 cm (1.61 in). Plastic conduit suitable for direct burial (Type DB) is to be used for this example installation.

J.4.1 Conduit fill and jam ratio

In determining the size of conduit required, consideration should be given to conduit fill and jam ratio. Using Equation (E.1) of this guide, the percent fill is given in Equation (J.16):

$$\% \text{ Fill} = \frac{\Sigma \text{ Cable Area}}{\text{Raceway area}} \times 100 \ \% \tag{J.16}$$

Using 10 cm (4 in) conduit, with an internal diameter of 10.23 cm (4.026 in)

$$\% \text{ Fill} = \frac{3\pi\left(\frac{4.0}{2}\right)^2}{\pi\left(\frac{10.2}{2}\right)^2} \times 10 = 47.98 \ \%$$

Since 47.98% exceeds the maximum allowable fill of 40%, the percent fill should be calculated for the next larger size conduit, 13 cm (5 in), with an internal diameter of 12.82 cm (5.047 in)

$$\% \text{ Fill} = \frac{3\pi\left(\frac{4.0}{2}\right)^2}{\pi\left(\frac{12.8}{2}\right)^2} \times 10 = 30.5\%$$

This is an acceptable fill.

The jam ratio, as discussed in J.2.3, should be calculated next. Assuming field bending of the conduit

$$\text{Jam Ratio} = \frac{1.05\,D}{d} \tag{J.17}$$

where

D is the conduit inside diameter
d is the single conductor cable outside diameter

$$\text{Jam Ratio} = \frac{1.05(12.82)}{4.09} = 3.29$$

Jamming cannot occur based on J.2.3 of this guide. Also, where triplexed cable is used, jamming is not a problem since jamming is the wedging of cables in a conduit when three cables lie side by side in the same plane.

J.4.2 Maximum allowable pulling tension

The maximum allowable pulling tension for this example cable is calculated by using Equation (J.1) and Equation (J.2).

Copyright © 2008 IEEE. All rights reserved.

$T_{cond} = K \cdot A$

$T_{cond} = (52.5)\ (381) = 20$ kN (4500 lb)

$T_{max} = 2 \cdot T_{cond} = 2 \times 20 = 40$ kN (9000 lb)

However, as indicated in J.2.1, the maximum tension for two or more conductors should not exceed 26.7 kN (6000 lb), when pulling using a pulling eye.

J.4.3 Minimum bending radius

The minimum bending radius in accordance with the cable manufacturer's recommendation for the example cable is 12 times the overall diameter of the cable. The cabling factor for three conductors triplexed is 2.155.

Minimum bending radius = (12)(2.155)(4.09) = 105.6 cm (41.6 in)

J.4.4 Pulling tensions

The pulling tensions for the example are calculated using Equation (J.9a) or Equation (J.9b) for straight runs and Equation (J.15) for vertical or horizontal bends.

Pulling from A towards H

Since pulling down the vertical section A-B and around the curve B-C would require a negligible tension, the calculations are started at C.

The weight correction factor (c) for three single cables in a triangular configuration is calculated using Equation (J.11).

$$\boldsymbol{c} = \frac{\mathbf{1}}{\sqrt{\mathbf{1} - \left(\frac{\mathbf{4.09}}{\mathbf{12.82 - 4.09}}\right)^{\mathbf{2}}}}$$

$\boldsymbol{c} = 1.13$

Therefore, assuming a dry cable or duct with a coefficient of friction of 0.5

$T_D = (152)(8)\ (9.81)(0.5)(1.13) =$ **6.73 kN** (1518 lb)

$T_E = T_D e^{cf\theta}$

where

θ is the angle of the change in direction produced by bend in radians

NOTE—Conversion factor from degrees to radians is 0.01745.

$T_E = 6.73\ e^{(1.13)(0.5)(45)(0.01745)}$

$T_E = 6.73\ e^{0.4437}$

Copyright © 2008 IEEE. All rights reserved.

$\boldsymbol{T_E}$ **= 10.5 kN** (2366 lb)

$T_F = T_E + (30)(8)(9.81)(0.5)(1.13)$

$T_F = 10.5 + 1.33$

$\boldsymbol{T_F}$ **= 11.8 kN** (2670 lb)

$T_G = T_F e^{cf\theta}$

$T_G = 11.8\ e^{(1.13)(0.5)(45)(0.01745)}$

$T_G = 11.8\ e^{0.4437}$

$\boldsymbol{T_G}$ **= 18.4 kN** (4161 lb)

$T_H = T_G + (60)(8)(9.81)(0.5)(1.13)$

$T_H = 18.4 + 2.66$

$\boldsymbol{T_H}$ **= 21.1 kN** (4768 lb)

This is within the maximum allowable tension of 26.7 kN (6000 lb). However, the maximum sidewall pressure of 7300 N/m (500 lb/ft) should also be checked. The maximum sidewall pressure for this pull will occur at curve F-G and is calculated using Equation (J.7).

$$\boldsymbol{P = \frac{(1.13)(18.4)}{(2)(3.81)}}$$

P = 2.74 kN (188 lb/ft)

This is acceptable.

Pulling from H towards A

$T_G = Lmgfc$

$T_G = (60)(8)(9.81)(0.5)(1.13)$

$\boldsymbol{T_G}$ **= 2.66 kN** (607 lb)

$T_F = T_G e^{cf\theta}$

$T_F = 2.7\ e^{0.4437}$

$\boldsymbol{T_F}$ **= 4.2 kN** (946 lb)

$T_E = T_F + (30)(8)(9.81)(0.5)(1.13)$

$T_E = 4.2 + 1.3$

$\boldsymbol{T_E}$ **= 5.5 kN** (1250 lb)

Copyright © 2008 IEEE. All rights reserved.

$T_D = 5.5\ e^{cf\theta}$

$T_D = 5.5\ e^{(1.13)(0.5)(45)(0.01745)}$

$T_D = 5.5\ e^{0.4437}$

$\boldsymbol{T_D = 8.6}$ **kN** (1948 lb)

$T_C = T_D + (152)(8)(9.81)(0.5)(1.13)$

$T_C = 8.6 + 6.7$

$\boldsymbol{T_C = 15.3}$ **kN** (3466 lb)

$T_B = 15.3\ e^{cf\theta}$

$T_B = 15.3\ e^{(1.13)(0.5)(90)(0.01745)}$

$T_B = 15.3\ e^{0.8873}$

$\boldsymbol{T_B = 37.2}$ **kN** (8417 lb)

This tension exceeds the maximum allowable tension of 26.7 N (6000 lb). Therefore, a cable pull from H to A should not be permitted. The cable should be pulled from A to H. The let-off reel should be at the riser pole and the cable should be pulled toward the manhole, in order not to exceed the maximum allowable pulling tension or sidewall pressure.

Copyright © 2008 IEEE. All rights reserved.

Annex K

(normative)

Handling

This annex provides guidance for the construction methods, materials, and precautions in handling and storing cable.

K.1 Storage

Reels should be stored upright on their flanges and handled in such a manner as to prevent deterioration of, or physical damage to, the reel or to the cable. During storage, the ends of the cables should be sealed against the entrance of moisture or contamination. Reels should be stored on solid ground to prevent the flanges from sinking into the earth.

NOTE—When stored outside for long periods of time (longer than typical installation staging periods), the cable will require protection from sunlight (UV radiation). It is preferable to store the cable inside if UV protection cannot be provided.

K.2 Protection of cable

a) If the cable manufacturer's recommended maximum pulling tension, sidewall pressure, or the minimum bending or training radius is violated, damage could occur to the cable conductor, insulation, shield, or jacket. This could lead to premature failure and/or poor life-cycle operation.

b) Special care should be exercised during welding, soldering, and splicing operations to prevent damage to cables. If necessary, cables should be protected by fire-resistant material.

c) Cables should be sealed before pulling and resealed after pulling, regardless of location.

d) If water has entered the cable, a vacuum should be pulled on the cable or the cable should be purged with nitrogen to extract the water, and tested for dryness.

e) Prior to and after the cable pull is complete, the cable manufacturer's recommendations for minimum bending radii should be followed.

Copyright © 2008 IEEE. All rights reserved.

Annex L

(normative)

Installation

This annex provides guidance for the construction methods, materials, and precautions in installing cable systems. Fiber-optic cable is addressed separately in 6.11.

L.1 Installation

a) The cable manufacturer's recommended temperature limits should be followed when pulling or handling cables during extreme low temperatures. Handling or pulling cables in extremely low temperatures can cause damage to the cable sheathing, jacketing or insulation. To prevent damage of this nature, store cables in a heated building at least 24 h prior to installation.

b) Table L.1 provides the cable manufacturer's recommended low temperature limits for handling and pulling cables with various types of jackets or insulations.

c) Cable-pulling lubricants should be compatible with the cable outer surface and should not set up or harden during cable installation. The lubricant should not set up so as to prevent the cable from being pulled out of the conduit at a later time. Cable lubricants should not support combustion.

d) Pulling winches and other necessary equipment should be of adequate capacity to ensure a steady continuous pull on the cable. Use of truck bumpers is not recommended for longer pulls due to risk of unsteady pull.

e) Cable reels should be supported so that the cable may be unreeled and fed into the raceway without subjecting the cable to a reverse bend as it is pulled from the reel.

f) A tension measuring device should be used on runs when pulling-force calculations indicate that allowable stresses may be approached.

g) Pulling tension will be increased when the cable is pulled off the reel. Turning the reel and feeding slack cable to the duct entrance will reduce the pulling tension.

h) A suitable feeder device should be used to protect and guide the cable from the cable reel into the raceway. The radius of the feeder device should not be less than the minimum bending radius of the cable. If a feeder device is not used, the cable should be hand-guided into the raceway.

i) A swivel should be attached between the pulling eye and the pulling cable. Projections and sharp edges on pulling hardware should be taped or otherwise covered to protect against snagging at conduit joints and to prevent damage to the conduit.

j) The direction of pulling has a large influence on the pulling tension in conduit runs containing bends. Whenever a choice is possible, the cable should be pulled so that the bend or bends are closest to the reel. The worst condition possible is to pull out of a bend at or near the end of the run.

k) Pulling instructions for all cable should follow the cable manufacturer's recommendations.

l) Cable should be pulled only into clean raceways. An appropriately-sized mandrel should be pulled through all underground ducts prior to cable pulling. Any abrasions or sharp edges that might damage the cable should be removed.

m) After cable installation has started, trays and trenches should be cleaned periodically as necessary to prevent the accumulation of debris.

Copyright © 2008 IEEE. All rights reserved.

n) Sufficient cable slack should be left in each manhole and temporarily supported so that the cable can be trained to its final location on racks, hangers, or trays along the sides of the manhole. Cable joints should not be placed directly on racks or hangers (IEEE Std 404™-2000 [B54]).

o) The use of single- or multi-roller cable sheaves of the proper radius should be used when installing cable around sharp corners or obstructions. Minimum bending radius should never be less than that recommended by the manufacturer.

p) Cables should be installed in raceway systems that have adequately sized bends, boxes, and fittings so that the cable manufacturer's minimum allowable bending radii and sidewall pressures for cable installations are not violated. Guidance for the number of bends between pull points and guidance on conduit fill can be found in the NEC [B100].

q) Cables should be identified by a permanent marker at each end in accordance with the design documents.

r) Careful consideration should be given not only to design engineering and material cost, but also to the installed cost for the initial as well as the ultimate installation. Maintenance and replacement costs also should be considered. It is desirable that the system be designed so that additions and changes can be made with ease, economy, and minimum outages.

s) The ends of all cables should be properly sealed during and after installation to prevent moisture collection as ambient temperature and humidity change.

Table L.1—Low temperature limits for cable handling and pulling [a]

Cable insulation or jacket material	Low temperature limits	
	Celsius	Fahrenheit
EPR low temperature PVC	−40	−40
CPE	−35	−31
PVC	−10	+14
CSPE	−20	−4
Neoprene (PCP)	−20	−4
XLPE	−40	−40
Paper-insulated, lead-sheathed	−12	+10

[a] If a cable has an insulation and jacket with different materials, the higher temperature limit should be used.

L.2 Supporting cables in vertical runs

Recommendations for supporting special cables such as armored, shielded, and coaxial should be obtained from the cable manufacturer.

The weight of a vertical cable should not be supported by the terminals to which it is connected. To prevent damage by deformation due to excessive bearing pressure or cable tension, vertically run cables should be supported by holding devices in the tray, in the ends of the conduit, or in boxes inserted at intervals in the conduit system.

Cables with copper conductors, regardless of their voltage class, installed in vertical runs should be supported in accordance with Table L.2.

Copyright © 2008 IEEE. All rights reserved.

Table L.2—Cable vertical support distances

Maximum distances between cable supports		
Conductor sizes	**Maximum distance**	
AWG or kcmil	**(ft)**	**(m)**
14 to 1/0	100	30
2/0 to 4/0	80	24
250 to 350	60	18
Over 350 to 500	50	15
Over 500 to 750	40	12
Over 750	35	10

L.3 Securing cables in vertical runs

Cables installed in vertical cable tray should be secured to the cable tray at least every 1.5 m (5 ft).

L.4 Training cables

Cables installed in trays should be neatly trained to facilitate identification and removal and to maximize tray fill.

Copyright © 2008 IEEE. All rights reserved.

Annex M

(normative)

Acceptance testing

This annex provides guidance for the testing of cables after installation, but before their connection to equipment, and includes cable terminations, connectors, and splices.

M.1 Purpose

The purpose of these tests is to verify that cable insulation damage did not occur during storage and installation and that the cable was properly spliced and terminated. It should be noted, however, that these tests may not detect damage that may eventually lead to cable failure in service, e.g., damage to the cable jacket or insulation shield on medium-voltage cable, or to low-voltage cable insulation.

M.2 Tests

Safety precautions should be observed during all phases of testing. Cable ends should be properly cleaned of all conducting material. Cable test results, environmental conditions, and data should be recorded and filed for maintenance reference. The following "megger" test may be performed on each control and power circuit, as applicable for multiconductor or shielded cables, in conjunction with the cable manufacturer's recommendations. It should be noted that in dry conditions, the integrity of single-conductor cables may be difficult to validate with this test. This is true even in metallic conduits unless the damaged area happens to be in contact with the conduit:

The test voltage should be a minimum of 500 V (dc). The minimum acceptable insulation resistance is: R in M · Ω = (rated voltage in kilovolts + 1) × 304.8/length in meters (1000/length in feet).

a) See Table M.1 for 600 V cable the resistance values.

Table M.1—Resistance values for 600 V cable

Length m (ft)	R M·Ω
30.5 (100)	16
61.0 (200)	8
91.4 (300)	5.3
122 (400)	4
152 (500)	3.2
183 (600)	2.7
213 (700)	2.3
244 (800)	2
274 (900)	1.8
305 (1000)	1.6

b) Testing of control cable and prefabricated cable assemblies in a similar manner is suggested. The cable manufacturer's recommendations should always be considered.

Copyright © 2008 IEEE. All rights reserved.

Annex N

(normative)

Recommended maintenance and inspection

N.1 General

In regard to maintenance and inspection practices, manufacturer's recommendations should be followed if they exist, unless operating experience dictates otherwise. The following information should be viewed as general guidelines only, and should be modified to suit the situation.

Furthermore, it is understood that not all sections of the cable runs can be inspected due to the routing of the circuit through ducts or conduits, or because it is direct buried or installed in a heavily utilized cable tray. Therefore, decisions based on inspections of accessible areas may have some associated risk since the "bad" section of the cable may not be visible or easily accessible. It may be assumed that if one section is in poor shape, then the nonaccessible sections could be in worse shape. Testing, coupled with inspections, is the best way to reduce this risk.

N.2 Inspections

Normally inspections are done only when system investigations indicate the problem may lie in the cable connection, or when a condition assessment is required for potential sale of the facility, cable aging, or as part of a reliability-centered-maintenance program.

Visual inspection consists of looking for cracks, splits or cuts in the cable jackets (or outer covering), or possible signs of wear due to cable movement during thermal cycling or some other item rubbing against the cable. These breaches in the cable's protective jacket or insulation may allow moisture to infiltrate, which can lead to corrosion of the shielding, or cable sheath, or an electrical fault. Bulges and indentations can indicate moisture ingress or insulating material movement, which can also lead to corrosion or insulation failure.

The cable termination connection should be tested for tightness by lightly tugging on them, while any bolted connections should be checked for proper tightness. Infra-red technology can also be used for larger power cables to check for overheating, which can indicate loose connections if clearances cannot be obtained.

N.3 Testing methods

a) Continuity: A "ring-through" test using a simple door bell and battery circuit (or a cable tracing device) can be used to confirm the cable is connected to the correct location. The cable circuit needs to be taken out of service during this testing though. This test method can also be used to check the continuity of any cable sheath, shield, or grounding connection.

b) Insulation: A "leakage test" uses a device such as hand "megger" to apply a voltage equivalent to at least 50% of the cable's voltage rating to the cable's conductor and a ground point to test the cable's insulation. The voltage is applied for one minute. The cable circuit needs to be taken out of service and disconnected during this testing, yet any sheath or shield should remain in place and grounded. Insulation in good condition should have minimum leakage current, and the voltage should not vary more than 10% (of the selected test voltage). The leakage current should be steady or decreased from the initial reading. Unstabilized or increasing current levels over time indicate deterioration.

Copyright © 2008 IEEE. All rights reserved.

For all 600 V rated cables, a minimum of 500 V (dc) is recommended to ensure problems are properly detected. Since the magnitude of leakage current is highly dependent upon a variety of factors (temperature, humidity, condition of insulating material, length of cable under test), these conditions should be recorded to assess deterioration over time.

c) Shield: Any protective cable shield can also be tested using this same method, but the voltage applied should only be 50% of its nominal rating, and it should be applied to cable's sheath or shield, which has been disconnected and isolated from ground.

An "insulation test" again using a device such as hand "megger" to apply a voltage between the cable's conductor and its sheath or shield at equivalent to 50% of the cables voltage rating can be used to test the cable's insulation. The duration of this test should be one minute. The cable's sheath or shield and the conductor should be disconnected and isolated from ground. Again, insulation in good condition should have minimum leakage current, and the voltage should not vary more than 10%.

For cables without sheaths or shielding it should be noted that there is no difference between results of the "leakage test" or "insulation test."

N.4 Maintenance

The cycle of a regular maintenance program for cable and wires will depend on the age of the cables, the operating and environment conditions, type of cable, and outage availability. It is recommended that a visual inspection be done on at least an annual basis and that testing be done only when a problem is suspected.

Cables installed in extreme conditions such as wet or high-temperature locations may need to be inspected and tested on a more frequent basis depending on their age.

For cables with potheads or heat shrink-type terminations, which are installed in high-contamination areas, it is recommended that they be cleaned on a regular basis dictated by operating experience to avoid the risk of electrical flashover to ground. Cable terminations should be cleaned using the manufacturer's recommendations, with the cable circuit out of service and isolated. Cleaning with high-pressure water is possible in some outdoor locations, but hand cleaning is preferred.

For cable circuits installed in less hostile environments, the amount of dust or other matter collecting on the terminations (or around them) needs to be monitored on a regular basis to ensure the electrical clearances are not compromised. Again the same cleaning methods apply.

Copyright © 2008 IEEE. All rights reserved.

Annex O

(informative)

Example for small substation

O.1 General

This annex presents a typical distribution substation and steps through the process of designing the cable system for it. Typical values are used for this sample and are for illustration purposes only.

O.2 Design parameters

Details of the substation are provided in Table O.1 through Table O.4 and in the one line diagram (see Figure O.1). Each circuit breaker is controlled remotely by an energy management system (EMS) and locally from the control building. An RTU is installed in the control building and is connected to the EMS via the local phone company system. Metering data is obtained from the electronic protective relays (often referred to as intelligent electronic devices or IEDs).

The control building is supplied as a prefabricated module with lighting, receptacles, fire protection, security, heating, air conditioning, and ventilation. All wiring for the control building is specified by the supplier according to the NEC [B100].

AC supplies are also required for auxiliary circuits to outdoor lighting and power receptacles for installation and testing equipment such as SF6 gas carts and transformer oil plants.

Outdoor lighting consists of four 100 W high-pressure sodium (HPS) floodlights mounted on equipment structures. The four 100 W HPS floodlights will be supplied by two circuits, each with two of the floodlights (i.e., 200 W per circuit).

Outdoor receptacles will be provided at following two central locations: 1) near the transformers and 69 kV circuit breakers and 2) in the 12 kV equipment area. The maximum load expected for these receptacles is 240/120 V, 40 A, 90% PF.

Table O.1—Site conditions

Parameter	Value
Ambient temperature	0 °C to 40 °C
Lightning activity, number of flashes per 100 km/yr	4
Earth conditions	Dry, rocks may be found in soil

Table O.2—Electric system parameters

Parameter	HV	MV
Nominal voltage, phase to phase	69 kV	12.47 kV
Frequency	60	60
Maximum fault current, three-phase, rms	15 kA	10 kA

Copyright © 2008 IEEE. All rights reserved.

Table O.3—Substation parameters

Parameter	Value
DC system	
Type	60 cell battery with charger
Voltage	125 V (dc) nom, 105 V (dc) EOD [a]
Continuous load	5 A
Fault level	1 kA
AC station service system	
Type	1 phase, 15 kVA
Voltage	240/120 V
Load	15 kVA
Short-circuit level (I_{SC})	1.5 kA
Circuit breaker clearing time	Maximum two cycles at I_{SC}
Circuit breaker (69 kV and 12.47 kV)	
CTs	2000:5 A, C400, 2.0 Ω total burden
Trip coil	10 A, 90 V (dc) to 140 V (dc)
Close coil	5 A, 90 V (dc) to 140 V (dc)
Alarms and status points	5
Spring charging motor	10 A run, 24 A inrush, 115 V (ac) ± 10%
AC load	60 W light, 15 A receptacle, 200 W heater
Transformer	
Cooling fan motors	6 × 1 kW, 230 V (ac)
Alarm and status points	10
Control cabinet ac load	60 W light, 15 A receptacle, 200 W heater, 120 V (ac)
Motor-operated disconnect switches (69 kV and 12.47 kV)	
Motor	2 A run, 5 A inrush, 125 V (dc), 90 V (dc) minimum
Cabinet heater	30 W at 120 V (ac)
Status points	3
Voltage transformer	
Secondaries	Wye connected

[a] EOD is the end of discharge, which is used as the supply voltage for critical dc circuits.

Table O.4—Design parameters

Voltage drop criteria	
DC supply voltage for critical circuits	105 V (dc) (EOD) [a]
DC supply voltage	116 V (dc)
AC supply voltage	120/240 V (ac)
Feeders circuit voltage drop	3% maximum
Branch circuit voltage drop	3% maximum
Overall voltage drop	5% maximum
VT voltage drop	1% maximum

[a] EOD is the end of discharge, which is used as the supply voltage for critical dc circuits.

Copyright © 2008 IEEE. All rights reserved.

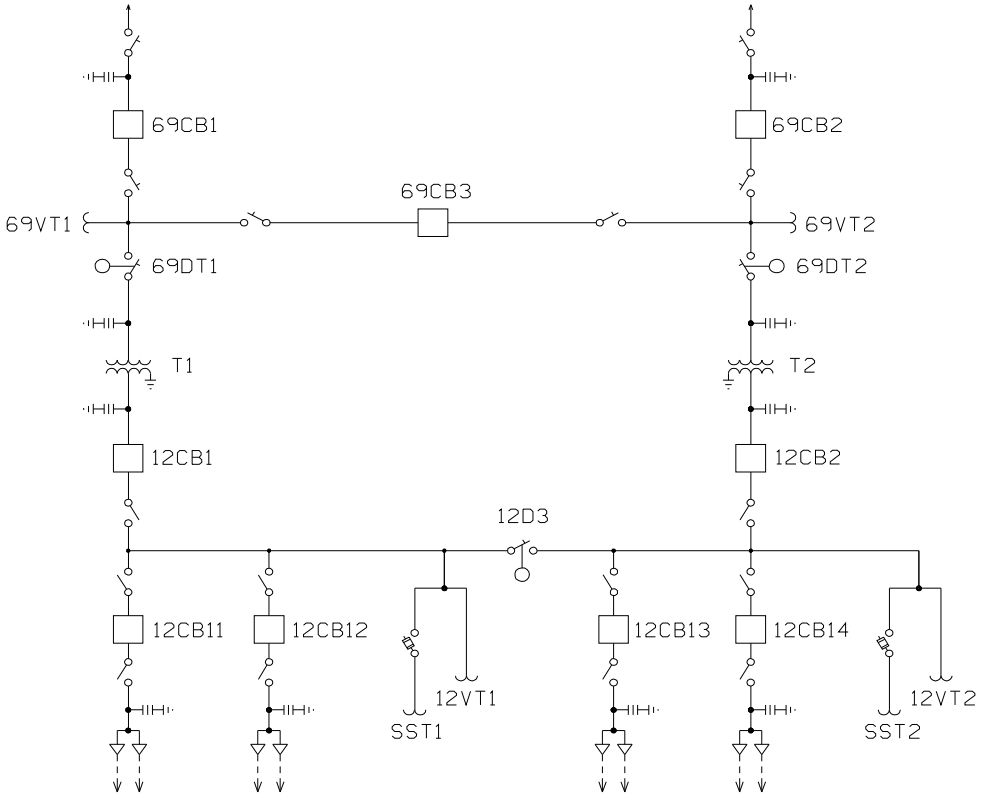

Figure O.1—One line diagram

O.3 Select cables construction

O.3.1 Conductor material

Refer to C.1.1.

Copper conductor will be used for all cables in this installation. Conductors will be stranded. The minimum size for field cables will be 18 AWG for mechanical strength. The minimum size for cables in the control building will be 22 AWG.

NOTE—For conductor sizes 18 AWG and smaller, the mechanical strength may be lower than required for pulling. A larger conductor size may be required to increase the mechanical strength for difficult (e.g., long runs, many bends) pulling situations.

O.3.2 Insulation

Refer to C.5.

The cables will be installed in a dry environment with an ambient temperature up to 40 °C. The cables will be used both indoors and outdoors. PVC conduit will be used outdoors for both above ground and below ground installations. Cable tray will be used indoors. PVC conduit cannot be used with cables having operating temperatures above 75 °C. This means that cables with a temperature rating up to 75 °C may be used. Those with a higher temperature rating may also be used, but not at a temperature above 75 °C. Other thermoplastic pipes can be used as conduit for operating temperatures above 75 °C, such as PE or chlorinated PVC.

Copyright © 2008 IEEE. All rights reserved.

All equipment being wired is rated for 75 °C wiring.

Various choices are available for this type of cable. Cables with XLPE insulation and an overall PE jacket will be used. Color coding would be based on national standards or the utility's standard.

O.3.3 Voltage rating

Refer to 4.3.2 and C.5.1.

The voltages used for the protection, control and station service supplies are either 125 V (dc) or 120/240 V (ac). Voltage rating of either 600 V or 1000 V could be considered. A cable voltage rating of 600 V will be selected for this installation since the voltage rating is over twice the highest voltage used.

O.3.4 Shielding and grounding

Refer to 4.7 and Annex G.

The voltage levels are 69 kV and 12.47 kV. There are no capacitors or high-voltage equipment (230 kV or greater) in the station meaning there are no significant sources of EMI. The lightning frequency is small and can be ignored as an EMI source. Based on this, nonshielded cable will be used.

O.3.5 Number of conductors

Cables with 1, 3, 4, 7, 12, and 19 conductors are available for the project. Cables with 22 AWG or smaller conductors are available with 3 pair, 6 pair, or 18 pair.

O.4 Determine raceway routing

Refer to Annex F.

The site is rectangular with equipment located by voltage level from high to low voltage and symmetrical when multiple equipment devices are used. (e.g., the two transformers are located adjacent to each other). Refer to the site plan in Figure O.2. The raceway design will be based on cost and practicality. Options considered include direct burial, conduit, tray, and trench.

The chosen raceway will consist of a main concrete cable trench with conduit runs to individual equipment. This results in short conduit runs that create few pulling problems and a main trench that is economical. The main trench also will accommodate future expansion of the substation. The main trench will be located away from the transformer. For this substation, 6 m (20 ft) was chosen as a safe distance to avoid spewing oil. Also, the cable trench will be located and the station sloped so oil spills do not flow into the cable trench.

The routing to each piece of equipment is shown in Figure O.3. The cable lengths from each piece of equipment to the control building are listed in Table O.5.

Copyright © 2008 IEEE. All rights reserved.

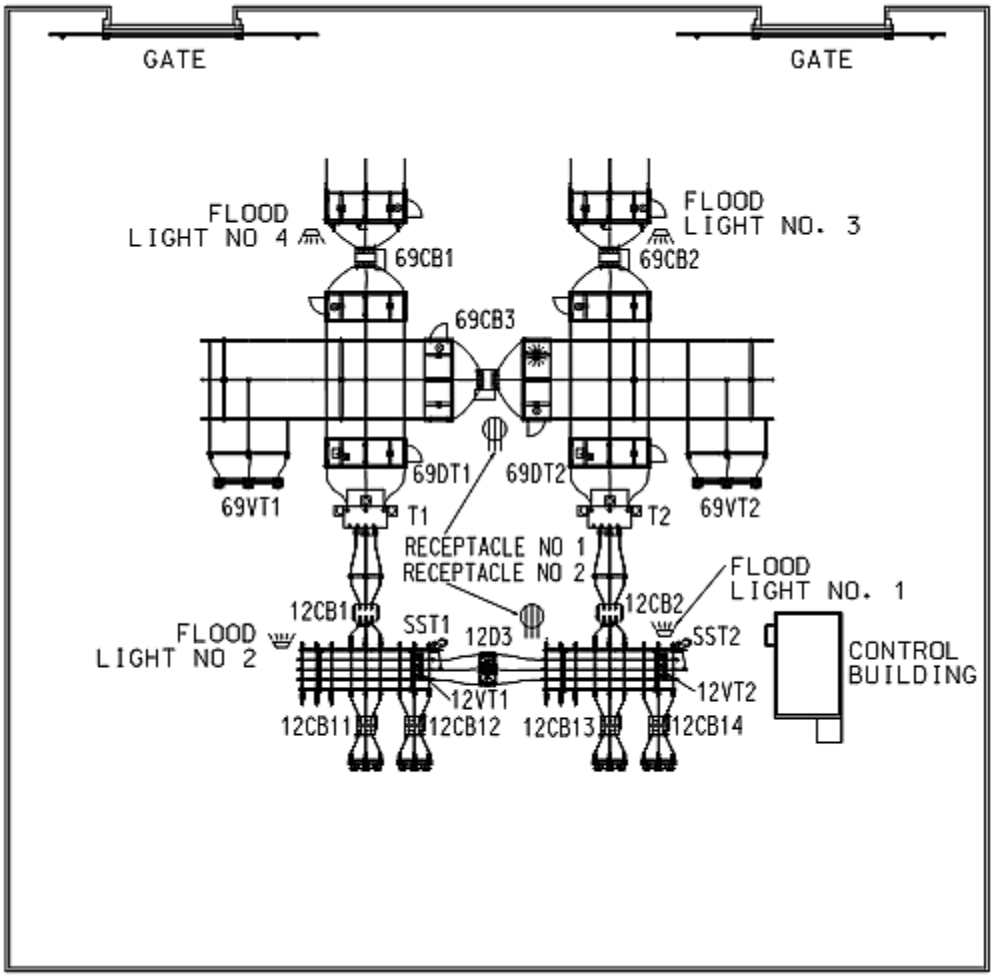

Figure O.2—Site plan

Copyright © 2008 IEEE. All rights reserved.

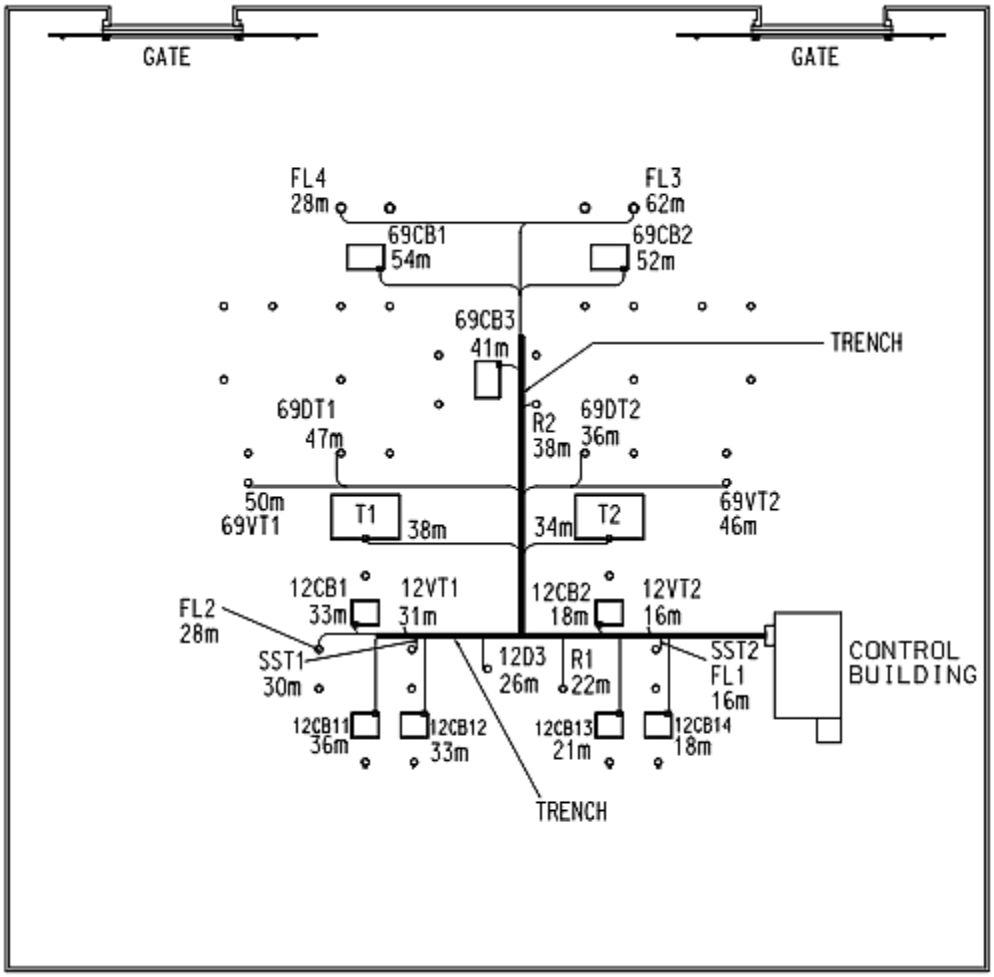

Figure O.3—Cable routing plan

Copyright © 2008 IEEE. All rights reserved.

Table O.5—Cable lengths

Equipment	Length (See NOTE)	
	(m)	(ft)
Transformer no. 1 (T1)	38	125
Transformer no. 2 (T2)	34	112
69 kV circuit breaker (69CB1)	54	177
69 kV circuit breaker (69CB2)	52	171
69 kV circuit breaker (69CB3)	41	135
12 kV circuit breaker (12CB1)	33	109
12 kV circuit breaker (12CB2)	18	60
12 kV circuit breaker (12CB11)	36	119
12 kV circuit breaker (12CB12)	33	109
12 kV circuit breaker (12CB13)	21	68
12 kV circuit breaker (12CB14)	18	59
69 kV motor operated disconnect switch (69DT1)	47	154
69 kV motor operated disconnect switch (69DT2)	36	118
12 kV motor operated disconnect switch (12D3)	26	84
69 kV VT (69VT1)	50	164
69 kV VT (69VT2)	46	152
12 kV VT (12VT1)	31	103
12 kV VT (12VT2)	16	54
Station service supply no. 1 (SST1)	30	100
Station service supply no. 2 (SST2)	16	54
Receptacle no. 1 (R1)	22	72
Receptacle no. 2 (R2)	38	125
Floodlight no. 1 (FL1)	16	52
Floodlight no. 2 (distance is between 1 and 2) (FL2)	28	92
Floodlight no. 3 (FL3)	62	203
Floodlight no. 4 (distance is between 3 and 4) (FL4)	28	92

NOTE—Lengths from equipment terminal cabinet to control building are rounded to the nearest meter or foot and include allowance for leads at both ends of a run.

O.5 Cable sizing

O.5.1 69 kV circuit breaker cables

Typically, the same conductor sizes will be used for protection and control cables for all circuit breakers. AC and dc supply conductors are often larger and may be sized for each circuit breaker.

O.5.1.1 Trip coil cables

The same conductor size will be used for all circuit breakers. The farthest circuit breaker is 54 m (176 ft) away from the control building. The battery voltage will be the end of discharge value of 105 V.

Copyright © 2008 IEEE. All rights reserved.

O.5.1.1.1 Ampacity

Per Articles 310-15 and 220-10 of the NEC [B100] for a noncontinuous load, the conductor ampacity will be 100% of the rated current.

Required ampacity = 10 A

Per Table 310-16 of the NEC [B100], for 75 °C conductor temperature and for a 40 °C ambient temperature, the smallest listed size is 14 AWG, which has an ampacity of 17.6 A (adjusted for ambient temperature). (Note that the over current protection for this conductor would be limited to 15 A per Article 240.4(D) of the NEC [B100].)

NOTE—The NEC ampacity is based on a continuous load. Using the NEC tables for noncontinuous loads will result in conservative sizing. However, ampacity is not usually the governing factor for cable selection and should not lead to over design.

O.5.1.1.2 Voltage drop

Refer to C.3.

The target voltage drop is 5% overall.

$$V_{drop} = 105\ \text{V} \cdot 0.05$$
$$= 5.25\ \text{V}$$

— Per unit length resistance for maximum circuit breaker cable length of 54 m (176 ft) at a temperature of 75 °C

$$R_{ac} = 5.25\ \text{V}/10\ \text{A}$$
$$= 0.525\ \Omega$$

NOTE—These conductors will be in nonmetallic conduits and $R_{dc} = R_{ac}$ for these smaller size conductors.

— Using Equation (C.5)

$$A = \{34.025591 \cdot (2 \cdot 54\ \text{m})/0.525\ \Omega \cdot [1 + 0.00393\ (75\ °\text{C} - 20\ °\text{C})\ ] \cdot 1.02 \cdot 1.04\}\ \text{at}\ 75\ °\text{C}$$
$$= 9030\ \text{cmil}$$

The next size up commercial size is 10 AWG (10 380 cmil).

— Actual voltage drop for 10 AWG

$$R_{dc} = \{34.025591/10\ 380\ \text{cmil} \cdot [1 + 0.00393\ (75\ °\text{C} - 20\ °\text{C})\ ] \cdot 1.02 \cdot 1.04\}\ \text{at}\ 75\ °\text{C}$$
$$= 3.9698\ \text{m}\Omega/\text{m}$$

$$V_{drop} = 3.9698\ \text{m}\Omega/\text{m} \cdot 54\ \text{m/run} \cdot 2\ \text{runs} \cdot 10\ \text{A}$$
$$= 4.29\ \text{V}$$

Copyright © 2008 IEEE. All rights reserved.

O.5.1.1.3 Short-circuit capability

Refer to C.4.

— Short-circuit magnitude is 1 kA.

— Trip time for ISC is no more than two cycles (0.033 s) for the equipment used. This time varies according to the specific equipment used.

— Short-time maximum conductor temperature is 250 °C per Table C.8 (for XLPE or EPR).

— Initial temperature is 75 °C.

NOTE—This is conservative. Given a noncontinuous load it is unlikely that the conductor temperature will be this high. Justification could be made for using a lower temperature (e.g., ambient temperature) if this became a governing factor in cable sizing.

— Using Equation (C.15b), the minimum conductor size for short-circuit capability is

$$A = I_{sc} / \{0.0125 / t_F \log_{10}[(T_2 + K_o)/(T_1 + K_o)] \}^{0.5}$$

$$A = 1 \text{ kA} / \{ (0.0125/0.033) \log_{10}[(250 + 234.5)/(75 + 234.5)] \}^{0.5}$$

$$A = 3699 \text{ cmil}$$

The next larger commercial size is 14 AWG (4110 cmil).

O.5.1.1.4 Cable selection

The minimum conductor size for ampacity, voltage drop, and short-circuit capability is 10 AWG. The resulting voltage drop for this conductor is 4.2%.

O.5.1.2 Close coil

The same cable will be used for both the trip and close coils. The conductor size of 10 AWG for the 10 A trip coil current will be suitable for the 5 A close coil.

The trip coil and close coil conductors will be in the same cable. Trip coil monitoring is also being used in this situation and will require one additional conductor. A total of five conductors are required. A seven-conductor cable will be used allowing two spare conductors for future use.

O.5.1.3 Current transformers

The secondary circuit conductors for the CTs will be sized here. The circuit breaker has CTs on both sides of the circuit breaker that are rated 2000:5 A, C400 for a total burden of 2.0 Ω. The same conductor size will be used for all circuit breakers. The farthest circuit breaker is 54 m (176 ft) away from the control building.

O.5.1.3.1 Ampacity

The CTs have a ratio of 2000:5 (ratio of 400). The maximum expected secondary current will be 0.86 A for fully rated transformer load of 41 MVA (41 MVA/69 kV/√3/400 = 343.1 A/400 = 0.86 A).

Per Article 220-10 of the NEC [B100] for a continuous load the conductor ampacity should be 125% of the load.

Required ampacity = 0.86 A · 1.25 = 1.1 A

Copyright © 2008 IEEE. All rights reserved.

Per Table 310-16 of the NEC [B100] for 75 °C conductor temperature and for a 40 °C ambient temperature, the smallest listed size is 14 AWG, which has an ampacity of 17.6 A (adjusted for ambient temperature).

O.5.1.3.2 Burden

The total burden for the CT circuit should be 2.0 Ω or less to maintain its accuracy. This will include the burden of the CT winding, the circuit conductors and relay(s).

— CT windings have a burden of approximately 0.0025 Ω/turn. For the CTs used on the circuit breaker, we have

Burden (CT) = 0.0025 Ω/turn · 2000/5 turns
= 1 Ω

— The relay has a burden of 0.01 Ω

— The maximum allowable resistance of the secondary conductors is

Burden (cond) = 2 − 1 − 0.01
= 0.99 Ω

— Using Equation (C.5)

A = {34.025591· (2 · 54 m)/0.99 Ω · [1 + 0.00393 (75 °C – 20 °C)] · 1.02 · 1.04} at 75 °C
= 4789 cmil

The next larger commercial size is 12 AWG (6530 cmil).

O.5.1.3.3 Short-circuit capability

Refer to C.4.

Short-circuit magnitude is 20 A (20 times full load current).

— Trip time is usually less than ten cycles, but failure of a protection circuit could lead to a duration of over 1 s. For this calculation, 2 s will be used.

Short-time maximum conductor temperature is 250 °C per Table C.8.

— Initial temperature is 75 °C.

— Using Equation (C.15b), the minimum conductor size for short-circuit capability is

$A = I_{sc} / \{0.0125 / t_F \log_{10} [(T_2 + K_o)/(T_1 + K_o)] \}^{0.5}$
$= 20 \text{ A} / \{ (0.0125/2) \log_{10} [(250 + 234.5)/(75 + 234.5)] \}^{0.5}$
= 573 cmil.

The next size up commercial size is 22 AWG (642 cmil).

O.5.1.3.4 Cable selection

The minimum conductor size for ampacity, burden, and short-circuit capability is 12 AWG.

Copyright © 2008 IEEE. All rights reserved.

O.5.1.4 Motor supply

The circuit breaker spring charging motor is operated at 115 V (ac), has a 10 A running current and a 24 A inrush current. The power factor is 90% and 25% for run and starting, respectively.

O.5.1.4.1 Ampacity

Per Articles 310-15 and 220-10 of the NEC [B100] for a noncontinuous load, the conductor ampacity will be 100% of the rated current.

Required ampacity = 10 A

Per Table 310-16 of the NEC [B100] for 75 °C conductor temperature and for a 40 °C ambient temperature, the smallest listed size is 14 AWG, which has an ampacity of 17.6 A (adjusted for ambient temperature).

O.5.1.4.2 Voltage drop

Refer to C.3.

— The target voltage drop is 5% overall

$$V_{drop} = 120\ \text{V} \cdot 0.05$$
$$= 6\ \text{V}$$

— Resistance at a temperature of 75 °C

$$R_{ac} = 6\ \text{V}/\ 10\ \text{A}$$
$$= 0.6\ \Omega$$

NOTE—These conductors will be in nonmetallic conduits and $R_{dc} = R_{ac}$.

— Using Equation (C.5)

$$A = \{34.025591 \cdot (2 \cdot 54\ \text{m})/0.6\ \Omega \cdot [1 + 0.00393\ (75\ °\text{C} - 20\ °\text{C})\ ] \cdot 1.02 \cdot 1.04\}\ \text{at}\ 75\ °\text{C}$$
$$= 7901\ \text{cmil}$$

The next size up commercial size is 10 AWG (10 380cmil).

— Check starting voltage

$$R_{dc} = \{34.025591/10\ 380\text{cmil} \cdot [1 + 0.00393\ (75\ °\text{C} - 20\ °\text{C})\ ] \cdot 1.02 \cdot 1.04\}\ \text{at}\ 75\ °\text{C}$$
$$= 4.2289\ \text{m}\Omega/\text{m}$$

$$V_{drop} = IR \cos \theta$$
$$= 24\ \text{A} \cdot (4.2289\ \text{m}\Omega/\text{m} \cdot 54\ \text{m/run} \cdot 2\ \text{runs})$$
$$= 11.0\ \text{V}$$

$$V_{motor} = 120\ \text{V} - 11.0\ \text{V} = 109\ \text{V}$$

The motor starting voltage is above the minimum voltage of 103.5 V (115 V – 10%).

Copyright © 2008 IEEE. All rights reserved.

O.5.1.4.3 Short-circuit capability

Refer to C.4.

Short-circuit level is 1.5 kA.

— Short-time maximum conductor temperature is 250 °C per Table C.8.

— Initial temperature is 75 °C.

NOTE—This is conservative. Given a noncontinuous load it is unlikely that the conductor temperature will be this high. Justification could be made for using the ambient temperature if this became a governing factor in cable sizing.

— Clearing time typically two cycles (0.033 s)

— Using Equation (C.15b)

$$A = I_{sc} / \{0.0125 / t_F \log_{10} [(T_2 + K_o)/(T_1 + K_o)] \}^{0.5}$$

$$= 1.5 \text{ kA} / \{(0.0125/0.033) \log_{10} [(250 + 234.5)/(75 + 234.5)] \}^{0.5}$$

$$= 5549 \text{ cmil}$$

The next larger commercial size is 12 AWG (6530 cmil).

O.5.1.4.4 Cable selection

A conductor size of 10 AWG will satisfy ampacity, voltage drop, and short-circuit capability requirements for the circuit breaker spring charging motor.

O.5.1.5 Auxiliary ac supply

The full load current is 17.3 A (15 A receptacle + {60 W + 200 W}/114 V).

O.5.1.5.1 Ampacity

The heaters will be assumed to be continuous loads and the light and receptacle noncontinuous loads. For ampacity 125% of continuous load and 100% of noncontinuous load will be used.

Required ampacity = (150 W · 1.25)/114 V + 15 A + (60 W/114 V) = 17.2 A

A 20 A protective device is used to protect the circuit. Per Table 310-16 and Section 240.4(D) of the NEC [B100] for 75 °C conductor temperature and for a 40 °C ambient temperature, 10 AWG has an ampacity of 30.8 A (adjusted for ambient temperature).

O.5.1.5.2 Voltage drop

The conductor will be sized for voltage drop based on an 8 A load connected to the receptacle with a unity power factor and both the heater and light on. This gives a current of 9.8 A {8 A + (60 W + 200 W) / 114 V}.

Refer to C.3.

— The target voltage drop is 5% overall.

$$V_{drop} = 120 \text{ V} \cdot 0.05$$

$$= 6.0 \text{ V}$$

Copyright © 2008 IEEE. All rights reserved.

— Per unit length resistance for maximum circuit breaker cable length of 54 m (176 ft) at a temperature of 75 °C

R_{ac} = 6.0 V/9.8 A
= 0.549 Ω

NOTE—For this size of cable in non metallic conduit $R_{dc} = R_{ac}$

— Using Equation (C.5)

A = {34.025591 · (2 · 54 m)/0.549 Ω · [1 + 0.00393 (75 °C – 20 °C)] · 1.02 · 1.04} at 75 °C
= 8641 cmil

The next larger commercial size is 10 AWG (10 380 cmil).

— Per unit resistance at a temperature of 75 °C

R_{ac} = R_{dc} = {34.02559/10 380 cmil · [1 + 0.00393 (75 °C – 20 °C)] · 1.02 · 1.04} at 75 °C
= 4.2289 mΩ/m

— Actual voltage drop for 10 AWG

V_{drop} = 4.2289 mΩ/m · 54 m/run · 2 runs · 9.8 A
= 4.5 V or 3.8%

O.5.1.5.3 Short-circuit capability

Refer to C.4.

Short-circuit level is 1.5 kA.

— Short-time maximum conductor temperature is 250 °C per Table C.8.

— Initial temperature is 75 °C.

NOTE—This is conservative. Given a noncontinuous load it is unlikely that the conductor temperature will be this high. Justification could be made for using the ambient temperature if this became a governing factor in cable sizing.

— Clearing time typically two cycles (0.033 s)

— Using Equation (C.15b)

$A = I_{sc} / \{0.0125 / t_F \log_{10} [(T_2 + K_o)/(T_1 + K_o)] \}^{0.5}$
$= 1.5 \text{ kA} / \{(0.0125/0.033) \log_{10} [(250 + 234.5)/(75 + 234.5)] \}^{0.5}$
= 5549 cmil

The next larger commercial size is 12 AWG (6530 cmil).

O.5.1.5.4 Cable selection

A 10 AWG conductor results in a voltage drop of 3.8%. This conductor size also satisfies the minimum size for ampacity and for short-circuit capability.

Copyright © 2008 IEEE. All rights reserved.

O.5.1.6 Alarm and status

Since the current in these conductors is small, they will not be individually sized. A 16 AWG conductor will be used for these applications. Five (5) status alarm and status points are required in this situation. This will require ten conductors. A 12-conductor cable will be used providing two spare conductors for future use.

O.5.2 Disconnect switch

O.5.2.1 Motor supply

Motorized disconnect switches have a motor operator that uses 125 V (dc), has a 2 A run current and a 5 A inrush current. It is not essential for the motors to be able to operate under all conditions (i.e., manual operation is possible even for motor operated disconnect switches). The disconnect switch motors are not critical equipment and are expected to operate at the battery end of discharge voltage.

O.5.2.1.1 Ampacity

The specified current is at the rated voltage of 125 V. The normal expected battery voltage is 116 V and equipment terminal voltage for a 5% voltage drop will be 110 V. The current will then be 2.16 A (2 A · 125 V/110 V).

Per Articles 310-15 and 220-10 of the NEC [B100] for a noncontinuous load the conductor ampacity will be 100% of the rated current.

Required ampacity = 2.3 A

Per Table 310-16 of the NEC [B100] for 75 °C conductor temperature and for a 40 °C ambient temperature, the smallest listed size is 14 AWG, which has an ampacity of 17.6 A (adjusted for ambient temperature).

O.5.2.1.2 Voltage drop

Refer to C.3.

— The target voltage drop is 5% overall

$$V_{drop} = 116\ \text{V} \cdot 0.05$$
$$= 5.8\ \text{V}$$

— Resistance at a temperature of 75°C

$$R_{ac} = 5.8\ \text{V} / 2.3\ \text{A}$$
$$= 2.552\ \Omega$$

NOTE—These conductors will be in nonmetallic conduits and $R_{dc} = R_{ac}$

— Using Equation (C.5)

$$A = \{34.025591 \cdot (2 \cdot 47\ \text{m})/2.552\ \Omega \cdot [1 + 0.00393\ (75\ °\text{C} - 20\ °\text{C})\ ] \cdot 1.02 \cdot 1.04\}\ \text{at}\ 75\ °\text{C}$$
$$= 1617\ \text{cmil}$$

The next larger commercial size is 18 AWG (1620 cmil).

Copyright © 2008 IEEE. All rights reserved.

O.5.2.1.3 Short-circuit capability

Refer to C.4.

— Short-circuit level is 1.0 kA

— Short-time maximum conductor temperature is 250 °C per Table C.8.

— Initial temperature is 75 °C.

NOTE—This is conservative. Given a noncontinuous load it is unlikely that the conductor temperature will be this high. Justification could be made for using the ambient temperature if this became a governing factor in cable sizing.

— Clearing time typically two cycles (0.033 s)

— Using Equation (C.15b)

$$A = I_{sc} / \{0.0125 / t_F \log_{10} [(T_2 + K_o)/(T_1 + K_o)] \}^{0.5}$$

$$= 1.0 \text{ kA} / \{ (0.0125/0.033) \log_{10} [(250 + 234.5)/ (75 + 234.5)] \}^{0.5}$$

$$= 3399 \text{ cmil}$$

The next larger commercial size is 14 AWG (4110 cmil).

O.5.2.1.4 Cable selection

A conductor size of 14 AWG will satisfy ampacity, voltage drop, and short-circuit capability requirements for the circuit breaker spring charging motor.

— Check starting voltage

$$R_{dc} = \{34.025591/4110 \text{ cmil} \cdot [1 + 0.00393 (75 \text{ °C} – 20 \text{ °C})] \cdot 1.02 \cdot 1.04\} \text{ at } 75 \text{ °C}$$

$$= 10.68 \text{ m}\Omega/\text{m}$$

$$V_{drop} = 10.68 \text{ m}\Omega/\text{m} \cdot 47 \text{ m/run} \cdot 2 \text{ runs} \cdot 5 \text{ A}$$

$$= 5.0 \text{ V}$$

$$V_{motor} = 116 \text{ V} – 5.0 \text{ V} = 111 \text{ V}$$

The motor starting voltage is above the minimum voltage of 90 V.

O.5.2.2 Status and alarms

Since the current in these conductors is small, they will not be individually sized. A 16 AWG conductor will be used for these applications. Three (3) position contacts are required in this situation. This will require six conductors. A seven-conductor cable will be used providing one spare conductor for future use.

NOTE—For conductor sizes 16 AWG and smaller, the mechanical strength may be lower than required for pulling. Additional conductor or a larger conductor size may be required to increase the mechanical strength of a cable.

O.5.2.3 Auxiliary ac supply

O.5.2.3.1 Ampacity

The heaters will be assumed to be continuous load.

Copyright © 2008 IEEE. All rights reserved.

Required ampacity = (30 W · 1.25)/114 V = 0.33 A

Per Table 310-16 and Article 240.4(D) of the NEC [B100] for 75 °C conductor temperature and for a 40 °C ambient temperature, the smallest listed size is 14 AWG, which has an ampacity of 17.6 A (adjusted for ambient temperature).

O.5.2.3.2 Voltage drop

Refer to C.3.

— The target voltage drop is 5% overall.

$$V_{drop} = 120\ \text{V} \cdot 0.05$$
$$= 6.0\ \text{V}$$

— Total circuit resistance for maximum cable length of 47 m (144 ft) at a temperature of 75 °C

$$R_{ac} = 6.0\ \text{V}/0.33\ \text{A}$$
$$= 22.8\ \Omega$$

NOTE—For this size of cable in non metallic conduit $R_{dc} = R_{ac}$.

— Using Equation (C.5)

$$A = \{34.025591 \cdot (2 \cdot 47\ \text{m})/22.8\ \Omega \cdot [1 + 0.00393\ (75\ °\text{C} - 20\ °\text{C})\ ] \cdot 1.02 \cdot 1.04\}\ \text{at}\ 75\ °\text{C}$$
$$= 181\ \text{cmil}$$

The smallest size used for field cables is 18 AWG (1620 cmil).

O.5.2.3.3 Short-circuit capability

Refer to C.4.

— Short-circuit level is 1.5 kA.

— Short-time maximum conductor temperature is 250 °C per Table C.8.

— Initial temperature is 75 °C.

— Clearing time typically two cycles (0.033 s).

— Using Equation (C.15b)

$$A = I_{sc} / \{0.0125 / t_F \log_{10} [\ (T_2 + K_o)/(T_1 + K_o)\ ]\ \}^{0.5}$$
$$= 1.5\ \text{kA} / \{(0.0125/0.033) \log_{10} [(250 + 234.5)/(75 + 234.5)]\ \}^{0.5}$$
$$= 5549\ \text{cmil}$$

The next larger commercial size is 12 AWG (6530 cmil).

Because the current is small, the operating temperature may be much lower than the assumed 75 °C. To see if a smaller conductor could be used, an approximation will be made by solving Equation (C.15b) for T_2 with T_1 at ambient. Using 14 AWG conductor, a temperature rise of 1° is expected. Initial temperature is 41 °C. Again using Equation (C.15b)

Copyright © 2008 IEEE. All rights reserved.

$A = I_{sc} / \{0.0125 / t_F \log_{10} [(T_2 + K_o)/(T_1 + K_o)] \}^{0.5}$

$= 1.5 \text{ kA} / \{ (0.0125/0.033) \log_{10} [(250 + 234.5) / (41 + 234.5)] \}^{0.5}$

$= 4944 \text{ cmil}$

The next larger commercial size remains 12 AWG.

O.5.2.3.4 Cable selection

A 12 AWG conductor is required to satisfy short-circuit capability. The resulting voltage drop is 0.04%

— Voltage drop for 12 AWG

$R_{ac} = R_{dc}$

$= \{34.025591/6530 \text{ cmil} \cdot [1 + 0.00393 (75 °C – 20 °C)] \cdot 1.02 \cdot 1.04\}$ at 75 °C

$= 5.9836 \text{ m}\Omega/\text{m}$

$V_{drop} = 5.9836 \text{ m}\Omega/\text{m} \cdot 47 \text{ m/run} \cdot 2 \text{ runs} \cdot 0.33 \text{ A}$

$= 0.17 \text{ V or } 0.14\%$

O.5.3 Transformer

O.5.3.1 Current transformers

The secondary conductors for the CTs will be sized here. The power transformer has CTs on both the high-voltage and low-voltage sides. On the high-voltage side, 2000:5 and 600:5 CTs are used. On the low-voltage side 2000:5 CTs are used. All CTs are C400 type, which can have a total burden of 2.0 Ω.

Conductors sized for the circuit breaker CTs will also be suitable for the power transformer CTs. Per O.5.1.3, the minimum conductor size for ampacity, burden and short-circuit capability is 12 AWG.

O.5.3.2 Status and alarms

Ten (10) status and alarm points are required for the power transformers. This will require a total of 20 conductors. Two 12-conductor cables will be used providing four spare conductors for future use.

O.5.3.3 Auxiliary ac supply

The power transformers have cooling fan motors with a total load of 6 kW at 240 V (ac), 95% PF. The control cabinet has 115 V (ac) loads consisting of a 60 W light, a 15 A receptacle, and a 200 W heater. For voltage drop, the largest load would be at maximum temperature with the fans operating, the light on, and an 8 A load connected to the receptacle. It is assumed the cabinet heater would not operate when the fans are operating.

NOTE—The 115 V loads are all on the same line, but it is be possible to put the loads on different lines to reduce the peak load. Also each load has its own over current protection after the external terminal block.

O.5.3.3.1 Ampacity

The load will be assumed to be continuous loads.

Copyright © 2008 IEEE. All rights reserved.

Required ampacity = {6 kW/230 V/0.95 PF + (200 W + 60 W)/115 V + 15 A} × 1.25
= 55.9 A

Per Table 310-16 of the NEC [B100] for 75 °C conductor temperature and for a 40 °C ambient temperature, 6 AWG with an ampacity of 57.2 A (adjusted for ambient temperature) is the smallest suitable size.

O.5.3.3.2 Voltage drop

The conductor will be sized for voltage drop for a load of

6 kW/230 V/0.95 + 60 W/115 V + 8 A = 36 A

Refer to C.3.

— The target voltage drop is 5% overall

V_{drop} = 240 V · 0.05
= 12.0 V

— Per unit length resistance for maximum circuit breaker cable length of 38 m (114 ft) at a temperature of 75 °C

$R_{dc} = R_{ac}$ = 12.0 V/ 36 A
= 0.332 Ω

— Using Equation (C.5)

A = {34.025591 · (2 · 38 m)/ 0.332 Ω · [1 + 0.00393(75 °C – 20 °C)] · 1.02 · 1.04} at 75 °C
= 10 003 cmil

The next larger commercial size is 10 AWG (10 380 cmil).

O.5.3.3.3 Short-circuit capability

Refer to C.4.

— Short-circuit level is 1.5 kA.

— Short-time maximum conductor temperature is 250 °C per Table C.8.

— Initial temperature is 75 °C.

— Clearing time typically two cycles (0.033 s).

— Using Equation (C.15b)

$A = I_{sc} / \{0.0125 / t_F \log_{10} [(T_2 + K_o)/(T_1 + K_o)] \}^{0.5}$
= 1.5 kA / { (0.0125/0.033) $\log_{10}$ [(250 + 234.5)/ (41 + 234.5)] }$^{0.5}$
= 4944 cmil

The next larger commercial size remains 12 AWG (6530 cmil).

O.5.3.3.4 Cable selection

A 6 AWG conductor is required for ampacity. Based on this conductor size, the voltage drop will be 1.7%.

Copyright © 2008 IEEE. All rights reserved.

— Actual voltage drop for 6 AWG

$R_{ac} = R_{dc}$ = {34.025591/36240 cmil · [1 + 0.00393 (75 °C – 20 °C)] · 1.02 ·1.04} at 75 °C
= 1.4891 mΩ/m

V_{drop} = 1.4891 mΩ/m · 38 m/run · 2 runs · 36 A
= 4.57 V or 1.9%

O.5.4 Voltage transformers

The secondary conductors for the VTs will be sized for steady-state operation. The VT secondaries are connected wye giving a voltage of 120 V/√3 or 69.28 V. The VTs have a maximum allowable burden of 75 VA at 85% PF. The same conductor size will be used for all VTs. The farthest VT is 50 m (148 ft) away from the control building.

O.5.4.1 Ampacity

Per Article 220-10 of the NEC [B100] for a continuous load, the conductor ampacity should be 125% of the load.

Required ampacity = 75 VA × 1.25/120 V/ √3 = 0.45 A

Per Table 310-16 of the NEC [B100] for 75 °C conductor temperature and for a 40 °C ambient temperature, the smallest listed size is 14 AWG, which has an ampacity of 17.6 A (adjusted for ambient temperature).

O.5.4.2 Voltage drop

Refer to C.3. Designing to the maximum burden will not provide for accurate voltages at the relay. Voltage drop will be the design parameter and the total burden will be verified to be below the maximum.

— The target voltage drop is 1% for high accuracy.

V_{drop} = 69.3 V · 0.01
= 0.69 V

— Conductor resistance for a balanced system voltage, maximum burden, and a temperature of 75 °C.

$R_{dc} = R_{ac}$ = 0.69 V/ 0.36 A
= 1.92 Ω

NOTE—For this size of cable in non metallic conduit $R_{dc} = R_{ac}$.

— Using Equation (C.5)

A = {34.025591 · 50 m)/ 1.31 Ω · [1 + 0.00393 (75 °C – 20 °C)] · 1.02 · 1.04} at 75 °C
= 1075 cmil

The next larger commercial size is 18 AWG (1620 cmil).

Copyright © 2008 IEEE. All rights reserved.

O.5.4.3 Short-circuit capability

The short-circuit capability of a VT is low and does not need to be considered.

O.5.4.4 Cable selection

The minimum conductor size for ampacity and voltage drop is 14 AWG. Allowing 0.1 A for relay burden (electronic relays have burdens in the order of 0.2 VA) the total burden will be 8.2 VA, less than the 75 VA maximum

— Actual voltage drop for 6 AWG

$R_{ac} = R_{dc}$ = {34.025591/ 4110 cmil · [1 + 0.00393 (75 °C – 20 °C)] · 1.02 · 1.04} at 75 °C
= 10.68 mΩ/m

Burden = (10.68 mΩ/m · 50 m · (0.1 A/0.85PF)^2) + (69.3 V · 0.1 A/ 0.85PF)
= 8.2 VA

O.5.5 Station service supply

The two station service supplies have a 15 kVA capacity. Only one is used to supply the load at a time. The total connected load with allowance for additional equipment in the future is 10 kW with an average power factor of 90%.

O.5.5.1 Ampacity

Required ampacity = (15 kVA · 1.25)/ 230 = 81.5 A

Per Table 310-16 of the NEC [B100] for 75 °C conductor temperature and for a 40 °C ambient temperature, the smallest suitable size is 3 AWG, which has an ampacity of 88 A (adjusted for ambient temperature).

O.5.5.2 Voltage drop

Load for voltage drop will be 10 kW at 90% PF or 48.3 A.

The transformer taps will be adjusted to provide a voltage of approximately 120 V at the service panel. The transformer has four taps of 1¼% each. Voltage drop will be calculated for the 3 AWG conductor required for ampacity.

— Per unit resistance at a temperature of 75 °C

$R_{ac} = R_{dc}$ = {34.025591/ 52620 cmil · [1 + 0.00393(75 °C – 20 °C)] · 1.02 · 1.04} at 75 °C
= 0.8342 mΩ/m

V_{drop} = 0.8342 mΩ/m · 38 m/run · 2 runs · 48.3 A
= 3.1 V or 1.3%

Setting the transformer tap at +1¼% will result in a service panel voltage of 239.9 V (240 · 101.25% – 3.1 V).

Copyright © 2008 IEEE. All rights reserved.

O.5.5.3 Short-circuit capability

Refer to C.4.

— Short-circuit level is 1.5 kA.

— Short-time maximum conductor temperature is 250 °C per Table C.8.

— Initial temperature is 75 °C.

— Clearing time typically two cycles (0.033 s).

— Using Equation (C.15b)

$$A = I_{sc} / \{0.0125 / t_F \log_{10} [(T_2 + K_o)/(T_1 + K_o)] \}^{0.5}$$
$$= 1.5 \text{ kA} / \{(0.0125/ 0.033) \log_{10} [(250 + 234.5)/ (41 + 234.5)] \}^{0.5}$$
$$= 4944 \text{ cmil}$$

The next larger commercial size remains 12 AWG (6530 cmil).

O.5.5.4 Cable selection

A 3 AWG conductor satisfies the minimum size for ampacity and short-circuit capability. The transformer taps will be used to adjust the voltage to the required level.

This conductor size, 3 AWG, may not be readily available. If not, it could be special ordered, or alternatively the next larger size could be used. In this case, the next larger size of 2 AWG conductor was selected.

O.5.6 Outdoor lighting

The four floodlights will be supplied by two circuits, each supplying two of the floodlights. High power factor ballasts with a 90% PF will be used. Two voltage drop philosophies may be used: placing the total load at the farthest point, or placing the load at their actual locations. The first method simplifies calculations, while the second method requires more calculations but is more accurate. The first method will be used because for a small load voltage drop will likely not be the governing factor for cable sizing.

O.5.6.1 Ampacity

Required ampacity = (2 · 100 W · 1.25)/ 0.9/ 115 V = 2.42 A

Per Table 310-16 of the NEC [B100] for 75 °C conductor temperature and for a 40 °C ambient temperature, the smallest suitable size is 14 AWG, which has an ampacity of 17.6 A (adjusted for ambient temperature).

O.5.6.2 Voltage drop (for circuit supplying FL3 and FL4)

Load for voltage drop will be 200 W at 90% PF or 1.93 A.

— The target voltage drop is 5% overall.

$$V_{drop} = 120 \text{ V} \cdot 0.05$$
$$= 6.0 \text{ V}$$

Copyright © 2008 IEEE. All rights reserved.

— Resistance at a temperature of 75 °C.

R_{ac} = 6.0 V/ 1.93 A
= 2.795 Ω

— Using Equation (C.5), the distance to FL4 is 90 m (62 m + 28 m).

A = {34.025591 · 90 m · 2)/ 2.795 Ω · [1 + 0.00393(75 °C – 20 °C)] · 1.02 · 1.04} at 75 °C
= 2827 cmil

The next larger commercial size is 14 AWG (4110 cmil).

O.5.6.3 Short-circuit capability

Refer to C.4.

— Short-circuit level is 1.5 kA.

— Short-time maximum conductor temperature is 250 °C per Table C.8.

— Initial temperature is 75 °C.

— Clearing time typically two cycles (0.033 s).

— Using Equation (C.15b)

$A = I_{sc} / \{0.0125 / t_F \log_{10} [(T_2 + K_o)/(T_1 + K_o)] \}^{0.5}$
$= 1.5 \text{ kA} / \{ (0.0125/ 0.033) \log_{10} [(250 + 234.5)/ (75 + 234.5)] \}^{0.5}$
= 5549 cmil

The next larger commercial size is 12 AWG (6530 cmil).

O.5.6.4 Cable selection

Short-circuit capability dictates the cable size in this case and requires a 12 AWG. The resulting voltage drop is 1.9%.

— Voltage drop for 12 AWG

$R_{ac} = R_{dc}$ = {34.025591 / 6530 cmil · [1 + 0.00393(75 °C – 20 °C)] · 1.02 · 1.04} at 75 °C
= 6.72 mΩ/m

V_{drop} = 6.72 mΩ/m · 90 m/run · 2 runs · 1.93 A
= 2.34 V or 1.9% (2.34/120 · 100%)

O.5.7 Outdoor receptacles

The two outdoor, 50 A receptacles will be provided. The largest full load current for equipment that will be used with the receptacles is 40 A at 90% PF. The cables will be sized for receptacle R2 and the same size cable will also be used for R1.

Copyright © 2008 IEEE. All rights reserved.

O.5.7.1 Ampacity

Required ampacity = 50 A · 1.25 = 62.5 A

Per Table 310-16 of the NEC [B100] for 75 °C conductor temperature and for a 40 °C ambient temperature, the smallest suitable size is 3 AWG, which has an ampacity of 79.2 A (adjusted for ambient temperature).

O.5.7.2 Voltage drop

Load for voltage drop will be 40 A/0.9 = 44.4 A.

— The target voltage drop is 5% overall.

$$V_{drop} = 240\ \text{V} \cdot 0.05$$
$$= 12.0\ \text{V}$$

— Resistance at a temperature of 75 °C

$$R_{ac} = 12.0\ \text{V}/\ 44.4\ \text{A}$$
$$= 0.27\ \Omega$$

— Using Equation (C.5)

$$A = \{34.025591 \cdot 38\ \text{m} \cdot 2)/\ 0.27\ \Omega \cdot [1 + 0.00393\ (75\ °\text{C} - 20\ °\text{C})] \cdot 1.02 \cdot 1.04\}\ \text{at}\ 75\ °\text{C}$$
$$= 12\ 356\ \text{cmil}$$

The next larger commercial size is 8 AWG (16 510 cmil).

O.5.7.3 Short-circuit capability

Refer to C.4.

— Short-circuit level is 1.5 kA.

— Short-time maximum conductor temperature is 250 °C per Table C.8.

— Initial temperature is 75 °C.

— Clearing time typically two cycles (0.033 s).

— Using Equation (C.15b)

$$A = I_{sc} / \{0.0125 / t_F \log_{10} [\ (T_2 + K_o)/(T_1 + K_o)\ ]\ \}^{0.5}$$
$$= 1.5\ \text{kA} / \{(0.0125/\ 0.033) \log_{10} [(250 + 234.5)/\ (75 + 234.5)]\ \}^{0.5}$$
$$= 5549\ \text{cmil}$$

The next larger commercial size is 12 AWG (6530 cmil).

O.5.7.4 Cable selection

Ampacity is the governing factor for this cable and requires a 3 AWG conductor. This conductor size (3 AWG) may not be readily available. If not, it could be special ordered, or the next larger size could be used. In this case, the next larger size (2 AWG) conductor was selected.

Copyright © 2008 IEEE. All rights reserved.

O.5.8 Supervisory control and data acquisition cables

The cable selections for the SCADA system are shown in Figure O.4. In this system, the IEDs collect substation data through the control, VT, and CT cables routed from the substation equipment. These cables are sized and routed in accordance with the corresponding sections of this example and are not discussed in further detail here. For the SCADA components; however, all cables are located entirely within the control building and are routed only from one component to the next. All currents are on the order of a few milliamps and a very small conductor size of 22 AWG or 24 AWG is sufficient. Note that the physical strength of the cable should be taken into account at these small sizes. In this example, the slightly larger 22 AWG is used for longer routes while the smaller 24 AWG is used for shorter routes.

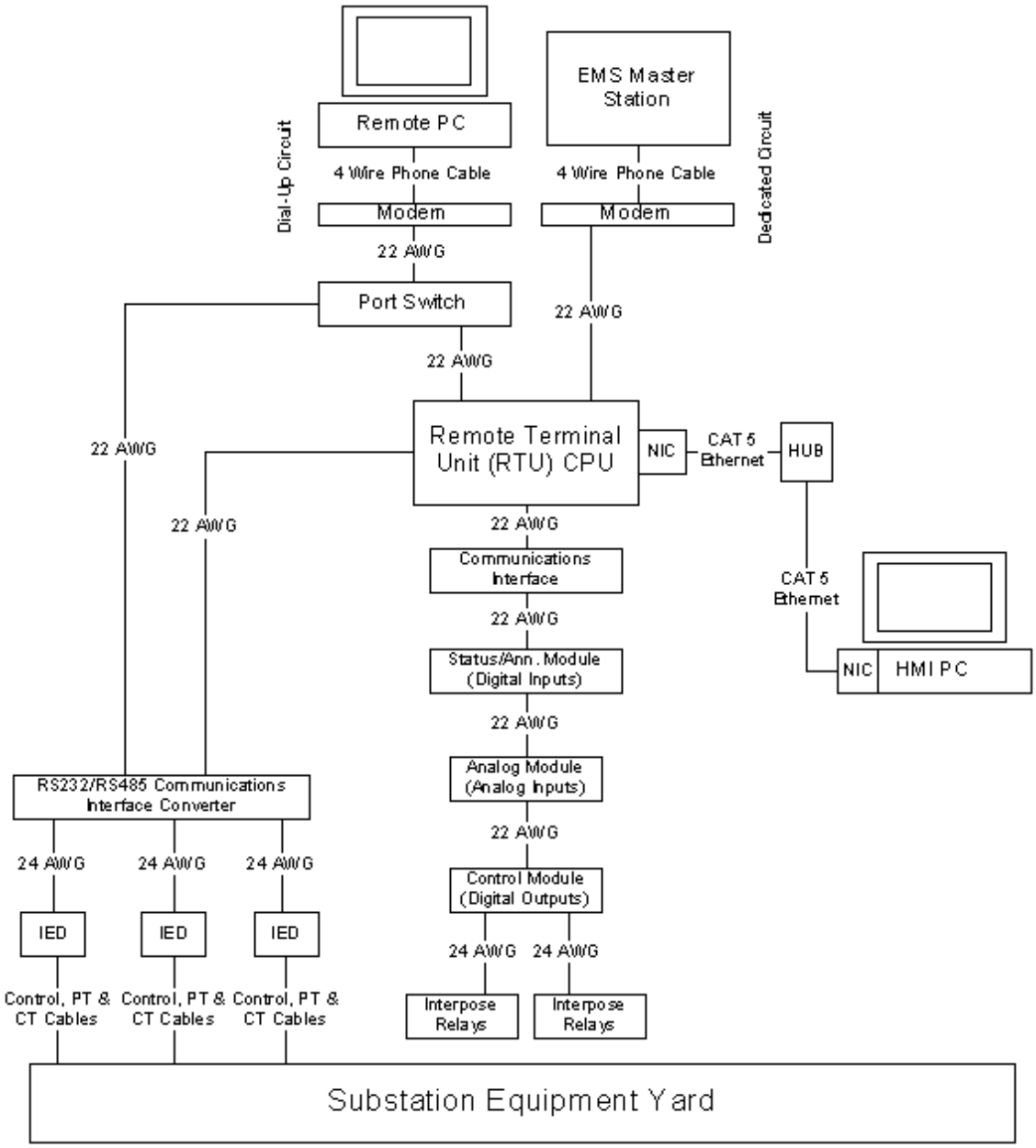

Figure O.4—SCADA cable selection

Copyright © 2008 IEEE. All rights reserved.

There are two communications circuits needed. In this example, there is one circuit to the EMS Master Station and one accessible from a remote site, such as an office computer or laptop. Given the high criticality of the EMS circuit, it should be dedicated. Since the remote site circuit will only be accessed periodically, a dial-up circuit is sufficient. A port switch on the dial-up circuit allows one phone line to be used by several devices, including the IEDs. A communications processor device could also be used.

The manufacturer typically standardizes the connections between the RTU and the peripheral modules. In this example, these cables would be ordered directly from the manufacturer. Typically, a small conductor such as 22 AWG is used.

In this example, the utility desires to connect the onsite HMI to the RTU through the utility's LAN connection at the substation. This connection requires an Ethernet hub as well as network interface cards (NICs) in both CPUs. Category 5 cable is standard and is used in this case. A serial connection can also be used if LAN access is not available.

Finally, the communications interfaces for all devices should be considered. Many IEDs provide an RS485 interface while the RTU is typically RS232. Therefore, an interface converter is installed to connect the IEDs to the RTU.

O.5.9 Cable summary

Table O.6 summarizes the field cables used for each type of equipment. Note that cables will not be run for CT or VT windings that will not be used initially.

Table O.6—Equipment cable summary

Equipment	Total number of cables	Cables (qty × type)
Transformer no. 1 (T1)	6	2×12C16, 1×2C6, 3×4C12
Transformer no. 2 (T2)	6	2×12C16, 1×2C6, 3×4C12
69 kV circuit breaker (69CB1)	6	1×10C16, 1×2C12, 1×2C10, 2×4C14, 1×7C10
69 kV circuit breaker (69CB2)	6	1×10C16, 1×2C12, 1×2C10, 2×4C14, 1×7C10
69 kV circuit breaker (69CB3)	7	1×10C16, 1×2C12, 1×2C10, 3×4C14, 1×7C10
12 kV circuit breaker (12CB1)	5	1×10C16, 1×2C12, 1×2C10, 1×4C14, 1×7C10
12 kV circuit breaker (12CB2)	5	1×10C16, 1×2C12, 1×2C10, 1×4C14, 1×7C10
12 kV circuit breaker (12CB11)	5	1×10C16, 1×2C12, 1×2C10, 1×4C14, 1×7C10
12 kV Circuit Breaker (12CB12)	5	1×10C16, 1×2C12, 1×2C10, 1×4C14, 1×7C10
12 kV Circuit Breaker (12CB13)	5	1×10C16, 1×2C12, 1×2C10, 1×4C14, 1×7C10
12 kV Circuit Breaker (12CB14)	5	1×10C16, 1×2C12, 1×2C10, 1×4C14, 1×7C10
69 kV motor operated disconnect switch (69DT1)	3	1×7C16, 1×2C12, 1×2C10
69 kV motor operated disconnect switch (69DT2)	3	1×7C16, 1×2C12, 1×2C10
12 kV motor operated disconnect switch (12D3)	3	1×7C16, 1×2C12, 1×2C10
69 kV VT (69VT1)	1	1×4C14
69 kV VT (69VT2)	1	1×4C14
12 kV VT (12VT1)	1	1×4C14
12 kV VT (12VT2)	1	1×4C14
Station service supply no. 1 (SST1)	1	1×3C2
Station service supply no. 2 (SST2)	1	1×3C2
Outdoor lighting	2	2×2C12
Outdoor receptacles	2	2×3C2

Copyright © 2008 IEEE. All rights reserved.

O.6 Design cable raceway

The raceway will consist of a combination of in-ground trenches and PVC conduit runs to individual pieces of equipment. See Table O.7 for details.

O.6.1 Redundant cable requirement

No redundant cables are required for this installation, since the consequences of equipment damage or system reliability is determined not severe.

O.6.2 Electrical segregation

The voltage levels used do not require any electrical segregation. Protection and control cables typically have no or minimal constant current flowing in them. As a result it is not customary to apply derating factors for the presence of adjacent cables. However, the main ac station service cables will have continuous current flow. Adjacent cables would then need to be derated due to the mutual heating. For this reason, it would be desirable to have separate routes for these cables.

O.6.3 Raceway sizing

The number and size of all cables going to each piece of equipment was used to prepare Table O.7. The ultimate cable area was based on having cables for all CT or VT secondary windings. Spare capacity allowances above that for the ultimate cable area will be provided. For this project, the spare capacity allowance have been chosen to be 25% for individual conduits and 50% for the two main trenches. The conduit sizes were selected based on conduit fill requirements of the NEC [B100].

A sample calculation conduit fill calculation is given for T1.

Ultimate cable area:	1377 mm^2
Cable area with 25% spare capacity:	1721 mm^2 (1377 $mm^2 \cdot 1.25$)
Allowable conduit fill for seven cables:	40%
Required conduit area:	4303 mm^2 (1721 mm^2 / 0.4)
Duct diameter:	74 mm ($d = 2\sqrt{\{4303/\pi\}}$)
Duct size selected:	75 mm (3 in)

Most conduit raceways are straight runs with a 90° bend from the cable trench and a 90° bend to the equipment. A few conduit raceways have an additional bend between the ends, but the total bending degrees does not exceed the recommended 270°.

A minimum bending radius of 12 times the cable OD will be used. The largest cable has a diameter of 25 mm giving a minimum conduit radius of 300 mm (25 mm · 12). PVC conduit bends are available with a range of radii with 450 mm (18 in), 600 mm (24 in), and 900 mm (36 mm) being common. Bends with a 450 mm radius will be used for this project and satisfies the minimum bending radius.

Copyright © 2008 IEEE. All rights reserved.

Table O.7—Summary of raceway sizes

Raceway section	Initial cable area (mm^2)	Ultimate cable area (mm^2)	Selected raceway size
Trench 1	14046	15906	450 mm × 75 mm
Trench 2	6719	7593	250 mm × 75 mm
Conduit to T1	1264	1377	75 mm duct
Conduit to T2	1264	1377	75 mm duct
Conduit to 69CB1	912	1025	75 mm duct
Conduit to 69CB2	912	1025	75 mm duct
Conduit to 69CB3	1025	1138	75 mm duct
Conduit to 12CB1	912	1025	75 mm duct
Conduit to 12CB2	912	1025	75 mm duct
Conduit to 12CB11	912	1025	75 mm duct
Conduit to 12CB12	912	1025	75 mm duct
Conduit to 12CB13	912	1025	75 mm duct
Conduit to 12CB14	912	1025	75 mm duct
Conduit to 69DT1	517	517	50 mm duct
Conduit to 69DT2	517	517	50 mm duct
Conduit to 12D3)	517	517	50 mm duct
Conduit to 69VT1	154	308	50 mm duct
Conduit to 69VT2	154	308	50 mm duct
Conduit to 12VT1	154	308	50 mm duct
Conduit to 12VT2	154	308	50 mm duct
Conduit to SST1	515	515	50 mm duct
Conduit to SST2	515	515	50 mm duct
Conduit to R1	515	515	50 mm duct
Conduit to R2	515	515	50 mm duct
Conduit to FL1	131	131	25 mm duct
Conduit FL1 to FL2	131	131	25 mm duct
Conduit to FL3	131	131	25 mm duct
Conduit FL3 to FL4	131	131	25 mm duct

O.6.4 Cable installation

A sample calculation is shown for the "Conduit to T1" and values for other conduits are summarized in Table O.9.

O.6.4.1 Maximum pulling tension

The maximum tension is calculated using Equation (J.1) and Equation (J.2). A general version of these equations is shown in Equation (O.1) to determine the minimum effective area when multiple sizes of cables are pulled within the same raceway.

$$\begin{aligned} T_{max} &= \mathrm{K\ f}\ n\ A \\ &= \mathrm{K}\ A_{eff} \end{aligned} \qquad \text{(O.1)}$$

where

f is 1.0 for one or two cables and 0.6 for three or more cables

n is the number of cables per size

A is the total area of each size

A_{eff} is the total effective area for multiple conductors in a cable, or combined cable sizes

Copyright © 2008 IEEE. All rights reserved.

The cables to T1 are 2×12C16, 1×2C6, and 3×4C12 (see Table O.6). A_{eff} for each conductor size is summarized in Table O.8.

Table O.8—A_{eff} for different cable sizes

Cables	Conductors, *n*	Conductor size (cmil)	Total area, *A* (cmil)	f	A_{eff} (cmil)
2	12	2 580 (16 AWG)	61 920	1.0	61 920
1	2	26 240 (6 AWG)	52 480	1.0	52 480
3	4	6 530 (12 AWG)	78 360	0.6	47 016

The minimum effective area (A_{eff}) is 47 016 cmil. The maximum pulling tension (note area was changed to kcmil) is determined by using Equation (O.1) as follows:

$$T_{max} = 35.6 \text{ N/kcmil} \cdot 47.016 \text{ kcmil}$$
$$= 1673 = 1.7 \text{ kN (376 lb)}$$

NOTE—An alternate method of determining the minimum effective area is to total the area for all cables and then use a percentage between 50% and 20%. The cable manufacturer should be consulted on their recommendation if this method is used.

A basket grip will be used to pull the cables. The recommended maximum tension is 4.45 kN, which is above the calculated maximum tension of 1.7 kN.

O.6.4.2 Jam ratio

Cable jamming may occur due to wedging of cables in the raceway. For the cables being pulled for T1, there are three cables of the same diameter.

Duct diameter = 75 mm

Cable diameter = 12 mm (4C/12 AWG)

$D/d = 75/12 = 6.25$

Since the ratio is above 3.0, jamming will not be a concern.

O.6.4.3 Pulling tension

The raceway route from the main cable trench to T1 consists of the following (see Figure O.3):

Section 1: Vertical bend down, 90°, 450 mm radius

Section 2: Straight run, 38 m long

Section 3: Horizontal bend, 90°, 450 mm radius

Section 4: Vertical bend up, 90°, 450 mm radius

Some situations may permit the cables to be pulled from either end and the tension would be calculated for pulling both ways. In this case, the cable will be laid in the trench and then pulled through the duct.

The cables will be pulled through PVC duct. The coefficient of friction, K, is 0.5 for unlubricated duct and 0.2 for lubricated duct. Lubrication will be used so K is 0.2.

Copyright © 2008 IEEE. All rights reserved.

O.6.4.3.1 Section 1

There may be an incoming tension if the cable is being pulled off reels. In this example, the cable is coming from a trench and it is anticipated that the cable would have been pulled into the trench and fed into the duct with rollers. The incoming tension will initially be the total mass of the cable length being pulled and it will gradually decrease as the cables are pulled into the raceway. The highest tension occurs near the end of the pull when the initial tension will be near zero. The initial tension will be assumed to be the remaining length that needs to be pulled in or the length of cable extending beyond the last bend to reach the termination point. This length is approximately 3 m (0.6 m for the bend and 2 m to reach above ground).

$T_{in} = m\,g$

$= 3\text{ m} \cdot 1.7\text{ kg/m} \cdot g$

$= 50\text{ N}$

Equation (J.15) may be used provided the incoming tension is greater than or equal $10Wr$. The initial tension of 50 N is greater than $10Wr$ (7.7 in this case) so the simplified formula may be used.

$$T_{out} = T_{in}\, e^{fc\theta}$$

For this case

$f = 0.2$

$c = 1.32$ (for six cables with D/d of 3.5)

$\theta = \pi/2$ radians

$T_{out} = 50\, e^{(0.2)(1.32)\pi/2}$

$= 50\, e^{0.41}$

$= 75.7\text{ N}$

O.6.4.3.2 Section 2

The pulling tension in a straight raceway is calculated according to Equation (J.9a)

$$T_{out} = T_{in} + Lmgfc$$

For this case

$L = 38$ m

$m = 1.7$ kg/m

$g = 9.8\text{ m/s}^2$

$f = 0.2$

$c = 1.32$ (for 6 cables with D/d of 3.5)

$T_{out} = 75.7\text{ N} + 38\text{m} \cdot 1.7\text{ kg/m} \cdot 9.8\text{ m/s}^2 \cdot 0.2 \cdot 1.32$

$= 75.7\text{ N} + 167.3$

$= 243\text{ N}$

Copyright © 2008 IEEE. All rights reserved.

O.6.4.3.3 Section 3

The simplified equation for calculating the pulling tension in horizontal bend is Equation (J.15)

$$T_{\text{out}} = T_{\text{in}}\ e^{fc\theta}$$

For this case

f = 0.2

c = 1.32 (for six cables with D/d of 3.5)

$\theta = \pi/2$ radians

$$T_{\text{out}} = 243\ e^{(0.2)(1.32)\pi/2}$$
$$= 243\ e^{0.41}$$
$$= 367.9\ \text{N}$$

O.6.4.3.4 Section 4

The simplified equation for calculating the pulling tension in vertical bend is Equation (J.15)

$$T_{\text{out}} = T_{\text{in}}\ e^{fc\theta}$$

For this case

f = 0.2

c = 1.32 (for six cables with D/d of 3.5)

$\theta = \pi/2$ radians

$$T_{\text{out}} = 367.9\ e^{(0.2)(1.32)\pi/2}$$
$$= 367.9\ e^{0.41}$$
$$= 557\ \text{N}$$

This is below the maximum pulling tension of 4.1 kN. If it was above the maximum pulling tension, options to reduce the pulling tension are to change the raceway design or reduce the coefficient of friction.

In this case, eliminating Section 3 can be done very easily by angling the raceway between the end points. The maximum pulling tension would then be reduced to 368 N in this case.

O.6.4.4 Sidewall bearing pressure

The maximum allowable sidewall bearing pressure (SWBP) for cables 8 AWG and smaller is 4380 N/m of radius (300 lbf/ft of radius). For more than four cables the formula becomes more complicated. The cables may be assumed to form a cradle form in the bend and the two bottom cables will share the load equally. Using Equation (J.7)

$$\text{SWBP} = c\ T_{\max}/2R$$
$$= 1.32\ (1.7\ \text{kN})/\ (2 \cdot 0.45\ \text{m})$$
$$= 2.494\ \text{kN/m}$$

Copyright © 2008 IEEE. All rights reserved.

The maximum allowable SWBP is acceptable.

O.6.4.5 Cable summary

Results for all raceways are given in Table O.9. The pulling tension is below the maximum for all runs except those to 69CB1 and 69CB2. In these cases, one bend in the run can be eliminated by angling the ducts between the end of the trench and the circuit breaker. When this is done, the pulling tensions reduce to 0.33 kN and 0.3 kN for 69CB1 and 69CB2, respectively. With these changes the pulling tensions are acceptable for all cables.

Table O.9—Summary of cable installation parameters

Raceway section	Number of cables	Maximum pulling tension (kN)	Total cable mass (kg/m)	Pulling tension (kN)
Conduit to T1	6	1.7	1.70	0.56
Conduit to T2	6	1.7	1.70	0.52
Conduit to 69CB1	5	0.5	1.04	0.50
Conduit to 69CB2	5	0.5	1.04	0.46
Conduit to 69CB3	6	0.5	1.26	0.31
Conduit to 12CB1	5	0.5	1.04	0.22
Conduit to 12CB2	5	0.5	1.04	0.15
Conduit to 12CB11	5	0.5	1.04	0.23
Conduit to 12CB12	5	0.5	1.04	0.22
Conduit to 12CB13	5	0.5	1.04	0.17
Conduit to 12CB14	5	0.5	1.04	0.15
Conduit to 69DT1	3	0.5	0.48	0.19
Conduit to 69DT2	3	0.5	0.48	0.16
Conduit to 12D3	3	0.5	0.48	0.09
Conduit to 69VT1	1	0.6	0.17	0.05
Conduit to 69VT2	1	0.6	0.17	0.04
Conduit to 12VT1	1	0.6	0.17	0.03
Conduit to 12VT2	1	0.6	0.17	0.02
Conduit to SST1	1	7.1	1.48	0.37
Conduit to SST2	1	7.1	1.48	0.28
Conduit to R1	1	7.1	1.48	0.24
Conduit to R2	1	7.1	1.48	0.35
Conduit to FL1	1	0.5	0.13	0.02
Conduit between FL1 and FL2	1	0.5	0.13	0.02
Conduit to FL3	1	0.5	0.13	0.04
Conduit between FL3 and FL4	1	0.5	0.13	0.02

Copyright © 2008 IEEE. All rights reserved.

Annex P

(informative)

Bibliography

[B1] AEIC CG5-2005, Underground Extruded Power Cable Pulling Guide.[13]

[B2] AIEE Committee Report, "Insulation level of relay and control circuits," *AIEE Transactions*, pt. 2, vol. 68, pp. 1255–1257, 1949.

[B3] ASTM E 119-2000a, Standard Test Methods for Fire Tests of Building Construction and Materials.[14]

[B4] ASTM B 8-2004, Standard Specification for Concentric-Lay-Stranded Copper Conductors, Hard, Medium-Hard, or Soft.

[B5] Baumgartner, E. A., "Transient protection of pilot wire cables used for high speed tone and ac pilot wire relaying," *presented at 20th Annual Conference for Protective Relay Engineers*, College Station, TX, pp. 24–26, Apr. 1967.

[B6] Birch, F. H., Burrows, G. H., and Turner, H. J., "Experience with transistorized protection in Britain—Part II: Investigations into transient overvoltages on secondary wiring at EHV switching stations," paper 31-04 presented at CIGRE, 1968.

[B7] Borgvall, T., Holmgren, B., Sunden, D., Widstrom, T., and Norback, K., "Voltages in substation control cables during switching operations," paper 36-05 presented at CIGRE, pp. 1–23, Aug. 24, 1970.

[B8] Buckingham, R. P., and Gooding, F. H., "The efficiency of nonmagnetic shields on control and communication cable," *IEEE Transactions on Power Apparatus and Systems,* vol. PAS-89, pp. 1091–1099, 1970.

[B9] Comsa, R. P., and Luke, Y. M. Yu., "Transient electrostatic induction by EHV transmission lines," *IEEE Transactions on Power Apparatus and Systems,* vol. PAS-88, pp. 1783–1787, Dec. 1969.

[B10] Dietch, Dienne, and Wery, "Progress report of Study Committee No. 4 (protection and relaying)—Appendix II: Induced interference in wiring feeding protective relays," paper 31-01 presented at CIGRE, 1968.

[B11] Dietrich, R. E., Ramberg, H. C., and Barber, T. C., "BPA experience with EMI measurement and shielding in EHV substations," *Proceedings of the American Power Conference,* vol. 32, pp. 1054–1061, Apr. 1970.

[B12] *EEI Underground Systems Reference Book*, 1957.

[B13] EIA/TIA-568, Commercial Building Telecommunications Wiring Standard.[15]

[B14] EIA/TIA-569, Commercial Building Standard for Telecommunications Pathways and Spaces.

[13] AEIC publications are available from the Association of Edison Illuminating Companies, 600 N. 18th Street, P. O. Box 2641, Birmingham, AL 35291-0992, USA (http://www.aeic.org/). AEIC publications are also available from Global Engineering Documents, 15 Inverness Way East, Englewood, Colorado 80112-5704, USA (http://global.ihs.com/).

[14] ASTM publications are available from the American Society for Testing and Materials, 100 Barr Harbor Drive, West Conshohocken, PA 19428-2959, USA (http://www.astm.org/).

[15] EIA publications are available from Global Engineering Documents, 15 Inverness Way East, Englewood, Colorado 80112, USA (http://global.ihs.com/).

Copyright © 2008 IEEE. All rights reserved.

[B15] EIA/TIA-607, Commercial Building Grounding and Bonding Requirements for Telecommunications.

[B16] EPRI EL-5036, Project 2334, *Power Plant Electrical Reference Series—Volume 4: Wire and Cable*.

[B17] EPRI EL-2982, Project 1359-2, *Measurement and Characterization of Substation Electromagnetic Transients*, Final Report, Mar. 1983.

[B18] EPRI EL-5990-SR, *Proceedings: Telephone Lines Entering Power Substations*, Aug. 1988.

[B19] EPRI EL-6271, "Research results useful to utilities now," *Distribution Cable Digest,* vol. 1.

[B20] Fillenberg, R. R., Cleaveland, G. W., and Harris, R. E., "Exploration of transients by switching capacitors," *IEEE Transactions on Power Apparatus and Systems,* vol. PAS-90, pp. 250–260, Jan./Feb. 1971.

[B21] "Fire protection and prevention practices within the electric utility industry," Edison Electric Institute Insurance Committee Report of the Fire Protection and Prevention Task Force, Mar. 1960.

[B22] Garton, H. L., and Stolt, H. K., "Field tests and corrective measures for suppression of transients on solid state devices in EHV stations," *Proceedings of the American Power Conference*, vol. 31, pp. 1029–1038, 1969.

[B23] Gavazza, R. J., and Wiggins, C. M., "Reduction of interference on substation low voltage wiring," *IEEE Transactions on Power Delivery*, vol. 11, no. 3, pp. 1317–1329, July 1996.

[B24] Gillies, D. A., and Ramberg, H. C., "Methods for reducing induced voltages in secondary circuits," *IEEE Transactions on Power Apparatus and Systems,* vol. PAS-86, pp. 907–916, July 1967.

[B25] Gillies, D. A., and Rogers, E. J., "Induced transient voltage reductions in Bonneville Power Administration 500 kV substation," *presented at the IEEE PES Summer Power Meeting*, San Francisco, CA, July 9–14, 1972, paper C 72-522-1.

[B26] Gillies, D. A., and Rogers, E. J., "Shunt capacitor switching EMI voltages, their reduction in Bonneville Power Administration substations," *IEEE Transactions on Power Apparatus and Systems,* vol. PAS-93, pp. 1849–1860, Nov./Dec. 1974.

[B27] Gillies, D. A., Rogers, E. J., and Ramberg, H. D., "Transient voltages-high voltage capacitor switching," *presented at the 20th Annual Conference for Relay Engineers*, College Station, TX, Apr. 1967.

[B28] Gooding, F. H., and Slade, H. B., "Shielding of communication cables," *AIEE Transactions (Communication and Electronics)*, vol. 75, pp. 378–387, July 1955.

[B29] Halman, T. R., and Harris, L. K, "Voltage surges in relay control circuits," *AIEE Transactions*, pt. 2, vol. 67, pp. 1693–1701, 1948.

[B30] Hammerlund, B., "Noise and noise rejection methods in control circuits, particularly for H.V. power stations," *Proceedings of the IEEE Electromagnetic Compatibility Symposium*, July 1968, pp. 216–227.

[B31] Hampe, G. W., "Power system transients with emphasis on control and propagation at radio frequencies," *presented at the 21st Annual Conference for Protective Relay Engineers*, College Station, TX, Apr. 1968.

[B32] Harvey, S. M., "Control wiring and transients and electromagnetic compatibility in GIS," *Proceedings of the International Symposium of Gas-Insulated Substations*.

Copyright © 2008 IEEE. All rights reserved.

[B33] Harvey, S. M., and Ponke, W. J., "Electromagnetic shielding of a system computer in a 230 kV substation," *presented at the IEEE PES Summer Meeting*, San Francisco, CA, July 20–25, 1975, paper F 75 442-4.

[B34] Hicks, R. L., and Jones, D. E. "Transient voltages on power station wiring," *IEEE Transactions on Power Apparatus and Systems*, vol. PAS-90, pp. 261–269, Jan./Feb. 1971.

[B35] IEC 60227, Parts 1–7 (with amendments and various editions for the parts), Polyvinyl chloride insulated cables of rated voltages up to and including 450/750 V.[16]

[B36] IEC 60228:2004 Ed. 3.0b, Conductors of Insulated Cables.

[B37] IEC 60245, Parts 1–8 (with amendments and various editions for the parts), Rubber insulated cables—Rated voltages up to and including 450/750 V.

[B38] IEC 60287, Parts 1-1 through 3-2 (with amendments and various editions for the parts), Electric cables—Calculation of the current rating.

[B39] IEC 60304:1982 Ed. 3.0b, Standard colours for insulation for low-frequency cables and wires

[B40] IEC 60332, Parts 1-1 through 3-25 (with amendments and various editions for the parts), Tests on electric and optical fibre cables under fire conditions.

[B41] IEC 61000-4-1:2006, Electromagnetic Compatibility (EMC)—Part 4-1: Testing and Measurement Techniques—Overview of IEC 61000-4 Series.

[B42] IEC 61000-4-4:2004, Electromagnetic Compatibility (EMC)—Part 4-4: Testing and Measurement Techniques—Electrical Fast Transient/Burst Immunity Test.

[B43] IEC 61000-4-5:2005, Electromagnetic Compatibility (EMC)—Part 4-5: Testing and Measurement Techniques—Surge Immunity Test.

[B44] IEEE Committee Report, "A guide for the protection of wire line communications facilities serving electric power stations," *IEEE Transactions on Power Apparatus and Systems*, vol. PAS-85, pp. 1065–1083, Oct. 1966.[17, 18]

[B45] IEEE Committee Report, "Bibliography on surge voltages in ac power circuits rated 600 volts and less," *IEEE Transactions on Power Apparatus and Systems*, vol. PAS-89, pp. 1056–1061, July/Aug. 1970.

[B46] IEEE 100™, *The Authoritative Dictionary of IEEE Standards Terms*, Seventh Edition.

[B47] IEEE Std 48™-1996 (Reaff 2003), IEEE Standard Test Procedures and Requirements for Alternating—Current Cable Terminations 2.5 kV through 765 kV.

[B48] IEEE Std 80™-2000, IEEE Guide for Safety in AC Substation Grounding.

[B49] IEEE Std 81™-1983, IEEE Guide for Measuring Earth Resistivity, Ground Impedance, and Earth Surface Potentials of a Ground System—Part 1: Normal Measurements.

[16] IEC publications are available from the Sales Department of the International Electrotechnical Commission, Case Postale 131, 3, rue de Varembé, CH-1211, Genève 20, Switzerland/Suisse (http://www.iec.ch/). IEC publications are also available in the United States from the Sales Department, American National Standards Institute, 11 West 42nd Street, 13th Floor, New York, NY 10036, USA.

[17] IEEE publications are available from the Institute of Electrical and Electronics Engineers, 445 Hoes Lane, Piscataway, NJ 08854, USA (http://standards.ieee.org/).

[18] The IEEE standards or products referred to in this bibliography are trademarks of the Institute of Electrical and Electronics Engineers, Inc.

Copyright © 2008 IEEE. All rights reserved.

[B50] IEEE Std 82™-1994, IEEE Standard Test Procedure for Impulse Voltage Tests on Insulated Conductors.

[B51] IEEE Std 83™ TH01-4-2 Fiber Optic Applications in Electrical Substations.

[B52] IEEE Std 367™-1987, IEEE Recommended Practice for Determining the Electric Power Station Ground Potential Rise and Induced Voltage from a Power Fault.

[B53] IEEE Std 400™-2001, IEEE Guide for Field Testing and Evaluation of the Insulation of Shielded Power Cable Systems.

[B54] IEEE Std 404™-2000, IEEE Standard for Extruded and Laminated Dielectric Shielded Cable Joints Rated 2500 to 500 000 V.

[B55] IEEE Std 442™-1981 (Reaff 1991), IEEE Guide for Soil Thermal Resistivity Measurements.

[B56] IEEE Std 487™-2000, IEEE Recommended Practice for the Protection of Wire-Line Communication Facilities Serving Electric Supply Locations.

[B57] IEEE Std 518™-1982 (Reaff 1990), IEEE Guide for the Installation of Electrical Equipment to Minimize Noise Inputs to Controllers from External Sources.

[B58] IEEE Std 532™-1993, IEEE Guide for Selecting and Testing Jackets for Underground Cables.

[B59] IEEE Std 576™-2000, IEEE Recommended Practice for Installation, Termination, and Testing of Insulated Power Cable as Used in Industrial and Commercial Applications.

[B60] IEEE Std 635™-2004, IEEE Guide for Selection and Design of Aluminum Sheaths for Power Cables.

[B61] IEEE Std 643™-1980 (Reaff 1991), IEEE Guide for Power-Line Carrier Applications.

[B62] IEEE Std 848™-1996, IEEE Standard Procedure for the Determination of the Ampacity Derating of Fire-Protected Cables.

[B63] IEEE Std 979™-1994, IEEE Guide for Substation Fire Protection.

[B64] IEEE Std 1026™-1995, IEEE Recommended Practice for Test Methods for Determination of Compatibility of Materials with Conductive Polymeric Insulation Shields and Jackets.

[B65] IEEE Std 1050™-1996, IEEE Guide for Instrumentation and Control Equipment Grounding in Generating Stations.

[B66] IEEE Std 1138™-1994 (Reaff 2002), IEEE Standard Construction of Composite Fiber Optic Overhead Ground Wire (OPGW) for Use on Electric Utility Power Lines.

[B67] IEEE Std 1143™-1994, IEEE Guide on Shielding Practice for Low Voltage Cables.

[B68] IEEE Std 1202™-1991, Standard for Flame Testing of Cables for Use in Cable Tray in Industrial and Commercial Occupancies.

[B69] IEEE Std 1210™-1996, IEEE Standard Tests for Determining Compatibility of Cable-Pulling Lubricants with Wire and Cable.

[B70] IEEE Std 1235™-2000, IEEE Guide for the Properties of Identifiable Jackets for Underground Power Cables and Ducts.

Copyright © 2008 IEEE. All rights reserved.

[B71] IEEE Std 1590™, IEEE Recommended Practice for the Electrical Protection of Optical Fiber Communication Facilities Serving, or Connected to, Electrical Supply Locations.

[B72] IEEE Std C37.1™-1994, IEEE Standard Definition, Specification and Analysis of Systems Used for Superivsory Control, Data Acquisition, and Automatic Control.

[B73] IEEE Std C37.90.1™-2002, IEEE Standard Surge Withstand Capability (SWC) Tests for Relays and Relay Systems Associated with Electric Power Apparatus.

[B74] IEEE Std C37.99™-2000, IEEE Guide for the Protection of Shunt Capacitor Banks.

[B75] IEEE Std C57.13™-1993, IEEE Standard Requirements for Instrument Transformers.

[B76] IEEE Std C57.13.3™-1983 (Reaff 1991), IEEE Guide for the Grounding of Instrument Transformer Secondary Circuits and Cases.

[B77] Jaczewski, M., and Pilatowicz, A., "Interference between power and telecommunication lines," paper 36-03 presented at CIGRE, pp. 1–8, Aug. 24, 1970.

[B78] Kotheimer, W. C., "Control circuit transients in electric power systems," *presented at the 21st Annual Conference for Protective Engineers*, College Station, TX, Apr. 22–24, 1968.

[B79] Kotheimer, W. C., "Control circuit transients," *Power Engineering*, vol. 73, pp. 42–45, Jan. 1969, and pp. 54–56, Feb. 1969.

[B80] Kotheimer, W. C., "The influence of station design on control circuit transients," *Proceedings of the American Power Conference*, vol. 21, pp. 1021–1028, 1969.

[B81] Kotheimer, W. C., "Theory of shielding and grounding of control cables to reduce surges," Pennsylvania Electric Association, Stroudsburg, PA, Oct. 5, 1973.

[B82] Martzloff, F. D., and Hahn, G. J., "Surge voltages in residential and industrial power circuits," *IEEE Transactions on Power Apparatus and Systems*, vol. PAS-89, pp. 1049–1056, July/Aug. 1970.

[B83] McKenna, D., and O'Sullivan, T. C., "Induced voltages in coaxial cables and telephone lines," paper 36-01 presented at CIGRE, pp. 1–10, Aug. 24, 1970.

[B84] "Methods of reducing transient overvoltages in substation control cables," British Columbia Hydro and Power Authority, Report No. 6903, June 15, 1969.

[B85] Mildner, R. C., Arends C. B., and Woodland, P. C., "The short-circuit rating of thin metal tape cable shields," *IEEE Transactions on Power Apparatus and Systems*, vol. PAS-87, pp. 749–759, Mar. 1968.

[B86] Neher, J. H., and McGrath, M. H., "The calculation of the temperature rise and load capability of cable systems," *AIEE Transactions*, vol. 76, pt III, pp. 752–772, Oct. 1957.

[B87] NEMA FB 2.10-2003, Selection and Installation Guidelines for Fittings for Use with Non-flexible Electrical Metal Conduit or Tubing (Rigid Metal Conduit, Intermediate Metal Conduit, and Electrical Metallic Tubing).[19]

[B88] NEMA FB 2.20-2003, Selection and Installation Guidelines For Fittings for Use With Flexible Electrical Conduit and Cable.

[19] NEMA publications are available from Global Engineering Documents, 15 Inverness Way East, Englewood, CO 80112, USA (http://global.ihs.com/).

Copyright © 2008 IEEE. All rights reserved.

[B89] NEMA FG 1-1993, Fiberglass Cable Tray Systems.

[B90] NEMA TC 3-2004 ,Polyvinyl Chloride (PVC) Fittings for Use with Rigid PVC Conduit and Tubing.

[B91] NEMA TC 6&8-2003, Polyvinyl Chloride (PVC) Plastic Utilities for Underground Installations.

[B92] NEMA TC 9-2004, Fittings for Polyvinyl Chloride (PVC) Plastic Utilities Duct for Underground Installation.

[B93] NEMA VE 1-2002, Metallic Cable Tray Systems.

[B94] NEMA VE 2-2001, Metal Cable Tray Installation Guidelines.

[B95] NEMA WC 51-2003/ICEA P-54-440, 3d ed., Ampacities of Cables in Open-Top Cable Trays.

[B96] NEMA WC 57-2004/ICEA S-73-532, Standard for Control, Thermocouple Extension, and Instrumentation Cables.

[B97] NEMA WC 70-1999/ICEA S-95-658-1999, Nonshielded Power Cables Rated 2000 Volts or Less for the Distribution of Electrical Energy.

[B98] NEMA WC 71-1999/ICEA S-96-659-1999, Standard for Nonshielded Cables Rated 2001–5000 Volts for use in the Distribution of Electric Energy.

[B99] NEMA WC 74-2000/ICEA S-93-639, 5–46 kV Shielded Power Cable for the Transmission and Distribution of Electric Energy.

[B100] NFPA 70, 2007 Edition, National Electrical Code® (NEC®).[20]

[B101] NFPA 72-2002, National Fire Alarm Code.

[B102] Pesonen, A., Kattelus, J., Alatalo, P., and Grand, G., "Earth potential rise and telecommunication lines," paper 36-04 presented at CIGRE, pp. 1–21, Aug. 24, 1970.

[B103] Perfecky, L. J., and Tibensky, M. S., "Methods for RMS symmetrical station ground potential rise calculations for protection of telecommunications circuits entering power stations," *IEEE Transactions on Power Apparatus and Systems*, vol. PAS-100, no. 12, pp. 4785–4794, Dec. 1981.

[B104] "Protection against transients," *Silent Sentinels (Westinghouse)*, RPL 71-4, Aug 1971.

[B105] Rackowski, et al., "Effect of switching shunt capacitors on buses protected by linear coupler differential relays," Westinghouse Electric Corporation, Pittsburgh, PA, Electric Utility Engineering Report No. 59–70.

[B106] "Recommended Good Practice for the Installation of Nonmetallic Jacketed Cables in Troughs and the Protection of Electrical Center Rooms," Factory Insurance Association, 9-69-15C.

[B107] Rifenburg, R. C., "Pipe-line design for pipe-type feeders," *AIEE Transactions (Power Apparatus and Systems)*, vol. 72, pp. 1275–1288, Dec. 1953.

[B108] Rorden, H. L., Dills, J. M., Griscom, S. B., Skooglund, J. W., and Beck, E., "Investigations of switching surges caused by 345 kV disconnecting switch operation," *AIEE Transactions (Power Apparatus and Systems)*, vol. 77, pp. 838–844, Oct. 1958.

[20] NFPA publications are available from Publications Sales, National Fire Protection Association, 1 Batterymarch Park, P.O. Box 9101, Quincy, MA 02269-9101, USA (http://www.nfpa.org/).

Copyright © 2008 IEEE. All rights reserved.

[B109] Sonnemann, W. K., "A laboratory study of high-voltage high-frequency transients," *presented at the 18th Annual Conference for Protective Relay Engineers*, College Station, TX, Apr. 1965.

[B110] Sonnemann, W. K., "Transient voltages in relay control circuits," *AIEE Transactions (Power Apparatus and Systems)*, vol. 80, pp. 1155–1162, Feb. 1962.

[B111] Sonnemann, W. K., "Transient voltages in relay control circuits—Part II," *presented at the 16th Annual Conference for Protective Relay Engineers,* College Station, TX, Apr. 1963.

[B112] Sonnemann, W. K., "Voltage surges in relay control circuits," *presented at the 13th Annual Conference for Protective Relay Engineers,* College Station, TX, Apr. 1960.

[B113] Sonnemann, W. K., and Felton, R. J., "Transient voltage measurement techniques," *IEEE Transactions on Power Apparatus and Systems*, vol. PAS-87, pp. 1173–1179, Apr. 1968.

[B114] Sonnemann, W. K., and Marieni, G. I., "A review of transients voltages in control circuits," *Silent Sentinels (Westinghouse)*, RPL 67-3, Apr. 1973.

[B115] "Substation fire prevention and protection," Fire Protection and Prevention Task Force, EE1 Insurance Committee, Nov. 1969.

[B116] Sullivan, R. J., "Transient and solid state circuits," *presented at the Pennsylvania Electric Association Conference,* May 21, 1971.

[B117] Sutton, H. J., "Transient pickup in 500 kV control circuits," *Proceedings of the American Power Conference*, Apr. 1970.

[B118] Sutton, H. J., "Transients induced in control cables located in EHV substation," *IEEE Transactions on Power Apparatus and Systems*, vol. PAS-89, pp. 1069–1081, July/Aug. 1970.

[B119] Williams, K. L., and Lawther, M. A., "Installing substation control cable," *Transmission and Distribution*, May 1971.

[B120] Woodland, F., Jr., "Electrical interference aspects of buried electric power and telephone lines," *IEEE Transactions on Power Apparatus and Systems*, vol. PAS-89, pp. 275–280, Feb. 1970.

Copyright © 2008 IEEE. All rights reserved.