Digital Power Controllers

Check for Samples: UCD3040, UCD3028, UCD3020

FEATURES

- Digital Control of up to Four Voltage Feedback Loops
- Up to Eight High-Resolution Digital Pulsewidth Modulated (DPWM) Outputs for Supporting a Wide Range of Offline, Isolated and Non-Isolated DC/DC Topologies
  - 250-ps DPWM Pulse-Width Resolution
  - 4-ns DPWM Frequency Resolution
  - Adjustable Phase Shift Between DPWM Outputs
  - Adjustable Dead Band Between Each DPWM Pair
  - Active-High or -Low DPWM Polarity
  - Up to 2-MHz DPWM Switching Frequency
- Dedicated High-Speed Error Analog-to-Digital Converter (EADC) for Each Feedback Loop With Sense Resolution of up to 1 mV
- On-Chip 10-Bit D/A Converter (DAC) for Setting EADC Reference Voltage
- Dedicated Hardware Accelerated Digital Compensators or Control Law Accelerators (CLA)
  - Three-Pole/Three-Zero Configurable Compensator
  - Features Non-Linear Digital Control
  - Multiple Programmable Coefficient Registers for Adaptive Digital Compensation
- Up to 15-Channel, 12-Bit, 200-ksps, Analog-to-Digital Converter (ADC)
- Multiple Levels of Fault Protection
  - Four High-Speed Analog Comparators
  - External Fault Inputs
  - 12-Bit ADC
- Configurable for Voltage-Mode, Average-Current-Mode, and Resonant-Mode Control
- Allows Synchronization of DPWM Waveforms Between Multiple UCD3040, UCD3020 and UCD3028 (UCD30xx) Devices
- Adjustable DPWM Pulse Width Enables Support for Current Balancing in a Multiphase Application.
- High-Performance 31.25-MHz, 32-Bit ARM7 Processor
- 32-KByte Program Flash and 2-KByte Data Flash Memory With Error Correction Code (ECC)
- 4-KByte Data RAM
- 4-KByte Boot ROM
- Communication Peripherals
  - PMBus
  - UART
  - SPI
  - JTAG (Not Available in the UCD3028)
- Single-Supply Solution: Internal Regulator Controls External Pass Element
- Internal Temperature Sensor
- Up to Five Additional Timers
- Built-In Watchdog, BOD, and POR
- 80-Pin QFP, 64-Pin QFN, 48-Pin QFN, and 40-Pin QFN Package Offerings
- Operating Temperature Range: –40°C to 125°C

APPLICATIONS

- Isolated AC/DC and DC/DC Power Supplies
- Power-Factor Correction
- Non-Isolated DC/DC Power Supplies

Please be aware that an important notice concerning availability, standard warranty, and use in critical applications of Texas Instruments semiconductor products and disclaimers thereto appears at the end of this data sheet.

Fusion Digital Power, Code Composer Studio are trademarks of Texas Instruments.
All other trademarks are the property of their respective owners.

PRODUCTION DATA information is current as of publication date. Products conform to specifications per the terms of the Texas Instruments standard warranty. Production processing does not necessarily include testing of all parameters.

Copyright © 2009–2010, Texas Instruments Incorporated

This integrated circuit can be damaged by ESD. Texas Instruments recommends that all integrated circuits be handled with appropriate precautions. Failure to observe proper handling and installation procedures can cause damage.

ESD damage can range from subtle performance degradation to complete device failure. Precision integrated circuits may be more susceptible to damage because very small parametric changes could cause the device not to meet its published specifications.

DESCRIPTION

The UCD30xx devices are members of a family of digital PWM controllers from Texas Instruments providing a single-chip control solution for digital power-conversion applications. These devices allow digital control implementation of a high-performance, high-frequency power supply with flexible configuration of parameters, supervisory, monitoring, and communication functions.

The UCD30xx are fully programmable solutions that are configurable to support a wide range of isolated and non-isolated topologies in single- or multiphase configurations. Some examples include interleaved PFC, isolated forward, half-bridge, phase-shifted full bridge, active clamp, and resonant LLC.

At the core of the UCD30xx controllers are the digital control-loop peripherals, also known as Fusion Digital Power™ peripherals (FDPP). Each FDPP implements a high-speed digital control loop consisting of a dedicated error analog-to-digital converter (EADC), a three-pole/three-zero (3p/3z) digital compensator, and two DPWM outputs with 250-ps pulse-width resolution. The device also contains a 12-bit, 200-ksps general-purpose ADC with up to 15 channels, timers, interrupt controls, and communications ports such as PMBus, SCI, and SPI. The device is based on a 32-bit ARM7 RISC CPU that performs real-time monitoring, configures peripherals, and manages communications. The CPU executes its program out of programmable flash memory as well as ROM.

The UCD30xx is supported by Texas Instruments' Code Composer Studio™ software development environment.

ORDERING INFORMATION

PART NUMBER	PIN COUNT	PACKAGE	SUPPLY	TOP-SIDE MARKING	OPERATING TEMPERATURE RANGE, T_A
UCD3040PFC	80	QFP	Tray of 96	UCD3040	–40°C to 125°C
UCD3040PFCR	80	QFP	Reel of 1000	UCD3040	–40°C to 125°C
UCD3040RGCT	64	QFN	250 (small reel)	UCD3040	–40°C to 125°C
UCD3040RGCR	64	QFN	2000 (large reel)	UCD3040	–40°C to 125°C
UCD3020RGZT	48	QFN	250 (small reel)	UCD3020	–40°C to 125°C
UCD3020RGZR	48	QFN	2500 (large reel)	UCD3020	–40°C to 125°C
UCD3028RHAT	40	QFN	250 (small reel)	UCD3028	–40°C to 125°C
UCD3028RHAR	40	QFN	2500 (large reel)	UCD3028	–40°C to 125°C

Copyright © 2009–2010, Texas Instruments Incorporated

DELTA ELECTRONICS EX. 1018
Page 2

PRODUCT SELECTION MATRIX

FEATURE	UCD3040 80-Pin	UCD3040 64-Pin	UCD3020 48-Pin	UDC3028 40-Pin
ARM7 core processor	31.25 MHz	31.25 MHz	31.25 MHz	31.25 MHz
High-resolution DPWM outputs (250-ps resolution)	8	8	6	8
Number of high-speed independent feedback loops (number of regulated output voltages)	4	4	2	2
12-bit, 200-ksps, general-purpose ADC channels	15	11	9	9
Digital comparators at ADC outputs	6	6	6	6
Flash memory (program)	32 KB	32 KB	32 KB	32 KB
Flash memory (data)	2 KB	2 KB	2 KB	2 KB
Flash security	√	√	√	√
RAM	4 KB	4 KB	4 KB	4 KB
DPWM switching frequency	Up to 2 MHz	Up to 2 MHz	Up to 2 MHz	Up to 2 MHz
Programmable fault inputs	8	8	6	2
High-speed analog comparators	4	4	4	4
UART (SCI)	1	1	1	1 (1)
PMBus	√	√	√	√
Timers	4 (16-bit) and 1 (24-bit)	4 (16- bit) and 1 (24-bit)	4 (16-bit) and 1 (24-bit)	4 (16-bit) and 1 (24-bit)
Timer PWM outputs	4	4	2	2
Timer compare outputs	1	1 (2)	1 (2)	0
Timer capture inputs	2	2 (2)	2 (2)	0
Watchdog	√	√	√	√
On-chip oscillator	√	√	√	√
Power-on reset and brownout reset	√	√	√	√
JTAG	√	√	√	
Package offering	80-pin QFP (14 mm × 14 mm)	64-pin QFN (9 mm × 9 mm)	48-pin QFN (7 mm × 7 mm)	40-pin QFN (6 mm × 6 mm)
On-chip voltage-regulator control (external-pass element)	√	√	√	√
Sync IN and sync OUT functions	√	√ (2)	√ (2)	√ (1)
Total GPIO (includes all pins with multiplexed functions, such as DPWM, fault inputs, SCI, SPI, etc.)	33	26	21	20
External Vref for 12-bit ADC	√		√	
External interrupts	2	2 (2)	2 (2)	
SPI	1	1 (1)	1 (1)	

(1) Multiplexed pins with SYNC_IN, SYNC_OUT, and SCI
(2) Multiplexed pins with JTAG

Copyright © 2009–2010, Texas Instruments Incorporated

FUNCTIONAL BLOCK DIAGRAMS

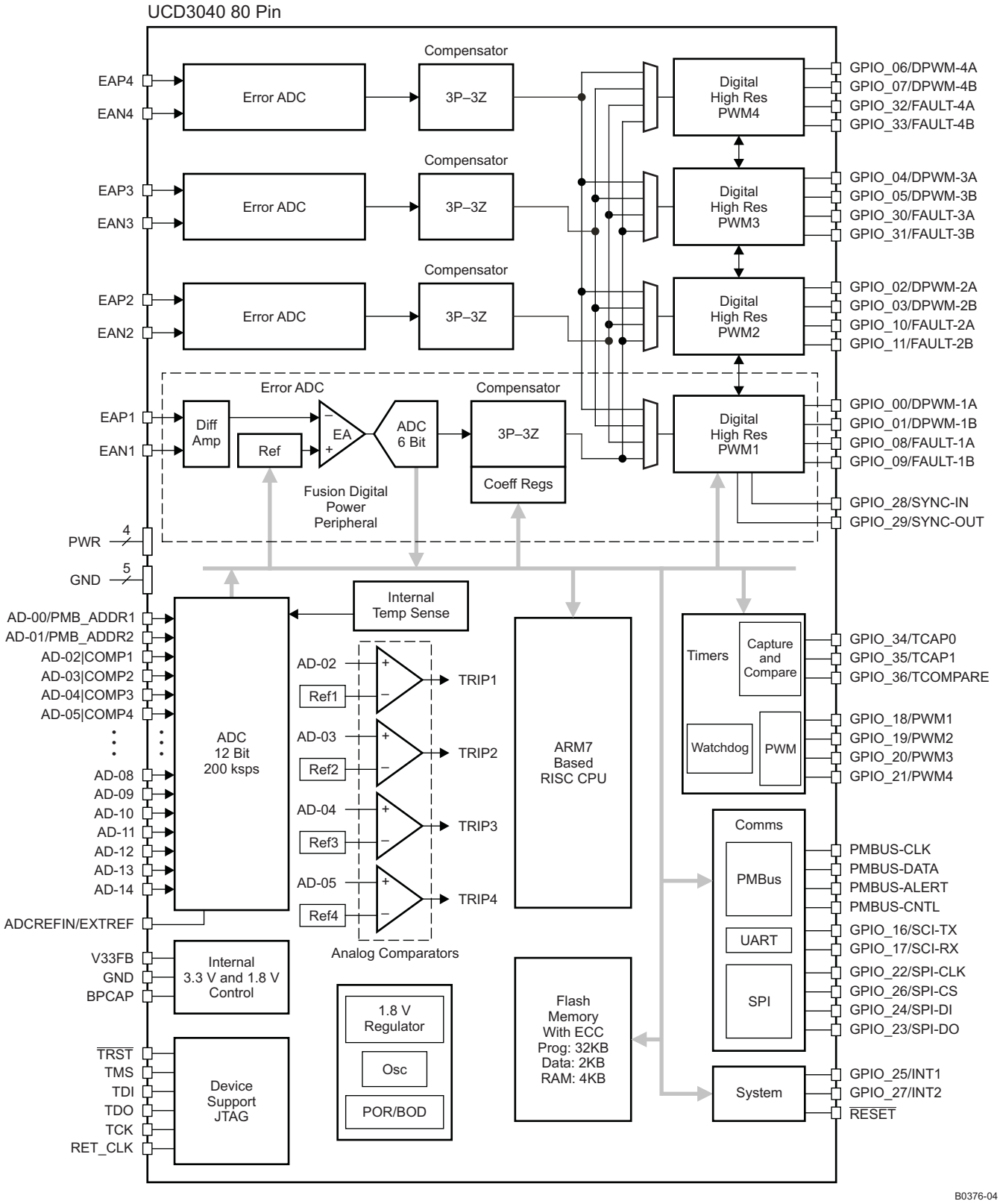

Copyright © 2009–2010, Texas Instruments Incorporated

DELTA ELECTRONICS EX. 1018
Page 4

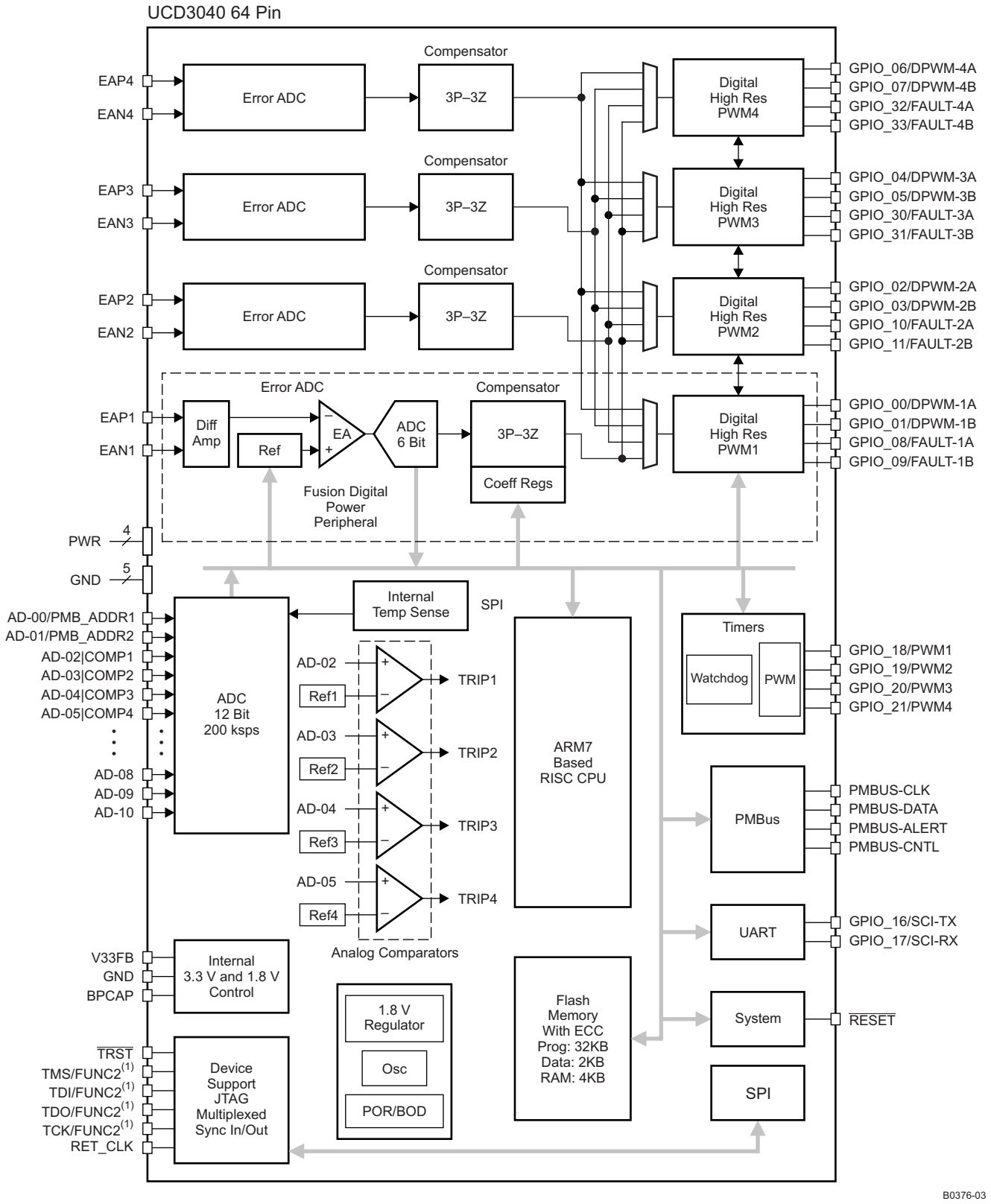

(1) FUNC2 for the four pins TMS, TDI, TDO, and TCK indicates secondary functions available on these pins. These are configurable by the IO_FUNC_MODE bits in the I/O Functional Multiplexer Control register (IOMUXCTRL).

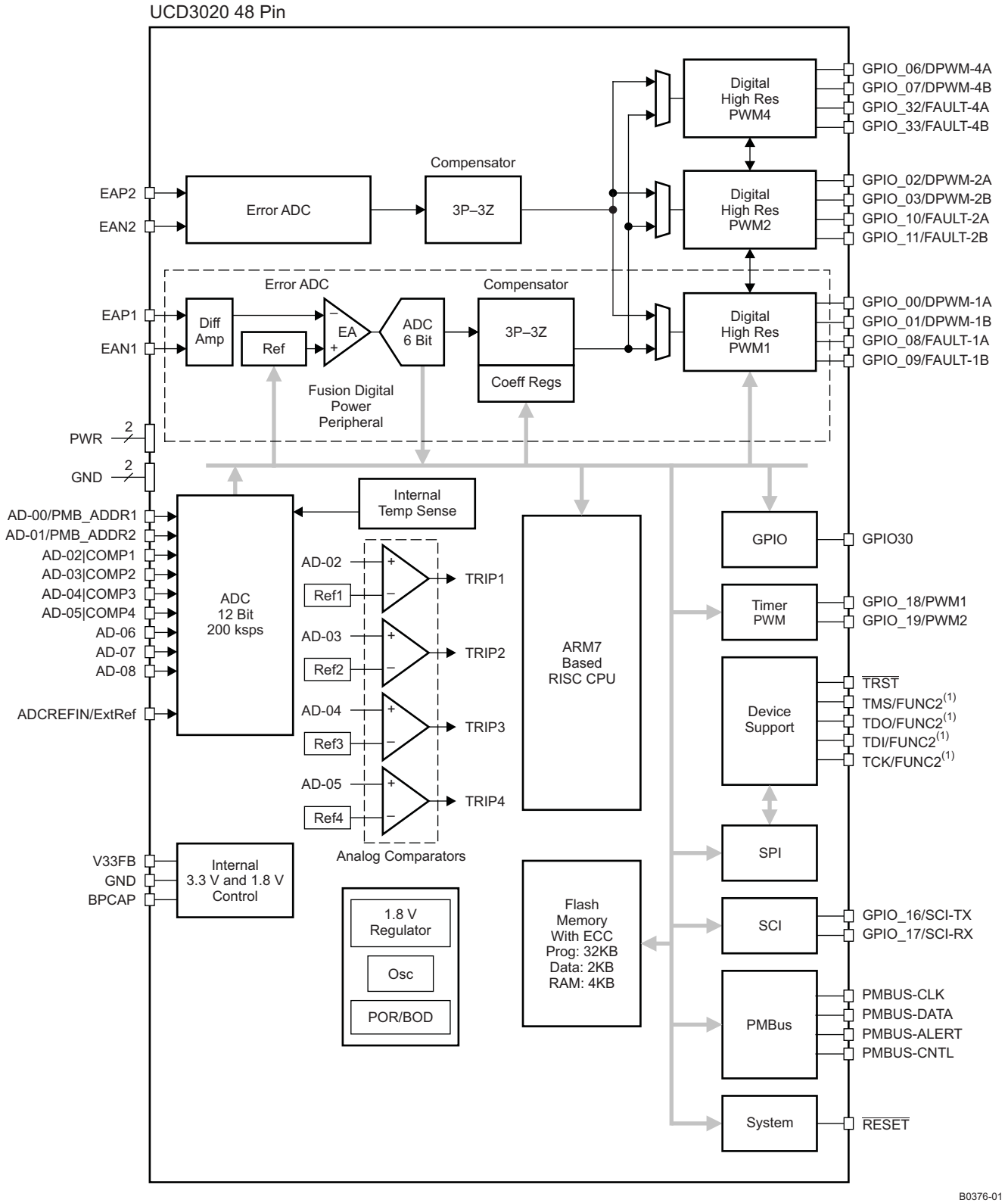

(1) FUNC2 for the four pins TMS, TDI, TDO, and TCK indicates secondary functions available on these pins. These are configurable the by IO_FUNC_MODE bits in the I/O Functional Multiplexer Control register (IOMUXCTRL).

Copyright © 2009–2010, Texas Instruments Incorporated

DELTA ELECTRONICS EX. 1018
Page 6

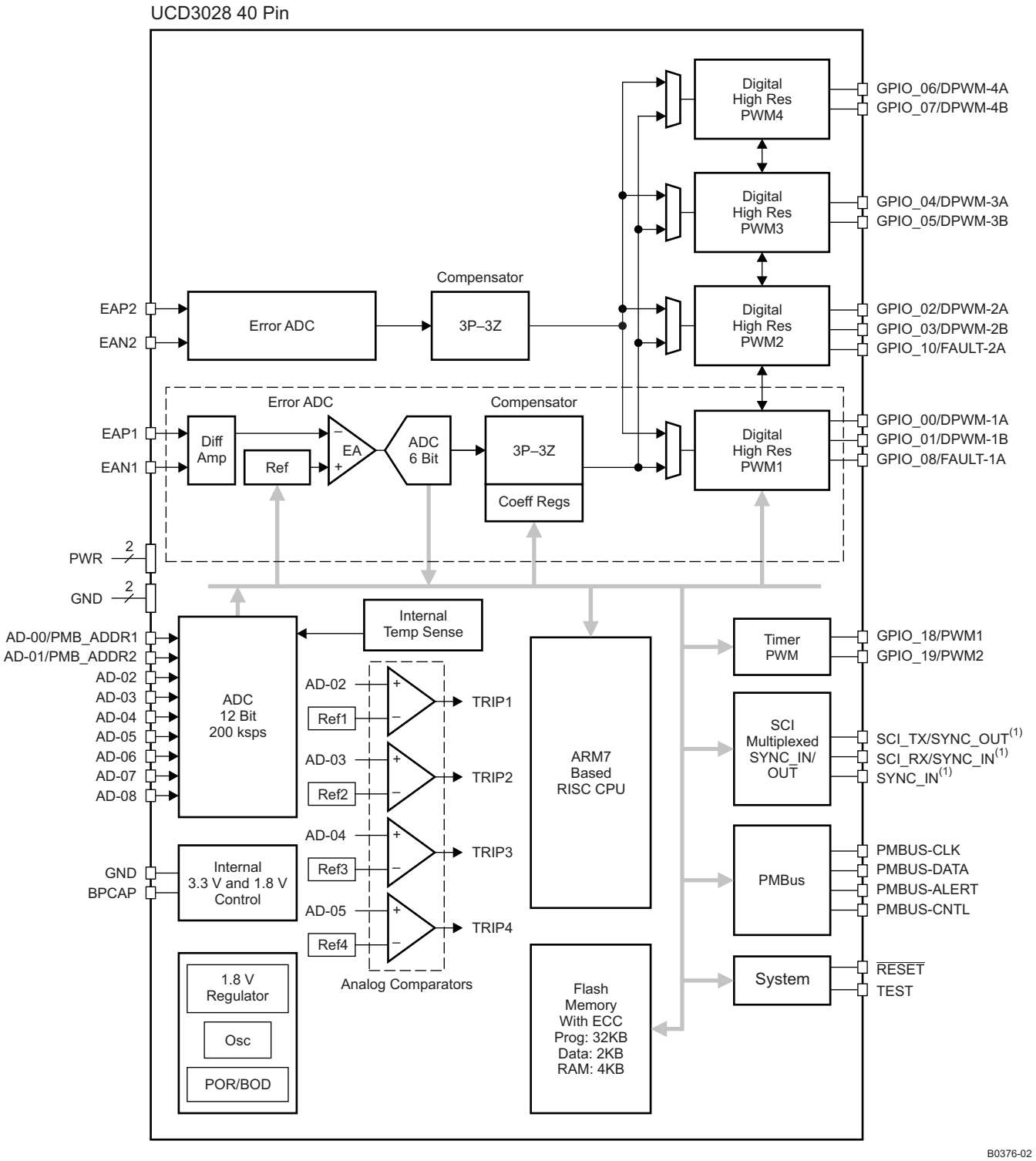

(1) Requires configuration of IO_FUNC_MODE bits in the I/O functional multiplexer control register (IOMUXCTRL)

UCD3040 Pin Assignments

PFC Package
(Top View)

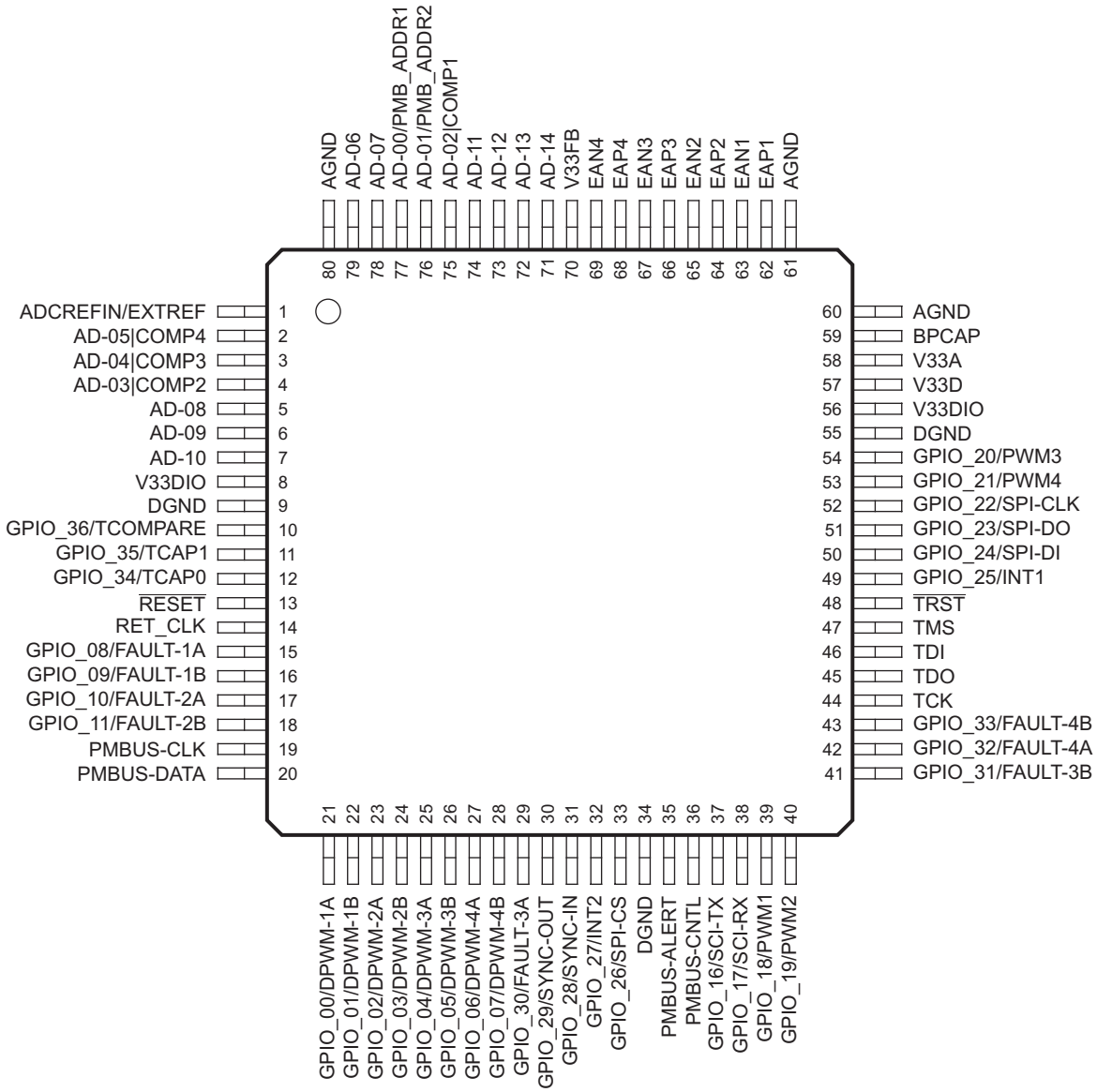

Copyright © 2009–2010, Texas Instruments Incorporated

DELTA ELECTRONICS EX. 1018
Page 8

RGC Package
(Top View)

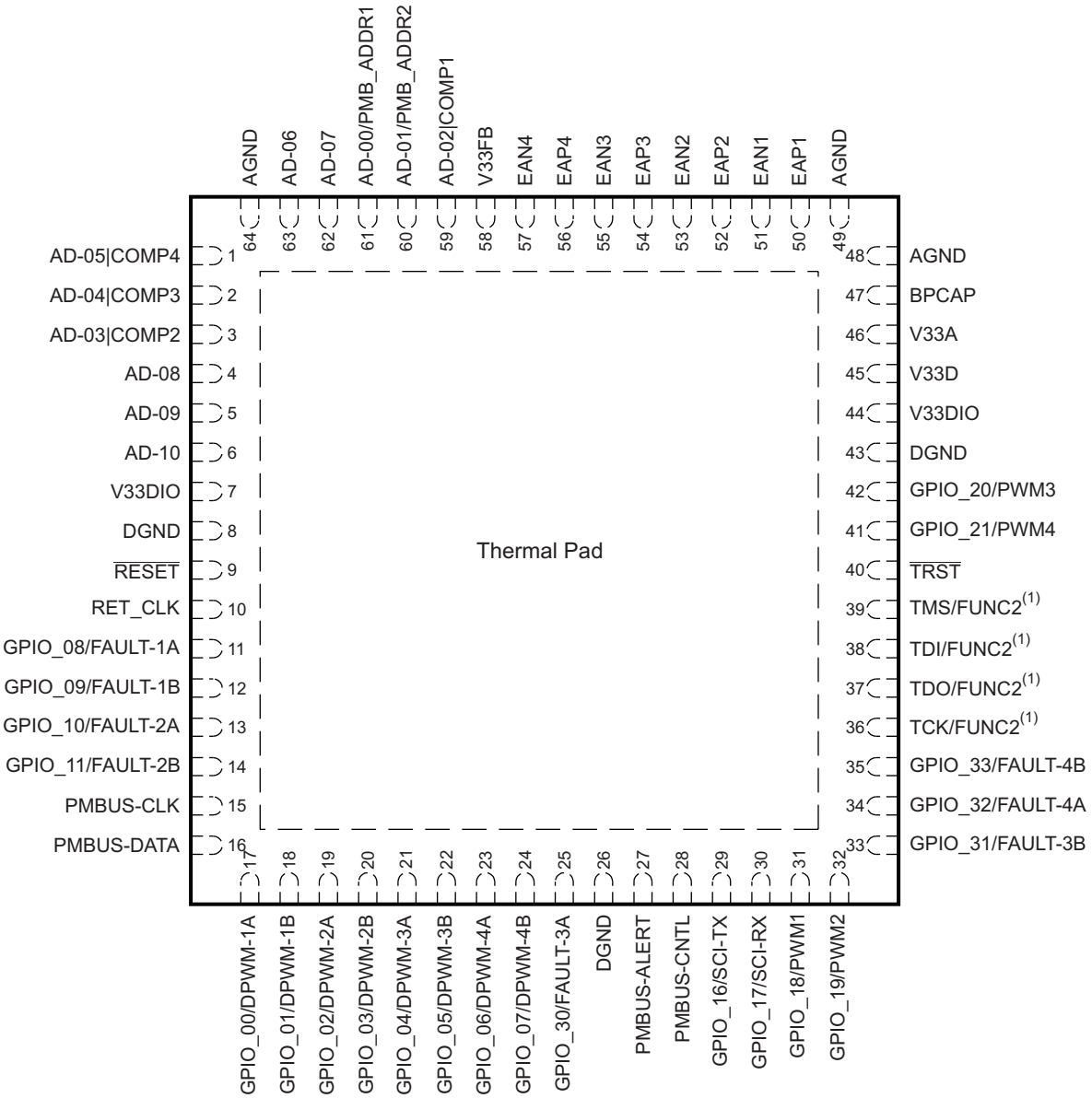

(1) FUNC2 for the four pins TMS, TDI, TDO, and TCK indicates secondary functions available on these pins. These are configurable by the IO_FUNC_MODE bits in the I/O Functional Multiplexer Control register (IOMUXCTRL).

The UCD3040 is available in a plastic 80-pin ***TQFP*** package and a 64-pin ***QFN*** package.

DELTA ELECTRONICS EX. 1018
Page 9

UCD3020 Pin Assignments

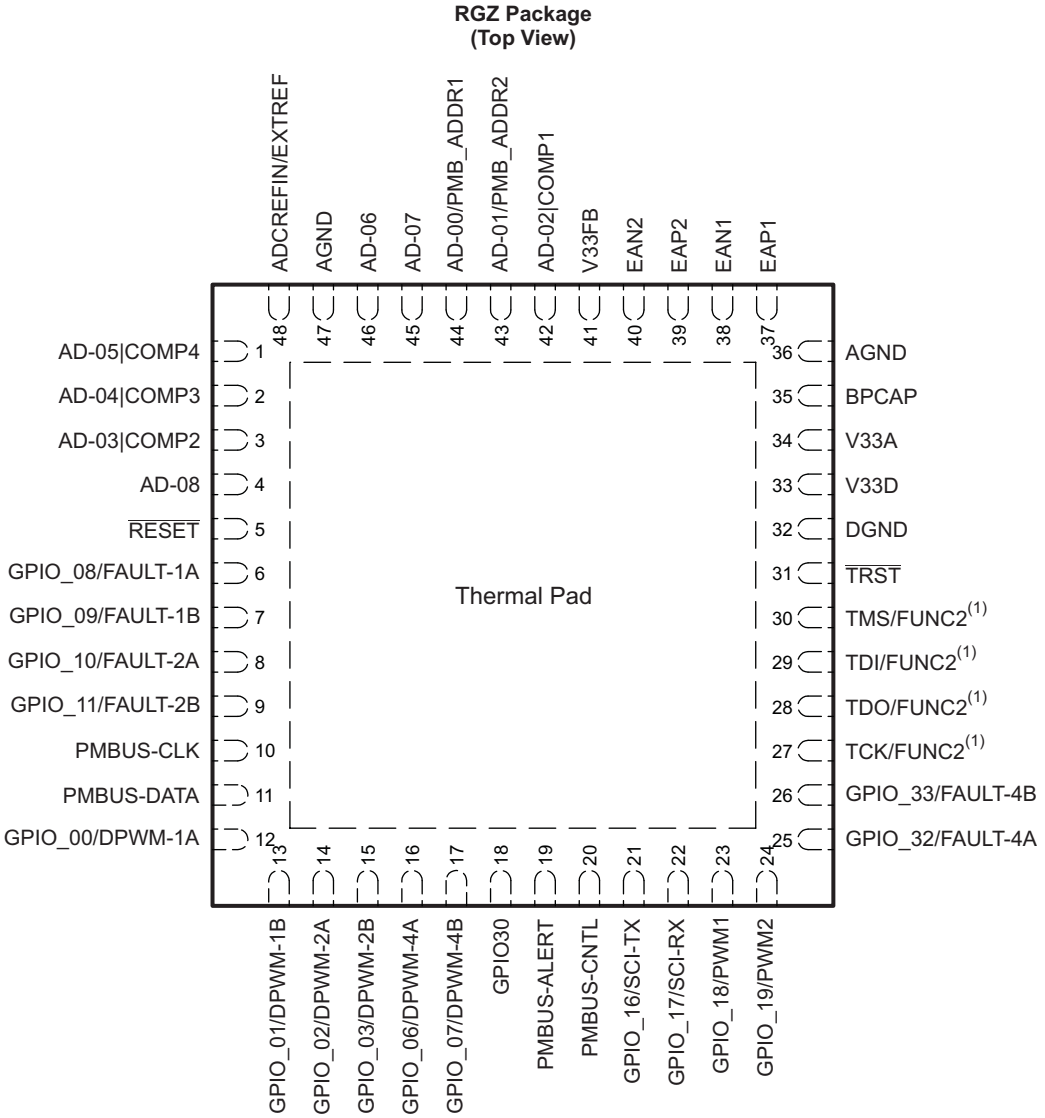

(1) FUNC2 for the four pins TMS, TDI, TDO, and TCK indicates secondary functions available on these pins. These are configurable by the IO_FUNC_MODE bits in the I/O Functional Multiplexer Control register (IOMUXCTRL).

The UCD3020 is available in a plastic 48-pin *QFN* package.

Copyright © 2009–2010, Texas Instruments Incorporated

DELTA ELECTRONICS EX. 1018
Page 10

UDC3028 Pin Assignments

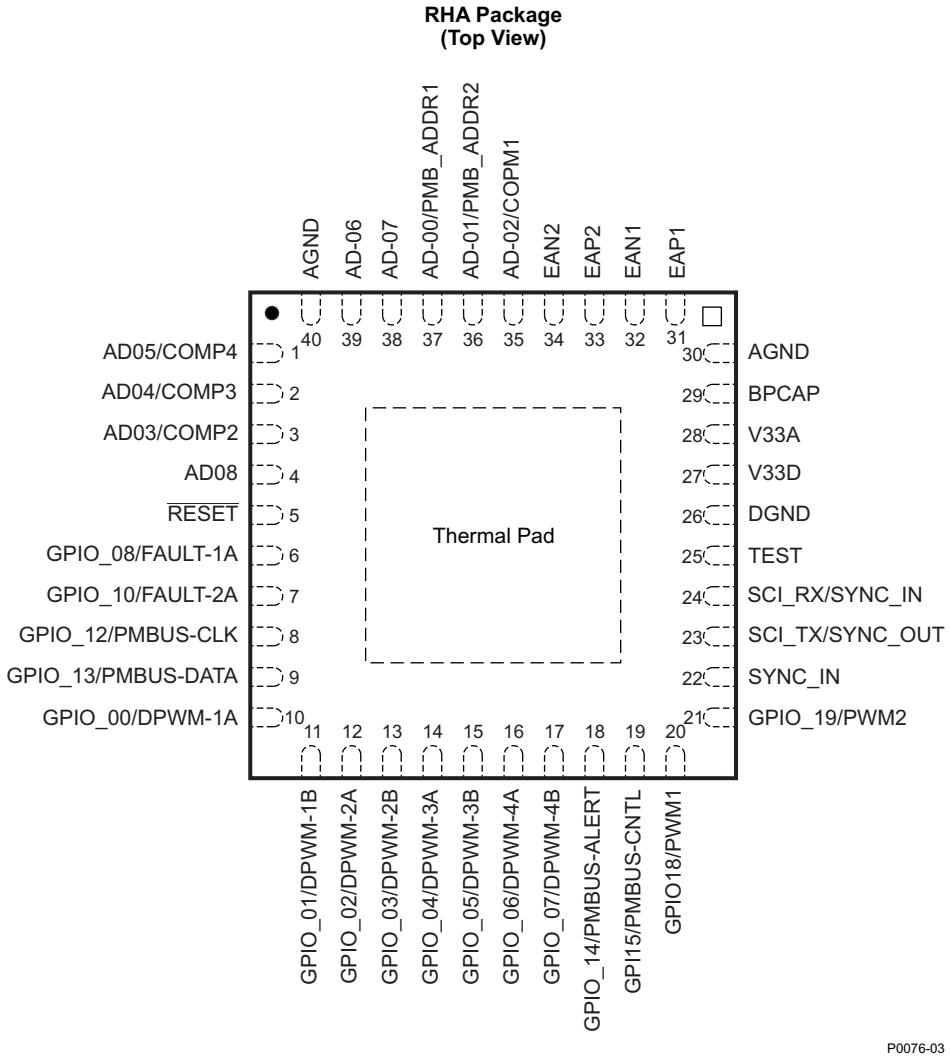

PIN DESCRIPTIONS

UCD3040 80-Pin PACKAGE		UCD3040 64-Pin PACKAGE		I/O	DESCRIPTION
Signal	NO.	Signal	NO.		
AD-00/PMB_ADDR1	77	AD-00/PMB_ADDR1	61	I	12-bit ADC, Ch0/PMBus address sense
AD-01/PMB_ADDR2	76	AD-01/PMB_ADDR2	60	I	12-bit ADC, Ch1/PMBus address sense
AD-02|COMP1	75	AD-02|COMP1	59	I	12-bit ADC, Ch2 and analog comparator #1
AD-03|COMP2	4	AD-03|COMP2	3	I	12-bit ADC, Ch3 and analog comparator #2
AD-04|COMP3	3	AD-04|COMP3	2	I	12-bit ADC, Ch4 and analog comparator #3
AD-05|COMP4	2	AD-05|COMP4	1	I	12-bit ADC, Ch5 and analog comparator #4
AD-06	79	AD-06	63	I	12-bit ADC, Ch6
AD-07	78	AD-07	62	I	12-bit ADC, Ch7
AD-08	5	AD-08	4	I	12-bit ADC, Ch8
AD-09	6	AD-09	5	I	12-bit ADC, Ch9
AD-10	7	AD-10	6	I	12-bit ADC, Ch10
AD-11	74	—	—	I	12-bit ADC, Ch11
AD-12	73	—	—	I	12-bit ADC, Ch12

Copyright © 2009–2010, Texas Instruments Incorporated

UCD3040 80-Pin PACKAGE		UCD3040 64-Pin PACKAGE		I/O	DESCRIPTION
Signal	NO.	Signal	NO.		
AD-13	72	—	—	I	12-bit ADC, Ch13
AD-14	71	—	—	I	12-bit ADC, Ch14
ADCREFIN/EXTREF	1	—	—	I	12-bit ADC, external reference
AGND	60	AGND	48	—	Analog ground
AGND	61	AGND	49	—	Analog ground
AGND	80	AGND	64	—	Analog ground
BPCAP	59	BPCAP	47	I	1.8-V bypass capacitor connect pin
DGND	9	DGND	8	—	Digital ground
DGND	34	DGND	26	—	Digital ground
DGND	55	DGND	43	—	Digital ground
EAN1	63	EAN1	51	I	Channel #1, differential analog voltage, negative input
EAN2	65	EAN2	53	I	Channel #2, differential analog voltage, negative input
EAN3	67	EAN3	55	I	Channel #3, differential analog voltage, negative input
EAN4	69	EAN4	57	I	Channel #4, differential analog voltage, negative input
EAP1	62	EAP1	50	I	Channel #1, differential analog voltage, positive input
EAP2	64	EAP2	52	I	Channel #2, differential analog voltage, positive input
EAP3	66	EAP3	54	I	Channel #3, differential analog voltage, positive input
EAP4	68	EAP4	56	I	Channel #4, differential analog voltage, positive input
GPIO_00/DPWM-1A	21	GPIO_00/DPWM-1A	17	I/O	GPIO port 0/DPWM 1A output
GPIO_01/DPWM-1B	22	GPIO_01/DPWM-1B	18	I/O	GPIO port 1/DPWM 1B output
GPIO_02/DPWM-2A	23	GPIO_02/DPWM-2A	19	I/O	GPIO port 2/DPWM 2A output
GPIO_03/DPWM-2B	24	GPIO_03/DPWM-2B	20	I/O	GPIO port 3/DPWM 2B output
GPIO_04/DPWM-3A	25	GPIO_04/DPWM-3A	21	I/O	GPIO port 4/DPWM 3A output
GPIO_05/DPWM-3B	26	GPIO_05/DPWM-3B	22	I/O	GPIO port 5/DPWM 3B output
GPIO_06/DPWM-4A	27	GPIO_06/DPWM-4A	23	I/O	GPIO port 6/DPWM 4A output
GPIO_07/DPWM-4B	28	GPIO_07/DPWM-4B	24	I/O	GPIO port 7/DPWM 4B output
GPIO_08/FAULT-1A	15	GPIO_08/FAULT-1A	11	I/O	GPIO port 8/external fault input 1A
GPIO_09/FAULT-1B	16	GPIO_09/FAULT-1B	12	I/O	GPIO port 9/external fault input 1B
GPIO_10/FAULT-2A	17	GPIO_10/FAULT-2A	13	I/O	GPIO port 10/external fault input 2A
GPIO_11/FAULT-2B	18	GPIO_11/FAULT-2B	14	I/O	GPIO port 11/external fault input 2B
GPIO_16/SCI-TX	37	GPIO_16/SCI-TX	29	I/O	GPIO port 16/SCI transmit
GPIO_17/SCI-RX	38	GPIO_17/SCI-RX	30	I/O	GPIO port 17/SCI receive
GPIO_19/PWM2	40	GPIO_19/PWM2	32	I/O	GPIO port 19/PWM output 2 (16-bit timer)
GPIO_18/PWM1	39	GPIO_18/PWM1	31	I/O	GPIO port 18/PWM output 1 (16-bit timer)
GPIO_20/PWM3	54	GPIO_20/PWM3	42	I/O	GPIO port 20/PWM output 3 (16-bit timer)
GPIO_21/PWM4	53	GPIO_21/PWM4	41	I/O	GPIO port 21/PWM output 4 (16-bit timer)
GPIO_22/SPI-CLK	52	—	—	I/O	GPIO port 22/SPI clock
GPIO_23/SPI-DO	51	—	—	I/O	GPIO port 23/SPI data out
GPIO_24/SPI-DI	50	—	—	I/O	GPIO port 24/SPI data in
GPIO_25/INT1	49	—	—	I/O	GPIO port 25/interrupt 1
GPIO_26/SPI-CS	33	—	—	I/O	GPIO port 26/SPI chip select
GPIO_27/INT2	32	—	—	I/O	GPIO port 27/interrupt 2
GPIO-28/SYNC-IN	31	—	—	I/O	GPIO port 28/sync input to DPWM
GPIO-29/SYNC-OUT	30	—	—	I/O	GPIO port 29/sync output from DPWM
GPIO_30/FAULT-3A	29	GPIO_30/FAULT-3A	25	I/O	GPIO port 30/external fault input 3A
GPIO_31/FAULT-3B	41	GPIO_31/FAULT-3B	33	I/O	GPIO port 31/external fault input 3B
GPIO_32FAULT-4A	42	GPIO_32FAULT-4A	34	I/O	GPIO port 32/external fault input 4A

Copyright © 2009–2010, Texas Instruments Incorporated

DELTA ELECTRONICS EX. 1018
Page 12

UCD3040 80-Pin PACKAGE		UCD3040 64-Pin PACKAGE		I/O	DESCRIPTION
Signal	NO.	Signal	NO.		
GPIO_33/FAULT-4B	43	GPIO_33/FAULT-4B	35	I/O	GPIO port 33/external fault input 4B
GPIO_34/TCAP0	12	—	—	I/O	GPIO port 34/timer capture input 0
GPIO_35/TCAP1	11	—	—	I/O	GPIO port 35/timer capture input 1
GPIO_36/TCOMPARE	10	—	—	I/O	GPIO port 36/timer compare output
PMBUS-ALERT	35	PMBUS-ALERT	27	O	PMBus alert (must have pullup to 3.3 V), general-purpose output, open-drain
PMBUS-CLK	19	PMBUS-CLK	15	I/O	PMBus clock (must have pullup to 3.3 V)
PMBUS-CNTL	36	PMBUS-CNTL	28	I	PMBus control, general-purpose input
PMBUS-DATA	20	PMBUS-DATA	16	I/O	PMBus data (must have pullup to 3.3 V)
$\overline{\text{RESET}}$	13	$\overline{\text{RESET}}$	9	I	Active-low device-reset input
RET_CLK	14	RET_CLK	10	O	Return clock
TCK	44	TCK/FUNC2	36	I/O	For 64-pin JTAG TCK or other secondary functions selectable by IO_FUNC_MODE bits in I/O functional multiplexer control register. For 80-pin JTAG TCK
TDI	46	TDI/FUNC2	38	I/O	For 64-pin JTAG TDI or other secondary functions selectable by IO_FUNC_MODE bits in I/O functional multiplexer control register. For 80-pin JTAG TDI
TDO	45	TDO/FUNC2	37	I/O	For 64-pin JTAG TDO or other secondary functions selectable by IO_FUNC_MODE bits in I/O functional multiplexer control register. For 80-pin JTAG TDO
TMS	47	TMS/FUNC2	39	I/O	For 64-pin JTAG TMS or other secondary functions selectable by IO_FUNC_MODE bits in I/O functional multiplexer control register. For 80-pin JTAG TMS
$\overline{\text{TRST}}$	48	$\overline{\text{TRST}}$	40	I/O	JTAG $\overline{\text{TRST}}$ for both 80-pin and 64-pin devices
V33A	58	V33A	46	—	Analog 3.3-V supply
V33D	57	V33D	45	—	Digital core 3.3-V supply
V33DIO	8	V33DIO	7	—	Digital I/O 3.3-V supply
V33DIO	56	V33DIO	44	—	Digital I/O 3.3-V supply
V33FB	70	V33FB	58	—	3.3-V linear-regulator feedback input

UCD3020 48-Pin PACKAGE		I/O	DESCRIPTION
Signal	NO.		
AD-00/PMB_ADDR1	44	I	12-bit ADC, Ch0/PMBus address sense, least-significant address bits
AD-01/PMB_ADDR2	43	I	12-bit ADC, Ch1/PMBus address sense, most-significant address bits
AD-02|COMP1	42	I	12-bit ADC, Ch2 and analog comparator #1
AD-03|COMP2	3	I	12-bit ADC, Ch3 and analog comparator #2
AD-04|COMP3	2	I	12-bit ADC, Ch4 and analog comparator #3
AD-05|COMP4	1	I	12-bit ADC, Ch5 and analog comparator #4
AD-06	46	I	12-bit ADC, Ch6
AD-07	45	I	12-bit ADC, Ch7
AD-08	4	I	12-bit ADC, Ch8
ADCREFIN/EXTREF	48	I	12-bit ADC, external reference
AGND	36	—	Analog ground
AGND	47	—	Analog ground
BPCAP	35	I	1.8-V bypass-capacitor connect pin
DGND	32	—	Digital ground
EAN1	38	I	Channel #1, differential analog voltage, negative input

Copyright © 2009–2010, Texas Instruments Incorporated

DELTA ELECTRONICS EX. 1018
Page 13

UCD3020 48-Pin PACKAGE		I/O	DESCRIPTION
Signal	NO.		
EAN2	40	I	Channel #2, differential analog voltage, negative input
EAP1	37	I	Channel #1, differential analog voltage, positive input
EAP2	39	I	Channel #2, differential analog voltage, positive input
GPIO_00/DPWM-1A	12	I/O	GPIO port 0/DPWM 1A output
GPIO_01/DPWM-1B	13	I/O	GPIO port 1/DPWM 1B output
GPIO_02/DPWM-2A	14	I/O	GPIO port 2/DPWM 2A output
GPIO_03/DPWM-2B	15	I/O	GPIO port 3/DPWM 2B output
GPIO_06/DPWM-4A	16	I/O	GPIO port 6/DPWM 4A output
GPIO_07/DPWM-4B	17	I/O	GPIO port 7/DPWM 4B output
GPIO_08/FAULT-1A	6	I/O	GPIO port 8/external fault input 1A
GPIO_09/FAULT-1B	7	I/O	GPIO port 9/external fault input 1B
GPIO_10/FAULT-2A	8	I/O	GPIO port 10/external fault input 2A
GPIO_11/FAULT-2B	9	I/O	GPIO port 11/external fault input 2B
GPIO_16/SCI-TX	21	I/O	GPIO port 16/SCI transmit
GPIO_17/SCI-RX	22	I/O	GPIO port 17/SCI receive
GPIO_18/PWM1	23	I/O	GPIO port 18/PWM output 1 (16-bit timer)
GPIO_19/PWM2	24	I/O	GPIO port 19/PWM output 2 (16-bit timer)
GPIO_30	18	I/O	GPIO port 30
GPIO_32/FAULT-4A	25	I/O	GPIO port 32/external fault input 4A
GPIO_33/FAULT-4B	26	I/O	GPIO port 33/external fault input 4B
PMBUS-ALERT	19	O	PMBUS alert (must have pullup to 3.3 V), general-purpose output, open-drain
PMBUS-CLK	10	I/O	PMBus clock (must have pullup to 3.3 V)
PMBUS-CNTL	20	I	PMBUS control, general-purpose input
PMBUS-DATA	11	I/O	PMBus data (must have pullup to 3.3 V)
$\overline{\text{RESET}}$	5	I	Active-low device-reset input
TCK/FUNC2	27	I/O	JTAG TCK or secondary functions selectable by IO_FUNC_MODE bits in I/O functional multiplexer control register
TDI/FUNC2	29	I/O	JTAG TDI or secondary functions selectable by IO_FUNC_MODE bits in I/O functional multiplexer control register
TDO/FUNC2	28	I/O	JTAG TDO or secondary functions selectable by IO_FUNC_MODE bits in I/O functional multiplexer control register
TMS/FUNC2	30	I/O	JTAG TMS or secondary functions selectable by IO_FUNC_MODE bits in I/O functional multiplexer control register
$\overline{\text{TRST}}$	31	I	JTAG reset
V33A	34	—	Analog 3.3-V supply
V33D	33	—	Digital core 3.3-V supply
V33FB	41	—	3.3-V linear-regulator feedback input

UCD3028 40-Pin Package		I/O	DESCRIPTION
Signal	NO.		
AD-00/PMB_ADDR1	37	I	ADC12, Ch0/PMBus address sense, most-significant address bits
AD-01/PMB_ADDR2	36	I	ADC12, Ch1/PMBus address sense, least-significant address bits
AD-02/COMP1	35	I	ADC12, Ch2/analog comparator #1
AD-03/COMP2	3	I	ADC12, Ch3/analog comparator #2
AD-04/COMP3	2	I	ADC12, Ch4/analog comparator #3
AD-05/COMP4	1	I	ADC12, Ch5/analog comparator #4
AD-06	39	I	ADC12, Ch6

Copyright © 2009–2010, Texas Instruments Incorporated

DELTA ELECTRONICS EX. 1018
Page 14

UCD3028 40-Pin Package		I/O	DESCRIPTION
Signal	NO.		
AD-07	38	I	ADC12, Ch7
AD-08	4	I	ADC12, Ch8
AGND	30	–	Analog ground
AGND	40	–	Analog ground
BPCAP	29	O	1.8-V bypass capacitor connect pin
DGND	26	–	Digital ground
EAN1	32	I	Channel #1, differential analog error voltage, negative input
EAN2	34	I	Channel #2, differential analog error voltage, negative input
EAP1	31	I	Channel #1, differential analog error voltage, positive input
EAP2	33	I	Channel #2, differential analog error voltage, positive input
GPIO_00/DPWM-1A	10	I/O	GPIO port 0/DPWM 1A output
GPIO_01/DPWM-1B	11	I/O	GPIO port 1/DPWM 1B output
GPIO_02/DPWM-2A	12	I/O	GPIO port 2/DPWM 2A output
GPIO_03/DPWM-2B	13	I/O	GPIO port 3/DPWM 2B output
GPIO_04/DPWM-3A	14	I/O	GPIO port 4/DPWM 3A output
GPIO_05/DPWM-3B	15	I/O	GPIO port 5/DPWM 3B output
GPIO_06/DPWM-4A	16	I/O	GPIO port 6/DPWM 4A output
GPIO_07/DPWM-4B	17	I/O	GPIO port 7/DPWM 4B output
GPIO_08/FAULT-1A	6	I/O	GPIO port 8/external fault input 1A
GPIO_10/FAULT-2A	7	I	GPIO port 10/external fault input 2A
GPIO_12/PMBUS-CLK	8	I/O	GPIO port 12/PMBus clock (must have pullup to 3.3 V)
GPIO_13/PMBUS-DATA	9	I/O	GPIO port 13/PMBus data (Must have pullup to 3.3 V)
GPIO_14/PMBUS-ALERT	18	O	GPO port 14/PMBUS alert
GPIO_15/PMBUS-CNTL	19	I	GPI port 15/PMBUS control
GPIO_18/PWM1	20	I/O	GPIO port 18/ PWM output 1 (16-bit timer)
GPIO_19/PWM2	21	I/O	GPIO port 19/ PWM output 2 (16-bit timer)
TEST	25	I	Manufacturer test. Tie to ground.
SCI_RX/SYNC_IN	24	I/O	GPIO port 39/SCI receive/sync input to DPWM
SCI_TX/SYNC_OUT	23	I/O	GPIO port 40/SCI transmit/sync output from DPWM
SYNC_IN	22	I/O	GPIO port 41/sync input to DPWM
$\overline{\text{RESET}}$	5	I	Active-low device-reset input
V33A	28	I	Analog 3.3-V supply
V33D	27	I	Digital core 3.3-V supply
Thermal pad	–	–	It is recommended that this pad be connected to analog ground.

Copyright © 2009–2010, Texas Instruments Incorporated

DELTA ELECTRONICS EX. 1018
Page 15

PIN MULTIPLEXING

The 64/48 pin devices incorporate an alternate function multiplexer that allows for all of the pins associated with the JTAG port to be used as an SPI port, UART port, or sync/IO port. Therefore, some of the function pins are lost when packaging the lower-pin-count devices. At power up, the default pins are set for JTAG TMS, TDI, TDO, and TCK functions. To switch to the alternate functions requires writing to the IO_FUNC_MODE bits in the *I/O Functional Multiplexer Control Register* (IOMUXCTRL). The following table lists six alternative functions for the JTAG pins, selectable by setting the IO_FUNC_MODE bits.

PIN NAME	PIN # (64/48)	Alt. Func1	Alt. Func2	Alt. Func3	Alt. Func4	Alt. Func5	Alt. Func6
TMS	39/30	SPI-CS/GPIO-38	SYNC-OUT	FAULT-2B	INT1	INT1	INT1
TDI	38/29	SPI-DI/GPIO-39	SCI-RX	FAULT-1B	SCI-RX	SYNC-IN	TCAP0
TDO	37/28	SPI-DO/GPIO-40	SCI-TX	SYNC-OUT	SCI-TX	SYNC-OUT	TCOMPARE
TCK	36/27	SPI-CLK/GPIO-41	SYNC-IN	SYNC-IN	INT2	INT2	TCAP1

For the 40-pin device, the following table shows six alternative functions selectable by setting the IO_FUNC_MODE bits.

PIN # (40)	Alt. Func1	Alt. Func2	Alt. Func3	Alt. Func4	Alt. Func5	Alt. Func6
24	SPI-DI/GPIO-39	SCI-RX	FAULT-1B	SCI-RX	SYNC-IN	TCAP0
23	SPI-DO/GPIO-40	SCI-TX	SYNC-OUT	SCI-TX	SYNC-OUT	TCOMPARE
22	SPI-CLK/GPIO-41	SYNC-IN	SYNC-IN	INT2	INT2	TCAP1

ABSOLUTE MAXIMUM RATINGS(1)

over operating free-air temperature range (unless otherwise noted)

		VALUE	UNIT
	Voltage applied at V33D to DVss	–0.3 to 3.6	V
	Voltage applied at V33A to AVss	–0.3 to 3.6	V
	Voltage applied to any pin(2)	–0.3 to 3.6	V
T_{stg}	Storage temperature	–55 to 150	°C

(1) Stresses beyond those listed under *Absolute Maximum Ratings* may cause permanent damage to the device. These are stress ratings only, and functional operation of the device at these or any other conditions beyond those indicated under *Recommended Operating Conditions* is not implied. Exposure to absolute-maximum-rated conditions for extended periods may affect device reliability.
(2) All voltages referenced to VSS.

RECOMMENDED OPERATING CONDITIONS

		MIN	NOM	MAX	UNIT
V33D, V33DIO, V33A	Supply voltage during operation	3	3.3	3.6	V
T_A	Operating free-air temperature range	–40		125	°C

Copyright © 2009–2010, Texas Instruments Incorporated

DELTA ELECTRONICS EX. 1018
Page 16

ELECTRICAL CHARACTERISTICS

over operating free-air temperature range (unless otherwise noted)

PARAMETER		TEST CONDITIONS	MIN	TYP	MAX	UNIT
SUPPLY CURRENT						
I33A	Supply current	V33A = 3.3 V		8	15	mA
I33DIO		V33DIO = 3.3 V		2	10	
I33D		V33D = 3.3 V		40	45	
		V33D = 3.3 V, storing configuration parameters in flash memory		50	55	
I33	Total supply current	V33D = 3.3 V, storing configuration parameters in flash memory		60	80	mA
INTERNAL REGULATOR CONTROLLER INPUTS/OUTPUTS						
V33	3.3-V linear regulator	Emitter of NPN transistor	3.25	3.3	3.35	V
V33FB	3.3-V linear regulator feedback			4	4.6	V
I33FB	Series-pass base drive	Vin = 12 V		10		mA
Beta	Series-NPN-pass device		40			
ERROR ADC INPUTS EAPn, EANn						
V_{CM}	Common-mode voltage, each pin		–0.15		1.6	V
V_{ERROR}	Internal error voltage range	AFE_GAIN field of CLA_GAINS = 0	–256		256	mV
EAP-EAN	Error voltage digital resolution	AFE_GAIN field of CLA_GAINS = 3		1		mV
R_{EA}	Input impedance	Ground reference	0.5			MΩ
I_{OFFSET}	Input offset current	1-kΩ source impedance	–5		5	µA
V_{Res_DAC}	EADC reference DAC resolution			1.56		mV
ANALOG INPUTS						
I_{BIAS}	Bias current for PMBus addr. pins		9		11	µA
V_{ADC_RANGE}	Measurement range for voltage monitoring		0		2.5	V
$V_{ADC_REF_INT}$	Internal ADC reference voltage	–40°C to 125°C	2.462	2.498	2.523	V
ΔADC_Ref	Internal ADC reference ΔV to 25°C reference voltage(1)	25°C to –40°C			5	mV
		25°C to 85°C	–10			
		25°C to 125°C	–20			
ΔADC_Ref_CMP	Internal analog comparator reference accuracy	0°C to 125°C		0.6% (± 6 mV)		
	EADC DAC reference voltage accuracy			0.5% (± 4mV)		
V_{CMP_THRS}	Analog comparator threshold voltage range		0.032		2	V
V_{CMP_RES}	Analog comparator threshold resolution			31.25		mV
ADCRef	External reference input(2)	(80 and 48-pin package)	1.8		V33A	V
$Temp_{Internal}$	Internal temperature-sense accuracy(1)	Over range from 0°C to 100°C	–5		5	°C
INL	ADC integral nonlinearity		–4		4	LSB
DNL	ADC differential nonlinearity		–2		2	LSB
$I_{Leakage}$	Input leakage current	3 V applied to pin			400	nA
R_{IN}	Input impedance	Ground reference	8			MΩ
C_{IN}	Input capacitance				10	pF
t_{ADC}	ADC single sample time			4.625		µs

(1) Characterized by design and not production tested.
(2) For the applied external reference input (ADCRef), the actual internal reference voltage (Vref_internal) seen by the 12-bit ADC module should be computed using the equation: ADCRef = Vref_internal × 1.05185

Copyright © 2009–2010, Texas Instruments Incorporated

ELECTRICAL CHARACTERISTICS (continued)

over operating free-air temperature range (unless otherwise noted)

PARAMETER		TEST CONDITIONS	MIN	TYP	MAX	UNIT
DIGITAL INPUTS/OUTPUTS (3)						
V_{OL}	Low-level output voltage	I_{OH} = 6 mA (4), V33DIO = 3 V			DGND+0.25	V
V_{OH}	High-level output voltage	I_{OH} = –6 mA (5), V33DIO = 3 V	V33DIO–0.6			V
V_{IH}	High-level input voltage	V33DIO = 3 V	2.1			V
V_{IL}	Low-level input voltage	V33DIO = 3.5 V			1.1	V
FAULT DETECTION LATENCY						
$t_{(FAULT)}$	Time to disable PWM output based on active FAULT pin signal	High level on FAULT pin		70		ns
$t_{(CLF)}$	Time to disable the DPWM output based on internal analog comparator	Step change in analog comparator input voltage from 0 V to 2 V	52			ns
SYSTEM PERFORMANCE						
t_{Delay}	Digital compensator delay (6)		208			ns
V_{RESET_HI}	Voltage at $\overline{RESET}$ pin at which device comes out of reset	For device reset		1.95	2.4	V
V_{RESET_LO}	Voltage at $\overline{RESET}$ pin at which device goes into reset	For device reset		1.4		V
V_{DD}Slew	Minimum VDD slew rate	VDD slew rate between 2.3 V and 2.9 V	0.25			V/ms
$t_{(reset)}$	Pulse width needed at reset		2			µs
$t_{retention}$	Retention period of flash content (data and program)	T_J = 25°C	100			years
Write_Cycles	Number of nonvolatile erase/write cycles (data flash)	T_J = 25°C	20			k cycles
$f_{(PCLK)}$	Internal oscillator frequency (7)	T_A = 125°C, T_A = 25°C		250		MHz
	Sync-in/sync-out pulse width	T_A = 25°C		16		ns

(3) DPWM outputs are low after reset. Other GPIO pins are configured as inputs after reset.
(4) The maximum total current, I_{OH}max and I_{OL}max for all outputs combined, should not exceed 12 mA to hold the maximum voltage drop specified. Maximum sink current per pin = –4 mA at V_{OL}; maximum source current per pin = 4 mA at V_{OH}.
(5) The maximum total current, I_{OH}max and I_{OL}max for all outputs combined, should not exceed 48 mA to hold the maximum voltage drop specified. Maximum sink current per pin = –4 mA at V_{OL}; maximum source current per pin = 4 mA at V_{OH}.
(6) Time from close of error ADC sample window to time when digitally calculated control effort (duty cycle) is available. This delay must be accounted for when calculating the system dynamic response.
(7) For improved accuracy on the internal oscillator frequency, Texas Instruments provides application notes with detailed temperature-compensation schemes. Contact TI or your local TI representative.

Copyright © 2009–2010, Texas Instruments Incorporated

DELTA ELECTRONICS EX. 1018
Page 18

PMBUS TIMING

PMBus/SMBus/I²C

The timing characteristics and timing diagram for the communications interface that supports I²C, SMBus, and PMBus are shown in Table 1, Figure 1, and Figure 2. The numbers in Table 1 are for 400-kHz operating frequency. However, the device supports all three speeds, standard (100 kHz), fast (400 kHz), and fast mode plus (1 MHz)..

Table 1. I²C/SMBus/PMBus Timing Characteristics

PARAMETER		TEST CONDITIONS	MIN	TYP	MAX	UNIT
Typical values at T_A = 25°C and V_{CC} = 3.3 V (unless otherwise noted)						
fSMB	SMBus/PMBus operating frequency	Slave mode, SMBC 50% duty cycle	10		400	kHz
fI2C	I²C operating frequency	Slave mode, SCL 50% duty cycle	10		400	kHz
$t_{(BUF)}$	Bus free time between start and stop		1.3			µs
$t_{(HD:STA)}$	Hold time after (repeated) start		0.6			µs
$t_{(SU:STA)}$	Repeated start setup time		0.6			µs
$t_{(SU:STO)}$	Stop setup time		0.6			µs
$t_{(HD:DAT)}$	Data hold time	Receive mode	0			ns
$t_{(SU:DAT)}$	Data setup time		100			ns
$t_{(TIMEOUT)}$	Error signal/detect	See (1)			35	µs
$t_{(LOW)}$	Clock low period		1.3			µs
$t_{(HIGH)}$	Clock high period	See (2)	0.6			µs
$t_{(LOW:SEXT)}$	Cumulative clock low slave extend time	See (3)			25	µs
t_f	Clock/data fall time	Rise time t_r = (V_{IL}max – 0.15) to (V_{IH}min + 0.15)	20 + 0.1 Cb(4)		300	ns
t_r	Clock/data rise time	Fall time t_f = 0.9 VDD to (V_{IL}max – 0.15)	20 + 0.1 Cb(4)		300	ns
Cb	Total capacitance of one bus line				400	pF

(1) The device times out when any clock low exceeds $t_{(TIMEOUT)}$.
(2) $t_{(HIGH)}$, Max, is the minimum bus idle time. SMBC = SMBD = 1 for t > 50 ms causes reset of any transaction that is in progress. This specification is valid when the NC_SMB control bit remains in the default cleared state (CLK[0] = 0).
(3) $t_{(LOW:SEXT)}$ is the cumulative time a slave device is allowed to extend the clock cycles in one message from initial start to the stop.
(4) Cb in picofarads (pF)

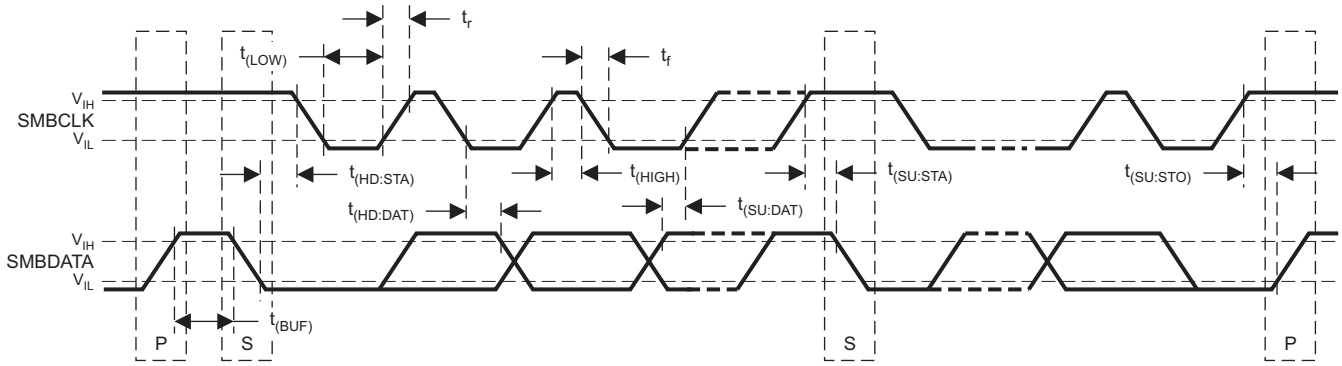

Figure 1. I²C/SMBus/PMBus Timing Diagram

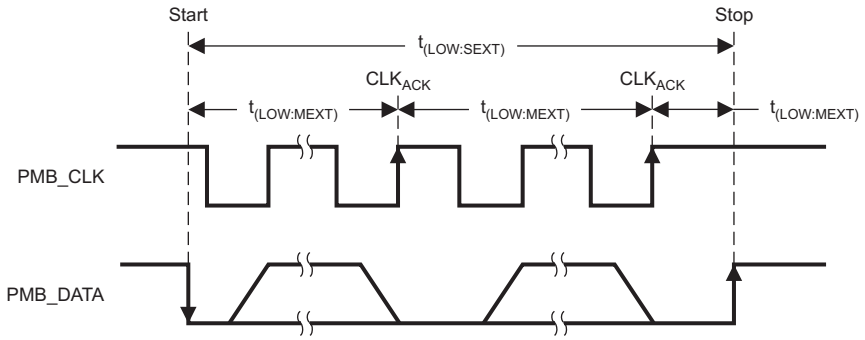

Figure 2. Bus Timing in Extended Mode

FUNCTIONAL OVERVIEW

ARM PROCESSOR

The ARM7TDMI-S processor is a member of the ARM family of general-purpose 32-bit microprocessors. The ARM architecture is based on reduced instruction set computer (RISC) principles where two instruction sets are available, the 32-bit ARM instruction set and the 16-bit thumb instruction set. The thumb instruction set allows for higher code density, equivalent to a 16-bit microprocessor, with the performance of the 32-bit microprocessor.

The three-stage pipelined ARM processor architectecture includes fetch, decode, and execute stages. Major blocks in the ARM processor include a 32-bit ALU, 32 × 8 multiplier, and barrel shifter. A JTAG port is also available for firmware debugging.

Memory

Within the UCD30xx architecture, there is a 1024 × 32-bit boot ROM that contains the initial firmware startup routines for PMBUS communication and nonvolatile (flash) memory download. This boot ROM is executed after power-up reset, and the code can determine if there is a valid flash program written. If a valid program is present, the ROM code branches to the main flash program execution.

Two separate flash memories are present inside the device. The 32-Kbyte program flash memory is organized as an 8-K × 32-bit memory block and is intended to be for firmware program space. The block is configured with page-erase capability for erasing blocks as small as 1 Kbyte per page, or with a mass erase for erasing the entire program flash array. This program flash endurance is specified at 1000 cycles and the data retention is good for 100 years. The 2-Kbyte data flash array is organized as a 512 × 32 memory. The data flash is intended for firmware data value storage and data logging. Thus, the data flash is specified as a high-endurance memory of 20 K cycles. The data retention for data flash is good for 100 years.

For run-time data storage and scratchpad memory, a 4-Kbyte RAM is available for firmware usage. The RAM is organized as a 1024 × 32-bit array.

The UCD30xx uses error-correcting code (ECC) for improving data integrity and providing high-reliability storage of data flash contents. ECC works by using dedicated hardware to generate extra check bits with the user data, as it is written into the flash memory. This adds to the 32-bit memory array an additional six bits, which are then stored into the flash array. These extra check bits, along with the hardware ECC algorithm, allow for any single-bit error to be detected and corrected on microprocessor reading from the data flash.

CPU Memory Map and Interrupts

When the device comes out of power-on reset and the boot ROM has executed, the large data memories are mapped to the processor in two different ways.

For code execution out of ROM, the boot ROM configures the memory as follows:

Copyright © 2009–2010, Texas Instruments Incorporated

DELTA ELECTRONICS EX. 1018
Page 20

- **Memory Map (ROM Mode)**

ADDRESS	SIZE	MODULE	COMMENT
0x0000 0000–0x0000 0FFF	16 blocks, 4 KBytes (each)	Boot ROM (maps to all 16 blocks)	Memory select[0]
0x0000 1000–0x0000 1FFF			
...			
0x0000 9000–0x0000 9FFF			
0x0000 A000–0x0000 AFFF			
0x0000 B000–0x0000 EFFF			
...			
0x0000 F000–0x0000 FFFF			
0x0001 0000–0x0001 7FFF	32 Kbytes	Program flash	Memory select[1]
0x0001 8000–0x0001 87FF	2 Kbytes	Not used	
0x0001 8800–0x0001 8FFF	2 Kbytes	Data flash	Memory select[2]
0x0001 9000–0x0001 9FFF	4 Kbytes	Data RAM	Memory select[3]

For code execution out of flash, the boot ROM configures the memory as follows:

- **Memory Map (Flash Mode)**

ADDRESS	SIZE	MODULE	COMMENT
0x0000 0000–0x0000 7FFF	32K bytes	Program flash	Memory select[1]
0x0000 8000–0x0000 9FFF	8K bytes	Not used	
0x0000 A000–0x0000 AFFF	4K bytes	Boot ROM	Memory select[0]
0x0000 B000–0x0001 7FFF	52K bytes	Not used	
0x0001 8000–0x0001 87FF	2K bytes	Not used	
0x0001 8800–0x0001 8FFF	2K bytes	Data flash	Memory select[2]
0x0001 9000–0x0001 9FFF	4K bytes	Data RAM	Memory select[3]

- **Memory Map (System and Peripherals Blocks)**

ADDRESS	SIZE	MODULE	COMMENT
0xFFF7 D800–0xFFF7 D8FF	256 bytes	UART	Peripheral select[9]
0xFFF7 DC00–0xFFF7 DCFF	256 bytes	12-BIT ADC	Peripheral select[8]
0xFFF7 E000–0xFFF7 E0FF	256 bytes	Loop 4 CLA filter	Peripheral select[7]
0xFFF7 E100–0xFFF7 E1FF	256 bytes	Loop 4 DPWM	Peripheral select[7]
0xFFF7 E400–0xFFF7 E4FF	256 bytes	Loop 3 CLA filter	Peripheral select[6]
0xFFF7 E500–0xFFF7 E5FF	256 bytes	Loop 3 DPWM	Peripheral select[6]
0xFFF7 E800–0xFFF7 E8FF	256 bytes	Loop 2 CLA filter	Peripheral select[5]
0xFFF7 E900–0xFFF7 E9FF	256 bytes	Loop 2 DPWM	Peripheral select[5]
0xFFF7 EC00–0xFFF7 ECFF	256 bytes	Loop 1 CLA filter	Peripheral select[4]
0xFFF7 ED00–0xFFF7 EDFF	256 bytes	Loop 1 DPWM	Peripheral select[4]
0xFFF7 F000–0xFFF7 F0FF	256 bytes	Misc. analog control	Peripheral select[3]
0xFFF7 F600–0xFFF7 F6FF	256 bytes	PMBus interface	Peripheral select[2]
0xFFF7 F800–0xFFF7 F8FF	256 bytes	SPI	Peripheral select[1]
0xFFF7 FA00–0xFFF7 FAFF	256 bytes	GIO	Peripheral select[1]
0xFFF7 FD00–0xFFF7 FDFF	256 bytes	Timer	Peripheral select[0]
0xFFFF FD00–0xFFFF FDFF	256 bytes	MMC	SAR select[2]
0xFFFF FE00–0xFFFF FEFF	256 bytes	DEC	SAR select[1]
0xFFFF FF20–0xFFFF FF37	23 bytes	CIM	SAR select[0]

Copyright © 2009–2010, Texas Instruments Incorporated

ADDRESS	SIZE	MODULE	COMMENT
0xFFFF FF40–0xFFFF FF50	16 bytes	PSA	SAR select[0]
0xFFFF FFD0–0xFFFF FFEC	28 bytes	SYS	SAR select[0]

The registers and bit definitions inside the system and peripheral blocks are detailed in the programmer's guide for each peripheral.

Table 2. Interrupt Vector Table

NAME	MEMORY MODULE NAME	MODULE COMPONENT OR REGISTER	DESCRIPTION	PRIORITY
Unused				(Lowest) 0
BRN_OUT_INT	Misc. analog control	Brownout	Brownout interrupt	1
EXT_INT	GIO	External interrupts	Interrupt on one or all external input pins	2
WDRST_INT	Timer	Watchdog control	Interrupt from watchdog exceeded (reset)	3
WDWAKE_INT	Timer	Watchdog control	Wake-up interrupt when watchdog equals half of set watch time	4
SCI_ERR_INT	UART or SCI	UART or SCI control	UART or SCI error interrupt. Frame, parity, or overrun	5
SPI_INT	SPI	SPI control	SPI-related interrupt for overrun and/or end of SPI transmission	6
SCI_RX_INT	UART or SCI	UART or SCI control	UART RX buffer has a byte	7
SCI_TX_INT	UART or SCI	UART or SCI control	UART TX buffer empty	8
PMBUS_INT	PMBus	PMBus	PMBus-related interrupt	9
COMP_INT	Misc. analog control	Analog comparator control	Analog comparator interrupt	10
DIG_COMP_INT	ADC	12-bit ADC control	Digital comparator interrupt	11
OVF16_4_INT	Timer	16-bit timer PWM 4	16-bit timer PWM4 counter overflow interrupt	12
PWM4CMP_INT	Timer	16-bit timer PWM 4	16-bit timer PWM4 counter compare interrupt	13
OVF16_3_INT	Timer	16-bit timer PWM 3	16-bit timer PWM3 counter overflow interrupt	14
PWM3CMP_INT	Timer	16-bit timer PWM 3	16-bit timer PWM3 counter compare interrupt	15
OVF16_2_INT	Timer	16-bit timer PWM 2	16-bit timer PWM2 counter overflow interrupt	16
PWM2CMP_INT	Timer	16-bit timer PWM 2	16-bit timer PWM2 counter compare interrupt	17
OVF16_1_INT	Timer	16-bit timer PWM 1	16-bit timer PWM1 counter overflow interrupt	18
PWM1CMP_INT	Timer	16-bit timer PWM 1	16-bit timer PWM1 counter compare interrupt	19
OVF24_INT	Timer	24-bit timer control	24-bit timer counter overflow interrupt	20
CAP1_INT	Timer	24-bit timer control	24-bit timer capture 1 interrupt	21
CMP1_INT	Timer	24-bit timer control	24-bit timer compare 1 interrupt	22
CMP0_INT	Timer	24-bit timer control	24-bit timer compare 0 interrupt	23
CAP0_INT	Timer	24-bit timer control	24-bit timer capture 0 interrupt	24
ADC_CONV_INT	ADC	12-bit ADC control	ADC control end-of-conversion interrupt	25
HS Loop4	DPWM	Loop 4	1) Every (1–16) DPWM switching cycles 2) CLF flag shutdown	26
HS Loop3	DPWM	Loop 3	1) Every (1–16) DPWM switching cycles 2) CLF flag shutdown	27
HS Loop1	DPWM	Loop 1	1) Every (1–16) DPWM switching cycles 2) CLF flag shutdown	28
HS Loop2	DPWM	Loop 2	1) Every (1–16) DPWM switching cycles 2) CLF flag shutdown	29
FAULT_INT	GIO	External faults	Fault-pin interrupt	30
SYS_SSI_INT	SYS	System software	System-software interrupt	(Highest) 31

Copyright © 2009–2010, Texas Instruments Incorporated

DELTA ELECTRONICS EX. 1018
Page 22

SYSTEM MODULE

The system module contains the interface logic and configuration registers to control/configure all the memory, peripherals, and interrupt mechanisms. The blocks inside the system module are the address decoder, memory management controller, system management, central interrupt, and clock control units.

Address Decoder (DEC)

Programmer's Reference Manual: *UCD30xx Memory Address Manager (DEC) Programmer's Manual*

The address decoder generates the memory selects for flash, ROM and RAM arrays. The memory map addresses are selectable through configurable register settings for low and high boundaries. These fine memory selects can be configured from 1-K to 16-M sizes. Power-on reset uses the default addresses in the memory map for ROM execution, which is then configured by the ROM code to the application setup. During access to the DEC registers, a wait state is asserted to the CPU. DEC registers are only writable in the privilege mode for user-mode protection.

Memory Management Controller (MMC)

Programmer's Reference Manual: *UCD30xx Memory Controller (MMC) Programmer's Manual*

The MMC manages the interface to the peripherals by controlling the interface bus for extending the read and write accesses to each peripheral. The unit generates eight peripheral select lines with 1 Kbyte of address space decoding. The interface can be configured with an interface clock from divide-by-2 through divide-by-16. For divide-by-2, each peripheral requires two clock accesses.

System Management (SYS)

Programmer's Reference Manual: *UCD30xx System Module (SYS) Programmer's Manual*

The SYS unit contains the software access protection by configuring user privilege levels to memory or peripheral modules. It contains the ability to generate fault or reset conditions on decoding of illegal address or access conditions. Also available is clock control setup for system operation.

Central Interrupt Module (CIM)

Programmer's Reference Manual: *UCD30xx Central Interrupt Module (CIM) Programmer's Manual*

The central interrupt module accepts 32 interrupt requests for meeting firmware timing requirements. The ARM itself only supports two levels of interrupts, FIQ and IRQ, with FIQ being the higher interrupt to IRQ. The CIM provides hardware expansion of interrupts by the use of FIQ/IRQ vector registers for providing the offset index in a vector table. This numerical index value indicates the highest-precedence channel with a pending interrupt and is used to locate the interrupt-vector address from the interrupt-vector table. Interrupt channel 0 has the lowest precedence (priority 0), and interrupt channel 31 has the highest precedence (priority 31). The CIM is level-sensitive to the interrupt requests, and each peripheral must keep the request high until the ARM responds to it. To remove the interrupt request, the firmware should clear the request as the first action in the interrupt service routine. The request channels are maskable. This allows individual channels to be selectively disabled.

Clock Control Module (CCM)

Programmer's Reference Manual: *UCD30xx Miscellaneous Analog Control (MAC) Programmer's Manual*

The clock-control module performs the peripheral clock divide-down and maintains the phase relationship needed for communication between the ARM processor and MMC-controlled peripheral bus. Figure 3 shows the UCD30xx clock domains. The interface clock (ICLK) is the peripheral clock nomenclature. This clock can run at a frequency between one-half to one-eighth of the ARM microcontroller clock (MCLK). The clock setting is configurable through firmware control. The default ICLK frequency is set to 15.6 MHz.

Copyright © 2009–2010, Texas Instruments Incorporated

DELTA ELECTRONICS EX. 1018
Page 23

The clock source for the logic comes from a high-speed oscillator that can run at a maximum frequency of 250 MHz. This high-frequency clock domain is known at the DPWM clock (PCLK) domain. This is divided down by 8 to generate the data clock (DCLK, 31.25 MHz) domain and the microcontroller (MCLK, 31.25 MHz) domain. The default MCLK frequency is set to 31.25 MHz. However, just like ICLK, this MCLK frequency is also configurable through firmware control. DCLK supports the control-loop processing, whereas MCLK supports the ARM processor. Inside the clock-control module (CCM), MCLK has divide-down ratios for generating the interface clock (ICLK) in support of peripherals. For watchdog monitoring of the processor, a separate low-frequency oscillator is provided for generating independent watchdog events.

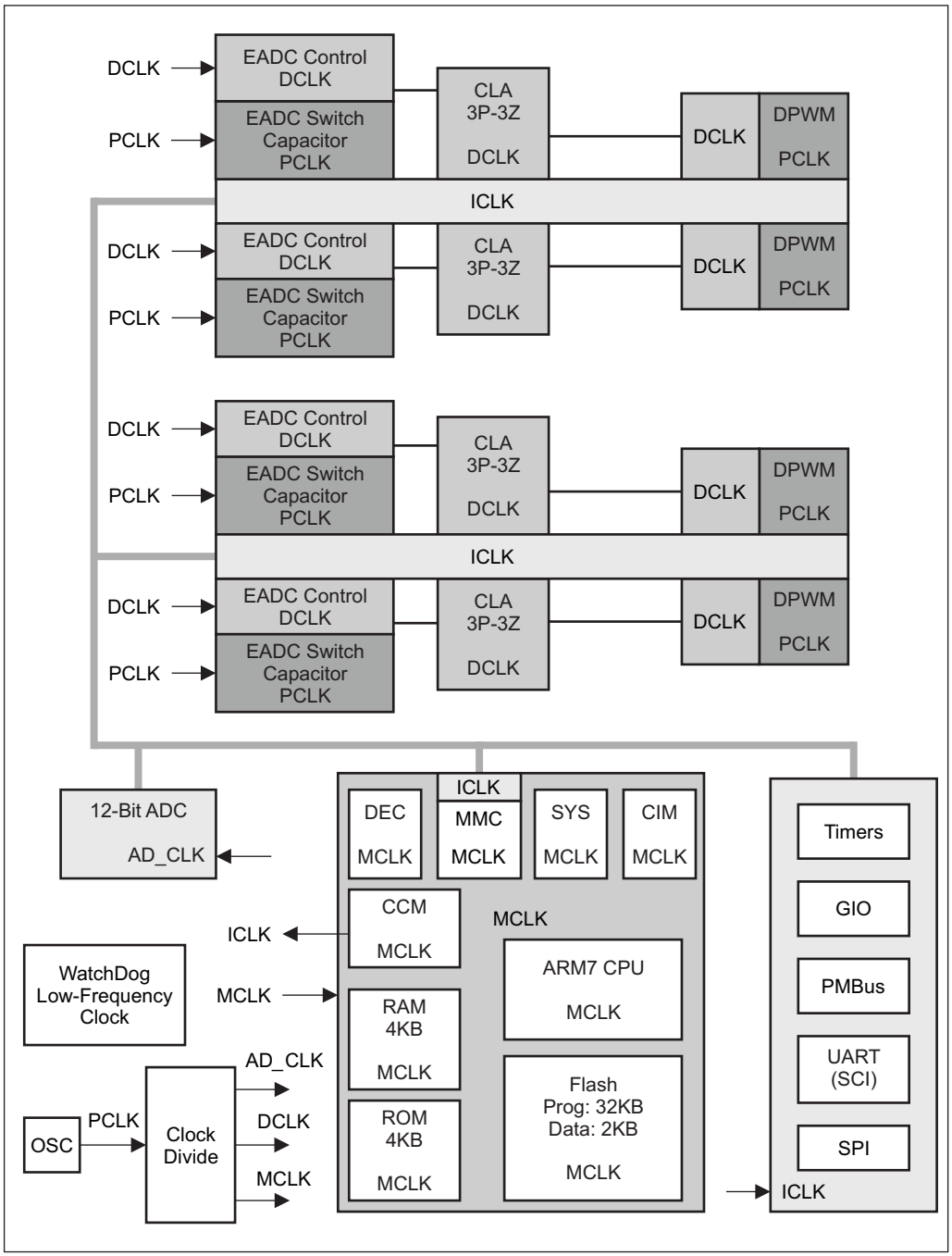

PCLK = 250 MHz DCLK = 31.25 MHz AD_CLK = 15.6 MHz
MCLK = 31.25 MHz (default) ICLK = 15.6 MHz (default)

Figure 3. UCD30xx Clock Domains

Copyright © 2009–2010, Texas Instruments Incorporated

DELTA ELECTRONICS EX. 1018
Page 24

PERIPHERALS

Fusion Digital Power Peripherals

At the core of the UCD30xx controller are its four Fusion Digital Power peripherals (FDPP). Each FDPP can be configured to drive from one to eight DPWM outputs. Each FDPP consists of a differential input error ADC (EADC), a hardware-accelerated digital three-pole/three-zero (3p/3z) compensator, and a digital PWM module.

Error ADC (EADC) Module

Programmer's Reference Manual: *UCD30xx Fusion Digital Power Peripherals Programmer's Manual*

For initialization of the EADC module, see the UCD30xx *Fusion Digital Power Peripherals Programmer's Manual.*

The EADC module within the UCD30xx is shown in Figure 4. It contains a differential input, switch-capacitor filter circuit for receiving the differential voltage signal (signal being sensed) from external pins EAPx and EANx. It is compared with an internal 10-bit DAC output in order to measure the error voltage signal. Gain control (G) is provided in the amplifier for 1-, 2-, 4-, or 8-times amplification of the differential error signal. This error signal is then summed with an internal reference voltage (800 mV) and compared against this same reference voltage as input to the EADC module. Thus the error signal input to EADC is:

$$\text{Error} = G \times [(V_{refp} - V_{refm}) - (EAPx - EANx)]$$

The full-scale of the EADC range is effectively 512 mV (8 mV times 64). Finally, the EADC value is converted from thermometer code to a 2s-complement value for digital processing.

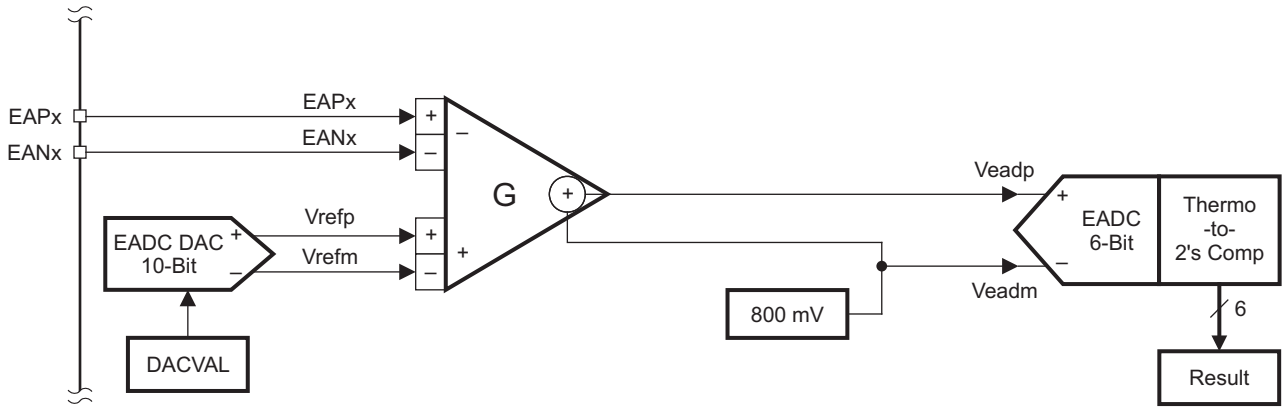

Figure 4. Error ADC Module

The EADC control logic receives the sample request from the DPWM module for initiating an EADC conversion. EADC control circuitry captures the EADC 6-bit code and strobes the 3p/3z digital compensator for processing of the representative error.

Table 3. EADC and DAC Parameters

EADC	
Input differential range (EAPx – EANx)	0 V–1.6 V
Common-mode range (EAPx, EANx)	0 V–1.6 V
Input impedance	1.5 MΩ (typical)
Sampling rate	> 10 Msps
Conversion time	< 100 nS
INL	±2 LSB (max)
DNL	±1 LSB (max)
Gain error	±1 LSB (~1.5% max)

Table 3. EADC and DAC Parameters (continued)

DAC	
DAC output range (Vrefp – Vrefm)	0 V–1.6 V
DAC resolution	10 bits (1024 steps)
DAC LSB	1600/1024 = 1.56 mV
INL	±1.5 LSB (max)
DNL	±1 LSB (max)
Gain error	±1% (max)
Settling time	< 1 μS
GENERAL	
Front-end gain (G)	1, 2, 4, 8
Effective resolution (EAPx – EANx)	8 mV (G = 1), 4 mV (G = 2), 2 mV (G = 4), 1 mV (G = 8)
Temperature coefficient	< 50 PPM / °C

Digital Compensator

Programmer's Reference Manual: *UCD30xx Fusion Digital Power Peripherals Programmer's Manual*

The architecture of the digital compensator in the UCD30xx system is shown in Figure 5. The compensator is a digital filter consisting of a second-order infinite-impulse-response (IIR) filter section cascaded with a first-order IIR filter section. The function of the CLA is to operate on the 6-bit output from the error ADC (EADC) and generate a command output for: (1) a fixed-frequency DPWM duty-ratio control (duty-ratio control mode), or (2) a fixed-duty-ratio DPWM frequency control (resonant mode), or (3) a fixed-frequency DPWM phase-shift control of a slave DPWM with respect to a master DPWM (phase-shift control mode).

The filter mathematics calculates a per-unit command (duty-ratio control or frequency control) output [$Y_{Q15}(n)$] between 0 and 1. In duty-ratio-control mode, this command output is then multiplied by the user-programmable DPWM switching period (PRD) to determine the duty ratio of the DPWM output. The 18-bit commanded duty ratio output [$Y_{Q0}(n)$] from the CLA is made up as a 14.4 word. The upper 14 bits specify the low-resolution DPWM clock (PCLK, 250 MHz or 4 ns) counts, and the lower 4 bits specify the high-resolution clock phase, allowing a best-case DPWM resolution of 250 ps. In resonant mode, the per-unit command output [$Y_{Q15}(n)$] is multiplied by the user-programmable maximum switching period (Max PRD) to determine the switching period of the DPWM output. This commanded switching period output [$Y_{PQ0}(n)$] is a 14-bit word. In this case, the CLA also generates a fixed-duty-ratio output [$Y_{Q0}(n)$] that is based on a user-programmable percentage of the maximum switching period. In Figure 5 this programmable percentage is indicated as % of PRD.

Two banks of filter coefficients can be saved in the device. The user firmware can switch them, depending on the operation of the power stage. The coefficients can be calculated using standard digital control techniques.

Copyright © 2009–2010, Texas Instruments Incorporated

DELTA ELECTRONICS EX. 1018
Page 26

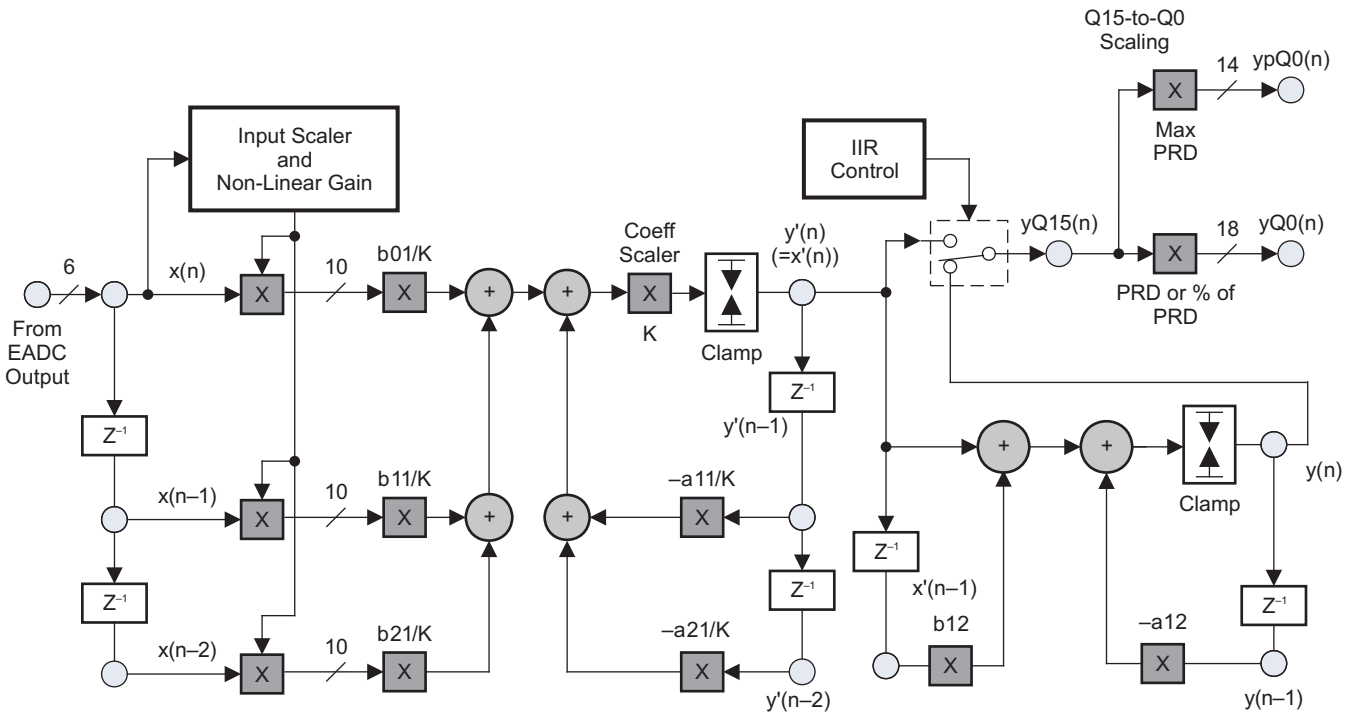

Figure 5. Compensator Architecture

The compensator also allows the minimum and maximum duty cycle to be programmed.

Compensator (CLA) Input

The input to the filter is a 6-bit signed number generated by the EADC. This number represents a 2s-complement value of the power-supply output-voltage error signal (Vref – Vsense). This data value is registered on the system clock inside the EADC, and a converted data-ready signal is supplied to start the filter operation on this new data. The error inputs E(n – 1) and E(n – 2) are registered in the 6-bit format to save space. The current E(n) is not registered inside the filter. The E(n) inputs to the filter can also come from a register that is programmed by the user software. This happens only when the CPU sample-control bit is enabled. This allows the CLA to be a math coprocessor for the UCD30xx CPU. The E(n), E(n – 1), and E(n – 2) values can only be written by the user software by setting the filter-enable bit to 0.

Compensator Input Scaling

The input of the CLA is scaled to retain the physical meaning of the converted data and to implement nonlinear control. The scaling function does two things. First, it divides the input by 1024, which approximately converts it back to the millivolts (1/1000 V) scale that was converted. Second, it multiplies the input by a user-programmable nonlinear gain, and the resulting 10-bit output of the scaler is applied to the filter input. During power-supply control-loop design, the nominal gain value in the nonlinear gain table and the EADC analog front end (AFE) gain must be taken into consideration. After the control design, if one of these values (nonlinear gain or AFE gain) is changed, then the other one must be adjusted accordingly in order to maintain the same product (nonlinear gain × AFE gain) and hence the same (designed) loop gain for the power supply. The following shows the AFE control-bit settings, the corresponding AFE gain applied to the input, and the resulting EADC resolution.

Control bits = 0x3 → 8× AFE gain → EADC resolution = 1mV/lsb
Control bits = 0x2 → 4× AFE gain → EADC resolution = 2mV/lsb
Control bits = 0x1 → 2× AFE gain → EADC resolution = 4mV/lsb
Control bits = 0x0 → 1× AFE gain → EADC resolution = 8mV/lsb

Copyright © 2009–2010, Texas Instruments Incorporated

DELTA ELECTRONICS EX. 1018
Page 27

Digital Compensator Coefficients

Each compensator in the UCD30xx has a set of seven coefficients. These are stored in 12-bit Q11 format. There are two such banks or *pages* of these coefficient sets. This allows CLA-coefficient bank switching at any time during operation. Both pages of coefficients are based at the same CPU (ARM) offset address and are accessed through the page-active control bit and page-read control bit. To read a bank of coefficients, the page-read bit is set to point to the desired bank (1 for bank 1 or 0 for bank 0). To program/write a bank of coefficients, one must first make the opposite bank active by writing to the page-active control bit. The switching of coefficient banks occurs only after the filter has completed the control output calculations for the current sampling period. The coefficient bank-active status bit must be polled to determine which bank is active. Once the opposite bank is active, the user software can then write to the inactive page.

The compensator architecture in UCD30XX results in the following z-domain transfer function:

$$G_{CLA}(z) = \frac{b_{01} + b_{11}z^{-1} + b_{21}z^{-2}}{1 + a_{11}z^{-1} + a_{21}z^{-2}} \times \frac{1 + b_{12}z^{-1}}{1 + a_{12}z^{-1}} \tag{1}$$

The compensator calculates a duty-ratio command from 0 to 100 percent of the switching period. To do this, all the values inside the compensator are kept as fractions. The hardware expects the coefficients to be scaled down to fractions and be in 2s-complement form. This is done by dividing all of the coefficients of the second-order IIR filter by a 2^n integer that is larger than the largest coefficient.

Example:

$$G_{CLA}(z) = \frac{14.35 - 24.635z^{-1} + 10.418z^{-2}}{1 - 1.521z^{-1} + 0.521z^{-2}} \times \frac{1 - 0.612z^{-1}}{1 - 0.128z^{-1}} \tag{2}$$

B01 = 14.350 → In 12-bit Q11 format, B01 = $(14.350/2^5) \times (2^{11})$ = 0x0396
B11 = –24.635 → In 12-bit Q11 format, B11 = $(-24.635/2^5) \times (2^{11})$ = 0xF9D7
B21 = 10.418 → In 12-bit Q11 format, B21 = $(10.418/2^5) \times (2^{11})$ = 0x029B
A11 = –1.521 → In 12-bit Q11 format, A11 = $-(-1.521/2^5) \times (2^{11})$ = 0x0061
A21 = 0.521 → In 12-bit Q11 format, A21 = $-(0.521/2^5) \times (2^{11})$ = 0xFFDF
B12 = –0.612 → In 12-bit Q11 format, B12 = $(-0.612) \times (2^{11})$ = 0xFB1B
A12 = –0.128 → In 12-bit Q11 format, A12 = $-(-0.128) \times (2^{11})$ = 0x0106

Notice that the scaling factor in the previous example was $2^5 = 32$, the smallest 2^n that is larger than the largest coefficient (24.635 in this example). The scaling factor exponent is programmed into the device for use in the hardware. This scaling factor is also stored as banks so that each independent coefficient set is scaled separately. The same procedure to write new coefficients is used to program the scaling factor.

Duty-Cycle Clamps

The digital filter is equipped with upper and lower duty-ratio clamp values. These clamp values are programmed as percentages that are multiplied by the maximum switching period. These clamp values are fed back into the filter output storage [y'(n – 1) and y'(n – 2)]. The clamp values are also stored in pages with their own page control. The user must poll the clamp active-status bit to determine the active page.

Compensator Stored Calculations Y(n)

The calculated outputs of the filter are stored in 16-bit registers. Thus y'(n – 1), y'(n – 2), and y(n – 1) are stored in 16-bit registers. The filter outputs y'(n – 1) and y'(n – 2) represent the old sampled values of the 2p/2z section of the filter. The old sample output of the complete 3p/3z filter is represented by y(n – 1). These values are truncated down and stored in 16-bit Q15 formats. The user software can read these values at any time during operation by accessing the appropriate registers. The user software can also write to these registers, but this is allowed only when the filter is disabled.

Output Scaling

The output of the CLA represents a control command output in per unit, i.e., in fraction (0 to 1). This output is then multiplied by the switching period of the DPWM to compute the DPWM duty ratio. This duty ratio is an 18-bit value. The 4 least-significant bits determine the high-resolution duty adjustment (250 ps) of the DPWM output. The 14 most-significant bits are used for coarse duty adjustment (4 ns) of the DPWM output.

Copyright © 2009–2010, Texas Instruments Incorporated

DELTA ELECTRONICS EX. 1018
Page 28

In resonant mode, the output is multiplied by the maximum-allowed switching period to modulate the DPWM switching frequency. The filter output is also multiplied by a programmed percentage of the maximum-allowed switching period to generate the required fixed DPWM duty ratio.

Nonlinear Control Capability

The nonlinear control capability of the UCD30xx is implemented by applying a user-programmable gain to the incoming error signal. This gain is applied by use of the filter input scaler. The user has a paged table of five 6-bit values that represent a 4.2 binary number. This allows a gain range of 0.25 to 15.75 in 0.25 increments. The gain values are selected based on the range of the incoming error voltage from the EADC. The error voltage range is determined by comparing it to a set of four 6-bit limits.

Error Range	Gain Applied	Register Bits Used (FLTRNLR1)
E(n) < Limit_0	≥ Gain0	[5–0]
Limit_0 < E(n) < Limit_1	≥ Gain1	[11–6]
Limit_1 < E(n) < Limit_2	≥ Gain2	[29–24]
Limit_2 < E(n) < Limit_3	≥ Gain3	[23–18]
E(n) > Limit_3	≥ Gain4	[17–2]

Five gain values and the four limit selections are set up in a paged structure (Figure 6). This allows the user to configure the off page. The active page is controlled by a bit in the control register. The switching of the pages occurs when the filter is inactive. The status bit must be polled to determine the active page before writing to a bank.

Status Signals

There are five status signals available to the user.

- Two EADC rail signals indicate that the EADC value coming into the filter has reached the maximum or minimum limits.
- A nonlinear page-active status shows the nonlinear table that is currently in use.
- A clamp page-active status shows the clamp page that is currently in use.
- A page-active status shows the coefficient page that is currently in use.

Control Signals

There are seven control signals available to the user.

- The *filter enable control* that turns on and off filter processing. When this bit is disabled the user's software can write to the input error terms and the stored output results.
- The *page active control* sets which bank of coefficients is in use by the filter. The ability to write to the coefficient banks depends on the setting of this control.
- The *read page control* selects which coefficient bank is being read by the user's software.
- The *3 pole 3 zero enable control* turns on the filter processing through the optional 1 pole 1 zero stage.
- The *CPU sample enable control* forces the filter to use the E(n) terms written by the user's software.
- The *clamp page active control* sets which page of clamps are in use by the filter. The ability to write to the clamp pages depends on the setting of this control.
- The *non-linear page active control* sets which page of non-linear gain table and limits are in use by the filter. The ability to write to the non-linear gain table and limits depend on the setting of this control.

Copyright © 2009–2010, Texas Instruments Incorporated

DELTA ELECTRONICS EX. 1018
Page 29

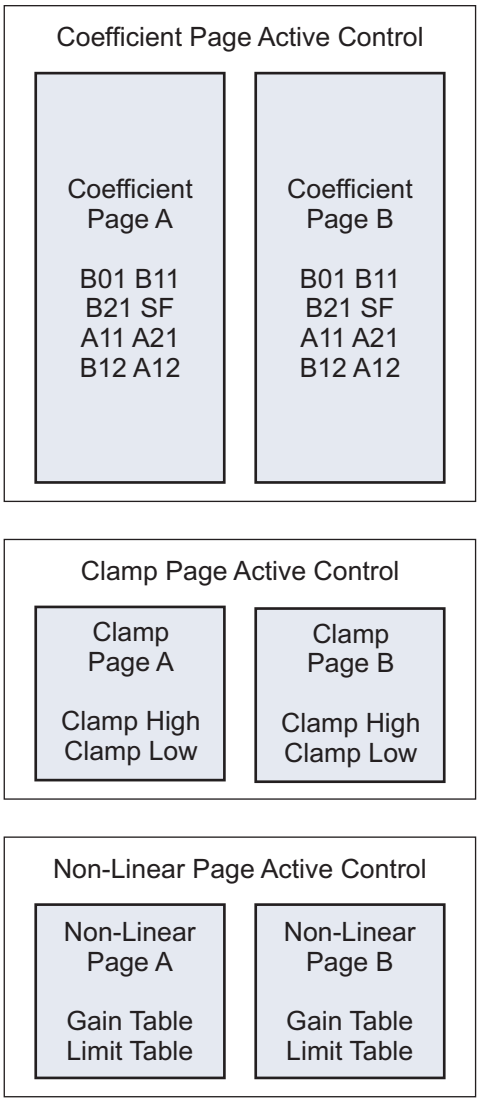

Figure 6. Page Setup for Nonlinear Gain and Limits

DPWM Module

Programmers' Reference Manual: *UCD30xx Fusion Digital Power Peripherals Programmer's Manual*

The DPWM module represents one complete DPWM channel with two independent outputs, A and B. Multiple DPWM modules within the UCD30xx system can be configured to support all key power topologies. DPWM modules can be used as independent DPWM outputs, each controlling one power-supply output-voltage rail. A DPWM module can also be used as a synchronized DPWM, with user-selectable phase shift between the DPWM channels, in order to control power-supply outputs with multiphase or interleaved DPWM configurations.

The output of the compensator feeds the high-resolution DPWM module. The DPWM module produces the pulse-width-modulated outputs for the power-stage switches. The compensator calculates the necessary duty ratio as a 16-bit number in Q15 fixed-point format. This represents a value within the range 0.0 to 1.0. This duty-ratio value is multiplied by the period of the DPWM output to generate the ON time of the corresponding DPWM output. The resolution of the DPWM ON time is 250 ps.

Copyright © 2009–2010, Texas Instruments Incorporated

DELTA ELECTRONICS EX. 1018
Page 30

When the UCD30xx is configured to control multiple power stages from one compensator, each DPWM output-pulse width is adjusted to correct for current imbalance between the power stages. This is done by monitoring the current using the 12-bit ADC and increasing the pulse width of the DPWM signal driving the power stage with the lower current and decreasing the pulse width of the DPWM signal driving the power stage with the higher-measured current.

Each DPWM module can be synchronized to another module or to an external sync signal. An input sync signal causes a DPWM ramp timer to reset. Sync-signal outputs from each of the four DPWM modules occur when the ramp timer crosses a programmed threshold. In this way, the phase of the DPWM outputs for multiple power stages can be tightly controlled.

Each DPWM module supports the following basic features:

- Dedicated 14-bit time base with period/frequency control
- Shadow-period register for end-of-period updates
- Quadruple event-control registers (A and B, rising and falling) (events 1–4), used for on/off DPWM duty-ratio updates
- Phase control relative to other DPWM modules – phase trigger
- Sample trigger placement for output voltage sensing at any point during the DPWM cycle
- Supports two independent edge-placement DPWM outputs (same frequency or period setting)
- Dead time between DPWM A and B outputs
- High-resolution capabilities – 16× clock frequency
- Pulse cycle adjustment: ±11.4 = ±2048 DPWM clocks (PCLK) and 16 high-resolution (HR) phases
- Current-limit flag (CLF) counter/flag capability
- Active-high/active-low output-polarity selection
- Provides events to trigger both CPU interrupts and start of ADC conversions

DPWM Events

Each DPWM can control the following timing events:

1. *Sample trigger count* – This register defines where the error voltage is sampled by the error ADC (EADC) in relationship to the DPWM period. The programmed value set in the register should be one-fourth of the value calculated based on the DPWM clock, as the DCLK (DCLK = 31.25 MHz max) controlling the circuitry runs at one-fourth of the DPWM clock (PCLK = 250 MHz max). When this sample trigger count is equal to the DPWM counter, it initiates a front-end calculation by triggering the error ADC, resulting in CLA calculation and DPWM update. Oversampling can be set for 2, 4, or 8 times the sampling rate.
2. *Phase trigger count* – Count offset for slaving another DPWM (multiphase/interleaved operation)
3. *Period* – Low-resolution switching-period count (count of PCLK cycles)
4. *Event 1* – Count offset for rising DPWM A event (count of PCLK cycles)
5. *Event 2* – DPWM count for falling DPWM A event that sets the duty ratio. Last 4 bits of register are for high-resolution control. Upper 14 bits are the number of PCLK cycle counts.
6. *Event 3* – DPWM count for rising DPWM B event. The last 4 bits of register are for high-resolution control. The upper 14 bits are the number of PCLK cycle counts.
7. *Event 4* – DPWM count for falling DPWM B event. The last 4 bits of register are for high-resolution control. The upper 14 bits are the number of PCLK cycle counts.
8. *Cycle adjust* – Constant offset for event-2 and event-4 adjustments

Basic comparisons between the programmed registers and the DPWM counter can create the desired edge placements in the DPWM. High-resolution edge capability is available on events 2, 3, and 4.

Copyright © 2009–2010, Texas Instruments Incorporated

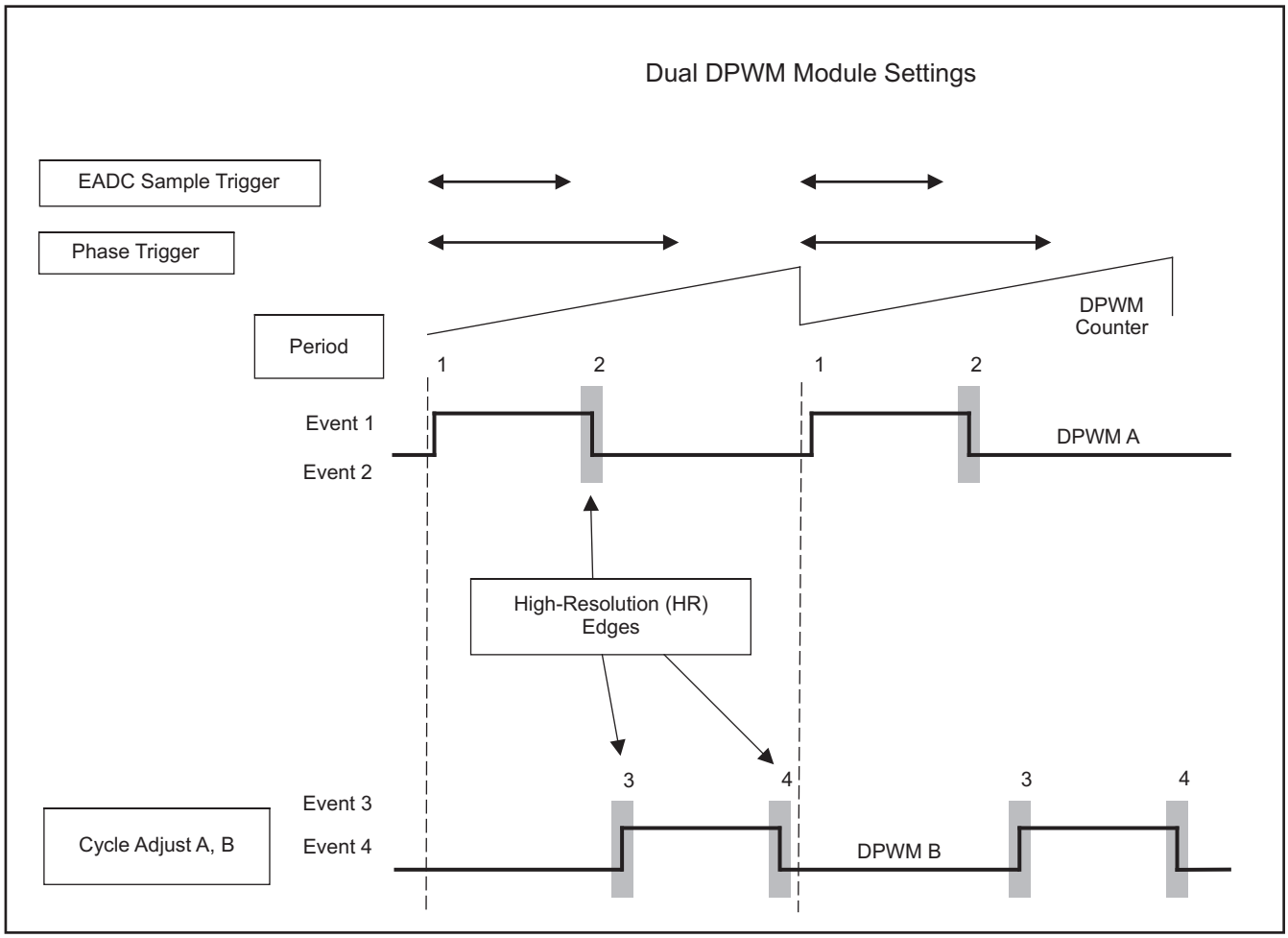

Figure 7. DPWM Events

Copyright © 2009–2010, Texas Instruments Incorporated

DELTA ELECTRONICS EX. 1018
Page 32

DPWM Frequency

The following table shows a few examples of different DPWM frequencies based on a maximum PCLK frequency value of 250 MHz.

Table 4. DPWM Frequency Range

DPWM FREQUENCY (kHz)	PERIOD REGISTER VALUE (Hex)	NUMBER OF BITS (in 14-Bit Period Register)
1953.125	007F	7
976.563	00FF	8
488.28	01FF	9
244.14	03FF	10
122.07	07FF	11
61.035	0FFF	12
30.517	1FFF	13
15.26	3FFF	14
Period register = $(f_{PCLK}/f_{DPWM}) - 1$		

DPWM Modes of Operation

DPWM has four modes of operation. These are (1) duty-ratio control (normal), (2) phase control, (3) frequency control (resonance), and (4) multi-output mode.

Normal Mode (Duty-Ratio Control)

- DPWM B output is slaved and relative to DPWM A.
- When the CLA is enabled for closed-loop control, the event-2 comparison for DPWM A is controlled by the CLA value.
  - The CLA value then sets the pulse width of DPWM A.
- For calculating the dead time between the falling edge of DPWM A and the rising edge of DPWM B, the initial settings of the event-2 and event-3 registers (delta) are used.
  - So for CLA-enabled closed-loop control, the calculated delta (event 3 – event 2) is used to place event 3.
- The event-4 to event-1 registers are used for the front-end dead time by controlling the falling edge of DPWM B to the rising edge of DPWM A.
- Events 2, 3, and 4 can be high-resolution (HR) edges.
- Cycle-adjust A is used for DPWM A pulse-duration adjustment.

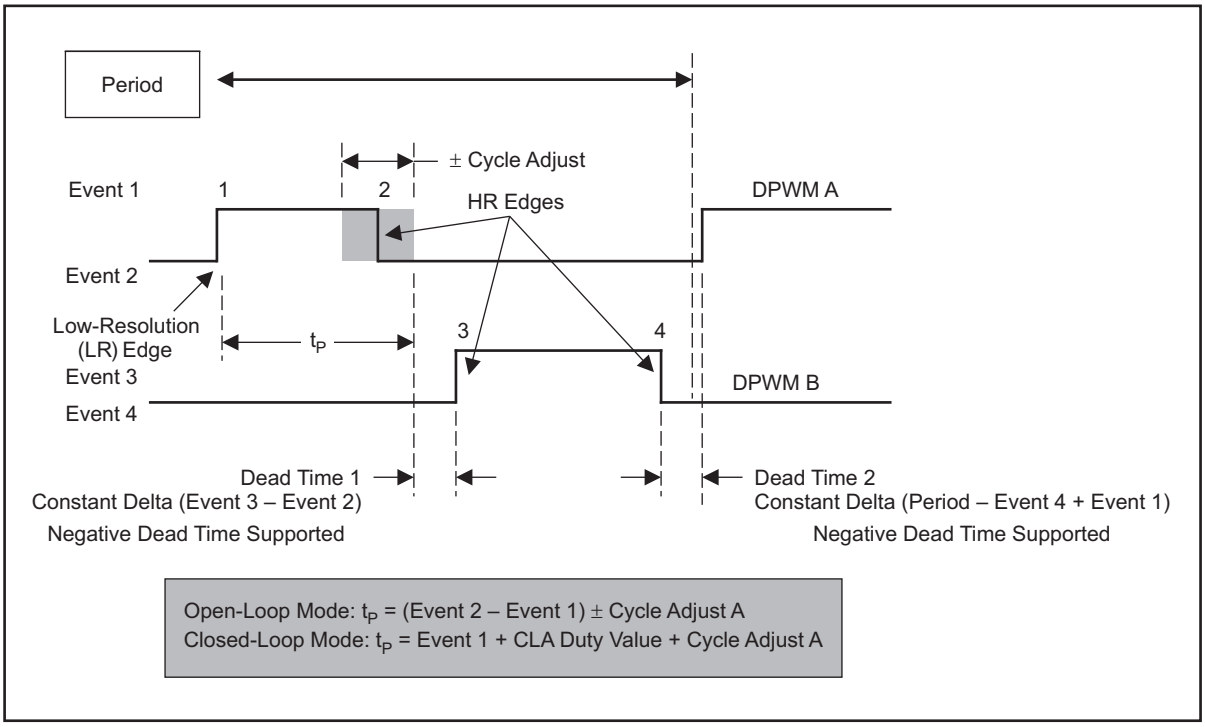

Figure 8. Normal Mode (Duty-Ratio Control) – DPWM Timing Diagram

Compensator Phase Mode (Phase-Shift Control)

- Only used for a slave-mode setup, where the CLA duty-value output is used to calculate the phase offset from a master DPWM.
  - The CLA output is used as the phase adjustment and is supported by low resolution.
- Setting of event 1 and event 2 sets the pulse width of DPWM A.
- Setting of event 3 and event 4 sets the pulse width of DPWM B.
- Events 2, 3, and 4 can be high-resolution edges.
- Cycle-adjust A is used for DPWM A pulse-width adjustment.

Copyright © 2009–2010, Texas Instruments Incorporated

DELTA ELECTRONICS EX. 1018
Page 34

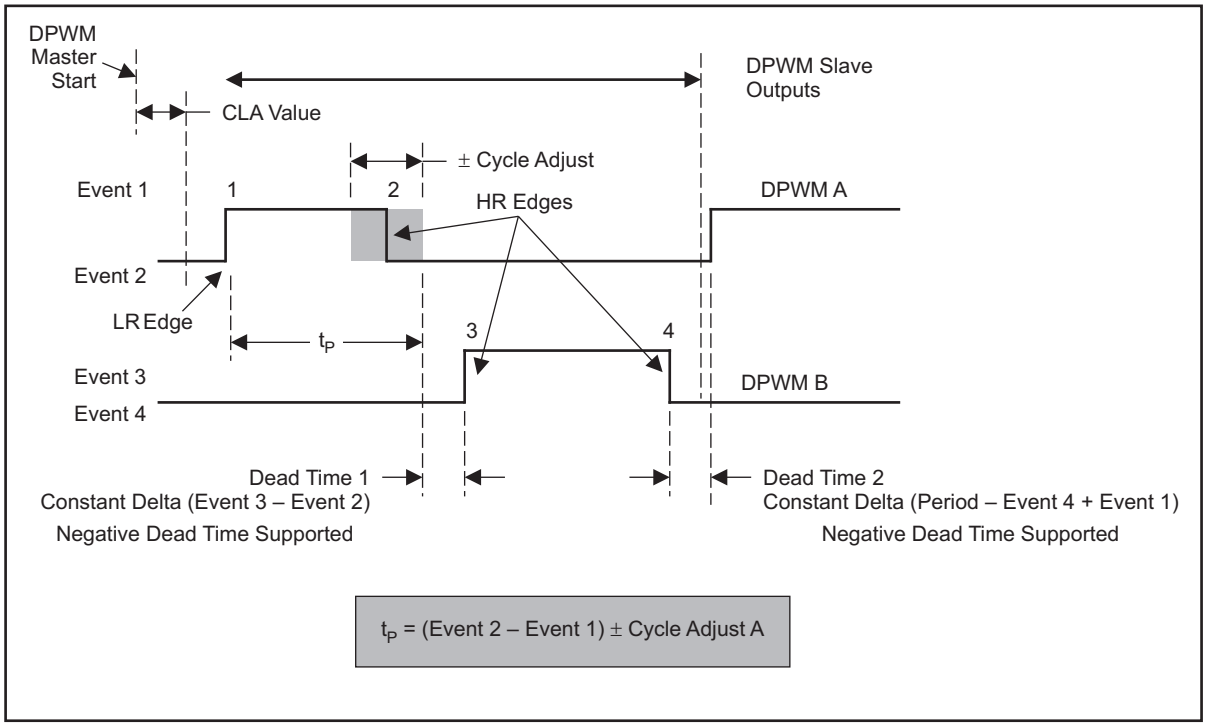

Figure 9. Compensator Phase Mode (Phase-Shift Control) – DPWM Timing Diagram

Resonance Mode (Constant-On Duty Ratio With Variable Period)

- DPWM B output is slaved and relative to DPWM A.
- When the CLA is enabled for closed-loop operation, the event-2 comparison is controlled by the CLA duty-output value.
  - The CLA value sets the pulse width of DPWM A.
- When the CLA is enabled for closed-loop operation, the period is controlled by the CLA period-output value.
- The initial settings of event 2 and event 3 (delta) are used for the calculation of the dead time between the falling edge of DPWM A and the rising edge of DPWM B.
  - So, when the CLA is enabled for closed-loop operation, the calculated delta is used with the CLA duty-output value to place event 3.
- The initial settings of period and event 4 (delta) are used for the calculation of the dead time between the falling edge of DPWM B and rising edge of DPWM A.
  - So, when the CLA is enabled for closed-loop operation, the calculated delta is used with the CLA duty-output value to place event 4.
- Events 2, 3, and 4 can be high-resolution edges.
- Cycle-adjust A is used for period adjustment by the CPU.

Copyright © 2009–2010, Texas Instruments Incorporated

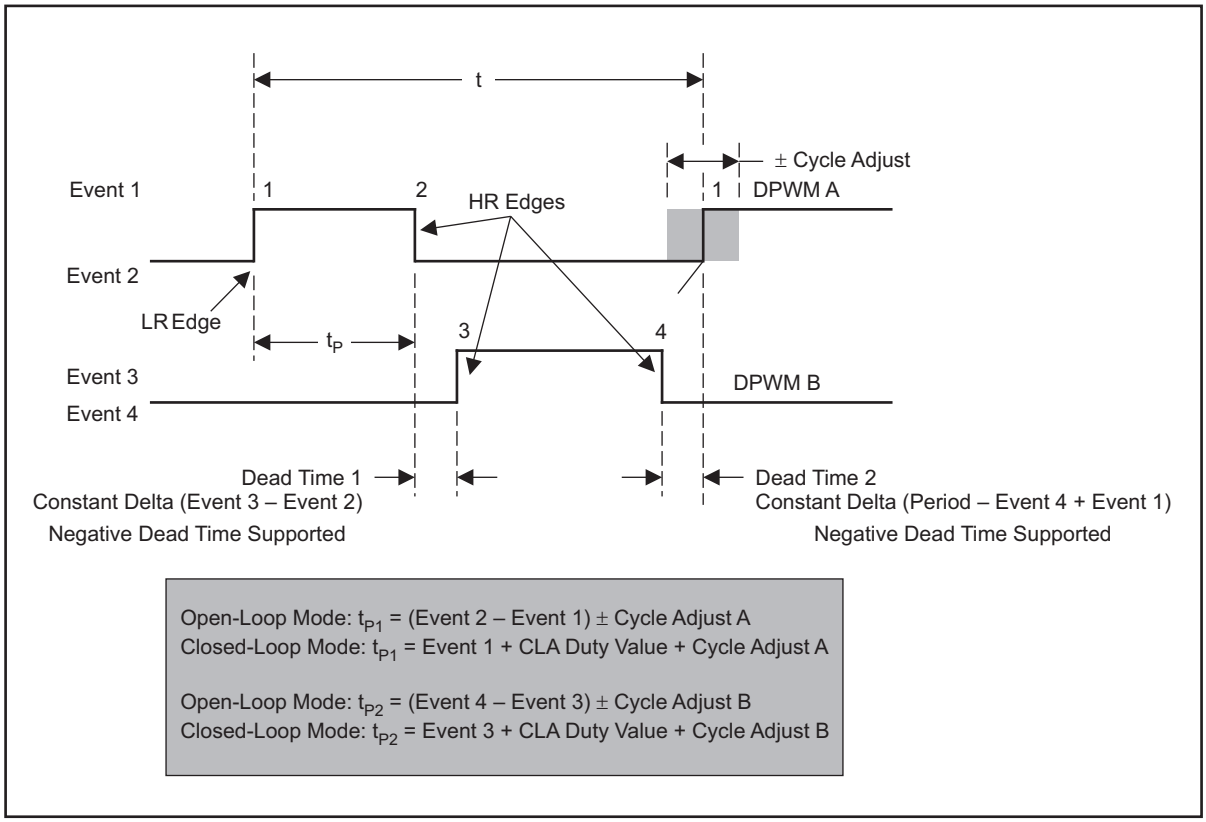

Figure 10. Resonance Mode (Constant-On Duty Ratio With Variable Period) – DPWM Timing Diagram

Multi-Output Mode

- Each DPWM module can be set up with two DPWM outputs of thesame frequency and same duty ratio.
- For multiphase operation, both master- and slave-mode setup.
- CLA duty-ratio output value sets the pulse width of both DPWM A and DPWM B.
- DPWM A always starts at the event-1 setting
- DPWM B always starts at the event-3 setting.
- Can be set up as a slave DPWM, with the phase offset from another DPWM.
- DPWM B can cross over the period count for full on-time duty-cycle operation.
- Events 2 and 4 can be high-resolution edges.
- Cycle-adjust registers for DPWM A and DPWM B are available for small pulse-width adjustments, making independent DPWM duty-ratio adjustments between phases for current-balancing applications.
- While applying a –ve cycle adjust to DPWM B, the minimum on-pulse width (calculated value of tp2 in Figure 11) should be limited to 0. A –ve value for the DPWM B on-pulse width is not valid.

Copyright © 2009–2010, Texas Instruments Incorporated

DELTA ELECTRONICS EX. 1018
Page 36

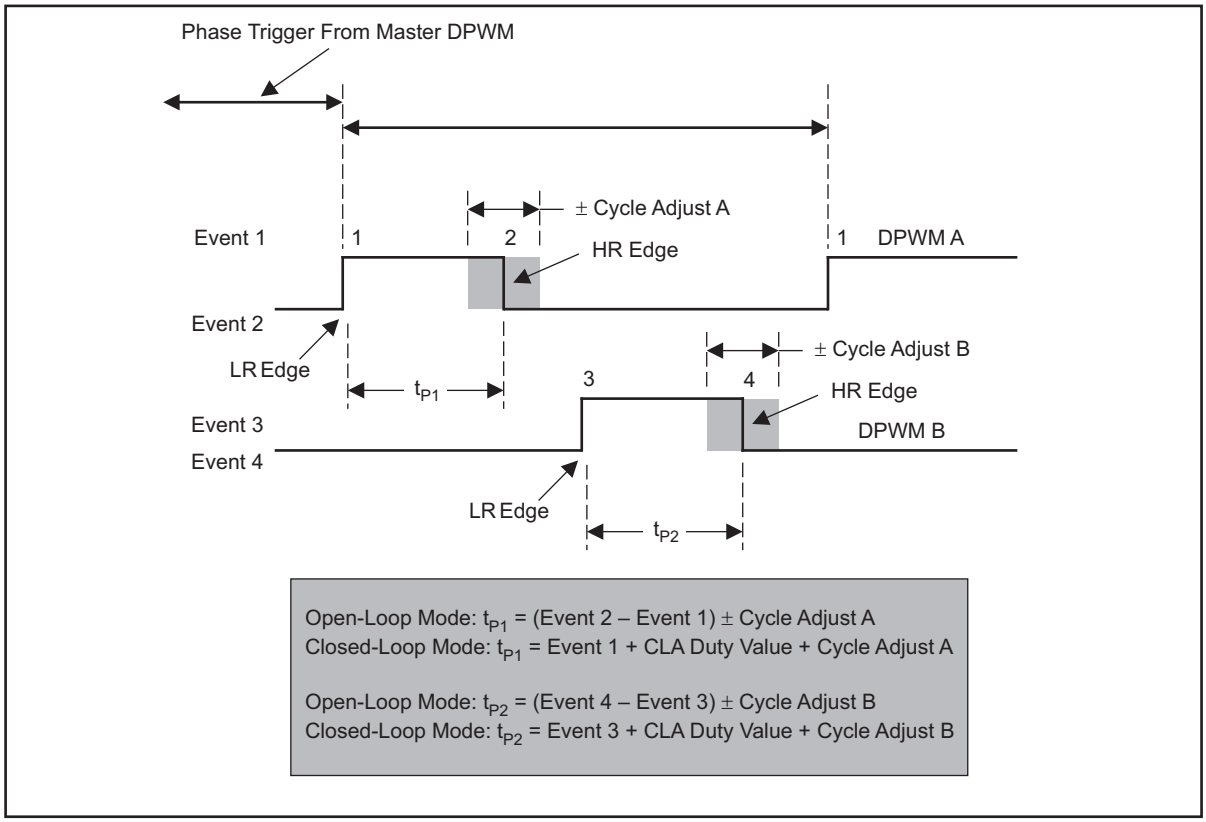

Figure 11. Multi-Output Mode – DPWM Timing Diagram

High-Resolution DPWM

The DPWM high-resolution section has DPWM edge placement capability for up to 16 phases of subclock resolution. For the maximum 250-MHz PCLK (DPWM clock), each phase then represents 1/16 of the 4-ns DPWM clock time, or 250 ps. The DPWM section has a disable bit and resolution-setting bits. The default resolution setting (00) has 16 phases, and the 01 setting has eight phases (even number of phases from 0 to 15). The 10 setting uses four phases set to 0, 4, 8, and 12, whereas the 11 setting uses just the 0 and 8 phases. So, for the maximum 250-MHz DPWM clock, the 00 setting has 250 ps resolution, the 01 setting has 500 ps resolution, the 10 setting has 1 ns resolution, and the 11 setting has 2 ns resolution.

Oversampling

The DPWM module has the capability to trigger an oversampling event by initiating the EADC to sample the error voltage. The default 00 configuration has the DPWM trigger the EADC once based on the sample trigger register value. The oversampling register has the ability to trigger the sampling 2, 4, or 8 times per DPWM period.

DPWM Interrupt Generation

The DPWM has the capability to generate a CPU interrupt based on the DPWM frequency programmed in the period register. The interrupt can be scaled by a divided ratio of up to 255 for developing a slower interrupt service execution loop. Table 5 outlines the divide ratios that can be programmed.

Copyright © 2009–2010, Texas Instruments Incorporated

Table 5. DPWM Interrupt Divide Ratio

DPWM INTERRUPT SCALING/RANGE						
INTERRUPT DIVIDE SETTING	INTERRUPT DIVIDE COUNT	INTERRUPT DIVIDE COUNT (hex)	SWITCHING PERIOD FRAMES (assume 1-MHz loop)	NUMBER OF 32-MHz PROCESSOR CYCLES	NUMBER OF 16-MHz PROCESSOR CYCLES	NUMBER OF 8-MHz PROCESSOR CYCLES
1	0	00	1	32	16	8
2	1	01	2	64	32	16
3	3	03	4	128	64	32
4	7	07	8	256	128	64
5	15	0F	16	512	256	128
6	31	1F	32	1024	512	256
7	47	2F	48	1536	768	384
8	63	3F	64	2048	1024	512
9	79	4F	80	2560	1280	640
10	95	5F	96	3072	1536	768
11	127	7F	128	4096	2048	1024
12	159	9F	160	5120	2560	1280
13	191	BF	192	6144	3072	1536
14	223	DF	224	7168	3584	1792
15	255	FF	256	8192	4096	2048

Compensator Updates of DPWM

Once the sampling trigger register comparison to DPWM counter count is complete, a sampling event is initiated by the DPWM to the EADC. After some logic latency, the updated CLA value is used in event calculations. Usually, the sampling trigger is placed away from the DPWM switching transitions. However, the DPWM has register controls for forcing the CLA event to happen at the end of the DPWM cycle by using the update end of period-enable bit. This control prevents updates from occurring between dead-time events. For testing, a single-frame enable bit can be used for single-step frame operation.

Compensator Output Scaling

The DPWM has the capability to scale the incoming CLA value. The value can be multiplied by 2, 4, or 8 or divided by 2, 4, or 8 for providing different switch capacitor gain/CLA gain options.

DPWM Current-Limit Fault (CLF) Trip Logic

The CLF logic can be enabled for counting the number of current-limit indications per DPWM switching period. The current-limit indication is sampled at the CLA event-2 time. The number of current-limit faults allowed prior to setting the current-limit fault flag is programmed by use of the 8-bit CLF maximum-count register. The logic can be configured with the CLF count-continuous bit set to zero, for counting CLF indications on continuous DPWM switching cycles. This allows the circuit to reset back to 0 if one switching cycle does not have a current-limit fault input. Alternatively, the logic can be configured with the CLF count-continuous bit set to 1, for posting a flag if the CLF maximum-count register value is reached over an indefinite period of time. Generation of the CLF flag is routed to the processor and can be used as a CPU interrupt. The CLF flag is also directly connected to the DPWM logic and is used to make the DPWM outputs go inactive.

For the UCD30xx, the source of the CLF input comes from the output of the analog comparators. Any one of the four analog comparators (A–D) can be selected in the misc. control register as the source of the DPWM CLF input.

Copyright © 2009–2010, Texas Instruments Incorporated

DELTA ELECTRONICS EX. 1018
Page 38

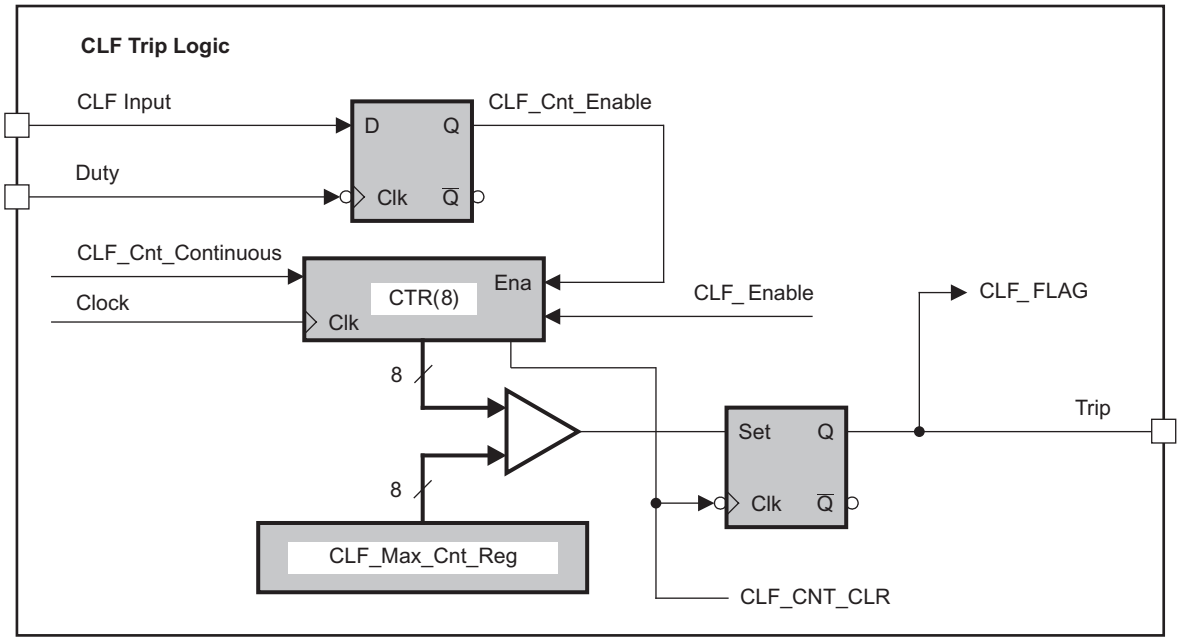

Figure 12. Current-Limit-Flag (CLF) Trip Logic

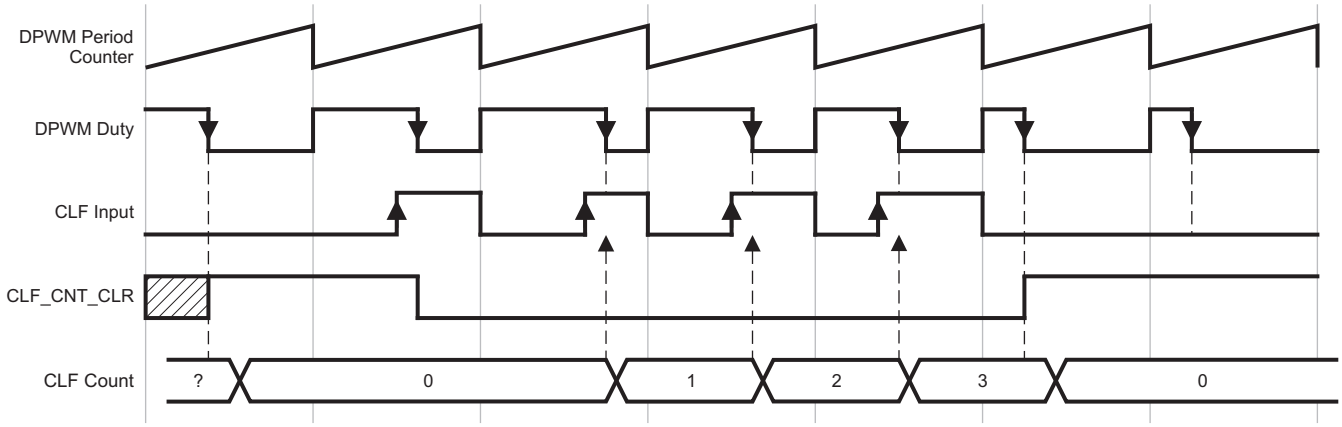

Figure 13. Current-Limit-Flag Trip-Logic Waveform

DPWM GPIO Capability

The DPWM module can be configured to have each A and B output set up independently for GPIO capability. For setting the output, the corresponding GPIO enable bit must be set, and the GPIO value bit must be set to the desired level (1 or 0). Separate enable and value bits exist for each A and B output. Input to the DPWM pins is read from the DPWM overflow register.

DPWM Fault-Protection Logic

A DPWM fault-enable bit is available for causing the DPWM to turn off and go inactive on a fault input from an external pin. Two fault pins are routed to the general-purpose I/O module first, where a latched version of the fault is sent to the CPU as an interrupt, and to the DPWM as a fault input (Fault[1:0]). In normal mode (no DPWM mode bits set), the connected fault signals control both the A and B outputs of the DPWM, causing both DPWM outputs to go inactive with either fault present. In all other modes (MULTI_OUT, RESONANCE, or PHASE), Fault[0] controls DPWM output A and Fault[1] controls DPWM B output, allowing individual fault control of each phase. Once the latched fault value from the general-purpose I/O is cleared through the pending-GPIO fault register, the DPWM resumes at the beginning of a switching period.

Copyright © 2009–2010, Texas Instruments Incorporated

Multiple DPWMs

Compensator Selection

Each DPWM has a 2-bit field for selecting the compensator. Because each EADC is tied to one compensator, this capability allows for multiphase operation from any EADC source. However, this is not true for resonance-mode operation, when CLA1 only controls DPWM1, CLA2 controls DPWM2, and so on.

Internal Device Multisync Capability

The DPWM can be enabled as a slave using the *Multisync Slave-Enable Bit*, for accepting a trigger source set by the master's phase trigger. This trigger is used to reset the slave DPWM to zero count for phase-offset synchronization. The DPWM *Multisync Channel-Select* bits are used for master trigger selection.

Figure 14 and Figure 15 portray the compensator and sync multiplexing options:

Copyright © 2009–2010, Texas Instruments Incorporated

DELTA ELECTRONICS EX. 1018
Page 40

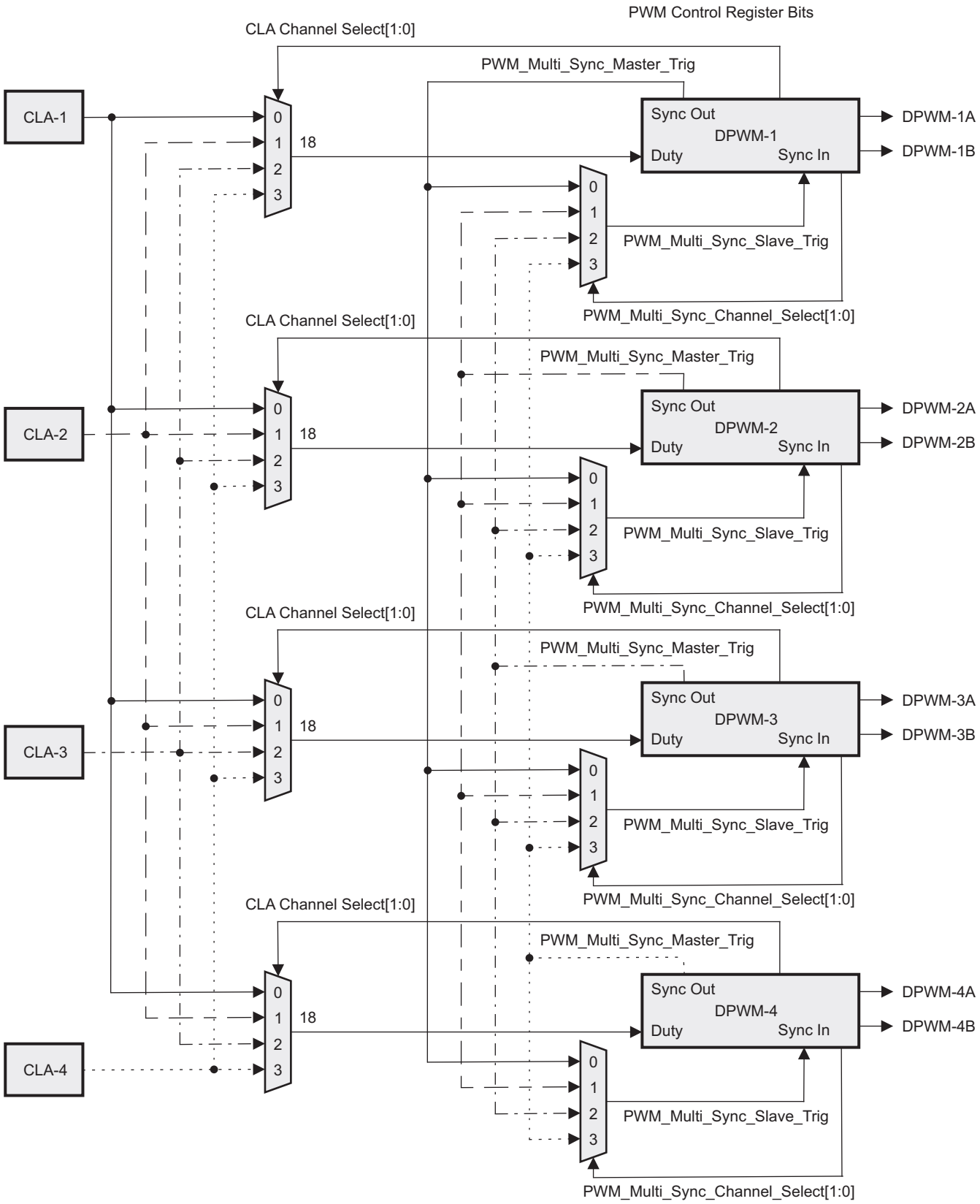

Figure 14. Multiple DPWMs in the UCD3040

DELTA ELECTRONICS EX. 1018
Page 41

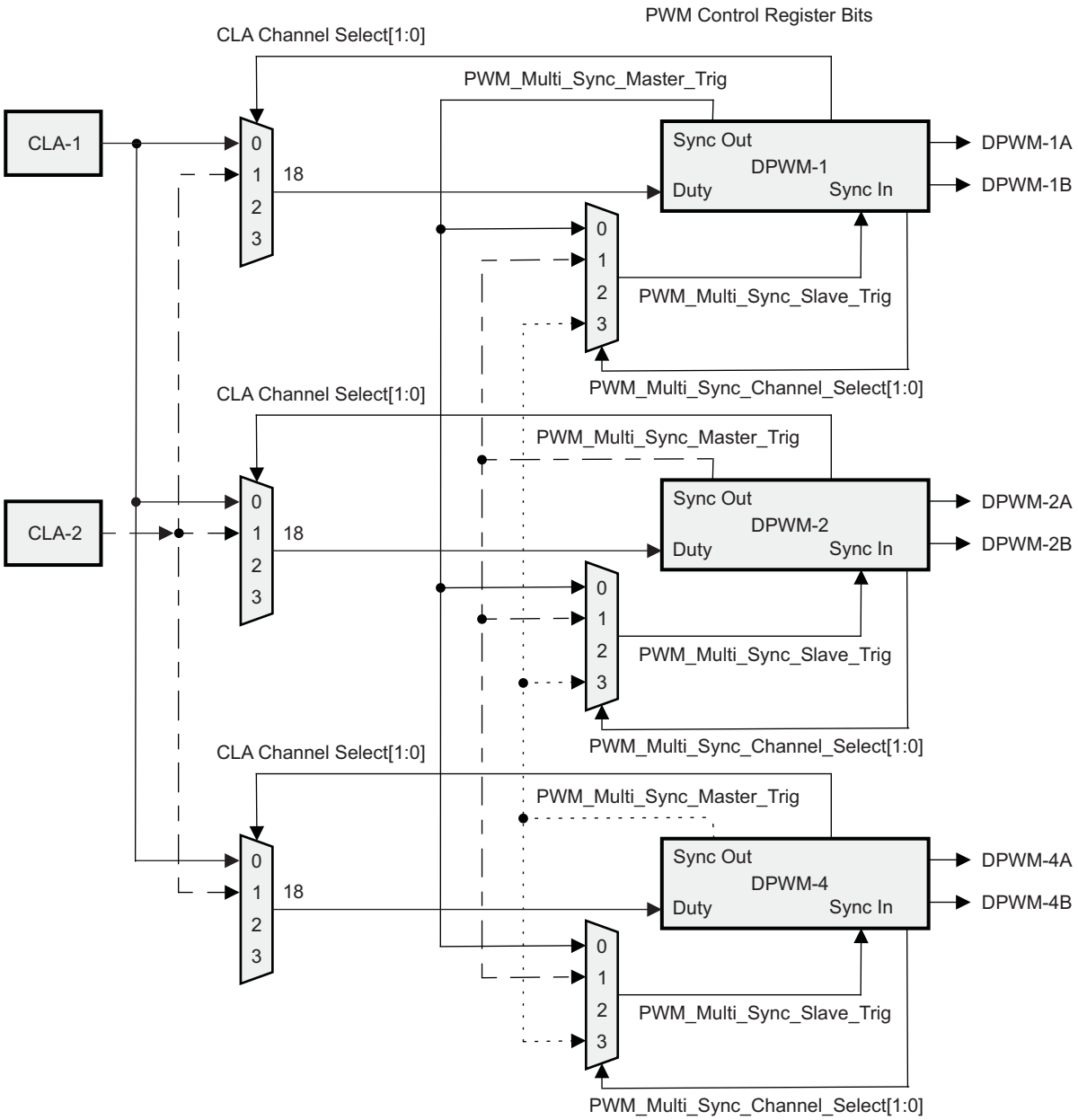

Figure 15. Multiple DPWMs in the UCD3020

Copyright © 2009–2010, Texas Instruments Incorporated

DELTA ELECTRONICS EX. 1018
Page 42

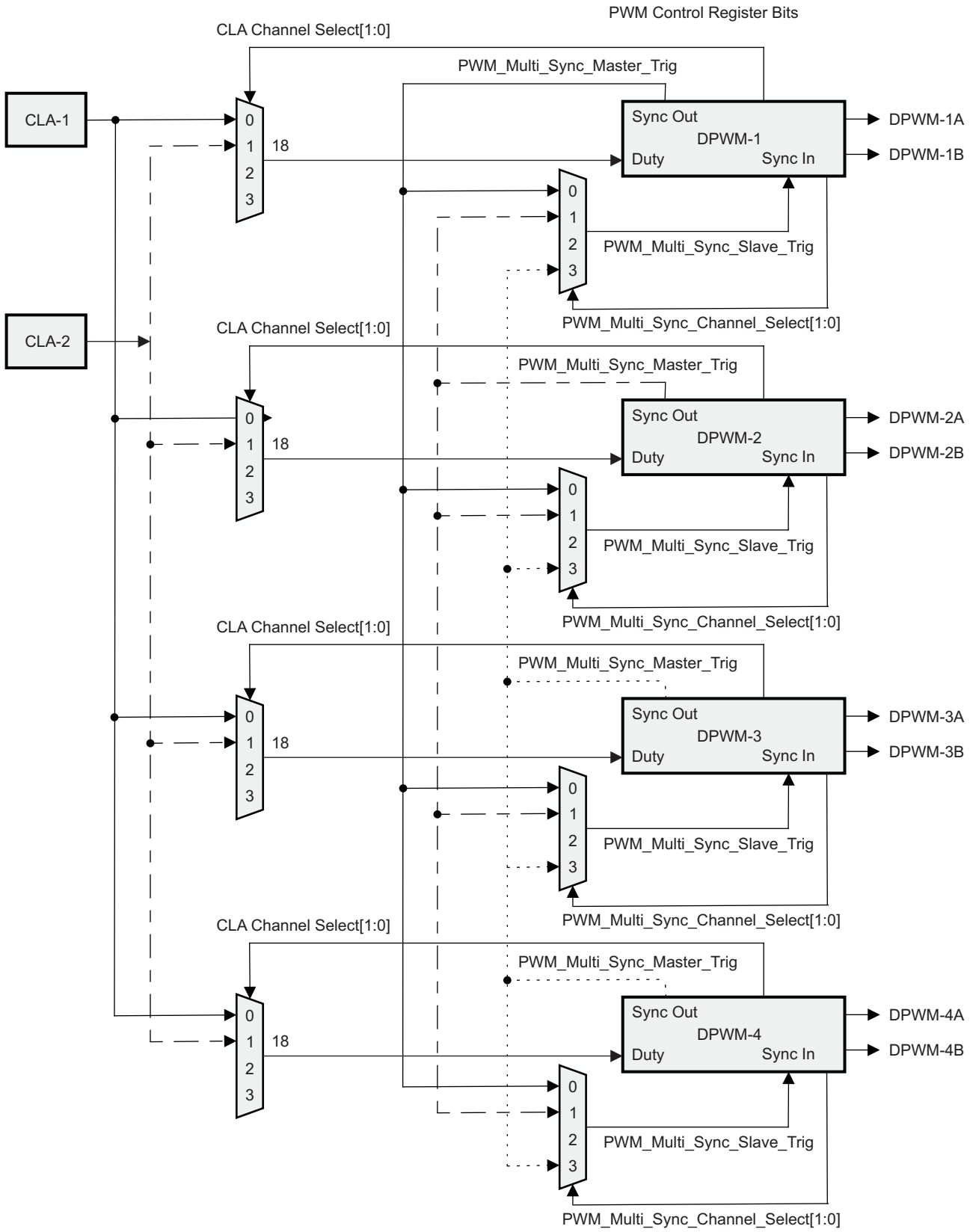

Figure 16. Multiple DPWMs in the UCD3028

External Sync Capability

The DPWM can output a sync signal for synchronizing multiple devices, or can sync to an input pin from an external device. The remote-sync slave-enable bit is used for synchronizing the DPWM from an external pin. For generating an output sync signal, the sync-output divide-ratio bits provide a divide-down ratio pulse of the DPWM switching period. In addition, the output sync must be configured in the device as an output source.

COMMUNICATION PORTS

SPI

Programmer's Reference Manual: *UCD30xx SPI Module Programmer's Manual*

The four-pin serial-peripheral interface (SPI) port controls the SCLK, SIMO (slave-in, master-out), SOMI (slave-out, master-in) and SPICS (SPI chip-select) external pins. The SPI port can be configured as a master or slave. Capability to control the serial clock phase and polarity can be configured. An 8-bit baud-clock generator is included for selecting slower interface frequencies, as the maximum shift clock is divide-by-2 of the interface clock (ICLK). The transmit and receive buffers have programmable data-word length from 3 to 16 bits. Interrupts can be enabled for transmission-complete or receive-buffer reception. For noninterrupt configurations, transmit and receive flags can be used for control status. When no SPI port is needed, the pins can be configured as GPIO through control bits.

UART Serial Communication Interface

Programmer's Reference Manual: *UCD30xx UART Module Programmer's Manual*

The universal asynchronous receiver/transmitter (UART) or serial communication interface (SCI) is included within the device for asynchronous start-stop serial data communication. The interface has a 24-bit prescaler for supporting programmable baud rates and has programmable data-word and stop-bit options. Half- or full-duplex operation is configurable through register bits. A loopback feature can also be set up for firmware verification. The SCI-TX and SCI-RX pins can be used as GPIO pins when the peripheral is not being used.

PMBus

Programmer's Reference Manual: *UCD30xx PMBus Interface Programmer's Manual*

The PMBus interface supports independent master and slave modes controlled directly by firmware through a processor bus interface. Individual control and status registers enable firmware to send or receive I^2C, SMBus, or PMBus messages in any of the accepted protocols, in accordance with the I^2C Specification, SMBus Specification (Version 2.0), or PMBus Power System Management Protocol Specification, respectively.

The PMBus I/F is controlled through a processor bus interface, using a 32-bit data bus and 6-bit address bus. The PMBus I/F is connected to the expansion bus, which features four byte-write enables, a peripheral select dedicated for the PMBus I/F, separated 32-bit data buses for reading and writing of data, and active-low write and output-enable control signals. In addition, the PMBus interface connects directly to the I^2C/SMBus/PMBus clock, data, alert, and control signals.

Example: PMBus Address Decode via ADC12 Reading

The user can allocate two pins of 12-bit ADC input channels, AD-00 and AD-01, for PMBus address decoding. At power up, the device applies I_{BIAS} to each address-detect pin, and the voltage on that pin is captured by the internal 12-bit ADC. The PMBus address is calculated as follows:

$$\text{PMBus Address} = 12 \times \text{bin}(V_{AD01}) + \text{bin}(V_{AD00})$$

where $\text{bin}(V_{AD0x})$ is the address bin for one of 12 addresses as shown in Table 6.

Copyright © 2009–2010, Texas Instruments Incorporated

DELTA ELECTRONICS EX. 1018
Page 44

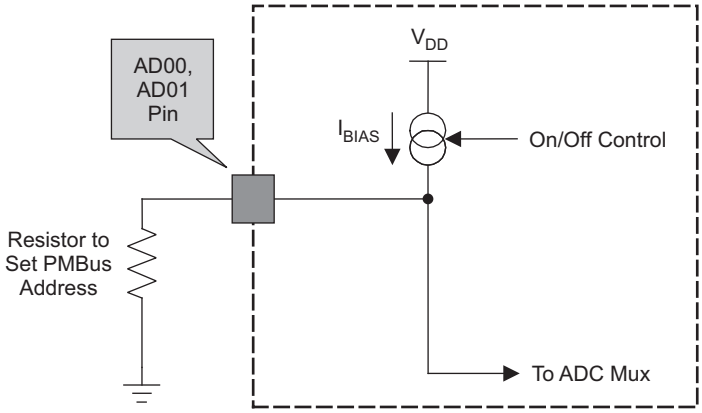

Figure 17. PMBus Address-Detection Method

Table 6. PMBus Address Bins

ADDRESS	VOLTAGE, V	RESISTOR, kΩ
12	2.299	209
11	1.815	165
10	1.463	133
9	1.177	107
8	0.953	86.6
7	0.749	68.1
6	0.604	54.9
5	0.486	44.2
4	0.383	34.8
3	0.308	28.0
2	0.249	22.6
1	0.196	17.8
0	0.157	14.3

A low impedance (short) on the address pin may produce a voltage below the minimum voltage. Also, a high impedance (open) on the address pin may produce a voltage above the maximum voltage. In these cases, the user may design the system to use a default PMBus address.

FAULT PORTS/GIO

Programmer's Reference Manual: *UCD30xx Faults and External Interrupts (GIO) Programmer's Manual*

The general-purpose input/output (GIO) ports are for pins that are not associated with any hardware communication port. These bidirectional pins can be configured by firmware to set the pin to a 1 or 0 value as an output signal. Or the bidirectional pins can be read as inputs through memory-map reads for determining the digital value of the pin. Two of the pins, INT1 and INT2, have additional external interrupt capability. These interrupts can be configured for either falling- or rising-edge detection. Interrupts can be enabled or disabled and flags can be monitored for level status.

For naming purposes, all fault input pins are GIO and are typically used in most power-controller applications as fault-input connections.

TIMERS

Programmer's Reference Manual: *UCD30xx Timer Modules Programmer's Manual*

External to the Fusion Digital Power peripherals, there are three different types of timers in UCD30xx. They are the 24-bit timer, the 16-bit timer, and the watchdog timer.

PWM 24-Bit Timer

For all UCD30xx devices, there is one 24-bit counter PWM timer which runs off the interface clock and can further be divided down by an 8-bit prescaler to generate a slower PWM time period. The timer has two compare registers (data registers) for generating the PWM set/unset events. This PWM compare output (TCOMPARE) is, however, available only in 80-pin UCD3040. The timer has a shadow register (data-buffer register) which can be used to store CPU updates of the compare events while still using the timer. The selected shadow-register update mode happens after the compare event matches.

The two capture pins TCAP0 and TCAP1 (available only in the 80-pin UCD3040) are inputs for recording a capture event. A capture event can be set either to rising, falling, or both edges of the capture pin. On this event, the counter value is stored in the corresponding capture-data register.

The counter reset can be configured to happen on a counter rollover. Five Interrupts from the PWM timer can be set, which are the counter rollover event (overflow), either capture event 0 or 1, or the two comparison-match events. Each interrupt can be disabled or enabled.

On an event comparison on only the second event, the TCMP pin can be configured to set, clear, toggle, or have no action at the output. The value of the PWM pin output can be read for status or simply configured as general-purpose I/O for reading the value of the input at the pin. The first compare event can only be used as an interrupt.

PWM 16-Bit Timers

For all UCD30xx devices, there are four 16-bit counter PWM timers which run off the interface clock and can further be divided down by an 8-bit prescaler to generate slower PWM time periods. Each timer has two compare registers (data registers) for generating the PWM set/unset events. The number of such PWM outputs varies between different UCD30xx devices. For details, check the related pin description table. Each 16-bit timer has a shadow register (data-buffer register) which can be used to store CPU updates of compare events while still using the timer. The selected shadow-register update mode happens after the compare event matches.

The counter reset can be configured to happen on a counter rollover, on a compare-equal event, or by a software-controlled register. Interrupts from the PWM timer can be set due to the counter rollover event, called an overflow, or by the two comparison-match events. Each comparison match and the overflow interrupts can be disabled or enabled.

On an event comparison, the PWM pin can be configured to set, clear, toggle, or have no action at the output. The value of the PWM pin output can be read for status or simply configured as general-purpose I/O for reading the value of the input at the pin.

Watchdog Timer

A watchdog timer is provided on the device for ensuring proper firmware loop execution. The timer is clocked from a separate low-speed oscillator source for providing a timeout range between 10 ms and 1.3 seconds. If the timer is allowed to expire, a reset command is issued to the ARM processor. The watchdog is reset by a simple CPU write bit to the watchdog key register by the firmware routine. On device power up, the watchdog is disabled. Yet after it is enabled, the watchdog cannot be disabled by firmware. Only a device reset can put this bit back to the default disabled state. A half-timer flag is also provided for status monitoring of the watchdog.

ADC12 MODULE

Programmer's Reference Manual: *UCD30xx General Purpose 12-bit ADC (ADC12) Programmer's Manual*

The 12-bit ADC in the UCD30xx is controlled by a state machine that generates the necessary control signals for the successive-approximation register (SAR) ADC operation. The binary search algorithm, sampling time, and bit timing are controlled by the logic for converging on the input analog signal and generating the 12-bit result. The ADC module contains the wrapper and conversion logic for autosequencing a series of ADC conversions. Each sequence has the choice of selecting any one of the 32 input channels, external and internal, available through an analog multiplexer to the ADC. Once converted, the selected channel value is stored in the appropriate result register. Input channels can be sampled in any desired order or programmed to repeat the same channel multiple times during a conversion sequence. Selected channel conversions are also stored in the result registers in time order, where result 0 is the first conversion of a session and result 15 is the last. The maximum number of conversions that can be programmed in an autosequenced session is 16.

Copyright © 2009–2010, Texas Instruments Incorporated

DELTA ELECTRONICS EX. 1018
Page 46

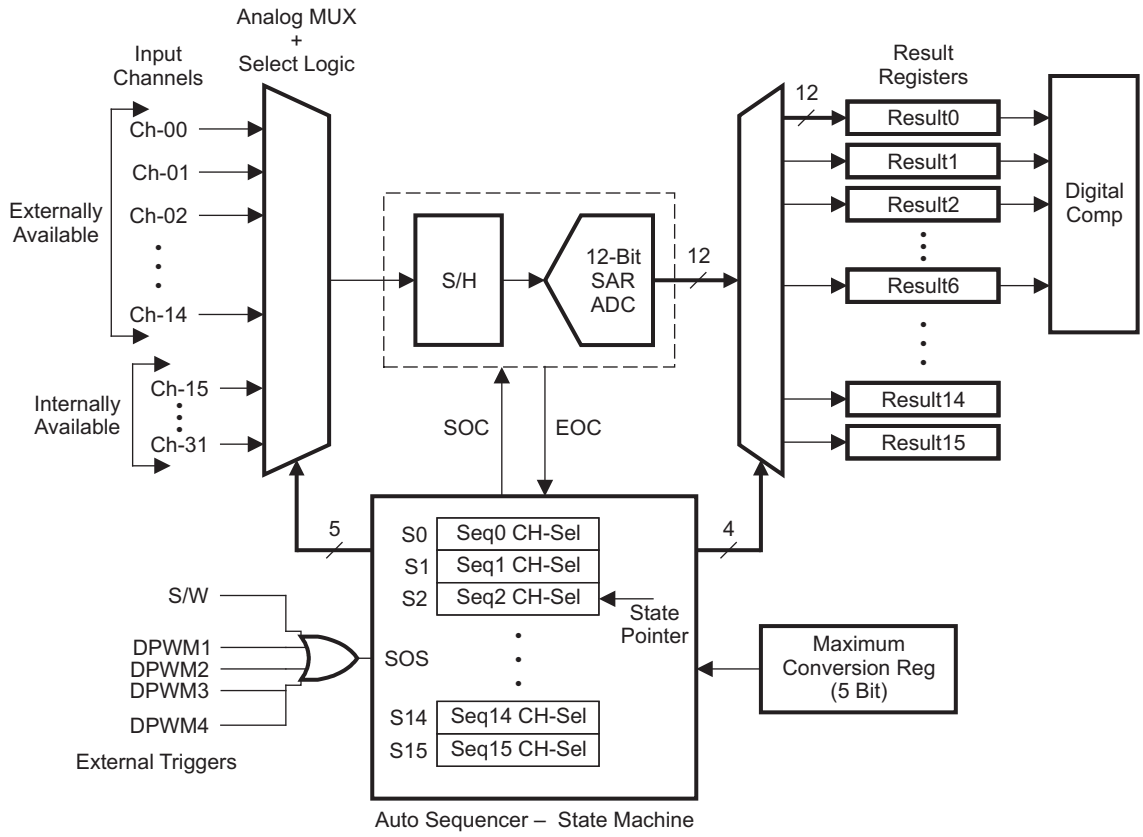

Figure 18. 12-Bit ADC Module

Sequencer

The state sequencer can *autosequence* up to 16 conversions of any channel in a single sequencing session. The result of each conversion is stored in a 16-word result buffer. The desired input channel for each sequenced conversion is programmed in the channel-select sequence registers. So, each channel-select sequence register can be programmed with any of the 32 analog channel inputs to the ADC. The sequence always starts with the programmed channel input in the first channel-select sequence register and progresses to the next channel-select sequence register until the maximum-count register value is reached. The maximum-count register defines the number of conversions in the sequence. Each of the five-bit channel-selection fields can be programmed with any channel. Also, the same channel may be selected multiple times.

The sequencer can be triggered by the CPU or by external trigger sources. The external trigger sources are the DPWM module A and B outputs. Additionally, the sequence can be set up to perform one single-sweep sequence or continually start the sequence on the external trigger source. The sequencer can be enabled to generate a CPU interrupt at the end of the sequence. The end-of-sequence can also be determined by polling the latched-sequence-complete indication bit. This indication bit is cleared on read to ensure a valid complete status.

Channel Mapping

The ADC12 is used to measure both internal and external voltage signals. Table 7 shows the mapping between external/internal analog inputs and the ADC12 converter. The 32 inputs to the ADC12 are referred to by channel numbers. Fifteen of the channels are connected to external pins. The remaining channels are internal and not available to the user. These are used to convert the internal temperature reference and various test signals.

PMBus Address Detection

The PMBus needs six address bits to uniquely identify devices on the bus, where two physical ADC pins have been assigned to decode the address. Thus, each pin is capable of resolving one of eight possible states for decoding three bits. For address detection, the 10-μA current sources must be enabled in the PMBUS trim register for driving current out of channels 0 and 1. Where resistors are connected to ground for producing a voltage in the range from 0.25 V to 2 V, resulting in 0.25 V-per-address-bit steps. Grounded inputs or open pins then result in nonvalid states. Then an ADC conversion can be performed on those channels for detecting the address. The resistor values shown in the table are 1% EIA standard values.

RESISTOR VALUE	PIN VOLTAGE	Addr. VALUE
Open	Vdd	Invalid
200 kΩ	2 V	111
174 kΩ	1.74 V	110
150 kΩ	1.5 V	101
124 kΩ	1.24V	100
100 kΩ	1 V	011
75 kΩ	0.75 V	010
49.9 kΩ	0.5 V	001
24.9 kΩ	0.25 V	000
Ground	0 V	Invalid

Table 7. Analog Input Mapping to ADC12

CHANNEL NO.	INTERNAL/EXTERNAL SIGNALS	DESCRIPTION
Ch-31	AD-15	Loop 4 test signals
Ch-30	AD-15	
Ch-29	AD-15	
Ch-28	AD-15	
Ch-27	AD-15	Loop 3 test signals
Ch-26	AD-15	
Ch-25	AD-15	
Ch-24	AD-15	
Ch-23	AD-15	Loop 2 test signals
Ch-22	AD-15	
Ch-21	AD-15	
Ch-20	AD-15	
Ch-19	AD-15	Loop 1 test signals
Ch-18	AD-15	
Ch-17	AD-15	
Ch-16	AD-15	
Ch-15	Temp sensor	Internal temperature sensor
Ch-14	AD-14	GP analog input to ADC12
Ch-13	AD-13	GP analog input to ADC12
Ch-12	AD-12	GP analog input to ADC12
Ch-11	AD-11	GP analog input to ADC12
Ch-10	AD-10	GP analog input to ADC12
Ch-9	AD-09	GP analog input to ADC12
Ch-8	AD-08	GP analog input to ADC12
Ch-7	AD-07	GP analog input to ADC12
Ch-6	AD-06	GP analog input to ADC12
Ch-5	AD-05	GP analog input to ADC12

Copyright © 2009–2010, Texas Instruments Incorporated

DELTA ELECTRONICS EX. 1018
Page 48

Table 7. Analog Input Mapping to ADC12 (continued)

CHANNEL NO.	INTERNAL/EXTERNAL SIGNALS	DESCRIPTION
Ch-4	AD-04	GP analog input to ADC12
Ch-3	AD-03	GP analog input to ADC12
Ch-2	AD-02	GP analog input to ADC12
Ch-1	AD-01	PMBus addr ID #2 or GP analog input
Ch-0	AD-00	PMBus addr ID #1 or GP analog input

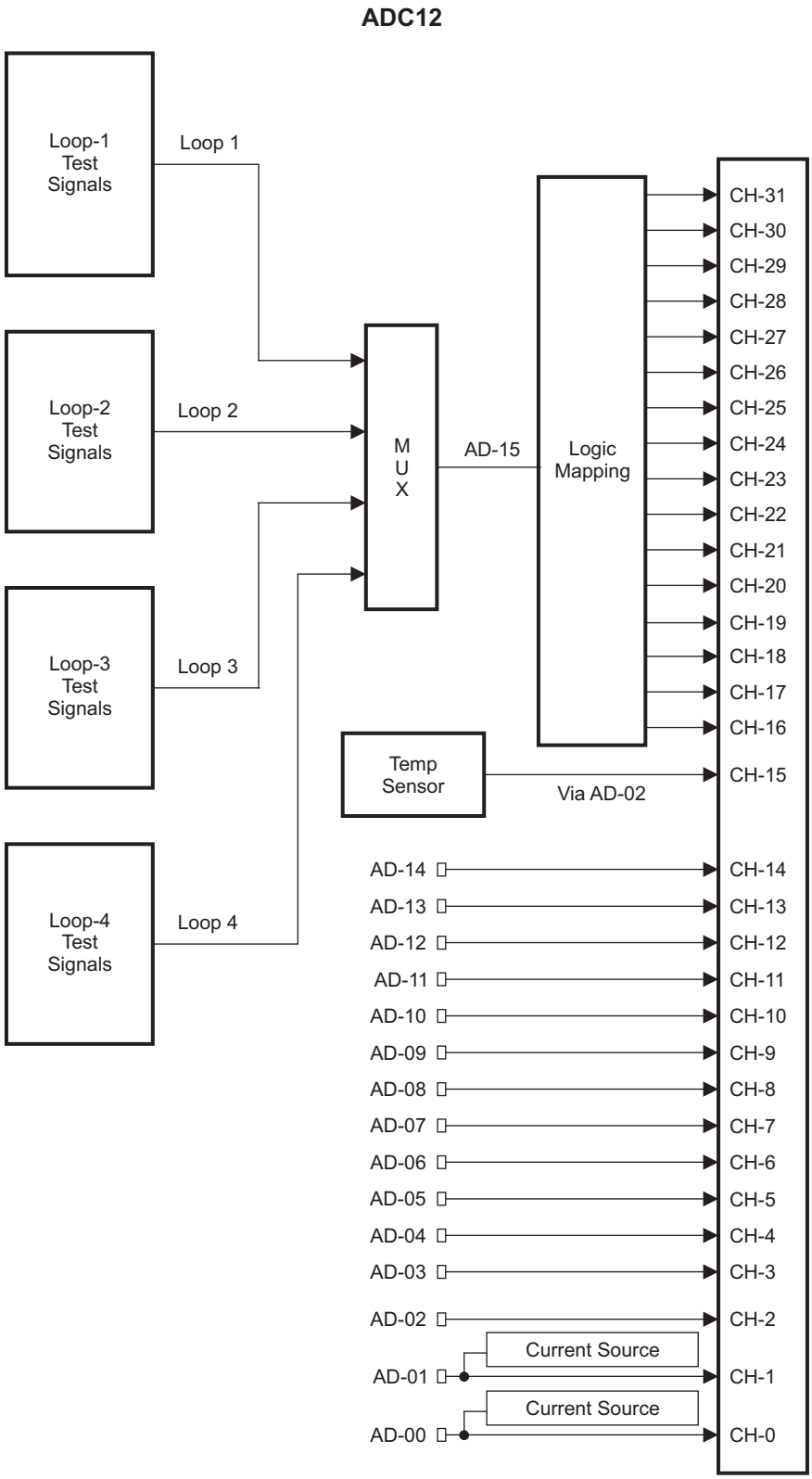

Figure 19. External Analog Input Pin and Internal Connections to ADC12

Copyright © 2009–2010, Texas Instruments Incorporated

DELTA ELECTRONICS EX. 1018
Page 50

Digital Comparators

The ADC wrapper logic has digital comparators that can be used to compare the result registers against programmed high and low limits. The first six conversion result registers (Result 0–Result 5) of the ADC sequence are the ADC results having digital comparator functionality. Therefore, for any signals requiring auto limit monitoring, the user must use these six ADC conversion slots for monitoring of those signals. All 12 bits of conversion result are used for comparison. The digital-comparator logic provides 12 status bits for monitoring, two from each ADC result comparison. These status bits indicate whether the ADC result is higher than or equal to the limit-high register setting, or is lower than or equal to the limit-low register setting.

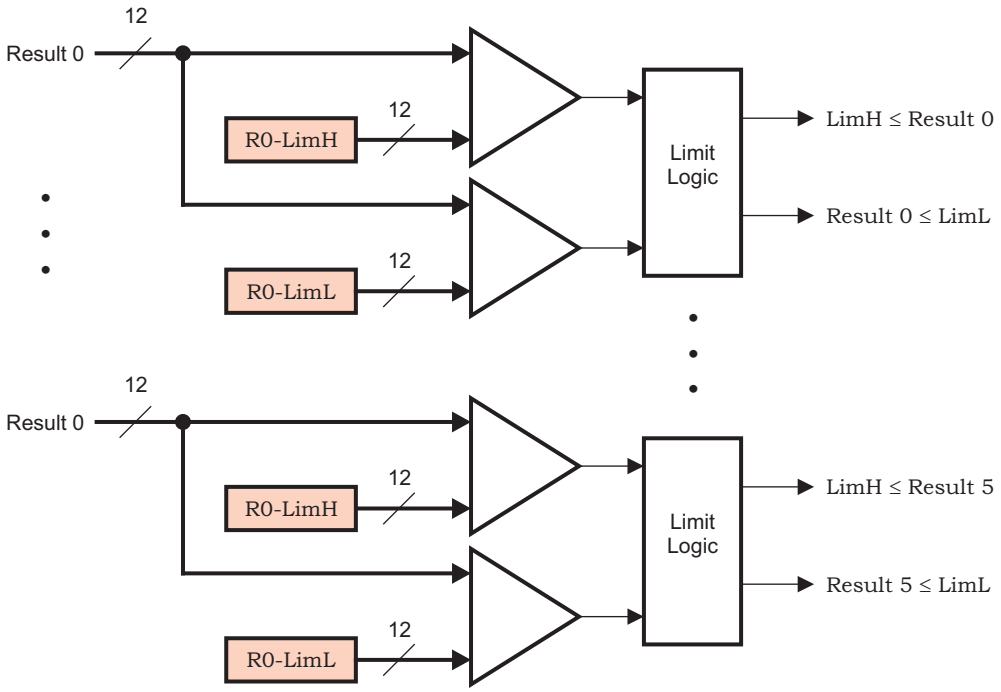

Figure 20. Digital Comparators

MISCELLANEOUS ANALOG

Programmer's Reference Manual: *UCD30xx Miscellaneous Analog Control (MAC) Programmer's Manual*

DELTA ELECTRONICS EX. 1018
Page 51

Power-On Reset (POR)/Brownout Detect (BOD)

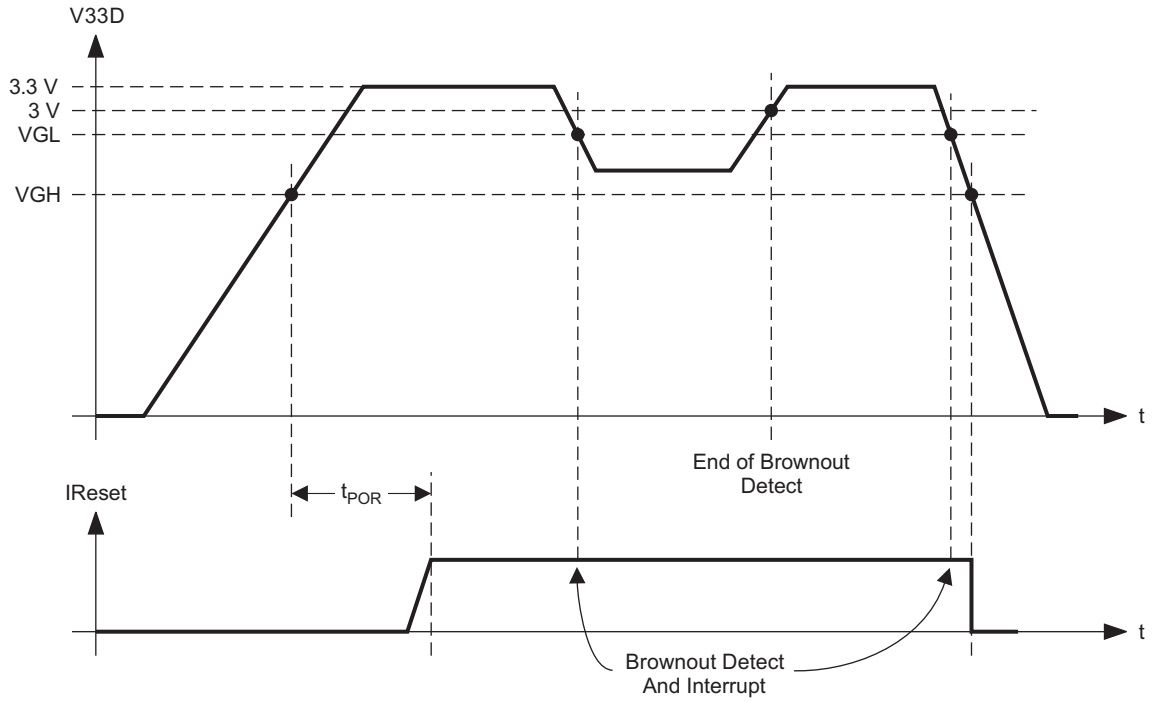

Figure 21. Power-On Reset (POR)/Brownout Detect (BOD) Timing Diagram

Table 8. POR/BOD Limits

PARAMETER		VALUE
VGH	Voltage-good High	2.4 V
VGL	Voltage-good Low	2.9 V
t_{POR}	Time delay after power is good or $\overline{\text{RESET}}$ relinquished	1 ms
IReset	Internal reset signal used by CPU core and all logic	

Copyright © 2009–2010, Texas Instruments Incorporated

DELTA ELECTRONICS EX. 1018
Page 52

The device is held in reset until the 3.3-V supply (V33D) is in the range of 2.1 V to 2.4 V. At 2.4 V, a POR is triggered. The brownout detection is set for 2.9 V, at which level an interrupt is sent to the microprocessor for doing any power-down housekeeping.

Analog Comparators

Analog Comparator Connections

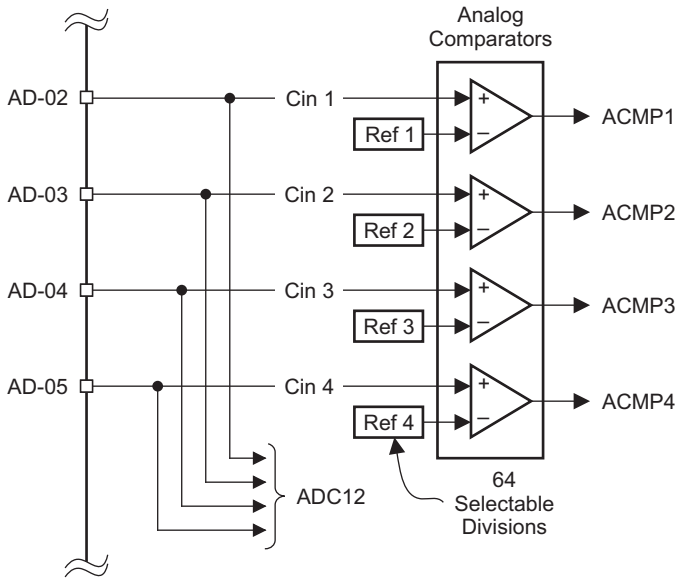

Figure 22. Analog Comparator Connections

There are four analog comparators that can compare an internal voltage reference to an external output pin voltage. The external pins are common with the general purpose ADC12 pins AD-02 through AD-05. The analog comparator reference voltages are programmable independently between 0 V and 2 V. Each programmable reference is controlled by the microprocessor for setting up each 6-bit digital register value. This allows for 2^6 steps or 3.125-mV (2 V/64) step sizes during programming of the comparator reference voltage.

DELTA ELECTRONICS EX. 1018
Page 53

Analog Comparator Actions/Usage

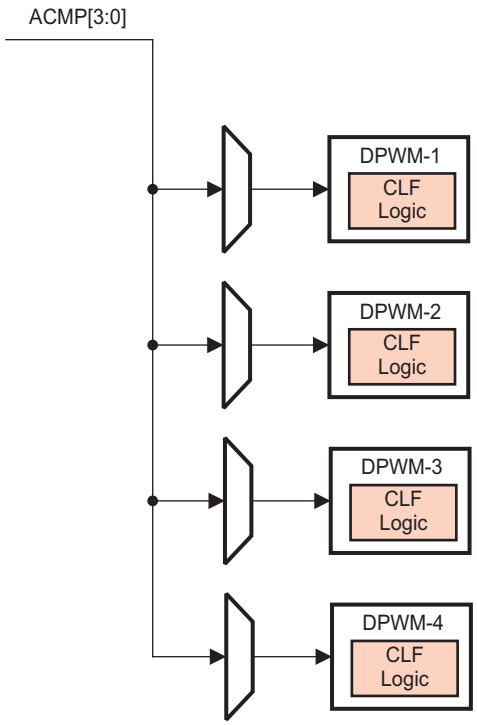

Figure 23. Analog Comparator Usage

The four analog comparator outputs are routed through a multiplexer for routing one of the comparator outputs to the current-limit flag (CLF) input of a DPWM. Each DPWM CLF input source from the multiplexer can be programmed by the CPU.

Internal Temperature Sensor

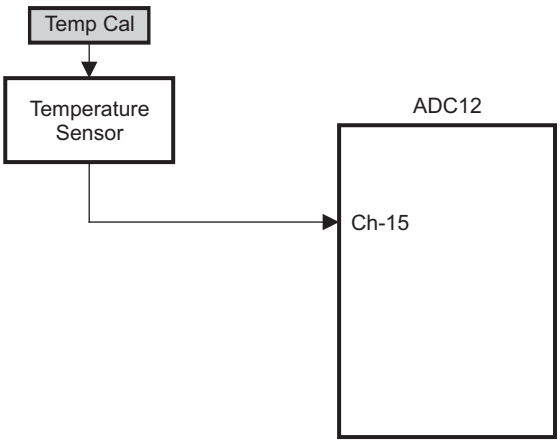

Figure 24. Internal Temperature Sensor

The temperature sensor is calibrated at room temperature (25°C) via a calibration register value.

The temperature sensor output is measured using an internal channel (Ch15) of the 12-bit ADC (ADC12). This temperature sensing is internal for all UCD30xx devices. The sensed temperature is then calculated using a mathematical formula involving the calibration register (this effectively adds an offset to the ADC measurement). Thus, the temperature sensor output voltage, at any temperature T, is calculated from:

$V(T) = 1.717 + [T – 25] \times 5.93 \times 10^{-3} + V_{offset}$, where T is in °C.

Copyright © 2009–2010, Texas Instruments Incorporated

DELTA ELECTRONICS EX. 1018
Page 54

The temperature sensor can be enabled or disabled.

Table 9. Temperature Sensor Limits

V_{TEMP}	Voltage range of sensor	1.347 V to 2.326 V
Voltage resolution	Volts/°C.	5.93 mV/°C
Temperature resolution	Degree C per bit	0.7°C / bit
Accuracy		±5°C
Temp range	–40°C to 125°C	–40°C to 125°C
I_{TEMP}	Current draw of sensor when active	30 μA
t_{ON}	Turn-on time/settling time of sensor	100 μs
Vroom temp	Trimmed 25°C reading	1.717 V

Internal Voltage Regulators

The internal 1.8-V regulator requires an external capacitor on the BPCAP pin of the device. The value of this capacitor ranges from 1 μF to 4.7 μF.

APPLICATION INFORMATION

TYPICAL APPLICATION SCHEMATICS

Example 1: Secondary-Referenced Interleaved Two-Transistor Forward

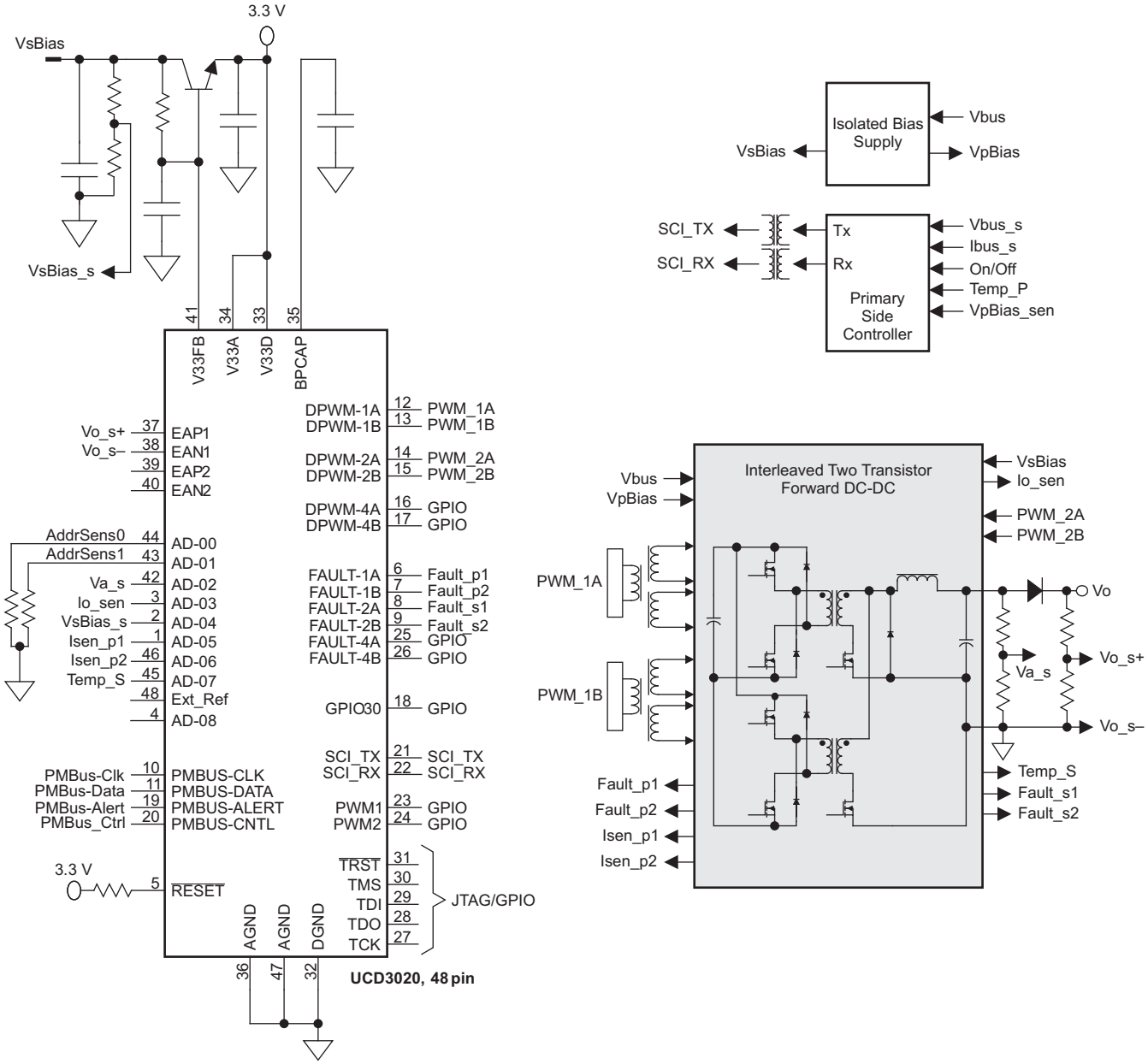

Copyright © 2009–2010, Texas Instruments Incorporated

DELTA ELECTRONICS EX. 1018
Page 56

Example 2: Secondary-Referenced Interleaved Two-Transistor Forward With Synchronous Rectification

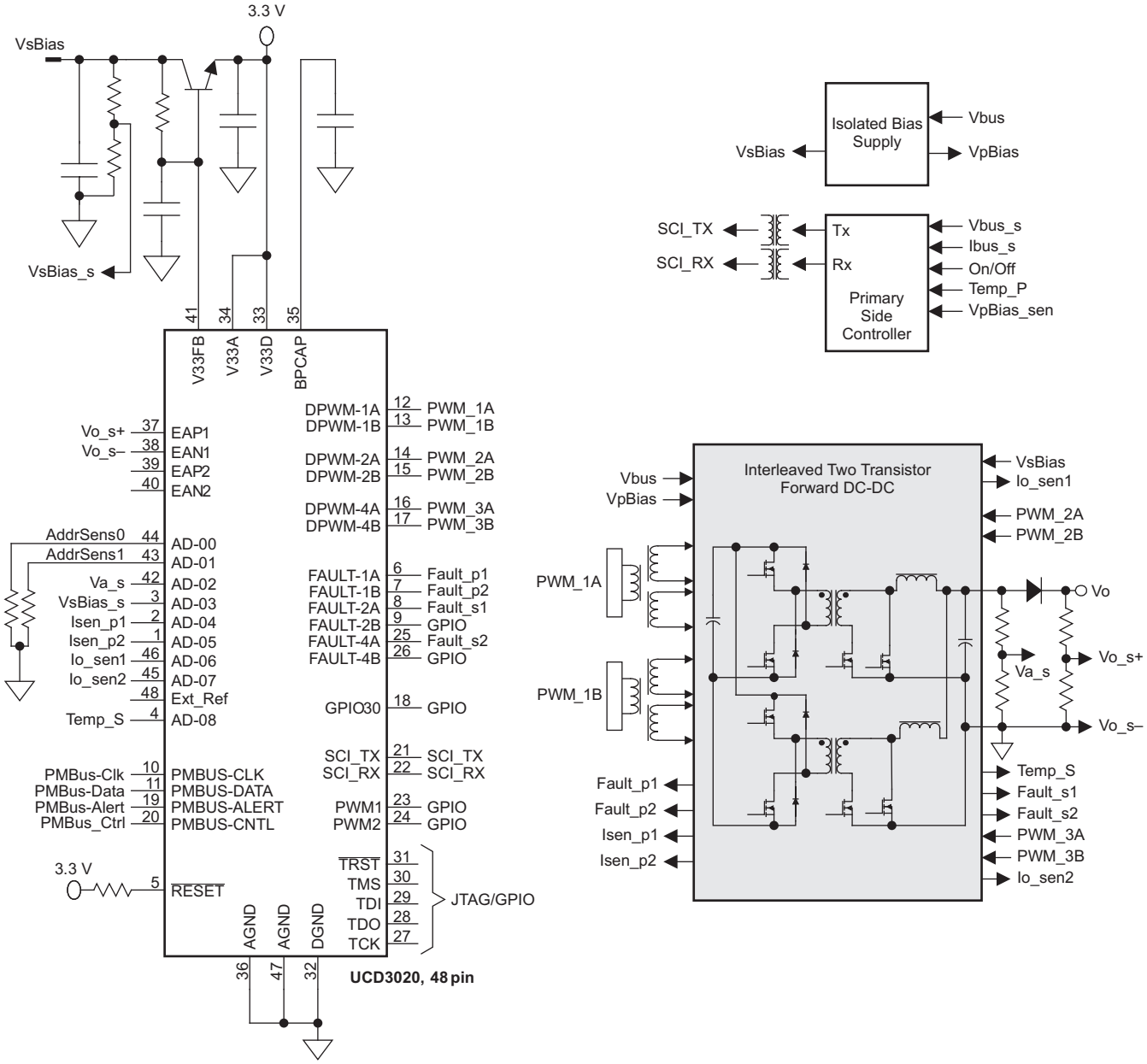

Example 3: Secondary-Referenced Phase-Shifted Full Bridge With Synchronous Rectification

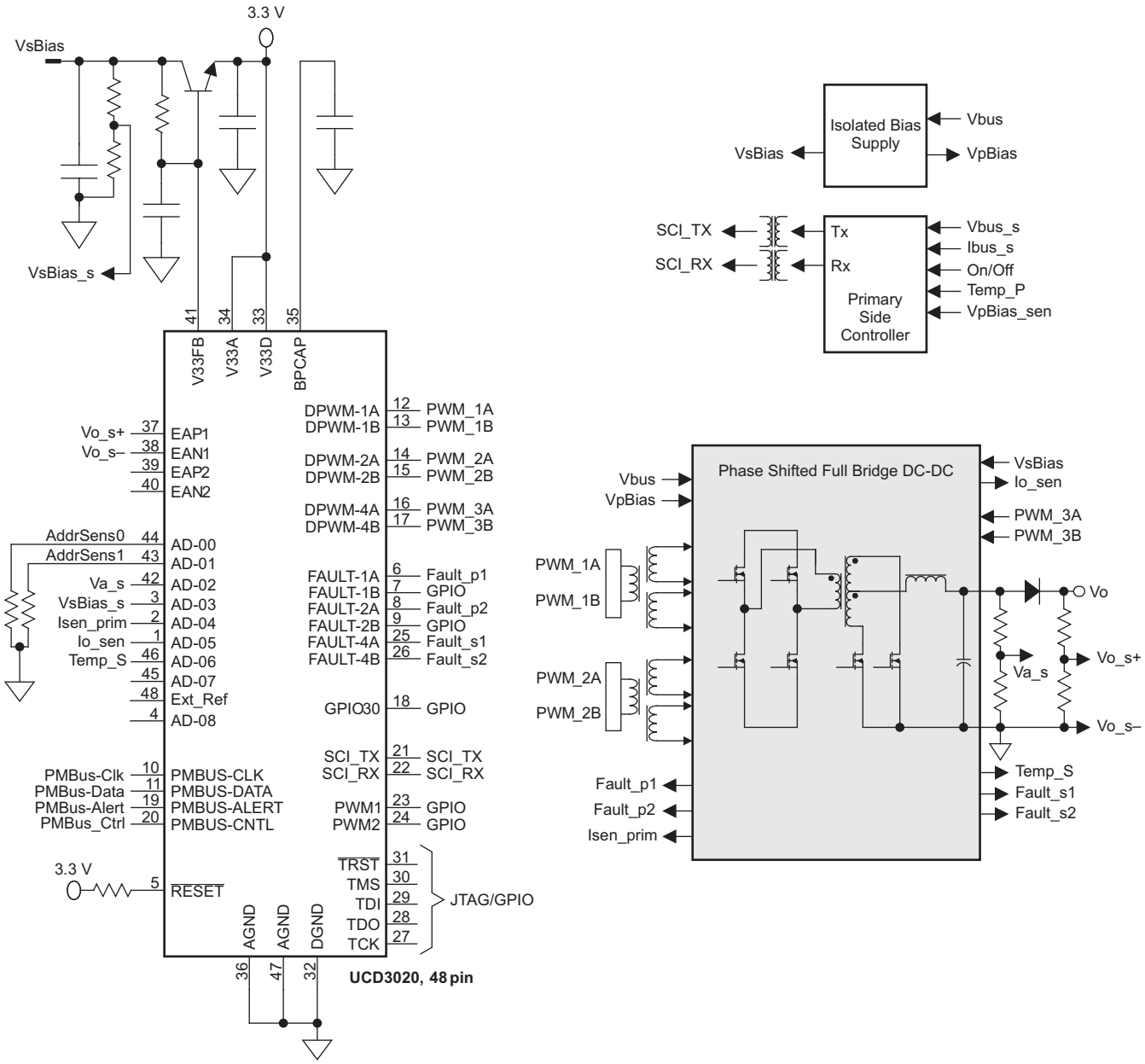

Copyright © 2009–2010, Texas Instruments Incorporated

DELTA ELECTRONICS EX. 1018
Page 58

Example 4: Primary-Side Two-Phase Interleaved Power-Factor Correction Control

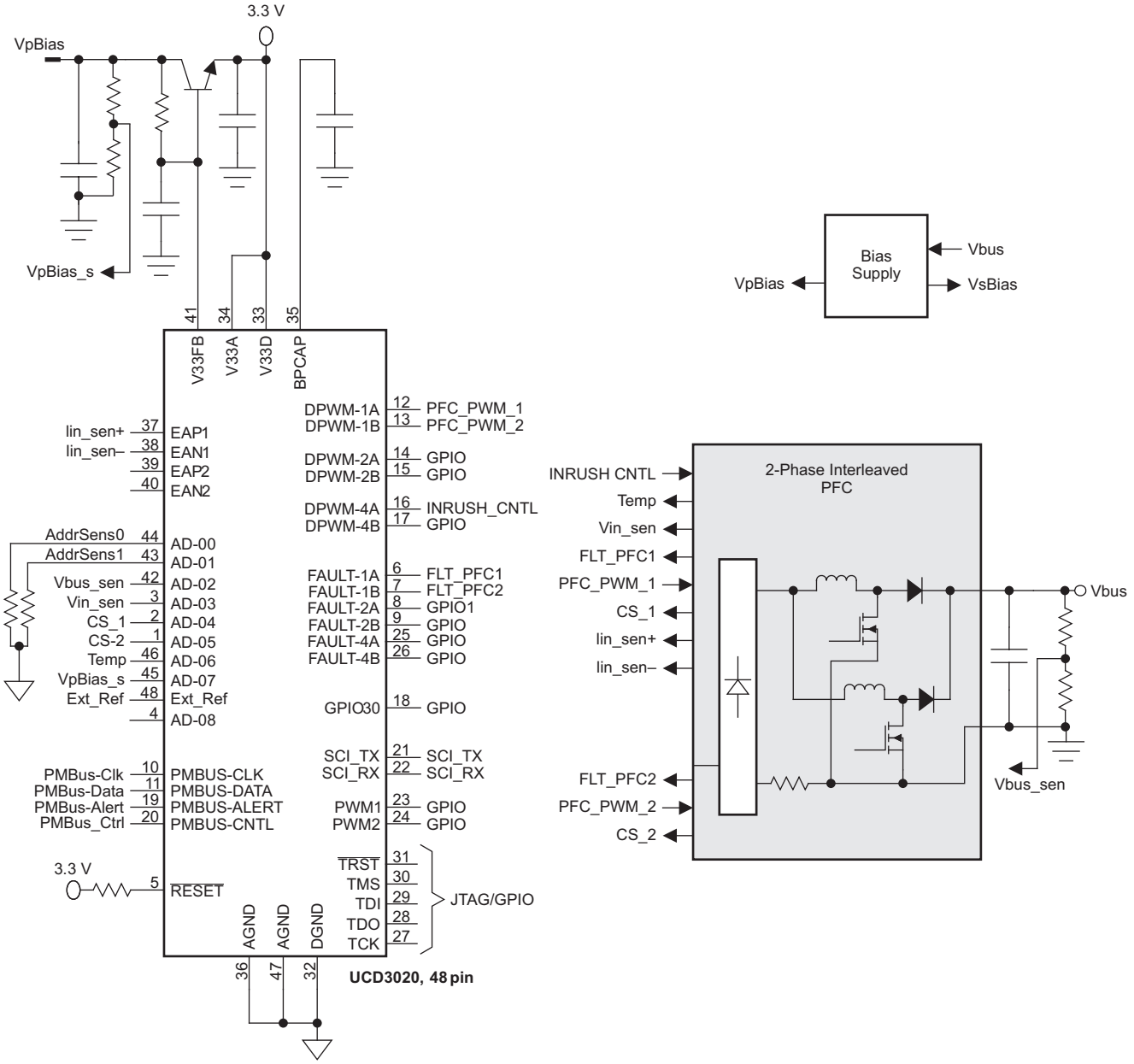

Example 5: AC/DC Power System Block Diagram

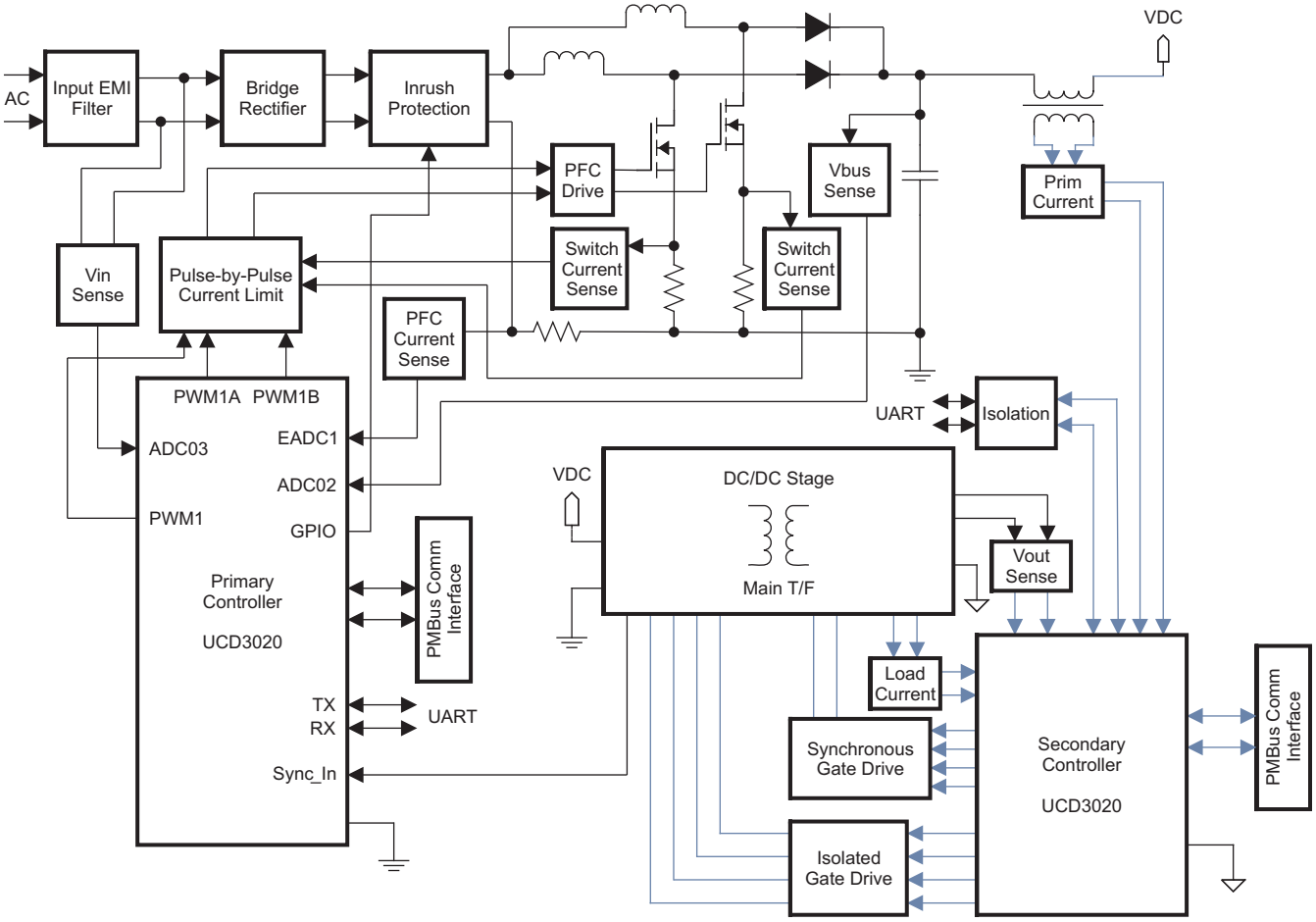

Example 6: Nonisolated Multiphase DC/DC Converter Control (UCD3040, 64-Pin)

The application diagram for Example 6 shows the UCD3040 power-supply controller working in a system which requires the regulation of four independent power supplies. The first and second outputs have a 2-phase configuration while the third and fourth have single-phase configuration. The loop for each power supply is created by the voltage outputs feeding into the error ADC differential inputs, and completed by DPWM outputs feeding into separate power modules.

Copyright © 2009–2010, Texas Instruments Incorporated

DELTA ELECTRONICS EX. 1018
Page 60

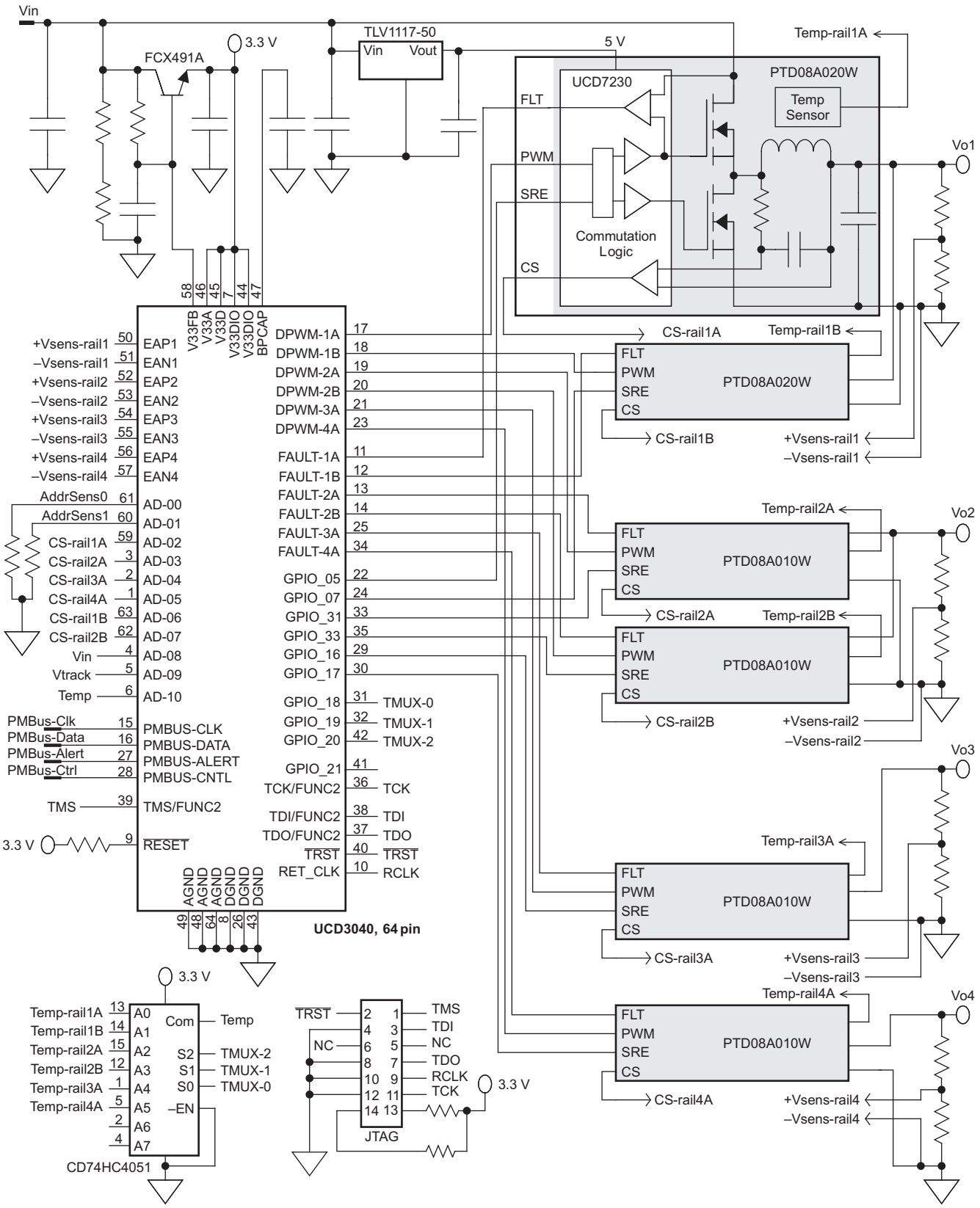
Vin
3.3 V
FCX491A
TLV1117-50
Vin
Vout
5 V
Temp-rail1A
UCD7230
PTD08A020W
Temp Sensor
FLT
PWM
SRE
CS
Commutation Logic
Vo1
58 46 45 7 44 47
V33FB V33A V33D V33DIO V33DIO BPCAP
+Vsens-rail1 50 EAP1
–Vsens-rail1 51 EAN1
+Vsens-rail2 52 EAP2
–Vsens-rail2 53 EAN2
+Vsens-rail3 54 EAP3
–Vsens-rail3 55 EAN3
+Vsens-rail4 56 EAP4
–Vsens-rail4 57 EAN4
AddrSens0 61 AD-00
AddrSens1 60 AD-01
CS-rail1A 59 AD-02
CS-rail2A 3 AD-03
CS-rail3A 2 AD-04
CS-rail4A 1 AD-05
CS-rail1B 63 AD-06
CS-rail2B 62 AD-07
Vin 4 AD-08
Vtrack 5 AD-09
Temp 6 AD-10
PMBus-Clk 15 PMBUS-CLK
PMBus-Data 16 PMBUS-DATA
PMBus-Alert 27 PMBUS-ALERT
PMBus-Ctrl 28 PMBUS-CNTL
TMS 39 TMS/FUNC2
3.3 V 9 RESET
DPWM-1A 17
DPWM-1B 18
DPWM-2A 19
DPWM-2B 20
DPWM-3A 21
DPWM-4A 23
FAULT-1A 11
FAULT-1B 12
FAULT-2A 13
FAULT-2B 14
FAULT-3A 25
FAULT-4A 34
GPIO_05 22
GPIO_07 24
GPIO_31 33
GPIO_33 35
GPIO_16 29
GPIO_17 30
GPIO_18 31 TMUX-0
GPIO_19 32 TMUX-1
GPIO_20 42 TMUX-2
GPIO_21 41
TCK/FUNC2 36 TCK
TDI/FUNC2 38 TDI
TDO/FUNC2 37 TDO
TRST 40 TRST
RET_CLK 10 RCLK
AGND AGND AGND DGND DGND DGND
49 48 64 8 26 43
UCD3040, 64 pin
CS-rail1A
Temp-rail1B
FLT
PWM
SRE
CS
PTD08A020W
CS-rail1B
+Vsens-rail1
–Vsens-rail1
Temp-rail2A
Vo2
PTD08A010W
CS-rail2A
Temp-rail2B
CS-rail2B
+Vsens-rail2
–Vsens-rail2
Vo3
Temp-rail3A
CS-rail3A
+Vsens-rail3
–Vsens-rail3
Temp-rail4A
Vo4
CS-rail4A
+Vsens-rail4
–Vsens-rail4
3.3 V
Temp-rail1A 13 A0
Temp-rail1B 14 A1
Temp-rail2A 15 A2
Temp-rail2B 12 A3
Temp-rail3A 1 A4
Temp-rail4A 5 A5
2 A6
4 A7
Com Temp
S2 TMUX-2
S1 TMUX-1
S0 TMUX-0
–EN
CD74HC4051
TRST
NC
2 1 TMS
4 3 TDI
6 5 NC
8 7 TDO
10 9 RCLK
12 11 TCK
14 13
JTAG
3.3 V

REFERENCE MANUALS

In this section a list of other supporting manuals for the UCD30xx controllers is provided. Contact your local TI representative for a copy of these manuals.

UCD30xx Programmer's Manuals

1. UCD30xx Memory Controller (MMC) Programmer's Manual
2. UCD30xx Central Interrupt Module (CIM) Programmer's Manual
3. UCD30xx System Module (SYS) Programmer's Manual
4. UCD30xx Memory Address Manager (DEC) Programmer's Manual
5. UCD30xx Fusion Digital Power Peripherals Programmer's Manual
6. UCD30xx General-Purpose 12-Bit ADC (ADC12) Programmer's Manual
7. UCD30xx PMBus Interface Programmer's Manual
8. UCD30xx UART Module Programmer's Manual
9. UCD30xx SPI Module Programmer's Manual
10. UCD30xx Miscellaneous Analog Control (MAC) Programmer's Manual
11. UCD30xx Timer Modules Programmer's Manual
12. UCD30xx Faults and External Interrupts (GIO) Programmer's Manual
13. UCD30xx General Purpose I/O (GPIO) Programmer's Manual
14. UCD30xx Boot ROM Reference Manual

Copyright © 2009–2010, Texas Instruments Incorporated

DELTA ELECTRONICS EX. 1018
Page 62

IMPORTANT NOTICE

Texas Instruments Incorporated and its subsidiaries (TI) reserve the right to make corrections, modifications, enhancements, improvements, and other changes to its products and services at any time and to discontinue any product or service without notice. Customers should obtain the latest relevant information before placing orders and should verify that such information is current and complete. All products are sold subject to TI's terms and conditions of sale supplied at the time of order acknowledgment.

TI warrants performance of its hardware products to the specifications applicable at the time of sale in accordance with TI's standard warranty. Testing and other quality control techniques are used to the extent TI deems necessary to support this warranty. Except where mandated by government requirements, testing of all parameters of each product is not necessarily performed.

TI assumes no liability for applications assistance or customer product design. Customers are responsible for their products and applications using TI components. To minimize the risks associated with customer products and applications, customers should provide adequate design and operating safeguards.

TI does not warrant or represent that any license, either express or implied, is granted under any TI patent right, copyright, mask work right, or other TI intellectual property right relating to any combination, machine, or process in which TI products or services are used. Information published by TI regarding third-party products or services does not constitute a license from TI to use such products or services or a warranty or endorsement thereof. Use of such information may require a license from a third party under the patents or other intellectual property of the third party, or a license from TI under the patents or other intellectual property of TI.

Reproduction of TI information in TI data books or data sheets is permissible only if reproduction is without alteration and is accompanied by all associated warranties, conditions, limitations, and notices. Reproduction of this information with alteration is an unfair and deceptive business practice. TI is not responsible or liable for such altered documentation. Information of third parties may be subject to additional restrictions.

Resale of TI products or services with statements different from or beyond the parameters stated by TI for that product or service voids all express and any implied warranties for the associated TI product or service and is an unfair and deceptive business practice. TI is not responsible or liable for any such statements.

TI products are not authorized for use in safety-critical applications (such as life support) where a failure of the TI product would reasonably be expected to cause severe personal injury or death, unless officers of the parties have executed an agreement specifically governing such use. Buyers represent that they have all necessary expertise in the safety and regulatory ramifications of their applications, and acknowledge and agree that they are solely responsible for all legal, regulatory and safety-related requirements concerning their products and any use of TI products in such safety-critical applications, notwithstanding any applications-related information or support that may be provided by TI. Further, Buyers must fully indemnify TI and its representatives against any damages arising out of the use of TI products in such safety-critical applications.

TI products are neither designed nor intended for use in military/aerospace applications or environments unless the TI products are specifically designated by TI as military-grade or "enhanced plastic." Only products designated by TI as military-grade meet military specifications. Buyers acknowledge and agree that any such use of TI products which TI has not designated as military-grade is solely at the Buyer's risk, and that they are solely responsible for compliance with all legal and regulatory requirements in connection with such use.

TI products are neither designed nor intended for use in automotive applications or environments unless the specific TI products are designated by TI as compliant with ISO/TS 16949 requirements. Buyers acknowledge and agree that, if they use any non-designated products in automotive applications, TI will not be responsible for any failure to meet such requirements.

Following are URLs where you can obtain information on other Texas Instruments products and application solutions:

Products		**Applications**	
Amplifiers	amplifier.ti.com	Audio	www.ti.com/audio
Data Converters	dataconverter.ti.com	Automotive	www.ti.com/automotive
DLP® Products	www.dlp.com	Communications and Telecom	www.ti.com/communications
DSP	dsp.ti.com	Computers and Peripherals	www.ti.com/computers
Clocks and Timers	www.ti.com/clocks	Consumer Electronics	www.ti.com/consumer-apps
Interface	interface.ti.com	Energy	www.ti.com/energy
Logic	logic.ti.com	Industrial	www.ti.com/industrial
Power Mgmt	power.ti.com	Medical	www.ti.com/medical
Microcontrollers	microcontroller.ti.com	Security	www.ti.com/security
RFID	www.ti-rfid.com	Space, Avionics & Defense	www.ti.com/space-avionics-defense
RF/IF and ZigBee® Solutions	www.ti.com/lprf	Video and Imaging	www.ti.com/video
		Wireless	www.ti.com/wireless-apps

Mailing Address: Texas Instruments, Post Office Box 655303, Dallas, Texas 75265
Copyright © 2010, Texas Instruments Incorporated