Trials@uspto.gov
571-272-7822

Paper 10
Date: May 17, 2024

UNITED STATES PATENT AND TRADEMARK OFFICE

BEFORE THE PATENT TRIAL AND APPEAL BOARD

DELTA ELECTRONICS, INC.,
Petitioner,

v.

VICOR CORPORATION,
Patent Owner.

IPR2024-00187
Patent 9,166,481 B1

Before GEORGIANNA W. BRADEN, KARA L. SZPONDOWSKI, and SEAN P. O'HANLON, *Administrative Patent Judges.*

SZPONDOWSKI, *Administrative Patent Judge*.

DECISION
Denying Institution of *Inter Partes* Review
35 U.S.C. § 314
Granting Patent Owner's Motion to Seal and
Entry of Stipulated Protective Order
37 C.F.R. §§ 42.5, 42.14, 42.54

I. INTRODUCTION

Delta Electronics, Inc. ("Petitioner") filed a Petition (Paper 2, "Pet.") requesting institution of an *inter partes* review of claims 1, 22, and 31–35 of U.S. Patent No. 9,166,481 B1, issued on October 20, 2015 (Ex. 1001, "the '481 patent"). Vicor Corporation ("Patent Owner") filed a Preliminary Response (Paper 7, "Prelim. Resp.").

Institution of an *inter partes* review is authorized when "the information presented in the petition . . . and any response . . . shows that there is a reasonable likelihood that the petitioner would prevail with respect to at least 1 of the claims challenged in the petition." 35 U.S.C. § 314(a). Based on the current record, and for the reasons explained below, we determine that Petitioner has not established a reasonable likelihood that it would prevail with respect to at least one challenged claim, and we do not institute an *inter partes* review.

II. BACKGROUND

A. *Real Parties-in-Interest*

Petitioner identifies Delta Electronics, Inc., Delta Electronics (Americas), Ltd., Delta Electronics (USA), Inc., Cyntec Co., Ltd., Delta Electronics (Thailand) Public Company Limited, and DET Logistics (USA) Corporation as the real parties-in-interest. Pet. 126. In addition, Petitioner states that the following entities are not real parties-in-interest, but Petitioner is disclosing them for purposes of transparency: Hon Hai Precision Industry Co. Ltd., Foxconn Industrial Internet Co. Ltd., FII USA Inc., Ingrasys Technology Inc., Ingrasys Technology USA Inc., Quanta Computer, Inc., Quanta Computer USA Inc., Quanta Cloud Technology, Inc., Quanta Cloud Technology USA, LLC, and QCH, Inc. *Id.* at 126 n.10.

Patent Owner identifies itself as the real party-in-interest. Paper 5, 1 (Mandatory Notices of Patent Owner).

B. *Related Matters*

Petitioner and Patent Owner identify as related matters *Vicor Corp. v. Delta Electronics, Inc. et al.*, Case No. 2-23-cv-00323 (E.D. Tex.) and *Certain Power Converter Modules and Computing Systems Containing the Same*, Inv. No. 337-TA-1370 (ITC). Pet. 126–127; Paper 5, 1. Petitioner states that the Texas district court proceeding has been stayed. Pet. 127.

C. *The '481 Patent (Ex. 1001)*

The '481 patent is titled "Digital Control of Resonant Power Converters" and is generally related to "digital control of resonant zero-current and zero-voltage switching resonant power converters." Ex. 1001, code (54), 1:8–9. The '481 patent describes that, in a conventional system, "control of a SAC [Sine-Amplitude Converter] requires that the circuit conditions be monitored in order to determine the proper times at which to turn switches ON and OFF." *Id.* at 1:60–62; *see id.* at Fig. 1. "For example, the voltage across one or more of the switches may be monitored to establish the timing of a zero-voltage switching ('ZVS') or zero-current switching ('ZCS') event, or the current flowing in the transformer 80 may be monitored to establish the timing of a ZCS event." *Id.* at 1:66–2:3.[1] The '481 patent seeks to, among other things, eliminate the need for feedback circuits and improve efficiency through anticipation of event timing. *Id.* at 7:29–35.

[1] Further discussion of the prior art embodiment described in the '481 patent is provided below in Section III.E.2 ("AAPA").

Figure 2, reproduced below, shows a block diagram of a Digital Sine-Amplitude Converter.

Fig. 2

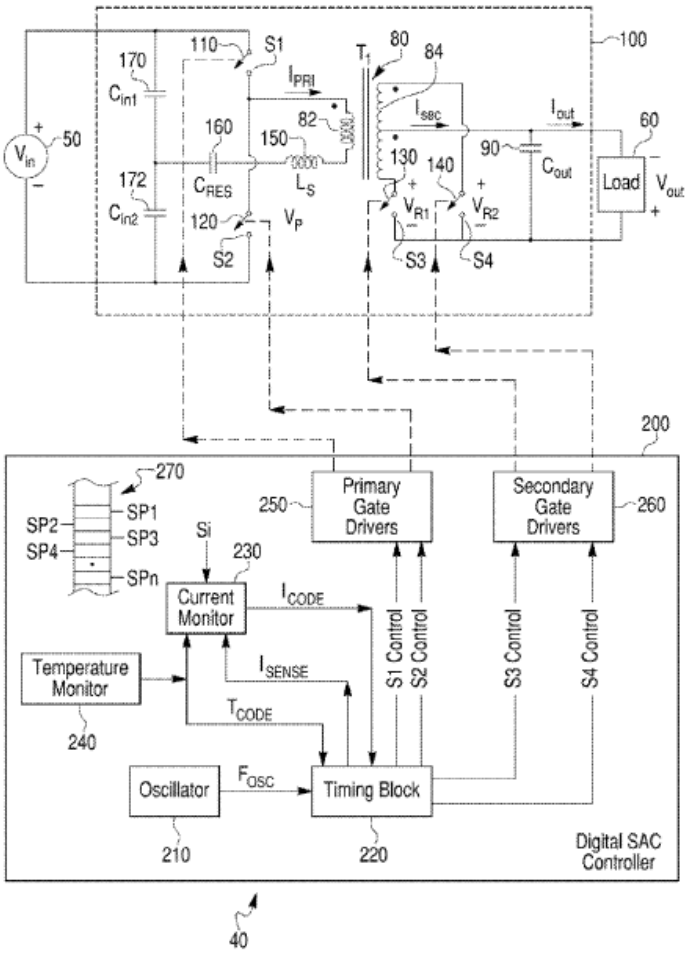

Figure 2 shows power conversion circuitry 100 (connected to power source 50 and load 60) and digital SAC controller ("DSAC") 200. Ex. 1001, 1:22–25, 4:31–32.

Power conversion circuitry 100 includes a primary circuit, transformer 80, and a secondary circuit. Ex. 1001, 4:31–48. Primary circuit includes switches S1 110 and S2 120, bridge storage capacitors 170 and 172,

resonant inductance Ls 150 and resonant capacitance C_{res} 160. *Id.* at 4:35–38. Secondary circuit includes switches S3 130 and S4 140 and output storage capacitor 90. *Id.* at 4:46–48.

Digital SAC controller 200 controls the turning ON and OFF of the switches within power conversion circuitry 100. Ex. 1001, 1:24–25. DSAC 200 "includes an oscillator 210 for generating a series of timing pulses at a frequency, F_{OSC}; a timing block 220 for generating one or more control signals or event outputs; and current monitoring circuitry 230." *Id.* at 4:51–54. "The beginning and end of a converter operating cycle, the beginning and end of each power transfer interval, and the points during each operating cycle at which switches are turned ON and OFF may be controlled by the DSC 200 based upon pre-defined timing parameters" that "may be pre-programmed into the DSC as circuitry . . . or stored as parameters." *Id.* at 4:61–67. "Each event may be set independently of the other events and the timing signals for controlling various aspects of the converter may also be set independently of the other timing signals and events." *Id.* at 5:41–44. "By using pre-determined set-points for initiating switching and other events during an operating cycle, the need for feedback circuits, such as those required to establish the end of a power transfer interval or ZVS period are eliminated, thereby simplifying circuit design." *Id.* at 7:29–33. "Furthermore, using predetermined set-points may improve efficiency through anticipation of event timing." *Id.* at 7:33–35.

D. *Illustrative Claim*

Among the challenged claims, claim 1 is independent. Independent claim 1, reproduced below with Petitioner's identifiers in bold, is illustrative of the claimed subject matter:

> 1. **1[a]** A method of synchronously operating a power converter in a series of converter operating cycles, the converter having at least one primary switch to drive a resonant power train and at least one secondary switch, the resonant power train including a transformer and having a characteristic resonant frequency and period, the method comprising:
>
> **1[b]** providing an oscillator for generating clock signals at an oscillator frequency;
>
> **1[c]** generating timing control signals for each of a plurality of events based upon the clock signals in a (A) standard converter operating cycle, having a standard operating period and frequency, to:
>
> **1[d]** (i) turn the at least one primary switch ON and OFF at times when essentially zero voltage is impressed across the respective at least one primary switch and essentially zero resonant current is flowing in the respective at least one primary switch; and
>
> **1[e]** (ii) turn the at least one secondary switch ON and OFF at times when essentially zero current is flowing in the respective at least one secondary switch and essentially zero voltage is impressed across the respective at least one secondary switch; and
>
> **1[f]** wherein the oscillator frequency is preset, and **1[g]** the timing of the timing control signals for one or more selected events may be set independently of other timing control signals and events.

Ex. 1001, 20:42–67.

E. *Prior Art and Asserted Challenges to Patentability*

Petitioner asserts that claims 1, 22, and 31–35 are unpatentable based on the following challenges (Pet. 7):

Claims Challenged	35 U.S.C. §[2]	References/Basis
1, 22, 31–35	103	McDonald,[3] TI UCD3138[4]
1, 22	103	Shimada,[5] AAPA[6]
1, 22	103	Chen,[7] AAPA

[2] Because the '481 patent issued from a patent application that was filed before March 16, 2013 (Ex. 1001, code (22)), patentability is governed by the version of 35 U.S.C. § 103 preceding the Leahy-Smith America Invents Act ("AIA"), Pub L. No. 112–29, 125 Stat. 284 (2011).

[3] Brent McDonald & Dave Freeman, *Design and Optimization of a High-Performance LLC Converter*, Power Supply Design Seminar, Texas Instruments Inc. (2012) ("McDonald," Ex. 1005). Petitioner contends that McDonald is prior art to the '481 patent under 35 U.S.C. § 102(a). Pet. 5.

[4] *UCD3138 Highly Integrated Digital Controller for Isolated Power*, Data Manual, Texas Instruments Inc. (2012) ("TI UCD3138," Ex. 1006). Petitioner contends that UCD3138 is prior art to the '481 patent under 35 U.S.C. § 102(a). Pet. 5.

[5] Shimada, JP 2012-34522, published Feb. 16, 2012 ("Shimada," Exs. 1007, 1008 (translation)). Petitioner contends that Shimada is prior art to the '481 patent under 35 U.S.C. § 102(b). Pet. 5.

[6] Petitioner contends that the '481 patent "discloses numerous instances of Applicant Admitted Prior Art ('AAPA') related to zero voltage and zero current switching." Pet. 6 (citing Exs. 1001, 1009); *see* Section III.E.2 below (describing AAPA).

[7] Chen et al., US 8,243,473 B2, issued Aug. 14, 2012 ("Chen," Ex. 1010). Petitioner contends that Chen is prior art to the '481 patent under 35 U.S.C. § 102(e). Pet. 5.

Claims Challenged	35 U.S.C. §[2]	References/Basis
1, 22, 31–35	103	Pan,[8] TI UCD3138 or TI UCD3040,[9] AAPA
1, 22, 31–35	103	Peng,[10] TI UCD3138 or TI UCD3040, AAPA
1, 22	103	Leung,[11] AAPA
1, 22	103	AN1336,[12] dsPIC33FJ06GS101,[13] AAPA

In support of its proposed challenges, Petitioner relies on the Declaration of Dr. Douglas Hopkins. *See* Ex. 1003. In support of its Preliminary Response, Patent Owner relies on, *inter alia*, the Declaration of

[8] S. Pan & P. K. Jain, *Secondary-side Adaptive Digital Controlled Series Resonant DC-DC Converters for Low Voltage High Current Applications*, IEEE 2008 ("Pan," Ex. 1011). Petitioner contends that Pan is prior art to the '481 patent under 35 U.S.C. § 102(b). Pet. 5.

[9] *Digital Power Controllers, UCD3040 UCD3028 UCD3020*, Texas Instruments Inc. (2010) ("TI UCD3040," Ex. 1018). Petitioner contends that UCD3040 is prior art to the '481 patent under 35 U.S.C. § 102(b). Pet. 6.

[10] Peng et al., US 6,370,050 B1, issued Apr. 9, 2002 ("Peng," Ex. 1012). Petitioner contends that Peng is prior art to the '481 patent under 35 U.S.C. § 102(b). Pet. 5.

[11] Leung et al., US 2006/0220938 A1, published Oct. 5, 2006 ("Leung," Ex. 1013). Petitioner contends that Leung is prior art to the '481 patent under 35 U.S.C. § 102(b). Pet. 6.

[12] Bersani et al., *AN1336 DC/DC LLC Reference Design Using the dsPIC DSC*, Microchip Tech. Inc. (2010) ("AN1336," Ex. 1019). Petitioner contends that AN1336 is prior art to the '481 patent under 35 U.S.C. § 102(b). Pet. 6.

[13] *dsPIC33FJ06GS101/X02 and dsPIC33FJ16GSX02/X04 16-bit Digital Signal Controllers (up to 16 KB Flash and up to 2 KB SRAM) with High-Speed PWM, ADC, and Comparators*, Microchip Tech. Inc. (2012) ("dsPIC33FJ06GS101," Ex. 1020). Petitioner contends that dsPIC33FJ06GS101 is prior art to the '481 patent under 35 U.S.C. § 102(b). Pet. 6.

Juan Rivas-Davila, Ph.D. (Ex. 2001) and the Declaration of Patrizio Vinciarelli, Ph.D. (Ex. 2030).

III. ANALYSIS

A. *Legal Standards*

A patent claim is unpatentable under 35 U.S.C. § 103(a) if the differences between the claimed subject matter and the prior art are such that the subject matter, as a whole, "would have been obvious at the time the invention was made to a person having ordinary skill in the art to which said subject matter pertains." *KSR Int'l Co. v. Teleflex Inc.*, 550 U.S. 398, 406 (2007). The question of obviousness is resolved on the basis of underlying factual determinations, including (1) the scope and content of the prior art; (2) any differences between the claimed subject matter and the prior art; (3) the level of skill in the art; and (4) when in evidence, objective evidence of nonobviousness, i.e., secondary considerations.[14] *See Graham v. John Deere Co.*, 383 U.S. 1, 17–18 (1966).

A patent claim "is not proved obvious merely by demonstrating that each of its elements was, independently, known in the prior art." *KSR*, 550 U.S. at 418. An obviousness determination based on a combination of references requires finding "both 'that a skilled artisan would have been motivated to combine the teachings of the prior art references to achieve the claimed invention, and that the skilled artisan would have had a reasonable expectation of success in doing so.'" *Intelligent Bio-Sys., Inc. v. Illumina*

[14] Patent Owner presents arguments for objective indicia of non-obviousness. Prelim. Resp. 88–94. Because we determine that the Petition is deficient for other reasons as set forth herein, we do not address these arguments.

Cambridge Ltd., 821 F.3d 1359, 1367–68 (Fed. Cir. 2016) (citation omitted); *see KSR*, 550 U.S. at 418. Furthermore, an assertion of obviousness "cannot be sustained by mere conclusory statements; instead, there must be some articulated reasoning with some rational underpinning to support the legal conclusion of obviousness." *KSR*, 550 U.S. at 418; *In re NuVasive, Inc.*, 842 F.3d 1376, 1383 (Fed. Cir. 2016) (a finding of a motivation to combine "must be supported by a 'reasoned explanation'" (citation omitted)).

"In an [*inter partes* review], the petitioner has the burden from the onset to show with particularity why the patent it challenges is unpatentable." *Harmonic Inc. v. Avid Tech., Inc.*, 815 F.3d 1356, 1363 (Fed. Cir. 2016) (citing 35 U.S.C. § 312(a)(3)); *see also Intelligent Bio-Sys.*, 821 F.3d at 1369. This burden of persuasion never shifts to Patent Owner. *See Dynamic Drinkware, LLC v. Nat'l Graphics, Inc.*, 800 F.3d 1375, 1378 (Fed. Cir. 2015) (discussing the burden of proof in *inter partes* review). Therefore, to prevail in an *inter partes* review, Petitioner must explain how the proposed combination of prior art would have rendered the challenged claims unpatentable. At this preliminary stage, we determine whether the information presented in the Petition shows there is a reasonable likelihood that Petitioner would prevail in establishing that at least one of the challenged claims would have been obvious over the proposed combinations of prior art.

B. *Level of Ordinary Skill in the Art*

Petitioner contends a person of ordinary skill in the art "would have at least a Master's degree in electrical engineering and two or more years of work experience relating to power electronics and the design and control of

switching power converters, with more experience potentially substituting for education, or vice-versa." Pet. 14 (citing Ex. 1017, 79; Ex. 1003 ¶ 29).

Patent Owner does not assert a different level of skill in the art at this time. *See generally* Prelim. Resp. Additionally, Dr. Rivas-Davila applies Petitioner's definition in his declaration. Ex. 2001 ¶ 64.

We find Petitioner's proposal is consistent with the level of ordinary skill in the art reflected by the prior art of record, and, therefore, adopt Petitioner's proposed level of ordinary skill in the art for purposes of this Decision. *See Okajima v. Bourdeau*, 261 F.3d 1350, 1355 (Fed. Cir. 2001).

C. *Claim Construction*

Petitioner contends that "all terms should be given their plain and ordinary meaning." Pet. 7. Patent Owner contends that the preamble of claim 1 is limiting. Prelim. Resp. 22–24.

Only terms that are in controversy need to be construed, and then only to the extent necessary to determine whether to institute *inter partes* review. *See Realtime Data, LLC v. Iancu*, 912 F.3d 1368, 1375 (Fed. Cir. 2019) ("The Board is required to construe 'only those terms . . . that are in controversy, and only to the extent necessary to resolve the controversy.'" (quoting *Vivid Techs., Inc. v. Am. Sci. & Eng'g, Inc.*, 200 F.3d 795, 803 (Fed. Cir. 1999))). After reviewing the parties' arguments and evidence, we determine that we do not need to expressly construe any term, or decide whether the preamble of claim 1 is limiting, for purposes of this Decision.

D. *Alleged Obviousness Over McDonald and TI UCD3138*

Petitioner contends claims 1, 22, and 31–35 would have been obvious over the combination of McDonald and TI UCD3138. Pet. 27–50. Having considered the arguments and evidence before us, we are not persuaded that

Petitioner has established a reasonable likelihood that it would prevail with respect to at least one challenged claim in this ground.

1. McDonald (Ex. 1005)

McDonald is titled "Design and Optimization of a High-Performance LLC Converter" and is directed generally to "how to optimize the design of a resonant DC/DC converter using two inductors, LL, and a capacitor, C, known as an LLC converter." Ex. 1005, 5–2[15] (emphasis omitted). McDonald discloses the design of a resonant DC/DC converter. *Id.* Figure 1, which shows a basic LLC schematic, is reproduced below:

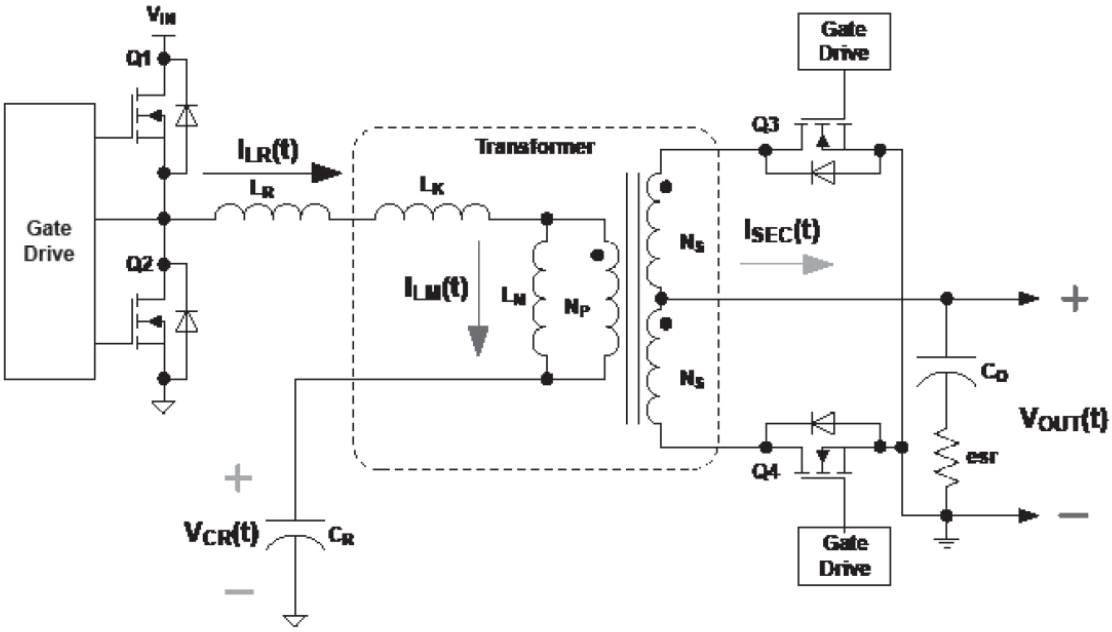

Figure 1 – Basic LLC schematic.

Figure 1 is a circuit diagram illustrating a basic LLC schematic and shows, among other things, two primary side switches (Q1 and Q2), two inductors

[15] Like the Parties, we cite to McDonald's original pagination rather than to the pagination added by Petitioner.

(L_R and L_M) and a capacitor (C_R) on the primary side, a transformer, two secondary side switches (Q3 and Q4), and gate drive circuitry. *Id.* at 5–3.

Figure 2, reproduced below, "illustrates how this system achieves zero voltage-switching (ZVS) on Q1 and Q2." Ex. 1005, 5–3.

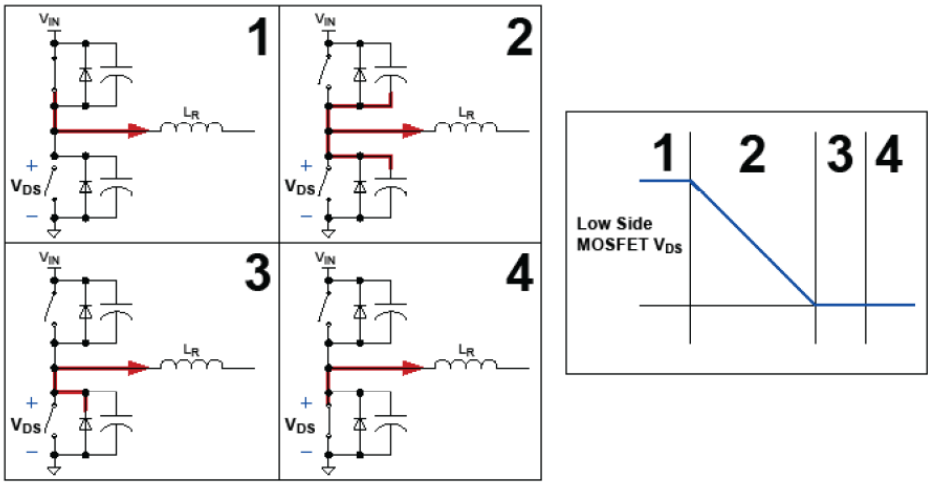

Figure 2 – Zero voltage switching.

Figure 2 is a circuit diagram and described as follows:

> State 1 shows that the V_{DS} of Q2 is charged all the way to V_{IN}, with the inductor current flowing through the channel of Q1. When Q1 turns off, the current that was flowing through Q1's channel diverts and flows through the two capacitors, as shown in state 2. This state continues until the V_{DS} of Q2 has dropped low enough to forward-bias the diode across Q2. At this point operation transitions to state 3. Now the system is free to turn on Q2 with a near zero voltage, thus achieving the so-called ZVS, as shown in state 4.

Id. Figure 3, reproduced below, shows "the operation at the boundary between two of the most common operating modes of the converter." *Id.* at 5–4.

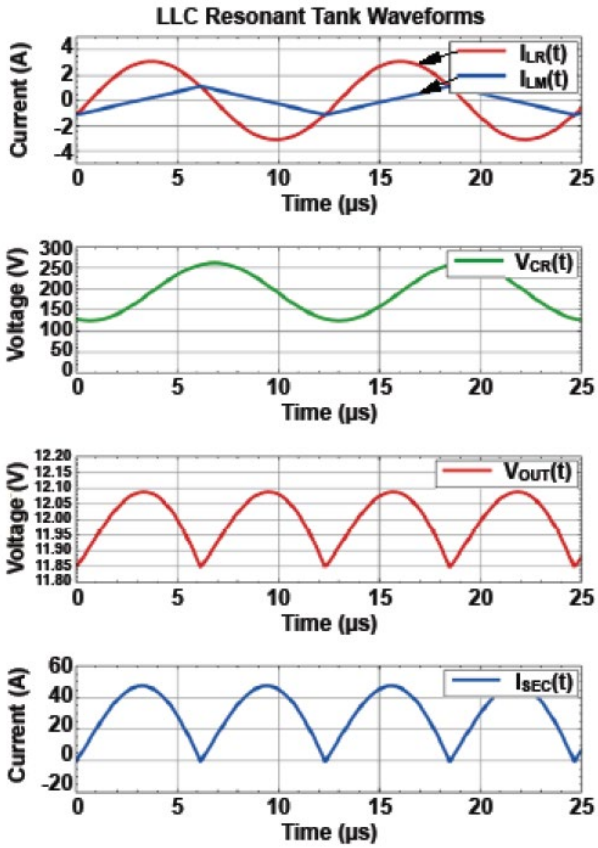

Figure 3 – Operation at resonance; V_{IN} = 387.6 V.

Figure 3 depicts waveform diagrams that illustrate operation at resonance, including a graph of current (A) vs. time (µs) for I_{LR} (t) and I_{LM} (t).

Similarly, Figure 4 of McDonald shows waveforms during operation below resonance, and Figure 5 of McDonald shows waveforms for operation above resonance. Ex. 1005, 5–5. McDonald states that "[i]n Figures 3 and 4, notice that the current through Q3 and Q4 naturally decays to 0 A, providing zero current switching (ZCS) for these devices. In this case, switching Q1 and Q2 – prior to Q3 and Q4 reaching zero current – results in the loss of ZCS for these devices." *Id.*

Figure 25 of McDonald is reproduced below.

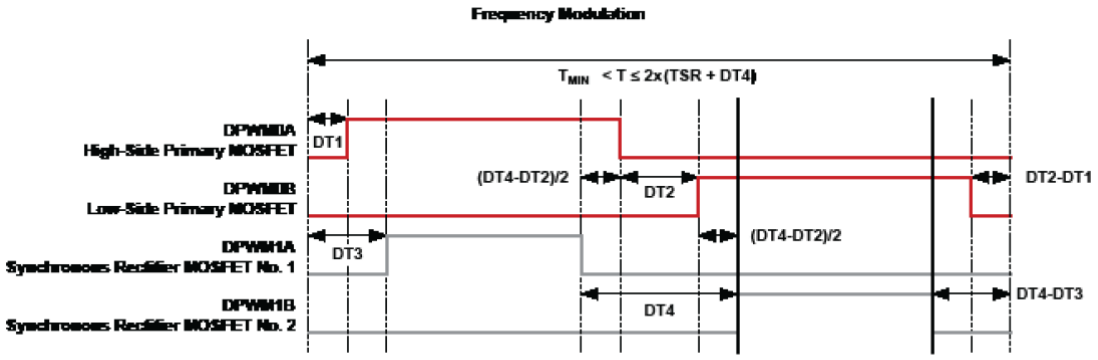

Figure 25 – Frequency modulation.

Figure 25 is a diagram titled "Frequency Modulation" and "illustrates the exact timing relationships between the primary-side MOSFET control signals and the synchronous-rectifier control signals." Ex. 1005, 5–17.

McDonald also states that "[t]he heart of this system uses a Texas Instruments UCD3138 digital controller." Ex. 1005, 5–22.

2. TI UCD3138 (Ex. 1006)

TI UCD3138 is a Data Manual titled "Highly Integrated Digital Controller for Isolated Power." Ex. 1006, 1 It describes that "[t]he UCD3138 is a digital power supply controller . . . offering superior levels of integration and performance in a single chip solution." *Id.* at 7. The controller is described as "suitable for a wide variety of power conversion applications." *Id.* Further, "specific power management peripherals have been added to enable high efficiency across the entire operating range," including "LLC and phase shifted full bridge mode switching." *Id.* In addition, "[t]opology support has been optimized for voltage mode and peak current mode controlled phase . . . LLC half bridge and full bridge." *Id.*

3. Analysis of Independent Claim 1

Petitioner contends that the combination of McDonald and TI UCD3138 teaches the limitations of independent claim 1. Pet. 27–39. In

particular, Petitioner relies on the combination of McDonald and TI UCD3138 to teach limitation 1[c], and on McDonald to teach limitations 1[d] and 1[e]. *Id.* at 31–35. We address these limitations below.[16]

a) Limitation 1[c]

Petitioner contends that McDonald combined with TI UCD3138 renders limitation 1[c] obvious. Pet. 31–32 (citing Ex. 1003 ¶¶ 79–81). Petitioner relies on annotated Figure 25 of McDonald, reproduced below.

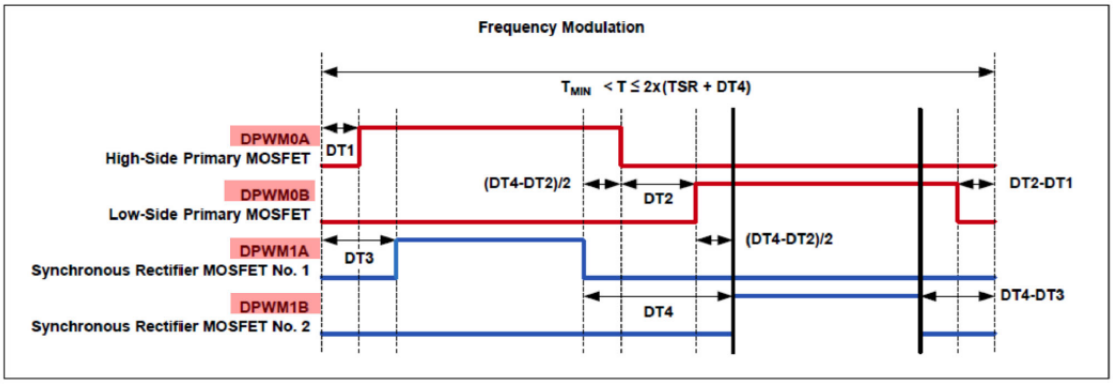

According to Petitioner, annotated Figure 25 of McDonald "shows that timing control signals DPWM0A, DPWM0B, DPWM1A, and DPWM1B (highlighted in red) control both the primary switches (High-Side Primary MOSFET and Low-Side Primary MOSFET) and the secondary switches (Synchronous Rectifier MOSFET No. 1 and Synchronous Rectifier

[16] We focus on limitations 1[c], 1[d], and 1[e] of the '481 patent, as these limitations are dispositive for purposes of this Decision for all seven challenges presented by Petitioner. Petitioner has provided contentions for the remaining limitations, and in some cases, Patent Owner has provided additional arguments disputing Petitioner's contentions. Because we determine that Petitioner has not sufficiently established that the asserted references teach limitations 1[c], 1[d], and 1[e] in all seven challenges, we do not address or take any position on these additional contentions and arguments.

MOSFET No. 2)." *Id.* at 31 (citing Ex. 1005, Fig. 25, 5–17). Petitioner further contends that "TI UCD3138 also teaches that each DPWM can control different timing events." *Id.* at 31–32 (citing Ex. 1006, 28). According to Petitioner, "[w]hen combined with McDonald, the timing control signals are based on clock signals in the resonant converter operating cycle, having a resonant period and frequency." *Id.* at 32 (citing Ex. 1005, 5–4 ("the operating frequency is exactly equal to the dominant frequency of the resonant tank"); Ex. 1003 ¶ 81).

Patent Owner argues that "[t]he combination does not teach a 'standard converter operating cycle, having a standard operating period and frequency.'" Prelim. Resp. 25. Rather, Patent Owner argues, "McDonald's circuit varies its operating frequency, [so] it has neither a standard operating period nor a standard frequency as required by claim limitation 1[c]." *Id.* at 25–26. Patent Owner argues that this is supported by, among other things, Figure 25 (relied upon by Petitioner), which is titled "Frequency Modulation" and "shows at the top how the switching period T can vary within a range." *Id.* at 26–27 (citing, e.g., Ex. 2001 ¶ 75). Patent Owner also argues that "[t]his variation in operating frequency and period is typical for circuits like McDonald's." *Id.* at 27; *see also id.* at 27–31 (describing the LLC series resonant converter circuit in McDonald and arguing that "LLC resonant converters *change their switching frequencies to provide a regulated voltage output*"). According to Patent Owner, Petitioner's reliance on the quote that "the operating frequency is exactly equal to the dominant frequency of the resonant tank" is "taken out of context." *Id.* at 31–32.

Petitioner does not explain sufficiently how the references teach a "standard converter operating cycle, having a standard operating period and

frequency," as recited in limitation 1[c]. Petitioner appears to contend that the combination's "resonant converter operating cycle, having a resonant period and frequency," teaches this limitation (Pet. 32), but provides no explanation in support of this argument.[17] Petitioner relies on McDonald's Figure 25 at page 5–18 which discloses "frequency modulation," and also relies on a quotation associated with Figure 2 at page 5–4 which states that "(the operating frequency is exactly equal to the dominant frequency of the resonant tank)," but does not discuss or explain how these disparate portions of McDonald teach this limitation, nor provide any explanation as to why they purportedly do. *See* Pet. 32. Such bare citations to McDonald's disclosure, without explanation, do not satisfy Petitioner's burden "to show *with particularity* why the patent it challenges is unpatentable." *Harmonic*, 815 F.3d at 1363 (emphasis added).

Petitioner cites to Dr. Hopkins' Declaration, which repeats nearly verbatim the contentions in the Petition, and then adds testimony that "[t]he resonant period and frequency is what the '481 Patent refers to as the 'standard' operating period and frequency." Pet. 32 (citing Ex. 1003 ¶ 81). Dr. Hopkins, however, does not provide any citation to the '481 patent to support this testimony, nor any further explanation as to how or why the resonant period and frequency teaches the "standard operating period and frequency" recited in limitation 1[c]. Therefore, "the cited declaration testimony is conclusory and unsupported, adds little to the conclusory

[17] As discussed below, Petitioner also relies on this theory for all of the remaining six challenges in the Petition, and does not provide further explanation in any of those challenges. Accordingly, as explained below, each of Petitioner's remaining challenges is insufficient for the same reasons described here.

assertion for which it is offered to support, and is entitled to little weight." *Xerox Corp. v. Bytemark, Inc.*, IPR2022-00624, Paper 9 at 15 (PTAB Aug. 24, 2022) (precedential); *see also* 37 C.F.R. § 42.65(a) ("Expert testimony that does not disclose the underlying facts or data on which the opinion is based is entitled to little or no weight."); *Upjohn Co. v. Mova Pharm. Corp.*, 225 F.3d 1306, 1311 (Fed. Cir. 2000) ("Lack of factual support for expert opinion going to factual determinations, however, may render the testimony of little probative value in a validity determination.") (quoting *Ashland Oil, Inc. v. Delta Resins & Refractories, Inc.*, 776 F.2d 281, 294 (Fed. Cir. 1985)).

b) Limitations 1[d] and 1[e]

Petitioner relies on McDonald to teach limitations 1[d] and 1[e]. Pet. 32–36. Petitioner contends that "McDonald teaches that primary switches Q1 and Q2 turn on and off with zero voltage switching." *Id.* at 32–33 (citing Ex. 1005, 5–3, 5–4, Fig. 2). Petitioner further argues that "McDonald also teaches that primary switches Q1 and Q2 turn on and off when zero resonant current is flowing in the switch." *Id.* at 33 (citing Ex. 1003 ¶ 83). Petitioner argues that, in McDonald, "the resonant current is equal to the primary winding current minus the primary magnetizing current ($I_{RES} = I_{LR} - I_{LM}$), and the resonant current is zero when the primary winding current I_{LR} and primary magnetizing current I_{LM} are equal." *Id.* at 34 (citing Ex. 1003 ¶ 83). Petitioner contends that this is supported by Figure 3 of McDonald, and that primary switches Q1 and Q2 generate a square wave, which produces the triangular-shaped magnetizing current and "means that the switches are switching on and off at the minimum and maximum points of the

magnetizing current I_{LM} . . . and . . . there is zero resonant current at these points." *Id.* at 34–35 (citing Ex. 1005, Fig. 3, 5–5).

Patent Owner argues that McDonald's "primary-side switches do not switch with essentially zero resonant current flowing therethrough." Prelim. Resp. 33 (citing Ex. 2001 ¶ 85). Patent Owner argues that McDonald states that it does not provide zero-current switching (ZCS) of its primary switches Q1 and Q2. *Id.* at 34 (citing Ex. 1005, 5–5). Patent Owner further argues that "[t]he ability to achieve only ZVS (**not ZCS**) on the primary-side switches was a well-known limitation of LLC resonant converters in the relevant timeframe." *Id.* at 34–35 (citing Ex. 2001 ¶ 87); *see also id.* at 35–36 (citing, e.g., Ex. 2006, 1:42–47; Ex. 2007, 1:29–41; Ex. 2011, 1:66–2:4). Patent Owner argues that, "[i]n accord with this known behavior, McDonald only states that the converter achieves ZVS for the primary-side switches and ZCS for the secondary switches, *not* ZCS and ZVS for both, primary and secondary switches." *Id.* at 37 (citing Ex. 1005, 5–3, 5–5) (emphasis omitted). Patent Owner argues that Petitioner's analysis of Figure 3 is incorrect and takes McDonald's disclosure out of context because Figure 3 shows the operation at the transition point between two ranges of operating frequencies, below and above the resonant frequency. *Id.* at 37–38.

We agree with Patent Owner that McDonald's description of Figure 3 indicates that primary switches Q1 and Q2 do not switch with essentially zero resonant current flowing through. McDonald states:

> In Figures 3 and 4, notice that the current through Q3 and Q4 naturally decays to 0 A, providing zero current switching (ZCS) for these devices. In this case, **switching Q1 and Q2** – prior to Q3 and Q4 reaching zero current – **results in the loss of ZCS for these devices**.

Ex. 1005, 5–5 (emphasis added). As indicated in the first sentence of the quoted paragraph, McDonald explicitly states that ZCS is provided for secondary switches Q3 and Q4, and as indicated in the second sentence, switching Q1 and Q2 results in the *loss of ZCS* for Q1 and Q2. *See* Ex. 2001 ¶ 86. We further agree with Patent Owner that Petitioner's reliance on McDonald's Figure 3 is taken out of context, as this figure illustrates one "operating point" "at the boundary between two of the most common operating modes of the converter." Ex. 1005, 5–4. This also is also supported by Patent Owner's argument that "[t]he ability to achieve only ZVS (**not ZCS**) on the primary-side switches was a well-known limitation of LLC resonant converters in the relevant timeframe." Prelim. Resp. 34–36. Therefore, Petitioner's contentions as to limitation 1[d] are insufficient on this record.

Even assuming Petitioner's analysis of Figure 3 of McDonald is correct (and therefore, that McDonald teaches limitation 1[d]), Petitioner has not shown that McDonald teaches limitation 1[e], specifically that McDonald teaches to "turn the at least one secondary switch ON *and* OFF at times when . . . essentially zero voltage is impressed across the respective at least one secondary switch." (Emphasis added).

Petitioner argues that

> McDonald also discloses that secondary switches Q3 and Q4 turn on and off with zero voltage switching. Ex. 1005, 5-21 ("Figures 32, 33 and 34 illustrate this feature in action. . . . Notice that in all cases, the body-diode conduction time across the synchronous rectifiers is very close to minimum."); Ex. 1003, ¶ 88. A POSITA would understand that MOSFET switches inherently achieve zero voltage at turn off because when a MOSFET switch is on it has zero volts across it, and in the short time it takes to turn off, the voltage does not change

> significantly because the inherent capacitance of the device mitigates fast changes in voltages. *Id*.

Pet. 36. As argued by Patent Owner (Prelim. Resp. 39–40), Petitioner does not provide further explanation as to how it interprets the quoted disclosure at page 5–21 in McDonald or why Petitioner believes it teaches limitation 1[e], and Dr. Hopkins' Declaration merely repeats this argument verbatim at paragraph 88. In other words, Petitioner does not provide sufficient explanation as to how McDonald teaches that secondary switches Q3 and Q4 turn on and off with zero voltage switching, as recited in limitation 1[e].

Petitioner also appears to rely on an inherency argument, but, again, neither Petitioner nor Dr. Hopkins provides explanation why secondary switches Q3 and Q4 would necessarily achieve zero voltage switching when turned on and off. *See PAR Pharm., Inc. v. TWI Pharm., Inc.*, 773 F.3d 1186, 1195 (Fed. Cir. 2014) (stating that "[a] party must, therefore, meet a high standard in order to rely on inherency to establish the existence of a claim limitation in the prior art in an obviousness analysis—the limitation at issue necessarily must be present, or the natural result of the combination of elements explicitly disclosed by the prior art."). Moreover, similar to limitation 1[d], Patent Owner provides persuasive argument that "[a]chieving ZCS for secondary-side switches, without ZVS, was, in the relevant timeframe, known behavior for LLC Resonant Converters." Prelim. Resp. 39 (citing Ex. 2001 ¶ 93; Ex. 2011, 1:66–2:4; Ex. 2006, 1:29–41).

c) Conclusion Regarding Independent Claim 1

Petitioner thus fails to meet the burden required to support institution of *inter partes* review of independent claim 1. For the reasons set forth

above, we determine that the information presented in the Petition does not demonstrate a reasonable likelihood that claim 1 is unpatentable under 35 U.S.C. § 103 over the combination of McDonald and TI UCD3138.

4. Remaining Claims

Petitioner contends that the combination of McDonald and TI UCD3138 also teaches the limitations of claims 22 and 31–35, all of which depend from claim 1. Therefore, for the same reasons as set forth for claim 1, Petitioner does not demonstrate a reasonable likelihood that claims 22 and 31–35 are unpatentable under 35 U.S.C. § 103 over the combination of McDonald and TI UCD3138.

E. *Alleged Obviousness Over Shimada and AAPA*

Petitioner contends claims 1 and 22 would have been obvious over Shimada and AAPA. Pet. 50–57. Having considered the arguments and evidence before us, we are not persuaded that Petitioner has established a reasonable likelihood that it would prevail with respect to at least one challenged claim in this ground.

1. Shimada (Exs. 1007 and 1008 (translation))

Shimada is titled "Current-fed Series Resonant DC/DC Converter and Power Conversion Control Method," and is generally directed to a "low-loss current-fed series resonant DC/DC converter that can supply bidirectional DC power and soft switching with simple control regardless of the output voltage of the power supply." Ex. 1008, codes (54), (57).

Figure 1, reproduced below, shows the configuration of the DC/DC converter of a first embodiment. Ex. 1008 ¶ 11.

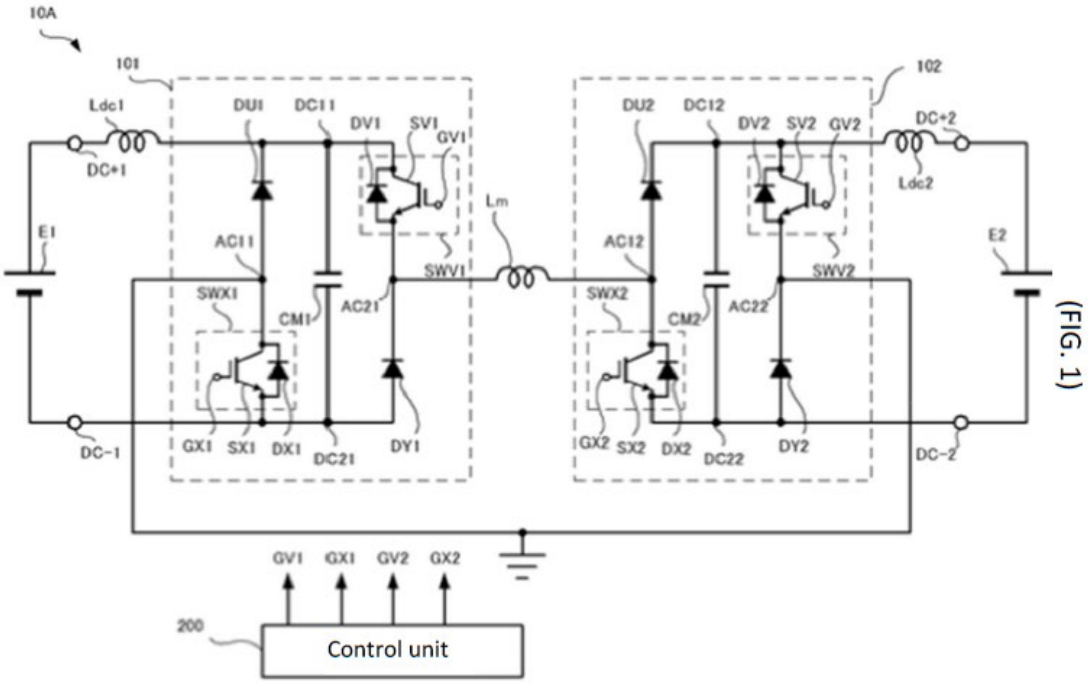

(FIG. 1)

Figure 1 is a diagram that depicts, among other things, magnetic energy recovery switches (MERSes) 101 and 102, inductors Ldc1 and Ldc2, inductor Lm, and control unit 200. Ex. 1008 ¶ 14. Control unit 200 "supplies the gate signals SGGV1, SGGX1, SGGV2, and SGGX2 to the gates GV1, GX1, GV2, and GX2, respectively." *Id.* ¶ 28. "Each gate signal indicates on or off for a semiconductor switch provided with a gate to which the gate signal is supplied." *Id.* ¶ 29. Shimada describes that:

> Before the start of operation, the control unit 200 outputs all of the gate signals SGGV1, SGGX1, SGGV2, and SGGX2 as off signals and repeats the next cycle C1 on the basis of the pre-stored times d1 and d2 and the frequency f1 in response to a user instruction, for example.
>
> In the cycle C1, the control unit 200 simultaneously switches all of the gate signals SGGV1, SGGX1, SGGV2, and SGGX2 from the off signal to the on signal. Then, [at] time d2 after switching to the on signals, the gate signals SGGV2 and SGGX2 are switched from on signals to off signals, and then

> after another time (d1–d2) elapses, the gate signals SGGV1 and SGGX1 are switched from the on signals to the off signals.
>
> The control unit 200 repeats this cycle C1 at the frequency f1.

Ex. 1008 ¶ 31.

Figure 10, reproduced below, shows a variation of the DC/DC converter first embodiment of Figure 1. Ex. 1008 ¶ 11.

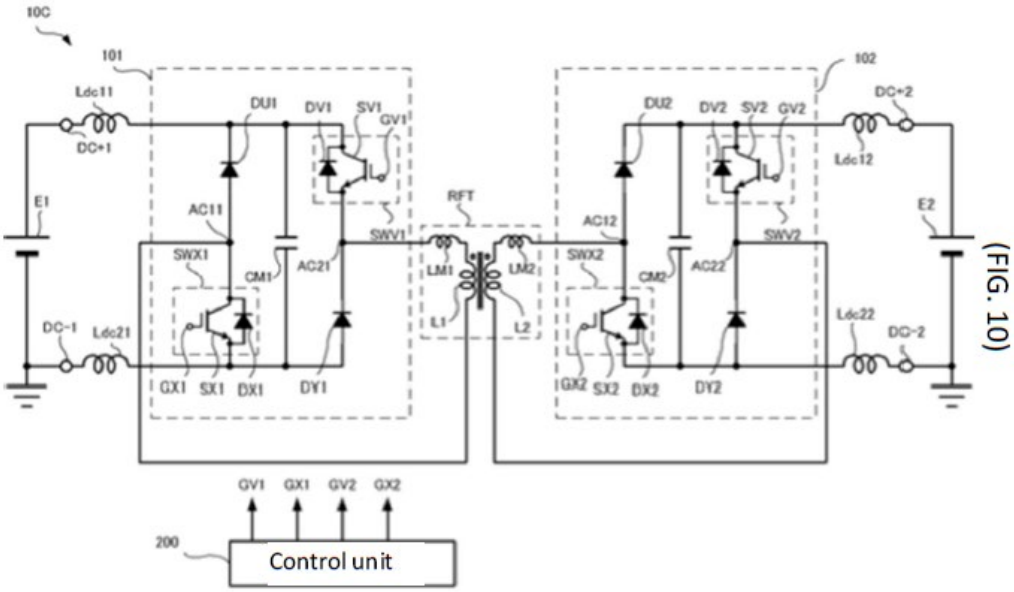

(FIG. 10)

Figure 10 is a diagram that depicts, among other things, that inductor Lm may be replaced with a high-frequency transformer RFT that is configured from a primary coil L1, a secondary coil L2, and leakage inductances LM1 and LM2. Ex. 1008 ¶ 77. Shimada describes that "soft switching is achieved in the first embodiment and its variants." *Id.* ¶ 85.

Figure 13, reproduced below, shows the configuration of the DC/DC converter of a second embodiment. Ex. 1008 ¶ 11.

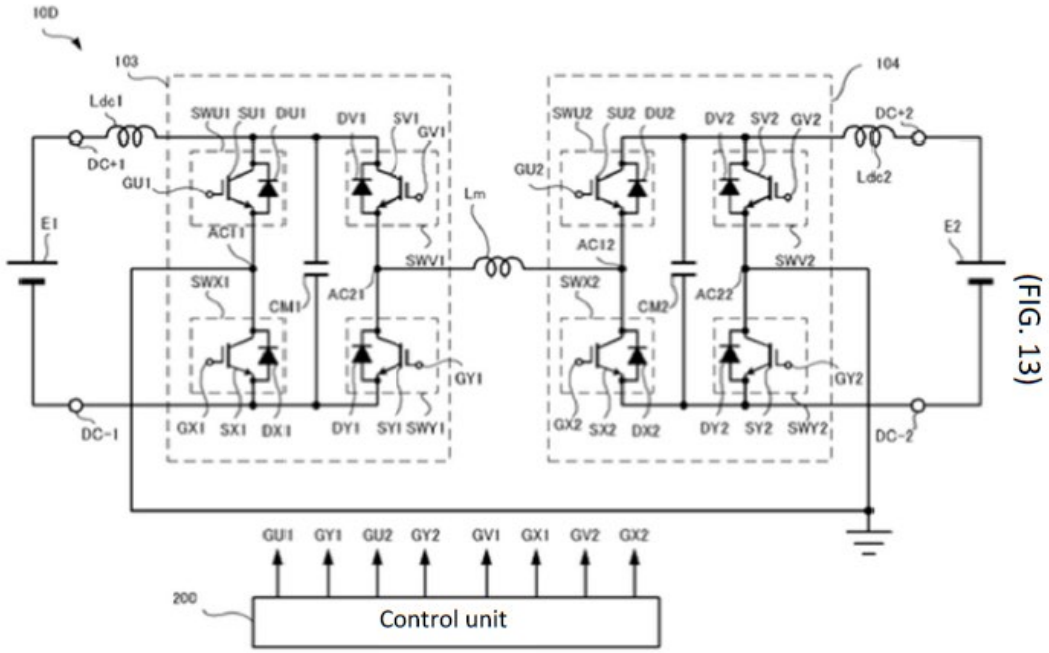

(FIG. 13)

Figure 13 is a diagram that depicts, among other things, magnetic energy recovery switches (MERSes) 103 and 104, inductors Ldc1 and Ldc2, an inductor Lm, and a control unit 200. Figure 15 shows a variation of the DC/DC converter of Figure 13. Ex. 1008 ¶ 11. Figure 16, like Figure 10, shows a variation of the second embodiment of Figure 13 where the inductor Lm of the DC/DC converter is replaced with a high-frequency transformer RFT. *Id.* ¶ 111.

Figure 20(A) (a) to (c), reproduced below, shows a drawing explaining the relationship between the time variations of the voltages in the capacitors of the two MERSes in the DC/DC converter in Figure 15 when the control is set to a repeat frequency of 10 kHz, i.e., the time variation of the current flowing in the inductor, and the on-off transitions of the switches. Ex. 1008 ¶ 11.

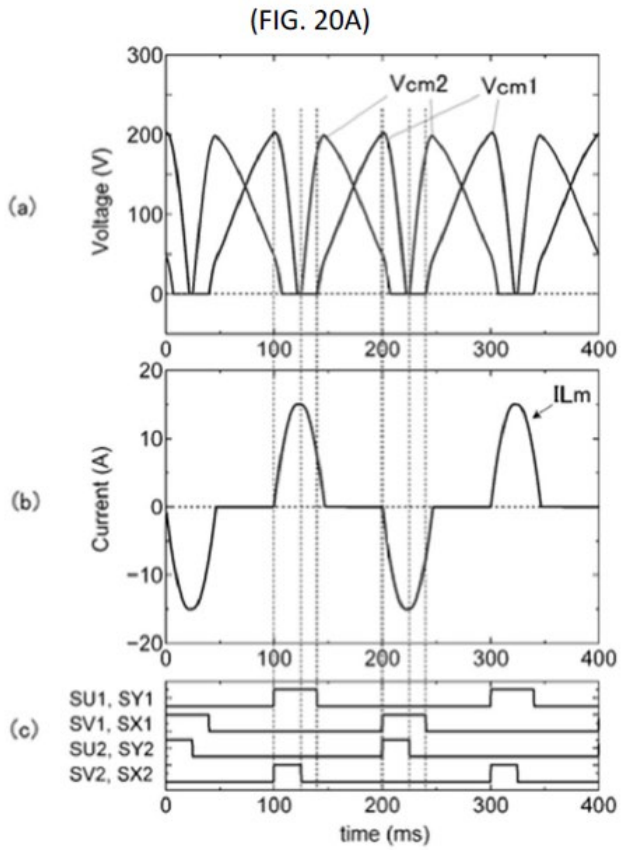

With respect to Figure 20A, above, Shimada describes

> As can be seen from FIG. 20A to 20C, when switching the gate signals from the on signal to the off signal, the capacitor voltage of that MERS is almost zero, and when switching the gate signals from the off signal to the on signal, the current flowing in the inductor Lm is almost zero. Therefore, the switching of each switch is at zero voltage or zero current, and soft switching is achieved with both high and low charges per time.

Ex. 1008 ¶ 127.

Figure 23(a), reproduced below, shows a variation of the control unit.

Ex. 1008 ¶ 11.

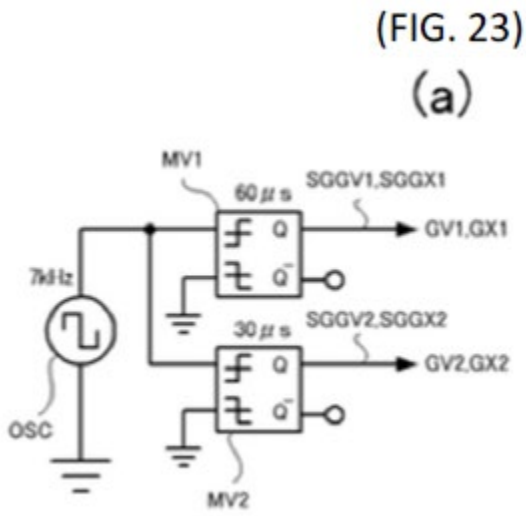

Figure 23(a), above, is a circuit diagram that "shows a control circuit that outputs the gate signals SGGV1, SGGX1, SGGV2, and SGGX2 of the DC-DC converter using the one-directional MERS described [in Shimada]. This circuit is equipped with an oscillator OSC and one-short multivibrators MV1 and MV2." Ex. 1008 ¶ 137. "The oscillator OSC outputs clock pulses with the frequency of 7 kHz (frequency f1)." *Id.*

2. AAPA (Exs. 1001, 1009)

Petitioner asserts that "[t]he '481 Patent discloses multiple instances of AAPA related to zero voltage and zero current switching." Pet. 26 (citing Ex. 1003 ¶¶ 67–70). As cited in Dr. Hopkins' Declaration, Petitioner relies on certain disclosures in the '481 patent relating to Figure 1. Ex. 1003 ¶¶ 67–69. Figure 1, reproduced below, shows a block diagram of a half-bridge sine amplitude converter (SAC) 10:

Fig. 1

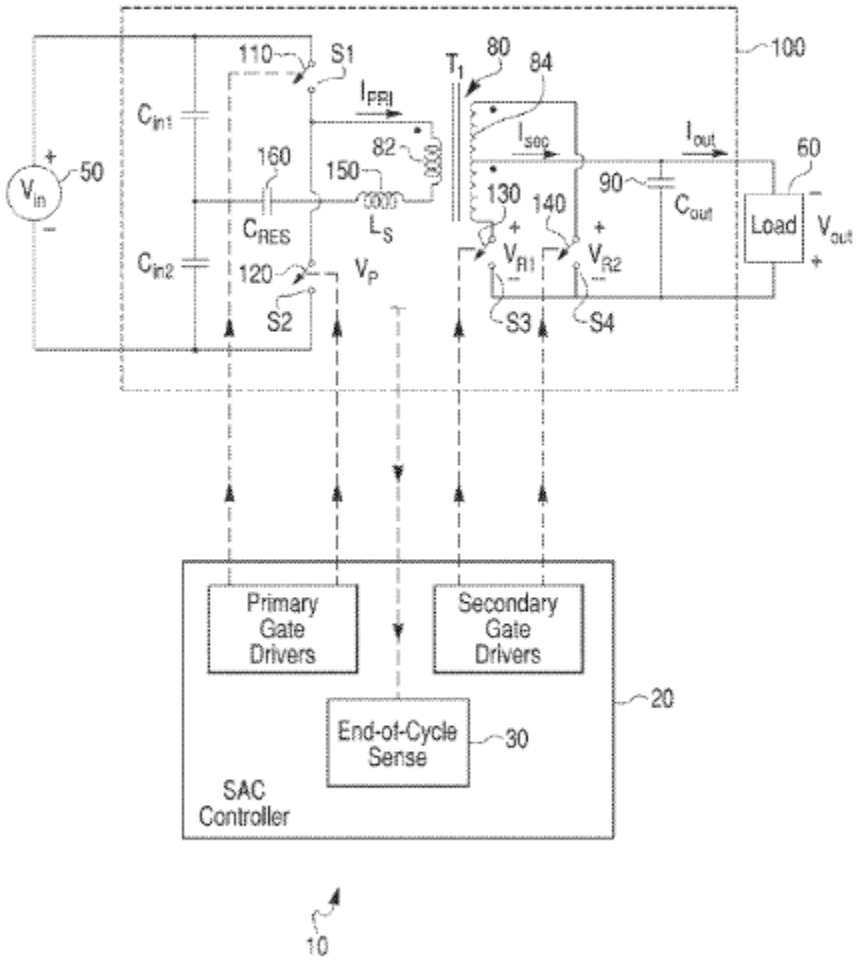

Prior Art

Figure 1 is a diagram, which is described as "Prior Art," showing, among other things, SAC power conversion circuitry 100 and SAC controller 20 "which controls the turning ON and OFF of switches within the power conversion circuitry 100." Ex. 1001, 1:22–25.

> A simplified and idealized summary of the operation of the sine amplitude converter 10 is [described] as follows . . . : switches S1 110 and S3 130 are closed when the voltages across switches S1 110 and S3 130, and the resonant portion of the primary current I_{pri}, are each substantially zero, initiating a

> power transfer interval. . . . When the sinusoidal current flow completes a half-cycle, and the current I_{prt} returns substantially to zero, switches S1 110 and S3 130 are opened. An energy recycling interval following the opening of switches S1 110 and S3 130, allows the transformer 80 magnetizing current to charge and discharge circuit parasitic capacitances such that the voltages across switches S2 120 and S4 140 decline toward zero.

Ex. 1001, 1:28–32, 1:36–39 (cited at Ex. 1003 ¶¶ 67–68). In addition, the '481 patent also states that "the voltage across one or more of the switches may be monitored to establish the timing of a zero-voltage switching ('ZVS') or zero-current switching ('ZCS') event." *Id.* at 1:66–2:3 (cited at Ex. 1003 ¶ 69).

Further, Petitioner asserts that U.S. Patent No. 6,984,965 ("the '965 patent"), which describes the SAC converter described above (*see* Ex. 1001, 1:14–20), is incorporated by reference in the '481 patent, and states that "the VTM [voltage transformation module] may include secondary switches turned on and off essentially at times of zero voltage to rectify power from the transformer. The VTM may include secondary switches on and off essentially at times of zero current to rectify power from the transformer." Ex. 1003 ¶ 70 (citing and quoting Ex. 1009, 9:25–29).

3. Analysis of Independent Claim 1

Petitioner contends that the combination of Shimada and AAPA teaches the limitations of independent claim 1. Pet. 51–56. In particular, Petitioner relies on Shimada to teach limitation 1[c], and on the combination of Shimada and AAPA to teach limitations 1[d] and 1[e]. *Id.* at 53–55. We address these limitations below.

a) Limitation 1[c]

Petitioner contends that Shimada's "controller 200 generates timing control signals (gate signals) to control the primary and secondary switches." Pet. 53 (citing Ex. 1003 ¶ 111; Ex. 1008 ¶ 31). Petitioner further asserts that "[t]he converter in Shimada inherently operates at a resonant period and frequency to achieve ZVS and ZCS." *Id.* (citing Ex. 1003 ¶ 112).

Patent Owner argues that Shimada does not teach a "standard converter operating cycle, having a standard operating period and frequency," as recited in limitation 1[c]. Prelim. Resp. 51. Patent Owner argues that "Shimada teaches changing the operation frequency in order to change the output power of the converter." *Id.* (citing Ex. 1008 ¶¶ 66, 69, 121–126; Ex. 2001 ¶ 115). Patent Owner further argues that Shimada describes the switching frequency f1 (i.e., the operation frequency)[18] as being different from the resonant frequency. *Id.* at 52 (citing Ex. 1008 ¶ 32). Patent Owner also argues that Petitioner does not sufficiently argue inherency. *Id.* at 52–53. In addition, Patent Owner argues that Shimada states that it can achieve either ZVS or ZCS, not both. *Id.* at 53 (citing Ex. 1008 ¶ 127).

Petitioner does not sufficiently explain how the references teach limitation 1[c]. At the outset, we note that the Petition does not address or

[18] Patent Owner uses the terms "operating frequency" and "switching frequency" interchangeably. Dr. Rivas-Davila provides testimony supporting this, e.g., that "[t]he applied AC voltage in a resonant circuit can have a frequency (called the 'operating frequency' or 'switching frequency' if switches are used) that is different from the resonant frequency." *See* Ex. 2001 ¶ 56; *see also* ¶ *id.* ¶ 43 (referring to the "operating" or "switching" frequency).

explain how or why Shimada teaches "generating timing control signals *for each of a plurality of events based upon the clock signals* in a (A) standard converter operating cycle, having a standard operating period and frequency," as recited in limitation 1[c] (emphasis added).[19]

Moreover, Petitioner appears to rely on the same theory as set forth in the McDonald/TI UCD3138 challenge (Section III.D.3.a above), that the "standard converter operating cycle, having a standard operating period and frequency," is taught by operation of Shimada's converter having a resonant period and frequency. *See* Pet. 53 (citing Ex. 1003 ¶ 112). Dr. Hopkins provides testimony that "Shimada discusses achieving ZVS and ZCS, and this requires a resonant frequency." Ex. 1003 ¶ 112. We agree with Patent Owner that "[t]he Petition thus appears to be arguing that because Shimada (allegedly) uses ZVS and ZCS, it is inherently operating at the resonant frequency, and thus inherently at a 'standard operating period and frequency.'" Prelim. Resp. 51.

For the same reasons as discussed in Section III.D.3.a, we agree with Patent Owner that Petitioner does not sufficiently explain how Shimada teaches a "standard converter operating cycle, having a standard operating period and frequency," as recited in limitation 1[c]. In addition, we agree with Patent Owner that Petitioner has not provided sufficient explanation as to its inherency position. *See PAR Pharm.*, 773 F.3d at 1195. That is, Petitioner has not explained how operation at resonant frequency necessarily results from the (alleged) ZVS or ZCS teachings of Shimada. Finally, we also agree with Patent Owner that Shimada teaches that the operating

[19] Likewise, the challenges involving Chen/AAPA and Leung/AAPA also fail to address this portion of limitation 1[c].

frequency (i.e., Shimada's switching frequency) is different from the resonant frequency. *See* Ex. 1008 ¶ 32 (stating in part that "the resonant frequency between the capacitor CM1 and the inductor Ldc1 and the resonant frequency between the capacitor CM2 and the inductor Ldc2 are no greater than half of the frequency f1").

b) Limitations 1[d] and 1[e]

Petitioner argues that Shimada in combination with AAPA renders obvious limitations 1[d] and 1[e]. Pet. 53–55. Petitioner argues that Shimada teaches zero voltage and zero current switching in the primary and secondary switches. *Id.* at 53–54 (citing Ex. 1008 ¶ 127). Petitioner also argues that AAPA teaches that zero voltage and zero current switching can be used to turn the primary and secondary switches on and off. *Id.* at 54–55 (citing Ex. 1001, 1:28–32, 1:36–43, 1:66–2:3; Ex. 1009, 9:25–29).

Petitioner argues that a person of ordinary skill in the art "would have been motivated to combine Shimada with the AAPA for purposes of zero current and zero voltage switching because both are related to resonant converters, and Shimada contemplates zero current and zero voltage switching, which the AAPA explicitly teaches." Pet. 50 (citing Ex. 1003 ¶ 103). Petitioner contends that a person of ordinary skill in the art "would have understood and expected that the AAPA's teachings, which were generally known in the prior art, would apply to Shimada's resonant converter, and would have looked to the AAPA for additional details related to zero current and zero voltage switching." *Id.* at 50–51.

Patent Owner argues that Petitioner relies on paragraph 127 of Shimada, which relates to Figures 15 and 19, which do not have a transformer. Prelim. Resp. 54. According to Patent Owner, "[b]ecause the

transformer *defines* the primary and secondary sides (the transformer is the boundary between the two) it makes no sense to talk about 'primary' and 'secondary' switches in the context of this embodiment of Shimada." *Id.* (citing Ex. 2001 ¶ 120). Furthermore, Patent Owner argues that paragraph 127 states that "switching of each switch is at zero voltage **or** zero current," not both. *Id.* (citing Ex. 1008 ¶ 127; Ex. 2001 ¶ 120).

Patent Owner also argues that Petitioner has not provided sufficient motivation to combine the references and lacks any explanation of why there would have been a reasonable expectation of success. Prelim. Resp. 40–45. Patent Owner argues that "it is not a simple matter to configure a circuit to achieve *either* ZVS or ZCS on *either* the primary or secondary switches, much less both ZVS and ZCS on both a primary- and secondary- switch." *Id*. at 42 (citing Ex. 2001 ¶ 101). According to Patent Owner, the AAPA "achieves ZVS-ZCS with a *unique* power train in a class of topologies controlled to do so: Vicor's prior art Sine-Amplitude Converters (SACs)." *Id.* at 43 (citing Ex. 2001 ¶ 102); *see* Ex. 2001 ¶ 104. Further, Patent Owner argues, "[e]ven assuming that a hypothetical redesign to achieve *both* ZVS and ZCS for *both* primary- and secondary-side switches was possible, the result would be a different circuit, with different principles of operation." *Id.* at 44 (citing Ex. 2001 ¶ 104). Patent Owner argues that "Petitioner has not even attempted to evaluate whether a prior-art circuit, modified in an unknown way to achieve ZVS and ZCS, would not be otherwise impaired to an extent that no one would attempt the modification—even if they knew what it was." *Id.*

We agree with Patent Owner that Petitioner's showing for limitations 1[c] and 1[d] is deficient. Petitioner's contentions that Shimada teaches zero

voltage and zero current switching in both the primary and secondary switches is not supported by Shimada's disclosure, and neither Petitioner nor Dr. Hopkins provides any explanation other than a bare citation to paragraph 127 of Shimada. *See* Pet. 53–54 (citing Ex. 1003 ¶¶ 113–115; Ex. 1008 ¶ 127). We agree with Patent Owner that paragraph 127 of Shimada discloses that "the switching of ***each switch*** is at zero voltage ***or*** zero current," not both. Ex. 1008 ¶ 127 (emphasis added); Prelim. Resp. 54.

Furthermore, Petitioner does not explain sufficiently, let alone with particularity, how or why a person of ordinary skill in the art would have combined Shimada and AAPA or had a reasonable expectation of success in doing so.[20] A determination of obviousness cannot be reached where the record lacks "explanation as to *how* or *why* the references would be combined to produce the claimed invention." *TriVascular, Inc. v. Samuels*, 812 F.3d 1056, 1066 (Fed. Cir. 2016); *see NuVasive*, 842 F.3d at 1382–86 (holding that an obviousness determination cannot be reached where there is no "articulat[ion of] a *reason why* a [person having ordinary skill in the art] would combine" and "modify" the prior art teachings). Petitioner's analysis is conclusory, non-specific, and "fail[s] to provide any meaningful explanation for why one of ordinary skill in the art would be motivated to combine [Shimada and AAPA] at the time of this invention." *InTouch Techs., Inc. v. VGO Commc'ns, Inc.*, 751 F.3d 1327, 1353–54 (Fed. Cir. 2014). Nor does Petitioner provide any explanation as to how Shimada and

[20] As set forth below, Petitioner provides essentially the same motivation to combine the primary reference with AAPA for all of the remaining challenges. Accordingly, as explained below, each of Petitioner's remaining challenges is insufficient for the same reasons described here.

AAPA would be combined. Moreover, because Petitioner asserts that *both* Shimada and AAPA teach that the primary and secondary switches may achieve ZVS and ZCS, it is unclear from the Petition why and in what way Shimada and AAPA are being combined, and the Petition leaves the Board guessing what modifications Petitioner proposes to Shimada.

As rationale for the combination, Petitioner essentially identifies similarities between Shimada and AAPA (i.e., both are related to resonant converters, Shimada contemplates ZVS and ZCS), but this is insufficient to explain why a person of ordinary skill in the art would have been motivated to combine Shimada with AAPA. *See KSR*, 550 U.S. at 418. The Federal Circuit has concluded that merely asserting that because two references "were drawn from the same general field of art, the skilled artisan would have turned to them to solve the problems identified in the [challenged] Patent" is insufficient. *Securus Techs., Inc. v. Glob. Tel*Link Corp.*, 701 F. App'x 971, 976 (Fed. Cir. 2017); *see also DSS Tech. Mgmt., Inc. v. Apple Inc.*, 885 F.3d 1367, 1374–77 (Fed. Cir. 2018) (stating that "[t]he similarities in transmission hardware cannot close these [technical gaps in the expert's testimony] without additional, reasoned analysis"); *Microsoft Corp. v. Enfish, LLC*, 662 F. App'x 981, 990 (Fed. Cir. 2016) ("[T]he Board correctly concluded that [the petitioner] did not articulate a sufficient motivation to combine. With respect to . . . [certain challenged claims, the petitioner] gave no reason for the motivation of a person of ordinary skill to combine . . . [the two references] except that the references were directed to the same art or same techniques . . . ."). Accordingly, Petitioner's contentions that the references both are related to resonant converters and contemplate ZCS and ZVS, even if true, are insufficient to show why a

person of ordinary skill in the art would have combined Shimada and AAPA.

Petitioner relies on testimony from Dr. Hopkins (Ex. 1003 ¶ 107), but as Patent Owner points out, this testimony merely repeats verbatim what is stated in the Petition with no additional explanation. *See ActiveVideo Networks, Inc. v. Verizon Commc'ns, Inc.*, 694 F.3d 1312, 1327 (Fed. Cir. 2012) ("The expert failed to explain how specific references could be combined, which combination(s) of elements in specific references would yield a predictable result, or how any specific combination would operate or read on the asserted claims."); *Xerox Corp.*, IPR2022-00624, Paper 9 at 15. Indeed, we fail to see any *reason* provided by Petitioner or Dr. Hopkins as to why a person of ordinary skill in the art would be motivated to combine Shimada with AAPA.

Nor is Petitioner's assertion that Shimada and AAPA disclose limitations 1[d] and 1[e] sufficient. "[I]t is not enough to simply show that the [prior art] references disclose the claim limitations; in addition, 'it can be important to identify a reason that would have prompted [the skilled artisan] to combine the elements as the new invention does.'" *Transocean Offshore Deepwater Drilling, Inc. v. Maersk Contractors USA, Inc.*, 617 F.3d 1296, 1303–04 (Fed. Cir. 2010) (quoting *KSR*, 550 U.S. at 401); *Unigene Labs., Inc. v. Apotex, Inc.*, 655 F.3d 1352, 1360 (Fed. Cir. 2011) ("Obviousness requires more than a mere showing that the prior art includes separate references covering each separate limitation in a claim under examination."); *In re Kotzab,* 217 F.3d 1365, 1371 (Fed. Cir. 2000) ("[A] rejection cannot be predicated on the mere identification . . . of individual components of claimed limitations. Rather, particular findings must be made as to the

reason the skilled artisan, with no knowledge of the claimed invention, would have selected these components for combination in the manner claimed."). "[O]bviousness requires the additional showing that a person of ordinary skill at the time of the invention would have selected and combined those prior art elements in the normal course of research and development to yield the claimed invention." *Unigene*, 655 F.3d at 1360.

Further, as Patent Owner argues, Petitioner does not address the reasonable expectation of success. *Broadcom Corp. v. Emulex Corp.*, 732 F.3d 1325, 1335 (Fed. Cir. 2013) ("Even assuming that a person of ordinary skill might have some motivation to [combine], the record does not show any reasonable expectation that this significant change would be successful."). Even assuming that a person of ordinary skill in the art might have some motivation to combine Shimada with AAPA, the record does not show any evidence as to what this combination entails, nor any reasonable expectation that the change would be successful.

In short, Petitioner's arguments fall short of "some articulated reasoning with some rationale underpinning to support the legal conclusion of obviousness." *KSR*, 550 U.S. at 418.

c) Conclusion Regarding Independent Claim 1

Petitioner thus fails to meet the burden required to support institution of *inter partes* review of independent claim 1. For the reasons set forth above, we determine that the information presented in the Petition does not demonstrate a reasonable likelihood that claim 1 is unpatentable under 35 U.S.C. § 103 over the combination of Shimada and AAPA.

4. Dependent Claim 22

Petitioner contends that the combination of Shimada and AAPA also teaches the limitations of claim 22, which depends from claim 1. Pet. 56–57. Therefore, for the same reasons as set forth for claim 1, Petitioner does not demonstrate a reasonable likelihood that claim 22 is unpatentable under 35 U.S.C. § 103 over the combination of Shimada and AAPA.

F. *Alleged Obviousness Over Chen and AAPA*

Petitioner contends that claims 1 and 22 would have been obvious over the combination of Chen and AAPA. Pet. 57–66. Having considered the arguments and evidence before us, we are not persuaded that Petitioner has established a reasonable likelihood that it would prevail with respect to at least one challenged claim in this ground.

1. Chen (Ex. 1010)

Chen is titled "Switching Power Supply Device and Switching Power Supply Control Circuit" and is generally directed to "a switching power supply device and switching power supply control circuit comprising a series resonance circuit having a current resonance inductor and a current resonance capacitor." Ex. 1010, code (54), 1:7–10 (emphasis and capitalization omitted). Chen describes that "the invention provides a switching power supply device, in which an input DC voltage is applied to a series resonance circuit, a prescribed output voltage is generated via a transformer, and power is supplied to a load." *Id.* at 7:30–34. Figure 1, reproduced below, is a circuit diagram showing the overall configuration of the switching power supply device. *Id.* at 8:42–43.

FIG. 1

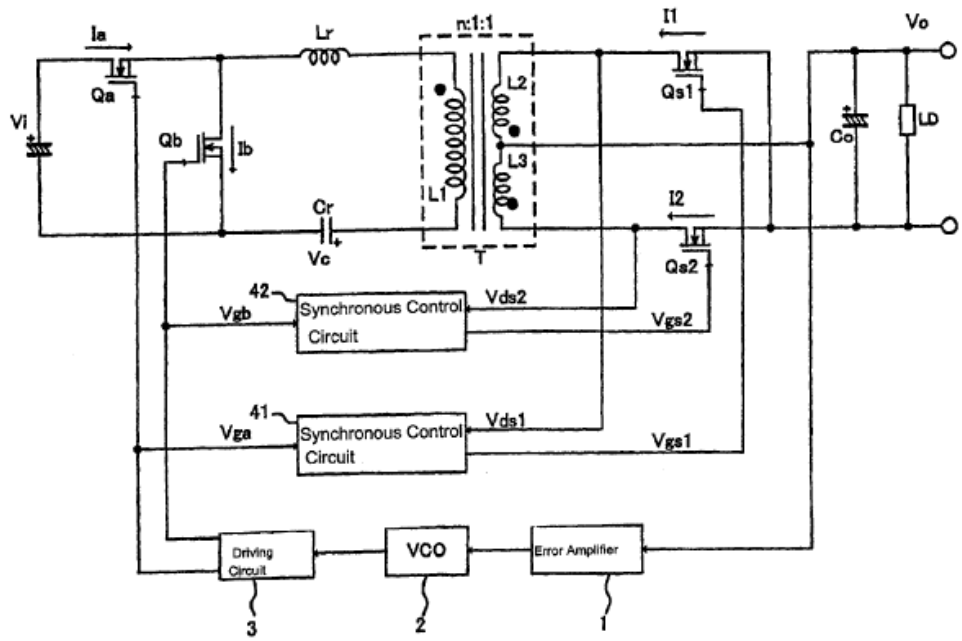

Figure 1, above, is a diagram that shows a switching power supply device with: two primary side MOSFET switching elements (Qa and Qb), two secondary side MOSFET switching elements (Qs1 and Qs2), a resonant circuit on the primary side (Lr, Cr), a transformer (T), and control circuitry, including voltage controlled oscillator circuit (VCO), driving circuit 3, and control signals (Vga, Vgb, Vgs1, and Vgs2) for controlling the switches in the converter. *Id.* at 9:25–31, 9:40–47, 9:55–10:27.

2. Analysis of Independent Claim 1

Petitioner contends that the combination of Chen and AAPA teaches the limitations of independent claim 1. Pet. 57–64. In particular, Petitioner relies on Chen to teach limitation 1[c], and on the combination of Chen and AAPA to teach limitations 1[d] and 1[e]. *Id.* at 60–62. We address these limitations below.

a) Limitation 1[c]

Petitioner contends that Chen's "Driving Circuit generates timing control signals (gate signals and synchronous driving signals) to control primary switches Qa and Qb and secondary switches Qs1 and Qs2." Pet. 60; *see id.* at 61 (citing Ex. 1010, 9:58–62, 10:10–14, Fig. 1). Petitioner further asserts that "[t]he converter in Chen inherently operates at [a] resonant period and frequency to achieve ZCS." *Id.* (citing Ex. 1003 ¶ 132).

Patent Owner argues that Chen does not teach the "standard converter operating cycle, having a standard operating period and frequency," because "Chen operates with a *variable* operating frequency" and "uses [a Voltage-Controlled Oscillator] 2 to change its operating frequency in order to regulate the output voltage of the circuit." Prelim. Resp. 55 (citing Ex. 1010, 3:1–5, 3:38–42, 9:63–10:3; Ex. 2001 ¶ 124). Patent Owner further argues that "Chen *expressly* teaches that its operating frequency varies and that it is different from the resonant frequency." *Id.* at 56 (citing Ex. 1010, 3:1–5, 3:38–40). In addition, Patent Owner argues that Petitioner has not "made a case for inherency." *Id.*

Petitioner does not sufficiently explain how Chen teaches limitation 1[c] for the same reasons as set forth in the challenges above (Sections III.D.3.a, III.E.3.a). That is, Petitioner does not explain or even address how or why Chen teaches "for each of a plurality of events based upon the clock signals," as recited in limitation 1[c]. Petitioner also appears to rely on the same theory as set forth in the previous challenges discussed above, that the "standard converter operating cycle, having a standard operating period and frequency," is taught by operation of the resonant converter at a resonant period and frequency. *See* Ex. 1003 ¶ 132. Dr. Hopkins additionally

testifies that "Chen discusses achieving ZCS, and this requires a resonant frequency." *Id.* As set forth above (Sections III.E.3.a and III.F.3.a above), Petitioner does not provide sufficient explanation as to how or why Chen's converter operating at the resonant period and frequency teaches the "standard converter operating cycle, having a standard operating period and frequency," and Petitioner does not provide sufficient explanation as to its inherency position. In addition, we agree with Patent Owner that Chen teaches that its operating frequency is different from the resonant frequency. Ex. 1010, 3:38–42 ("The operating frequency fop changes with the circuit parameters and the load state, but the resonance frequency fr1 is determined by the magnitudes of the resonance capacitor Cr and the resonance inductor Lr.").

b) Limitations 1[d] and 1[e]

Petitioner argues that Chen in combination with AAPA renders obvious limitations 1[d] and 1[e]. Pet. 61–62. Petitioner argues that "Chen discusses zero current switching on the secondary switches." *Id.* at 61 (citing Ex. 1010, 5:51–63). In addition, Petitioner argues that the AAPA "teaches that zero voltage and zero current switching can be used to turn the primary [and secondary] switches on and off." *Id.* at 61–62 (citing Ex. 1001, 1:28–32, 1:36–43, 1:66–2:3; Ex. 1009, 9:25–29; Ex. 1003 ¶¶ 136–139).

Petitioner argues that a person of ordinary skill in the art "would have been motivated to combine Chen with the AAPA for purposes of zero current and zero voltage switching because both are related to resonant converters, and Chen contemplates zero current and zero voltage switching, which the AAPA explicitly teaches." Pet. 57 (citing Ex. 1003 ¶ 127). Petitioner contends that a person of ordinary skill in the art "would have

understood and expected that the AAPA's teachings, which were generally known in the prior art, would apply to Chen's resonant converter, and would have looked to the AAPA for additional details related to zero current and zero voltage switching." *Id.* at 57–58.

Patent Owner argues that Petitioner has "deceptively edited" the disclosure in Chen in its citation to column 5, lines 51–63. Prelim. Resp. 57. Patent Owner argues that this passage in Chen "indicates that the MOSFET is turned ON and OFF repeatedly *while secondary current is flowing*." *Id.* at 58 (citing Ex. 1010, 5:51–63). Patent Owner argues that this teaches away from the invention because "[t]he point of ZCS operation is to avoid current flowing in the MOSFET channel during switch transitions." *Id.* at 58–59 (citing Ex. 2001 ¶ 130). In addition, Patent Owner argues that the cited portion of Chen is discussing secondary-side switch, not the primary-side switch, as required by limitation 1[d], and is also in Chen's Background section and refers to the prior art. *Id.* at 59 (citing Ex. 2001 ¶ 131; Ex. 1001, 5:11–16). Patent Owner also argues that Petitioner has not provided sufficient motivation to combine the references with a reasonable expectation of success. *Id.* at 40–45, 59–60 (citing, e.g., Ex. 1003 ¶ 132).

We agree with Patent Owner that Petitioner's showing for limitations 1[c] and 1[d] is deficient. Although Petitioner states that "Chen contemplates . . . zero voltage switching," (Pet. 57) Petitioner does not identify or address any disclosure or contemplation of zero voltage switching in Chen, as is recited in limitation 1[d]. Rather, Petitioner only identifies zero current switching on the secondary switches in Chen. *See* Pet. 61 (discussing limitation 1[d], stating "Chen discusses zero current switching on the secondary switches"). Aside from this, Petitioner relies on

the same motivation to combine Chen with AAPA as in the Shimada/AAPA challenge discussed above, relying in part on this unsupported contention. *See id.* at 57–58. For the same reasons as discussed in Section III.E.3.b, we determine that Petitioner does not sufficiently explain, let alone with particularity, what would motivate a person of ordinary skill in the art to combine Chen and AAPA with a reasonable expectation of success.

c) Conclusion Regarding Independent Claim 1

Petitioner thus fails to meet the burden required to support institution of *inter partes* review of independent claim 1. For the reasons set forth above, we determine that the information presented in the Petition does not demonstrate a reasonable likelihood that claim 1 is unpatentable under 35 U.S.C. § 103 over the combination of Chen and AAPA.

3. Dependent Claim 22

Petitioner contends that the combination of Chen and AAPA also teaches the limitations of claim 22, which depends from claim 1. Therefore, for the same reasons as set forth for claim 1, Petitioner does not demonstrate a reasonable likelihood that claim 22 is unpatentable under 35 U.S.C. § 103 over the combination of Chen and AAPA.

G. *Alleged Obviousness Over Pan, TI UCD3138 or TI UCD3040, and AAPA*

Petitioner contends that claims 1, 22, and 31–35 would have been obvious over the combination of Pan, TI UCD3138 or TI UCD3040, and AAPA. Pet. 66–93. Having considered the arguments and evidence before us, we are not persuaded that Petitioner has established a reasonable likelihood that it would prevail with respect to at least one challenged claim in this ground.

1. Pan (Ex. 1011)

Pan is titled "Secondary-side Adaptive Digital Controlled Series Resonant DC-DC Converters for Low Voltage High Current Applications," and is generally directed to a secondary-side controlled series resonant converter with capacitor type filter. Ex. 1011, 711.

Pan describes:

> Series resonant DC/DC converters with constant switching frequency control are utilized. The main stage on the primary side of the transformer could be either half bridge or full bridge with L-C series resonant tank. The secondary side is a central-tapped full-wave rectifier. The control method could be the conventional PWM control, phase-shift control or asymmetrical PWM control.

Ex. 1011, 712. Pan describes two main switches (M_1, M_2) and two secondary switches (S_1, S_2) that "operate in PWM control mode against load variations." *Id.* Figure 2, reproduced below, shows "typical steady state operating waveforms." *Id.*

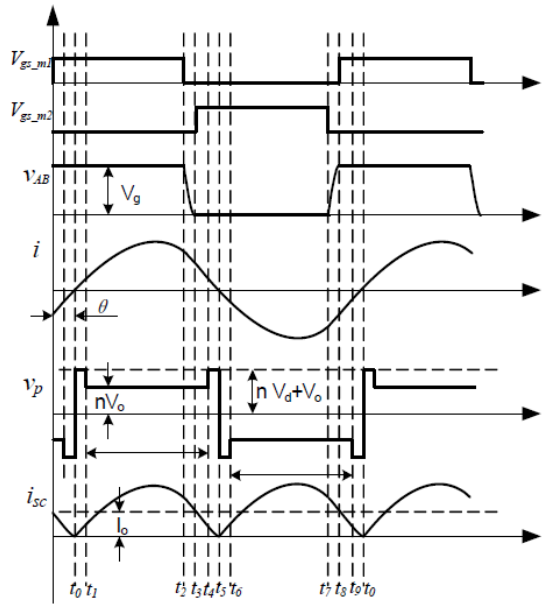

Figure 2. The typical steady state operating waveforms

Figure 2, above, is a waveform diagram showing the typical steady state operating waveforms. *Id.* Pan describes the operation of the converter at each interval. *Id.* at 712–13. For example, "[a]t t_3, M_2 is turned on to achieve zero voltage switching (ZVS) . . . [a]t t_5, the resonant current *i* is going across zero. Current through the body diode of S_2 is diminished to zero . . . [a]t t_8, M_1 is turned on to achieve zero voltage switching (ZVS) . . . [a]t t_0, the resonant current *i* goes across zero. Current through the body diode of S_1 is diminished to zero." *Id.*

2. TI UCD3040 (Ex. 1018)

TI UCD3040 is a data sheet for UCD3040, UCD3028, and UCD3020 "Digital Power Controllers." Ex. 1018, 1. These are described as "members of a family of digital PWM controllers . . . providing a single-chip control solution for digital power-conversion applications." *Id.* at 2. In addition, they are "fully programmable solutions that are configurable to support a wide range of isolated and non-isolated topologies in single- or multiphase configurations . . . [including] half-bridge, phase-shifted full bridge, active clamp, and resonant LLC." *Id.*

3. Analysis of Independent Claim 1

Petitioner contends that the combination of Pan, TI UCD3138 or TI UCD3140, and AAPA teaches the limitations of independent claim 1. Pet. 66–77. In particular, Petitioner relies on the combination of Pan and TI UCD3138 or TI UCD3140 to teach limitation 1[c], and on the combination of Pan and AAPA to teach limitations 1[d] and 1[e]. *Id.* at 72–75. We address these limitations below.

a) Limitation 1[c]

Petitioner argues that Pan in combination with TI UCD3138, or, alternatively, TI UCD3040 renders limitation 1[c] obvious. Pet. 72–73. Petitioner contends that Pan's Figure 11 "shows use of timing control signals (DPWM) to control both the primary switches (Main Switches) and the secondary switches (Synchronous Switches)." *Id.* at 72 (citing Ex. 1011, Fig. 11). Petitioner further contends that "TI UCD3138 and TI UCD3040 both teach that each DPWM can control different timing events." *Id.* at 72–73 (citing Ex. 1006, 28; Ex. 1018, 31). Petitioner further asserts that "[t]he converter in Pan inherently operates at [a] resonant period and frequency to achieve ZVS and ZCS." *Id.* (citing Ex. 1003 ¶ 160). Dr. Hopkins' cited testimony repeats the contentions in the Petition, and adds that "Pan discusses achieving ZVS, and this requires a resonant frequency." Ex. 1003 ¶ 160.

Patent Owner argues that the Petition is incorrect that Pan inherently operates at a resonant frequency. Prelim. Resp. 67–68. Rather, Patent Owner argues, Pan's operating frequency is not the resonant frequency. *Id.* (citing, e.g., Ex. 1011, 4–5[21]; Ex. 2001 ¶¶ 148–149). Patent Owner contends that Dr. Hopkins "conflates the operating frequency with the resonant frequency," and the two are not the same. *Id.* at 69 (citing Ex. 1003 ¶ 160; Ex. 2001 ¶ 150; Ex. 1011, 4–5). Therefore, Patent Owner argues, "the Petition's inherency argument fails." *Id.*

Petitioner does not sufficiently explain how Pan teaches limitation 1[c] for the same reasons as set forth in the challenges above (Sections

[21] Patent Owner's citations are to Petitioner's pagination of Exhibit 1011, which correspond to pages 714 and 715 of Pan.

III.D.3.a, III.E.3.a). That is, Petitioner does not provide sufficient explanation as to how or why Pan's converter operating at the resonant period and frequency teaches the "standard converter operating cycle, having a standard operating period and frequency," and Petitioner does not provide sufficient explanation as to its inherency position. We also are persuaded by Patent Owner's arguments that Pan teaches that the operating frequency is different from the resonant frequency. *See* Ex. 1011, 714–715.

b) Limitations 1[d] and 1[e]

Petitioner argues that Pan in combination with AAPA renders obvious limitations 1[d] and 1[e]. Pet. 73–74. Petitioner argues that "Pan discusses zero voltage switching on the primary switches." *Id.* (citing Ex. 1011, 712, 713). Petitioner also argues that "Pan discusses the switching of the secondary switches when the resonant current is near zero." *Id.* at 74 (citing Ex. 1011, 713). In addition, Petitioner argues that AAPA "teaches that zero voltage and zero current switching can be used to turn the primary [and secondary] switches on and off." *Id.* at 73–74 (citing Ex. 1001, 1:28–32, 1:36–43, 1:66–2:3; Ex. 1009, 9:25–29; Ex. 1003 ¶¶ 136–139).

Petitioner argues that a person of ordinary skill in the art "would also have been motivated to combine Pan with the AAPA for purposes of zero current and zero voltage switching because both are related to resonant converters, and Pan contemplates zero current and zero voltage switching, which the AAPA explicitly teaches." Pet. 67 (citing Ex. 1003 ¶ 151). Petitioner contends that a person of ordinary skill in the art "would therefore have understood and expected that the AAPA's teachings, which were generally known in the prior art, would apply to Pan's resonant converter, and would have looked to the AAPA for additional details related to zero

current and zero voltage switching." *Id.* Petitioner also argues that TI UCD3138 and TI UCD3040 relate to or discuss resonant converters and contemplate zero current and zero voltage switching. *Id.* at 67–68 (citing Ex. 1006, 7; Ex. 1018, 2; Ex. 1003 ¶ 151).

Patent Owner argues that Pan does not teach zero current switching for its primary-side switches. Prelim. Resp. 69–71 (citing Ex. 1011, 2, Fig. 2; Ex. 2001 ¶¶ 151–152). Patent Owner also argues that "Pan cannot use, and it would not have been obvious to use, secondary-side ZVS and ZCS." *Id.* at 71 (citing Ex. 2001 ¶ 154). Patent Owner also argues that Petitioner has not provided sufficient motivation to combine Pan with AAPA with a reasonable expectation of success. *Id.* at 40–45, 60–67 (citing, e.g., Ex. 1003 ¶ 136). Patent Owner argues that the modification with AAPA "is particularly inappropriate for Pan" because "Pan *intentionally* sacrifices ZVS/ZCS on the secondary side in order to achieve a faster transient response." *Id.* at 61 (citing Ex. 1011, 1; Ex. 2001 ¶ 138); *see id.* at 62–66.

We agree with Patent Owner that Petitioner's showing for limitations 1[c] and 1[d] is deficient. Petitioner does not assert that Pan discloses zero current switching for its primary-side switches or zero voltage switching for its secondary-side switches. Petitioner, therefore, relies entirely on the combination with AAPA to teach these claim limitations, but, similar to the Shimada/AAPA challenge above, does not provide any explanation as to the modifications that would need to be made to Pan. Petitioner relies on the same motivation to combine Pan with AAPA as in the Shimada/AAPA challenge discussed above. Therefore, for the same reasons as discussed in Section III.E.3.b, we determine that Petitioner does not sufficiently explain

what would motivate a person of ordinary skill in the art to combine Pan and AAPA with a reasonable expectation of success.

c) Conclusion Regarding Independent Claim 1

Petitioner thus fails to meet the burden required to support institution of *inter partes* review of independent claim 1. For the reasons set forth above, we determine that the information presented in the Petition does not demonstrate a reasonable likelihood that claim 1 is unpatentable under 35 U.S.C. § 103 over the combination of Pan, TI UCD3138 or TI UCD3140, and AAPA.

4. Remaining Claims

Petitioner contends that the combination of Pan, TI UCD3138 or TI UCD3140, and AAPA also teaches the limitations of claims 22 and 31–35, all of which depend from claim 1. Therefore, for the same reasons as set forth for claim 1, Petitioner does not demonstrate a reasonable likelihood that claims 22 and 31–35 are unpatentable under 35 U.S.C. § 103 over the combination of Pan, TI UCD3138 or TI UCD3140, and AAPA.

H. *Alleged Obviousness Over Peng, TI UCD3138 or TI UCD3040, and AAPA*

Petitioner contends that claims 1, 22, and 31–35 would have been obvious over the combination of Peng, TI UCD3138 or TI UCD3040, and AAPA. Pet. 93–106. Having considered the arguments and evidence before us, we are not persuaded that Petitioner has established a reasonable likelihood that it would prevail with respect to at least one challenged claim in this ground.

1. Peng (Ex. 1012)

Peng is titled "Isolated and Soft-Switched Power Converter" and is generally directed to "[a]n isolated and soft-switched power converter [that] is used for DC/DC and DC/DC/AC power conversion." Ex. 1012, codes (54), (57).

Figure 5, reproduced below, "is a block diagram of an isolated and soft switched power converter." Ex. 1012, 8:34–35.

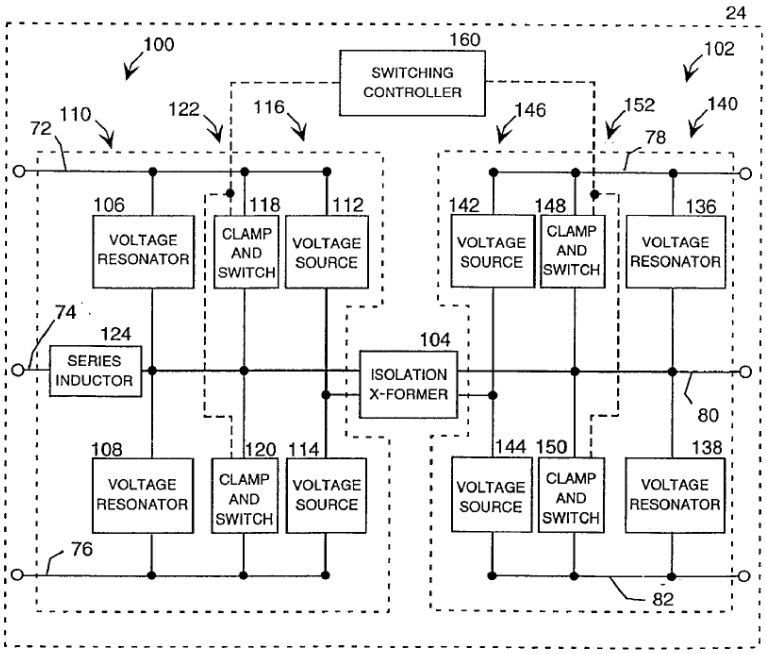

FIG. 5

Figure 5, above, shows power converter 24 including primary resonant tank circuit 100 and secondary resonant tank circuit 102 coupled back-to-back through isolation transformer 104. Ex. 1012, 14:14–19. Primary resonant tank circuit 100 includes, among other things, resonant capacitances 106 and 108 and voltage clamping and switching devices 118 and 120. *Id.* at 14:19–24. Secondary resonant tank circuit 102 includes, among other things, resonant capacitances 136 and 138 and voltage

clamping and switching devices 148 and 150. *Id.* at 14:30–34. "[P]ower converter 24 also includes a switching controller 160 for gating the switching elements 118, 120, 148, and 150," and "may be a circuit to generate a proper gating sequence to achieve soft-switching and output power (or voltage) control." *Id.* at 14:37–41.

Figure 6, reproduced below, "is a schematic diagram of an illustrative embodiment of an isolated and soft switched power converter." Ex. 1012, 8:36–37.

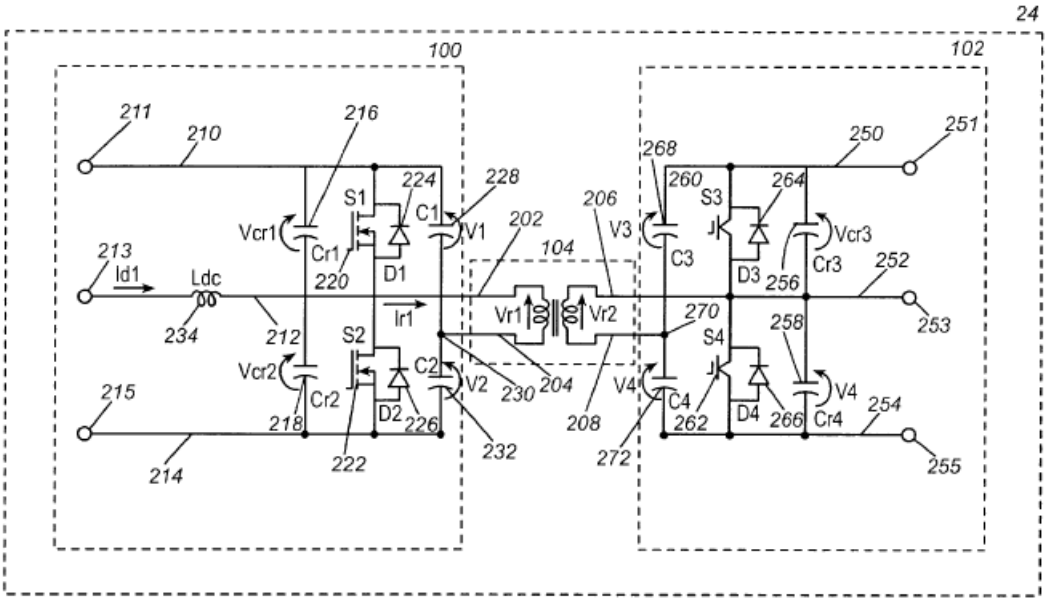

FIG. 6

Figure 6, similar to Figure 5, shows primary resonant tank circuit 100 and secondary resonant tank circuit 102 coupled back-to-back through an isolation transformer 104. Ex. 1012, 15:13–15. Primary resonant tank circuit 100 includes, among other things, primary resonant switches 220 and 222 (S1 and S2, both MOSFET). *Id.* at 15:27–31. Secondary resonant tank circuit 102 includes, among other things, secondary resonant switches 260 and 262 (S3 and S4, both IGBT (insulated-gate bipolar transistor)). *Id.*

at 15:8–61. Peng describes that "[t]he switches S1 and S2 are zero-voltage turn-off and zero-current zero-voltage turn on." *Id.* at 16:28–30.

2. Analysis of Independent Claim 1

Petitioner contends that the combination of Peng, TI UCD3138 or TI UCD3040, and AAPA teaches the limitations of independent claim 1. Pet. 93–102. In particular, Petitioner relies on the combination of Peng and TI UCD3138 or TI UCD3040 to teach limitation 1[c], and on the combination of Peng and AAPA to teach limitations 1[d] and 1[e]. *Id.* at 98–100. We address these limitations below.

a) Limitation 1[c]

Petitioner argues that Peng in combination with TI UCD3138, or, alternatively, TI UCD3040 renders limitation 1[c] obvious. Pet. 98–99. Petitioner contends that "Peng teaches use of a switching controller 160 to generate gating signals to control the switching elements." *Id.* at 98 (citing Ex. 1012, 14:37–42, Fig. 5). Petitioner further contends that "TI UCD3138 and TI UCD3040 are both digital controllers that can be used in Peng's switching controller 160, and both teach that each DPWM can control different timing events." *Id.* (citing Ex. 1006, 28; Ex. 1018, 31). Petitioner further asserts that "[t]he converter in Peng inherently operates at [a] resonant period and frequency to achieve ZVS and ZCS." *Id.* at 99 (citing Ex. 1003 ¶ 202).

Patent Owner's arguments are generally the same as set forth for the other challenges above. Prelim. Resp. 74–75. Furthermore, Patent Owner argues that "Peng does not achieve ZVS and ZCS, but rather only ZVS for some switches under some circumstances," so Petitioner's inherency argument fails. *Id.* at 74 (citing Ex. 2001 ¶ 165).

Petitioner does not explain sufficiently how Peng teaches limitation 1[c] for the same reasons as set forth in the challenges above (Sections III.D.3.a, III.E.3.a). That is, Petitioner does not provide sufficient explanation as to how or why Peng's converter operating at the resonant period and frequency teaches the "standard converter operating cycle, having a standard operating period and frequency," and Petitioner does not provide sufficient explanation as to its inherency position.

b) Limitations 1[d] and 1[e]

Petitioner argues that Peng in combination with AAPA renders obvious limitations 1[d] and 1[e]. Pet. 99–100. Petitioner argues that "Peng discusses zero voltage and zero current switching on the primary switches." *Id.* at 99 (citing Ex. 1012, 16:27–29). Petitioner also argues that "Peng discusses achieving soft-switching of its switches, which a [person of ordinary skill in the art] understands is turning devices on and off at zero or nearly zero voltage or current." *Id.* at 100 (citing Ex. 1012, 14:37–42; Ex. 1003 ¶ 206). In addition, Petitioner argues that AAPA "teaches that zero voltage and zero current switching can be used to turn the primary [and secondary] switches on and off." *Id.* at 99–100 (citing Ex. 1001, 1:28–32, 1:36–43, 1:66–2:3; Ex. 1009, 9:25–29; Ex. 1003 ¶¶ 136–139).

Petitioner argues that a person of ordinary skill in the art "would also have been motivated to combine Peng with the AAPA for purposes of zero current and zero voltage switching because both are related to resonant converters, and Peng contemplates zero current and zero voltage switching (Ex. 1012, 16:23–29), which the AAPA explicitly teaches." Pet. 94 (citing Ex. 1003 ¶ 194). Petitioner contends that a person of ordinary skill in the art "would therefore have understood and expected that the AAPA's teachings,

which were generally known in the prior art, would apply to Peng's resonant converter, and would have looked to the AAPA for additional details related to zero current and zero voltage switching." *Id.* Petitioner also argues that TI UCD3138 and TI UCD3040 relate to or discuss resonant converters and contemplate zero current and zero voltage switching. *Id.* (citing Ex. 1006, 7; Ex. 1018, 2; Ex. 1003 ¶ 194).

Patent Owner argues that "[t]he lack of a proper motivation and reasonable expectation of success is . . . particularly egregious . . . and the combination does not meet several elements of the claims." Prelim. Resp. 71 (citing Ex. 2001 ¶ 157); *see id.* at 40–45. Patent Owner argues that the combination would have been contrary to Peng's principal of operation because Peng is a bi-directional converter that causes switching to occur on only one side of the transformer (i.e., either only the primary or only the secondary side) at a time. *Id.* at 72–73 (citing, e.g., Ex. 1012, 16:64–17:5; Figs. 14–21; Ex. 2001 ¶¶ 159–160). According to Patent Owner, it would not have been obvious to modify Peng with AAPA because a person of ordinary skill in the art "would have been required to have both the primary- and secondary-side switches turning ON and OFF in a standard operating cycle." *Id.* at 74 (citing Ex. 2001 ¶ 162). Furthermore, Patent Owner argues that "Peng excludes turning the switch OFF at zero current." Prelim. Resp. 76 (citing Ex. 2001 ¶ 168).

We agree with Patent Owner that Petitioner's showing for limitations 1[c] and 1[d] is deficient. As with the other challenges discussed above, Petitioner's contentions lack sufficient explanation as to the combination, and generally rely on bare citations to the references. For instance, as Patent Owner points out, Peng does not disclose zero-current turn OFF. *See*

Ex. 1012, 16:28–30 ("The switches S1 and S2 are zero-voltage turn-off and zero-current zero-voltage turn-on."). Petitioner appears to rely on Peng's general disclosure of "soft-switching," combined with AAPA, but again does not provide any explanation as to the modifications that would need to be made to Peng. Petitioner relies on the same motivation to combine Peng with AAPA as in the Shimada/AAPA challenge discussed above. Therefore, for the same reasons as discussed in Section III.E.3.b, we determine that Petitioner does not explain sufficiently what would motivate a person of ordinary skill in the art to combine Peng and AAPA with a reasonable expectation of success.

c) Conclusion Regarding Independent Claim 1

Petitioner thus fails to meet the burden required to support institution of *inter partes* review of independent claim 1. For the reasons set forth above, we determine that the information presented in the Petition does not demonstrate a reasonable likelihood that claim 1 is unpatentable under 35 U.S.C. § 103 over the combination of Peng, TI UCD3138 or TI UCD3140, and AAPA.

3. Remaining Claims

Petitioner contends that the combination of Peng, TI UCD3138 or TI UCD3140, and AAPA also teaches the limitations of claims 22 and 31–35, all of which depend from claim 1. Therefore, for the same reasons as set forth for claim 1, Petitioner does not demonstrate a reasonable likelihood that claims 22 and 31–35 are unpatentable under 35 U.S.C. § 103 over the combination of Peng, TI UCD3138 or TI UCD3140, and AAPA.

I. *Alleged Obviousness Over Leung and AAPA*

Petitioner contends that claims 1 and 22 would have been obvious over the combination of Leung and AAPA. Pet. 106–114. Having considered the arguments and evidence before us, we are not persuaded that Petitioner has established a reasonable likelihood that it would prevail with respect to at least one challenged claim in this ground.

1. Leung (Ex. 1013)

Leung is titled "Digital PWM Controller" and is generally directed to "[a] digital controller for controlling the operation of a DC-DC switching converter." Ex. 1013, codes (54), (57).

Figure 1, reproduced below, "illustrates an overall block diagram of a switching power supply." Ex. 1013 ¶ 8.

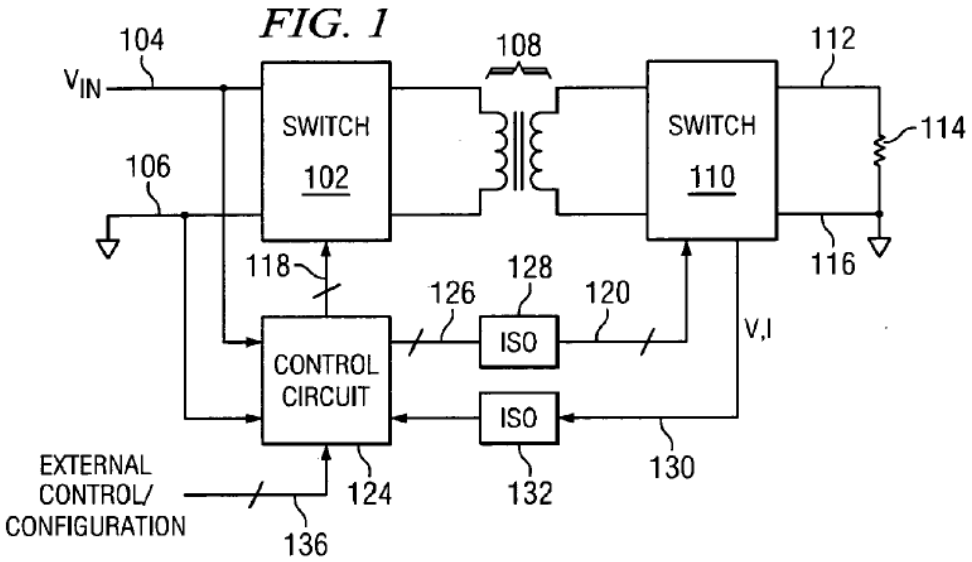

Figure 1, above, depicts primary switch group 102 coupled through isolation transformer 108 to secondary switch group 110. Ex. 1013 ¶ 62. "The two switch groups 102 and 110 are operable to operate in conjunction with various pulse inputs on a control bus 118 associated with the primary

switch group 102 and with various pulse inputs on a control bus 126 associated with the secondary switch group 110." *Id.* Digital control circuit 124 is operable to control the operation of primary switch group 102 and secondary switch group 110. *Id.* ¶ 63.

2. Analysis of Independent Claim 1

Petitioner contends that the combination of Leung and AAPA teaches the limitations of independent claim 1. Pet. 106–113. In particular, Petitioner relies on Leung to teach limitation 1[c], and on the combination of Leung and AAPA to teach limitations 1[d] and 1[e]. *Id.* at 109–112. We address these limitations below.

a) Limitation 1[c]

Petitioner argues that Leung in combination with AAPA renders limitation 1[c] obvious. Pet. 109–111. Petitioner contends that Leung's "digital controller generates timing control signals (switching phases 404) from the DPWM to control the primary and secondary switches." *Id.* at 109–110 (citing Ex. 1013 ¶¶ 71–72). Petitioner further asserts that "[t]he converter in Leung-AAPA[22] inherently operates at [a] resonant period and frequency to achieve ZVS and ZCS." *Id.* at 111 (citing Ex. 1003 ¶ 237). Dr. Hopkins testifies that a person of ordinary skill in the art "would

[22] In the contentions for limitation 1[a], Petitioner appears to acknowledge that Leung does not disclose a "resonant powertrain," and therefore combines Leung with AAPA. *See* Pet. 107 ("The AAPA makes clear that resonant half-bridge converters were well known in the prior art . . . and a [person of ordinary skill in the art] would have known that a resonant circuit could be added [to] Leung's half-bridge converter, which would provide a resonant frequency . . . .") (citing Ex. 1003 ¶¶ 234–235). Dr. Hopkins' cited testimony repeats the contentions in the Petition, without further explanation.

understand that Leung-AAPA's converter operating cycle would have a standard operating period and frequency, which is the resonant period and frequency of the resonant converter because the AAPA discusses achieving ZVS and ZCS, and this requires a resonant frequency." Ex. 1003 ¶ 237.

Patent Owner argues that Petitioner's argument is wrong because Petitioner does not explain how or why it would have been obvious to modify Leung's converter to contain a resonant circuit, and Petitioner contends that this hypothetical new circuit inherently teaches operating at resonant frequency to achieve ZVS and ZCS. Prelim. Resp. 80–81. Furthermore, Patent Owner argues that Petitioner does not make a case for inherency. *Id.* at 81–82.

Petitioner does not sufficiently explain how Leung teaches limitation 1[c] for the same reasons as set forth in the challenges above (Sections III.D.3.a, III.E.3.a). That is, Petitioner does not explain or even address how or why Leung teaches "for each of a plurality of events based upon the clock signals," as recited in limitation 1[c].

Petitioner also appears to rely on the same theory as set forth in the previous challenges discussed above, that the "standard converter operating cycle, having a standard operating period and frequency," is taught by operation of the Leung-AAPA resonant converter at a resonant period and frequency. *See* Ex. 1003 ¶ 237. However, here, Petitioner additionally relies upon the combination of Leung and AAPA to teach this limitation. We agree with Patent Owner (Prelim. Resp. 80–81) that Petitioner does not sufficiently explain how or why it would have been obvious to modify Leung's converter to contain a resonant circuit. That is, although a person of ordinary skill in the art may have known that a resonant circuit "could" be

added to Leung, Petitioner does not provide explanation as to why a resonant circuit "would" be added. *Belden Inc. v. Berk-Tek LLC*, 805 F.3d 1064, 1073 (Fed. Cir. 2015) ("[O]bviousness concerns whether a skilled artisan not only *could have made* but *would have been motivated to make* the combinations or modifications of prior art to arrive at the claimed invention"); *see ActiveVideo*, 694 F.3d at 1327 ("[T]he expert's testimony on obviousness was essentially a conclusory statement that a person of ordinary skill in the art would have known, based on the 'modular' nature of the claimed components, how to combine any of a number of references to achieve the claimed inventions. This is not sufficient and is fraught with hindsight bias.").

However, even aside from the deficiencies with the combination, as set forth above (Sections III.E.3.a and III.F.3.a above), Petitioner does not provide sufficient explanation as to how or why the Leung-AAPA converter operating at the resonant period and frequency teaches the "standard converter operating cycle, having a standard operating period and frequency," and Petitioner also does not provide sufficient explanation as to its inherency position.

b) Limitations 1[d] and 1[e]

Petitioner argues that Leung in combination with AAPA renders obvious limitations 1[d] and 1[e]. Pet. 111–112. Petitioner argues that Leung "discusses that the digital control circuit 124 'is operable to control the operation of the primary switch group 102 and the secondary switch group 110.'" *Id.* at 111 (citing Ex. 1013 ¶ 63). Petitioner also argues that AAPA teaches that zero voltage and zero current switching can be used to

turn the primary and secondary switches on and off. *Id.* (citing Ex. 1001, 1:28–32, 1:36–43. 1:66–2:3; Ex. 1009, 9:25–29).

Petitioner argues that a person of ordinary skill in the art "would have been motivated to combine Leung with the AAPA for purposes of zero current and zero voltage switching because both are related to half-bridge converters, and zero current and zero voltage switching was well known in the art, which the AAPA explicitly teaches." Pet. 106–107 (citing Ex. 1003 ¶ 233). Petitioner contends that a person of ordinary skill in the art "would therefore have understood and expected that the AAPA's teachings, which were generally known in the prior art, would apply to Leung's half-bridge converter, and would have looked to the AAPA for additional details related to zero current and zero voltage switching." *Id.* at 107.

Patent Owner argues that Petitioner has not provided sufficient motivation to combine the references and lacks any explanation of why there would have been a reasonable expectation of success. Prelim. Resp. 40–45, 82. Furthermore, Patent Owner argues that "it is not clear how ZVS and ZCS ever could be achieved in Leung's Fig. 2 circuit, because it is a pulse-width-modulated (PWM) circuit." *Id.* at 82 (citing Ex. 1013, Fig. 3, ¶¶ 68–70; Ex. 2001 ¶ 182). According to Patent Owner, "[t]he Petition provides no explanation of how a [person of ordinary skill in the art] would have implemented ZVS <u>and</u> ZCS given the varying ON and OFF times of the switches." *Id.* (citing Ex. 2001 ¶ 182).

We agree with Patent Owner that Petitioner's showing for limitations 1[c] and 1[d] is deficient. Petitioner does not assert that Leung discloses zero voltage or zero current switching in its primary or secondary switch groups. Petitioner, therefore, relies entirely on the combination with AAPA

to teach these claim limitations, but, similar to the Shimada/AAPA challenge above, does not provide any explanation as to the modifications that would need to be made to Leung. Petitioner relies on essentially the same motivation to combine Leung with AAPA as in the Shimada/AAPA challenge discussed above.[23] Therefore, for the same reasons as discussed in Section III.E.3.b, we determine that Petitioner does not explain sufficiently what would motivate a person of ordinary skill in the art to combine Leung and AAPA with a reasonable expectation of success.

c) Conclusion Regarding Independent Claim 1

Petitioner thus fails to meet the burden required to support institution of *inter partes* review of independent claim 1. For the reasons set forth above, we determine that the information presented in the Petition does not demonstrate a reasonable likelihood that claim 1 is unpatentable under 35 U.S.C. § 103 over the combination of Leung and AAPA.

3. Dependent Claim 22

Petitioner contends that the combination of Leung and AAPA also teaches the limitations of claim 22, which depends from claim 1. Therefore, for the same reasons as set forth for claim 1, Petitioner does not demonstrate a reasonable likelihood that claim 22 is unpatentable under 35 U.S.C. § 103 over the combination of Leung and AAPA.

J. *Alleged Obviousness Over AN1336, dsPIC33FJ06GS101, and AAPA*

Petitioner contends that claims 1 and 22 would have been obvious over the combination of AN1336, dsPIC33FJ06GS101, and AAPA. Pet. 114–124. Having considered the arguments and evidence before us, we

[23] Petitioner's reasoning refers to Leung's "half-bridge converters" rather than "resonant converters," as in Shimada. Pet. 106–107

are not persuaded that Petitioner has established a reasonable likelihood that it would prevail with respect to at least one challenged claim in this ground.

1. AN1336 (Ex. 1019)

AN1336 is a datasheet from Microchip Technology Inc. titled "DC/DC LLC Reference Design Using the dsPIC® DSC." Ex. 1019, 1. The datasheet discusses LLC resonant converters and control thereof using Microchip's dsPIC digital signal controllers. *See generally id.*

2. dsPIC33FJ06GS101 (Ex. 1020)

dsPIC33FJ06GS101 is a Microchip datasheet for the dsPIC33FJ06GS101/X02 and DsPIC33FJ16GSX02/X04 digital signal controllers. *See generally* Ex. 1020.

3. Analysis of Independent Claim 1

Petitioner contends that the combination of AN1336, dsPIC33FJ06GS101, and AAPA teaches the limitations of independent claim 1. Pet. 114–121. In particular, Petitioner relies on the combination of AN1336 and dsPIC33FJ06GS101 to teach limitation 1[c], and on the combination of AN1336, dsPIC33FJ06GS101, and AAPA to teach limitations 1[d] and 1[e]. *Id.* at 117–120. We address these limitations below.

a) Limitation 1[c]

Petitioner contends that Figure 46 of AN1336 "shows a dsPIC controller . . . that generates timing control signals to control the primary and secondary switches of the converter." Pet. 117–118 (citing Ex. 1019, 36, Fig. 46). Petitioner further contends that "dsPIC33FJ06GS101 teaches that its timing control signals (PWM outputs) can control different timing events." *Id.* at 118 (citing Ex. 1020, 195). Petitioner further asserts that

"[t]he converter in AN1336 operates at a resonant frequency and period." *Id.* (citing Ex. 1019, 28; Ex. 1003 ¶ 256).

Patent Owner argues that "AN1336 is an LLC resonant converter that *varies* its frequency in order to regulate its output." Prelim. Resp. 84 (citing Ex. 1019, 4); *see also id.* (citing Ex. 1019, 68[24]; Ex. 2001 ¶ 188). According to Patent Owner, "[t]his is standard operation for LLC resonant converters, which exploit frequency-varying impedances to vary the output voltage." *Id.* (citing Ex. 2001 ¶ 188). Patent Owner argues that "[b]ecause the converter varies its frequency to regulate the output voltage, it does not" teach a "standard converter operating cycle, having a standard operating period and frequency." *Id.* at 87; *see id.* at 85–86. Patent Owner also argues that "AN1336 does not state that the converter is operated at the resonant frequency" and Petitioner quotes the reference out of context. *Id.* at 87.

Petitioner does not explain sufficiently how the references teach limitation 1[c]. Petitioner appears to rely on the same theory as set forth in the McDonald/TI UCD3138 challenge (Section III.D.3.a above), that the "standard converter operating cycle, having a standard operating period and frequency," is taught by operation of AN1336's converter at a resonant period and frequency. *See* Pet. 118 (citing Ex. 1019, 28; Ex. 1003 ¶ 256). As in the previous challenges, Dr. Hopkins' testimony merely repeats the contentions in the Petition, without further explanation. Even assuming Petitioner is correct that AN1336's converter may be operated at a resonant frequency, for the same reasons as discussed above in Section III.D.3.a, we find that Petitioner does not sufficiently explain how or why this supports

[24] Patent Owner cites to Ex. 1019, page 1, left column; however, the quoted citation appears on page 68, right column, of Ex. 1019.

that AN1336 and dsPIC33FJ06GS101 teach a "standard converter operating cycle, having a standard operating period and frequency," as recited in limitation 1[c].

b) Limitations 1[d] and 1[e]

Petitioner argues that AN1336 in combination with AAPA renders obvious limitations 1[d] and 1[e]. Pet. 118–120. Petitioner argues that "AN1336 teaches that the primary switches turn on and off with zero voltage switching." *Id.* at 118–119 (citing Ex. 1019, 59–60, Figs. B-9, B-10). Petitioner further argues that "AN1336 teaches that the secondary switches turn on and off with zero current switching." *Id.* at 119–120 (citing Ex. 1019, 61, Fig. B-11). Petitioner also argues that AAPA teaches that zero voltage and zero current switching can be used to turn the primary and secondary switches on and off. *Id.* (citing Ex. 1001, 1:28–32, 1:36–43, 1:66–2:3; Ex. 1009, 9:25–29).

Petitioner argues that a person of ordinary skill in the art "would also have been motivated to combine AN1336 with the AAPA for purposes of zero current and zero voltage switching because both are related to half-bridge resonant converters, and AN1336 contemplates zero current and zero voltage switching, which the AAPA explicitly teaches." Pet. 115 (citing Ex. 1003 ¶¶ 248–249). Petitioner contends that a person of ordinary skill in the art "would therefore have understood and expected that the AAPA's teachings, which were generally known in the prior art, would apply to AN1336's resonant converters, and would have looked to the AAPA for additional details related to zero current and zero voltage switching." *Id.*

Patent Owner argues that Petitioner has not provided sufficient motivation to combine the references and lacks any explanation of why there

would have been a reasonable expectation of success. Prelim. Resp. 40–45, 83. Patent Owner further argues that AN1336 teaches "exactly what was expected" of design of LLC series resonant converters: "ZVS *but no* ZCS for primary-side switches, and ZCS *but no* ZVS for secondary-side switches." *Id.* at 88 (citing Ex. 1019, 59–61; Ex. 2001 ¶ 197).

We agree with Patent Owner that Petitioner's showing for limitations 1[c] and 1[d] is deficient. Petitioner does not assert that AN1336 discloses zero current switching for its primary-side switches or zero voltage switching for its secondary-side switches. Petitioner, therefore, relies entirely on the combination with AAPA to teach these claim limitations, but, similar to the Shimada/AAPA challenge above, does not provide any explanation as to the modifications that would need to be made to AN1336. Petitioner relies on essentially the same motivation to combine AN1336 with AAPA as in the Shimada/AAPA challenge discussed above. Therefore, for the same reasons as discussed in Section III.E.3.b, we determine that Petitioner does not explain sufficiently what would motivate a person of ordinary skill in the art to combine the teachings of AN1336 and AAPA with a reasonable expectation of success.

c) Conclusion Regarding Independent Claim 1

Petitioner thus fails to meet the burden required to support institution of *inter partes* review of independent claim 1. For the reasons set forth above, we determine that the information presented in the Petition does not demonstrate a reasonable likelihood that claim 1 is unpatentable under 35 U.S.C. § 103 over the combination of AN1336, dsPIC33FJ06GS101, and AAPA.

4. Dependent Claim 22

Petitioner contends that the combination of AN1336, dsPIC33FJ06GS101, and AAPA also teaches the limitations of claim 22, which depends from claim 1. Therefore, for the same reasons as set forth for claim 1, Petitioner does not demonstrate a reasonable likelihood that claim 22 is unpatentable under 35 U.S.C. § 103 over the combination of AN1336, dsPIC33FJ06GS101, and AAPA.

IV. MOTION TO SEAL

In connection with the Preliminary Response, Patent Owner filed a Motion to Seal Exhibit 2032 (Paper 8, "Motion"). As part of the Motion, Patent Owner also requests entry of the Stipulated Protective Order, which is attached as Exhibit A to the Motion.[25] Motion 4. The Motion states that the parties have conferred regarding the Motion and the Stipulated Protective Order, that the parties agree to the provisions of the Stipulated Protective Order, and that Petitioner does not oppose the Motion. *Id.* at 5–6.

Patent Owner contends that good cause exists to seal Exhibit 2032. Motion 2–3. According to Patent Owner, Exhibit 2032 includes "highly-sensitive information regarding the structure and operation of certain [of Patent Owner's] products." *Id.* at 2; Ex. 2032. Patent Owner argues that this information is not publicly available, continues to be intended to remain confidential, and Patent Owner will be harmed if the information is released publicly. *Id.* at 2–3.

"There is a strong public policy for making all information filed in a quasi-judicial administrative proceeding open to the public." *Garmin Int'l v.*

[25] Patent Owner also submitted as Exhibit B a redline indicating how the Stipulated Protective Order deviates from the Default Protective Order.

Cuozzo Speed Techs., LLC, IPR2012–00001, Paper 34 at 1–2 (PTAB Mar. 14, 2013). A motion to seal may only be granted on a showing of good cause. 37 C.F.R. § 42.54(a). This standard includes showing that the information addressed in the motion to seal is truly confidential, and that such confidentiality outweighs the strong public interest in having the record open to the public. *See Garmin*, Paper 34 at 2–3. The moving party bears the burden of showing that the relief requested should be granted, and establishing that the information sought to be sealed is confidential information. 37 C.F.R. § 42.20(c).

In reviewing the documents and information that Patent Owner seeks to seal, we observe, as Patent Owner asserts, that the document contains sensitive technical information regarding Patent Owner's products. Motion 2–3. Therefore, after having considered Patent Owner's arguments and the evidence, we determine that Patent Owner has established good cause for sealing Exhibit 2032, which is not cited or relied upon in this Decision. Patent Owner's Motion to Seal is therefore granted.

We have also considered Patent Owner's request for entry of the Stipulated Protective Order, which has been agreed to by the Parties. As shown in Exhibit B to the Motion, the proposed changes to the Board's Default Protective Order are minimal, adding an "Outside Attorneys' Eyes Only" level of designation that restricts certain materials to Outside Counsel, Experts, Office Staff, and Support Personnel. Motion 4, Exhibit B. These changes appear to be justified under the circumstances, for the reasons stated by Patent Owner. Motion 4–5. The Stipulated Protective Order is, therefore, entered, and will control access to confidential materials in this proceeding absent a further order from the Board modifying such access.

We remind the parties that confidential information that is subject to a protective order ordinarily becomes public forty-five days after denial of a petition to institute. *See* Patent Trial and Appeal Board Consolidated Trial Practice Guide (November 2019) 21–22. There is an expectation that information will be made public where the existence of the information is referred to in a decision to grant or deny a request to institute a review. *Id.* at 22. A party seeking to maintain the confidentiality of information, however, may file a motion to expunge the information from the record prior to the information becoming public. *Id.*; 37 C.F.R. § 42.56.

V. CONCLUSION

After considering the evidence and arguments presented in the Petition, we determine Petitioner has not established a reasonable likelihood of prevailing on its assertion that at least one claim of the '481 patent is unpatentable, and we do not institute an *inter partes* review.

VI. ORDER

In consideration of the foregoing, it is hereby:

ORDERED that the Petition is denied and no *inter partes* review is instituted;

FURTHER ORDERED that Patent Owner's Motion to Seal (Paper 8) is granted and Exhibit 2032 is sealed; and

FURTHER ORDERED that the Stipulated Protective Order (Paper 8, Exhibit A) is entered.

For PETITIONER:

Russell E. Levine
Joshua P. Glucoft
Jiaxiao Zhang
KIRKLAND & ELLIS LLP
rlevine@kirkland.com
joshua.glucoft@gmail.com
jiaxiao.zhang@kirkland.com

For PATENT OWNER:

Matthew A. Smith
Andrew S. Baluch
Amy Greywitt
Elizabeth Laughton
SMITH BALUCH LLP
smith@smithbaluch.com
baluch@smithbaluch.com
greywitt@smithbaluch.com
laughton@smithbaluch.com