US 20080231228A1

(19) United States

(12) Patent Application Publication

(10) Pub. No.: US 2008/0231228 A1

(43) Pub. Date: Sep. 25, 2008

Fowler et al.

(54) BI-DIRECTIONAL CHARGING/INTEGRATED POWER MANAGEMENT UNIT

(75) Inventors: **Doug Fowler**, Plano, TX (US); **Dan McQuitty**, Plano, TX (US); **Chris Hartwell**, Plano, TX (US); **James E. Gibbons**, Plano, TX (US)

Correspondence Address:
CONLEY ROSE, P.C.
5601 GRANITE PARKWAY, SUITE 750
PLANO, TX 75024 (US)

(73) Assignee: **Media Cart Holdings, Inc.**, Plano, TX (US)

(21) Appl. No.: **11/690,839**

(22) Filed: **Mar. 25, 2007**

Publication Classification

(51) **Int. Cl.**
H02J 7/00 (2006.01)

(52) **U.S. Cl.** **320/107**

(57) **ABSTRACT**

A media enhanced shopping cart system comprises a shopping cart comprising a frame, a basket, a handle, a base tray, a plurality of wheels, a read component for performing a proximity scan of the shopping cart, a locationing component for determining a location of the shopping cart within a store based on the scan, and a display component for displaying at least one advertisement for a product based on the location of the shopping cart within the store, wherein the locationing component is further operable to determine a location of the product within the store relative to the shopping cart based on the scan, and wherein the display component is further operable to display an indication of the location of the advertised product relative to the location of the shopping cart.

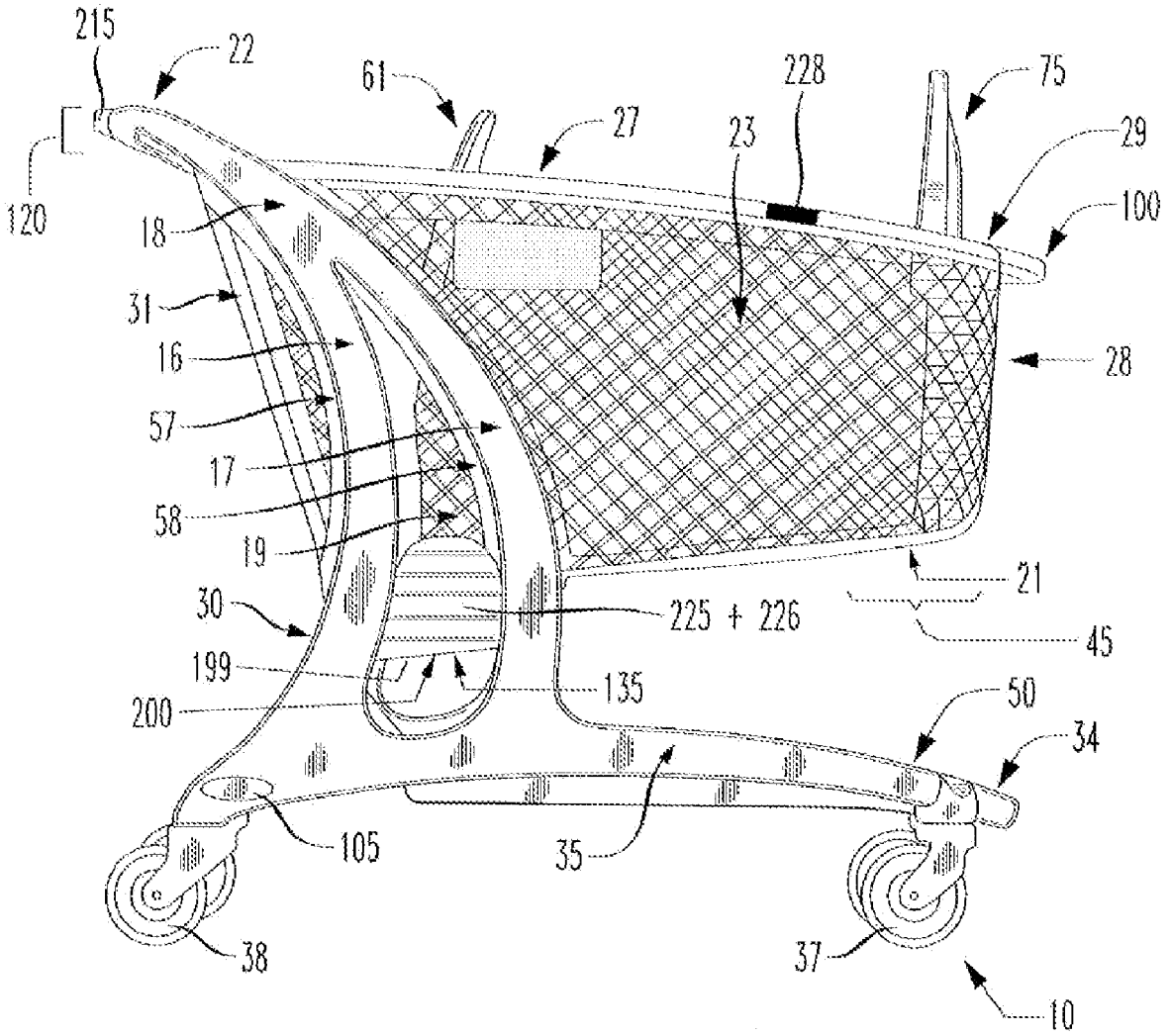

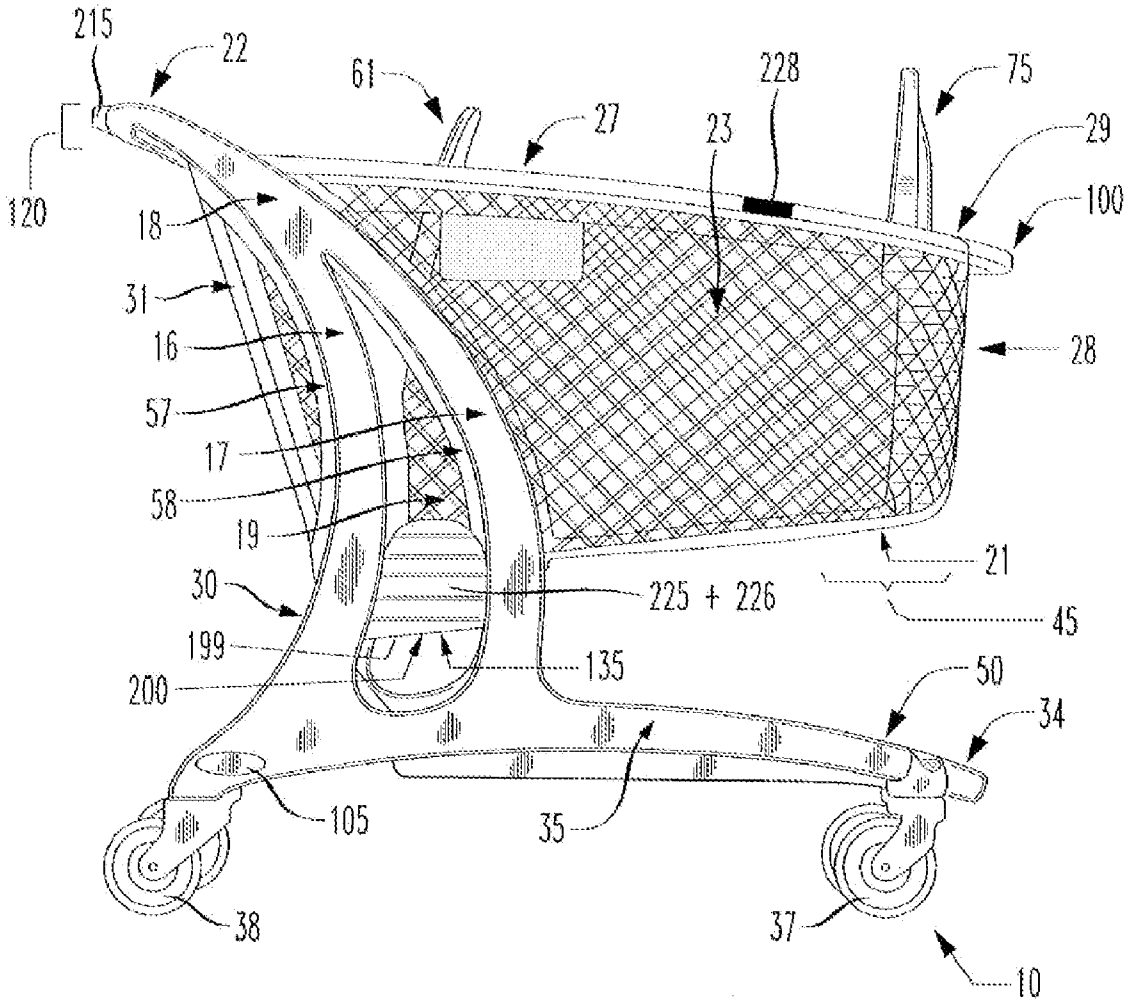
215
22
61
228
75
27
23
29
120
18
100
31
16
28
57
17
58
19
21
30
225 + 226
45
199
135
200
50
34
105
35
38
37
10

FIG. 1

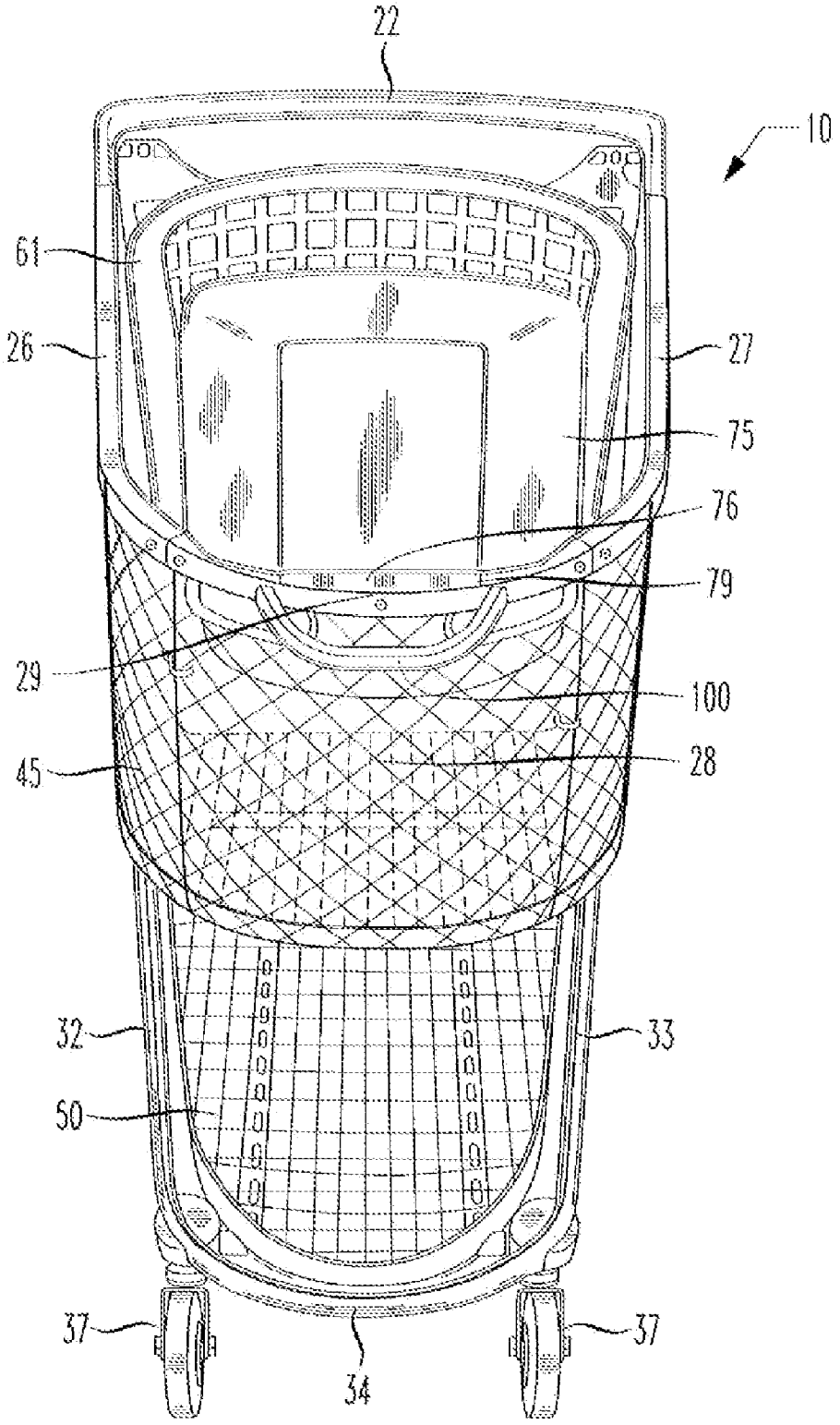

FIG. 2

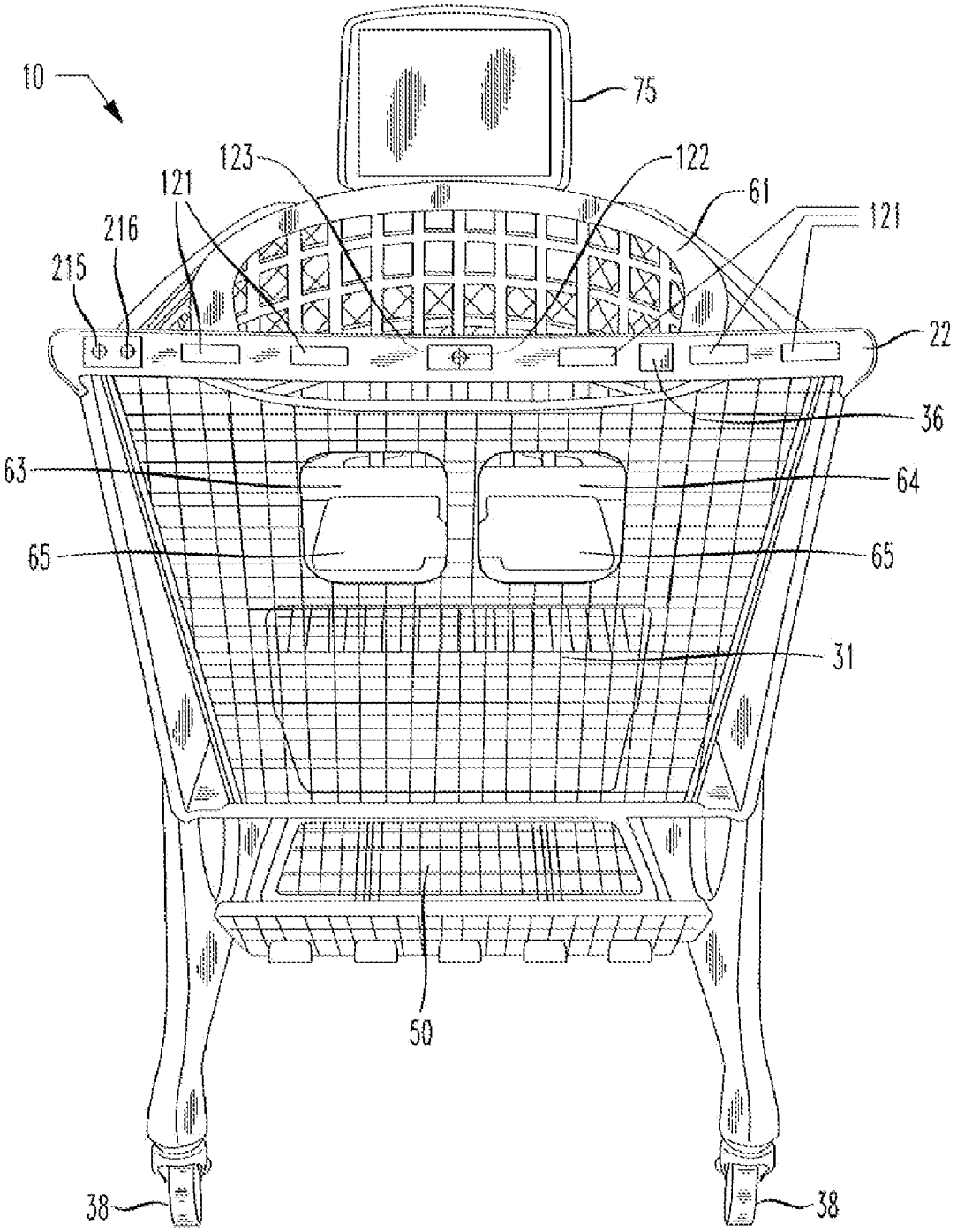

FIG. 3A

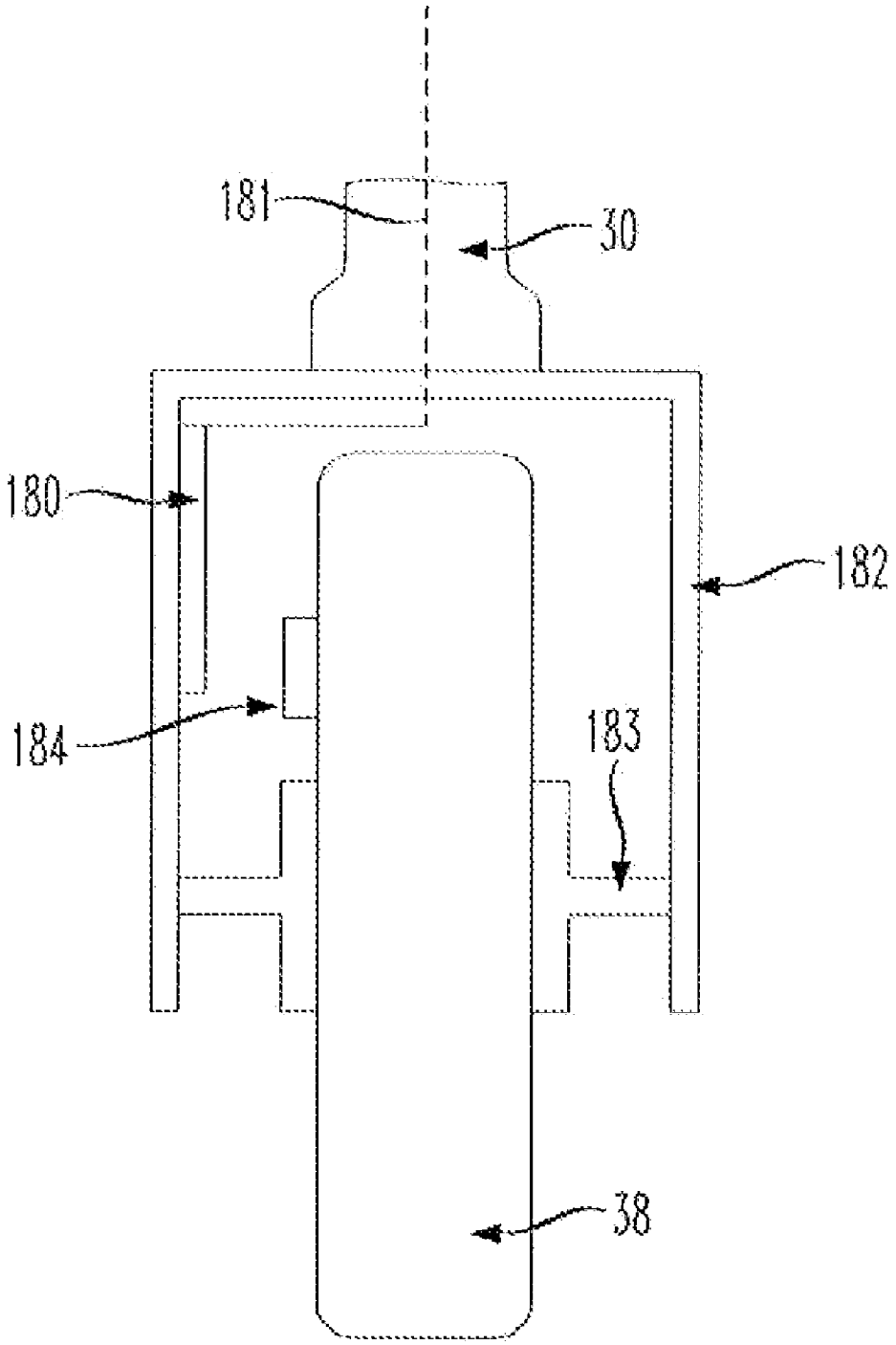

FIG. 3B

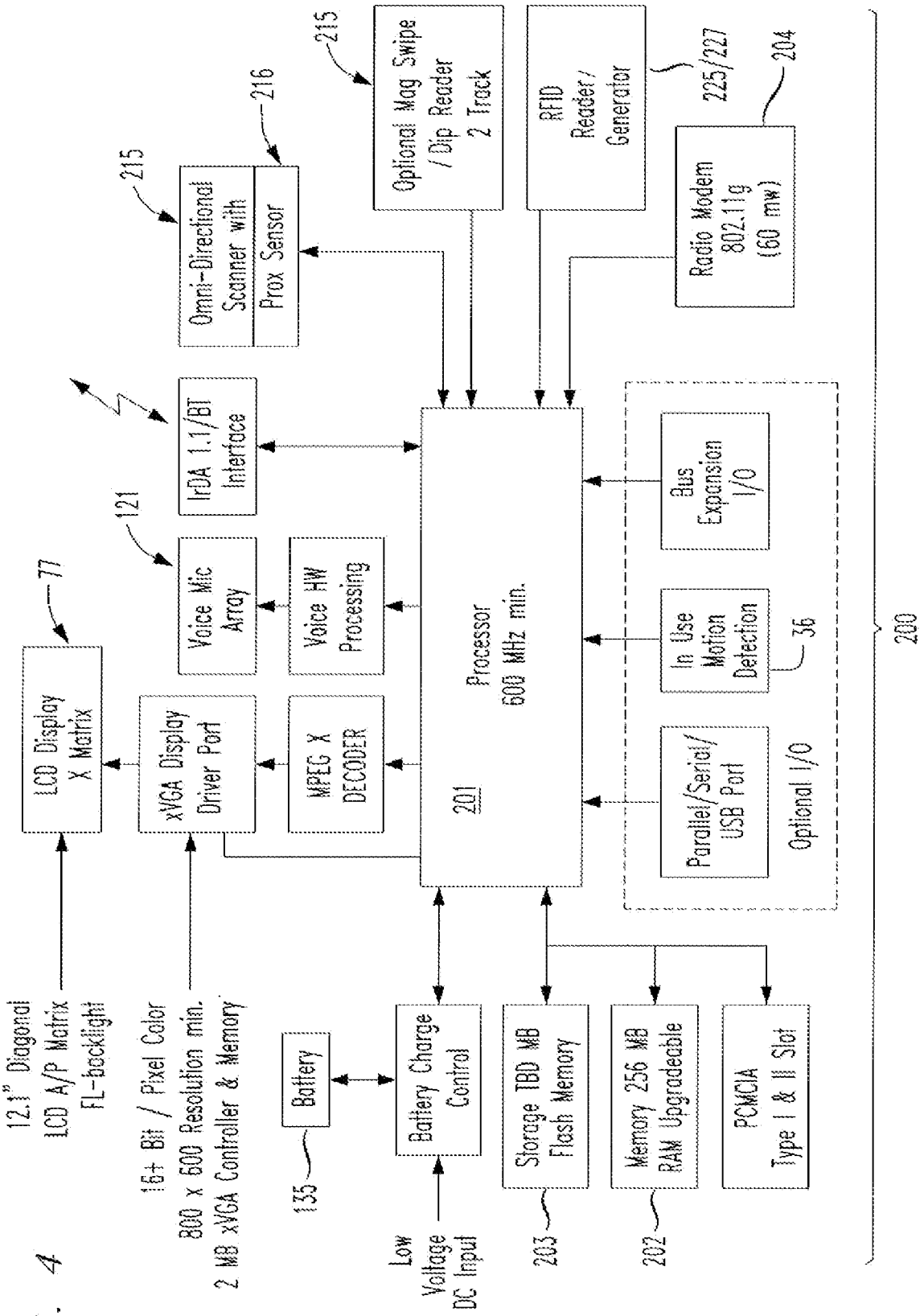
Optional Mag Swipe / Dip Reader 2 Track
215
RFID Reader / Generator
225/227
204
Omni-Directional Scanner with Prox Sensor
216
215
Radio Modem 802.11g (60 mw)
IrDA 1.1/BT Interface
121
Voice Mic Array
Voice HW Processing
77
LCD Display X Matrix
xVGA Display Driver Port
MPEG X DECODER
Processor 600 MHz min.
201
Bus Expansion I/O
In Use Motion Detection
36
Parallel/Serial/ USB Port
Optional I/O
200
12.1" Diagonal LCD A/P Matrix FL-backlight
16+ Bit / Pixel Color 800 x 600 Resolution min. 2 MB xVGA Controller & Memory
Battery
135
Battery Charge Control
Low Voltage DC Input
Storage TBD MB Flash Memory
203
Memory 256 MB RAM Upgradeable
202
PCMCIA Type I & II Slot

FIG. 4

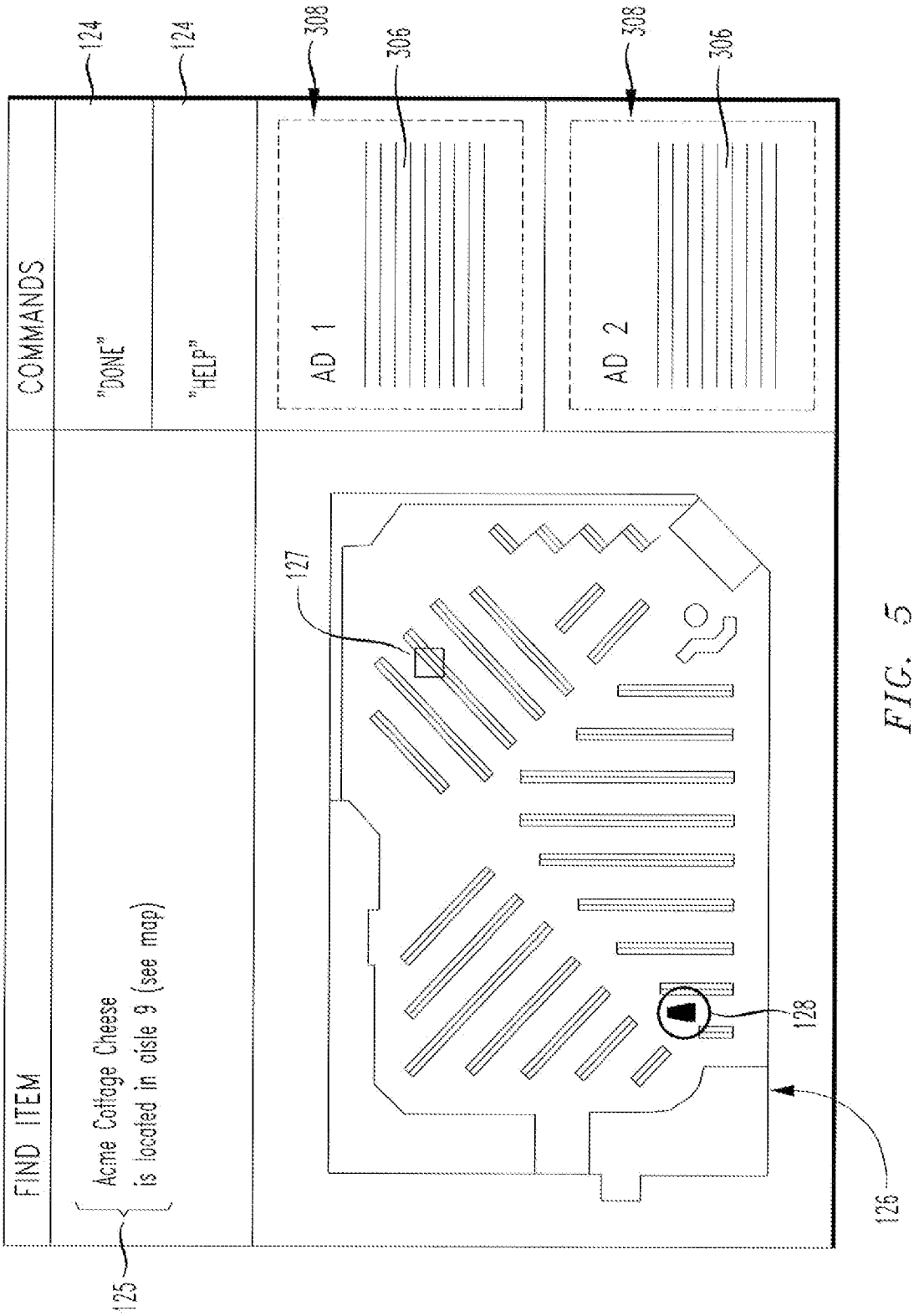
COMMANDS
"DONE"
"HELP"
124
124
308
306
308
306
AD 1
AD 2
FIND ITEM
Acme Cottage Cheese
is located in aisle 9 (see map)
125
127
128
126

FIG. 5

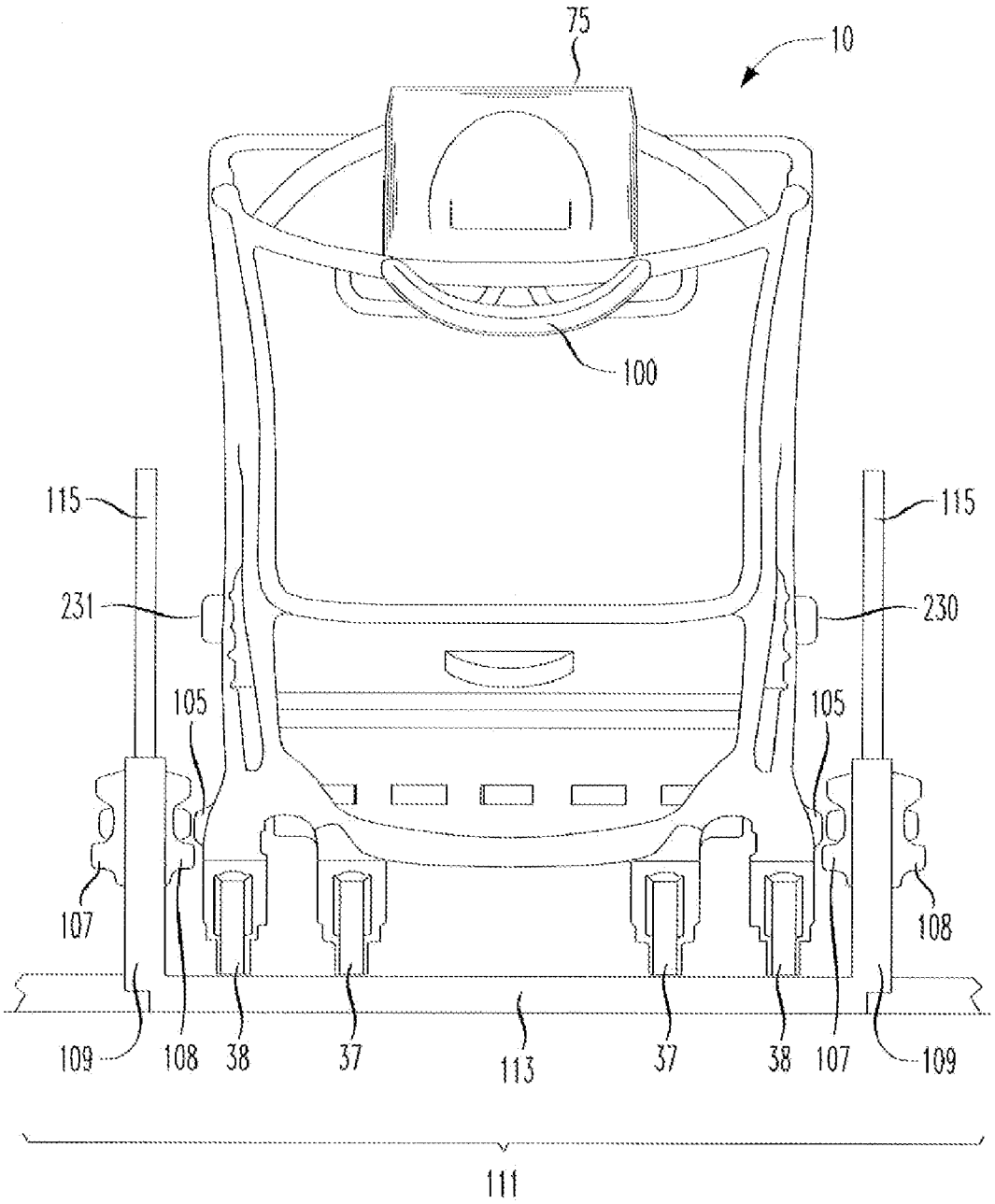
75
10
100
115
115
231
230
105
105
107
108
109
108
38
37
113
37
38
107
109
111

FIG. 6

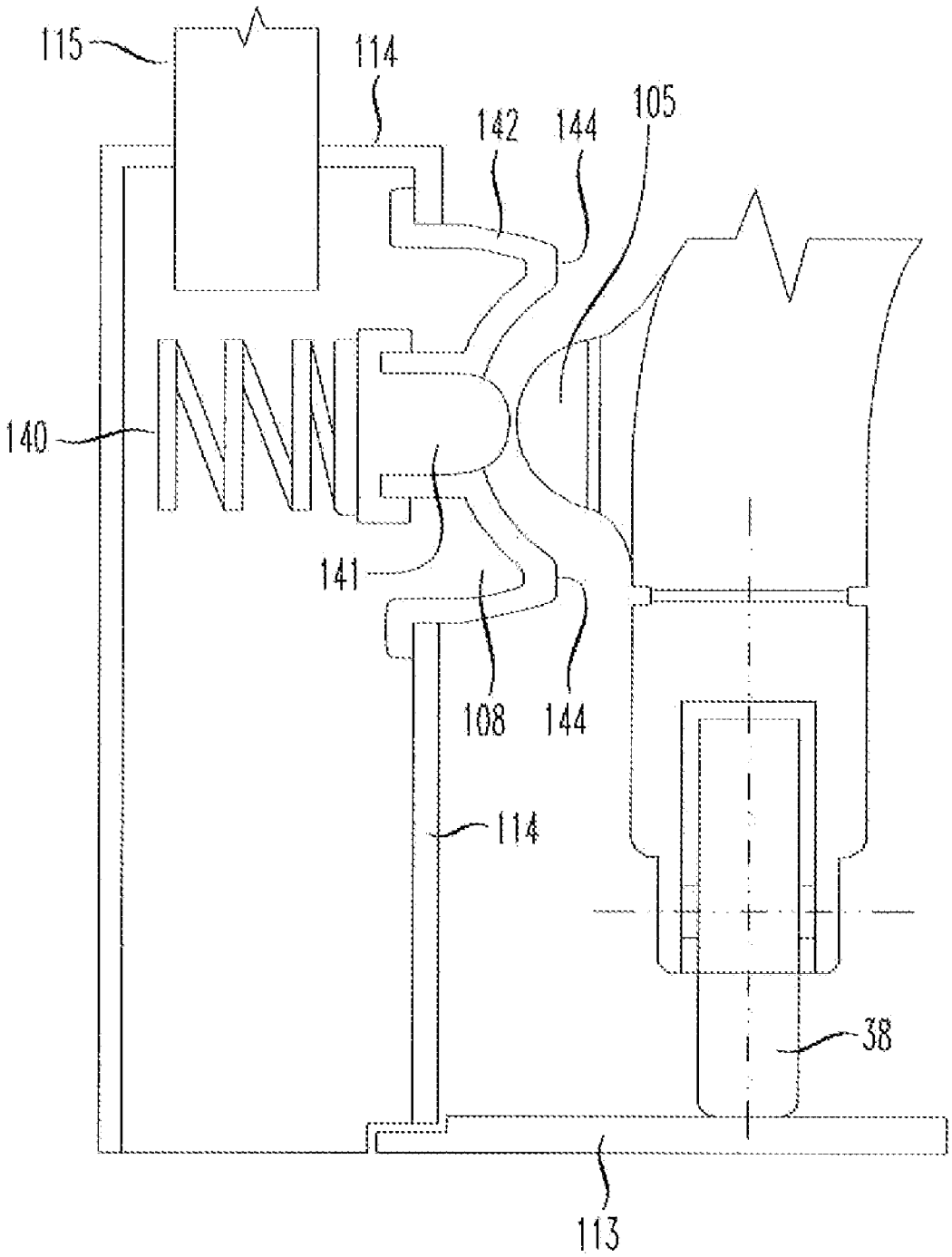

FIG. 7

FIG. 8A

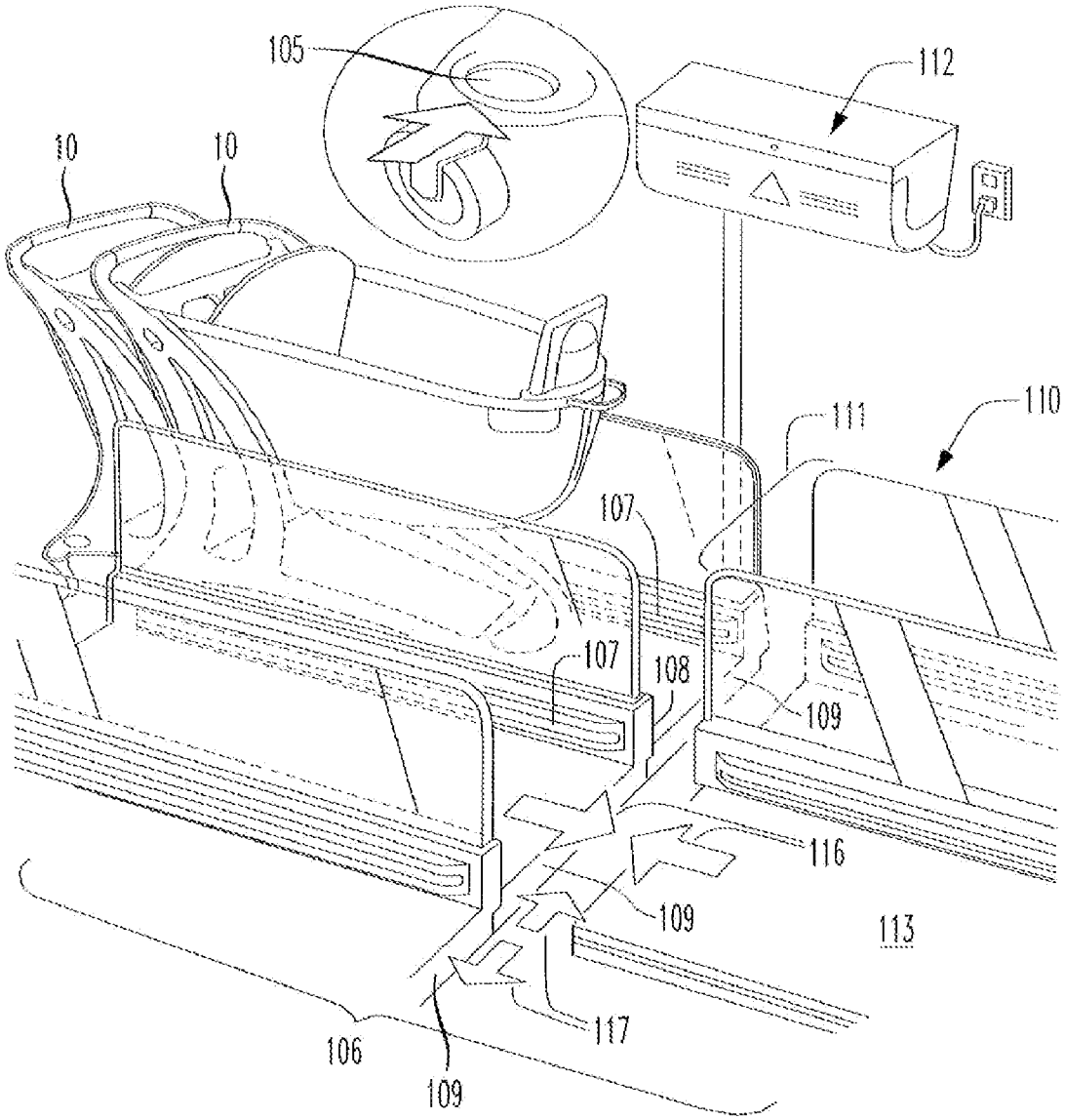

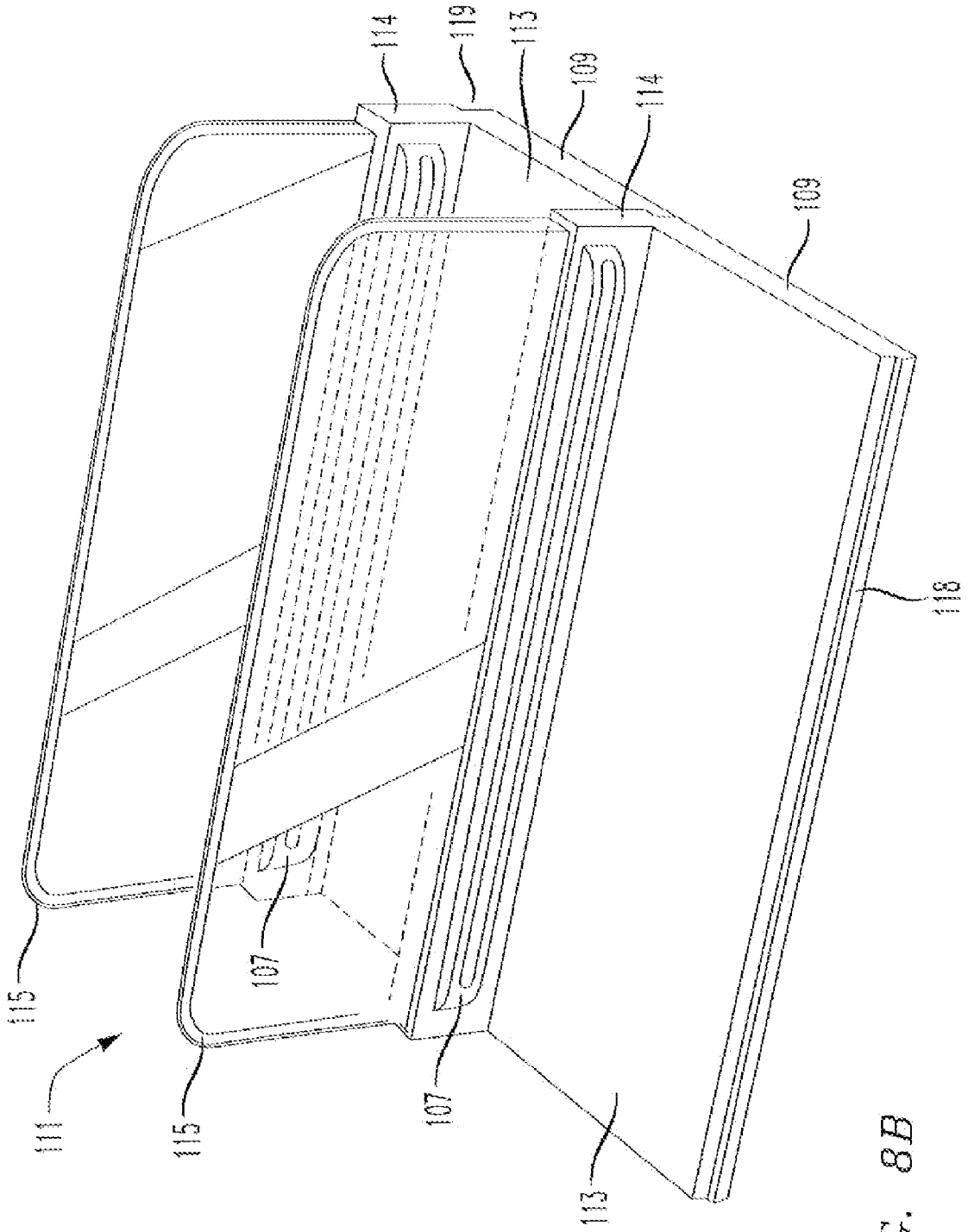

FIG. 8B

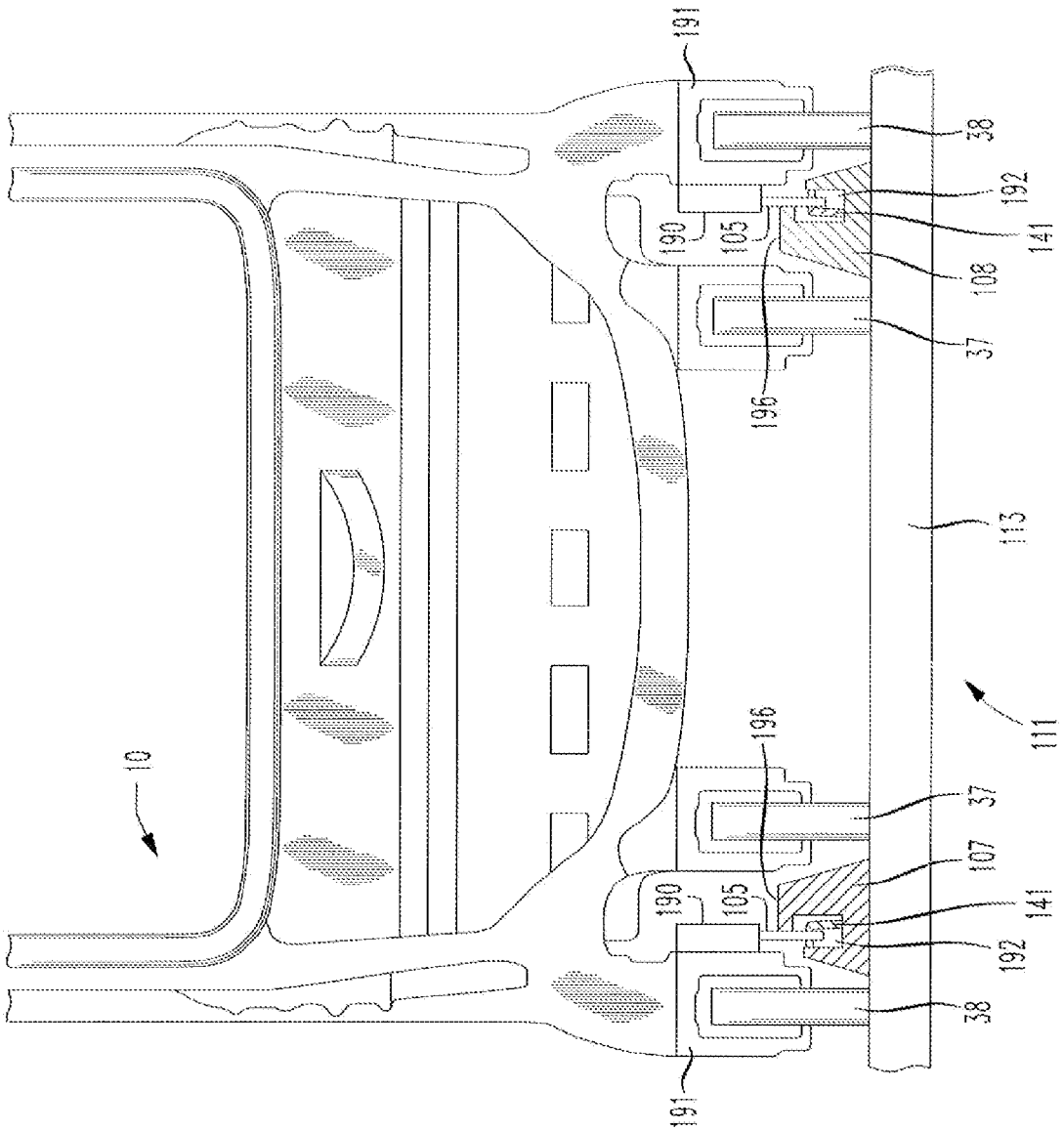

FIG. 8C

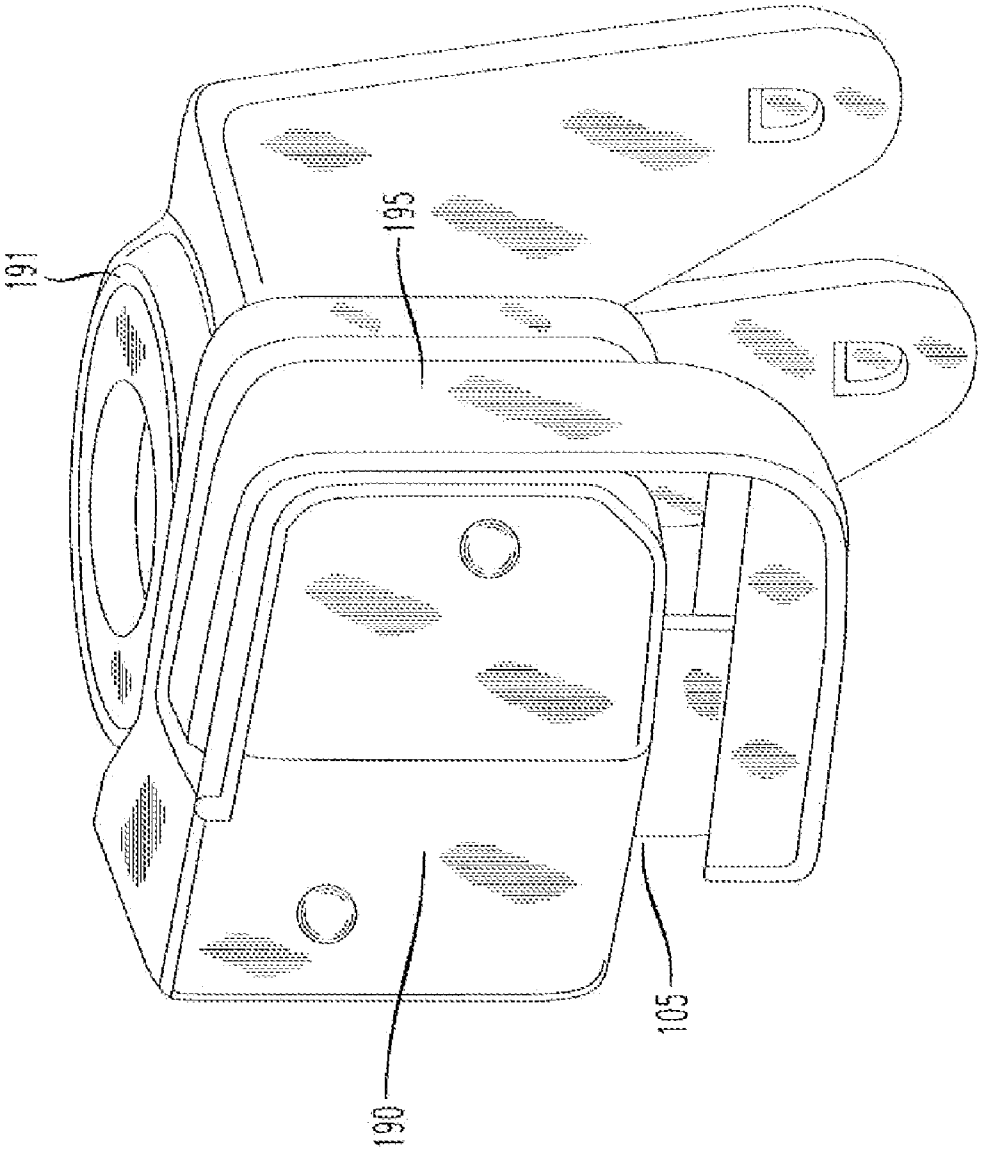

FIG. 8D

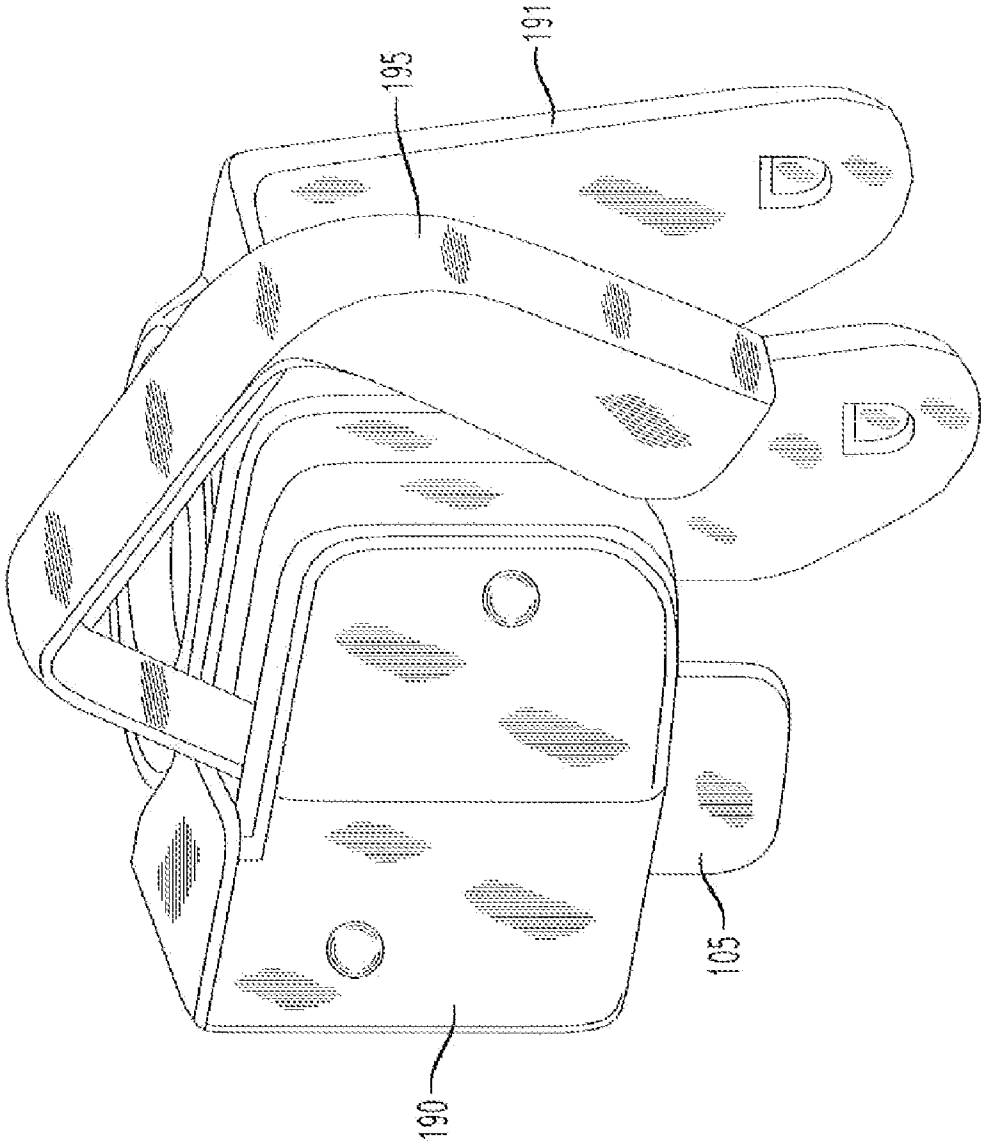

FIG. 8E

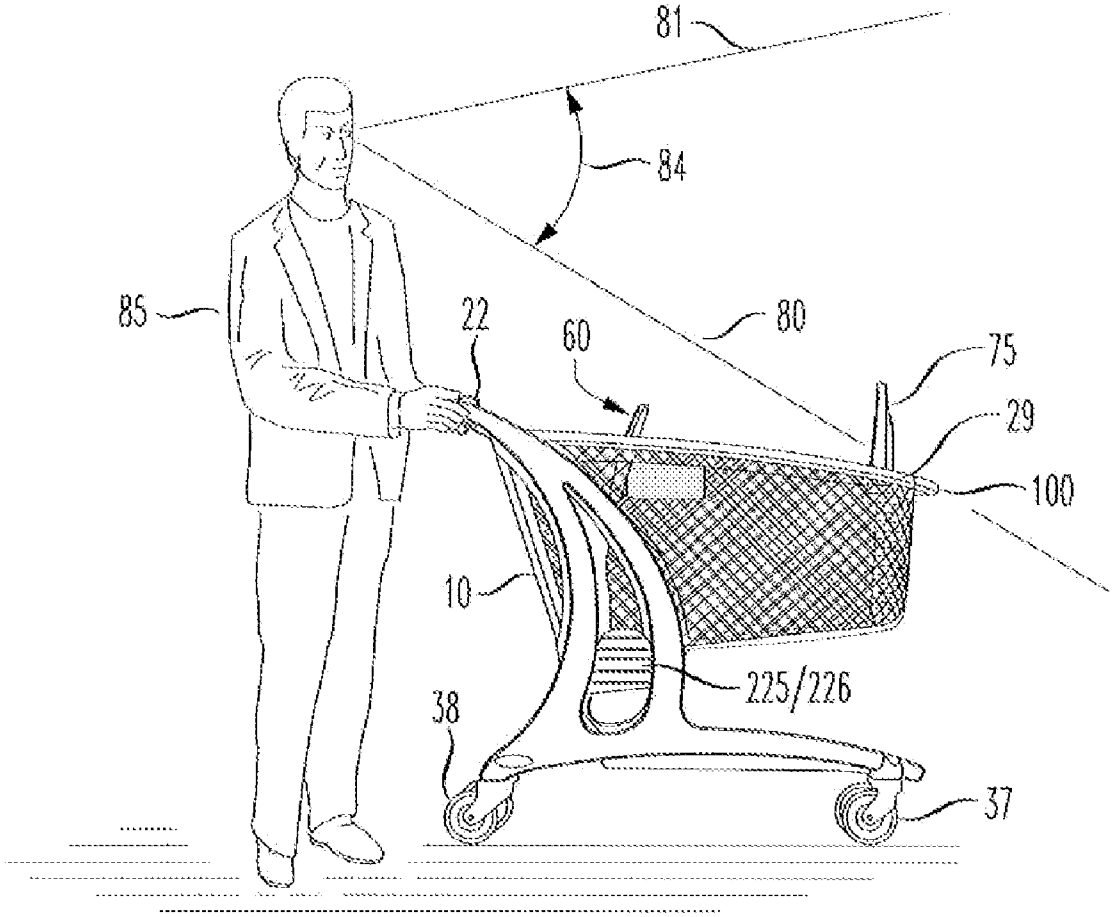

FIG. 9

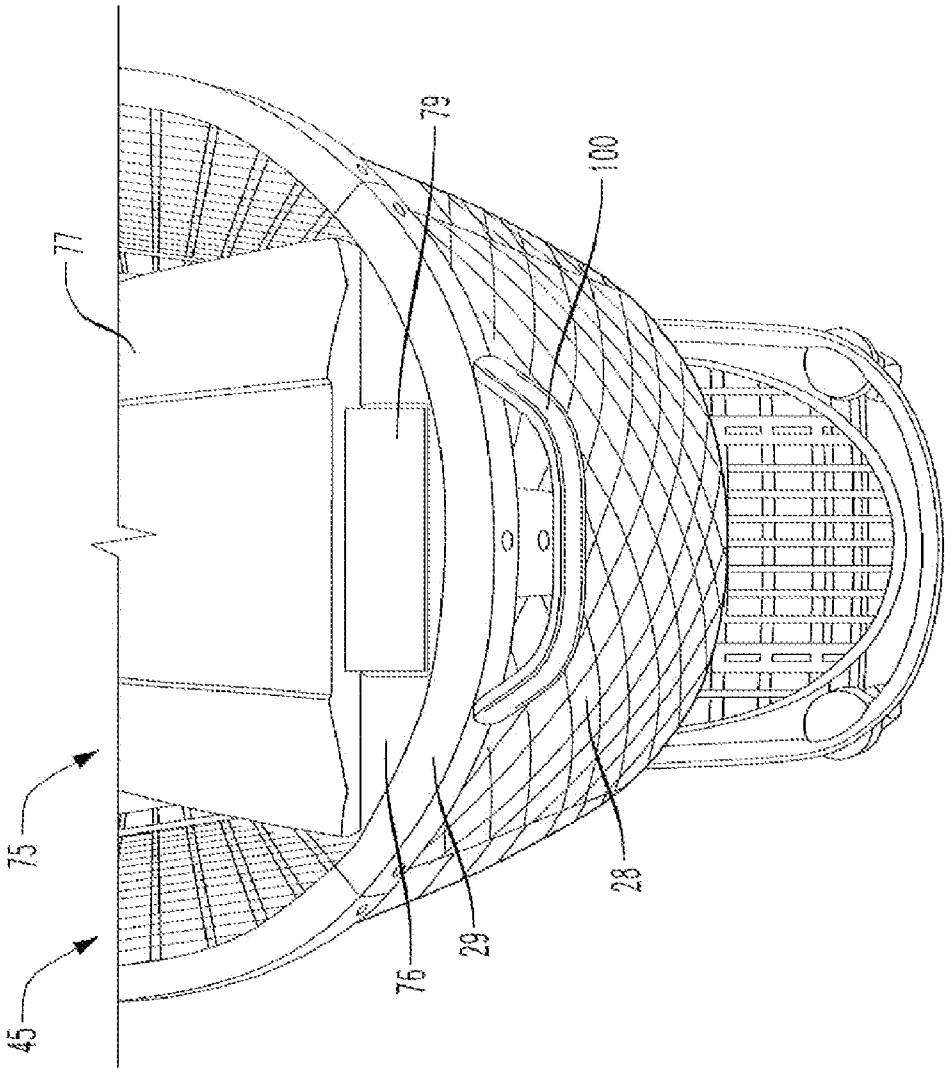

FIG. 10

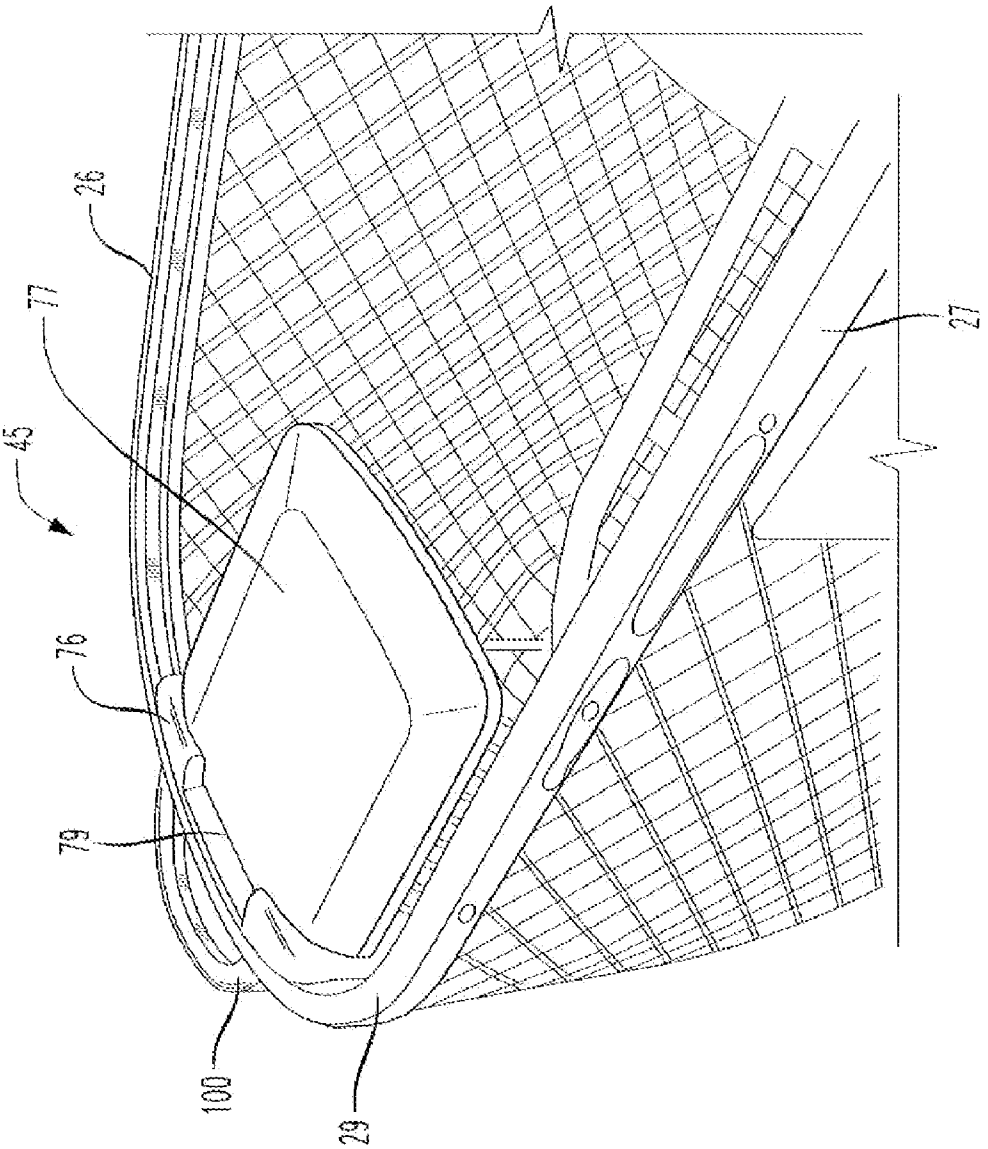

FIG. 11

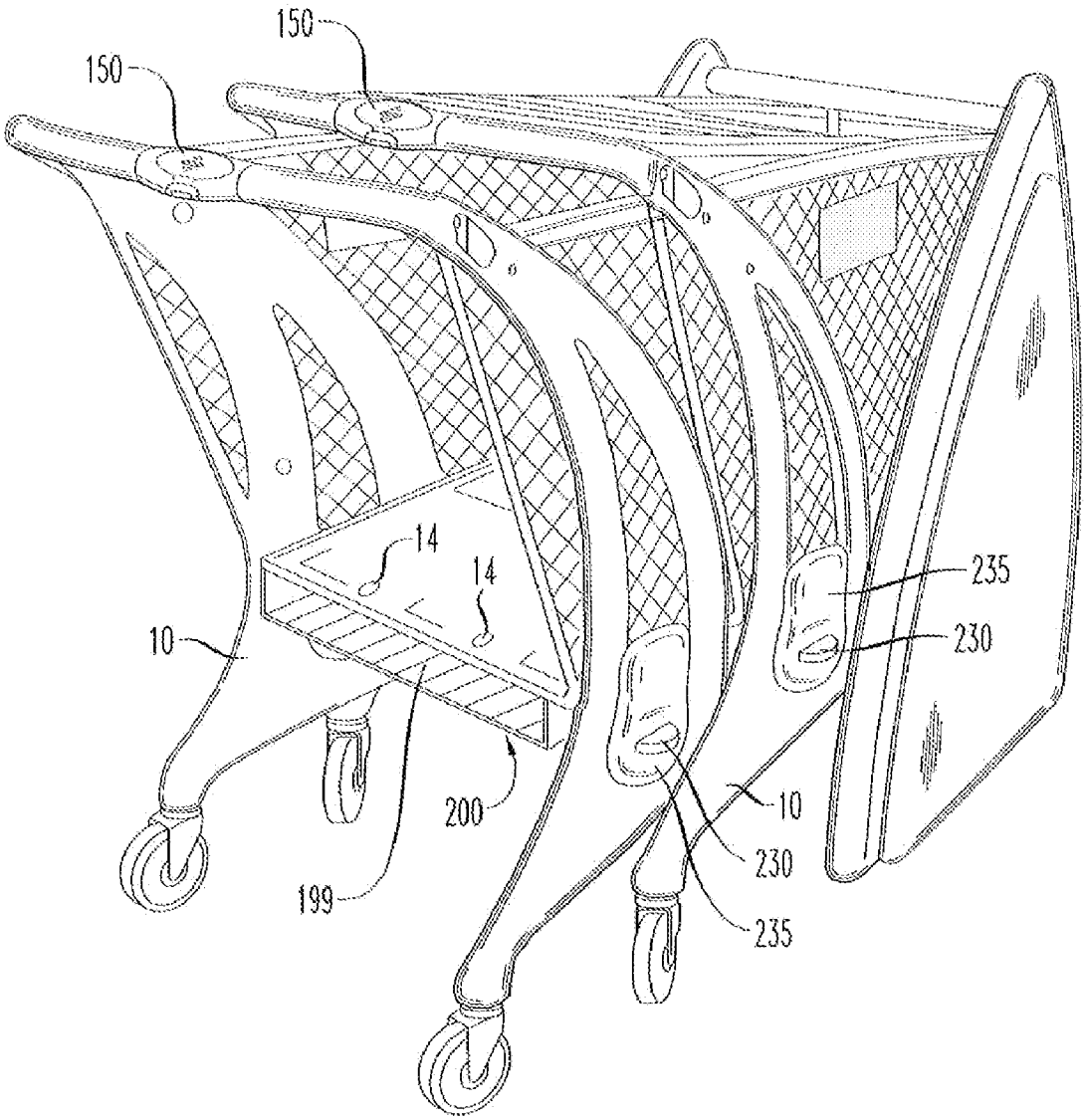

FIG. 12

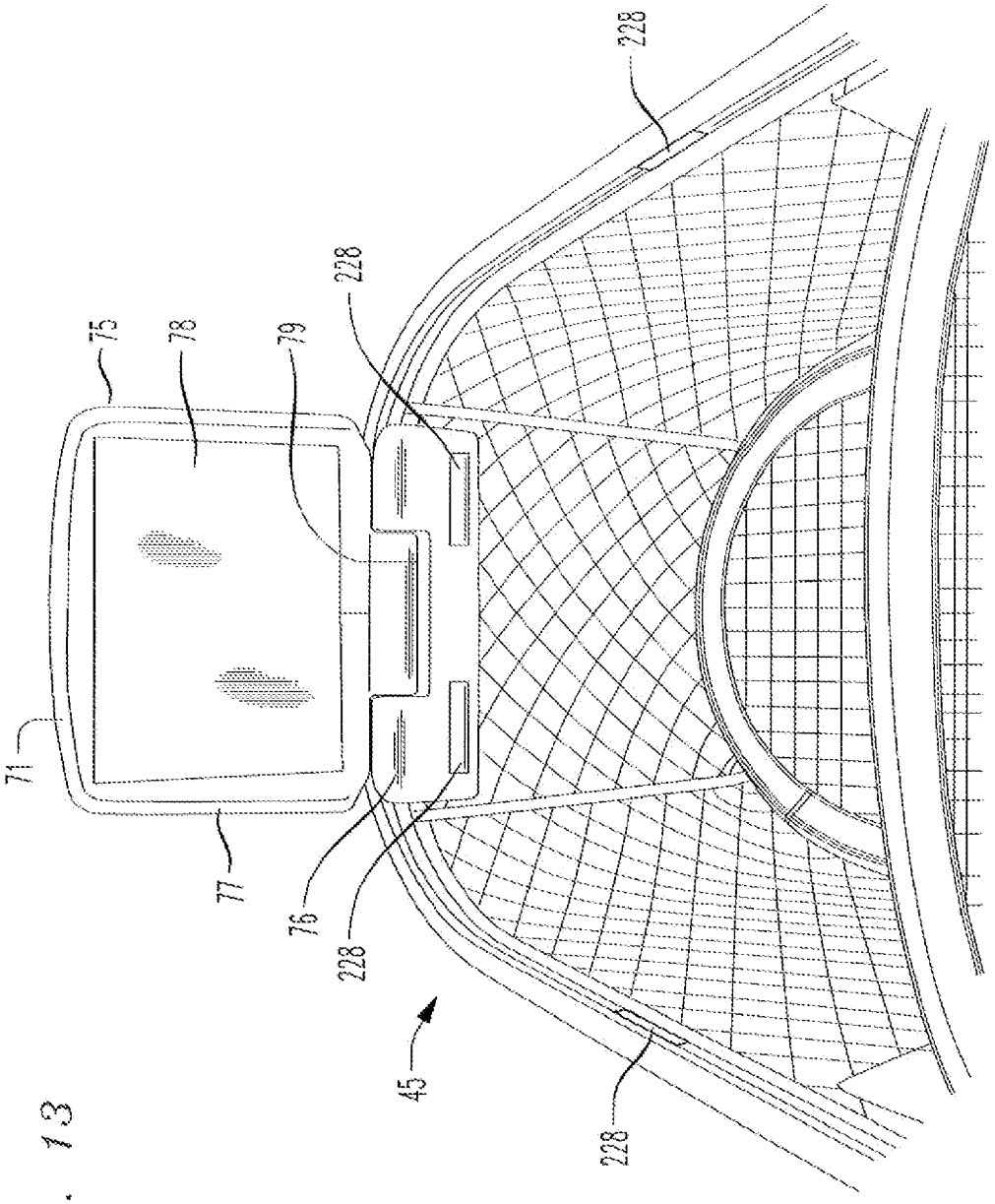

FIG. 13

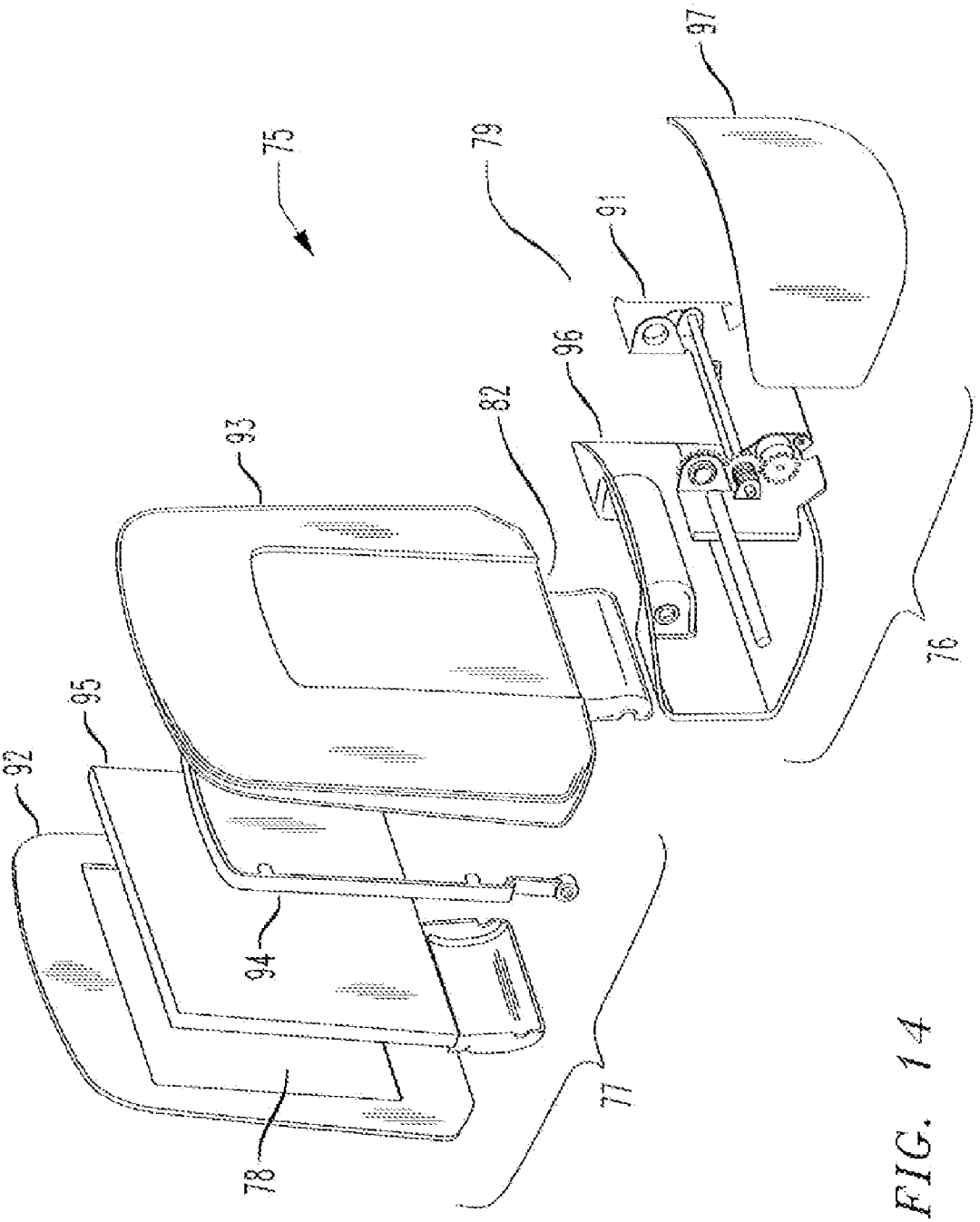

FIG. 14

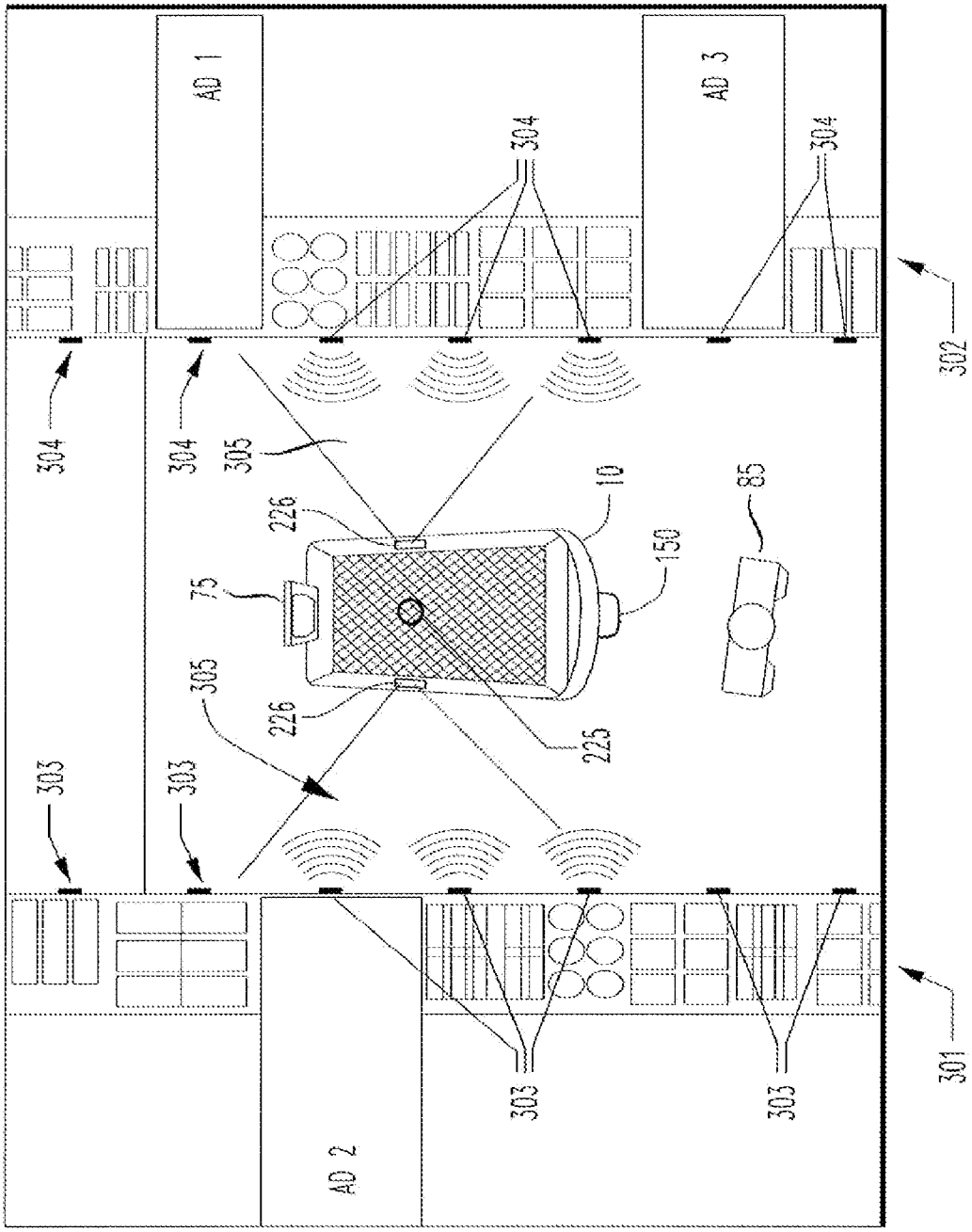
AD 1
AD 3
AD 2
304
304
304
304
305
305
303
303
303
303
302
301
10
150
85
75
226
226
225

FIG. 15

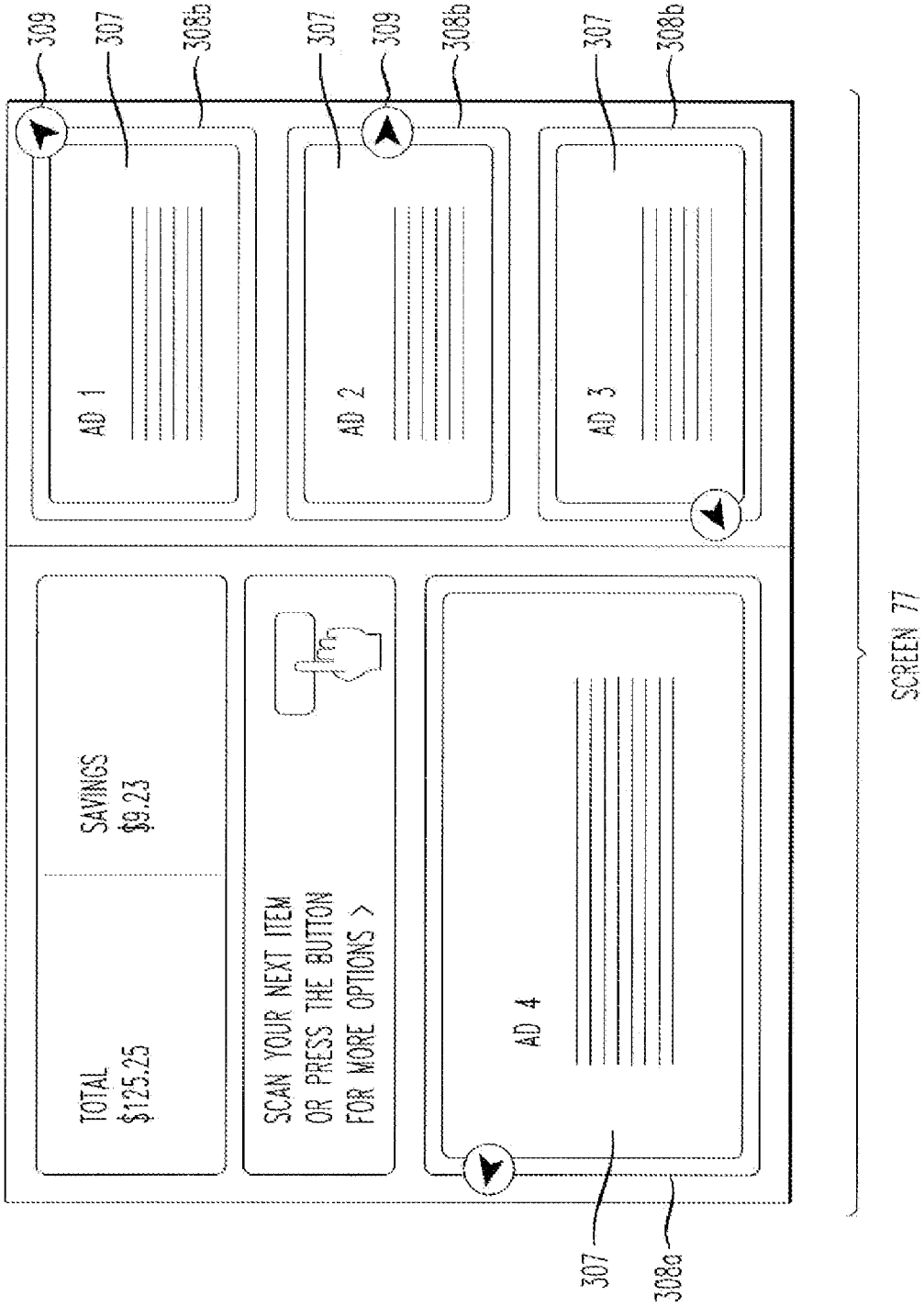
309
307
308b
307
309
308b
307
308b
AD 1
AD 2
AD 3
TOTAL
$125.25
SAVINGS
$9.23
SCAN YOUR NEXT ITEM
OR PRESS THE BUTTON
FOR MORE OPTIONS >
AD 4
307
308a
SCREEN 77

FIG. 16

FIG. 17

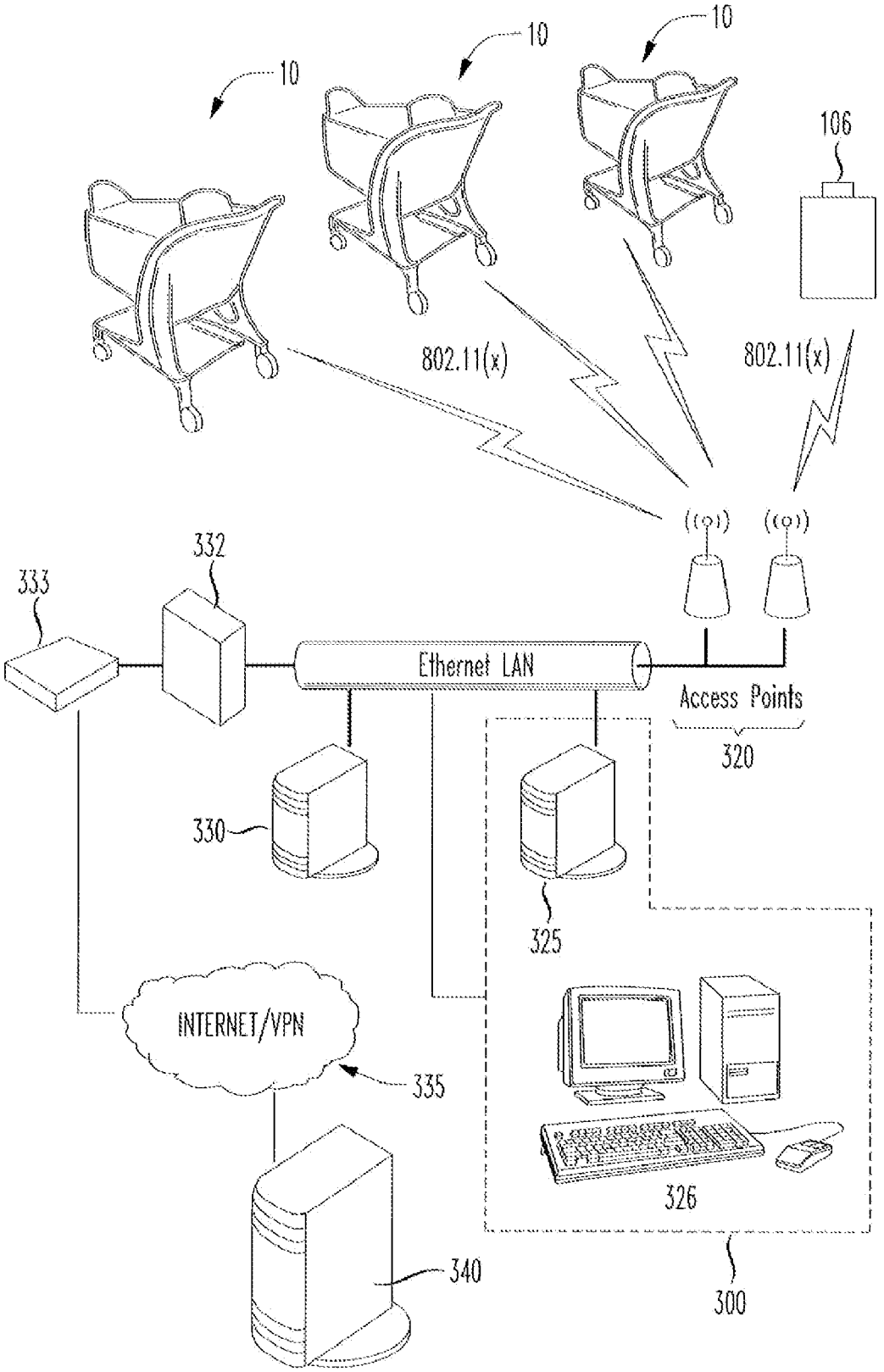
10
10
10
106
802.11(x)
802.11(x)
332
333
Ethernet LAN
Access Points
320
330
325
INTERNET/VPN
335
326
340
300

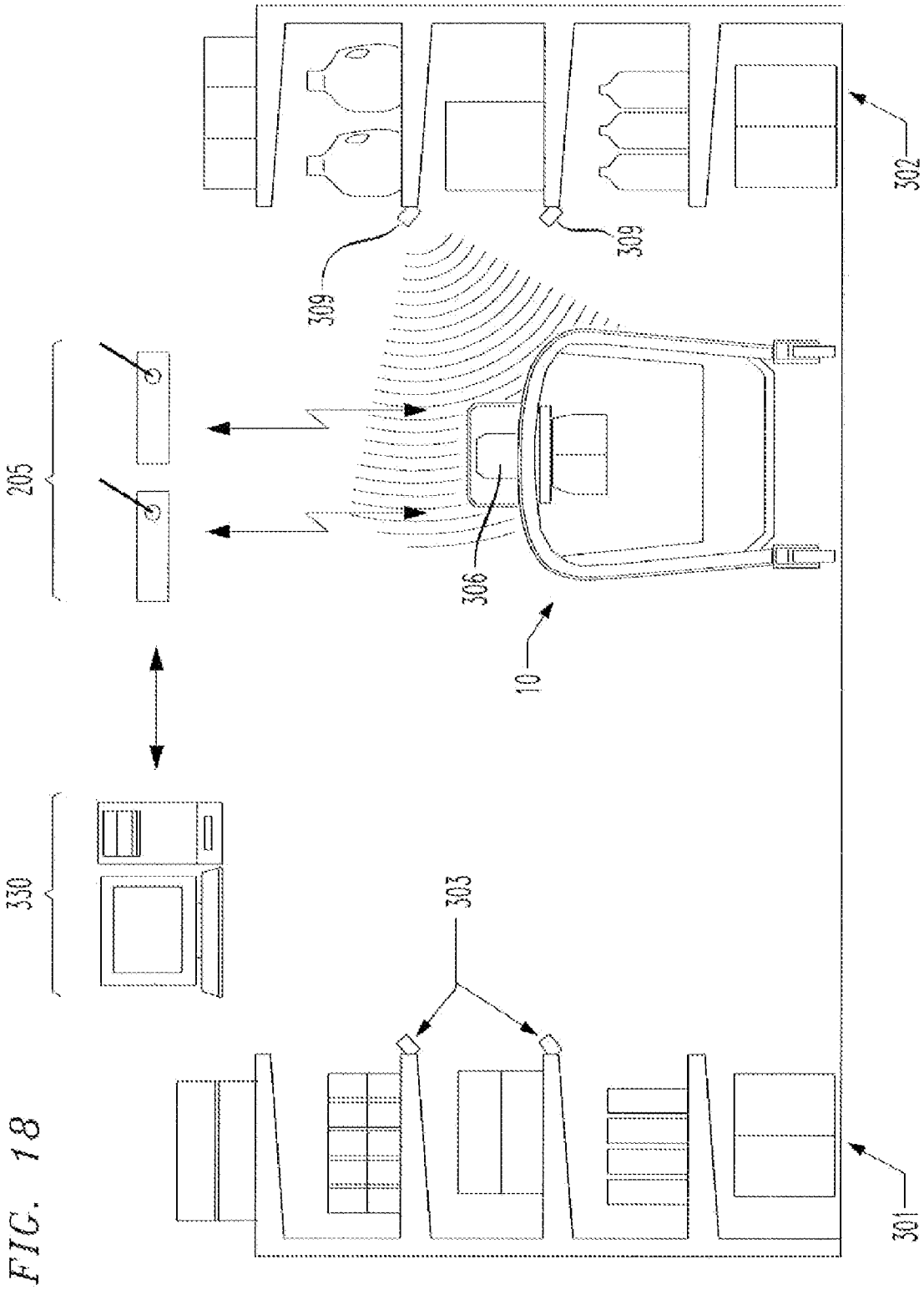

FIG. 18

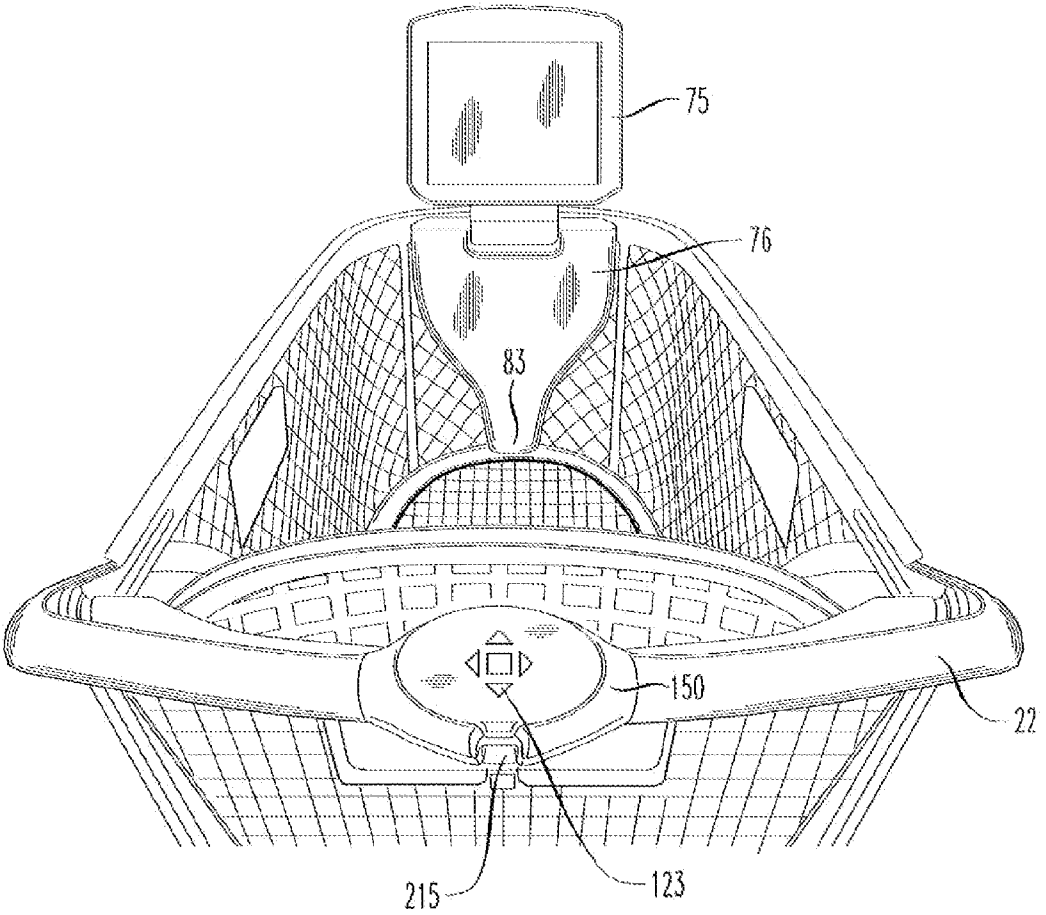

FIG. 19

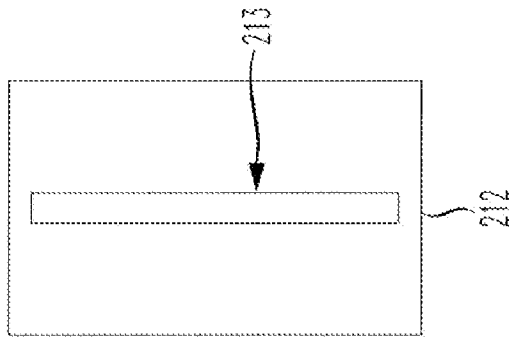

FIG. 20B

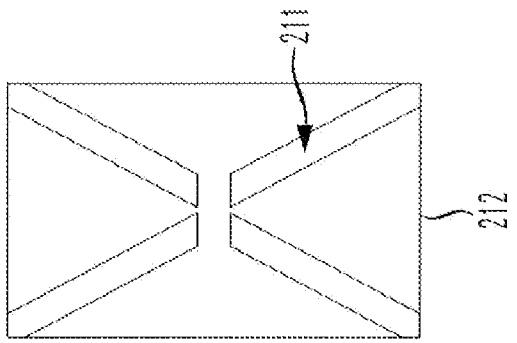

FIG. 20A

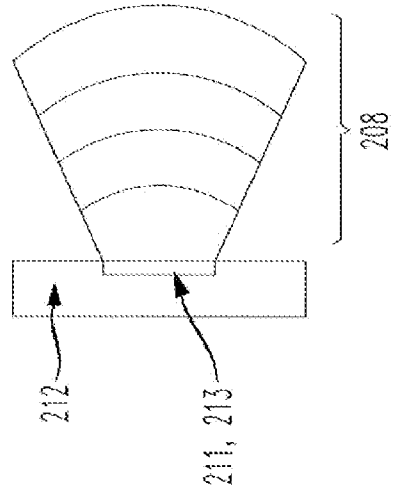

FIG. 20D

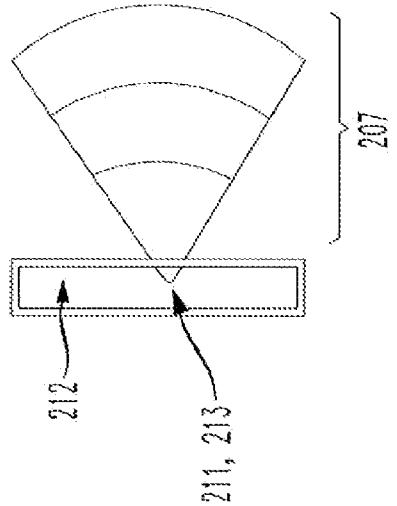

FIG. 20C

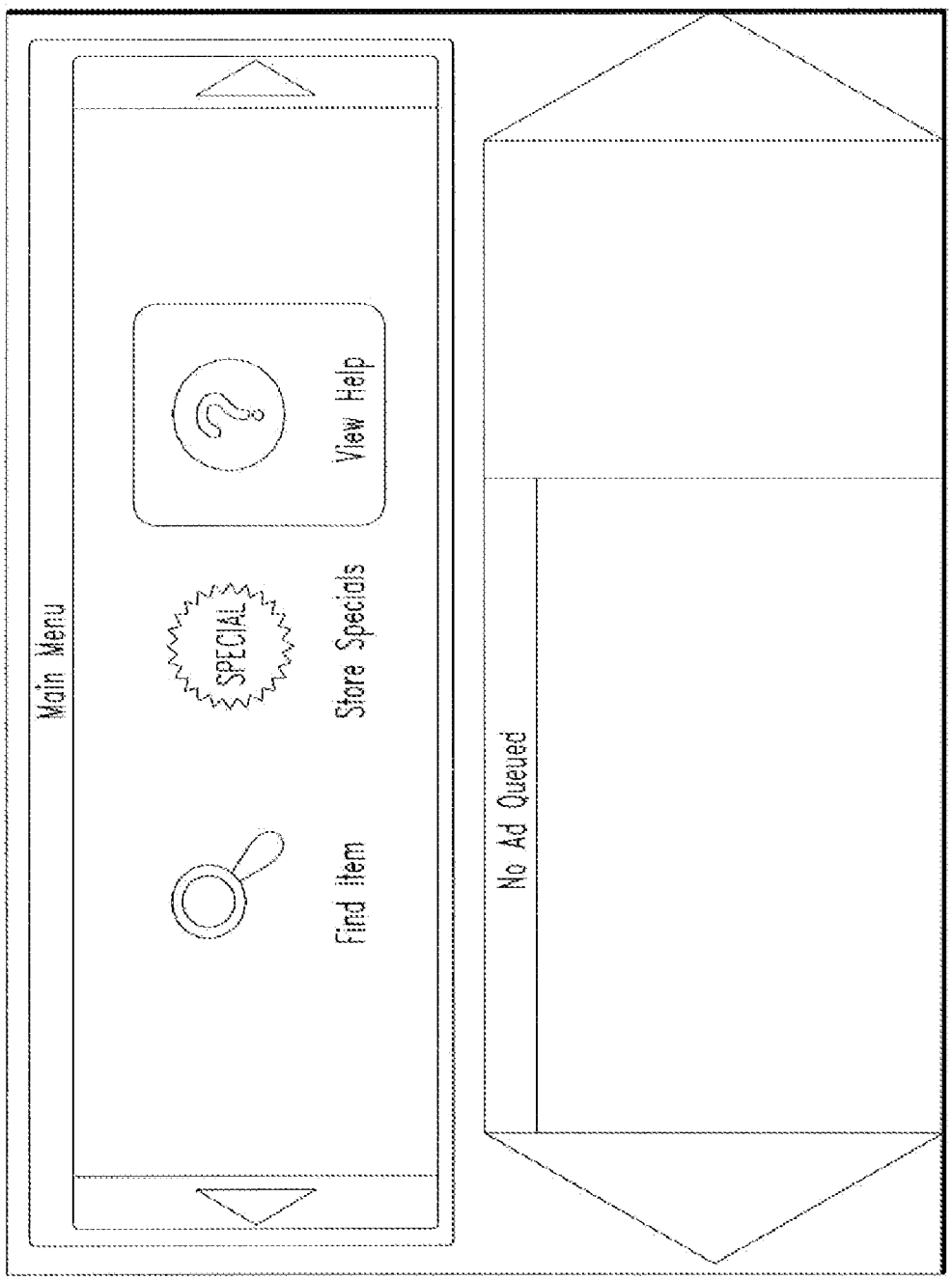
Main Menu
Find item
SPECIAL
Store Specials
View Help
No Ad Queued

FIG. 21A

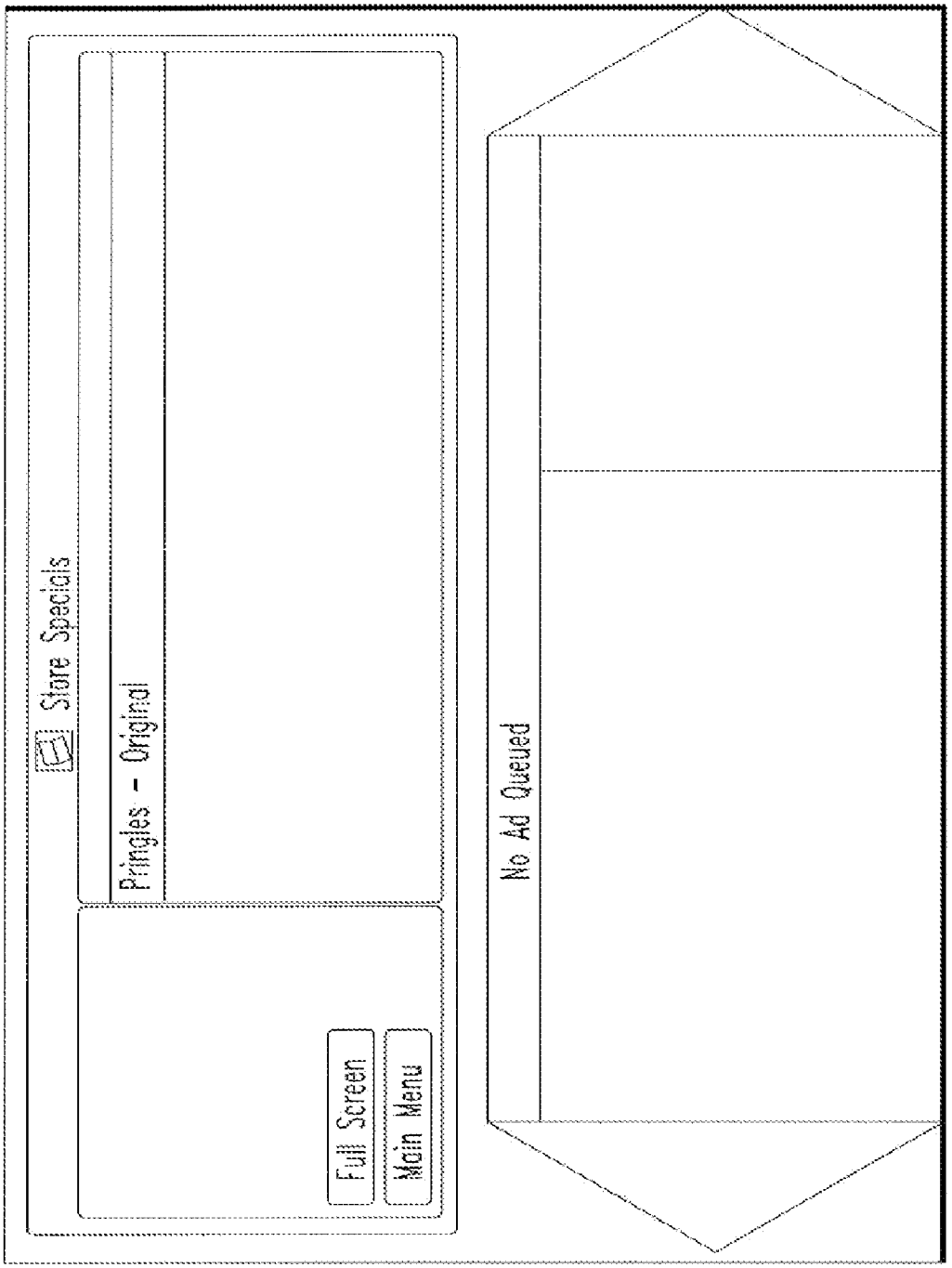
Store Specials
Pringles - Original
Full Screen
Main Menu
No Ad Queued

FIG. 21B

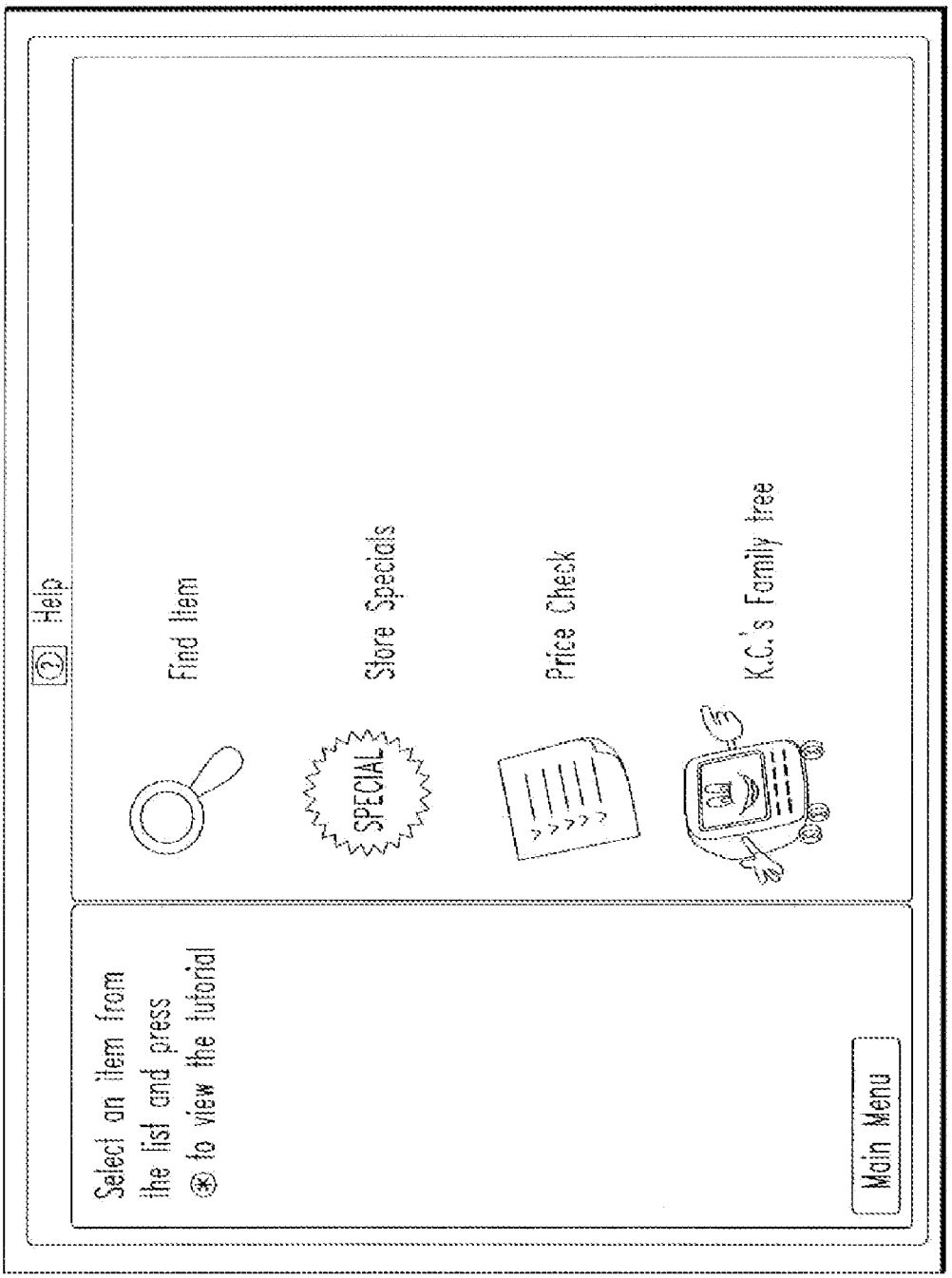
Help
Find Item
Store Specials
SPECIAL
Price Check
K.C.'s Family tree
Select an item from the list and press to view the tutorial
Main Menu

FIG. 21C

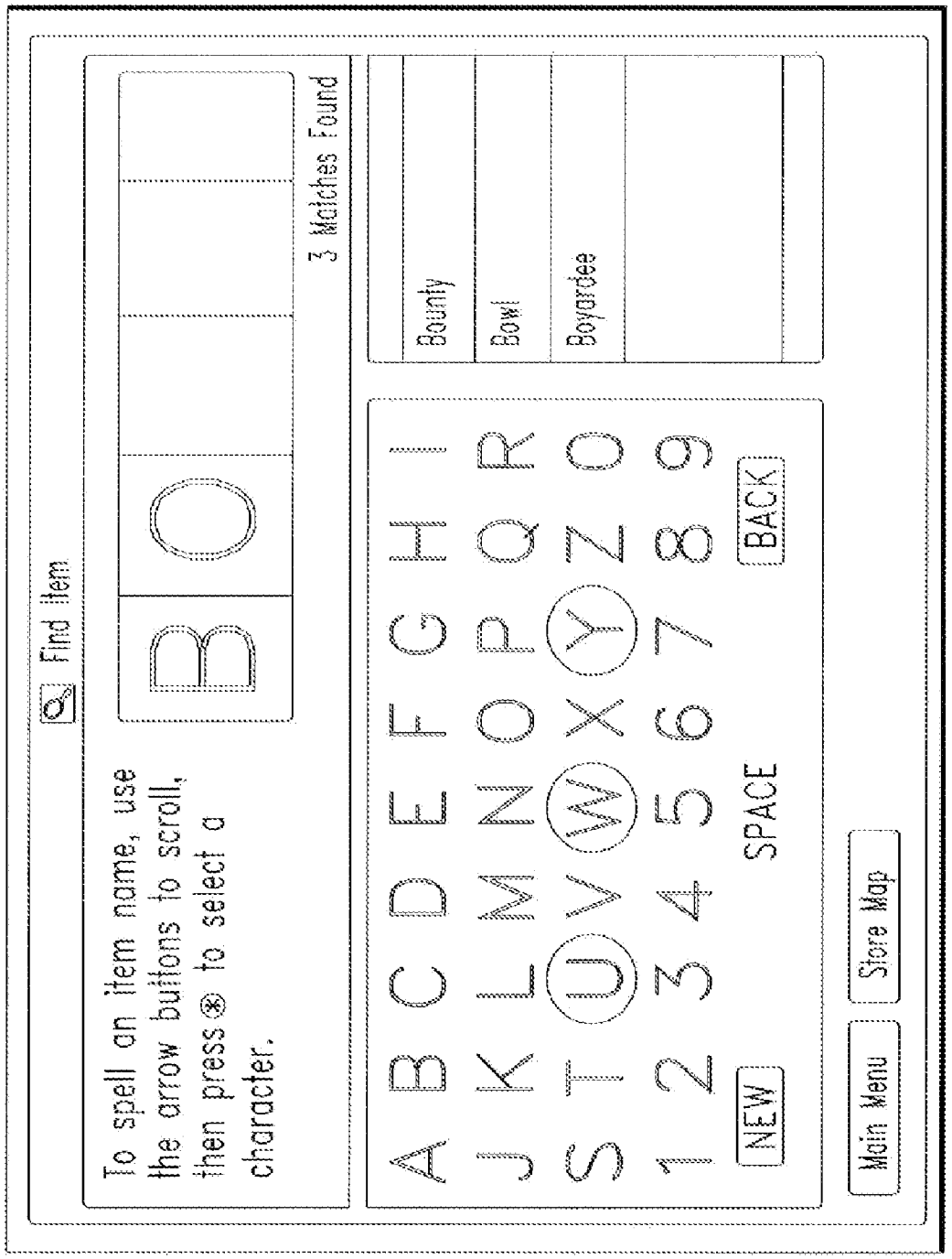
Find Item
To spell an item name, use the arrow buttons to scroll, then press ⊛ to select a character.
B O
3 Matches Found
Bounty
Bowl
Boyardee
A B C D E F G H I
J K L M N O P Q R
S T U V W X Y Z O
1 2 3 4 5 6 7 8 9
NEW
SPACE
BACK
Main Menu
Store Map

FIG. 21D

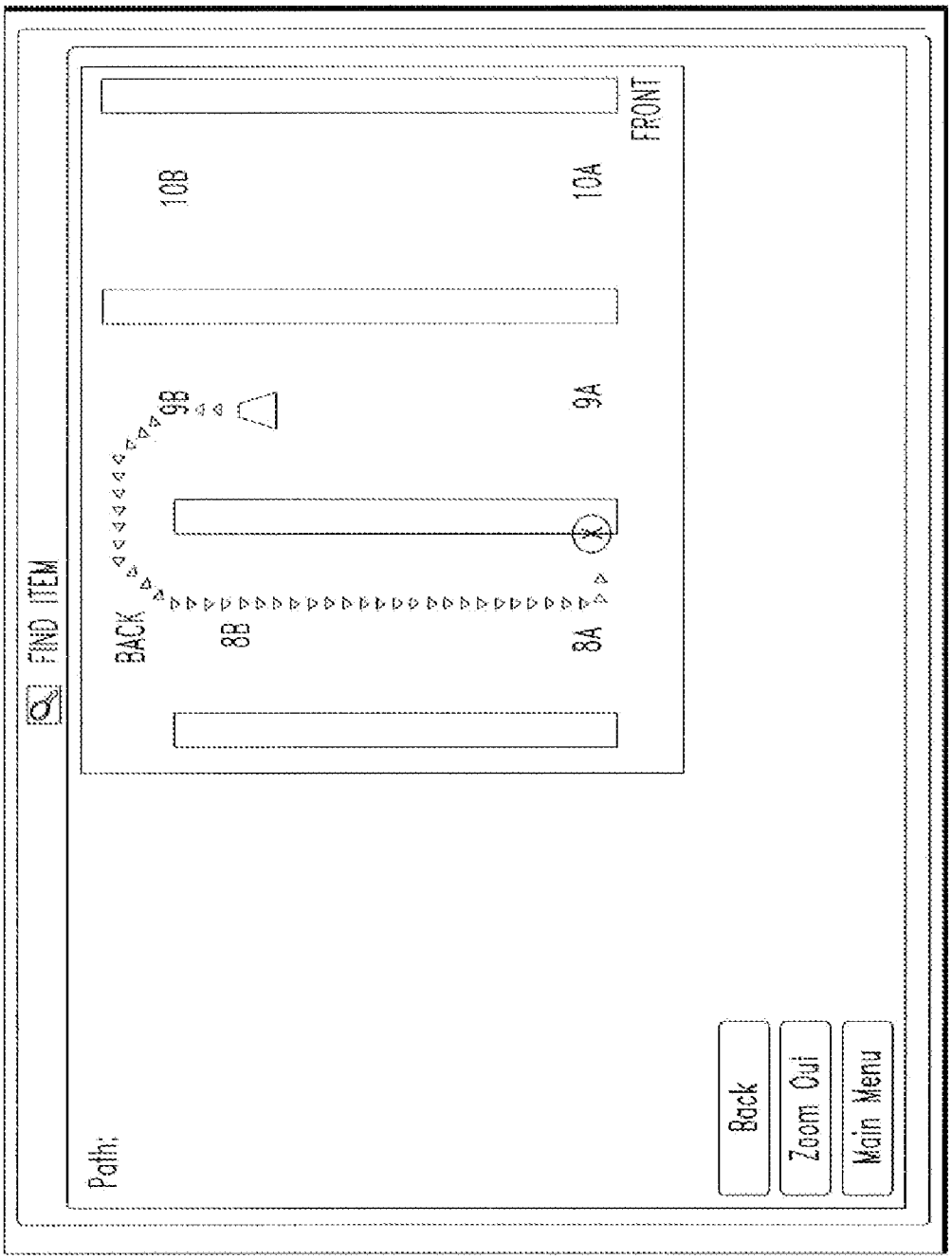
FIND ITEM
Path:
BACK
FRONT
8B
8A
9B
9A
10B
10A
Back
Zoom Out
Main Menu

FIG. 21E

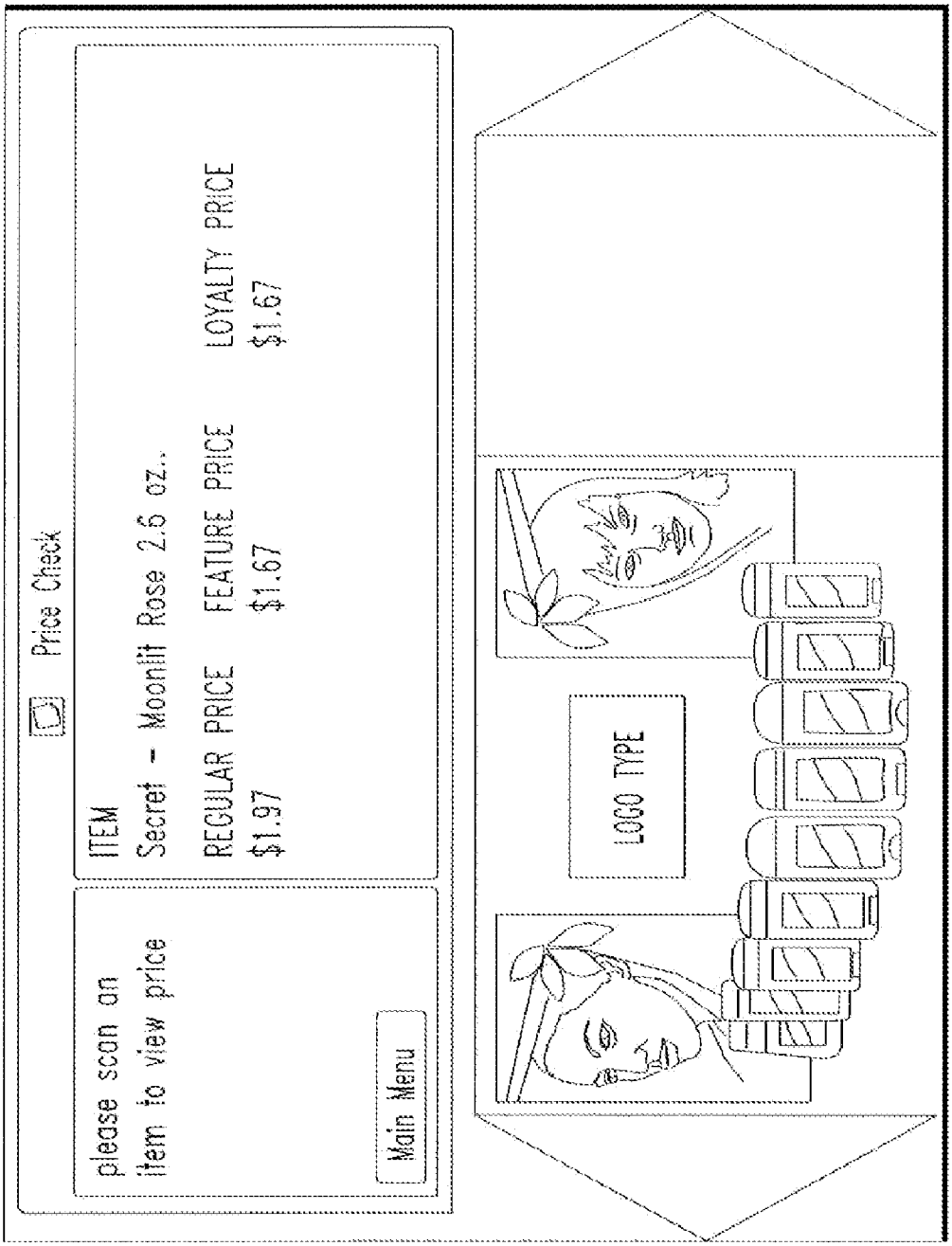
Price Check
please scan an
item to view price
ITEM
Secret - Moonlit Rose 2.6 oz..
REGULAR PRICE
$1.97
FEATURE PRICE
$1.67
LOYALTY PRICE
$1.67
Main Menu
LOGO TYPE

FIG. 21F

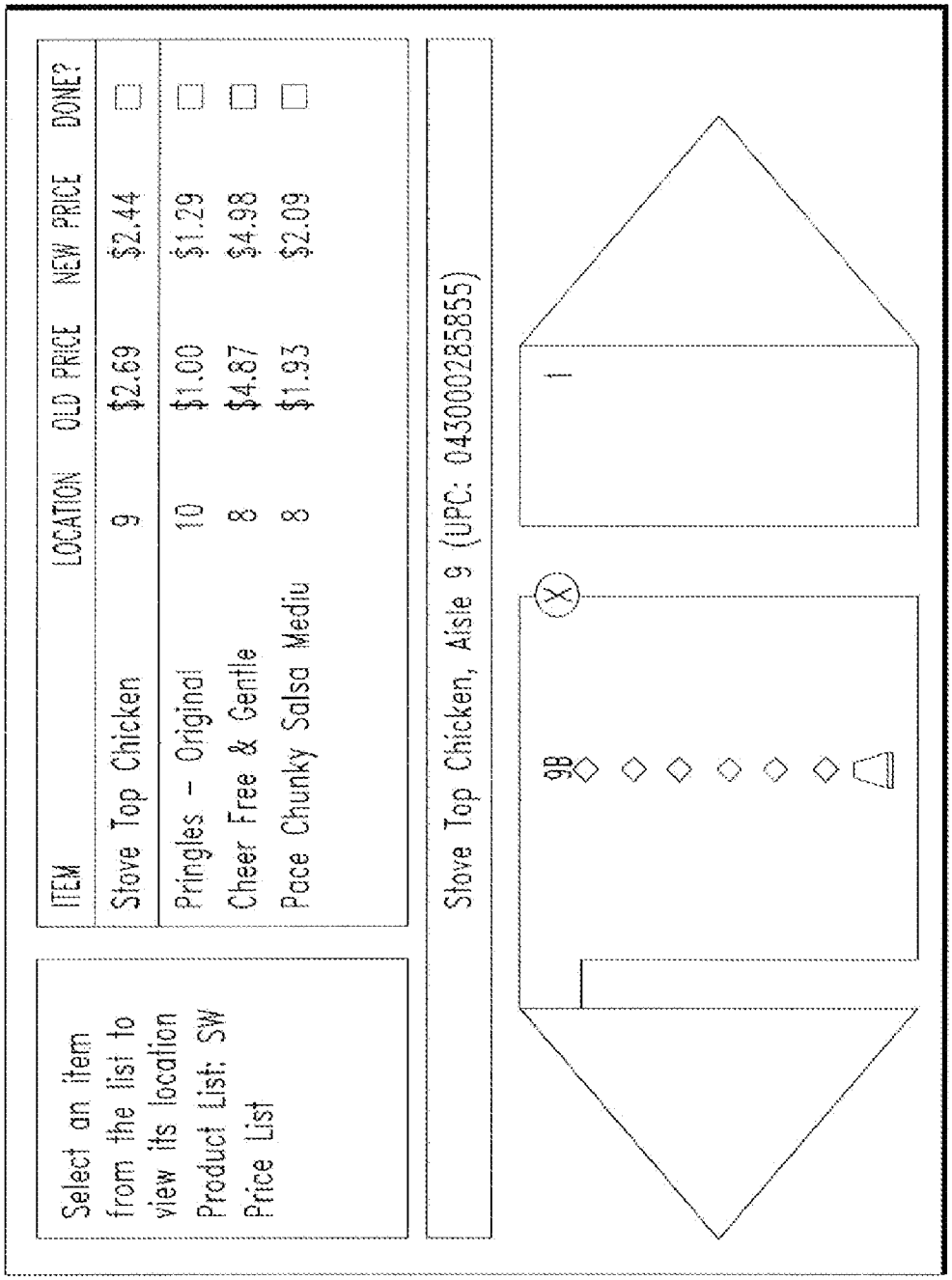
Select an item from the list to view its location
Product List: SW
Price List
ITEM
LOCATION
OLD PRICE
NEW PRICE
DONE?
Stove Top Chicken
9
$2.69
$2.44
Pringles - Original
10
$1.00
$1.29
Cheer Free & Gentle
8
$4.87
$4.98
Pace Chunky Salsa Mediu
8
$1.93
$2.09
Stove Top Chicken, Aisle 9 (UPC: 043000285855)
9B
X
1

FIG. 22

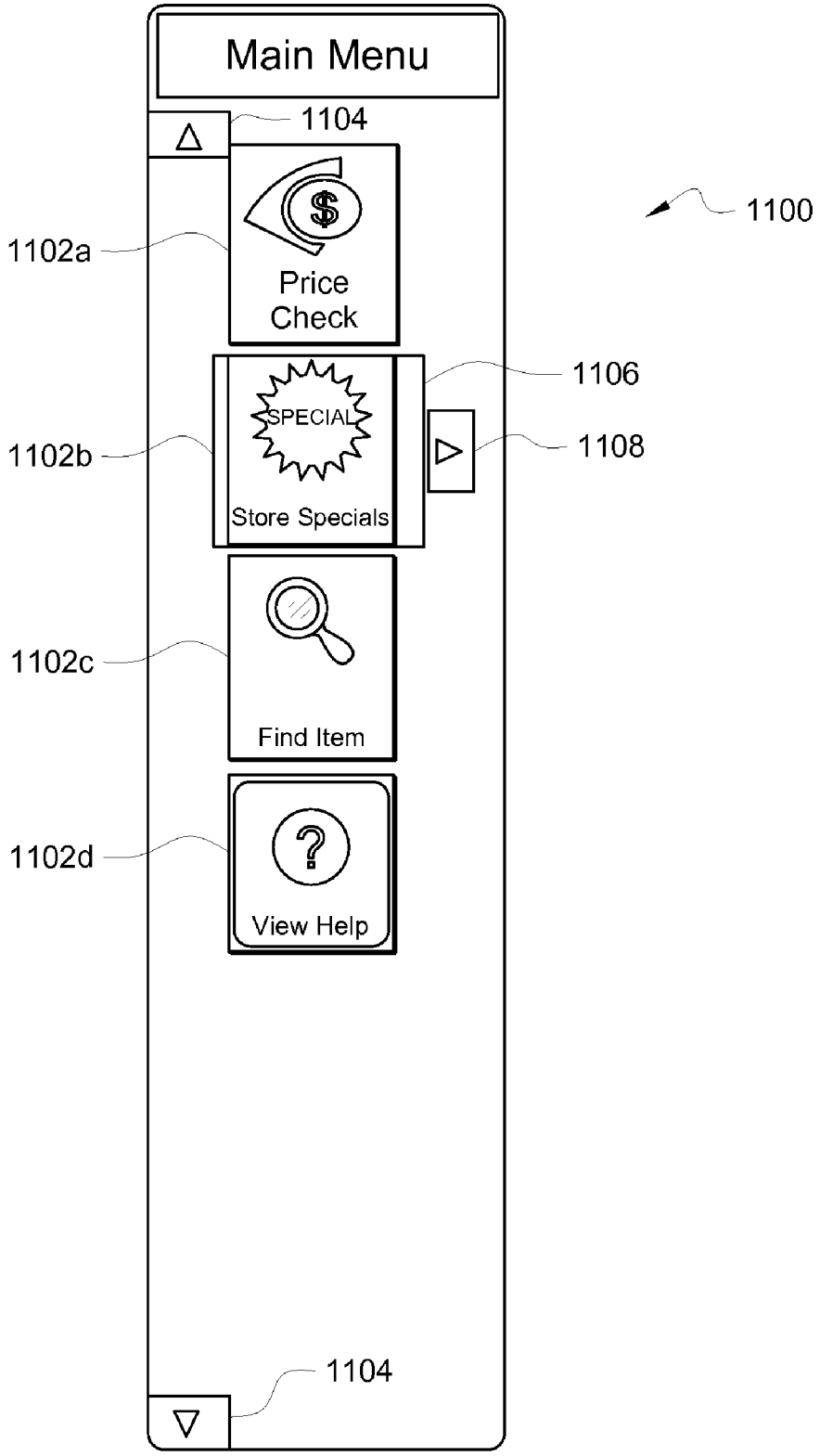
Main Menu
1104
1100
1102a
Price Check
1106
SPECIAL
1102b
1108
Store Specials
1102c
Find Item
1102d
View Help
1104

FIG. 23

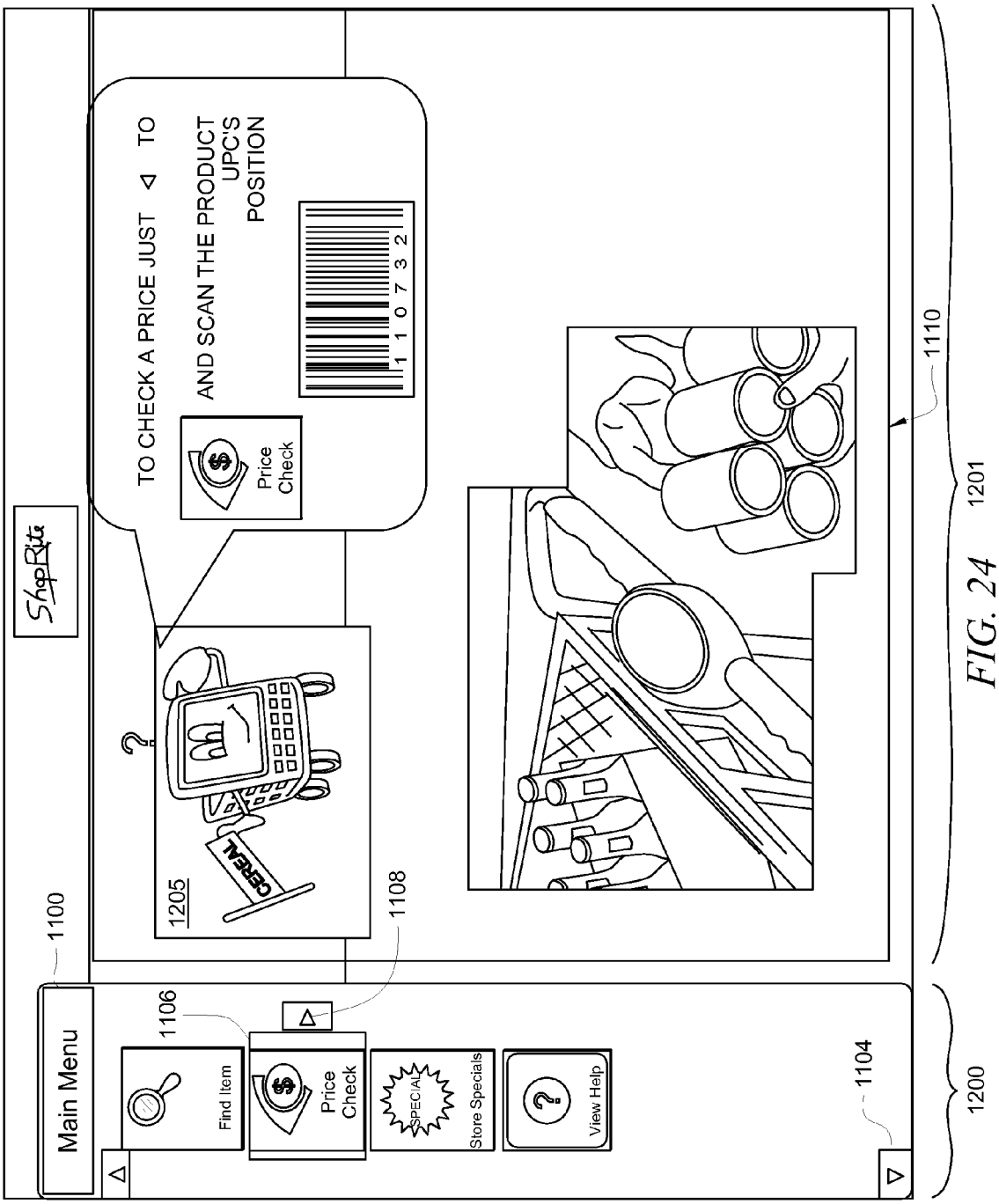
ShopRite
TO CHECK A PRICE JUST TO
AND SCAN THE PRODUCT
UPC'S
POSITION
Price
Check
1 1 0 7 3 2
CEREAL
1205
1110
1201
1100
1108
1106
Main Menu
Find Item
Price
Check
SPECIAL
Store Specials
View Help
1104
1200

FIG. 24

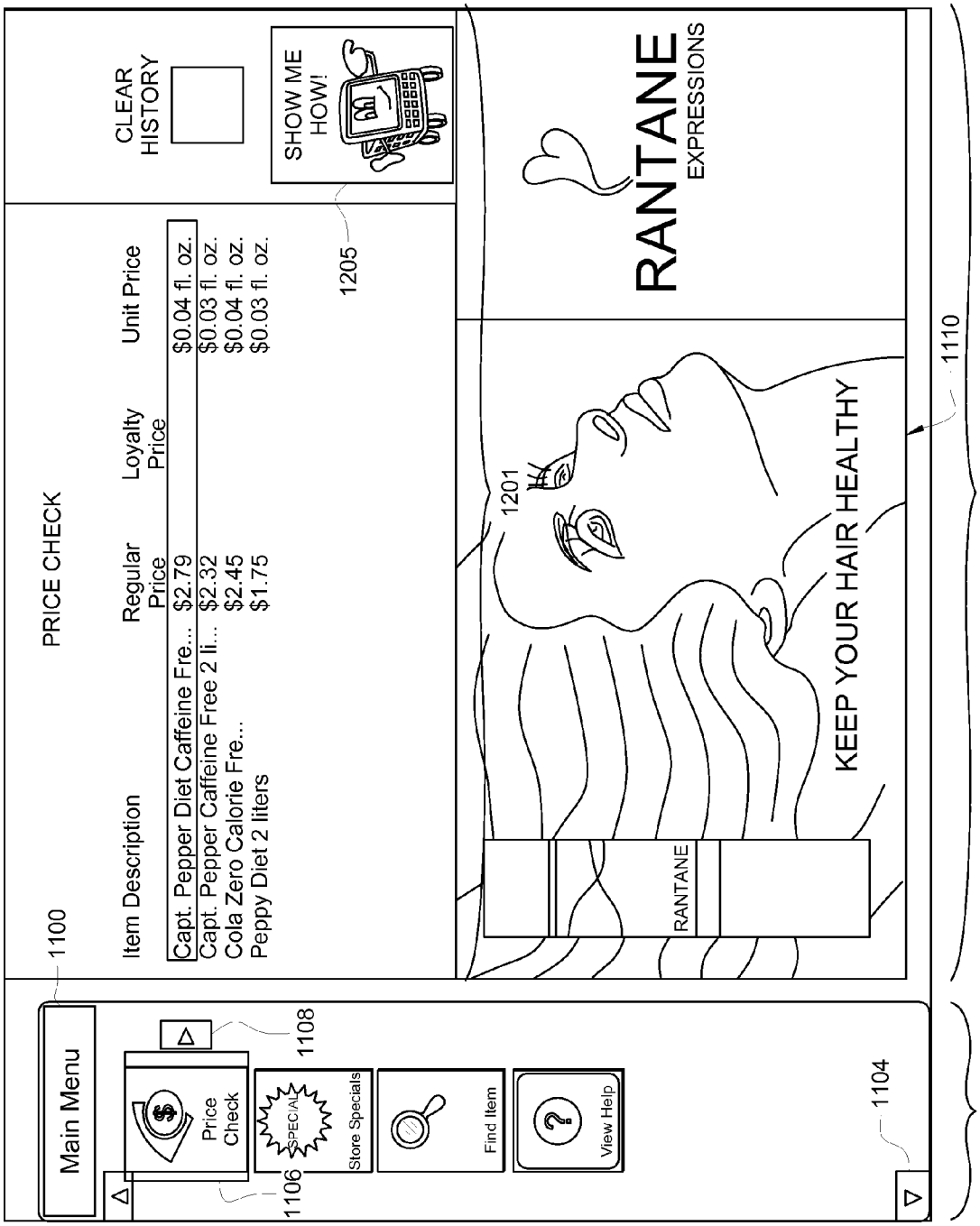
1100
Main Menu
Price Check
1106
1108
SPECIAL
Store Specials
Find Item
View Help
1104
1200
PRICE CHECK
Item Description
Regular Price
Loyalty Price
Unit Price
Capt. Pepper Diet Caffeine Fre... $2.79 $0.04 fl. oz.
Capt. Pepper Caffeine Free 2 li... $2.32 $0.03 fl. oz.
Cola Zero Calorie Fre... $2.45 $0.04 fl. oz.
Peppy Diet 2 liters $1.75 $0.03 fl. oz.
CLEAR HISTORY
SHOW ME HOW!
1205
1201
RANTANE
EXPRESSIONS
KEEP YOUR HAIR HEALTHY
RANTANE
1110
1202

FIG. 25

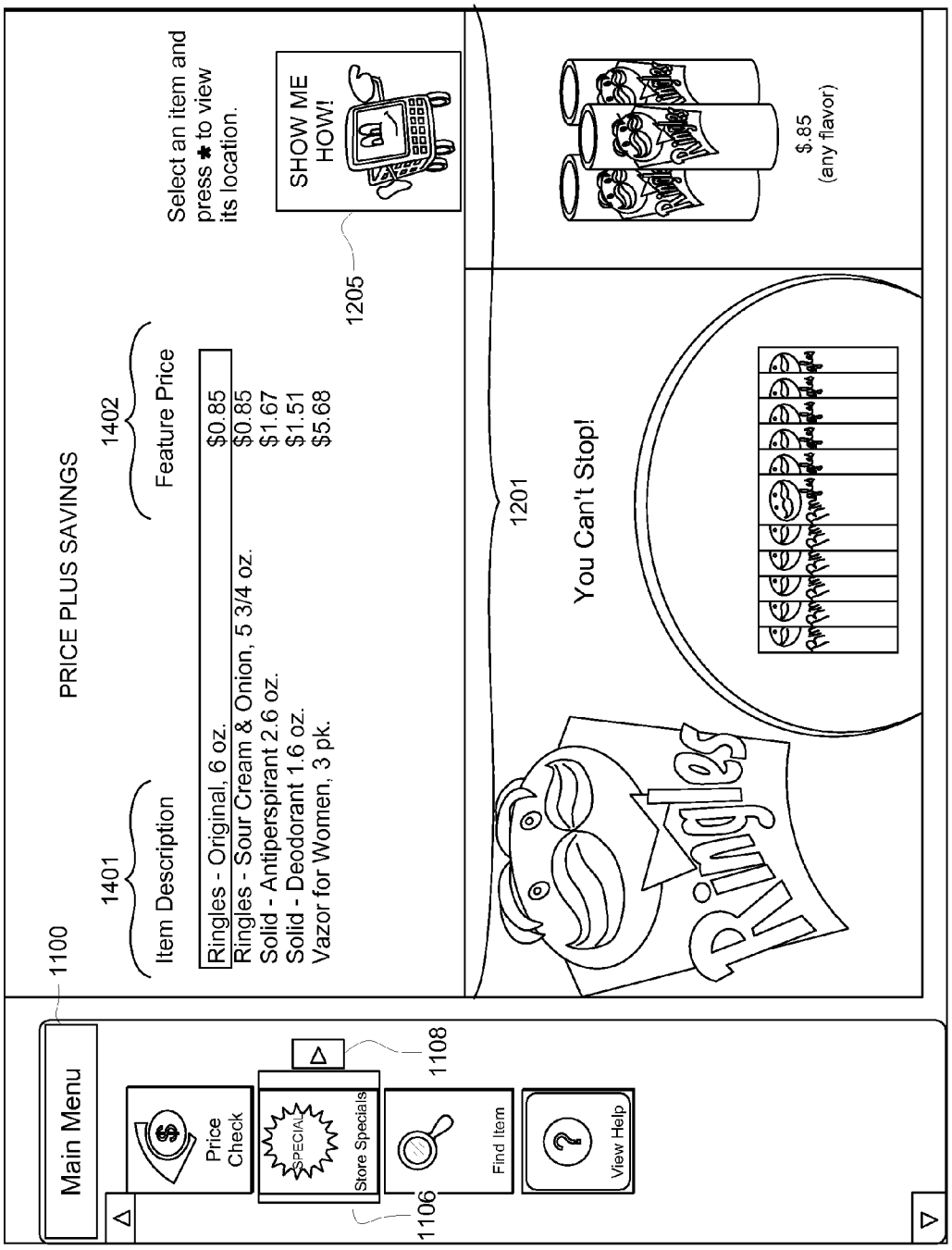
1100
Main Menu
Price Check
SPECIAL
Store Specials
1108
1106
Find Item
View Help
1200
PRICE PLUS SAVINGS
1401
Item Description
1402
Feature Price
Ringles - Original, 6 oz. $0.85
Ringles - Sour Cream & Onion, 5 3/4 oz. $0.85
Solid - Antiperspirant 2.6 oz. $1.67
Solid - Deodorant 1.6 oz. $1.51
Vazor for Women, 3 pk. $5.68
Select an item and press * to view its location.
SHOW ME HOW!
1205
1201
You Can't Stop!
Ringles
$.85
(any flavor)
1202

FIG. 26

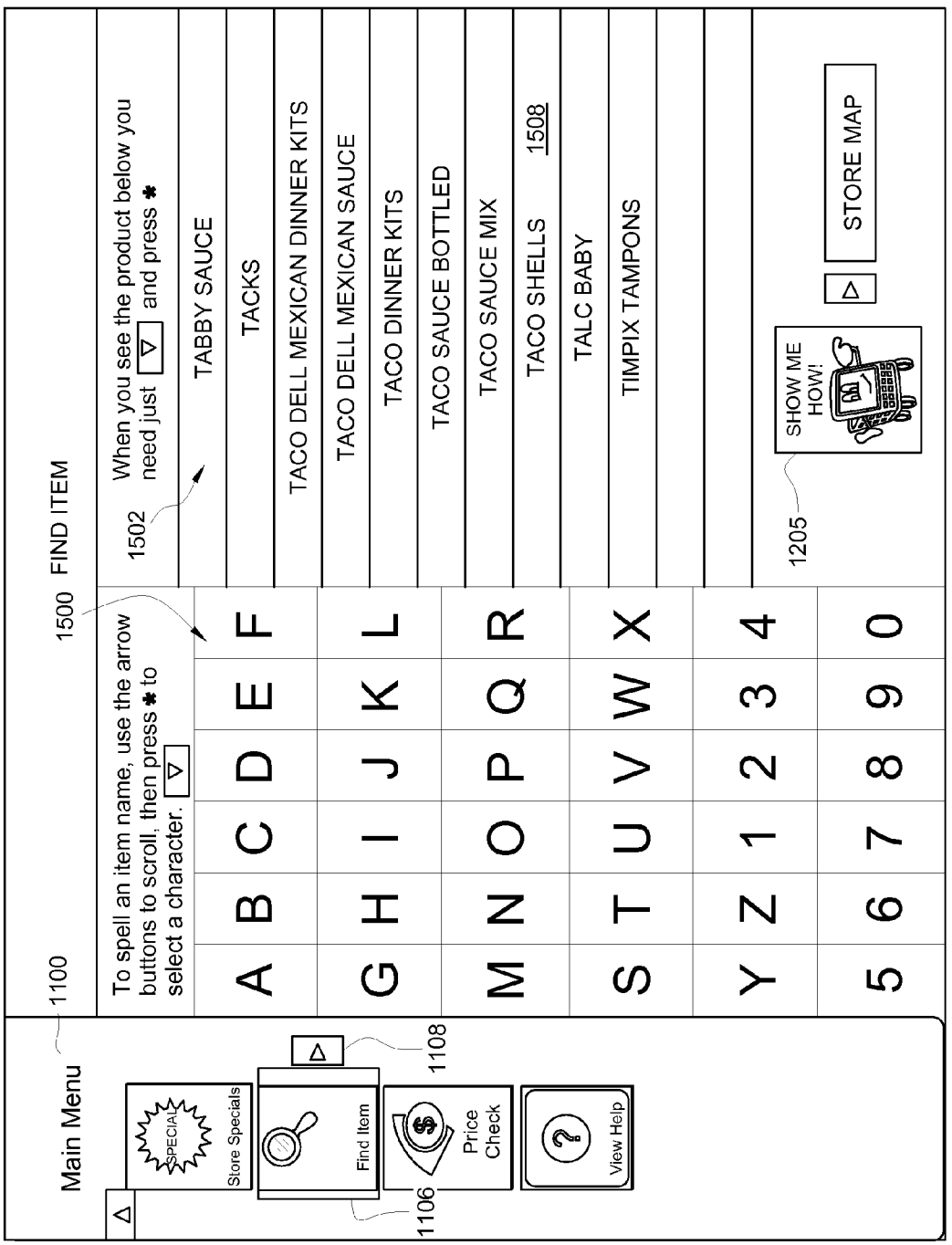
Main Menu
1100
FIND ITEM
1500
To spell an item name, use the arrow buttons to scroll, then press * to select a character.
When you see the product below you need just and press *
1502
TABBY SAUCE
TACKS
TACO DELL MEXICAN DINNER KITS
TACO DELL MEXICAN SAUCE
TACO DINNER KITS
TACO SAUCE BOTTLED
TACO SAUCE MIX
TACO SHELLS
1508
TALC BABY
TIMPIX TAMPONS
SHOW ME HOW!
1205
STORE MAP
A B C D E F
G H I J K L
M N O P Q R
S T U V W X
Y Z 1 2 3 4
5 6 7 8 9 0
Store Specials
Find Item
Price Check
View Help
1106
1108
1200
1201
1202

FIG. 27A

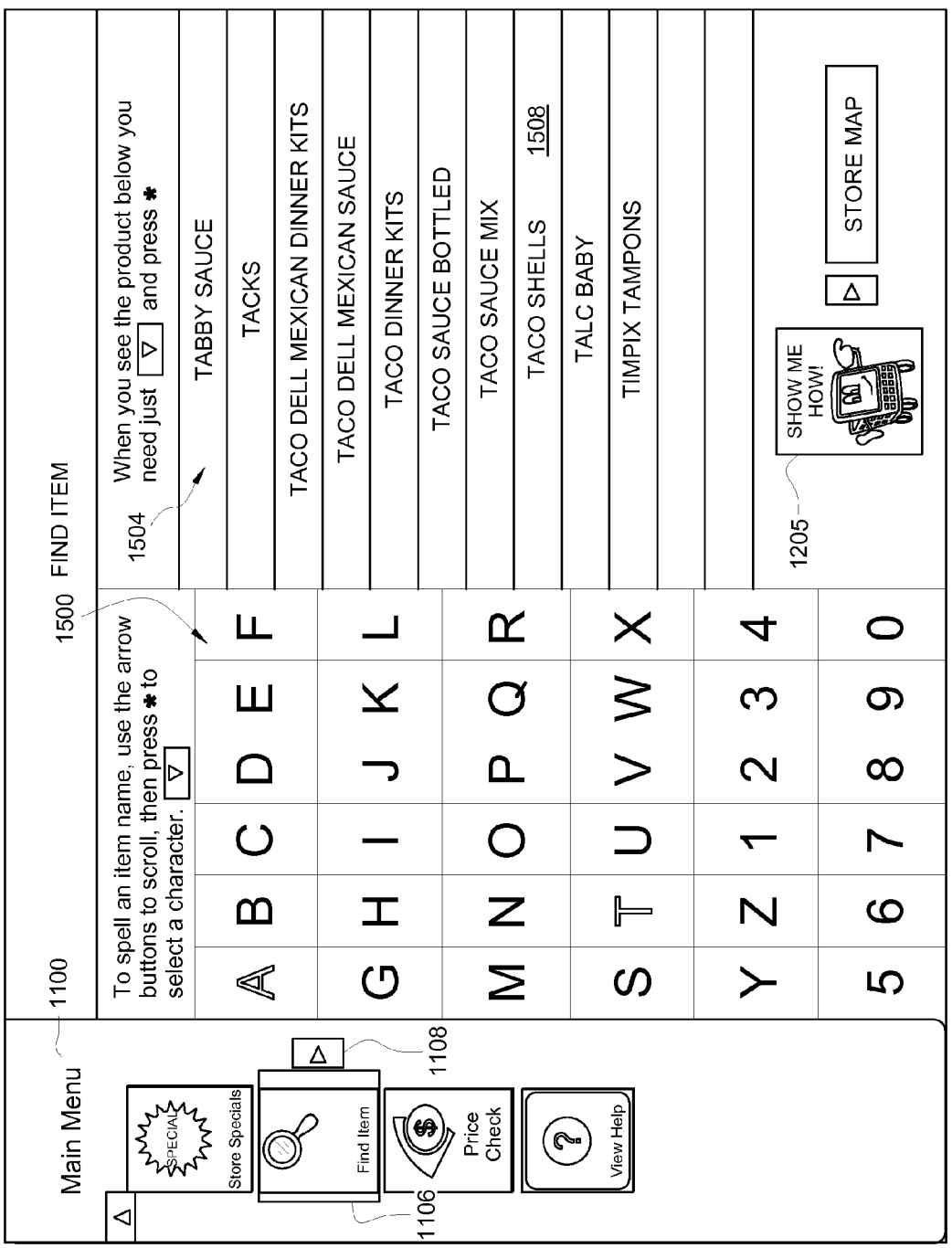
Main Menu
1100
FIND ITEM
1500
To spell an item name, use the arrow buttons to scroll, then press ✱ to select a character.
When you see the product below you need just and press ✱
1504
TABBY SAUCE
TACKS
TACO DELL MEXICAN DINNER KITS
TACO DELL MEXICAN SAUCE
TACO DINNER KITS
TACO SAUCE BOTTLED
TACO SAUCE MIX
TACO SHELLS
1508
TALC BABY
TIMPIX TAMPONS
SHOW ME HOW!
1205
STORE MAP
Store Specials
Find Item
1106
1108
Price Check
View Help
A B C D E F
G H I J K L
M N O P Q R
S T U V W X
Y Z 1 2 3 4
5 6 7 8 9 0
1200
1201
1202

FIG. 27B

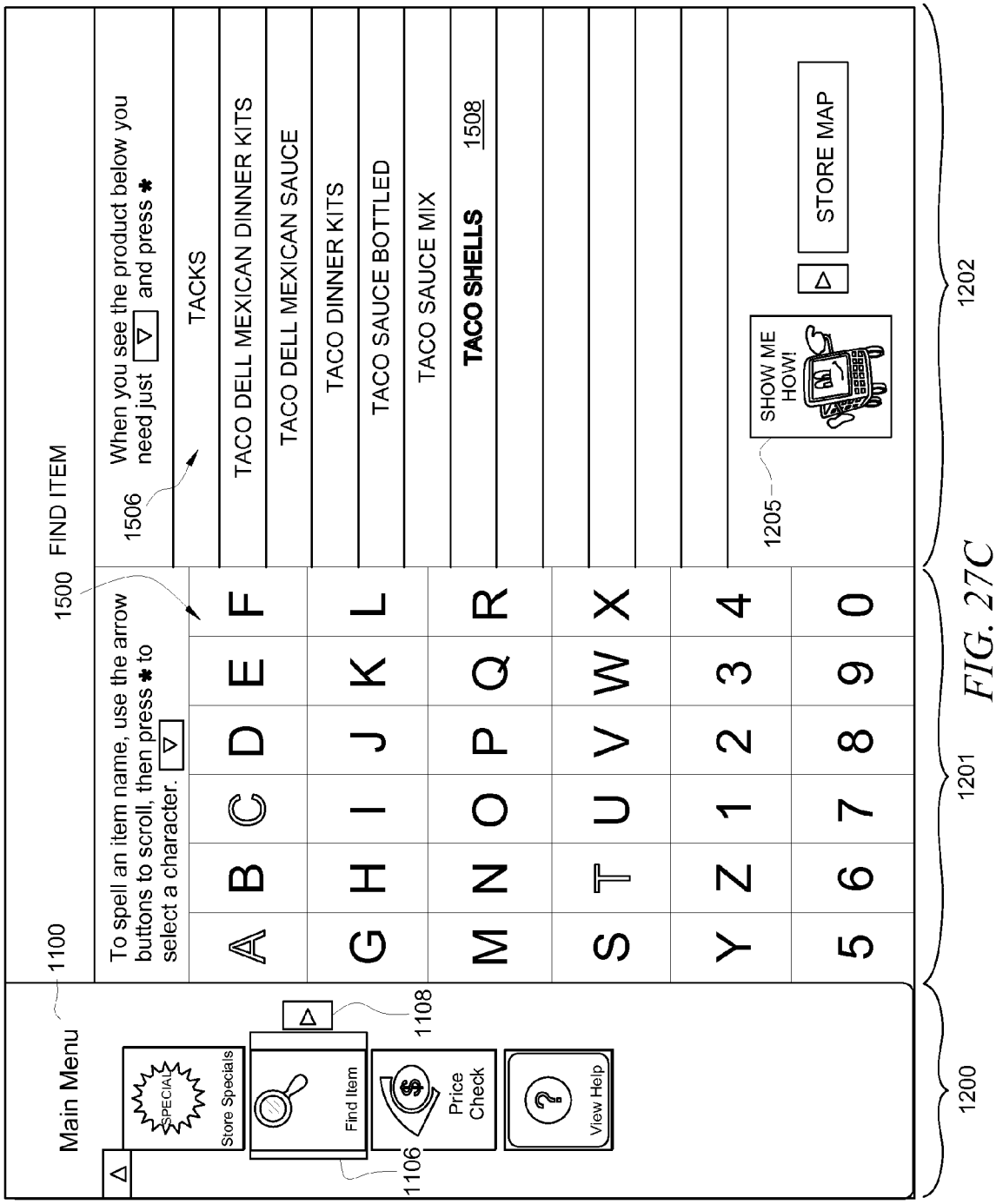
1100
Main Menu
1500
FIND ITEM
To spell an item name, use the arrow buttons to scroll, then press * to select a character.
1506
When you see the product below you need just and press *
TACKS
TACO DELL MEXICAN DINNER KITS
TACO DELL MEXICAN SAUCE
TACO DINNER KITS
TACO SAUCE BOTTLED
TACO SAUCE MIX
TACO SHELLS
1508
SHOW ME HOW!
1205
STORE MAP
A B C D E F
G H I J K L
M N O P Q R
S T U V W X
Y Z 1 2 3 4
5 6 7 8 9 0
SPECIAL
Store Specials
Find Item
1106
1108
Price Check
View Help
1200
1201
1202

FIG. 27C

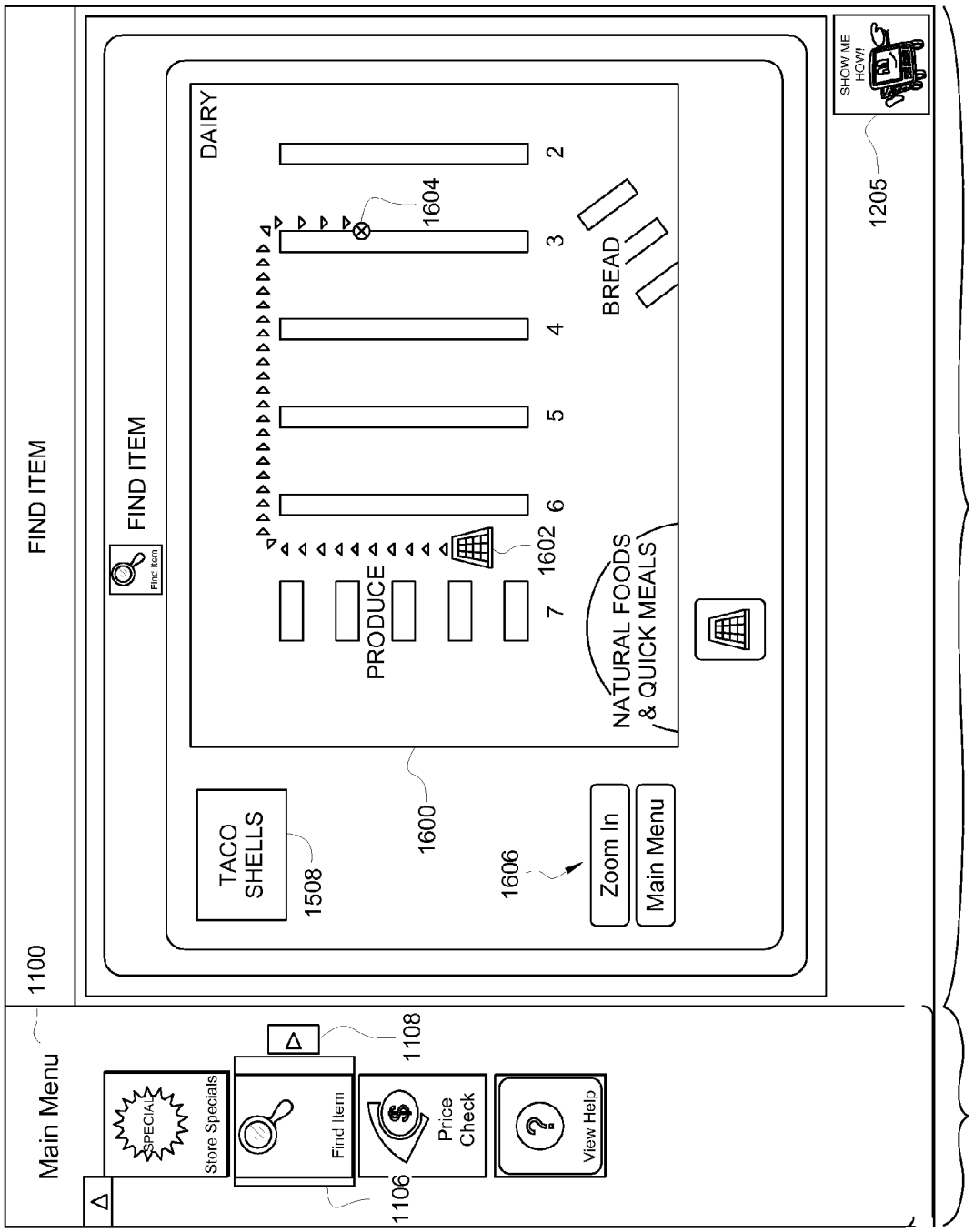
FIND ITEM
FIND ITEM
Find Item
DAIRY
2
3
4
5
6
7
1604
BREAD
PRODUCE
1602
NATURAL FOODS
& QUICK MEALS
TACO
SHELLS
1508
1600
1606
Zoom In
Main Menu
SHOW ME
HOW!
1205
1201
1100
Main Menu
SPECIAL
Store Specials
Find Item
1108
Price
Check
View Help
1106
1200

FIG. 28

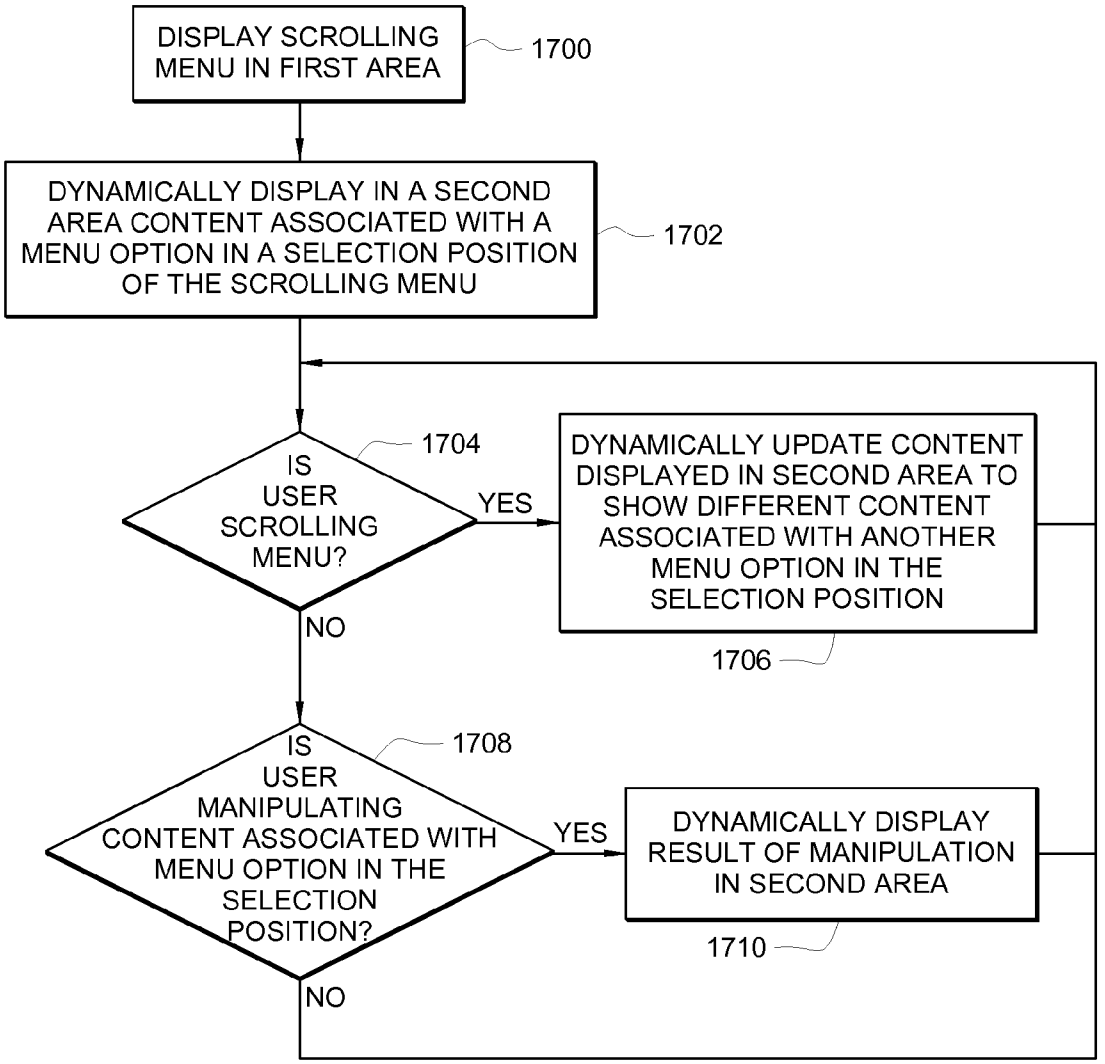
DISPLAY SCROLLING MENU IN FIRST AREA
1700
DYNAMICALLY DISPLAY IN A SECOND AREA CONTENT ASSOCIATED WITH A MENU OPTION IN A SELECTION POSITION OF THE SCROLLING MENU
1702
IS USER SCROLLING MENU?
1704
YES
NO
DYNAMICALLY UPDATE CONTENT DISPLAYED IN SECOND AREA TO SHOW DIFFERENT CONTENT ASSOCIATED WITH ANOTHER MENU OPTION IN THE SELECTION POSITION
1706
IS USER MANIPULATING CONTENT ASSOCIATED WITH MENU OPTION IN THE SELECTION POSITION?
1708
YES
NO
DYNAMICALLY DISPLAY RESULT OF MANIPULATION IN SECOND AREA
1710

FIG. 29

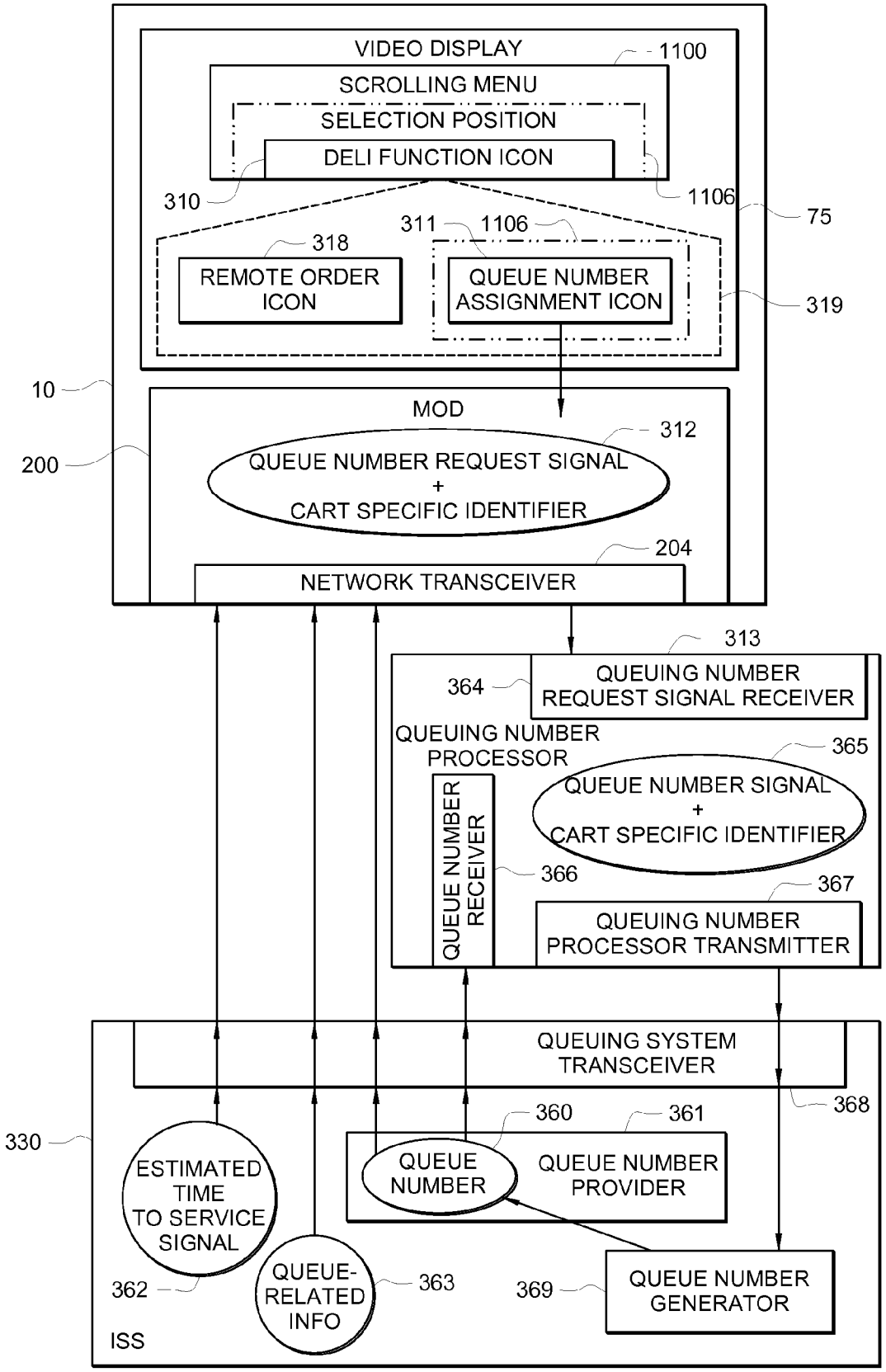
VIDEO DISPLAY
1100
SCROLLING MENU
SELECTION POSITION
DELI FUNCTION ICON
310
1106
75
311
1106
318
REMOTE ORDER ICON
QUEUE NUMBER ASSIGNMENT ICON
319
10
MOD
312
200
QUEUE NUMBER REQUEST SIGNAL + CART SPECIFIC IDENTIFIER
204
NETWORK TRANSCEIVER
313
364
QUEUING NUMBER REQUEST SIGNAL RECEIVER
QUEUING NUMBER PROCESSOR
365
QUEUE NUMBER SIGNAL + CART SPECIFIC IDENTIFIER
QUEUE NUMBER RECEIVER
366
367
QUEUING NUMBER PROCESSOR TRANSMITTER
QUEUING SYSTEM TRANSCEIVER
368
360
361
330
ESTIMATED TIME TO SERVICE SIGNAL
QUEUE NUMBER
QUEUE NUMBER PROVIDER
QUEUE-RELATED INFO
363
362
369
QUEUE NUMBER GENERATOR
ISS

FIG. 30

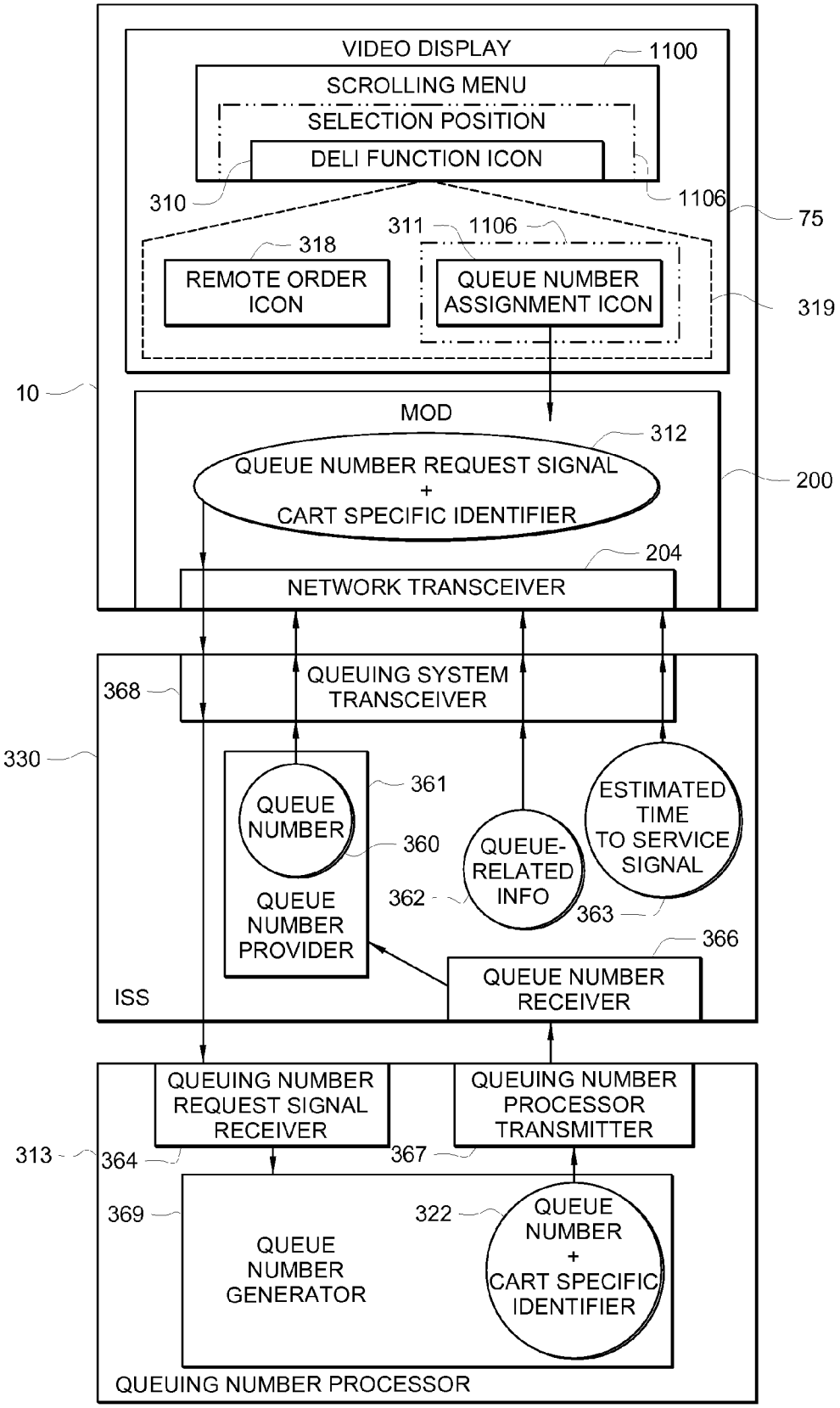
VIDEO DISPLAY
1100
SCROLLING MENU
SELECTION POSITION
DELI FUNCTION ICON
310
1106
75
311
1106
318
REMOTE ORDER ICON
QUEUE NUMBER ASSIGNMENT ICON
319
10
MOD
312
QUEUE NUMBER REQUEST SIGNAL + CART SPECIFIC IDENTIFIER
200
204
NETWORK TRANSCEIVER
368
QUEUING SYSTEM TRANSCEIVER
330
QUEUE NUMBER
361
360
QUEUE NUMBER PROVIDER
QUEUE-RELATED INFO
362
ESTIMATED TIME TO SERVICE SIGNAL
363
366
QUEUE NUMBER RECEIVER
ISS
QUEUING NUMBER REQUEST SIGNAL RECEIVER
QUEUING NUMBER PROCESSOR TRANSMITTER
313
364
367
369
QUEUE NUMBER GENERATOR
322
QUEUE NUMBER + CART SPECIFIC IDENTIFIER
QUEUING NUMBER PROCESSOR

FIG. 31

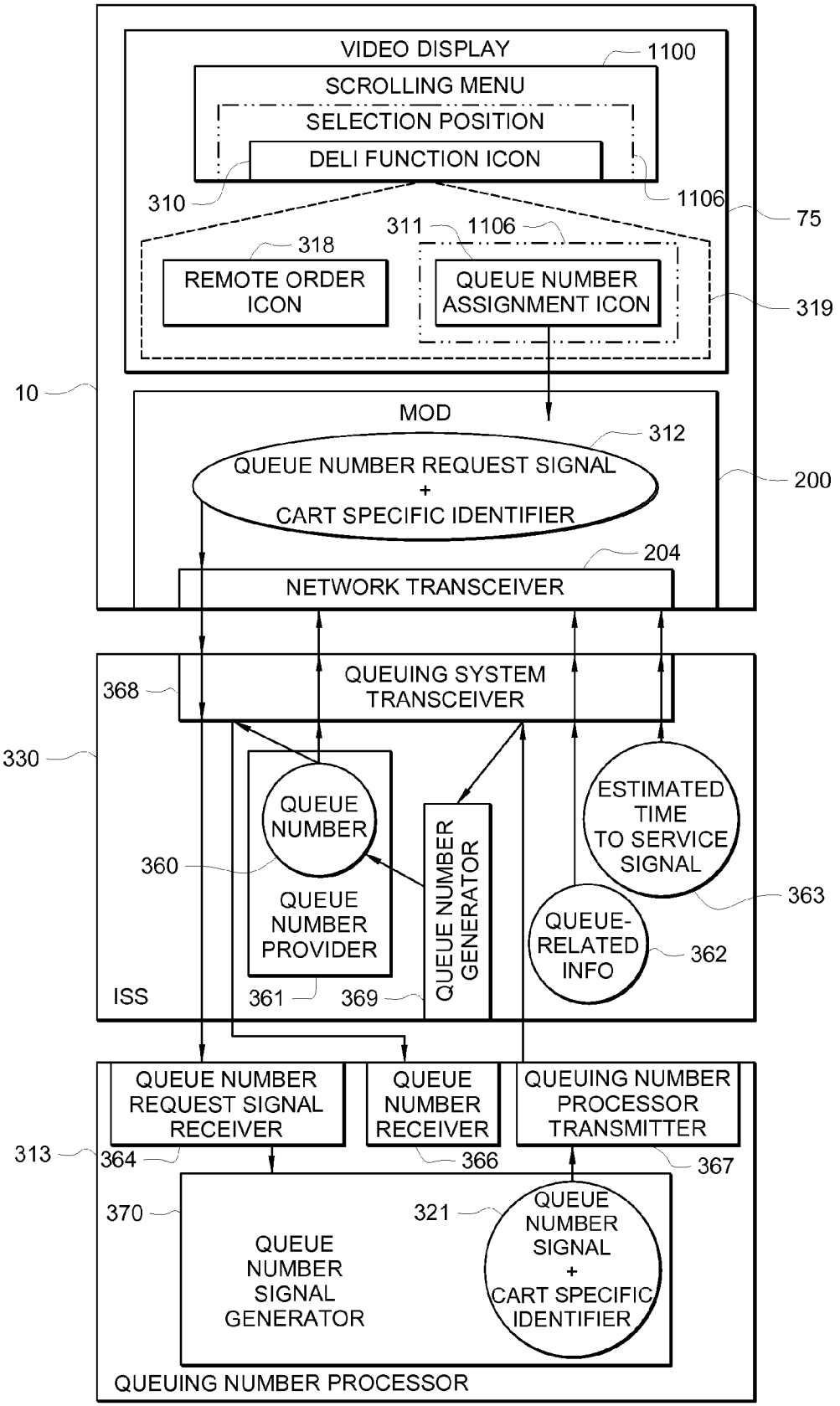
VIDEO DISPLAY
1100
SCROLLING MENU
SELECTION POSITION
DELI FUNCTION ICON
310
1106
75
311
1106
318
REMOTE ORDER ICON
QUEUE NUMBER ASSIGNMENT ICON
319
10
MOD
312
QUEUE NUMBER REQUEST SIGNAL + CART SPECIFIC IDENTIFIER
200
204
NETWORK TRANSCEIVER
QUEUING SYSTEM TRANSCEIVER
368
330
QUEUE NUMBER
360
QUEUE NUMBER PROVIDER
QUEUE NUMBER GENERATOR
ESTIMATED TIME TO SERVICE SIGNAL
363
QUEUE-RELATED INFO
362
ISS
361
369
QUEUE NUMBER REQUEST SIGNAL RECEIVER
QUEUE NUMBER RECEIVER
QUEUING NUMBER PROCESSOR TRANSMITTER
313
364
366
367
370
321
QUEUE NUMBER SIGNAL GENERATOR
QUEUE NUMBER SIGNAL + CART SPECIFIC IDENTIFIER
QUEUING NUMBER PROCESSOR

FIG. 32

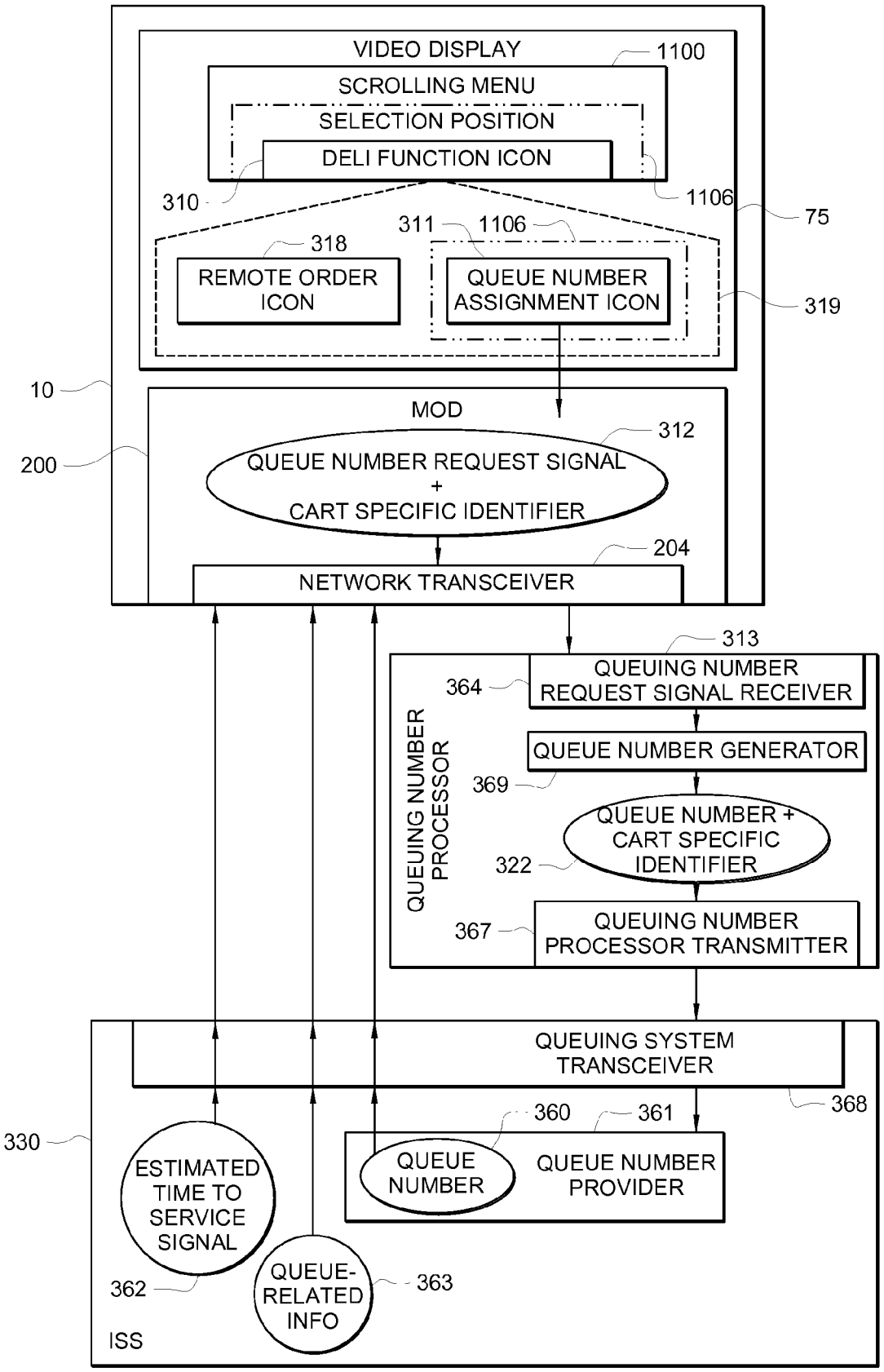
VIDEO DISPLAY
1100
SCROLLING MENU
SELECTION POSITION
DELI FUNCTION ICON
310
1106
75
311
1106
318
REMOTE ORDER ICON
QUEUE NUMBER ASSIGNMENT ICON
319
10
MOD
312
200
QUEUE NUMBER REQUEST SIGNAL + CART SPECIFIC IDENTIFIER
204
NETWORK TRANSCEIVER
313
364
QUEUING NUMBER REQUEST SIGNAL RECEIVER
QUEUE NUMBER GENERATOR
369
QUEUING NUMBER PROCESSOR
QUEUE NUMBER + CART SPECIFIC IDENTIFIER
322
367
QUEUING NUMBER PROCESSOR TRANSMITTER
QUEUING SYSTEM TRANSCEIVER
368
360
361
330
ESTIMATED TIME TO SERVICE SIGNAL
QUEUE NUMBER
QUEUE NUMBER PROVIDER
362
QUEUE-RELATED INFO
363
ISS

FIG. 33

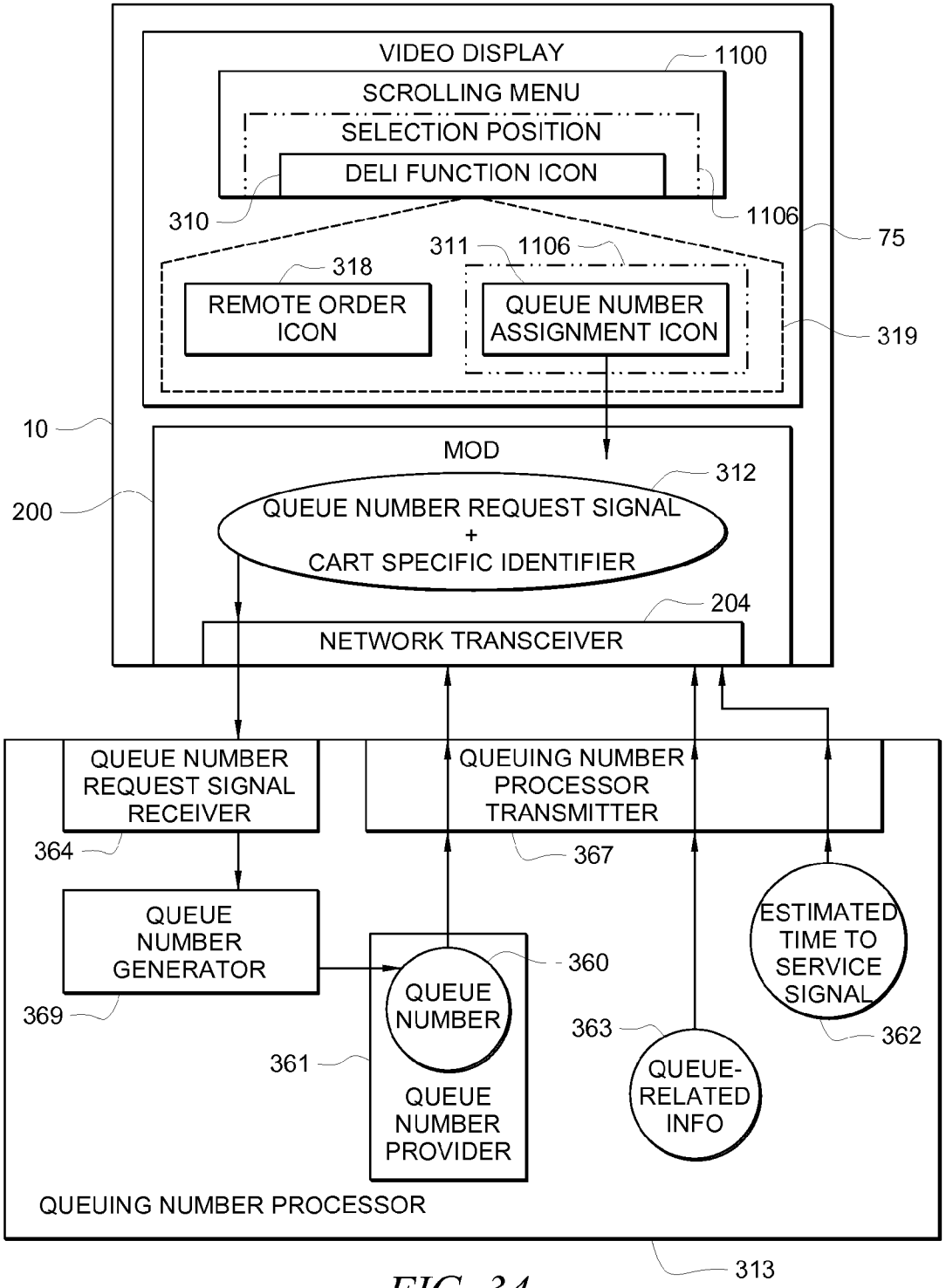
VIDEO DISPLAY
1100
SCROLLING MENU
SELECTION POSITION
DELI FUNCTION ICON
310
1106
75
311
1106
318
REMOTE ORDER ICON
QUEUE NUMBER ASSIGNMENT ICON
319
10
MOD
312
200
QUEUE NUMBER REQUEST SIGNAL
+
CART SPECIFIC IDENTIFIER
204
NETWORK TRANSCEIVER
QUEUE NUMBER REQUEST SIGNAL RECEIVER
QUEUING NUMBER PROCESSOR TRANSMITTER
364
367
QUEUE NUMBER GENERATOR
ESTIMATED TIME TO SERVICE SIGNAL
360
QUEUE NUMBER
369
363
362
361
QUEUE-RELATED INFO
QUEUE NUMBER PROVIDER
QUEUING NUMBER PROCESSOR
313

FIG. 34

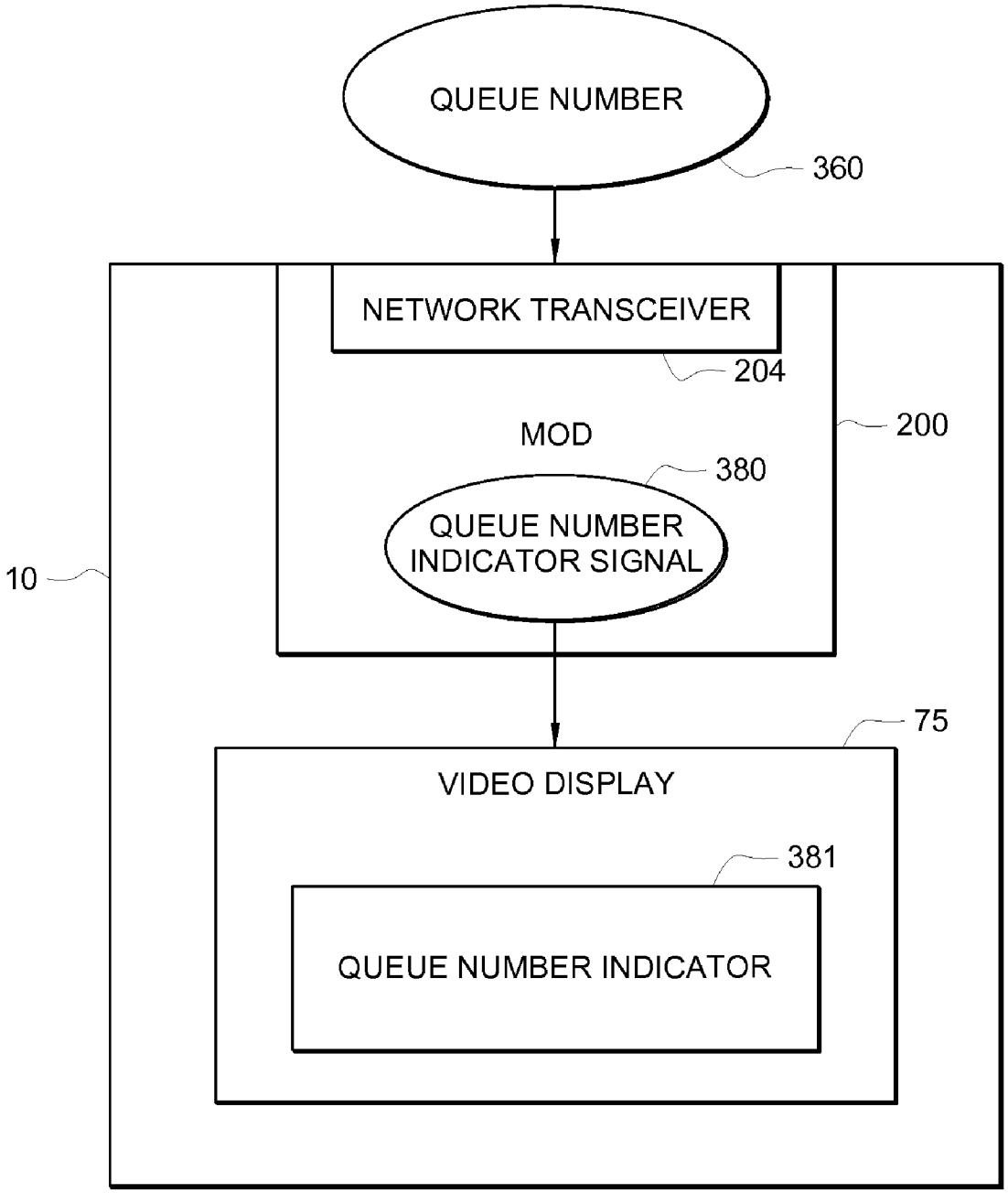
QUEUE NUMBER
360
NETWORK TRANSCEIVER
204
MOD
200
380
QUEUE NUMBER
INDICATOR SIGNAL
10
75
VIDEO DISPLAY
381
QUEUE NUMBER INDICATOR

FIG. 35

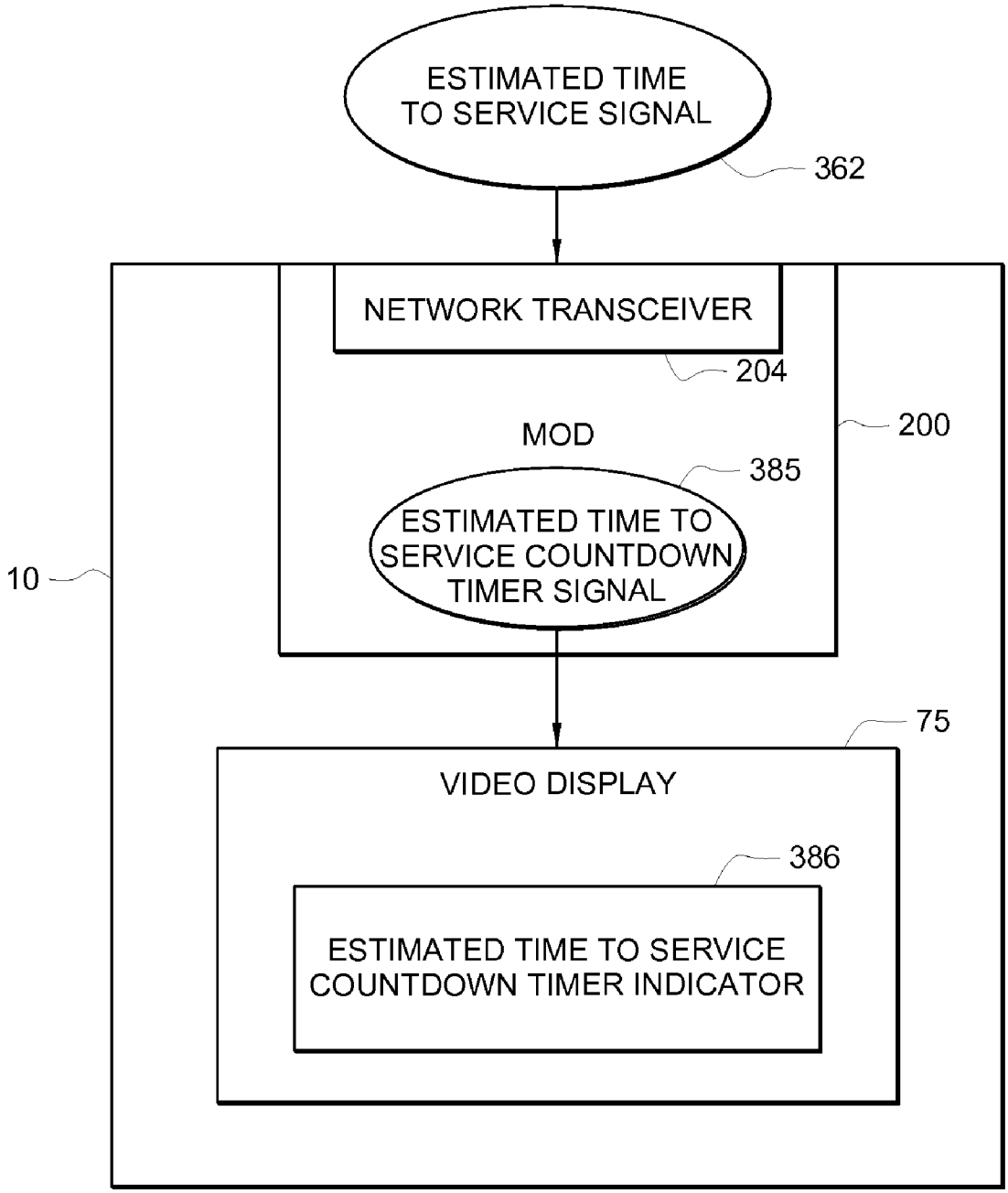
ESTIMATED TIME
TO SERVICE SIGNAL
362
NETWORK TRANSCEIVER
204
MOD
200
385
ESTIMATED TIME TO
SERVICE COUNTDOWN
TIMER SIGNAL
10
75
VIDEO DISPLAY
386
ESTIMATED TIME TO SERVICE
COUNTDOWN TIMER INDICATOR

FIG. 36

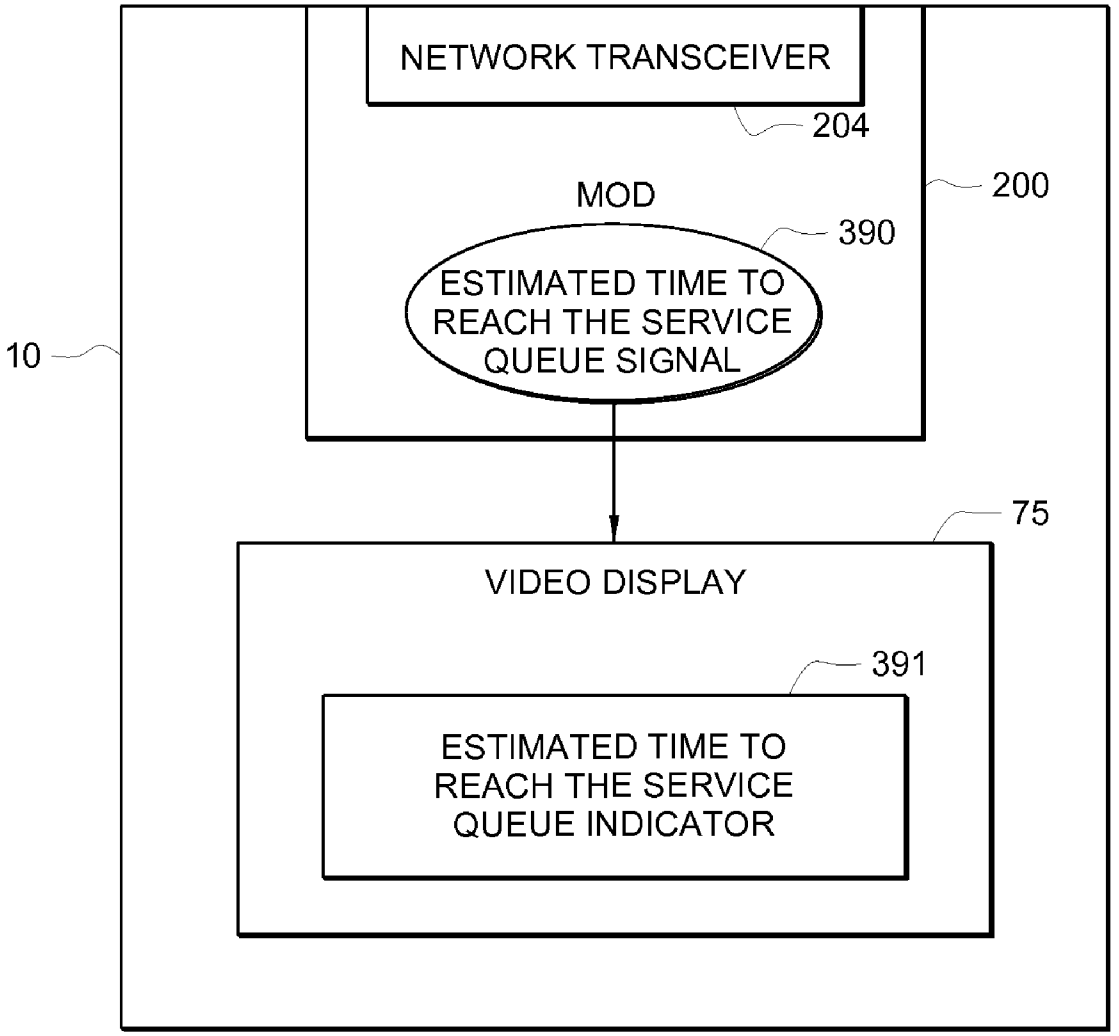
NETWORK TRANSCEIVER
204
200
MOD
390
ESTIMATED TIME TO REACH THE SERVICE QUEUE SIGNAL
10
75
VIDEO DISPLAY
391
ESTIMATED TIME TO REACH THE SERVICE QUEUE INDICATOR

FIG. 37

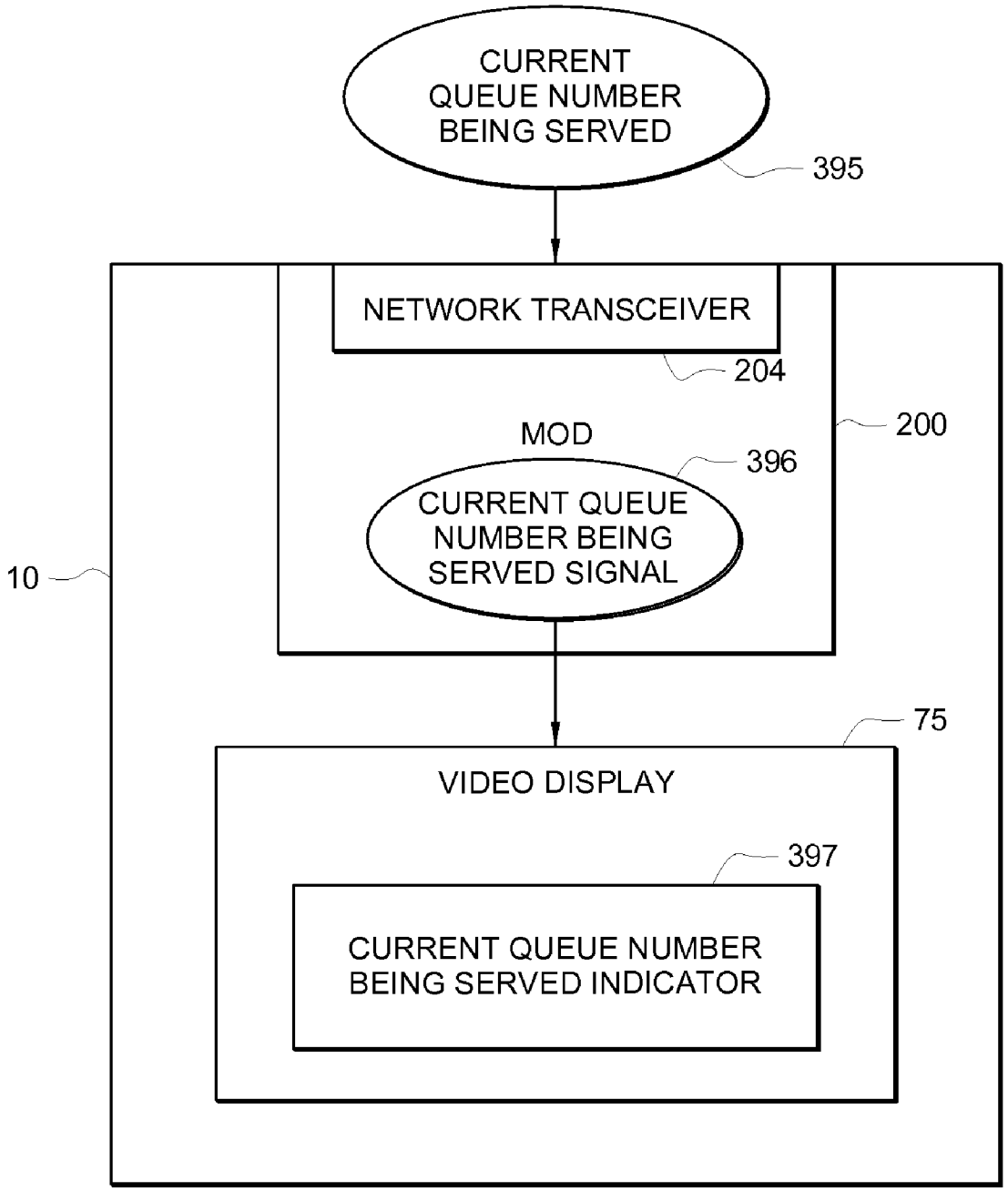
CURRENT
QUEUE NUMBER
BEING SERVED
395
NETWORK TRANSCEIVER
204
200
MOD
396
CURRENT QUEUE
NUMBER BEING
SERVED SIGNAL
10
75
VIDEO DISPLAY
397
CURRENT QUEUE NUMBER
BEING SERVED INDICATOR

FIG. 38

BI-DIRECTIONAL CHARGING/INTEGRATED POWER MANAGEMENT UNIT

FIELD OF THE INVENTION

[0001] The present disclosure is directed to a media enhanced shopping cart system, and more particularly, but not by way of limitation, to a system and method for providing information such as advertising to a consumer as a shopping cart is navigated within a store.

BACKGROUND OF THE INVENTION

[0002] In today's media market, measuring efficacy of advertising is difficult. Advertisers are spending billions of dollars on television, radio, and print with little return on investment, and they have little assurance that consumers will actually see advertisements, much less make purchasing decisions impacted by them. Thus, advertisers and stores are constantly searching for new and related advertising venues, and in particular those positioned at, or in close proximity to, the point of purchase location. To wit, the traditional shopping cart is an underutilized advertising medium. The shopping cart is the one venue that continually moves with the consumer as they navigate the store. Thus, the shopping cart provides an advertising venue with opportunity to improve the shopping experience of the consumer.

[0003] The present disclosure is aimed to address needs of advertisers, retailers, and consumers. Advertisers wish to 1) display ads at the most effective location and time, at the consumer's point of purchase, 2) specifically measure the effectiveness of advertising campaigns, and 3) improve return on advertisement investment dollars. Retailers wish to 1) increase sales, 2) share in advertising revenue, 3) reduce labor costs, 4) create a consumer friendly environment with less advertisement clutter, 5) enhance their store image and 6) make improvements that are compatible with existing solutions. Consumers wish to 1) have a pleasant and efficient shopping experience, and 2) save money on items that they need or want.

SUMMARY OF THE INVENTION

[0004] According to one embodiment, a media enhanced shopping cart system is provided. The media enhanced shopping cart system comprises a shopping cart comprising a frame, a basket, a handle, a base tray, a plurality of wheels, a read component for performing a proximity scan of the shopping cart, a locationing component for determining a location of the shopping cart within a store based on the scan, and a display component for displaying at least one advertisement for a product based on the location of the shopping cart within the store, wherein the locationing component is further operable to determine a location of the product within the store relative to the shopping cart based on the scan, and wherein the display component is further operable to display an indication of the location of the advertised product relative to the location of the shopping cart.

[0005] In another embodiment, a method is provided. The method comprises performing a proximity scan from a shopping cart, determining a location of the cart within a store based on the scan; displaying at least one product advertisement based on the location of the cart, correlating a location of an advertised product with the location of the cart, and displaying an indication of the location of the advertised product with respect to the location of the shopping cart.

[0006] These and other features and advantages will be more clearly understood from the following detailed description taken in conjunction with the accompanying drawings and claims.

BRIEF DESCRIPTION OF THE DRAWINGS

[0007] For a more complete understanding of the present disclosure and the advantages thereof, reference is now made to the following brief description, taken in connection with the accompanying drawings and detailed description, wherein like reference numerals represent like parts.

[0008] FIG. **1** is a side view of a media enabled shopping cart according to an embodiment of the present disclosure.

[0009] FIG. **2** shows a view from the nose of a media enabled shopping cart according to an embodiment of the present disclosure.

[0010] FIG. **3**A illustrates a rear view of a media enabled shopping cart according to an embodiment of the present disclosure.

[0011] FIG. **3**B is a close up, rear view of a rear caster wheel for a media enabled shopping cart.

[0012] FIG. **4** is a block diagram of a modular device of a media enabled shopping cart according to an embodiment of the present disclosure.

[0013] FIG. **5** shows an exemplary display according to an embodiment of the present disclosure.

[0014] FIG. **6** illustrates a front view of a media enabled shopping cart recharging in a recharge corral according to an embodiment of the present disclosure.

[0015] FIG. **7** is an exploded cutaway view of a media enabled shopping cart engaged in a recharge corral according to an embodiment of the present disclosure.

[0016] FIG. **8**A shows a side view of a charge rail system for recharging the battery of one or more carts according to an embodiment of the present disclosure.

[0017] FIG. **8**B illustrates a side view of two charge rail segments forming a single recharge stall according to an embodiment of the present disclosure.

[0018] FIG. **8**C illustrates a front view of a media enabled shopping cart recharging in a recharge corral according to an alternative embodiment of the present disclosure.

[0019] FIGS. **8**D and **8**E show a perspective view of a contact plate cover in a closed and open position, respectively.

[0020] FIG. **9** is an exemplary view, defining a field of vision of a consumer using a media enabled shopping cart according to an embodiment of the present disclosure.

[0021] FIG. **10** shows a detailed view of a video display of a media enabled shopping cart according to an embodiment of the present disclosure.

[0022] FIG. **11** illustrates the nose of the media enabled shopping cart with a folding video display according to an embodiment of the present disclosure.

[0023] FIG. **12** is an exemplary view of a plurality of carts nested together for storage according to an embodiment of the present disclosure.

[0024] FIG. **13** shows a detailed view of the video display according to an embodiment of the present disclosure.

[0025] FIG. **14** illustrates an exploded view of the video display components according to an embodiment of the present disclosure.

[0026] FIG. **15** is an overhead view of the media enabled shopping cart when reading one or more RFID tags affixed to objects for locating the cart in the store according to an embodiment of the present disclosure.

[0027] FIG. **16** shows an exemplary view of an advertising display on the video display according to an embodiment of the present disclosure.

[0028] FIG. **17** illustrates the overall system of the media enabled shopping cart in a store network system according to an embodiment of the present disclosure.

[0029] FIG. **18** is an illustrative view of the media enabled shopping cart in a store network system according to an embodiment of the present disclosure.

[0030] FIG. **19** shows a user interface including a voice activated interface, a five-way navigation device, and a bar code scanner grouped in a pod according to an embodiment of the present disclosure.

[0031] FIG. **20**A is a front view of a bowtie shaped aperture for an RFID antenna.

[0032] FIG. **20**B is a front view of a slot shaped aperture for an RFID antenna.

[0033] FIG. **20**C is a top view of a radiation pattern emanated from the aperture of FIG. **20**A or **20**B.

[0034] FIG. **20**D is a side view of a radiation pattern emanated from the aperature of FIG. **20**A or **20**B.

[0035] FIGS. **21**A-F illustrate various graphical user interfaces (GUIs) to be presented via a video display to a consumer user of the media enabled shopping cart.

[0036] FIG. **22** illustrates a graphical user interfaces (GUI) to be presented via a video display to an employee user of the media enabled shopping cart.

[0037] FIG. **23** illustrates an exemplary scrolling menu according to an embodiment of the present disclosure.

[0038] FIG. **24** illustrates an exemplary display including the price check function associated content according to an embodiment of the present disclosure.

[0039] FIG. **25** illustrates an exemplary display including the price check function resulting content according to an embodiment of the present disclosure.

[0040] FIG. **26** illustrates an exemplary display including the store specials function associated content according to an embodiment of the present disclosure.

[0041] FIGS. **27**A-C illustrate exemplary displays including the item finder function associated content according to an embodiment of the present disclosure.

[0042] FIG. **28** illustrates an exemplary display including the item finder function resulting content according to an embodiment of the present disclosure.

[0043] FIG. **29** illustrates an exemplary method according to an embodiment of the present disclosure.

[0044] FIG. **30** illustrates a block diagram of a cart enabled for remote queuing according to an embodiment of the present disclosure.

[0045] FIG. **31** illustrates still another block diagram of a cart enabled for remote queuing.

[0046] FIG. **32** illustrates yet another block diagram of a cart enabled for remote queuing.

[0047] FIG. **33** illustrates still another block diagram of a cart enabled for remote queuing.

[0048] FIG. **34** illustrates again another block diagram of a cart enabled for remote queuing.

[0049] FIGS. **35-38** illustrate a series of block diagrams reflecting various embodiments of cart-based information presentations of the present disclosure.

DETAILED DESCRIPTION OF THE PREFERRED EMBODIMENTS

[0050] It should be understood at the outset that although certain exemplary implementations of embodiments of the present disclosure is illustrated below, the present system may be implemented using any number of techniques, whether currently known or in existence. The present disclosure should in no way be limited to the exemplary implementations, drawings, and techniques illustrated below, including the exemplary designs and implementations illustrated and described herein.

DETAILED DESCRIPTION OF INVENTION

[0051] FIG. **1** is a side view, FIG. **2** is a front view, and FIG. **3**A is a rear view of a shopping cart **10** having a basket **20** attached to a frame **30**. The frame **30** further comprises a base **35** having base side members **32**, **33** and front base member **34** extending between the base side members **32**, **33** at the front or nose **45** of the cart. The frame **30** further comprises side members **16**, **17** extending upward from the base **35** on each side of the shopping cart **10**. At the rear **25** of the cart, a handle **22** extends between the side members **16**, **17** at the upper end **18** of the side members. The basket **20** may, but need not necessarily, have channels or grooves **57**, **58** configured for receipt of the side members **16**, **17**. Side members **16**, **17** are shown as separate members having an opening **19** there between, but in alternative embodiments a single or solid member may be used in place of separate members **16**, **17**. In an embodiment, the frame, including base **35**, side members **16**, **17**, and handle **22**, is formed as a single, unified member, for example by molding the entire frame from plastic.

[0052] In an embodiment, substantially the entire cart **10** is made of plastic, also referred to herein as a plastic cart, and in particular the basket **20** consists essentially of plastic, along with the frame **30** and base tray **50**. Various carts in the related art have a plastic basket supported by a metal frame, however, a plastic cart **10** of the present disclosure substantially comprises plastic in that the basket **20**, frame **30** and base tray **50** are all made of plastic, and minor components, such as screws or other connectors, the wheels **37** and **38**, and the like may be made of plastic or a metal. In an embodiment, the plastic used in the cart **10** comprises a high-density polyethylene ("HDPE"). The plastic is flame retardant and, in an embodiment, includes MICROBAN™, a product to inhibit the growth of bacteria, which aids in keeping the cart **10** cleaner. The substantially all plastic composition of the cart **10** additionally reduces or eliminates RFID interference as will be discussed in more detail herein.

[0053] In an embodiment, substantially the entire cart **10** is made of metal or a combination of plastic and metal, and in particular the basket **20** consists essentially of metal or a combination of plastic and metal, along with the frame **30** and base tray **50**. In an embodiment, the cart **10** may have a plastic basket supported by a metal frame, and minor components, such as screws or other connectors, the wheels **37** and **38**, and the like may be made of plastic or a metal. Such a cart is in usage, however may be retrofitted with the media enhancements, as will be discussed in more detail below.

[0054] A lower or base tray **50** is attached to the base **35** and may be supported by a front cross member **56** and a rear cross member **53** extending between the base side members **32**, **33**. Front wheels **37** are attached to the front of the base **35**, for example at or near the intersection of the base side members **32**, **33** and the front base member **34**. Rear wheels **38** are attached to the rear of the base **35**, for example at or near the rearward end of base side members **32**, **33**. The front wheels, the rear wheels, or both may be casters comprised of metal and/or plastic.

[0055] The basket **20** further comprises a bottom **21**; side walls **23**, **24**; side upper edges **26**, **27**; a front wall **28**; a front edge **29**; and a rear wall **31**. The bottom **21** and walls **23** and **24**, front side wall **28**, and rear side wall **31** define an interior **54** of the basket **20**, and the edges **26** and **27** and front edge **29** define an upper boundary for the interior **54** of the basket **20**. The exterior of the basket **20** refers to areas beyond the interior of the basket as previously defined. In an embodiment, a plane containing the upper edges **26** and **27** and front edge **29** defines the upper boundary for the interior **54** of the basket **20**. The rear side wall **31** may be hinged via hinges **51**, **52** such that the lower edge **55** of rear side wall **31** may swing upward into the interior **54** of the basket to receive the front side wall **28** of another cart, thereby allowing the carts to be nested for storage as shown in FIG. **12**.

[0056] The basket **20** may further comprise a child seat **60** having a seat back **61** and a seat bottom **62**. The rear side wall **31** may have openings **63**, **64** to accommodate a child's legs when seated in seat **60**. The seat bottom **62** may include a hinged panel **65** that may be flipped up to close openings **63**, **64** when the seat **60** is not occupied. The seat back **61** may be hinged at or near the interior bottom of rear side wall **31** such that when unneeded the seat **60** may fold about flush with the rear side wall **31** to increase storage area in the interior **54** of the basket **20**.

[0057] In an embodiment, the cart **10** further comprises a bumper handle **100**. The bumper handle **100** may comprise a plastic coated with neoprene, rubber or a similar coating product, or may comprise an uncoated plastic similar to that of which the basket **20** and/or frame **30** is comprised. The bumper handle **100** may comprise an integrated portion of the basket **20**, or alternatively, may be coupled to the basket **20** or frame **30**. In an embodiment, the bumper handle **100** is coupled to an upper edge **26** or **27**, or front edge **29** of the basket **20**. Various means for attaching the bumper handle **100** may be used in the present disclosure and include but are not limited to clamping, fastening, screwing, gluing, clasping, welding, adhering, and the like. Various attachment devices may be used in the present disclosure and include but are not limited to clamps, fasteners, screws, bolts, glues, clasps, adhesives, and the like. In another embodiment, the bumper handle **100** may comprise an integrated portion of the **28** front side wall **28** of the basket **20** or may comprise an integrated portion of the front edge **29** of the front side wall **28** of the basket **20**.

[0058] In an embodiment, the bumper handle **100** may provide the consumer **85** an option for pulling the cart **10** from a nested position with one or more other carts, without pulling the cart **10** from a nested position by way of pulling on the video display **75**. The bumper handle **100** may also be used by the consumer **85** to pull the cart **10** at various times while shopping. In an embodiment, the bumper handle **100** may cushion the cart **10** and the video display **75** when a consumer **85** or other individual places the cart **10** into a nested position with one or more other carts. The bumper handle **100** may also act as a bumper to cushion impact of the cart **10** with other objects such as walls, shelves, product displays, vehicles, etc.

[0059] The cart **10** may be enhanced with several additional features, though there is a market for the substantially all plastic cart without media enabling capabilities. The cart **10** may comprise a traditional cart retrofitted with the enhancements described below. A cart **10** having a video display **75** is described by copending U.S. Provisional Application filed Jul. 27, 2005, entitled "Basket Mounted Display for Shopping Cart," incorporated by reference in its entirety. Added media enhancing capabilities may include displaying visual images such as advertising to the consumer **85** based upon the location of the cart **10** within the store, navigating menu options on the video display **75** using either the voice activated interface **120** or a five-position navigation device **123**, scanning products for purchase according to bar codes or RFID tags, enhanced check out at a point of sale, media enhanced shopping cart shopping lists, a product "find" function, and data mining of information pertaining to advertisements displayed to the consumer **85** and which products were actually purchased, and the like, as will be discussed in greater detail herein.

[0060] In various embodiments, the shopping cart system may further comprise an embedded computer module ("ECM") **200**, also referred to as a modular onboard device (MOD), comprising a central processing unit ("CPU") **201**, a local memory **202**, a non-volatile memory **203**, and a network transceiver **204** as shown in the block diagram of FIG. **4**. In an embodiment, the ECM **200** may comprise a chipset further comprising, for example, a microprocessor and a graphics accelerator. In an embodiment, the chipset may comprise an Intel pxa270/2700g xScale chipset or an equivalent or improvement thereof. In an embodiment, the non-volatile memory **203** comprises flash memory, as is well known in the art. In an embodiment, the network transceiver **204** comprises a Wireless Local Area Network ("WLAN") transceiver operable to enable the ECM **200** to communicate with various network components as will be described in greater detail herein. In an embodiment, the network transceiver or a component thereof such as the antenna may be located on the ECM **200**, for example near a front wall of the ECM facing the nose of the cart. In referring to various wireless communications herein, including but not limited to the network transceiver **204**, any suitable wireless communications protocol may be used including but not limited to IEEE 802.11 "wi-fi" standards such as 802.11a/b/g, IEEE 802.15 "Bluetooth," IEEE 802.16 "WiMAX," HomeRF, or combinations thereof. In an embodiment, the network transceiver **204** may be located in video display **75**, for example in the screen housing **92**, **93**, and may be operably coupled to the ECM **200**. The ECM **200** may further comprise a housing **199** comprising a protective, hermetically sealed plastic or other appropriate protective computer packaging. The ECM **200** may be attached to the frame **30** (for example, via connectors **14** as shown in FIG. **12**), the bottom of basket **20**, the base tray **50**, or combinations thereof by various attachment means and devices as described herein. In an embodiment, the housing **199** may be integrally molded as part of a plastic cart **10**, for example integrally molded to the bottom of basket **20**, as part of the frame **30**, as part of the base tray **50**, or combinations thereof. In alternative embodiments, the ECM **200** or com-

ponents thereof may be attached to or integrated with the video display **75**, for example as part of the screen **77** or the base **76**.

[0061] In an embodiment, in local memory **202** or non-volatile memory **203**, the ECM **200** stores various programs and data, such as an operating system, voice recognition software, database software and populated database files, files pertaining to advertising, and an operating system. In an embodiment, the operating system software may be the same as, equivalent to, or an improvement over the Microsoft Win-CE.net (5.0) Operating System utilizing the .NET Compact Framework and SQL Server embedded edition for WinCE along with standard Win corn objects, drivers, and networking tool sets. In an alternative embodiment, the operating system may be Windows XP, Windows XP Embedded, or an equivalent thereof. It should be understood that specific computing equipment and software are disclosed herein as non-limiting examples, and that equivalent or improved components may be substituted as such become available. In an embodiment, the ECM **200** may incorporate the following types of programming: an embedded database engine, a business object layer, a graphic user interface presentation layer (GUI), one or more media display engines, automatic speech recognition engine, a bar code device driver, and an RFID reader driver.

[0062] The Cart Coordinator is an application running on the ECM **200** of the cart **10** that is responsible for keeping the cart's **10** electronic functionalities up-to-date, including all the content (such as advertising) as well as the software (i.e. applications and operating system). One of the many functions of the Cart Coordinator is to allow the cart **10** to communicate with a store's in-store server ("ISS") **330**. In various embodiments, the Cart Coordinator performs some or all of the functionality while the cart **10** is in the cart corral **110**. The Cart Coordinator also maintains communication with the ISS **330** while the cart **10** is out of the cart corral **110**, e.g. during a shopping session. The Cart Coordinator checks the status and version of content and software, and upon finding an item (i.e. content or a piece of software) that needs to be updated, the Cart Coordinator starts a download via the wireless connection.

[0063] The Deployment Manager is another application running on the ECM **200** of the cart **10** that is responsible for installing the software downloaded by the Cart Coordinator on the cart **10**. The Deployment Manager includes the ability to determine whether a change is a minor change such that a simple update may be installed, or a more significant change requiring installation and restart, or a major change, calling for installation of the software followed by rebooting the cart **10**.

[0064] In various embodiments, the Cart Coordinator and the Deployment Manager are functional for synchronizing and updating only when the cart **10** is present in the corral **110**, while in other embodiments, the Cart Coordinator and the Deployment Manager are functional for synchronizing and updating while the cart **10** is not in use but not necessarily present in the corral **110**.

[0065] In various embodiments, the Deployment Manager functions when the cart **10** is located in the cart corral **110**, because it is desirable to make major changes to the cart when the cart **10** is located within the best network coverage, which in some embodiments may be in the cart corral **110**. Additionally, it is undesirable to encumber the cart's **10** assets by downloading while the cart is in use for shopping. Furthermore, the cart **10** has unlimited power when located in the corral **110**, making the corral **110** the preferable location for synchronizing because synchronizing uses a significant amount of power.

[0066] In various embodiments, the Cart Coordinator is additionally responsible for uploads from the cart **10** to the ISS **330**. For example, shop events such as time spent with a certain ad displayed, the path of the cart **10**, items purchased, and the like may be scheduled for upload from the cart **10** to the ISS **330** by the Cart Coordinator.

[0067] In various embodiments, the Cart Coordinator may additionally provide periodic real time updates for items such as new product prices, store specials, and the like that are displayed and/or used by the cart **10**.

[0068] In an embodiment, the ECM **200** may enter a hibernation or sleep mode when the cart **10** is nested with one or more other cart **10**, when the cart **10** is stored, or when the cart **10** is not in motion for a predetermined period of time. In an embodiment, the hibernation or sleep mode may involve powering the ECM **200** down entirely, or partially. In an embodiment, the cart **10** may further comprise one or more motion sensors **36** operable to detect when the cart **10** is in motion. The motion sensor(s) **36** may be located anywhere on the cart **10**. The motion sensor(s) **36** may be located in or on the handle **22** (for example in pod **150**) as shown in FIG. **3**A, the base **35**, or the base tray **50**. Alternatively, the motion sensor(s) **36** may be coupled to wheels **37**, **38** and detect motion of the cart from turning of one or more wheels. Alternatively, the motion sensor(s) **36** may be integrated with a scanner **215**, wherein the motion sensor may serve as a proximity sensor **216** for the scanner and/or a proximity sensor **216** for the scanner may serve as a motion sensor for activating components of the cart. Alternatively, the motion sensors (s) may be located in the ECM **200**, for example a mercury switch or equivalent that detects movement of the cart. The motion sensor(s) activate the ECM **200**, bringing it out of hibernation, when the cart **10** is selected by a consumer **85** from a nested position with one or more other carts, from a cart corral **110**, or when a consumer **85** begins to move an abandoned cart **10** that has not moved for a predetermined length of time. Each of the components operably coupled to or comprising components of the ECM **200**, as described below, may also be re-activated or hibernated along with the ECM **200** when the motion sensor(s) **36** detects that the cart **10** is in motion.

[0069] In an embodiment, the motion sensor(s) **36** may comprise mercury switches placed on the cart **10**, such as in a location on a wheel **38** or caster, or on the basket **20** of the cart **10**, such that when the cart **10** is in motion, the mercury in the switch tilts with the motion of the cart **10** to connect and disconnect the control of the ECM **200** or the various other components.

[0070] In still another embodiment, the motion sensor(s) **36** may comprise one or more magnetic reed switches in addition to or in lieu of mercury switches. In such an embodiment as shown in FIG. **3**B, a magnetic reed switch **180** is located in the frame or caster **182** above each wheel **38**, and an associated magnet **184** is located on the wheel **38** hub, allowing sensing of tire rotation about axle **183** for motion detection. As is well understood in the art, by placing a magnet on a rotating wheel, a "heartbeat" reflecting the rotational speed of the wheel may be determined, with one "beat" each time the magnet rotates past the reed switch, opening or closing it. By placing a pair of these switch and magnet groupings, one at each wheel, the

ECM **200** may receive a signal from the magnetic reed switch via cable or wire **181** running through frame **30** and determine the rotation speed of each wheel when in motion. By comparing rotational speed of adjacent wheels (for example, the two back wheels having a fixed, known position relative to each other), the ECM **200** may additionally determine when the cart turns as well as the speed and direction of turns, providing additional data for use in accurate determination of the location of the cart within the store. Further discussion of the use of magnetic reed switches in locating the cart **10** within the store is included below.

[0071] In an embodiment, the shopping cart system further comprises a correlation component comprising software, hardware or a combination of hardware and software operable to take various data gathered by components of the cart, and correlate one or more of the different types of data. The correlation component may, in an embodiment comprise hardware affixed to the cart with software incorporated therein, or may, in an embodiment, comprise hardware affixed to the cart with software stored in and/or executed from the ECM **200**. In an embodiment, the correlation component may be integrated within the ECM **200**.

[0072] For example, the correlation component is operable to correlate data from the inventory component (discussed in greater detail below) regarding the inventory contained by the shopping cart, with the unique identity of the shopping cart. In such an exemplary embodiment, the correlation component is operably coupled to the inventory component and the ECM **200**, such that as the inventory of the cart **10** is updated, the correlation component correlates the current inventory with the unique identity of the cart **10** and stores the correlation (preferably in the ECM **200**), such that, at the Point of Sale **300**, the ECM **200** may wirelessly communicate the correlation of the inventory and the unique identity of the cart **10**. The correlation component may be further operably coupled to the locationing component, such that the correlation component may correlate the inventory, the unique identity, and the location of the cart, over the course of a shopping trip, store the correlation, and wirelessly communicate the correlation to the Point of Sale **300**.

[0073] For example, the correlation component is operable to correlate data from the inventory component (discussed in greater detail below) regarding the inventory contained by the shopping cart, with data relating to the shopping list component (discussed below). In such an exemplary embodiment, the correlation component is operably coupled to the inventory component, the shopping list component, the ECM **200**, and the video display **75**, such that as the inventory of the cart **10** is updated, the customer shopping list may be updated, as well as the shopping list displayed in the video display **75**. The correlation may be stored in the ECM **200**, or stored elsewhere in the network, associated with a specific consumer, and used to generate shopping lists in the future.

[0074] For example, the correlation component is operable to correlate data from the inventory component (discussed in greater detail below) regarding the inventory contained by the shopping cart, with data relating to which advertisements are displayed to a consumer by the cart. In such an exemplary embodiment, the correlation component is operably coupled to the locationing component, the video display **75** and the ECM **200**, such that the correlation component receives the inventory from the inventory component, correlates it with advertisements that are stored or streamed to the ECM **200**, and stores the correlation. The correlation may then be used in selecting which advertisement chosen from a plurality of advertisements are displayed based on the location of the cart. For example, if the inventory is known to include items for hosting a party, the correlation of the inventory with the advertisements and the location of the cart may be used to display one or more advertisements for additional items used for hosting a party.

[0075] The shopping cart system may further comprise a shopping list component for listing one or more products of a customer shopping list for purchase by the consumer. The shopping list component is operably coupled to the video display **75** of the cart **10** such that the shopping list may be displayed, either prominently, or as a less prominent display, with, for example, a menu of options or advertisements. In an embodiment, the shopping list component may comprise hardware, software, or a combination of hardware and software operable to carry out the function of maintaining, updating, and/or displaying a customer shopping list. In an embodiment, the hardware and software are co-housed and affixed to the cart **10**, while in another embodiment, the hardware may comprise a unit affixed to the cart **10** (as will be discussed below) and the software may be stored and/or executed from a separate unit, such as the ECM **200**, the ISS **330**, POS computer **326** at the Point of Sale **300** or other networked system component, in conjunction with the hardware affixed to the cart.

[0076] In an embodiment, the shopping list component comprises the ECM **200** in conjunction with software operating thereon, populated with a customer shopping list. In an embodiment, the customer shopping list comprises historical data associated with the consumer **85** by way of the consumer's loyalty card, pin code, telephone number or other customer identifier associated with the consumer **85**. The historical data relates to products that the consumer has purchased in the past or products that the consumer has listed in a customer shopping list previously. Consumer identifiers comprise a data reference that is unique to the consumer or their household. For example, a customer loyalty card may be associated with an identification number that is unique to the consumer or their household. Stores often offer customer loyalty cards to consumers, which consumers use in order to enjoy coupons, discounts and other advantages provided by the store to its loyal consumers. The loyalty card may additionally be linked with store services, such as a pharmacy, in-store deli, automotive service station, and the like, to track and record the consumer's needs relating to that service. A consumer may additionally identify themselves to the store using a pin code assigned by the store or their telephone number in order to receive discounts, coupons, and track usage of the store's services. The store may use the identifiers to track shopping of consumers for inventorying purposes as well as targeting advertisements and discounts to consumers based on what they actually buy.

[0077] In an embodiment, the customer shopping list for future shopping trips is generated by the inventory in the cart **10** during a present shopping trip. In such an exemplary embodiment, the shopping list component is operably coupled to the inventory component and the ECM **200** (or other networked component) to store the inventory of the cart **10** during a shopping trip, and store the purchases made based on the inventory at the Point of Sale **300**. In such an embodiment, the stored inventory may be associated with a particular consumer by way of their customer loyalty card, pin code, telephone number or other consumer identifier. The stored

inventory may then be used by the shopping list component to generate a customer shopping list.

[0078] In an embodiment, the customer shopping list may be downloaded from a store website and associated with the consumer's identity, such that when the loyalty card is scanned or other identifier is entered, the customer shopping list becomes available in the cart **10** to the consumer **85**. In such an embodiment, when the consumer identifier is entered or scanned, the list downloaded from the store website may be streamed or wireless communicated from the ISS **330** via the access points to the ECM **200**, and displayed. Alternatively, in an embodiment a shopping list stored in a PDA, handheld computer, mobile telephone or other electronic device may be downloaded to the ECM **200** through wireless, infrared, Bluetooth, and like known techniques, the details of which are not material herein, and the shopping list component will display the downloaded list, and enable the functions described herein. Alternatively, in an embodiment a shopping list may be emailed to the store system for transfer to a cart **10**.

[0079] In still another embodiment, the customer shopping list is generated based one or more products selected by the consumer; wherein the one or more products are selected by the consumer by scanning a bar code on a product, placing a RFID tagged product in the shopping cart **10**, and downloaded by the consumer in a list. In such an embodiment, the ECM **200** is operably coupled to the inventory component to store the identity of products purchased by the consumer before to generate a list. In such an embodiment, the ECM **200** is operable to store the identity of products previously placed in the cart **10** by the consumer to generate a list.

[0080] In an embodiment, the shopping list component is operably coupled to the correlation component in conjunction with the ECM **200** (as discussed above) for correlating the inventory contained by the shopping cart **10** with the shopping list to determine which products on the list are present in the shopping cart **10**.

[0081] In an embodiment, the shopping list component is operably coupled to the ECM **200**, the locationing component and the video display **75** for displaying an advertisement on the video display **75** for a product on the shopping list when the cart **10** is located proximate to the product. In such an exemplary embodiment, the locationing component determines where the cart is located in the store, the shopping list component determines which products on the customer shopping list are located nearby the cart based on its location, and the ECM **200** displays in the video display **75** at least one advertisement based on the cart **10** being located near to products on the shopping list.

[0082] In use, in an embodiment, the customer shopping list may be displayed in the video display **75** as a less prominent display with advertisements, or as a prominent display when selected by a consumer. By prominence, it is meant that the shopping list may be displayed as a larger, primary display on the video display **75** while advertisements are displayed in smaller, secondary display(s) on the video display **75** adjacent to the shopping list. As will be described further below, and as shown in FIG. **16**, in an embodiment, the screen **77** of the video display **75** may be divided into a plurality of screen segments **308**, such that one of the plurality of stored advertisements **307** may be displayed in various screen segment **308** while a shopping list may be displayed in a screen segment **308**. In an embodiment, one of the plurality of screen segments **308** may be designated for display of consumer specific information, such as the customer shopping list.

[0083] The shopping list component may organize the products on the customer shopping list with locations in the store for each product on the list, and display the customer shopping list according to location. For example, the shopping list component may organize all the products on the customer shopping list according to a department of the store, or according to which aisle the products are located on, in order to facilitate shopping by the consumer.

[0084] In use, in an embodiment, the shopping list component, coupled to the correlation component, correlates the customer shopping list to the inventory of the cart **10**, such that when a RFID tagged product from the customer shopping list is scanned by the basket RFID reader **227** or scanned by the scanner **215**, the product is checked off the customer shopping list. In an embodiment, the consumer may check off a product from the customer shopping list. In the video display, the product may appear as checked off, or may be removed from the shopping list once added to the inventory of the cart.

[0085] In use, in an embodiment, the selection of advertisements displayed to the consumer may be correlated to the customer shopping list by the shopping list component, the correlation component (as discussed herein) and the ECM **200** or other networked component.

[0086] In an embodiment, the shopping list component is further operable, in conjunction with the ECM **200** or other networked component, for a consumer to select a recipe, and generate a customer shopping list based on the ingredients used for preparing the recipe. In such an embodiment, the consumer may select a recipe (either stored in the ECM **200**, or streamed to the cart **10**), and the ingredients necessary for preparing the recipe (also either stored in the ECM **200**, or streamed to the cart **10**) are added by the shopping list component to the customer shopping list.

[0087] In embodiment, the shopping cart system further comprises a voice activated interface **120**. In an embodiment, a voice activated interface **120** comprising a microphone array **121** and a voice activation button **122** may be inset in the handle **22** of the cart **10** and/or in pod **150**. In an embodiment, the microphone array **120** may comprise any number of microphones, including as few as a single microphone, for example integrated with pod **150**. In an embodiment, the microphone array **121** comprises from 2 to 4 embedded microphones inset at intervals along the length of the handle **22**. In an embodiment, a voice activation button **122** may activate the microphone array **120**. In an embodiment, the voice activation button **122** may comprise a button of a five-way navigation device **123** or other navigation device and the microphone(s) may be housed in the pod **150**. By pressing the voice activation button **122**, the consumer **85** may activate a voice command option, enabling the consumer **85** to request the cart **10** to display the location of a particular product or other detailed information from a list of options on the video display **75**. In an embodiment, the microphone array **120** has built-in noise cancellation capabilities.

[0088] In an embodiment, the voice activated interface **120**, microphone array **121** and voice activation button **122** are operably coupled to the ECM **200**. In an embodiment, the ECM **200** may store voice recognition software operable to process a spoken input from the consumer **85** through the microphone array **121** upon activation of the voice command option. The ECM **200** may determine an answer to the spoken question (which may involve reference to a database of product information) and display the answer on the video display

75. The answer may be provided graphically or in written description form, and may include a location (e.g., map) or a menu of options **124**. For example, referring to FIG. **5**, an exemplary response to a spoken input is shown. Upon a request by a consumer **85** being picked up by the microphone array **121**, the video display **75** may identify the product requested (i.e. "ACME cottage cheese"), and display a written description **125** of the location of the product requested, as well as a graphical display **126** of a map of the store indicating the location **127** of the product requested with indication of the current location **128** of the cart. The video display **75** may simultaneously display a list of other options **124**, e.g., a list of available voice commands, as well as one or more advertisements **306** in the plurality of screen segments **308**, wherein the advertisements **306** are selected from a plurality of stored advertisements, as will be described in greater detail herein.

[0089] In an embodiment, the voice recognition software may comprise VoCon 3200™ software, commercially available from SCANSOFT™ or an equivalent software having similar voice recognition capabilities. In an embodiment, the voice activated interface **120**, operably coupled to the ECM **200**, may be re-activated from hibernation along with the ECM **200** when the motion sensor(s) **36** detects that the cart **10** is in motion.

[0090] In embodiment, the shopping cart system further comprises a speaker or other audio output device such as wired or wireless headphones operably coupled to the ECM **200**. In an embodiment, a speaker or array of speakers may be inset in the handle **22** of the cart **10** and/or in pod **150**. In an embodiment, the array of speakers may comprise any number and/or size of speakers, including as few as a single speaker, for example integrated with pod **150**. In an embodiment, the speaker is a one inch audio speaker.

[0091] In an embodiment, the speaker may be operable to play audio portions of advertising corresponding to advertisements displayed on the video display **75**. In an embodiment, the speaker may be operable to make announcements, such as a store announcement, or annunciate a successful scan, by audibly alerting the consumer when a product is scanned by the scanner **215** or when a RFID tagged product is added to the cart **10**. In an embodiment, the speaker enables a customer service representative to speak with a consumer using the cart, resulting in saving the consumer from having to go stand in line at a customer service counter. In an embodiment, the speaker enables a store employee to speak with a consumer using the cart to alert the consumer to the status of their order at an in-store service such as a deli, pharmacy or automotive center.

[0092] In an embodiment, the shopping cart system may further comprise an inventory component for determining an inventory contained by the cart **10**. The inventory component is operable to take an inventory of products placed in the basket **20** or products placed on the base tray **50**. The inventory component may, in an embodiment, be operable to determine the inventory automatically without any action on the part of the consumer beyond placing a product in the cart **10**. Alternatively, the inventory component may, in an embodiment, rely on some action by the consumer in order to determine the inventory of the cart **10**, such as determining the inventory of the cart **10** when the consumer scans a product and places the product in the cart **10**.

[0093] In an embodiment, the inventory component comprises hardware and software operable to carry out the inventorying function. In an embodiment, the hardware and software are co-housed and affixed to the cart **10**, while in another embodiment, the hardware may comprise a unit affixed to the cart **10** (as will be discussed below) and the software may be stored and/or executed from a separate unit, such as the ECM **200**, the POS computer **326** at the Point of Sale **300** or other networked system component, in conjunction with the hardware affixed to the cart. Various computing and communication components may use any suitable wired or wireless communications protocol such as those described herein.

[0094] In use, in an embodiment, the inventory component, in conjunction with the ECM **200** and the correlation component, is operable (as discussed above) to determine the inventory contained by a shopping cart, correlate the inventory to the unique identity of the shopping cart, convey the unique identity of the shopping cart to a Point of Sale **300** (or other retailer system), and convey the inventory of the shopping cart to a Point of Sale **300** (or other retailer system).

[0095] In use, in an embodiment, the inventory component is operably coupled to the ECM **200** and the identification component (discussed in greater detail herein). The identification component associates a unique identity with a shopping cart and the inventory component determines an inventory of the shopping cart. The correlation component (discussed in greater detail herein) correlates the inventory to the unique identity of the shopping cart, and the ECM **200** conveys the inventory of the shopping cart, or the correlation of the inventory to the unique identity to a retailer system, or the identification component conveys the unique identity of the shopping cart, or any combination thereof.

[0096] In use, in an embodiment, the inventory component determines an inventory contained by the cart **10**. The inventory component is operable coupled to the shopping list component, the correlation component (both discussed in greater detail herein), the ECM **200** and the video display **75**. The inventory component determines the inventory contained by a shopping cart, the shopping list component displays on the video display **75** a customer shopping list, the shopping list comprising one or more products for purchase. The correlation component correlates the inventory contained by the shopping cart with the shopping list to determine which products on the list are present in the shopping cart; and convey the inventory and the shopping list to a Point of Sale **300** at the time of purchase. Preferably, conveying the inventory and shopping list to the Point of Sale **300** is done wirelessly by the ECM **200**, for example via any suitable wireless protocol such as those described herein.

[0097] In an exemplary embodiment, the inventory component may comprise at least one basket RFID reader **227** with one or more RFID antennas **228** in conjunction with the ECM **200** and software operating thereon. The number and position of the antennas **228** may be selected as functionally needed, as would be apparent to one of skill in the art. In an embodiment, the basket RFID reader **227** with RFID antennas **228** may be located anywhere on the basket **20** and/or base tray **20** such products having RFID tags (either passive or active RFID tags) may be scanned as they are placed in the basket and/or base tray **20**. Each RFID tag on a product is associated with an industry standard Electronic Product Code ("EPC"), giving the individual product a unique identity. In an embodiment, the basket RFID reader **227** may be integrated with the ECM, for example located within housing **199**. Alternatively, the basket RFID reader **227** or may be located at other positions on the cart, for example located on the underside of the

cart **10**, secured by means of attachment to, for example, the bottom **21** of the basket **20**, or to the base tray **50**. In an embodiment, the basket RFID reader **227** and/or the antennas **228** may be integrated with the video display **75**, for example as part of the base **76** as shown in FIG. **13**. Alternatively, the RFID antennas **228** may be located along the edges **26**, **27** or **29** as shown in FIG. **13**; the side walls **23**, **24**; front side wall **28**; rear side wall **31**, or combinations thereof on basket **20** and/or base tray **50**.

[0098] As products are placed in the basket **20** and/or base tray **50**, and identification information (including, in an embodiment, the product EPC described above) is provided to the ECM **200**, which may be further correlated with additional information such as price, product information, advertising, etc. In an embodiment, information may further be displayed on the video display **75**, for example information pertaining to the product placed in the basket, added to a running total of the products in the cart **10**, etc. The basket RFID reader **227** with RFID antennas **228** may automatically detect when an product has been removed from the cart **10** and placed back on a shelf, and will convey to the ECM **200** that the product has been removed, thus deducting the removed product from the running total displayed on the video display **75**. The network transceiver **204** may additionally convey information about a product placed in or removed from the cart **10** to various network components as will be described in greater detail herein. In an embodiment, the cart **10** is a plastic cart as described herein which lessens or eliminates interference associated with basket RFID reader **227** and RFID antennas **228**. In an embodiment, the cart **10** is a cart comprising metal, plastic, or a combination of plastic and metal that is retrofitted with the media enhancements described here.

[0099] In another exemplary embodiment, the inventory component alternatively or additionally comprises a scanner **215**, for example a bar code scanner. In an embodiment, the scanner **215** is inset in the handle **22** and/or in pod **150** of the cart **10**. In an embodiment, the scanner **215** may be attached to or incorporated with any portion of the basket **20**, such as the side wall **23** or **24**, the front side wall **28** or the rear side wall **31**, in a manner that is accessible to the consumer **85** who is using the cart **10**. Various attachment devices and means for attaching as described herein may be used with the scanner **215**. The scanner **215** enables optional self-scanning of products for purchase, coupons, loyalty cards, and any other object having a bar code or Universal Product Code ("UPC") by the consumer **85**. In an embodiment, the scanner **215** may be activated by the consumer **85** by bringing any product with a barcode symbol within a set proximity of the scanner **215**. In an embodiment, the scanner **215** may be activated by a proximity sensor **216**, which may comprise a portion of the scanner **215** or may be operably coupled to the scanner **215**. Like the scanner **215**, the proximity sensor **216** may likewise be integrated with pod **150**. The scanner **215** may be any suitable scanner such as a laser scanner, CCD scanner, 2D imager, and the like. In an embodiment, the scanner **215** may comprise a linear imager scanner commercially available from HAND HELD PRODUCTS™ or an equivalent or improvement thereof. The scanner **215** may, in an embodiment, scan symbols, such as a UPC or European Article Numbering ("EAN") System codes, in an omni-directional manner.

[0100] In an embodiment, the inventory component may comprise the scanner **215**, in conjunction with the ECM **200** and software operating thereon. In an embodiment, the inventory component is operable to determine the contents of the shopping cart based on what products the consumer **85** has scanned and placed in the shopping cart. In an embodiment, the scanner **215** is operably coupled to the ECM **200**, such that as products are scanned and placed in the cart **10**, the ECM **200** stores in local memory **202** a running total of the products in the cart **10** for purchase. Upon arriving at the checkout counter, known as the Point of Sale **300**, the ECM **200** may communicate information regarding the products that were scanned by the consumer **85** to a POS computer **326** at the Point of Sale **300** or other networked system component, to be discussed in greater detail herein.

[0101] In an embodiment, the scanner **215**, operably coupled to the ECM **200**, may be hibernated or re-activated from hibernation along with the ECM **200** when the motion sensor(s) **36** detects that the cart **10** is in motion or stopped. Specifically, in an embodiment, the scanner **215** may be hibernated, or powered down, for power conservation purposes, when the cart **10** is in motion. When the consumer **85** stops pushing the cart **10** and the cart **10** becomes still while the consumer **85** is selecting products to purchase, the scanner **215** is re-activated such that the consumer **85** may scan products for purchase and place them in the cart **10**. The motion sensor(s) **36** alone or in combination with other locator or positioning systems/data (for example, RFID scans and/or other locator/positioning means) enable this hibernation/re-activation function of the scanner **215**. In alternative embodiments, other cart systems may be activated or deactivated based upon detection of motion or stoppage of the cart in order to conserve power and maximize battery life. For example, the bar code reader may be turned off when the cart is moving, the RFID reader/antennae may be turned off when the cart is stopped, the video display may be turned off when the cart is nested or is immobile for an extended time, or combinations thereof. Again, motion of the cart may be detected for example via a motion sensor such as a reed switch and/or mercury switch alone or in combination with other sensing means such interpreting read data from the RFID tags.

[0102] In an embodiment, the shopping cart system may further comprise a navigation device, for example a five-way navigation device **123**. In alternative embodiments, other navigation devices may be used in addition to or in lieu of the five-way navigation device **123**, for example hard or soft hot buttons, a joystick, touch panel/screen, or combinations thereof. As an additional user interface to the ECM **200** and other features of the cart **10**, in an embodiment, a five-way navigation device **123** may be inset in the handle **22** or in the pod **150**. The five-way navigation device **123** typically allows for input (e.g., navigation of a menu) via up, down, left, right, and enter functions. In an embodiment, the five-way navigation device **123** may be used to activate the microphone array **121** for voice recognition features, or may be used to navigate through a menu of options **124** shown on the video display **75**. In an embodiment, the menu of options **124** may comprise such selections as: 1) a "Help" option, enabling the consumer **85** to request the location of a particular product, 2) an interface with an in-store pharmacy for the consumer **85** to request the status of their prescription or receive notification of prescription availability, 3) an interface with an in-store deli for the consumer **85** to make a deli order or receive notification of order availability, 3) an interface for notification to the consumer **85** of completion of in-store auto servicing, 4) an interface for interaction between the consumer **85** and cus-

tomer service personnel for services such as rain checks, and other functions for in-store services.

[0103] In an embodiment, the shopping cart system may further comprise theft and tamper deterrence design features. The shopping cart, due to the nature of the electronic components used as well as the programming in the computer, may be targeted for theft and tampering. To this end, the various electronics assemblies for the components discussed herein are designed such that if a given cart is disassembled without customized tools and/or in an improper sequence of disassembly, the electronics assemblies are rendered non-functional by virtue of damage incurred by improper disassembly.

[0104] For example, the main logic board of the ECM **200** may be designed having the printed circuit board traces laid out with critical circuit traces residing in close proximity to mounting holes, such as within a few thousands of an inch from the mounting hole. The logic board then would be mounted to the casing and ECM **200** frame using a screw with a customized head, thereby requiring a customized tool for putting in or removing the screw. If the board is subsequently forced from the casing by someone lacking the customized tool, the critical traces would be damaged, and the board would be non-functional to a degree beyond repair without design schematics for the printed circuit board.

[0105] In another example, the video display **75**, which is described in more detail below and that may comprise a liquid crystal display ("LCD"), includes theft deterrence and tampering design features. The video display **75** may include two primary physical elements, namely the LCD display screen and the LCD controller board that interfaces the LCD display screen via a flex circuit. The flex circuit connections to the LCD display screen are fragile and will not withstand flexing or pulling. A thin, insulating metal retaining bar may be added that runs the length of the flex circuit between the LCD display screen and the LCD controller board, and secured in place by a screw or screws with a customized head, thereby requiring a customized tool for removal. If the metal retaining bar is not removed using the appropriate customized tool and in a particular sequence that avoids flexing or pulling the flex circuit connections, the LCD assembly would be rendered non-functional to a degree beyond repair.

[0106] In an embodiment, the cart further comprises a battery **135** operably coupled to the ECM **200**, the video display **75**, voice activated interface **120**, the bar code scanner **215**, and any other component of the cart requiring power. In an embodiment, the battery **135** is a standard Lithium-Ion battery or other similar battery. In an embodiment, the battery **135** may be attached to the underside of the cart **10**, by means of attachment to, for example, the bottom **21** of the basket **20**, or to the base tray **50**. Various attachment devices and means for attaching as described herein may be used with the battery **135**. In an embodiment, the battery **135** may be integrated with the ECM **200**. For example, a battery housing or compartment may be integrally molded from plastic with the ECM **200** housing **199** such that the battery is part of the ECM **200**. In an embodiment, the battery **135** is rechargeable.

[0107] Referring to FIGS. **6**, **7**, and **8**, in an embodiment, the cart **10** may further comprise one or more battery charger contact plates **105**. FIG. **6** is a front view of a cart **10** recharging in a recharge stall **111**. In an embodiment, the battery charger contact plate **105** may be located on the base side member **32** and/or **33**, the side member **16** and/or **17**, or the side wall **23** and/or **24**. For example, as shown in FIGS. **1** and **6**, a single battery charger contact plate **105** may be disposed on each side of cart **10**, thereby providing a pair of battery charger contact plates for each cart. In an embodiment, the battery charger contact plates may be positioned adjacent the rear wheels **38**, for example on the base side members **32**, **33** slightly above the real wheel mount. Given that the rear wheel span is typically about the widest part of the cart, as can be seen in FIG. **6**, positioning of the battery charger contact plates near the rear wheels places them in a low, outboard position on the cart that is useful in engaging a charge rail system **106** for recharging the battery. In an embodiment, the battery charger contact plate **105** may be spring-loaded to aid in contacting the contact plate with a charge rail.

[0108] FIG. **8**A is a side view of charge rail system **106** for recharging the battery **135** of one or more carts **10**. The charge rail system **106** comprises a cart corral **110** having a plurality of recharge stalls or lanes **111**, with each recharge lane having charge rails **107** and **108**. In an embodiment, the recharge stalls **111** comprise a plurality of charge rail segments **109**. In a store, the plurality of charge rail segments **109** comprised of charge rails **107** and **108** may be arranged in a cart corral **110**. The plurality of charge rail segments **109** may be arranged in one or more rows of recharge stalls **111**.

[0109] FIG. **8**B is a side view of two charge rail segments **109** forming a single recharge stall **111**. Each charge rail segment **109** comprises a floor section **113**, a charge rail wall **114**, and optionally a stall wall **115**, which may be transparent as shown in the Figures or may be non-transparent. Charge rails **107**, **108** are disposed on either side of charge rail wall **114**, as is shown more clearly in FIG. **6**. In an embodiment, a plurality of charge rail segments **109** may attach together in an end-to-end fashion (as indicated by reference arrows **116**) or in a side-to-side fashion (as indicated by reference arrows **117**) to form the recharge stalls **111** and cart corral **110**. As shown in FIG. **8**B, the side edge **118** of the floor section **113** may be configured to mate or interlock with the side edge **119** of charge rail wall **114** of an adjacent charge rail segment **109**. Likewise, front and rear edges **129**, **130** of the floor section **113** may configured to mate or interlock with corresponding front and rear edges from adjacent charge rail segments **109**.

[0110] In an embodiment, the charge rail system **106** further comprises a power supply **112** which may be mounted on a wall or other permanent fixture for providing power to the carts **10**. The power supply **112** may be plugged in and operably connected to the charge rails **107** and **108**. Likewise, the plurality of charge rail segments further comprise connections such that power is supplied to the entire cart corral grid via the connection of adjacent charge rail segments **109**.

[0111] In operation, a cart **10** may be fed into a cart corral **110** by a consumer **85** or store employee placing it in a recharge stall **111**. In an embodiment, the recharge stall **111** may be sized such that the charge rail segments **109** are spaced apart adequately (e.g., about equal to the rear wheel span of the cart **10**) such that the cart **10** fits between the charge rail segments **109** securely enough for the battery charger contact plate **105** to come into contact with the charge rails **107** and **108**, as shown in FIG. **7**. Contact between a battery charger contact plates and charge rails **107** and **108** forms a flow path for electrical current between power source **112** and the battery **135** such that the battery is charged. Rechargeable batteries are well known in the art, as are methods of charging such rechargeable batteries from a power source. In an embodiment, a first contact plate **105** and a first charge rail (e.g., **107** or **108**) form a positive terminal of the electrical connection and a second contact plate **105** and a

second charge rail (e.g., **107** or **108**) form a negative terminal of the electrical connection. While dual contact plates and charge rails are shown, the charge rail system may be configured to operate using a single contact plate **105** on the cart and/or a single charge rail **107** or **108**.

[0112] In an embodiment, each charge rail **107** or **108** may be spring loaded, each battery charger contact plate **105** may be spring loaded, or both may be spring loaded. In an embodiment shown in FIG. **7**, the charge rail **107** further comprises a spring **140** biasing a rail plate **141** outward for contact with the battery charger contact plate **105** located on the cart. The rail plate **141** may be surrounded by rail guard **142**. The rail guard **142** may be configured to allow contact between the contract plate **105** and the rail plate **141** while preventing unwanted contact with rail plate **141** which might lead to electrical shock. In an embodiment shown in FIG. **7**, the rail guard **142** has a concave shape with the rail plate **141** extending outward a portion of depth of the concave cavity, but not beyond the outer edges **144** of the rail guard **142**. The contact plate **105** may have a corresponding convex shape, thereby allowing contact between the contact plate **105** and the rail plate **141**. When a cart **10** is fed into a recharge stall **111**, the cooperative shapes and spring loaded nature of the battery charger contact plate **105** and/or the charge rail **107** or **108** cause them to be in contact with each other, creating an electrical conductor between the battery **135** and the power source **112**. While FIG. **7** is shown with a single charge rail **108** (for example, for use as an end rail assembly for attachment on end **118** of FIG. **8**B to form a complete stall **111**), it should be understood that typically two charge rails **107** and **108** will be used in a back-to-back or mirror configuration, as is shown in FIG. **6**. The components of the two charge rails **107** and **108** will be similar to the components shown in FIG. **7** for charge rail **108**.

[0113] In an embodiment, the plurality of charge rail segments **109** are further configured to form a cart corral **110** such that a plurality of carts may be nested and stored therein, and each of the plurality of carts may be charged at the same time by the contact between each battery charge contact plate **105** of each cart with the charge rails **107** and **108**. For example, some or all of the carts in a store may be placed in the recharge stalls **111** of the cart corral **110** during off-hours or hours when the store is closed in order for the battery **135** of each cart **10** to be recharged for the next day or busy period of time.

[0114] In alternative embodiments, the contact plates **105** may be positioned at other locations on the cart **10** and the charge rail system **106** may be modified accordingly to provide contact with such plates as described previously. In an embodiment, contact plates **230**, **231** are positioned adjacent to and/or integral with ECM **200** as shown in FIGS. **6** and **12**, which may be advantageous in simplifying and shortening the flow path between the charge plates and the battery **135**, especially when the battery **135** in integrated in ECM **200**. Contact plates **230**, **231** would typically be used in lieu of contact plates **105**, as shown in FIG. **12**, provided however that dual sets of contact plates **105** and **230**, **231** could be used if desired as shown in FIG. **6**. The location of charge rails **107** and **108** would be modified, for example raised and/or extended, to engage with contact plates **230**, **231** positioned adjacent to and/or integral with ECM **200**. Likewise, the contact plates **230**, **231** could be mounted in a position extending outward from the ECM **200** as needed to facilitate engagement with the charge rails **107** and **108**. For example, contact plates **230**, **231** may be mounted on protruding or bulbous ECM **200** side plates **235**, as shown in FIG. **12**.

[0115] An alternative charge rail configuration is shown in FIGS. **8**C-E. The recharge stall embodiment shown in FIGS. **8**C-E may likewise be modular in nature as described herein. FIG. **8**C is a partial front view of cart **10** recharging in a recharge stall **111**. A charging module **190** is mounted to the wheel yoke **191** of rear wheels **138**, for example via one or more bolts or other connectors. In an alternative embodiment, the charging module **190** may be mounted to the frame **30** or the underside of base tray **50**. Preferably, the charging module **190** is mounted inboard of the rear wheels **38** and outboard of the front wheels **37**, and more preferably on the interior side of rear wheel yoke **191**. A battery charger contact plate **105** extends downward from the charging module **190**. The battery charger contact plate **105** may be spring loaded to aid in contacting the contact plate with a charge rail.

[0116] Charge rails **107** and **108** extend upward from the floor section **113** of recharge stall **111**. As shown in FIG. **8**C, when a cart **10** is positioned in a recharge stall **111**, the charge rails **107**, **108** are positioned inboard of the rear wheels **38** and outboard of the front wheels **37** and serve to guide the cart into the proper position for recharging. While positioned in recharge stall **111**, the battery charger contact plates **111** enter slots **192** on charge rails **107**, **108** and make contact with rail plate **141** such that electricity may pass from the recharge stall **111** and charge battery **135**. Rail plate **141** may be spring loaded in addition to or in lieu of spring-loading the battery charger contact plate **105** to aid in contact there between. The slots **192** in charge rails **107**, **108** may be fully or partially covered by a flexible material such as plastic or a nylon brush to prevent debris from entering the slots **192**. Such flexible material may be pushed aside by the battery charge plate **105** as it enters the slots **192**.

[0117] As shown in FIGS. **8**D and **8**E, the charging module **190** may further comprise a contact plate cover **195**. As shown in FIG. **8**D, when the cart is not in a charge stall **111**, the contact plate cover **195** extends downward to cover and protect the battery charge plate **105**. As shown in FIGS. **8**D and **8**E, the contact plate cover **195** may comprise a generally U-shaped member having a gap or protective arm extending there from for receipt of the battery charge plate **105** in a closed position. The contact plate cover **195** may be biased in a closed position, for example with a spring. When a cart is positioned inside a recharge stall **111**, the contact plate cover **195** is pushed upward via contact with an upper portion **196** of charge rails **107**, **108**, thereby placing the contact plate cover **195** in an open position as is shown in FIG. **8**E.

[0118] In still further embodiments, the charge rail system **106** is operable to accept a cart **10** in both directions, and fully charge the cart **10**. That is, the charge rail system **106** allows for DC charging voltages to be accepted in either direction (positive to ground or ground to positive). A Power Management Unit (referred to herein as the "PMU") of the charge rail system **106** senses the presence of a cart **10** on the charge rails **107** and **108**. Upon DC power contact, the PMU determines battery **135** capacity from previous battery readings prior to charging. The PMU may then initiate LED status indicators on the charging device (here, a cart **10**) to indicate a level of charge and when charging has commenced.

[0119] In an embodiment, the PMU comprises a PIC processor in the charging unit and firmware. The PIC processor of the PMU communicates with the processor in the ECM **220** on the cart **10**. The PMU monitors the communication control

between the host cart ECM **200** and the PMU communication interface. If loss of communication occurs, default protocols may be executed. For example, the charge rails of the host system (i.e., cart) are shut down and reset or power to the system (e.g., cart) may be otherwise cycled, thereby preventing lockup conditions with the host ECM **200** and other subassemblies.

[0120] The PMU calculates the appropriate charging algorithm to charge the battery **135**. In various embodiments, the calculation of the appropriate charging algorithm may be based upon voltage and/or temperature calculations. In various embodiments, the PMU uses measurement averaging routines to determine the charge routines, such as trickle charge, full charge, or over/low voltage fault conditions. Averaging helps to mitigate the effects of contact chatter when the device being charged (i.e., the cart **10**) traverses the charge rails **107** and **108** (i.e., impedance fluctuations and the like). In an embodiment, the PMU imposes a delay (e.g., 5 or 10 seconds) from first contact to allow time for the cart to become fully nested and stop moving prior to commencing charging.

[0121] Additionally, the PMU senses error conditions for voltage levels or if the PMU loses communication with the host (i.e. the cart ECM **200**), then the PMU initiates a self-reset to recover and reestablish communication with the cart **10**. Error conditions may include for example too low a voltage, or a very high voltage. Either case could indicate a bad cell in the battery **135**, which would indicate that the battery **135** should not be charged with full charge. Error conditions are set in the PMU.

[0122] To prevent deep battery discharge of the cart **10**, the PMU in still further embodiments, senses voltage level of the cart **10** and calculates remaining charge capacity. If the capacity approaches a predetermined threshold (such as 20% of remaining capacity, or in an illustrative system 11 volts), a warning message is issued via the communications port for system action. If the low voltage condition persists after a predetermined period of time, the PMU may automatically shut down the entire system, thereby preserving the PMU power needed for subsequent operation (i.e. reboot) and allowing the device (i.e., cart **10**) to be charged without replacing the battery **135**.

[0123] In additional power management features, the PMU may be operable to shut down certain functions of the device to conserve system power during charging. For example, while the cart **10** is within the corral **110**, the LCD is not needed, the RFID is not needed, and the like, while the wireless connection is still needed. By shutting off cart features that consume significant amounts of power while charging, faster charging is enabled.

[0124] As shown in the Figures, a video display **75** is attached or mounted (referred to collectively hereinafter as attached) to the basket **20** of the shopping cart **10**. Attachment of the video display **75** to the basket **20** is in contrast to attachment of the video display **75** to the handle **22**. In other words, the video display **75** is not attached or mounted to the handle **22**. As shown in FIG. **10**, the video display **75** may comprise a base **76** and a screen **77** having a viewable area **78**. In an embodiment, the video display **75** is attached to the basket **20** such that the viewable area **78** is above the interior **54** of the basket as previously defined. Unless otherwise specified, attaching the video display **75** such that the viewable area is above the interior **54** of the cart includes, in various alternative embodiments, having the viewable area **78** entirely above the interior **54**; having the viewable area **78** substantially above the interior **54**; or having greater than 50, 60, 70, 75, 80, 85, 90, 95, or 99 percent of the viewable area **78** above the interior **54**.

[0125] In another embodiment, the video display **75** is attached to the basket **20** such that the viewable area **78** is in a field of vision **84** of a consumer **85** pushing the cart **10** via the handle **22**. Referring to FIG. **9**, field of vision **84** refers to the area having a lower boundary **80** defined by an unobstructed line of sight from the eyes of consumer **85** to the an upper edge of the basket (e.g., front edge **29**) and an upper boundary **81** defined by a line of sight from the eyes of the consumer **85** to an upper periphery of the consumer's vision. Unless otherwise specified, attaching the video display such that the viewable area is in consumer's field of vision **84** includes, in various alternative embodiments, having the viewable area **78** entirely in the field of vision **84**; having the viewable area **78** substantially in the field of vision **84**; or having greater than 50, 60, 70, 75, 80, 85, 90, 95, or 99 percent of the viewable area **78** in the field of vision **84**. The field of vision **84** may vary based upon the height of the consumer **85**, and in an embodiment the shopping cart **10** is configured and the video display **75** is attached to the basket **20** such that the viewable area **78** is in a field of vision **84** of a consumer **85** having a height of equal to or greater than 5 feet and 0 inches. The field of vision **84** may also vary based upon the position of the child seat **60** or the presence of a child seated therein, and in an embodiment the shopping cart **10** is configured and the video display **75** is attached to the basket **20** such that the viewable area **78** is in a field of vision **84** of a consumer **85** having a height of equal to or greater than 5 feet and 0 inches when the child seat **60** is empty and folded in a closed position. The field of vision **84** may also vary based upon the position of products in the basket, and in an embodiment the shopping cart **10** is configured and the video display **75** is attached to the basket **20** such that the viewable area **78** is in a field of vision **84** of a consumer **85** having placed products in the basket, wherein said products do not extend outside or above the interior **54** of the basket as previously defined.

[0126] In another embodiment, the video display **75** is attached to an upper edge **26** or **27**, or front edge **29** of the basket **20**. For example, the base **76** of the video display **75** may be attached to an upper edge **26** or **27**, or front edge **29** of the basket **20**. Various attachment devices and means for attaching as described herein may be used with the video display. In an embodiment, the base **76** of the video display may be attached to an upper edge **26** or **27**, or front edge **29** of the basket **20** such that the viewable area **78** is above the interior **54** of the basket as discussed previously. In an embodiment, the base **76** of the video display may be attached to an upper edge **26** or **27**, or front edge **29** of the basket **20** such that the viewable area **78** is in a field of vision **84** of a consumer **85** pushing the cart **10** via the handle **22** as discussed previously.

[0127] In another embodiment, the base **76** of the video display may be attached to walls **23** or **24**, front side wall **28**, and rear side wall **31** on the interior or the exterior of the basket **20**. In an embodiment, the base **76** of the video display may be attached to a wall **23** or **24**, front side wall **28**, and rear side wall **31** on the interior or the exterior of the basket **20** such that the viewable area **78** is above the interior **54** of the basket as discussed previously. In an embodiment, the base **76** of the video display may be attached to a wall **23** or **24**, front side wall **28**, and rear side wall **31** on the interior or the

exterior of the basket **20** such that the viewable area **78** is in a field of vision **84** of a consumer **85** pushing the cart **10** via the handle **22** as discussed previously.

[0128] In another embodiment, the video display **75** is attached to the nose **45** of the cart **10**. The nose of the cart **45** is a well known area to those skilled in the art. In various embodiments, nose of the cart **45** refers to the frontward most ⅓ of the basket **20**, alternatively the frontward most ¼ of the basket, alternatively the frontward most ⅕ of the basket, alternatively the frontward most 1/10 of the basket, alternatively the front wall **28**, alternatively front edge **29**. In an embodiment, the nose of the cart is shown in FIG. **10** or FIG. **11**. In various embodiments, the video display may be attached to the nose of the cart via a wall or an upper edge as described previously and the viewable area **78** may be above the interior **54** of the basket and/or in a field of vision **84** of a consumer **85** as described previously. In an embodiment, the base **77** of the video display **75** is shaped to conform to or about match the contour or shape of the nose **45** of the cart **10**, as is shown in FIGS. **10** and **11**.

[0129] The video display **75** may be any suitable electronic display for receiving and displaying visual images to the consumer **85**. The visual images may be transmitted to the video display **75** by any suitable means known in the art such as via a wireless transmission. In an embodiment, the video display **75** is of a type commonly referred to as a flat screen display, for example an LCD. The video display **75** may be powered by a rechargeable battery **135** attached to the cart **10** and operatively coupled to the video display **75**.

[0130] In another embodiment, the video display **75** is attached to the basket **20** and is foldable or retractable for storage. For example, the video display **75** may fold or retract into the interior **54** of the basket **20** for storage when the cart **10** is not in use. In an embodiment, the video display **75** is configured to fold or retract such that a plurality of carts **10** may be nested for storage as shown in FIG. **12** without damaging the video display **75**. For clarity, the outer cart in FIG. **12** is shown without rear side wall **31**, with the understanding that rear side wall **31** would typically be present in carts used by a consumer **85**.

[0131] In an embodiment, the base **76** of video display **75** forms a housing in which screen **77** may retract. Such housing receives screen **77** in a retracted position and protects the screen **77** from damage. The screen **77** may be retracted into such a base housing (comprising a front base housing **96** and a rear base housing **97**) by known means such as rails, slides, rollers, telescoping members, and the like, which may be further biased, for example by springs, as needed. The screen **77** may be retracted to a closed position by pushing on the top **71** of screen **77** where the screen **77** is biased up, or by releasing a latch or lock where the screen **77** is biased in a retracted position. In an embodiment, the screen **77** is folded down by contact with another cart when nested therewith as shown in FIG. **12** and is biased up such that the screen flips up upon unnesting of the carts.

[0132] In another embodiment as shown in FIG. **13**, the video display **75** comprises a hinge **79** between the base **76** and the screen **77**, which allows the screen **77** to fold downward toward the interior **54** of the basket **20** into a folded position as shown in FIGS. **10** and **11**. In an embodiment, the screen **77** folds at about a 90 degree angle with respect to the base **76** (or alternatively folds such that the screen **77** is about within the plane defining the upper edges of the cart), which clears the nose **45** and exterior of the cart for nesting with a second cart while also keeping the interior of the cart **10** clear such that the rear side wall **31** may swing upward into the interior **54** of the basket **20** to receive the front side wall **28** of a third cart.

[0133] With reference to FIG. **14**, the screen **77** of video display **75** may further comprise a shock absorber **94** protecting an electronic display **95** such as an LCD screen, each of which are disposed between front and rear screen housings **92**, **93**. The base **76** of video display **75** may further comprise a hinge **79** disposed between front and rear base housings **96**, **97**. The hinge **79** may further comprise a gear assembly **91** comprising gears, springs, dampeners, or combinations thereof for biasing the hinge in a folded or unfolded position. The gear assembly **91** may be used to control the force required to fold the screen **77** into a folded position, as shown in FIGS. **10** and **11**, in response to a force applied to a rear screen housing **93** of the video display **75**. Likewise, the gears assembly **91** may be used to control the speed with which the screen **77** unfolds into an unfolded position such as shown in FIGS. **1-3**. In an embodiment, the screen **77** unfolds in a slow, controlled manner to avoid damaging the screen **77**. In an embodiment, the unfolding of the screen is dampened via dampeners in the hinge **79** and/or gear assembly **91**.

[0134] In another embodiment, the video display **75** is attached to the basket **20** and may be swiveled such that the viewable area **78** may be viewed from various locations relative to the cart **10**. A swivel may be positioned between the base **76** and the screen **77** such that the screen **77** may rotate or swivel about the base. The swivel may be integrated with the hinge **79**, or alternatively may be a separate component, for example positioned between the hinge **79** and the screen **77**. In embodiments where the video display is mounted on a side edge **26**, **27**, the video display **75** may further comprise a swivel such that the viewable area **78** may rotated to face rearward toward the consumer **85** while the consumer **85** is pushing the cart using handle **22**. Alternatively, in embodiments where the video display **75** is mounted on the nose **45** of the cart, the video display **75** may swivel such that the consumer **85** may see the viewable area **78** from locations other than at the rear of the cart. For example, a consumer **85** may wish to swivel a nose-mounted screen **77** sideways such that the viewable area **78** is readily viewable while standing at the side or front of the cart **10**. In an embodiment, the video display **75** may swivel about 180 degrees such that the viewable area **78** faces forward rather than facing rearward toward a consumer **85** pushing the cart **10** via handle **22**. From a forward facing position, the video display **75** may further fold into a folded position such that the screen **77** is on the exterior of the basket **20** in a folded position, wherein the viewable area **78** is protected via mating with the base **76**.

[0135] In another embodiment, the video display **75** is attached to the basket **20** and may be heated such that the screen **77** is readily operable in cold environments. For example, the video display of FIG. **9** may further comprise a heating element, which may be positioned internal or external to the screen housing **92**, **93**. Alternatively, the base housing **96** and **97**, as described previously, may be heated such that the screen **77** is kept warm while in a retracted position. Any suitable heating element that is compatible with the screen components and operation thereof may be used, for example a resistive electrical heating element. The heating element may be powered during storage and/or charging of other components of the cart **10**, for example during charging of the battery **135** for video display **75**.

[0136] Referring to FIG. **15**, in an embodiment, the cart **10** further comprises a read component comprising at least one aisle Radio Frequency Identification ("RFID") reader **225** with RFID antennas **226**, in conjunction with the ECM **200** and software operating thereon. The read component performs a proximity scan of the cart **10** that reads the area surrounding the cart **10**. The number and position of the antennas **226** may be selected as functionally needed, as would be apparent to one of skill in the art. The aisle RFID reader **225** and the antennas **226** may be an integrated component or may be separate components. In an embodiment, the aisle RFID reader **225** may be integrated with the ECM **200**, for example located within housing **199**. Alternatively, the aisle RFID reader **225** or may be located at other positions on the cart, for example integrated into the video display **75** or base/housing **76** or alternatively located on the underside of the cart **10**, secured by means of attachment to, for example, the bottom **21** of the basket **20**, or to the base tray **50**. In an embodiment, the RFID antennas **226** are located on either side of the housing **199** of the ECM **200**. Alternatively, the RFID antennas **226** may located at other positions on the cart, for example on side walls **23**, **24**; on edges **26**, **27**; on base side members **32**, **33**; on the sides of the video display **75**; or any other position suitable for carrying out their intended function.

[0137] In an embodiment, the aisle RFID reader **225** and/or RFID antennas **226** may be integrated with the video display, for example one or both located on the side edges of the video display **75**. In such a placement, the aisle RFID reader **225** and/or RFID antennas **226** are in a location to maximize the effectiveness of the reader distribution pattern and encompass RFID tags located at various heights and locations along the shelves, when the video display is not retracted and the cart **10** is not nested. Placement on the video display is advantageous as the RFID reader/antenna are positioned at approximately the middle of the shelf height, thereby allowing an about equidistant scan pattern above and below the position of the RFID reader/antenna to cover the complete height of the shelf.

[0138] In an embodiment, RFID antennas **226** are placed on the side edges of the video display **75**. In some embodiments, patch antennas may be used for the RFID antennas **226**. In alternative embodiments, the RFID antennas **226** comprise bowtie and/or slot antennas, which narrow the field of broadcast for the antenna and have a more focused radiative pattern. As illustrated for a bowtie-shaped aperture **211** of antenna **212** in FIG. **20**A and for a slot-shaped aperture **213** of antenna **212** in FIG. **20**B having an approximate radiative patterns **207** and **208** of FIGS. **20**C and **20**D, respectively. In an embodiment, a bowtie or slot antenna having a beam approximately eighteen (18) inches wide and approximately six (6) to eight (8) feet high is used for the RFID antennas **226**, and are placed in vertical alignment parallel with the LCD video display (and/or at other suitable mounting locations on the cart) such that the radiative pattern of the antennas provides a narrow slice of broadcast in the direction perpendicular to each side of the cart for reading RFID tags located on the shelves or on items on the shelves on each side of an aisle. In an alternative embodiment, a bowtie or slot antenna having a radiative pattern of plus/minus 45 degrees (90 degrees total) in a vertical plane covering shelf height and plus/minus 15 to 22.5 degrees (30 to 45 degrees total) in a horizontal plane covering shelf width is positioned on each side of the cart, for example mounted on or integrated with the video display **75**. The use of slot and/or bowtie antennas provides a more focused field of view for the RFID reader to acquire specific tags, and thus may assist in eliminating unwanted interference, echos, reflections, and the like. Thus, the more focused field of view may also aid in more accurately determining position/location of the cart, and in particular in combination with other positioning/locating techniques described herein.

[0139] Various means for attaching and attachment devices may be used as described herein. In an embodiment, the aisle RFID reader **225** with RFID antennas **226** may comprise a standard or customized RFID configuration commercially available from for example ThingMagic, Alien Technology™ or an improvement or equivalent thereof The aisle RFID reader **225** and RFID antennas function to read a plurality of active or passive RFID tags positioned throughout a retail establishment (e.g., along shelves), as will be discussed in more detail. In an embodiment, the cart **10** is a plastic cart as described herein which lessens or eliminates interference associated with the aisle RFID reader **225** and RFID antennas **226**. In an embodiment, the cart **10** is a traditional cart comprising metal, plastic, or a combination of metal and plastic, retrofitted with the aisle RFID reader **225** and RFID antennas **226** and other media enhancements.

[0140] In or about a store, a consumer **85** may select a cart **10** from the cart corral **110** upon entering the store. The motion sensor(s) **36** detect that the cart **10** is moving when the consumer **85** begins to push the cart **10**, and will activate the ECM **200**, video display **75**, and the aisle RFID reader **225**. As previously noted, various components of the cart **10** may be hibernated or re-activated based on motion by the cart to preserve power. In an embodiment, the video display **75** may initially show the consumer **85** a welcome display that includes information about the store, explains the media enhancements to the cart **10**, and/or announces in-store promotions. As shown in FIG. **15**, as the consumer **85** pushes the cart **10** through the store, such as between two shelves **301** and **302**, a plurality of RFID tags **303** and **304** (which may be active or passive RFID tags) located on or near the shelves **301** and **302** respectively, will communicate with the aisle reader **225** via the antennas **226**.

[0141] In an embodiment, the RFID tags **303** and **304** may be distributed and affixed to objects throughout the store premises. For example, RFID tags **303** and **304** may be attached (i) at a shelf or fixture level, which refers to placement of tags at about regularly spaced intervals along a shelf or other product display areas such as kiosks, pillars, freezers, refrigeration units, walls, bins, and counters; (ii) at a SKU level, which refers to placement and/or incorporation of the tags with or near the standard SKU label, with a given product typically having one corresponding SKU tag positioned on the shelf adjacent the product; (iii) at a product level, which refers to having a tag on each individual product or package of products, or (iv) combinations thereof. The aisle reader **225**, operably connected to the ECM **200**, will convey a signal comprising informational data to the ECM **200**, causing the video display **75** to present location-based content to the screen **77**. The RFID enablement of the cart permits advertisers and retail stores to interact with the consumer **85** as she navigates the store.

[0142] The location-based content is determined as follows. In an embodiment, the aisle reader **225** with antennas **226** reads any RFID tag **303** or **304** that comes within a cone-shaped pattern defining an electromagnetic zone **305** (of the aisle RFID reader **225**) on either side of the cart **10**. As

noted previously, the shape of the electromagnetic zone or radiative pattern may be adjusted based upon the type and positioning of the RFID components on the cart, for example use of bowtie and/or slot antennas. The shape of the electromagnetic zone **305** read by the aisle RFID reader **225** may be another shape, other than a cone, according to the particular aisle RFID reader **225** employed, and the range (i.e. proximity within which tags may be read by the reader) is likewise determined by the particular aisle RFID reader **225** and antenna **226** array employed.

[0143] When an RFID tag **303** or **304** passes through the electromagnetic zone **305**, the tag is activated and communicates with the aisle RFID reader **225** according to known RFID techniques. A locationing component (which in an embodiment comprises the aisle RFID reader **225**, in conjunction with the ECM **200** and software operating thereon) determines the location of the cart **10** in the store by processing signals from any number of RFID tags **303** or **304** that are within range of the aisle RFID reader **225**. The location of the cart **10** relative to specific RFID tags **303** or **304** is determined according to well known RFID positioning techniques. In an embodiment, location may be determined based on the strength of the signals coming from the RFID tags **303** and **304** (i.e. highest number of scans read by the aisle RFID reader **225** indicates which tag or tags **303** and **304** are closest).

[0144] In an embodiment, the process of locating the cart **10** begins by creating an electronic representation of the store configuration including fixtures, aisles, and other relevant data using the location of a number of reference or anchor RFID tags (e.g., shelf or fixture level tags) placed around the store in known locations. This electronic representation provides a base map of the store. The base store map may be built using the cart **10** by placing the anchor RFID tags in the known locations around the store, taking the cart **10** through various routes throughout the store to read each of the anchor RFID tags, and correlating the read data with the known data. The base store map is materialized as either database entries or an xml document generated from the correlated data. The base store map provides reference data for determining the location of other goods or items in the store. As fixtures, items, and/or anchor tags are moved within the store, the base store map may be updated by taking the cart **10** through the store again to obtain fresh data and correlate it with the updated known anchor RFID locations.

[0145] Against the backdrop of the anchor RFID tags, a series of virtual locations are created and positioned within the defined framework of the store, i.e., the base store map. Each location, such as for example a shelf, freezer fixture, aisle, or produce bin, can then be defined as associated with one or more anchor RFID tags, which may be active or passive tags, as previously noted. Such known locations may be used to determine the location of the cart, for example using the RFID locator service software routine described below. Furthermore, the known locations may be correlated to specific products, for example via use of additional SKU level and/or product level RFID tags. For example, a given product such milk may be correlated to a specific refrigerator having a known location within the base store map. Via such correlation, the location of specific products can be provided relative to the known location of the cart within the store, and the consumer may be provided directions to such products.

[0146] In various embodiments, subcategories may be used for product positioning instead of positioning every single product with a location in the store. Using subcategories simplifies store deployment. Each product is tied to a subcategory, and each subcategory is in turn associated with a location in the store. Thus, milk may be assigned to dairy or milk may be a subcategory including all brands and varieties of milk (e.g., whole, skim, etc.).

[0147] As discussed herein, the aisle RFID reader **225** is located upon the cart with the RFID antennae **226** oriented facing outward from the cart. Given that the cart and associated RFID reader is mobile within the store whereas the RFID tags are typically stationary within the store, various RFID data along with other positioning information (for example, motion sensor data) may be gathered and analyzed using software algorithms, for example operating on ECM **200** or a remote location such as a store server and provided to the cart. The antennae configuration (position, orientation, type) is made known in inputs to the software processes involved in locating the cart in the store, as well as performing useful tasks such as shelf management for tasks including inventory, price changes, and the like. The RFID are evaluated using the known antenna orientation and configuration in order to determine cart orientation.

[0148] For instance, at a recurring interval, the aisle RFID reader **225** may perform an inventory by recording RFID information for products located on the shelves and correlating the recorded information with the store's system. The results of the inventory may then be analyzed and used in decisions regarding orders for additional products and product placement in the store.

[0149] In locating the cart (which may then be used for determining the placement of advertisements in the video display **75**, store purposes, or data mining for external or internal uses), for each antenna, the RFID tags "in view," or located within the radiative pattern of the antenna **226**, are evaluated. The evaluation process uses several pieces of information to determine the location of the cart within the store, and specifically within the electronic base store map defined above.

[0150] The RFID locater service software routine that encompasses these functions performs location inventory and store mapping that is used to determine what any given cart is doing within the store, and provides an added level of accuracy in addition to the RFID location determination. The intelligence involved in the RFID locater service intelligently links what is read by the aisle RFID reader **225** with information known about the store based on the base store map and the known locations of anchor RFID tags. In an embodiment, the anchor RFID tags may be located at regular intervals, such as every 2 feet along the shelves, or on each side of fixtures such as produce bins, and the like. The RFID locater service additionally incorporates knowledge about RFID dead zones, such as foyers or the locations surrounding large metal fixtures that may interfere with RFID signals, so that locating the cart **10** is smooth and continuous regardless of where the cart is located in the store. For example, metal refrigerators tend to generate a lot of reflections such that RFID readings in the vicinity of a refrigerator are full of noise. The RFID locater service can account for known reflections in such an area, and adjust what the RFID reader **225** reads in such an area.

[0151] In an embodiment, location is determined via a scan to determine what products and items are in proximity to the cart (i.e., an inventory of tags read by the scanner) and correlating same to the cart's determined position to check the accuracy of the determined position and correct same as

needed. The ECM **200** issues a read command to the aisle RFID reader **225**. The locator software process then evaluates the read RFID tags (e.g., SKU and/or product level tags) to eliminate tags generating spurious reads, i.e., those included in the read that are not RFID tags associated with a location as established via the anchor RFID tags (e.g., shelf level tags). The remaining tags are then converted to locations indicated in the map. All of the locations (e.g., all RFID tag data) may then be evaluated to determine the cart location and orientation relative to the locations defined in the base store map. Such RFID data may be further correlated with other locationing means and data such as motion sensors such as the reed switch described herein. In this process, the software assumes and takes into account the anticipated read zone of the two antennae. If evaluated individually, each tag indicates the orientation of the cart. The overall orientation is determined by evaluating the orientation differential of each tag location from the orientation indicated by the complete location inventory. The "outlying" locations providing an orientation that is substantially out of correlation in comparison with the others within the inventory are removed, given that they represent spurious locations derived from spurious tag reads.

[0152] In some cases, RFID reads during inventory will be non-deterministic. Inconsistencies in the RF environmental (e.g., reflections, nulls, false reads, signal collisions, etc.), physical obstructions, technology failure and other factors may cause unpredictable inventory responses. Spurious reads are defined as those that are inconsistent with the results expected for the cart in a given position and orientation. For example, one spurious read would occur for a tag that shows up in the inventory that is outside the maximum expected read range of the aisle RFID reader **225**. Furthermore, transient reads are defined as those that are consistent with the expected results for a given cart position and orientation, but that do not consistently appear in a set of inventory reports collected over an arbitrary period of time.

[0153] With the inventory of locations in the system, locations may then be evaluated to determine cart position as a relative x,y coordinate within store map. The system employs a location buffer to smooth out errors introduced by transient tag reads. The remaining locations are evaluated, and an average x,y position is calculated. The nearest location (among the inventory locations) to the calculated location is determined and the cart position is adjusted according to which location is nearest. This adjusted position is then compared to the map and further adjusted as necessary to position the cart accurately within the map. Such positions and data may be further compared to known/mapped routes or paths within the store to further assist in determining the location of the cart. For example, if may be know that a consumer will likely travel a certain path based upon the position within the store and same may be used to help track and position the cart as it traverses the anticipated path.

[0154] A number of rules may be applied in the evaluation of the inventory location to improve the accuracy of locating the cart, and therefore also the efficacy of the cart **10** as a shelf management tool. For example, a temporal rule may be applied such that recent tags reads are prioritized above older reads into determining cart position. Additionally, recent location reports may be used in determining if a particular tag represents a spurious read.

[0155] Similarly, a volume rule may be applied, such that a large volume of tag reads occurring during a given time frame are prioritized above smaller volumes of tag reads for determining cart position. For example, a RFID tag "seen" by the aisle RFID reader **225** twenty times during the last second is prioritized above a RFID tag "seen" only one time during the last second. Likewise, a proximity rule may be applied, wherein RFID tags in the inventory that are proximate to one another are prioritized above RFID tags in the inventory that are not proximate. In such a case, proximity is based upon the base store map and business rules.

[0156] In various embodiments, the accuracy of the determination of cart location is improved by the addition of the magnetic reed switch, discussed previously as an embodiment for the motion sensor(s) **36**. The rotational speed of each wheel may be determined based on the "heartbeat" signal generated each time the magnet opens or closes the magnetic reed switch, preferably without physical contact thereof, when the wheel turns. By placing a magnet and reed switch assembly on two wheels, such as, for example, on both back wheels, the ECM **200** may determine when the cart **10** is turning as an added factor in accurately determining the location and orientation of the cart **10**. Specifically, when the cart **10** is turning, such as around a corner or to enter a next aisle in the store, the wheel to the inside of the turn will not rotate as much as the wheel to the outside of the turn, and by comparing the difference in rotational speed of each wheel, the ECM **200** locationing component may incorporate the knowledge that the cart **10** is turning a corner or turning around to supplement the locationing performed by the aisle RFID reader **225** and antenna **226**.

[0157] In various embodiments, the locationing component further includes an integrated compass for additional optimization of locationing for the cart. In some embodiments, the integrated compass is a digital compass. The compass provides various functions, including enabling the provision of an enhanced path layout for precise data reporting of shopping events. Another function of the compass is to provide directionality or a heading for the cart **10** in a store map. For example, the directionality provided by the compass enables display of a direction icon in a store map to identifiable areas of the store. For example, the point of sale (i.e., check out) area of the store, restrooms, store exits, and store departments. Such directionality is relative to the present location of the cart based on the proximity scan as described herein.

[0158] In various embodiments, the accuracy of the determination of cart location is improved by the addition of an Automatic Gain Control ("AGC") module. The use of an AGC module to control the transmit power and/or antenna attenuation of the aisle RFID reader **225** provides still another means of improving the accurate determine of cart location and, therefore, product awareness. In operation, the AGC module, which may be implemented in a software routine and executed from the ECM **200**, automatically controls each antenna **226**. Specifically, the AGC may be used, as understood by one of ordinary skill in the art, to either increase the transmit power or adjust attenuation. By doing so, sensitivity to tags may be controlled so that tags that are "unexpectedly" read, in that they are not located within the expected radiation pattern of the antenna **226** and aisle RFID reader **225** yet still are read, may be avoided. For example, the cart **10** may be located on aisle 4, but unexpectedly is reading tags from adjacent aisles 3 and 5. Tags from the adjacent aisle are "unexpected" based on the presently determined cart location. To correct for the unexpected tags, the AGC adjusts the attenuation or power of the read signal, such that the tags from

the adjacent aisles are no longer read. In another example, the cart **10** may be located on aisle 4, but is not reading all of the "expected" tags for aisle 4. In order to correct for the missing, but expected tags, the AGC adjusts the transmitted power until the expected tags, based on the cart's presently determined location, are read by the aisle RFID reader **225**. The AGC module may particularly be useful for improving accuracy of cart location in areas with higher interference or when many carts are in close proximity. By adjusting transmit power and/or attenuation (i.e., providing automated, real-time, dynamic power control from the RFID reader/antennae), the AGC module provides the additional advantage of conserving power by adjusting the power such that an appropriate and efficient amount of power is used in reading the RFID tags.

[0159] In testing, it has become clear that as there are more RFID tags broadcasting, it becomes more and more complex to discern whether there is a good transmit and receive from a particular RFID tag among the group. The present system presents a special challenge in that other applications do not use as many readers as close together. The present system has a uniquely high number of RFID readers in close proximity to one another, and the number of readers in close proximity to one another is constantly changing as carts move around.

[0160] Two things happen when the number of RFID readers in close proximity to another is a large number and constantly changing. First, passive RFID tags become saturated by all the RF energy. Second, each reader becomes saturated by too much interference, resulting in a phenomenon referred to as dense reader mode. Dense reader mode is when multiple RFID readers are broadcasting and receiving RFID information and the resulting RFID read performance is fluctuating and/or decreasing from the available number of RFID tag reads within the useable read range of the RFID tags. Specifically, dense reader mode is a mode of operation that prevents readers from interfering with one another when many are used in close proximity to one another.

[0161] As discussed previously, it is possible to partially optimize RFID reader performance by increasing or decreasing the gain until an optimal number of tags are detected. However, upon further testing, it has become apparent that additional optimization may be achieved by increasing or decreasing other characteristics in addition to power. For example, in addition to adjusting power up or down, RFID reader performance is optimized by increasing or decreasing the duty cycle (i.e. the transmit on and off time such as broadcast on for 2 seconds, and off for 8 seconds for a 20% duty cycle). Additionally, RFID reader performance may be further optimized by adjusting the antennas themselves. As there is an antenna directed to both sides of the cart (or alternatively, a single bidirectional antenna), each can be adjusted individually such that the antennas (or directions for a single antenna) are not matched, until an optimal number of tags are detected. For example, it is possible to alter the sleep time (i.e., the duty cycle for one antenna or antenna direction as relative to other antenna or antenna direction respectively).

[0162] Such optimization allows a greater number of readers to function with a limited RF domain. Such optimization also allows a large number of readers to co-exist within a small fixed area, such as in the Point of Sale (i.e. check out) area of a store.

[0163] In an embodiment, the locationing component is similarly operable to determine the location of a given product relative to the shopping cart **10** based on signals from the read component. The locationing component then displays on the video display **75** the location of the given product in relation to the cart **10**. In an embodiment, the locationing component may comprise software, hardware or a combination of hardware and software operable to determine the location of the shopping cart or a product in the store. The locationing component may, in an embodiment comprise hardware affixed to the cart with software incorporated therein, or may, in an embodiment, comprise hardware affixed to the cart operably coupled with software stored in and/or executed from the ECM **200** or another networked component. In an embodiment, the locationing component may be integrated within the ECM **200**.

[0164] In an embodiment, the location of the given product in relation to the location of the cart **10** may be graphically displayed on the video display **75** on a floor plan of the store, using an indicator to show the location of the cart **10** on the floor plan of the store and another indicator to show the location of the given product on the floor plan of the store. In an embodiment, the indicators may comprise directional arrows **309**, as will be discussed further below. In an embodiment, the location of the given product in relation to the location of the cart **10** may be described using words relative to a floor plan of the store. For example, such a written direction may be provided in the video display **75** by indicating "You are on Aisle 2, the Product you are looking for is on Aisle 9 to your left."

[0165] In an embodiment, the locationing component is operable so as to locate a given product being displayed in an advertisement on the video display **75** relative to the shopping cart **10**. In an embodiment, the locationing component then displays on the video display **75** the location of the product being advertised in relation to the cart **10**. In an embodiment, the location of the product being advertised in relation to the location of the cart **10** may be graphically displayed on the video display, using an indicator, such as an arrow, displayed adjacent to or as part of the advertisement to point towards the location of the product being advertised. In an embodiment, the location of the product being advertised in relation to the location of the cart **10** may be described using words to indicate to the consumer where she may find the product being advertised. For example, in or adjacent to an advertisement for laundry detergent, an indicator reading "Laundry Detergent ahead on the right" may be displayed based on the location of the cart.

[0166] Referring now to FIGS. **16**, **17** and **18**, upon determining the proximity of the cart **10** to any particular tag or tags **303** or **304**, the ECM **200** causes at least one advertisement **306** to be displayed to the consumer **85** on the video display **75**. The advertisement **306** displayed may be selected from a plurality of stored advertisements **307**, and the advertisement **306** may be selected based on the proximity of the cart **10** to a particular tag or tags **303** or **304**. In an embodiment, the plurality of stored advertisements **307** may be stored in the ISS **330**, streamed to the ECM **200** via a wireless LAN (e.g., transceivers **205** mounted in the store communicating with the network transceiver **204** in ECM **200**), and displayed on the video display **75** according to the location of the cart **10**. In an embodiment, the plurality of stored advertisements **307** may be stored in local memory **202** in the MOD, accessed, and displayed on the video display **75**. When the cart **10** enters a different area of the store and the aisle RFID reader **225** detects different RFID tags **303** or **304**, the location of the cart **10** is updated, and the advertisement **306**

is changed to reflect a different one of the plurality of the stored advertisements **307** based on the updated location of the cart **10**.

[0167] As shown in FIG. **16**, in an embodiment, the screen **77** of the video display **75** may be divided into a plurality of screen segments **308**, such that one of the plurality of stored advertisements **307** may be displayed in each screen segment **308**. In an embodiment, one of the plurality of screen segments **308** may be designated for display of consumer specific information, such as the running total of the products in the cart **10**, loyalty card or other consumer identifying information, product information pertaining to a specific product recently placed in the cart **10**, and the like.

[0168] Referring again to FIG. **16**, an exemplary display of advertising is shown. In an embodiment, a selected number of the plurality of stored advertisements **307** (equal to the number of screen segments **308**) are displayed in the screen segments **308**. Directional arrows **309** may be provided as an indication to point in the general direction of the advertised product on adjacent shelves. In an embodiment, one screen segment **308***a* may be more prominently sized than the other screen segments **308***b*, such that one of the plurality of stored advertisement **307** is displayed in the more prominently sized screen segment **308***a*, while others of the plurality of stored advertisements **307** are displayed in the less prominently sized screen segments **308***b*. This division of the screen **77** into screen segments **308** may be analogized to advertisements in a newspaper, wherein various of the advertisements may use one half, one quarter, one third of a page, etc. to fill a page with advertisements, and the cost of running an advertisement in each portion of a page may relate to the size of the advertisement relative to the rest of the page, the prominence of the advertisement on the page, the duration of time the advertisement is on the page, or combinations thereof. In an embodiment, the selected plurality of stored advertisements **307** may rotate being displayed on each screen segment **308**, such that the most prominent screen segment **308** displays each of the selected ones of the plurality of stored advertisements **307**, one after another, based on the time each one of the plurality of stored advertisements **307** has been displayed, or based on the location of the cart **10** between the shelves **301** and **302** in proximity to tags **303** and **304**, which may be further correlated to the proximity of the cart to the advertised product on the shelf.

[0169] Rather than showing multiple advertisements in various screen segments, a single advertisement at a time may be displayed in a screen segment generally reserved for advertising. A multi-tier approach may be used to determine pricing of advertisements when a single screen segment is devoted to advertising, given that the newspaper analogy may not apply. For example, advertising may instead be sold for zones of the store, whether based on what types of products will be shelved there, or based on consumer traffic patterns in the store. For example, pricing may be different and the types of advertisements that will be effective will vary based on whether the advertisement segment is purchased for advertisements to be displayed along high traffic routes such as the front aisle of the store, or the lower traffic areas, such as the pharmacy or deli. Selling advertising based on when and where it will be displayed may permit advertising companies to make decisions to effectively market products even while only one advertisement is displayed at a time in the video display **75**.

[0170] In an alternative embodiment, no one screen segment is sized more prominently than the other, but rather, a simplified, unique split screen Graphical User Interface ("GUI") is shown, as is illustrated in FIG. **21**A. The unique attributes of the GUI are associated with cart operation and LCD display position. The GUI provides the consumer with user-friendly easy access to cart functionality while maintaining readability and utility as viewed from the nose-mounted position at the opposite end of the cart from the consumer.

[0171] The GUI may be adjusting to one of a plurality of user levels, providing basic, intermediate, or advanced functionalities of the enhanced cart **10** based on how the consumer prefers to use the cart **10**. The GUI shown in FIG. **21**A enables the consumer to access the basic level of functionality, and does not require the use of any identifying information associated with the consumer to carry out the functions. In an embodiment, the video display defaults to the basic level of functionality when the cart **10** is powered on. The basic level of functionality displayed in the menu includes "Find Item," "Store Specials," and "View Help," each of which may be displayed in the form of a button, textual link or the like for selection by the consumer. In the segment below the menu, space is reserved for display of an advertisement that is placed there when so indicated by the ECM **200**, as discussed herein. Upon selection of a menu item, the GUI changes for each functional menu item.

[0172] Upon selecting "Store Specials," the GUI reflects the view of FIG. **21**B. In FIG. **21**B, the Store Specials are shown, along with a button or link to show a full screen view of the store specials (which eliminates the space below reserved for display of advertisements), or return to the main menu. If the "Full Screen" is not selected, the space for display of advertisements remains displayed.

[0173] Upon selecting "View Help," the GUI reflects the view of FIG. **21**C. In FIG. **21**C, a menu appears that presents to the consumer the choices of "find item," "store specials," "price check," and more, according to the desires of the store for which the cart is configured. A link for a tutorial on the use of the cart **10** may be provided, along with a button or link to return to the main menu.

[0174] From the "View Help" view of the GUI, when "Find Item" is selected, the GUI provides the view of FIG. **21**D, wherein the user may scroll and select letter or number characters using the five-way navigation device **123**. Additional links for returning to the main menu or viewing a store map may also be provided. The store map provided by the link, as shown in FIG. **21**E, may graphically indicate where in the store the cart is located as well as the location of an item for which the consumer is searching using the "Find Item" feature.

[0175] From the "View Help" view of the GUI, when "Price Check" is selected, the GUI provides the view of FIG. **21**F, which displays a price (or prices, if a sale price is additionally available, or if a discount price is available for loyalty consumer **85***s*). In the price check view, the consumer may scan a product using the scanner **215**, and the price is displayed. Also, as seen in FIG. **21**F, an advertisement may be displayed in the space reserved for advertisements. The price check feature may be activated via a price check button as described herein.

[0176] Referring now to FIG. **23**, an exemplary scrolling menu for a user interface is shown in accordance with embodiments of the present disclosure. In an embodiment, content displayed on the video display **75** is navigated and

controlled by way of a scrolling menu **1100**. The scrolling menu **1100** includes a plurality of functions that may be selected, each function represented by a graphical icon **1102***a-d*. The scrolling menu **1100** rotates the functions, represented by icons **1102***a-d,* as directed by a user, for example when the user indicates an upward scrolling motion, a downward scrolling motion, or sideways scrolling motion with the five-way navigation device **123**. The scrolling menu **1100** may present the functions in a horizontal or a vertical presentation (as shown in FIG. **23**), which may be navigated using the relevant directional controls of the five-way navigation device **123**. The scrolling menu **1100** may additionally include indicators of direction **1104** in order to help users determine how to use the directional control to scroll through the scrolling menu functions. In various embodiments, each function may alternatively or additionally be represented by text that easily identifies the function to a user. The text indicating a function may likewise be scrolled around within the scrolling menu.

[0177] The scrolling menu includes a selection position **1106**, such that when a particular function icon (**1102***b* as shown) is scrolled into the selection position **1106**, content associated with the function icon is displayed in some or all of the remaining space visible in the video display **75**. The video display **75** dynamically magnifies the content associated with whatever function icon is presently in the selection position **1106**, in order for the user to see and use the associated content to achieve an objective that the function offers.

[0178] In various embodiments, the selection position **1106** is indicated by an icon **1108** that differentiates the selection position **1106** from the other positions in the scrolling menu **1100**. As shown in FIG. **23**, the selection position **1106** is indicated by a right-facing arrow (i.e., the icon **1108**), indicating that the associated content for the function in the selection position **1106** is magnified in the area of the video display **75** to the right of the selection position **1106**. In alternative embodiments, any icon may be used to indicate the selection position **1106**, such as a magnifying glass or other attention-getting graphical icons or text such as the box **1106** shown in FIG. **23**.

[0179] In the video display **75**, the available display space may be apportioned into at least two areas, though in various embodiments, the available display space may be apportioned into more than two areas. As shown in FIG. **24**, in a first area **1200** of the available display space, the scrolling menu **1100** may be presented, while in a second area **1201** of the available display space, content **1110** is displayed, wherein the content **1110** is associated with the particular function presently displayed in the selection position **1106** of the scrolling menu **1100**. As the scrolling menu **1100** scrolls, the content **1110** displayed in the second area **1201** of the display space dynamically changes, preferably as rapidly as the user is scrolling the scrolling menu. As such, when each function icon is within the selection position **1106**, the content **1110** associated with that function is displayed, and the instant that the function within the selection position **1106** changes, so does the content **1110** displayed in the second area **1201**.

[0180] Thereby, the user is presented with a real-time graphical display that changes according to her wishes and comfort level with using the user interface. For example, an elderly consumer who is not accustomed to using a computer or a first time user of the media enabled shopper cart may scroll the scrolling menu slowly, and the associated content is displayed at the same rate, as she scrolls the menu, affording her as much time as she needs to look at and become familiar with the content. By comparison, a shopper who is more familiar with using the media enabled shopping cart may scroll the menu quickly to use functions that she is already familiar with, and will be displayed the selected feature dynamically, in real time.

[0181] In embodiments having the available display space apportioned into more than two areas, additional space may be used to display, for example, advertisements, a help function in addition to the function in the selection position, a store map, instructional photographs (for example, a photograph showing the user how to scan a product for a price check), and retailer sales, promotions, or logos. As may be seen in FIG. **25**, the first area **1200** is used to display the scrolling menu **1100**, the second area **1201** is used to display the content **1110** associated with the function in the selection position **1106**, and a third area **1202** of the available display space is used to display an advertisement, which may be selected based on the location of the cart within the store, or based on historical information known about the consumer's purchasing habits.

[0182] The scrolling menu **1100** may include any number of different functions, including, for example, a "Price Check" function, enabling the consumer **85** to scan an item to see the item's price, a "Store Special" function, enabling the consumer **85** to review (and optionally find on a store map) reduced or special price items, an "Item Finder" function, enabling the consumer **85** to request the location of a particular product, and a "Help" option, enabling the consumer **85** to receive helpful tips for use of the media enabled shopping cart. Additional optional functions may include various service functions, such as an interface with an in-store pharmacy for the consumer **85** to request the status of their prescription or receive notification of prescription availability, an interface with an in-store deli for the consumer **85** to make a deli order or receive notification of order availability, an interface for notification to the consumer **85** of completion of in-store auto servicing, an interface for interaction between the consumer **85** and customer service personnel for services such as rain checks, and other functions for in-store services.

[0183] Some or all of these functions may be included in the basic level of functionality. In addition to these functions, additional functionality of the cart **10** is available to users who desire to additionally enhance their shopping experience at an intermediate level of functionality and at an advanced level of functionality. At the intermediate level of functionality, the consumer may scan products at the cart **10** using the scanner **215**, view the scanned cart contents and a running total, and remove an item from the cart by scanning an item that has already been placed in the cart **10**. The intermediate level of functionality may be accessed by a consumer by simply starting to use the scanner **215**. To use the intermediate level of functionality, the consumer is not required to identify himself or herself, but may do so using a loyalty card associated with his or her identity, or by simply using a PIN. The consumer has the option to use a consumer created Personal Identification Number (PIN) which is unique to the consumer, but may or may not be associated with any consumer information such as name, address, and the like, in the same manner as a loyalty card identifier. Using a PIN, the consumer may retrieve saved electronic shopping lists, favorite recipes, and nutritional information in some advanced features, but does not have to

identify him or herself with a name and address. In an embodiment, the PIN comprises a phone number, optionally with a security code.

[0184] In an embodiment, the level of functionality selected and the resultant display screens and features made available to a consumer **85** is based upon existing data entered by the user or gathered from previous use of the cart **10** by the consumer **85**. For example, upon scanning of a loyalty card or entry of a PIN, a database may be consulted to determine what level of functionality the consumer **85** has selected or previously used, and then the appropriate functionality and display screens are presented to the user. Such data can be tracked over time and functionality adjusted to correspond to preferences and usage by the consumer **85**. For example, as the consumer **85** becomes experienced in using the system, more detailed information and functionality may be provided to the consumer **85**. Alternatively, tutorials or other help functions may be provided for inexperienced users.

[0185] At the advanced level of functionality, the consumer may additionally perform a cart level express check out, when products for purchase have already been scanned, view nutritional information and recipes, and view lists according to store departments. The consumer may also create, save, and retrieve electronic shopping lists, and obtain loyalty card prices and promotions.

[0186] In various embodiments, when the consumer identifies himself or herself to the cart **10** by way of a loyalty card, a consumer privacy notice may be displayed. The privacy notice may be displayed upon the first use of the cart **10** by a particular user who has identified himself or herself by way of a loyalty card, and thereafter, when the consumer identifies himself or herself via a loyalty card, the privacy notice will not be displayed since it has been displayed and accepted by the consumer before.

[0187] The unique attributes of the GUI are associated with cart operation and LCD display position. The GUI provides the consumer with user-friendly easy access to cart functionality while maintaining readability and utility as viewed from the nose-mounted position at the opposite end of the cart from the consumer.

[0188] Referring now to FIG. **24**, when the function icon for "Price Check" is scrolled in the scrolling menu **1100** to the selection position **1106**, content **1110** associated with the price check function is displayed in the second area **1201**. Specifically, the content **1110** may include instructions to a user, either textually or graphically, for how to carry out a price check. In various embodiments, the instructions indicate that to check a price of an item, the consumer **85** presses a particular one of the buttons of the five way navigation device **123**, and scans the item's UPC code using the scanner **215**.

[0189] The content **1110** associated with the price check function may additionally include, as shown in FIG. **24**, a helper icon **1205** to offer the consumer **85** an additional way to seek information, or a tutorial, on the use of the price check function. Although not shown in FIG. **24**, but discussed above, an advertisement, such as an advertisement for the item for which the price is being checked, another product made by the same company, or a competing product, may be displayed in a third area reserved for advertisements **1202**.

[0190] Upon a scan of an item by the consumer **85** while the content associated with the price check function is being displayed, the user interface dynamically changes to display the results of the price check, i.e., a price (or prices, if a sale price is additionally available, a discount price if available for loyalty consumer **85***s,* or a per unit price) as shown in FIG. **25**. The results of the price check may be displayed in a full screen, consuming all available display space not used for displaying the scrolling menu, or may be displayed in one area, such as a second area **1201**, while a third area **1202** is used for displaying other content, such as an advertisement for the item for which the price is being checked, another product made by the same company, or a competing product.

[0191] Additionally, as shown in FIG. **25**, a Price Check History may be displayed including each item for which the consumer **85** has performed a price check during the particular shopping trip. The Price Check History may be used by the consumer **85** to perform comparison shopping, or to decide which items to keep for purchase, and which items to return to a store shelf. An icon may be provided for clearing the Price Check History.

[0192] Referring now to FIG. **26**, when the function icon for "Store Specials" is scrolled in the scrolling menu **1100** to the selection position **1106**, content **1110** associated with the store specials function is displayed in the second area **1201**. Specifically, the content **1110** may include an item description **1401** and a feature price **1402** for each item priced for Store Specials (such as weekly specials). The item description **1401** may include a product name brand (e.g., Pringles™) and type (e.g., Original), as well as a size (e.g., 6 ounces) purchased for the feature price **1402**. In various embodiments, the content **1110** associated with the store specials function may include instructions to indicate that to view a location for a particular item from the list displayed for store specials, the consumer **85** may press a particular one of the buttons of the five way navigation device **123** while highlighted the particular item in which she is interested, and a location of the product relative to the present location of the cart may be displayed in a store map.

[0193] The list of store specials items may be displayed in a full screen, consuming all available display space not used for displaying the scrolling menu **1100**, or may be displayed in one area, such as a second area **1201**, while a third area **1202** is used for displaying other content, such as an advertisement, which may be selected based on the location of the cart within the store, or based on historical information known about the consumer's **85** purchasing habits.

[0194] The content **1110** associated with the store specials function may additionally include, as shown in FIG. **26**, a helper icon **1205** to offer the consumer **85** an additional way to seek information, or a tutorial, on the use of the store specials function.

[0195] Referring now to FIG. **27**, when the function icon for "Find Item" is scrolled in the scrolling menu **1100** to the selection position **1106**, content **1110** associated with the item finder function is displayed in the second area **1201**. Specifically, the content **1110** may include a keyboard **1500** in the second area **1201** and a list of items in store inventory **1502** pertaining to the search may be displayed in a third area **1202**. The graphical keyboard **1500** displayed in the second area **1201** may be navigated by the consumer **85** using the five way navigation device **123**. Specifically, the consumer **85** may use arrow buttons of the five way navigation device **123** to scroll through the letters in the keyboard **1500**, and press the center button or "*" button in order to select a character. Using the keyboard, the consumer **85** may spell out the brand name or the item name for a product.

[0196] Upon the consumer **85** typing a first letter of the brand name or item name of a sought after product **1508**, the list of items in store inventory **1502** pertaining to the search may be narrowed to items in the store inventory that start with the letter that was typed. For example, as shown in FIG. **27**A, when the letter "T" is entered in the keyboard **1500**, the list of items in store inventory **1502** is narrowed to only items with a brand name or item name in store inventory that start with the letter "T." Upon the consumer **85** typing a second letter of the brand name or item name of the sought after product **1508**, a narrowed list **1504** of the items in store inventory pertaining to the search may be displayed. For example, as shown in FIG. **27**B, when the letter "A" is entered in the keyboard **1500**, the list of items in store inventory **1502** is narrowed to the narrowed list **1504** to include and display only items with a brand name or item name in store inventory that start with the letter "T" and the next letter is the letter "A."

[0197] Likewise, upon the consumer **85** typing a third letter of the brand name or item name of the sought after product **1508**, a further narrowed list **1506** of the items in store inventory pertaining to the search may be displayed. For example, as shown in FIG. **27**C, when the letter "C" is entered in the keyboard **1500**, the list of items in store inventory **1502** is narrowed again to the further narrowed list **1506** to include and display only items with a brand name or item name in store inventory that start with the letter "T," having the second letter as the letter "A," and having the third letter as the letter "C," and so on. The consumer **85** may enter as few or as many letters of the brand name or item name of the product he or she seeks to find, such that if all letters of the name are entered, the list **1502** is narrowed to only the item he or she seeks to find. The consumer **85** may enter fewer than all of the letters of the name, and once the list is narrowed sufficiently to display in the list the sought after item, the consumer **85** may select the item from the list **1502**, **1504**, **1506**, or so on.

[0198] Upon selection of the item from the list **1502**, **1504**, **1506**, or so on, the result of the "find item" is displayed, identifying the sought after product **1508**. Specifically, the location of the sought after item **1508** is displayed on a store map **1600** relative to the present location of the cart as shown in FIG. **28**. The present location of the cart may be indicated with an icon representing the cart **1602**, and the location of the sought after item **1508** may be indicated with an icon representing the item **1604**. In various embodiments, an icon representing "zoom" **1608** may enable the consumer **85** to zoom in on the map for an additional level of detail to find the sought after item **1508**.

[0199] The content **1110** associated with the item finder function may additionally include, as shown in FIGS. **27**A-C and **28**, a helper icon **1205** to offer the consumer **85** an additional way to seek information, or a tutorial, on the use of the item finder function.

[0200] In some embodiments, a link for a tutorial on the use of the cart **10** may be provided, along with a button or link to return to the main menu. In some embodiments, a user may enter a question by way of a keyboard such as that described above with respect to the item finder function, and an answer, if one exists in a database of frequently asked questions, may be displayed. In some embodiments, an index of topics pertaining to frequently asked questions may be displayed, enabling the user to select any one relevant to her question for review.

[0201] Referring now to FIG. **29**, a method is shown for navigating the scrolling menu functions with a user interface in accordance with embodiments of the present disclosure. The user interface displays the scrolling menu in the first area of the available display space (block **1700**). The user interface also dynamically displays in the second area of the available display space content associated with a menu option in the selection position of the scrolling menu (block **1702**). The term "dynamic display" is intended to indicate that as the scrolling menu is scrolled in any direction (e.g., up and down for a vertical scrolling menu or right and left for a horizontal scrolling menu), the content displayed in the second area is changed at the same rate at which the scrolling menu is scrolled. When each menu option (i.e., a function icon) is within the selection position of the scrolling menu, the content associated with that particular function is displayed, and the instant that the function within the selection position changes (i.e., due to movement of the scrolling menu by the user), the content displayed in the second area is also updated.

[0202] If the user is scrolling the menu (at block **1704**), the user interface dynamically updates the content displayed in the second area to show different content (i.e., the content associated with the menu option presently shown in the selection position) (block **1706**). As described previously, the scrolling menu may be scrolled by the user at any rate, based on the comfort level of the user with the media enabled shopping system.

[0203] If the user is not scrolling the menu at block **1704**, then if the user is manipulating the content associated with the menu option in the selection position (at block **1708**), the user interface dynamically displays in the second area the result of manipulation of the content (block **1710**).

[0204] In the method described with respect to FIG. **29**, one menu option of the plurality of menu options may include the price check function. As such, the content associated with the menu option for the price check function dynamically displays a prompt to the user to scan an item at the cart to determine a price for the item, and upon detecting that an item has been scanned, dynamically displays the result of the manipulation of the content, i.e., displays a price for the item.

[0205] In the method described with respect to FIG. **29**, one menu option of the plurality of menu options may include the store special function. As such, the content associated with the menu option for the store special function dynamically displays at least one sale item (and preferably a list of the store's regular specials), and a price for the sale item. Upon selection of a particular sale item by the user to view a location for the sale item (i.e., manipulation of the content), the result of the manipulation of the content is displayed, that is the location for the sale item in a store map.

[0206] In the method described with respect to FIG. **29**, one menu option of the plurality of menu options may include the item finder function. As such, the content associated with the menu option for the item finder function dynamically displays an alphanumeric keyboard display, enabling entry of an item name. Upon entry of letters (resulting in dynamic display of valid combinations of the entered letters), and listing products of the valid combinations of the entered letters, and selection of an item from the list by the user (i.e., manipulation of the content), the result is dynamically displayed, that is the location for the entered and selected item in a store map. Generating the list of products of the valid combination of entered letters may include accessing a database of items in the store to display each item containing each letter or number successively entered in the alphanumeric keyboard, narrowing the list of items contained with each letter entered.

[0207] In the method described with respect to FIG. **29**, one menu option of the plurality of menu options may include the help function. As such, the content associated with the menu option for the help function dynamically displays a step-by-step explanation of use of the menu option to which the user most recently scrolled. Alternatively, the content associated with the menu option for the help function may display an index of topics for frequently asked questions, and upon selection of a topic from the index (i.e., manipulation of the content), the result is dynamically displayed, that is the answer to the selected topic.

[0208] With the content associated for each menu option, the user interface may additionally display advertising associated with the content associated with the menu option. In the sense used here, the "associated" advertising may include advertising for an item in the associated content (such as advertising for an item entered in the item finder function associated content), advertising for a competing item (such as advertising for an item that competes with an entered in the price check function associated content), or advertising simply relevant based on the location of the cart within the store.

[0209] Optionally, prior to display by the user interface, the user interface may generate a prompt to a user to perform an action, such as a prompt to the user that instructs the user to scan a loyalty card. Upon the user scanning a loyalty card, the plurality of menu options available for that user to choose in the scrolling menu may be broadened (if an advanced user), or limited (if a basic user).

[0210] In various embodiments, a price check may be performed locally, without accessing the store server to obtain a price for a particular item. In such embodiments, as in earlier described embodiments, the consumer **85** scans a product using the scanner **215**. A price database may be maintained locally in the ECM **200** of the cart **10**, such that a price check accesses the local database of prices, rather than obtaining the price wirelessly from the store server. Prices in the price database may be regularly updated, such as each night, or each time a cart is placed in the cart corral, in order for prices to stay up-to-date. Prices may alternatively be updated in real time, by wireless downloads of price changes to the price database at any time.

[0211] As mentioned above, the scrolling menu **1100** may include a number of different functions, including, for example, enabling a consumer **85** to remotely request and secure a place in a store department's service queue. In one embodiment as shown in FIG. **30**, a consumer **85** can navigate the scrolling menu **1100** with the five way navigation device **123** and scroll the store's deli function icon **310** into the selection position **1106**. Once the deli function icon **310** has been scrolled into the selection position **1106**, the content associated with the deli function icon **310**, including a request for a queue number assignment icon **311** is displayed in some of the remaining space visible in the video display **75**. The consumer **85** may then use the five way navigation device **123** to move the selection position **1106** from the deli function icon **310** to the displayed content associated with the deli function icon **310** and scroll the queue number assignment icon **311** into the selection position **1106** and activate the queue number assignment icon **311** to request a deli queue number **360**. This would be the equivalent of going to the deli and tearing off a paper tag to enter the deli queue.

[0212] In an embodiment, as shown in FIG. **30**, when the consumer **85** activates the queue number assignment icon **311**, this authorizes the ECM **200** to generate a queue number request signal with a cart specific identifier **312** that is communicated to a queuing number processor **313** via the network transceiver **204**. The network transceiver **204** is one of a number of electronic queue number-related information receivers employed in this electronic queuing system. Other electronic queue number-related information receivers include a queue number request signal receiver **364**, a queue number receiver **366**, and a queuing system transceiver **368**. Transmit and receive functions may be carried out by separate components or a common component (e.g., transceiver) as will be understood by those skilled in the art. The network transceiver **204** transfers the queue number request signal with a cart specific identifier **312** to the queuing number processor **313** via a wireless link between the network transceiver **204** and the queuing number processor **313**. The queue number processor **313** may generally analogized to, or recognized as, a typical queue number dispenser that may be found in various automotive, pharmacy, photo lab, and deli service areas. These dispensers, like the queue number processor **313** of the instant disclosure, may be configured to provide hard and/or electronic notice of the queue number place assigned to a requesting customer. Additionally, these devices may be networked so that direct requests for queue positions, e.g., physically pulling a tab from a dispenser, and remote requests for queue positions, e.g., the cart based request described below, may be coordinated and allocated in the most efficient and customer friendly manner. The queuing number processor **313** is configured with a queue number request signal receiver **364** to receive the queue number request signal with a cart specific identifier **312**. The queuing number processor **313** is also configured to generate successive queue number signals with a cart specific identifier **365** in response to queue number request signals **312**. The queuing number processor **313** communicates the queue number signal with a cart specific identifier **365** to the ISS **330** via the queuing number processor transmitter **367** and the store's WLAN. The ISS **330** receives the queue number signal with a cart specific identifier **365** via its queuing system transceiver **368**. The ISS **330** determines where in the service queue to place the cart **10** associated with the queue number request signal with a cart specific identifier **312**. The ISS **330** is configured with a queue number generator **369** for generating a queue number **360**. The ISS **330** is also configured with a queue number provider **361** that operates to communicate the assigned queue number **360**, to the cart **10** and to the queuing number processor **313**, via the queuing system transceiver **368** and the store's WLAN. The cart **10** receives assigned queue number **360** by way of the network transceiver **204**. The queuing number processor **313** receives the assigned queue number **360** by way of the queue number receiver **366**. When determining where in the queue to place the cart **10** associated with the queue number request signal with a cart specific identifier **312**, the ISS **330** may consider: the distance the cart **10** has to travel to reach the service queue; the number of requests for queue numbers, both non-remote and direct (e.g., walkups), over a period of time; the items contained on the consumer's **85** shopping list that has been uploaded onto the cart **10**; the loyalty or preferred status of the consumer **85**; allowing for the availability of sufficient and efficient queue numbers for store consumer **85***s* choosing to directly obtain a queue number from the service queue; and any other factors relating to placing the cart **10** associated with the queue number signal with a cart specific identifier **312** into the service queue, other than mere sequential requests for queue

numbers. The ISS **330** may also generate and communicate an estimated time to service signal **362** to the cart **10** via queuing system transceiver **368** and the store's WLAN which is received by the cart **10** by the network transceiver **204**. The ISS **330** may also generate other queue number-related information **363**, such as the current queue number being served, and communicate that other queue number-related information **363** to the cart **10** via the store's WLAN which is received by the cart **10** by the network transceiver **204**.

[0213] While the above details one embodiment of the remote service queuing functionality of the cart **10**, FIG. **31** represents another embodiment whereby the consumer **85** activates the queue number assignment icon **311**, this authorizes the ECM **200** to generate a queue number request signal with a cart specific identifier **312** that is communicated to the ISS **330** by the network transceiver **204** via the WLAN. The network transceiver **204** is one of a number of electronic queue number-related information receivers employed in this electronic queuing system. Other electronic queue number-related information receivers include a queue number request signal receiver **364**, a queue number receiver **366**, and a queuing system transceiver **368**. The ISS **330** receives the queue number request signal with a cart specific identifier **312** by way of the queuing system transceiver **368** and utilizes the queuing system transceiver **368** to query the queuing number processor **313** for a queue number **360**. The queuing number processor **313** is configured with a queue number request signal receiver **364** to receive the queue number request signal with a cart specific identifier **312**. The queuing number processor **313** is also configured with a queue number generator **369** to generate successive queue numbers with cart specific identifiers **322** in response to queue number request signals **312**. The queuing number processor **313** communicates a generated queue number with a cart specific identifier **322** to the ISS **330** via the queuing number processor transmitter **367**. The ISS **330** receives the queue number with a cart specific identifier **322** by way of the queue number receiver **366**. The ISS **330** is also configured with a queue number provider **361** that operates to communicate the assigned queue number **360** to the cart **10** via the queuing system transceiver **368** and the store's WLAN. The ISS **330** may also generate and communicate an estimated time to service signal **362** to the cart **10** via the store's WLAN which is received by the cart **10** by the network transceiver **204**. The ISS **330** may also generate other queue number-related information **363**, such as current queue number being served, and communicate that other queue number-related information **363** to the cart **10** via the store's WLAN which is received by the cart **10** by the network transceiver **204**.

[0214] FIG. **32** depicts another embodiment whereby the consumer **85** activates the queue number assignment icon **311**, this authorizes the ECM **200** to generate a queue number request signal with a cart specific identifier **312** that is communicated to the ISS **330** via the network transceiver **204**. The network transceiver **204** is one of a number of electronic queue number-related information receivers employed in this electronic queuing system. Other electronic queue number-related information receivers include a queue number request signal receiver **364**, a queue number receiver **366**, and a queuing system transceiver **368**. The network transceiver **204** transfers the queue number request signal with a cart specific identifier **312** to the ISS **330** via a wireless link between the network transceiver **204** and the ISS **330**. The ISS **330** communicates the queue number request signal with a cart specific identifier **312** to the queuing number processor **313** via the queuing system transceiver **368** and the store's WLAN. The queuing number processor **313** is configured with a queue number request signal receiver **364** to receive the queue number request signal with a cart specific identifier **312**. The queuing number processor **313** is also configured with a queue number signal generator **370** to generate successive queue number signals with a cart specific identifier **321** in response to queue number request signals **312**. The queuing number processor **313** communicates the queue number signal with a cart specific identifier **321** to the ISS **330** via the queuing number processor transmitter **367** and the store's WLAN. The ISS **330** receives the queue number signal with a cart specific identifier **321** by way of the queuing system transceiver **368**. The ISS **330** determines where in the service queue to place the cart **10** associated with the queue number signal with a cart specific identifier **321**, and utilizes the queue number generator **369** to generate a queue number **360**. When determining where in the queue to place the cart **10** associated with the queue number signal with a cart specific identifier **321**, the ISS **330** may consider: the distance the cart **10** has to travel to reach the service queue; the number of requests for queue numbers, both non-remote and direct over a period of time; the items contained on the consumer's **85** shopping list that has been uploaded onto the cart **10**; the loyalty or preferred status of the consumer **85**; allowing for the availability of sufficient and efficient queue numbers for store consumer **85***s* choosing to directly obtain a queue number from the service queue; and any other factors relating to placing the cart **10** associated with the queue number signal with a cart specific identifier **321** into the service queue, other than mere sequential requests for queue numbers. The ISS **330** is also configured with a queue number provider **361** that operates to communicate the assigned queue number **360**, to the cart **10** and to the queuing number processor **313**, via the queuing system transceiver **368** and the store's WLAN. The ISS **330** may also generate and communicate an estimated time to service signal **362** to the cart **10** via the store's WLAN which is received by the cart **10** by the network transceiver **204**. The ISS **330** may also generate other queue number-related information **363**, such as the current queue number being served, and communicate that other queue number-related information **363** to the cart **10** via the store's WLAN which is received by the cart **10** by the network transceiver **204**.

[0215] In yet another embodiment, as shown in FIG. **33**, the consumer **85** activates the queue number assignment icon **311**, this authorizes the ECM **200** to generate a queue number request signal with a cart specific identifier **312** that is communicated to a queuing number processor **313** via the network transceiver **204**. The network transceiver **204** is one of a number of electronic queue number-related information receivers employed in this electronic queuing system. Other electronic queue number-related information receivers include a queue number request signal receiver **364** and a queuing system transceiver **368**. The network transceiver **204** transfers the queue number request signal with a cart specific identifier **312** to the queuing number processor **313** via a wireless link between the network transceiver **204** and the queuing number processor **313**. The queuing number processor **313** is configured with a queue number request signal receiver **364** to receive the queue number request signal with a cart specific identifier **312**. The queuing number processor **313** is also configured with a queue number generator **369** to generate successive queue numbers with cart specific identi-

fiers **322** in response to queue number request signals **312**. The queuing number processor **313** communicates a queue number with a cart specific identifier **322** to the ISS **330** via the queuing number processor transmitter **367**. The ISS **330** receives the queue number with cart specific identifier **322** by way of the queuing system transceiver **368**. The ISS **330** is also configured with a queue number provider **361** that operates to communicate the assigned queue number **360**, to the cart **10** via the queuing system transceiver **368** and the store's WLAN. The ISS **330** may also generate and communicate an estimated time to service signal **362** to the cart **10** via the store's WLAN which is received by the cart **10** by the network transceiver **204**. The ISS **330** may also generate other queue number-related information **363**, such as the current queue number being served, and communicate that other queue number-related information **363** to the cart **10** via the store's WLAN which is received by the cart **10** by the network transceiver **204**.

[0216] In an additional embodiment, as shown in FIG. **34**, the consumer **85** activates the queue number assignment icon **311**, this authorizes the ECM **200** to generate a queue number request signal with a cart specific identifier **312** that is communicated to a queuing number processor **313** via the network transceiver **204**. The network transceiver **204** is one of a number of electronic queue number-related information receivers employed in this electronic queuing system. Other electronic queue number-related information receivers include a queue number request signal receiver **364**. The network transceiver **204** transfers the queue number request signal with a cart specific identifier **312** to the queuing number processor **313** via a wireless link between the network transceiver **204** and the queuing number processor **313**. The queuing number processor **313** is configured with a queue number request signal receiver **364** to receive the queue number request signal with a cart specific identifier **312**. The queuing number processor **313** is also configured with a queue number generator **369** to generate successive queue numbers in response to queue number request signals **312**. The queuing number processor **313** is also configured with a queue number provider **361** that operates to communicate the assigned queue number **360**, to the cart **10** via the queuing number processor transmitter **367** and the store's WLAN. The queuing number processor **313** communicates an assigned queue number **360** to the cart **10** via the store's WLAN which is received by the cart **10** by the network transceiver **204**. The queuing number processor **313** may also generate and communicate an estimated time to service signal **362**, or other queue number-related information **363**, such as the current queue number being served, to the cart **10** via the queuing number processor transmitter **367** and the store's WLAN, which is received by the cart **10** by the network transceiver **204**. In embodiments, the queuing number processor **313** may be a stand alone component (e.g., a computer located in a service area), may be part of the ISS **330**, or may otherwise be integrated or networked into a local area network within the store. In various embodiments, the queuing number processor **313** may receive the queue number request signal, generate a queue number, and provide the queue number to the cart.

[0217] As shown in FIG. **35**, upon receipt of the assigned queue number **360**, the ECM **200** generates a queue number indicator signal **380** and directs the video display **75** to display a queue number indicator **381** which informs the consumer **85** of his queue number **360**. As shown in FIG. **36**, in response to the receipt of an estimated time to service signal **362** the ECM **200** generates an estimated time to service countdown timer **385** and directs the video display **75** to display the estimated time to service countdown timer indicator **386** which informs the consumer **85** of the estimated time to service. As shown in FIG. **37**, the ECM may also generate an estimated time to reach the service queue timer and communicate an estimated time to reach the service queue signal **390** to the video display **75** directing the video display **75** to display an estimated time to reach the service queue timer indicator **391** which informs the consumer **85** of the estimated time to reach the service queue. Additionally, as shown in FIG. **38**, the queuing system may provide additional information related to the service queues to the ECM **200**, such as information related to the current queue number being served **395**. Upon receipt of this information, the ECM **200** may a generate a current queue number being served signal **396** and direct the video display **75** to display a current queue number being served indicator **397** to inform the consumer **85** of the current queue number being served. The information shown in FIGS. **35-38** may be shown individually or in various combinations (e.g., sequentially or simultaneously).

[0218] In the same manner as a position in a deli queue may be secured, positions in a butcher queue, bakery queue, pharmacy queue, automotive services queue, photo queue, or any other service department queue maintained by a store may also be secured.

[0219] In an embodiment, the cart **10** is additionally operable for various Shelf Management activities, such as, but not limited to, taking inventory, enabling price changes, product reorganization, restocking, returning misplaced products to the proper shelf location, and the like. The shelf management features enabled by use of the cart **10** are used by the retailer to electronically manage product location and pricing in the store.

[0220] In an embodiment, the aisle RFID reader **225** with antennas **226** may also scan individual products on the shelves **301** and **302** that are labeled with individual RFID tags. In this embodiment, the aisle RFID reader **225** with antennas **226** may scan, identify, and count each individual product by means of the individual RFID tag, and convey this information via the ECM **200**/network transceiver **204** to other network components to be discussed herein in greater detail below, enabling retailers to manage the store inventory to an exacting degree of accuracy on a continuous basis. Furthermore, all or a portion of the aisle tags **303** and **304** may be replaced via products labeled with individual RFID tags, and the system may otherwise function as described herein.

[0221] The aisle RFID reader **225** and antennas **226** may assist the store management with store planograms and inventory. A planogram is a diagram of fixtures and products that illustrates how and where retail products should be displayed, usually on a store shelf, bin or counter in order to influence consumer selection. Consumer packaged goods manufacturers often release a suggested planogram with their new product, to show how it relates to existing products in the same category, though stores also develop planograms of their own. Because a planogram involves the location of products within the store, the aisle RFID reader **225** and antennas **226** can detect the location of products at the Stock Keeping Unit ("SKU") level. Many inventory management systems assign a unique SKU for each product and also for its variants, and SKUs are assigned and serialized at the merchant level.

[0222] In use, when a cart **10** is moved through the store, the aisle RFID reader **225** and antennas **226** scan the SKU

assigned to product lines or product bundles on the shelves **301** and **302** that are labeled with individual RFID tags, each RFID tag being associated with a SKU. In this embodiment, the aisle RFID reader **225** with antennas **226** may scan, identify, and locate each product line or bundle by means of the RFID tag, and convey this information via the ECM **200**/network transceiver **204** to other network components to be discussed herein in greater detail below, enabling retailers to locate products throughout the store to manage, update and design the store planogram in an efficient and consistent manner.

[0223] The cart **10** enables re-mapping of the store. As discussed above, taking the cart **10** through various paths in the store following rearrangement of products will result in the cart **10** reading the RFID tags (e.g., SKU and/or product level tags) marking the new locations of each moved product relative to the anchor RFID tags (e.g., shelf level tags that have not moved), and convey the new locations to the system, such that the location of products in the store readily updated in relationship to the base store map.

[0224] Additionally, the cart **10** enables inventory that may be performed on an on-going basis with real-time updates for stores that sell products identified at the product level by an RFID tag. When any cart **10** reads no product level RFID tags at a location (marked by an anchor) where products are expected to be, the cart **10** may convey this information to the store system to update the inventory for the products that are no longer filling the shelves where expected. This allows real-time product inventory and restocking.

[0225] An employee is enabled by the cart **10** to quickly reshelve products that are misplaced, such as when a consumer decides not to purchase a product and leaves it at the Point of Purchase or in a location other than where the product is shelved. By using the shelf management system of the cart **10**, the employee may scan the misplaced product, and according the map, be directed to the location in the store where the scanned product is supposed to be shelved. The employee may even confirm that he or she is putting the product back in the appropriate location by scanning the sticker located on the shelf, because the sticker, usually with a price indicated, is associated with a specific location for a specific product.

[0226] When the store implements price changes for a list of products, an employee or group of employees usually must go around the store, find all the products with changed prices, and swap out signs and labels, which can be a time consuming task that occurs at regular intervals (e.g., weekly specials). The cart **10** enables an efficient process for dynamically changing prices for products accurately and quickly.

[0227] Specifically, for the price change process enabled by the cart **10**, price changes, such as for weekly specials and the like, are entered in a database of prices in the store system. An employee may then use a cart in shelf management mode to go throughout the store to change labels. A battery powered, wireless printer may be placed in the cart **10**, such as in the child seat **60**, and operably coupled (e.g., wired or wireless, such as Bluetooth, wi-fi, or infra red) to the ECM **200** for printing new price labels when the cart is located in the right location for a given product. The employee identifies himself or herself to the cart **10** by scanning an employee badge, much like scanning a loyalty card, that enables access to the shelf management features unavailable to consumers. The price changes entered into the database are conveyed to the cart's ECM **200** from the store system. Based on known locations of the products listed, the cart **10** displays to the employee a map, as shown in the view of FIG. **22**. The view of FIG. **22** shows the list of products for which a price change is being implemented, a location of each product on the list, the old price, the new price, and permits the employee to check a product off the list once the price has been changed.

[0228] The employee moves the cart to the location of a product on the list, and when the employee has found the location of the product, he or she may scan one item of the product to confirm that the shelf location is actually the right shelf location for the product on the list. Once the location is confirmed as correct for the product, the employee prints a new label on the wireless printer placed in the cart, and places the new label with the new price over the old label with the old price on the shelf. Once the new label is in place, the employee checks the product off the list, and the cart **10** conveys to the store system that the price change has been implemented at the shelf level. The store system may then charge the new price at the Point of Purchase, thereby allow real-time pricing updates.

[0229] In a large store, or in a store holding many specials such as for a holiday weekend, the process of updating for price changes is greatly sped up using one or more carts **10** as discussed herein. Additionally, the price changes are dynamic, in that they take effect as soon as a new price label is in place on the shelf. With the scanning ability of the cart **10** to confirm that the new price label is being placed in the proper location, price changes are also more accurate than relying on any given employee's knowledge of product placement within the store.

[0230] As the consumer checks out (i.e. renders payment) at the Point of Sale **300**, the POS computer **326** (e.g., computerized register) or POS server **325** may record the purchases made by that consumer **85** using that particular cart **10**. The POS computer **326**, the POS server **325**, and other systems such as security systems or consumer loyalty systems may be referred to generically as retailer systems. Retailer systems provide automated, computerized services with respect to consumer or store needs. In an embodiment, retailer systems may comprise components of the overall store network. In an embodiment, retailer systems may be stand-alone functional units operating separately from the store network. In an embodiment, a retailer system may comprise a point of sale system to interact with individual carts or consumers for processing payment at the conclusion of a shopping trip. In an embodiment, a retailer system may comprise a consumer loyalty system for rewarding consumer loyalty with discounts and other advantages, while tracking shopping history for advertising purpose. In an embodiment, a retailer system may comprise a security system for tracking the location of carts within the store or areas outside the store, such as, for example, alerting the store management to the location of carts when abandoned or broken, whether carts have left the store premises or when carts remain in the parking lot to be returned to the store.

[0231] In an embodiment, the cart **10** includes a cart RFID tag that may be read by a POS RFID reader coupled to the POS server computer **326** or POS server **325**. The cart RFID tag may be located anywhere on the cart, and in an embodiment is located on or in video display **75**, for example in the screen housing **92**, **93**. In an embodiment, the cart RFID tag is located on or in the video display **75** along with the network transceiver **204**. The POS RFID reader may read the cart RFID tag, thereby identifying a specific cart, for example via

the cart RFID tag associated with a serial or identification number. Alternatively, the POS system may use a bar code scanner to scan a bar code on the particular cart that uniquely identifies the cart and correlate the bar code with the serial or identification number. Alternatively, the particular cart may be identified and correlated manually at the POS, for example via entry of the serial or identification number labeled on the cart into the POS computer **326**. The information obtained, both by checkout (e.g., via bar code and/or basket RFID scanning) and/or by the cart **10** during shopping (e.g., via bar code and/or basket RFID scanning), may be correlated to a particular cart (based on the cart's unique identity) and/or transferred to the ISS **330** and the Host Central Server **340**. Such correlation may occur anonymously, for example, without reference to the identity of the consumer. Such information may further be correlated with a specific consumer, for example via scan or entry of a loyalty card, a pin code, a telephone number, or other consumer identifier. Such information may further be correlated with specific advertising displayed during the particular use of the shopping cart.

[0232] The basket RFID reader **227** in conjunction with the ECM **200** may have identified and stored the identity of each product placed in the cart **10** during shopping, such that upon approaching the Point of Sale **300**, the POS computer **326** may initiate checkout services based on the products for purchase known to be in the cart **10** by the ECM **200**, as communicated to the POS computer **326** via the network transceiver **204**. Thus, the RFID enablement of the shopping cart and the application of RFID tags at the individual product level will facilitate the shopper's Point of Sale checkout efficiency. Alternatively, the consumer **85** may use the scanner **215** to scan each product placed in the basket, such that upon approaching the Point of Sale **300**, the POS computer **326** may initiate checkout services based on the products for purchase known the be in the cart **10** by the ECM **200**, as communicated to the POS computer **326** via the network transceiver **204**.

[0233] In various embodiments, certain features may be additionally available at the Point of Sale. In one embodiment, the cart maintains a running total for items for purchase by the consumer **85** (i.e., the inventory of the cart). The total may be conveyed from the cart to the Point of Sale computer, and confirmed by the consumer **85** for completing the purchase transaction without requiring the inventory of the cart to be scanned over again at the Point of Sale. Upon displaying the cart total from the cart on the Point of Sale computer, the consumer **85** verifies that the amount is accurate, and completes the transaction (i.e., swipes a credit or debit card, completes her check, or provides a sufficient amount of cash).

[0234] In other embodiments, at the Point of Sale, the actual cart weight for the inventory of the cart is measured and compared for example to the known, expected weight for the inventory of the cart. Specifically, the cart and the contents are weight and compared to the weight for the cart that is known, and the weight for the contents, known based on the inventory of the cart. A difference between the actual cart weight for the inventory and the known, expected weight indicates a potential problem of theft, and may generate an alert to the store server and/or an employee.

[0235] Implementing the improvements described herein, an assisted self-checkout may be performed at a "regular" checkout lane (i.e., a Point of Sale computer equipped for purchase transaction). The consumer **85** proceeds with a shopping trip, scanning items for purchase as she goes, and placing the items in her cart. Upon her approach to the Point of Sale, the ECM **200** on her cart communicates the cart inventory and total from the cart to the Point of Sale computer. When consumer's **85** turn comes to complete the purchase transaction, the consumer's **85** cart **10** and its contents are weighed. In various embodiments, the cart or an employee may instruct the consumer **85** to remove personal items such as a handbag, as well as any child present in the child seat, in order for an accurate measurement of the weight of the cart and its contents. The actual weight of the cart and its contents are compared to the known, expected weight for the cart and the contents: the weight of the contents is calculated based on known weights for each item sold in the store and the inventory of the cart communicated when the consumer **85** approached the Point of Sale. If the actual weight exceeds the known, expected weight, an alert may be generated to notify store security or a store employee to assist the consumer **85** with removing personal items that should not have been included in the actual weight. In various embodiments, the alert is only generated if the weight difference exceeds a predetermined threshold amount.

[0236] Upon confirmation of the actual weight relative to the known, expected weight, the Point of Sale computer displays the cart total to the consumer **85** for verification. In an embodiment, the Point of Sale computer asks the consumer **85** "Does the total below equal the total for your cart? If so, press 1, and if not, press 2 for assistance." When the consumer **85** selects "2" if the total does not equal the cart total, a store employee may assist in finalizing the purchase, while when the consumer **85** selects "1," the Point of Sale computer further prompts the consumer **85** to complete the purchase transaction using her preferred method of payment (i.e., a credit card, check, cash, or debit account associated with consumer). The Point of Sale computer accepts the consumer **85**'s payment, provides any cash back requested by the consumer **85**, and the transaction is complete. In embodiments, the entire purchase transaction from the time the consumer **85** enters the Point of Sale transaction is limited only to the amount of time necessary for the consumer **85** to carry out her payment option, with only negligible time used to weigh the cart and contents for comparison and verify the cart total.

[0237] In use, the consumer **85** may also use the cart for services that in the related art would require the consumer to find a store employee. Via voice commands delivered to the voice activated interface **120** operably coupled to the ECM **200** and the in-store network, the consumer **85** may request the location of a specific product or request information pertaining to a particular product such as nutritional information, whether any specials for that product are available, and recipes that may incorporate a product. By activating the voice activated interface **120** by way of the five way navigation device **123**, the consumer **85** may also contact various in-store services, such as a pharmacy, deli counter, or automotive service station to initiate an order or check on the status of their order. The consumer **85** may additionally contact customer services within the store without waiting in line at a counter, by calling the customer service desk from the voice activated interface, enabling activities such as requesting a rain check or reporting a safety hazard in the store. In other embodiments, the consumer **85** may use the voice activated interface as a means of calling a person or service outside of the store, by using the ECM **200**'s communication abilities to connect to the Internet, enabling Voice Over Internet Protocol ("VoIP") technology. For example, a consumer **85** may wish

to check with their spouse regarding which product to buy or for shopping list products, and may use the VoIP enablement and voice activated interface **120** to call home.

[0238] Another in-store use is the bar-code scanning. A consumer **85** may choose to scan their own products with the scanner **215** inset into the handle **22** or pod **150**, enabling him to view a running total for the products in the cart **10** for purchase. By scanning the products during the shopping trip using the scanner **215**, the scanner **215** enables the consumer **85** to avoid waiting in the checkout lanes, as the ECM **200** may communicate the products being purchased, the price of each product, and the running total, as well as the value of any coupons used and scanned by the consumer **85** to the POS computer **326** upon arriving at the Point of Sale **300**. Bar-code scanning during shopping, in conjunction with the cart **10** communicating the scanned inventory to the Point of Sale **300**, facilitates more efficient check out services for consumers.

[0239] In addition to the voice activated interface **120**, the consumer **85** may use a number of the media enhancements of the cart **10** via the five way navigation device inset in the handle **22** or pod **150**. The consumer may press the voice activation button **122** (which preferably is a center button of the five way navigation device **123**) to activate the voice recognition system as well as to navigate other applications to access certain functions and information on the cart **10** such as product location and other product information. The five way navigation device **123** may be used to maneuver through the menu of options **124** displayed on the video display **75**.

[0240] As the cart supports voice recognition and additionally connects to the store server wirelessly (and thereby a connection to the Internet is provided to the cart), the cart may be enabled for communication via VoIP. VoIP on the cart offers the ability to call, for example, customer service within the store (for example, to report a spill or ask for assistance), store personnel (i.e. to reach the store manager for a complaint or compliment), and between carts (e.g., for store employees to use in set up, inventory, and the like). In one embodiment, a "call" icon may be provided on the screen of the cart. The user may select the icon either by a voice command or using the five way navigation device, and communicate via VoIP using the wireless internet to the store server, which is tied in turn to the customer service desk or the Internet generally to communicate by VoIP with individuals outside of the store (e.g., call home to check for an ingredient).

[0241] With the media enhancements, a consumer **85** will have the capability to formulate a shopping list at home on the Internet, forward the list to the store via email, and upon registering with a cart **10** with a loyalty card or other consumer identifier in the store, have their shopping list displayed on the video display **75** and be guided through the store in aisle and product order, showing specials, promotions, and product location for products on their shopping list.

[0242] In various embodiments, the cart provides the consumer **85** with shopper features to enhance the shopping experience. In one shopper feature, the consumer **85** is enabled to save and name shopping lists. In one embodiment, saving and naming shopping lists may be performed from a web site, while in other embodiments, saving and naming shopping lists may be performed directly on the cart. In further embodiments, saving and naming shopping lists may be performed on a mobile device, such as a handheld computer, a Blackberry™, or a mobile telephone, and transferred to the cart wirelessly, by infrared, or by Bluetooth™ enabled technology. Saved shopping lists may be tied to a user identifier, and retrieved upon scanning a loyalty card or other identifying card.

[0243] In some embodiments, an additional shopper feature provides a course directing the consumer **85** to each item on the shopping list. A shopping list that comprises, for example, a wedding or baby registry, may include a course providing directions for the consumer **85** to find each item on the list within the store, enabling faster and easier identification of list items for purchase. In various embodiments, the course may be displayed in a graphical representation of the store. In various other embodiments, the course may be generated by displaying at the top of the shopping list the items from the list closest in proximity and in the direction in which the cart is moving, constantly updated as the cart moves.

[0244] In another shopper feature, the consumer **85** is enabled to email a recipe or a link to a vendor's web site with a recipe to an email address. The email address may include an email address on file or an email address entered on the cart. In various embodiments, the email address is verified before sending.

[0245] In another shopper feature, the consumer **85** is enabled to scan and use coupons at the cart, such that the cart total accurately reflects the price discount provided by the coupons during the shopping trip. In such embodiments, the amount of savings for coupons, and identity of coupons and products for which the coupons are used are conveyed to the Point of Sale computer.

[0246] In another shopper feature, a folder of personalized reminders for the consumer **85** is stored. As with the shopping lists, the folder of personalized reminders may be tied to a user identifier, and retrieved upon scanning a loyalty card or other identifying card. Personalized reminders may include greeting card reminders for birthdays, anniversaries, and other holidays. Personalized reminders may additionally include prescription reminders for an in-store pharmacy. In various embodiments, when a reminder is generated by the cart to alert the consumer **85** with a prescription reminder, the consumer **85** may select the reminder to automatically place the prescription order (i.e., refill) with the in-store pharmacy, and another alert may be provided to the consumer **85** via the cart when the prescription order is ready to be picked up. Other personalized reminders may also be available, such as monthly refills for standard pantry items, pet items, and the like.

[0247] In various embodiments, any saved personalized items, such as lists or reminders, may be uploaded to the enterprise server, enabling the consumer **85** to access the items in the premises of any retailer that employs the overall system, making the items portable from retailer to retailer, assisting with comparison shopping and easier use of lists without the consumer **85** having to maintain different lists for the various stores where she shops. Furthermore, stored items may be automatically updated in real time when the consumer **85** makes additions or changes.

[0248] The cart **10**, by way of the media enhancements discussed above captures real-time purchasing behavior at the individual consumer level and provides back end data mining and analytical reporting. The cart **10** captures information that is specific down to the second about the cart **10** and a consumer's movement and interactions with the cart, and records it for use by retailers and advertisers. For example, consumer shopping patterns may be collected, anonymously

if preferred by the consumer, for analysis and use by advertisers, consumer goods manufacturers, and retailers. Retailers may use the cart information for store operations, as discussed herein with respect to shelf management. Additionally, service and maintenance information provides timely information to cart maintenance personnel regarding cart usage and problems.

[0249] In an embodiment, when the consumer **85** brings the cart **10** to the Point of Sale **300** at the conclusion of the shopping trip, the ECM **200** may communicate data to the ISS **330**, a POS server **325**, a POS computer **326**, or combinations thereof. In an embodiment, the ECM **200** communicates with ISS **330**, which in turn communicates with POS server **325**, which in turn communicates with POS computer **326**, and vice-versa. Typically, the POS server **325** and the POS computer **326** are part of an existing local area network in a given store, and the ISS **330** typically would be added as a new component to the existing local area network upon implementation of the media enabled shopping cart at a particular location. While not required, communication with the ECM **200** may be facilitated by directing such communication through the ISS **330**, rather than directly with ECM **200**.

[0250] In an embodiment, the cart **10** communicates the identity of the products being purchased to the POS computer **326** or POS server **325** via the ISS **330**, as the identity of each product was obtained during shopping when the consumer **85** scanned the product with the scanner **215** or the basket RFID reader **227** identified the product when it was placed in the cart **10**. Alternatively, the POS computer **326** or POS server **325** may obtain the identity of the products being purchased by the consumer **85** or a store employee scanning the bar code on each product at the Point of Sale **300**.

[0251] As the consumer checks out (i.e. renders payment) at the Point of Sale **300**, the POS computer **326** or POS server **325** may record the purchases made by that consumer **85** using that particular cart **10** as described herein. The information obtained, both by checkout and by the cart **10** during shopping, may be transferred to/from the ISS **330** and/or the Host Central Server **340**. Using data mining advances enabled by the cart **10** and its media enhancements, advertisers can individually track the effectiveness of advertising and pricing campaigns without compromising the personal identity of the consumer, alleviating privacy concerns of consumer groups. Alternatively, the information can be correlated to a specific consumer, for example via a loyalty card program, where the consumer is agreeable to such.

[0252] The data communicated by the ECM **200** may include data programmed to its memory, or data collected and stored in the memory over the course of the consumer's **85** shopping trips (initiated when the consumer **85** first moved the cart **10**). In an embodiment, such data may include any of the following: 1) the identity of the cart, 2) where in the store the cart has been, 3) which advertisements have been displayed to the consumer using the cart, 4) the length of time spent with each advertisement displayed and the length of time spent in specific areas or aisles of the store, 5) what products are in the cart **10** for purchase, 6) if known (such as from a loyalty card), consumer statistical or demographic data (gender, age, spending and purchasing habits), 7) store traffic patterns such as time, day, period, duration, etc., and 8) cart usage patterns (e.g., number used, typical user, functions accessed, etc.). Such data may be correlated to determine the effectiveness of advertising presented via the media enable cart to the consumer at the point of purchase (i.e., proximate the point in time when the consumer is selecting a particular product to be placed in the basket and purchased).

[0253] In another embodiment, data includes (I) information captured by the media cart system such as (1) cart specific data such as (a) cart identification, (b) date and time of shopping episode and each activity therein, (c) media cart/retailer user card UPC scanned by a greeter at the time the cart is handed to the shopper and scanned again by the shopper at checkout, at which time the card is returned to the store for use by another consumer **85**, which helps to link information captured by the media cart system with POS data, (d) cart tracking such as location and duration, and (e) cart activities such as product locator, price checks, shopping lists, basket views such as totals, UPC, number of items, etc; and (2) consumer campaigns, ads, promotions such as description of ad/promo, ad/promo reference number, campaign name and reference number, ad/promo start/stop time, ad/promo trigger variables (e.g., location, time, loyalty, non-loyalty), and location in store; (2) Point of Sale (POS) data such as (a) media cart/retailer user card UPC scanned by a greeter at the time the cart is handed to the shopper and scanned again by the shopper at checkout, at which time the card is returned to the store for use by another consumer **85**, which helps to link information captured by the media cart system with POS data, (b) product description including UPC code and manufacturer code, (c) regular product price, (d) purchased product price, (e) basket total, (f) number of items in basket, and (g) check-out lane number with time and date of check-out and transaction log number; (3) Loyalty club data such as (a) loyalty card number, (b) zip code, (c) loyalty shopper purchasing data such as items in basket and size of basket in dollars; and (4) store data such as (a) store address, (b) TDLinx code, (c) latitude and longitude coordinates, and (d) store demographic data such as number of adults/children in household, income bracket, age bracket, ethnic group, home owner or renter, education level, etc.

[0254] Such data may be used to product a variety of reports such as (1) shopper segmentation data such as (a) trip size, (b) trip duration, (c) day of week, and (d) time of day; (2) consumer campaign studies such as (a) item purchased, including display location and shelf location, (b) cross-purchase studies, including whether usage idea resulted in brand purchased or other brand purchased, (c) recipe ideas, including whether same resulted in brand purchased or other brand purchased, (d) basket analysis, including trip size impact, category linkage of basket, categories absent from basket, (e) cart tracking of anonymous shopper including types of shopping patterns (day of week, time of day, and duration of shopping episode), perimeter areas visited (duration at perimeter department and items scanned), aisles shopped (duration within aisle and items scanned), displays shopped (duration at display and items scanned), location data inquiries by shopper, nutrition information inquiries by shopper, product pricing inquires made by shopper, replacement of product entries, out of store coupons used, in store coupons used; and (f) loyalty card shopper tracking including types of shopping patterns (day of week, time of day, and duration of shopping episode), perimeter areas visited (duration at perimeter department and items scanned), aisles shopped (duration within aisle and items scanned), displays shopped (duration at display and items scanned), location data inquiries by shopper, nutrition information inquiries by shopper, product pricing inquires made by shopper, replacement of product entries, out of store coupons used, in store coupons used.

[0255] Such data may also be used for analytical analysis such as (1) location of cart including (a) verification of scanned items, (b) verification of cart after ad stimulus such as whether the cart moved after the ad, whether the shopper purchased the product, and if so when, whether shopper purchased a competing product, and if so comparative data such as price, brand quality, etc., (2) ad viewed in product display location, including verification of scanned item, quantity purchased, and duration of time at display prior to cart moving, (3) ad viewed in cross-usage category including (a) verification of scanned complimentary usage item and (b) verification of promoted brand in ad with usage occasion, for example whether cart moved to featured product location, and (4) whether shopper used product locator feature to find a product in the store, for example a complimentary or featured item.

[0256] In particular advertising data may be correlated or integrated with sales data to determine the effectiveness of the ad on an anonymous purchaser, or alternatively on an identifiable consumer such as via further correlation of data provided via a loyalty program. Where the consumer is identified, purchasing data may be tracked over time to determine the effectiveness of advertising and to determine whether additional and/or modified advertising is desired. Such correlations may further provide a wealth of useful data such purchasing patterns based upon consumer demographics; geographic or regional preferences or variations; product placement; ad content, style, timing, etc. For example, reports could be generated indicating store traffic patterns; ad impact; product volume, market share by consumer **85**/household/group/store/region, repeat purchases, etc.; consumer purchasing trends (products, dollar amounts, etc.); average size and content of total purchase per time, day, season, etc.; purchases by product category or segment, household, store, region, etc.; consumer survey results; etc.

[0257] The data mining capabilities of the media enhanced cart **10** described herein enable access to metrics unique to advertising as used in conjunction with the media enhanced cart **10**. The communications features of the cart **10** enable advertisers to remotely download to the ISS **330** (and subsequently to each cart **10**, in some embodiments) changes in advertising. Changes in advertising may be made in response to information obtained through data mining, as discussed herein. The media enhancements described herein enable advertisers to test advertisements in various demographic or geographic groups, and see the effectiveness in an immediate fashion, in that new statistical data is continuously being generated and reported. Such advertising may then be modified as needed and/or rolled out on in a large scale campaign.

[0258] The media enabled shopping cart system described herein provides a number of advantageous features including the ability to (a) target anonymous consumers with specific product promotions and information at the exact point of purchase and product selection in a retail store aisle; (b) provide specific promotions to loyalty card consumer **85***s* who have opted into the program; (c) provide shopping enhancement tools to the shopper such as store specials, electronic shopping lists, in-store product locator, recipes, nutritional information, and the ability to self scan products to speed checkout; (d) capture cart traffic patterns, cart purchases, interactions with the cart, (e) capture loyalty card consumer shopping and purchasing behavior who have opted into the program, (f) provide precise data mining and analytical reporting, (g) provide retailers with shelf management system to electronically manage product location and pricing in the store, and (h) modify shopper traffic patterns, for example redirecting consumers to low traffic aisles and/or to high margin products.

[0259] Referring to FIGS. **4** and **17**, the cart **10** may receive Wireless Local Area Network ("WLAN") signals including video streams in 802.11x format. In an embodiment, a plurality of wireless access points **320** may be located throughout the store to provide network coverage to each cart **10** located in the store, communicating by way of the network transceiver **204** (e.g., a wireless modem) in ECM **200**. The network transceiver **204** may be located anywhere on cart **10** and is operably coupled to ECM **200**. In an embodiment, the network transceiver is integrated with display **75**, or alternatively is integrated with ECM **200**. Data may be transferred to and from the cart **10** via the wireless link between the network transceiver **204** and the POS Server **325**. Data may be transferred to and from the cart **10** via the wireless link between the network transceiver **204** and the ISS **330**. The ISS **330** may store cart **10** data and act as an intermediary between the retailer's store systems and each cart **10**. The ISS **330** may also connect over a firewall **332** through a broadband modem/router **333** via a network (in an embodiment, the Internet or VPN **335**) to a Host Central Server ("HCS") **340** located at a host company's hosting facility. Advertising data and media may be transferred at regular intervals, such as daily, between each store's ISS **330** and the HCS **340**. Data transferred from each store's ISS **330** may be processed by the host company. In an embodiment, both the ISS **330** and HCS **340** utilize standard Microsoft server configurations or equivalents thereof along with supporting database management tools.

[0260] The Cart Explorer is an application that runs on the store server that is responsible for keeping track of all of the carts in the store. The Cart Explorer functions similar to Windows Explorer for keeping track of computers in a network or other system browser technology. The Cart Explorer maintains a status of each cart (e.g. systems, processes, etc.) in the fleet via the wireless connection to each cart: the health of each cart, the software version running on each cart, disk space cart has available, the location of each cart, the charging status, and the like. The Cart Explorer enables an individual (such as a trouble shooting employee or an employee trained in the setup and use of the overall system) to find and control each cart remotely, thereby keeping a store running while performing preventative and proactive maintenance. The individual may employ the Cart Explorer to display a selectable icon representing each cart in the fleet, such that when selected, a detailed cart status is magnified. The cart status may include an indication of battery life remaining, an indication of damage detected, and an indication of data corruption. The cart status may also include an indication of a present operating system, an indication of present displayable content, and an indication of a version of each supplemental executable program. The cart status may further include a graphical representation of the location of the cart in a store map.

[0261] In various embodiments, the Cart Explorer further includes a Cart Pager system. The Cart Pager system allows a particular cart or group of carts to be identified or notified from within an entire pool or fleet of carts. In one embodiment, when a cart is paged from the Cart Explorer, the cart issues an audible page alert, such as a beep. In another embodiment, when a cart is paged from the Cart Explorer, the cart displays a visible page alert, such as a message appearing

on the cart screen to notify a user. In various embodiments, the Cart Explorer Cart Pager system may be used to issue a page to just one cart, or all carts in the store. In various embodiments, the Cart Explorer Cart Pager system may be used to issue a page to the computer interface, or to the human interface (i.e., the screen). In various embodiments, the Cart Explorer Cart Pager system may include one way paging or two way paging.

[0262] In an embodiment, the host company is a parent company for a plurality of retail merchant stores which are networked as described herein. An advertising company or product manufacturer may be granted access to the HCS such that product advertising may be remotely and centrally downloaded to the host company for further dissemination to the various individual stores. Likewise, information such as product information, inventory, advertising effectiveness, etc. may be accessed from the HSC and uploaded by the advertising company or product manufacturer. In this way, an advertising company or product manufacturer may have a centralized access point for the upload and download of advertising or other product data, thereby allowing real-time access and adjustment to business activities based upon the effectiveness of a particular activity. For example, a new advertising campaign can be downloaded remotely to the HCS, disseminated on a large scale or small scale (e.g., a pilot run), and the results of the advertising campaign can be closely monitored in real or about real-time to determine if any adjustments need to be made.

[0263] The HCS server is operable to coordinate activity between all the various stores, keeping track of all the data from between stores. In various embodiments, a plurality of HCS servers may be implemented. In various embodiments, an HCS server may be dedicated to a particular chain of stores that are commonly controlled. The HCS server manages all data going to the carts (i.e., digital content management, passing ads, recipes, nutritional information, and the like to carts through stores) as well as all the data coming back from the carts (i.e., coordination of shop events). The HCS server keeps track of campaigns, banners, and subcategories for product placement and advertising, as well as the placement of ads and/or content according to Neilson-like categories or retailer defined categories.

[0264] In an embodiment, the operating system software of the ISS **330** may be based primarily on the Windows Server 2003 Operating System, IIS 6.0 utilizing the .NET Compact Framework, COM+. In an embodiment, the operating system software of the POS Server **325** may be based primarily on the Windows Server 2003 Operating System, IIS 6.0 utilizing the .NET Compact Framework, COM+. It should be understood that specific computing equipment and software are disclosed herein as non-limiting examples, and that equivalent or improved components may be substituted as such become available.

[0265] In an embodiment, the HCS **340** may comprise one or more of each of the following: a media server, a web server, and a database server. In an embodiment, the one or more media servers may operate on operating system software based primarily on Windows Server 2003 with a DivX Encoder, Media Windows Server, Flash Communications Server, and FTP Service. In an embodiment, the one or more web servers may operate on the operating system software based primarily on the Windows Server 2003 Operating System, IIS 6.0 utilizing the .NET Compact Framework, COM+. In an embodiment, the one or more database servers may operate on the operating system software based primarily on the Windows Server 2003, IIS 6.0 .NET Framework, COM+, SQL Server 2003 (cluster), MS SQLServer 2003, and MS SQLServer 2005. It should be understood that specific computing equipment and software are disclosed herein as non-limiting examples, and that equivalent or improved components may be substituted as such become available.

[0266] In an embodiment, various components of the system described herein may be located commonly, for example affixed to or integrated with the cart **10**. In an embodiment, various components of the system described herein may be distributed or dispersed over the system as a whole while operably coupled to one another to achieve the functions described herein, for example with one or more components located on the cart and one or more components located on a computing system such as a retailer's POS system, a LAN, a WAN, etc. Likewise, various components, subsystems, and the like as described herein may be implemented in software, hardware, or both and operable coupled within the system as a whole to perform their intended function as will be readily apparent to those skilled in the art.

[0267] Methods enabled by the present disclosure include mounting a display on a shopping cart basket as well as performing steps to make or carry out all other attachments, configurations, and embodiments described herein. Further, methods of use of a shopping cart having a basket mounted video display will be readily apparent from the present disclosure. Methods enabled by the present disclosure further include adding or retrofitting media enhancing hardware and software to a shopping cart (e.g., plastic and/or metal), as well as performing steps to make or carry out all other attachments, configurations, and embodiments described herein. Further, methods of use of a media enhanced shopping cart, including data mining, will be readily apparent from the present disclosure.

[0268] In embodiment as shown in the Figures, a cart **10** is provided having a video display **75** mounted on the nose **45** of the cart **10**. The cart **10** is further enhanced by the addition of a ECM **200**, a voice activated interface **120**, a scanner **215**, a five-way navigation device, **123**, a nose bumper handle **100**, an aisle RFID reader **225** with antennas **226** (looking outward from the cart **10**), optionally a basket RFID reader **227** with antennas **228** (looking inward on the contents of the basket **20**), and battery charger contact plates **105** or **230**, **231**. The voice activated interface **120**, the five-way navigation device **123**, and the scanner **215** are grouped in a pod **150** near the center of the handle **22**, as shown in FIG. **19**. In an embodiment, the voice activated interface **120** further comprises a push to talk voice activated interface having a hard or soft button on the pod **150** or handle **22** to push to activate the voice recognition feature. The push to talk button may be a dedicated button or may be one or a combination/sequence of buttons, for example on the five-way navigation device **123**. The pod **150** and/or handle **22** may further comprise a price check button, which may be a hard or soft button. Likewise, the price check button may be a dedicated button or may be one or a combination/sequence of buttons, for example on the five-way navigation device **123**. Pushing the price check button allows a consumer **85** to scan an item to determine its price, whereby the item is not added to the basket inventory or shopping total for the consumer **85**. It should be understood that any components described herein as residing in or on the handle **22** can likewise be integrated into the pod **150**, and in an embodiment all functional components positioned on the

handle **22** are incorporated into the pod **150**. The aisle RFID reader **225** is integrated with the ECM **200** and antennas **226** are located on either side of the housing **199** of the ECM **200**. The basket RFID reader **227** may be part of ECM **200** with antennas **228** located in the base **76**. The battery charger contact plates are positioned and configured as shown in FIGS. **6**, **7**, and/or **12**.

[0269] More specifically, the base **76** is mounted to the inside of front side wall **28** and conforms to the shape of the nose, for example slightly curved as shown. As shown in FIG. **19**, the base **76** may extend downward from the front edge **29** along the inside of front side wall **28** and taper downward with the lower edge **83** of the base contacting or about contacting the upper portion of the bottom **21** of basket **20**. A base **76** as shown in FIG. **19** forms a conduit for communication cables, power cords, etc. from the ECM **200** and/or battery. Such conduit may further extend under the lower edge of the bottom **21** of basket **20**, and may connect with the ECM **200** housing **199**. In an embodiment the conduit and/or base **76** may be integral with the basket **20**, for example molded in plastic.

[0270] The video display **75** is attached to the basket **20** such that the viewable area **78** is above the interior **54** of the basket. Likewise, the video display **75** is attached to the basket **20** such that the viewable area **78** is in a field of vision **84** of a consumer **85** pushing the cart **10** via the handle **22**. The video display **75** is foldable, and the hinge **79** is positioned about equal to the front edge **29** of the basket **20**. The bottom edge **82** of the screen **77** is positioned about equal to the front edge **29**, and in some embodiments may rest upon the front edge **29** to provide additional support to the screen **77**. For example, the outer bottom edges **98**, **99** may rest on the front or side upper edges for additional support. As shown in FIG. **2**, the nose **45** and upper edges may be slightly curved and the bottom edge **82** of screen **77** may be less curved such that the outer bottom edges **98**, **99** engage one or more of the upper edges in an unfolded position. In a folded position as shown in FIGS. **5** and **6**, the screen extends at about a **90** degree angle with respect to the base **76** (or alternatively extends within the plane defining the upper edges of the cart), which clears the nose and exterior of the cart for nesting with a second cart while also keeping the interior **54** of the cart clear such that the rear side wall **31** may swing upward into the interior **54** of the basket to receive the front side wall **28** of a third cart.

[0271] While preferred embodiments of the invention have been shown and described, modifications thereof can be made by one skilled in the art without departing from the spirit and teachings of the invention. The embodiments described herein are exemplary only, and are not intended to be limiting. Many variations and modifications of the invention disclosed herein are possible and are within the scope of the invention. Where numerical ranges or limitations are expressly stated, such express ranges or limitations should be understood to include iterative ranges or limitations of like magnitude falling within the expressly stated ranges or limitations (e.g., from about 1 to about 10 includes, 2, 3, 4, etc.; greater than 0.10 includes 0.11, 0.12, 0.13, etc.). Use of the term "optionally" with respect to any element of a claim is intended to mean that the subject element is required, or alternatively, is not required. Both alternatives are intended to be within the scope of the claim. Use of broader terms such as comprises, includes, having, etc. should be understood to provide support for narrower terms such as consisting of, consisting essentially of, comprised substantially of, etc. The various embodiments and components thereof disclosed herein may be used singularly or in combination with any other embodiment disclosed herein. Throughout the figures, like numbers correspond to like parts.

[0272] Accordingly, the scope of protection is not limited by the description set out above but is only limited by the claims which follow, that scope including all equivalents of the subject matter of the claims. Each and every claim is incorporated into the specification as an embodiment of the present invention. Thus, the claims are a further description and are an addition to the preferred embodiments of the present invention. The discussion of a reference herein is not an admission that it is prior art to the present invention, especially any reference that may have a publication date after the priority date of this application. The disclosures of all patents, patent applications, and publications cited herein are hereby incorporated by reference, to the extent that they provide exemplary, procedural or other details supplementary to those set forth herein.

What is claimed is:

1. A bi-directional recharge corral system for recharging a battery while storing a media enhanced shopping cart, comprising:

one or more corral sections each comprising a cart guiding portion and one or more charge rails extending from the cart guiding portion; and

a power supply operably coupled to the charge rails of the one or more corral sections,

wherein the power supply supplies current through the charge rails based on a direction of a shopping cart in the corral sections.

2. The bidirectional recharge corral system of claim **1**, further comprising a sensor for detecting the direction of the shopping cart in the corral sections relative to the corral sections.

3. The bi-directional recharge corral system of claim **1**, wherein the charge rails are positioned to engage a battery charging contact plate positioned on or proximate to one or more wheels on the shopping cart in one of at least two directions.

4. The bidirectional recharge corral system of claim **3**, wherein for a first direction, the power supply conducts current from positive to negative.

5. The bidirectional recharge corral system of claim **3**, wherein for a first direction, the power supply conducts current from negative to positive.

6. The bi-directional recharge corral system of claim **1**, further comprising a Power Management Unit that determines at least one of voltage and temperature, and based on at least one of voltage and temperature, calculates a charging algorithm by which to supply current through the charge rails.

7. The bi-directional recharge corral system of claim **6**, wherein the Power Management Unit is further operable to detect an error condition, and upon detection of an error condition, initiate remedial action.

8. The bi-directional recharge corral system of claim **7**, wherein the remedial action comprises performing a system reset, altering a charging algorithm applied, or combinations thereof.

9. The bi-directional recharge corral system of claim **7**, wherein the error condition comprises a failure of communication with a host computer of the shopping cart in the corral sections.

10. The bidirectional recharge corral system of claim **7**, wherein the error condition comprises a voltage across a battery of the shopping cart that is lower than a predetermined threshold voltage.

11. The bi-directional recharge corral system of claim **7**, wherein the error condition comprises a voltage across a battery of the shopping cart that is higher than a predetermined threshold voltage.

12. A method of charging a plurality of media enhanced shopping carts, comprising:

providing a conductive charge plate on a cart that is electrically coupled to a battery affixed to the cart, the battery operable to power one or more media enhancements of the cart;

providing a charging unit comprising a conductive charge rail electrically coupled to a power supply and a cart guiding segment comprising one or more guide grooves for positioning the cart in the modular charging unit;

positioning the cart in the guide grooves such that the conductive charge plate of the cart is in contact with the conductive charge rail of the modular charging unit;

forming an electrical connection between the conductive charge plate of the cart and the conductive charge rail;

detecting a direction of the cart in the charging unit; and

based on the direction of the cart in the charging unit, supply current from the power supply through the conductive charge rail and the conductive charge plate of the cart, thereby charging the battery of the cart in a bidirectional fashion.

13. The method according to claim **12**, wherein for a first direction, current is supplied from the power supply from positive to negative.

14. The method according to claim **12**, wherein for a second direction, current is supplied from the power supply from negative to positive.

15. The method according to claim **12**, further comprising determining at least one of voltage and temperature, and based on at least one of voltage and temperature, calculating a charging algorithm by which to conduct current through the charge rails.

16. The method according to claim **12**, further comprising detecting an error condition, and upon detection of an error condition, initiating remedial action.

17. The method according to claim **16**, wherein the remedial action comprises performing a system reset, altering a charging algorithm applied, or combinations thereof.

18. The method according to claim **16**, wherein the error condition comprises a failure of communication with a host computer of the shopping cart in the corral sections.

19. The method according to claim **16**, wherein the error condition comprises a voltage across a battery of the shopping cart that is lower than a predetermined threshold voltage.

20. The method according to claim **16**, wherein the error condition comprises a voltage across a battery of the shopping cart that is higher than a predetermined threshold voltage.

* * * * *