TRANSPERFECT

City of New York, State of New York, County of New York

I, Dan McCourt, hereby certify that the document "**JP2009064316A**" is, to the best of my knowledge and belief, a true and accurate translation from Japanese into English.

Dan McCourt

Sworn to before me this
August 11, 2023

Signature, Notary Public

WENDY POON
STATE
OF NEW YORK
NOTARY PUBLIC
Qualified in
Queens County
01PO6356754
MY COMMISSION EXPIRES 04-03-2025

Stamp, Notary Public

HANSHOW-Ex. 1021
Hanshow Am. Inc. v. SES-Imagotag Inc.
IPR2024-00189

(19) **Japan Patent Office (JP)**

(12) Kokai publication **(A)**

(11) Patent application publication number
No. **2009-64316**
(P2009-64316A)

(43) Date of publication: **March 26, 2009 (3.26.2009)**

(51) Int. C1.			F1				Theme Code (Reference)
G06Q	***50/00***	***(2006.01)***	G06F	17/60	118		3B118
G06Q	***10/00***	***(2006.01)***	G06F	17/60	506		5B035
G06Q	***30/00***	***(2006.01)***	G06F	17/60	326		5B058
A47F	***5/00***	***(2006.01)***	A47F	5/00		E.	
G06K	***17/00***	***(2006.01)***	G06K	17/00		F	

Not claimed for review | Number of claims 6 OL | (21 pages in total) | Continue to the last page

(21) Application number Japanese Patent Application 2007-232735 (P2007-232735)

(22) Application date September 7, 2007 (9.7.2007)

(71) Applicant 000001443
Casio Calculator Co., Ltd.
1-6-2 Honmachi, Shibuya-ku, Tokyo

(72)Inventor Hiroshi Akao
Casio Calculator Co., Ltd., 3-2-1 Sakaecho, Hamura, Tokyo
Within Hamura Technology Center, Casio Calculator Co., Ltd.

F term (reference) 3B118 FA11
5B035 BB09 CA05 CA06 CA23
5B058 CA17 CA23 K\A02

(54) **[Title of the Invention] Electronic shelf label and electronic shelf label system**

(57) [Summary]

[Problem] Provide the product information required by customers from electronic shelf label to the customer's mobile device to increase the convenience of the customer, and promote the purchase of products.

[Means for Solving] The electronic shelf label 1 is composed of a CPU (Central Processing Unit) 10, an input section 11 with a recipe key and traceability key, a display section 12 for displaying product price, a wireless communication section 13, a RAM (Random Access Memory) 14, a memory section 15 for storing product information such as recipe information and traceability information, and a short-range communication section 16 for communicating with a customer's mobile device, where the product information such as recipe information or traceability information stored in the memory section 15 is transmitted to the customer's mobile terminal through the short-range communication device 16 in response to an instruction operation of the input section 11 by the customer or a response from the mobile terminal.

[Selected Drawing] FIG. 2

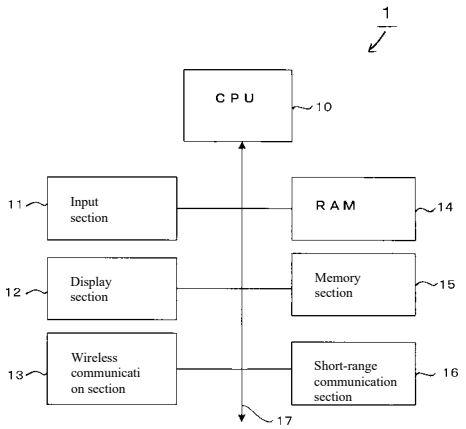

[Scope of Patent Claims]
[Claim 1]
An electronic shelf label that displays product price, equipped with a memory means for storing product information;
a short-range communication means for communicating with a customer's mobile device; and
a control means for transmitting product information stored in the memory means to a customer's mobile device by the short-range communication means.
[Claim 2]
The electronic shelf label of claim 1, comprising an instruction means operated by a user; and
the control means transmits the product information to a customer's mobile device in response to operation of the instruction means.
[Claim 3]
The electronic shelf label of claim 1, wherein the short-range communication means transmits a detection signal to detect that the customer's mobile terminal is approaching the electronic shelf label body;
the control means causes the product information to be transmitted to the customer's mobile device when the customer's mobile device responds to the detection signal transmitted by the short-range communication means.
[Claim 4]
The electronic shelf label of claim 1, wherein the memory means stores product information expressed in a plurality of formats;
the control means selectively reads product information expressed in a format that matches the customer's attribute from the memory means and transmits it to the customer's mobile device.
[Claim 5]
The electronic shelf label of claim 1, comprising connection means for connecting to a server device via a communication network, and a setting means for setting product information transmitted from the server device via the network to the memory means.
[Claim 6]
An electronic shelf label system in which an electronic shelf label and a server device are connected via a network, wherein
the server device includes a database memory means for storing product information and a transmission means for transmitting product information retrieved from the database memory means to the electronic shelf label via the network;
the electronic shelf label comprises a memory means for storing product information, a connection means for connecting to the server device via the network, a setting means for setting product information transmitted from the server device to the memory means, a short-range communication means for communicating with a customer's mobile device, and a control means for transmitting the product information stored in the memory means to the customer's mobile device through the short-range communication means.

[Detailed Description of the Invention]
[Technical field]
[0001]
The present invention relates to an electronic shelf label and an electronic shelf label system.
[Background Art]
[0002]
In a conventional electronic shelf label system, when a recipe request button provided on the touch display of the electronic shelf label is operated, recipe data is transmitted from the server and printed out from the printer of the electronic shelf label. (e.g., Patent Literature 1.)
[Patent Literature 1] JP 2005-165523 Publication
[Disclosure of the invention]
[Problems to be Solved by the Invention]

[0003]

However, in conventional electronic shelf label systems, it is necessary to install a printer for each electronic shelf label in order to output and print recipe data, and there are drawbacks of a large device configuration of the electronic shelf label and high cost. In addition, there is the inconvenience that the recipe data can only be obtained from print media. Therefore, there is a demand to improve the convenience of customers and thereby promote the purchase of products.

[0004]

The challenge of the present invention is to provide the product information required by customers from electronic shelf label to the customer's mobile device, increase the convenience of the customer, and promote the purchase of products.

[Means for Solving the Problems]

[0005]

The electronic shelf label of the invention according to claim 1 is an electronic shelf label for displaying product price that is equipped with a memory means for storing product information; a short-range communication means for communicating with a customer's mobile device; and a control means for transmitting the product information stored in the memory means to a customer's mobile device by the short-range communication means.

[0006]

The invention described in Claim 2 is the electronic shelf label of claim 1, comprising an instruction means operated by a user; and the control means transmits the product information to a customer's mobile device in response to the operation of the instruction means.

[0007]

The invention described in Claim 3 is the electronic shelf label of claim 2, wherein the short-range communication means transmits a detection signal to detect that the customer's mobile terminal is approaching the electronic shelf label body; the control means causes the product information to be transmitted to the customer's mobile device when the customer's mobile device responds to the detection signal transmitted by the short-range communication means.

[0008]

The invention according to claim 4 is the electronic shelf label of claim 1, wherein the memory means stores product information expressed in a plurality of formats; the control means selectively reads product information expressed in a format that matches customer's attributes from the memory means and transmits it to the customer's mobile device.

[0009]

The invention described in Claim 5 is the electronic shelf label of claim 1, comprising a connection means for connecting to a server device via a communication network, and a setting means for setting product information transmitted from the server device via the network to the memory means.

[0010]

The electronic shelf label system of the invention according to claim 6 is an electronic shelf label system in which an electronic shelf label and a server device are connected via a network, wherein the server device includes a database memory means for storing product information and a transmission means for transmitting the product information retrieved from the database memory means to the electronic shelf label via the network; the electronic shelf label comprises a memory means for storing product information, a connection means for connecting to the server device via the network, a setting means for setting product information transmitted from the server device to the memory means, a short-range communication means for communicating with a customer's mobile device, and a control means for transmitting the product information stored in the memory means to the customer's mobile device through the short-range communication means.

[Effects of the Invention]

[0011]

According to the present invention, it can provide the product information required by customers from electronic shelf label to the customer's mobile device, increase the convenience of the customer, and promote the purchase of products.

[Best Embodiments of the Invention]

[0012]

Embodiments of the invention will be described with reference to the drawings below. First, the configuration in this embodiment will be described.

FIG. 1 shows the overall configuration of the electronic shelf label system 100 according to this embodiment. As shown in FIG.

1, the electronic shelf label system 100 is configured with a plurality of electronic shelf label 1, a plurality of relays 2, and a store server 3. The electronic shelf label system 100 according to the present embodiment is installed in a store such as a supermarket, a department store, etc., and each electronic shelf label 1 is installed in a product display shelf in a store corresponding to each product. The electronic shelf label 1 communicates with the mobile device 4 in the possession of the customer who visited the store for a purchase by a short-range communication section, and sends the product information such as recipe information and traceability information to the customer's mobile device 4.

In the present embodiment, the store server 3 and the plurality of relays 2 are connected via a wired communication network N1, and the plurality of relays 2 and the plurality of electronic shelf label 1 are connected via a wireless communication network N2.

[0013]

In FIG. 1, as an electronic shelf label system 100, an example for convenience is shown in which three relays 2 are connected to a store server 3 and three electronic shelf label 1 are connected to the three relays 2, but the number of electronic shelf label 1 and 2 is not limited thereto; the number of electronic shelf label 1 and 2 is arbitrary.

The communication network N1 assumes a local area network (LAN), but may include a wide area network (WAN), such as the Internet, and may include an intranet (intranet), a telephone line, a private line, a mobile communication network, a communication satellite network, a Cable Television (CATV) line, an Internet provider, etc. The network form of the communication network N1 may also be a wired network, a wireless network, or a combination of a wired network and a wireless network.

[0014]

The store server 3 is connected to the electronic shelf label 1 via the communication network N1 and the relay 2, and is configured so that the shelf label information such as the product name and price displayed as the shelf label display and the product information such as recipe information and traceability information can be set for the electronic shelf label 1.

[0015]

FIG. 2 is a block diagram illustrating a major configuration of the electronic shelf label 1. As shown in FIG. 2, the electronic shelf label 1 is configured with a CPU (Central Processing section) 10, an input section 11, a display section 12, a wireless communication section 13, a RAM (Random Access Memory) 14, a memory section 15, and a short-range communication section 16, where each part connected via a bus 17. The electronic shelf label 1 is powered from the battery power supply section to each section using a battery[s], not shown, as the power supply section.

Moreover, the power supply unit is not limited to a battery, and it may be supplied from a power line, or it may be supplied with power from the store server 3 via a power line.

[0016]

The CPU 10 reads the control program stored in the memory section 15 and expands it to the RAM 14, and performs various processing based on the program expanded to the RAM 14. Specifically, the CPU 10 reads the display program or transmission program from the memory, not shown, in the memory section 15, displays the shelf label information by the display section 12, and transmits the product information to the mobile terminal 4 by the short-range communication section 16, when the electronic shelf label 1 displays the shelf label information or transmits the product information to the mobile terminal 4.

[0017]

The input section 11 comprises a recipe key 11a for transmitting recipe information to the mobile terminal 4 in response to customer operation, and a traceability key 11b for transmitting traceability information to the mobile terminal 4 in response to customer operation, as described below by FIG. 3, and outputs an operation signal to the CPU 10 in response to the operation of the key.

[0018]

The display section 12 has a display such as a liquid crystal display (LCD) and performs a display processing according to the display control signal [received as an] input from the CPU 10. The display section 12 displays and outputs shelf label information (product name, price) stored in the memory section 15.

[0019]

The wireless communication section 13 performs control for communication connection to the store server 3 via the relay 2 and

the wireless communication network N2. The wireless communication section 13 establishes communication with the store server 3 based on the IP address stored in the memory area, not shown, in the memory section 15, and communicates with the store server 3 via the relay 2.

[0020]

The RAM 14 expands a control program executed by the CPU 10 to the program storage area. Also, RAM 14 temporarily stores input data and processing result data generated during execution of the control program in the work area. Also, the memory content of RAM 14 is always stored by the power supply from a backup battery, not shown.

[0021]

The memory section 15 is composed of a hard disk drive (HDD) or non-volatile semiconductor memory, etc., and stores the control program executed by the CPU 10 and the data, etc. necessary at the time of execution of the control program.

[0022]

The short-range communication section 16 is configured by a short-range communication device, communicates with a customer's mobile device, and sends product information (recipe information, traceability information, etc.) stored in the memory section 15 to the customer's mobile device. In the present embodiment, a short-range communication device is a communication device that assumes communication at a short distance of 1 m or less, such as Radio Frequency Identification (RFID), Bluetooth®, infrared communication device, Infrared Data Association (IrDA), and the like.

The customer's mobile device 4 is a portable electronic device such as a cell phone, PDA, or portable gaming device, and the customer's mobile device 4 shall also have a short-range communication device that is equivalent to the short-range communication section 16.

[0023]

Next, the appearance configuration of the electronic shelf label 1 will be described. FIG. 3 is an exterior view illustrating the appearance of the electronic shelf label 1. As shown in FIG. 3, the electronic shelf label 1 includes a display section 12, a recipe key 11a, and a traceability key 11b. The display section 12 displays shelf label information stored in the memory section 15, and in the present embodiment, is configured to display a product name and a price. The electronic shelf label 1 is installed for each product for which the shelf label is displayed, and for example, it is installed on a shelf where “spinach” is displayed at a vegetable sales floor such as a supermarket or department store. In this case, as shown in FIG. 3, the electronic shelf label 1 displays “spinach” as the corresponding product name and “198 Yen” as the price.

In the present embodiment, the product name may also be displayed on the display section 12 as shelf label information, but not limited to this; instead of displaying the product name on the display unit 12, the shelf label may be displayed by sticking a seal or the like printed with the product name near the display section 12 of the electronic shelf label 1 or writing the product name in the empty space of the electronic shelf label 1 body. That is, the shelf label information displayed in the display section 12 may be price only.

[0024]

Next, the configuration of the store server 3 will be described. FIG. 4 is a block diagram showing the main configuration of the shop server 3. As shown in FIG. 4, the store server 3 includes a CPU (Central Processing section) 30, an input section 31, a display section 32, a communication section 33, a random access memory (RAM) 34, and a memory section 35, each of which is connected via a bus 36.

[0025]

The CPU 30 centrally controls each part of the store server 3. The CPU 30 expands the specified program from the system program and various application programs stored in the memory section 35 to the RAM 34, and performs various processing in cooperation with the program expanded to the RAM 34.

[0026]

In cooperation with the distribution program described below, the CPU 30 specifies a plurality of electronic shelf label 1 installed in the store, reads the recipe information corresponding to the specified electronic shelf label 1 from the recipe information database 35b described below in FIG. 6, sends it to the electronic shelf label 1, and reads the traceability information corresponding

to the specified electronic shelf label 1 from the traceability information database 35a described below in FIG. 6, and sends it to the electronic shelf label 1.

[0027]

The input section 31 is configured to include a keyboard with cursor keys, texts, numeric input keys, and various function keys, and output to the CPU 30 the operation signal that is pressed by the operator. The input section 21 [sic, input section 31?] may also include a pointing device, such as a mouse, to receive a position input signal and send it to the CPU 30.

[0028]

The display section 32 is composed of a Liquid Crystal Display (LCD), a Cathode Ray Tube (CRT), or the like, and displays the screen according to the display control signal from the CPU 30.

[0029]

The communication section 33 consists of a modem, a terminal adapter (TA), a router, a network card, and the like. The communication section 33 communicates with the electronic shelf label 1 via the connected communication network N1 and communication network N2.

[0030]

RAM 34 is a volatile memory. In addition, RAM 34 has a work area that stores various programs to be executed and data, etc. related to these programs.

[0031]

The memory section 35 is composed of a hard disk drive (HDD) having a magnetic recording medium, etc., where various programs and various data are readable and writable stored from the recording medium. The file configuration of the memory section 35 and the record structure of each file are described below in FIG. 6.

[0032]

Referring now to FIG. 5, the file configuration of the memory section 15 in the electronic shelf label 1 and the record structure of each file will be described. FIG. 5(A) is a diagram illustrating a file configuration of the memory 15. As shown in FIG. 5(A), the memory section 15 of the electronic shelf label 1 stores a shelf label file 15a, a traceability information file 15b, and a recipe information file 15c.

[0033]

The shelf label file 15a is a file that stores shelf label information such as the product name (product character), price (unit price), etc. of the product associated with the electronic shelf label 1. FIG. 5(B) is a diagram illustrating the record structure of shelf label file 15a. As shown in FIG. 5(B), the shelf label file 15a stores the product name (product character) and price as shelf label information. In the embodiment shown in FIG. 5(B), “spinach” is stored as a product name and “198 Yen” is stored as a price. Note that shelf label information is not limited to the product name and price (tax-inclusive price), but may also include information such as the manufacturer's desired price and the main price (not including consumption tax). In addition, shelf label information can be just price.

[0034]

The traceability information file 15b is a file that stores traceability information about products. FIG. 5(C) is a diagram illustrating the record structure of traceability information file 15b. As shown in FIG. 5(C), traceability information file 15b stores the product name, the place of production, the producer, and the harvest date.

Here, for example, at the stage of selling products such as vegetables, traceability information is information for recording and storing the place of production, producer, harvest date, etc. of the product, for tracking and tracing the product and its information. The traceability information is not limited to the information that shows the place of production, producer, harvest date, etc. as shown in FIG. 5(C). For example, if the product is meat, it may include the individual number of the cow or pig. In addition, if the product is fish, it may be information including the name of the fishing port, the name of the fishing vessel, the fishing area, etc., where the fish was fished.

[0035]

The recipe information file 15c is a file that stores recipe information about a product. FIG. 5(D) is a diagram illustrating a record structure of recipe information file 15c. As shown in FIG. 5(D), the recipe information file 15c stores a plurality of recipe information for the product associated with the electronic shelf label 1. For example, as shown in FIG. 5(D), if the product

corresponding to the electronic shelf label 1 is “Spinach”, "Boiled greens with dressing of mushrooms and spinach" is stored as recipe a, "Boiled spinach" is stored as recipe b, and "Bacon stir-fried spinach" is stored as recipe c. Note that the data format of the recipe information is not limited to text data as shown in FIG. 5(D), but may include image data, audio data, Portable Document Format (PDF) data, Hyper Text Markup Language (HTML) data, etc., and multiple data formats may be combined to configure the recipe information.

In the present embodiment, traceability information and recipe information are shown as product information, but not limited to product information, ingredient information and raw material information may be stored in the memory section 15 and transmitted to the customer’s mobile device 4.

[0036]

Referring now to FIG. 6, the file configuration of the memory section 35 at the store server 3 and the record structure of each file will be described. FIG. 6(A) is a diagram illustrating a file configuration of the memory section 35. As shown in FIG. 6(A), the memory section 35 of the store server 3 stores a traceability information database 35a and a recipe information database 35b.

[0037]

The traceability information database 35a is a database that stores traceability information such as the place of production, the producer, and the harvest date of the product in association with code information (product codes) such as bar codes and two-dimensional codes. FIG. 6(B) is a diagram illustrating the record structure of traceability information database 35a. As shown in FIG. 6(B), the traceability information database 35a is provided with records for each plurality of code information, and the traceability information is stored in correspondence with the code information. As shown in FIG. 5(C), traceability information consists of the product name, the place of production, the producer, and the harvest date.

[0038]

The recipe information database 35b is a database that stores recipe information about products in association with code information (product codes) such as bar codes and two-dimensional codes. FIG. 6(C) is a diagram illustrating the record structure of the recipe information database 35b. As shown in FIG. 6C, the recipe information database 35b has records for each of a plurality of pieces of code information corresponding to products, and stores recipe information related to products in association with the code information. In addition, some products do not have recipe information, and in this case, the code information and recipe information of the product are not stored.

[0039]

(First example)

Next, with reference to FIGS. 7 and 8, the operation in the first example of this embodiment will be described. First, with reference to FIG. 7, a recipe transmission process performed on an electronic shelf label 1 will be described. In this recipe transmission process, in response to the customer operating the recipe key 11a provided in the electronic shelf label 1, the CPU 10 of the electronic shelf label 1 reads the recipe information stored in the memory section 15, and transmits the read recipe information to the customer’s mobile device 4 by the short-range communication section 16. FIG. 7 is a flowchart illustrating operation of a recipe transmission process. This recipe transmission process is carried out under the control of the CPU 10 of the electronic shelf label 1.

[0040]

First, in step S11, “recipe key operated?” That is, whether or not the recipe key 11a of the input section 11a has been operated by the customer is determined. If a determination is made that the recipe key 11a has not been operated in this step S11 (step S11; NO), then step S11 is repeated. Then, it proceeds to step S12 when the recipe key 11a is determined to have been manipulated in step S11 (step S11; YES).

In step S12, the customer’s mobile device 4 is in mutual communication. That is, the CPU 10 of the electronic shelf label 1 sends a request signal from the short-range communication section 16 requesting the transmission of attribute information indicating the customer's attributes to the customer's mobile terminal 4, and the short-range communication section 16 receives attribute information sent from the mobile terminal 4 in response to this, and stores the received attribute information in a

predetermined memory area of the RAM 14. After performing step S12, it proceeds to step S13.

[0041]

In step S13, the CPU 10 determines the customer attributes based on attribute information stored in a predetermined memory area of the RAM 14. In the present embodiment, customer attributes refer to, for example, the language used by the customer (Japanese, Korean, English, Chinese, etc.), whether the customer is a regular customer, the age or age group of the customer. In the present embodiment, the expression of recipe information sent to the mobile device 4 is changed depending on the customer attributes determined in step S13.

For example, in one embodiment, as an attribute of the customer, information indicative of the language of use is obtained from the mobile device 4 and the recipe information expressed in the language used by the customer is transmitted to the mobile device 4. That is, for customers using Japanese, the recipe information in Japanese is sent to the customer's mobile device 4, for customers using Korean, the recipe information in Korean is sent to the customer's mobile device 4, and for customers using English, the recipe information in English is sent to the customer's mobile device 4.

Also, as another embodiment, customer type information indicating whether the customer is a regular customer is obtained as an attribute of the customer, and if the customer is a regular customer, a special recipe information is sent to the mobile device 4. That is, in the case of a general customer, a general recipe information is sent to the customer's mobile device 4, and in the case of a regular customer, the recipe information specially prepared for the regular customer's mobile device 4 is sent to the customer's mobile device 4.

Further, as another embodiment, as an attribute of the customer, information indicating the age or age group of the customer is obtained from the mobile device 4 and the recipe information of the content most suitable for the customer is transmitted to the mobile device 4. That is, in the case of a relatively young customer, a detailed recipe information is sent to the customer's mobile device 4, and in the case of middle-aged or elderly customers, a simple recipe information is sent to the customer's mobile device 4.

[0042]

In the next step S14, the recipe information is retrieved from the recipe information file 15c that matches the attributes of the customer. This is to change the representation of the recipe information sent to the mobile terminal 4 depending on the customer's attributes. For example, the recipe information file 15c shown in FIG. 5(D) is provided in multiple languages. That is, in the example of FIG. 5(D), recipe information is expressed in Japanese, but similar content is prepared in Korean, English, Chinese, etc. In step S14, recipe information expressed in a language corresponding to the language used that was determined as an attribute of the customer according to step S13 is read from recipe information file 15c. The retrieved recipe information is stored in a predetermined memory area of RAM 14.

[0043]

In the next step S15, the retrieved recipe information is sent to the customer's mobile device 4 by the short-range communication section 16. In this way, the customer's mobile terminal 4 receives recipe information sent by the short-range communication section 16 from the electronic shelf label 1 and displays it in the display section.

FIG. 12 shows a display example of the recipe information on the customer's mobile device 4 (in Japanese). The example of FIG. 12 shows that, in step S13, a customer attribute indicating the language of use "Japanese" was obtained from the mobile device 4, and in step S14, the recipe information expressed in Japanese was read from the recipe information file 15c and transmitted to the mobile device 4. That is, in the case of a customer using Japanese, recipe information in Japanese is sent to the customer's mobile device 4. In FIG. 12, recipe name, ingredients, and how to make are displayed in Japanese as recipe information.

FIG. 13 shows a display example of the recipe information on the customer's mobile device 4 (in Korean). The example of FIG. 12 shows that, in step S13, a customer attribute indicating the language of use "Korean" was obtained from the mobile device 4, and in step S14, the recipe information expressed in Korean was read from the recipe information file 15c and transmitted to the mobile device 4. That is, in the case of a customer using Korean, recipe information in Korean is sent to the customer's mobile device 4. In FIG. 13, recipe name, ingredients, and how to make are displayed in Korean as recipe information.

HANSHOW-Ex. 1021
Hanshow Am. Inc. v. SES-Imagotag Inc.
IPR2024-00189

FIG. 14 shows a display example of the recipe information on the customer's mobile device 4 (in English). The example of FIG. 12 shows that, in step S13, a customer attribute indicating the language of use "English" was obtained from the mobile device 4, and in step S14, the recipe information expressed in English was read from the recipe information file 15c and transmitted to the mobile device 4. That is, in the case of a customer using English, recipe information in English is sent to the customer's mobile device 4. In FIG. 14, recipe name, ingredients, and how to make are displayed in English as recipe information.

In this manner, in the present embodiment, the recipe information expressed in a language that matches the language used by the customer is transmitted from the electronic shelf label 1 to the customer's portable terminal 4, so that the customers can immediately understand and use the acquired recipe information.

[0044]

At step S16, the short-range communication section 16 waits to receive a response signal sent from the customer's mobile terminal 4. That is, when recipe information is sent from the electronic shelf label 1 to the customer's mobile device 4 in step S15, and the customer's mobile device 4 receives the recipe information, the customer's mobile device 4 sends a response signal to the electronic shelf label 1. In this case, the customer's mobile terminal 4 shall also be equipped with a short-range communication section equivalent to the short-range communication section 16 of the electronic shelf label 1.

[0045]

In step S17, a determination is made whether the transmission of recipe information to the customer's mobile device 4 has been completed, i.e., whether a response signal sent from the customer's mobile device 4 has been received by the short-range communication section 16. Once a determination is made that the transmission has not been completed in step S17 (step S17; NO), it returns to step S16 and waits for a response signal.

Then, once a determination is made that the transmission is complete in step S17 (step S17; YES), the recipe transmission process shown in FIG. 7 is terminated.

[0046]

Referring now to FIG. 8, a traceability transmission processing performed on the electronic shelf label 1 will be described. In this traceability transmission process, in response to the customer operating the traceability key 11b provided in the electronic shelf label 1, the CPU 10 of the electronic shelf label 1 reads the traceability information stored in the memory section 15, and sends the retrieved traceability information to the customer's mobile terminal 4 by the short-range communication section 16. FIG. 8 is a flowchart illustrating operation of a traceability transmission process. This traceability transmission process is carried out under the control of the CPU 10 of the electronic shelf label 1.

[0047]

First, in step S21, "Traceability key operated?", that is, whether or not the recipe key 11b of the input section 11 has been operated by the customer is determined. When a determination is made that the traceability key 11a has not been operated in step S21 (step S21; NO), step S21 is repeated. Then, it proceeds to step S22 when the recipe key 11a is determined to have been manipulated in step S21 (step S21; YES).

In step S22, as in step S12 of FIG. 7, the customer's mobile terminal 4 is in mutual communication. That is, the CPU 10 of the electronic shelf label 1 sends a request signal from the short-range communication section 16 requesting the transmission of attribute information indicating the customer's attributes to the customer's mobile terminal 4, receives the attribute information sent from the mobile terminal 4 in response to this, and stores the received attribute information in a predetermined memory area of the RAM 14. After performing step S22, it proceeds to step S23.

[0048]

In step S23, similar to step S13 in FIG. 7, the CPU 10 determines the customer attributes based on the attribute information stored in a predetermined memory area of the RAM 14. In the present embodiment, customer attributes refer to, for example, the language used by the customer (Japanese, Korean, English, Chinese, etc.), whether the customer is a regular customer, the age or age group of the customer. In the present embodiment, the expression of traceability information sent to the mobile terminal 4 is changed according to the customer attributes determined in step S23.

For example, in one embodiment, as an attribute of the customer, information indicative of the language of use is obtained from

the mobile device 4 and traceability information expressed in the language used by the customer is transmitted to the mobile device 4. That is, for customers using Japanese, the traceability information in Japanese is sent to the customer's mobile device 4, for customers using Korean, the traceability information in Korean is sent to the customer's mobile device 4, and for customers using English, the traceability information in English is sent to the customer's mobile device 4.

Also, as another embodiment, customer type information indicating whether the customer is a regular customer is obtained as an attribute of the customer, and if the customer is a regular customer, a special traceability information is sent to the mobile device 4. That is, in the case of a general customer, a general traceability information is sent to the customer's mobile device 4, and in the case of a regular customer, the traceability information specially prepared for the regular customer is sent to the customer's mobile device 4.

Further, as another embodiment, as an attribute of the customer, information indicating the age or age group of the customer is obtained from the mobile device 4 and traceability information of the content most suitable for the customer is transmitted to the mobile device 4. That is, in the case of a relatively young customer, a detailed traceability information is sent to the customer's mobile device 4, and in the case of middle-aged or elderly customers, a simple traceability information is sent to the customer's mobile device 4.

[0049]

In the next step S24, traceability information that matches the customer's attribute is read out from the traceability information file 15b. This is to change the representation of the traceability information sent to the mobile device 4 depending on the customer's attributes. For example, the traceability information file 15b shown in FIG. 5(C) is provided in multiple languages. That is, in the example of FIG. 5(C), traceability information is expressed in Japanese, but similar content is provided in Korean, English, Chinese, etc. In step S24, traceability information expressed in a language corresponding to the language of use determined as the customer attribute by step S23 is read from traceability information file 15b. The retrieved traceability information is stored in a predetermined memory area of RAM 14.

[0050]

In the next step S25, the retrieved traceability information is sent to the customer's mobile terminal 4 by the short-range communication section 16. In this way, the customer's mobile terminal 4 receives traceability information transmitted by the short-range communication section 16 from the electronic shelf label 1 and displays it on the display section.

FIG. 15 shows an example (in Japanese) of the display of traceability information on the customer's mobile device 4. The example of FIG. 15 shows that, in step S23, a customer attribute indicating the language of use "Japanese" was obtained from the mobile terminal 4, and in step S24, traceability information expressed in Japanese was read from the traceability information file 15b and transmitted to the mobile terminal 4. That is, in the case of a customer using Japanese, the traceability information in Japanese is sent to the customer's mobile device 4. In FIG. 15, the product name, place of production, producer, and harvest date are displayed in Japanese as traceability information.

In step S23, if a customer attribute indicating the language used "Korean" is obtained from the mobile device 4, the traceability information expressed in Korean is sent to the customer's mobile device 4, and as in the case of the traceability information shown in FIG. 13, the traceability information is displayed in Korean on the mobile device 4.

In addition, in step S23, if a customer attribute indicating the language of use "English" is obtained from the mobile device 4, the traceability information in English is transmitted to the customer's mobile device 4, and as in the case of the traceability information shown in FIG. 14, the traceability information is displayed in English on the mobile device 4.

[0051]

At step S26, the short-range communication section 16 waits to receive a response signal sent from the customer's mobile terminal 4. That is, when traceability information is sent from the electronic shelf label 1 to the customer's mobile device 4 in step S25, and the customer's mobile device 4 receives traceability information, the customer's mobile device 4 sends a response signal to the electronic shelf label 1. In this case, the customer's mobile terminal 4 shall also be equipped with a short-range communication section equivalent to the short-range communication section 16 of the electronic shelf label 1.

[0052]

In step S27, a determination is made whether the transmission of traceability information to the customer's mobile device 4 has been completed, i.e., whether a response signal sent from the customer's mobile device 4 has been received by the short-range communication section 16. Once a determination is made that the transmission has not been completed in step S27 (step S27; NO), it returns to step S26 and waits for a response signal.

Then, when a determination is made that the transmission is complete in step S27 (step S17; YES), the traceability transmission processing of FIG. 8 is terminated.

[0053]

(Second example)

Next, with reference to FIGS. 9 and 10, operation in a second example of this embodiment will be described.

First, with reference to FIG. 9, the recipe transmission process in a second example performed in electronic shelf label 1 will be described. In the recipe transmission process of this second example, the electronic shelf label 1 sends a probe signal (detection signal) to the customer's mobile device 4 by means of a short-range communication section 16, and when the customer's mobile device 4 responds to this probe signal, the CPU 10 of the electronic shelf label 1 reads the recipe information stored in the memory section 15, and sends the retrieved recipe information to the customer's mobile device 4 by means of the short range communication section 16.

FIG. 9 is a flowchart illustrating the operation of the recipe transmission process in a second example. This recipe transmission process is carried out under the control of the CPU 10 of the electronic shelf label 1.

[0054]

First, in step S30, the CPU 10 sends a probe signal (detection signal) to the customer's mobile terminal 4 by means of a short-range communication section 16. This probe signal is a signal to detect whether there is a mobile device 4 in the vicinity of the electronic shelf label 1, for example, for the present of a customer's mobile device 4 within 1 m (whether the mobile device 4 is approaching the electronic shelf label 1), and to confirm whether communication with the electronic shelf label 1 is necessary. After performing step S30, it proceeds to step S31.

[0055]

In step S31, it waits for a response from the customer's mobile device 4 to the probe signal emitted from the electronic shelf label 1. That is, in step S31, the short range communication section 16 waits for a response signal from the mobile terminal 4 to be received.

[0056]

In the next step S32, a determination is made whether there was a response from the customer's mobile device 4, i.e., whether a response signal sent from the customer's mobile device 4 was received by the short-range communication section 16. When a determination is made that there is no response from the customer's mobile terminal 4 in step S32 (step S32; NO), the processing of steps S30-S32 is repeated until a response is detected, and the sending of the probe signal and the waiting of the response signal are periodically performed.

Then, if a determination is made that there was a response from the customer's mobile terminal 4 in step S32 (step S32; YES), step S33 is performed.

[0057]

In step S33, the customer's mobile device 4 is in mutual communication. That is, the CPU 10 of the electronic shelf label 1 inquires the customer's mobile terminal 4 whether recipe information is required or traceability information is required, and sends a request signal from the short-range communication section 16 requesting the transmission of attribute information indicating the customer's attributes, in response to this, has the short-range communication unit 16 receive the recipe request or traceability request and the attribute information transmitted from the mobile terminal 4, and stores the received recipe request or traceability request and attribute information in the predetermined memory area of the RAM 14. After performing step S33, it proceeds to step S34.

[0058]

In step S34, a determination is made whether there was a recipe request from the customer's mobile device 4, i.e., whether a recipe request signal sent from the customer's mobile device 4 was received by the short-range communication section 16. If a determination is made in step S34 that it is not a recipe request (step S34; NO), other processing including traceability request is

performed. In this case, the traceability transmission process described below in FIG. 10 is performed.

Then, it proceeds to step to step S35, when a determination is made that there was a recipe request in step S34 (step S34; YES).

[0059]

In step S35, similar to step S13 in FIG. 7, the CPU 10 determines the customer attributes based on the attribute information stored in a predetermined memory area of the RAM 14. In the second embodiment, similarly to the first embodiment, customer attributes refer to, for example, the language used by the customer (Japanese, Korean, English, Chinese, etc.), whether the customer is a regular customer, the age or age group of the customer. That is, as in the first embodiment, the present embodiment changes the representation of the recipe information sent to the mobile device 4 in response to the customer attributes determined in step S35.

[0060]

In the next step S36, the recipe information matching the customer attributes is retrieved from the recipe information file 15c, similar to step S14 in FIG. 7. This is to change the representation of the recipe information sent to the mobile terminal 4 depending on the customer's attributes. For example, the recipe information file 15c shown in FIG. 5(D) is provided in multiple languages. That is, in the example of FIG. 5(D), recipe information is expressed in Japanese, but similar content is prepared in Korean, English, Chinese, etc. In step S14, recipe information expressed in a language corresponding to the language used that was determined as an attribute of the customer according to step S13 is read from recipe information file 15c. The retrieved recipe information is stored in a predetermined memory area of RAM 14.

[0061]

In the next step S37, similar to step S15 of FIG. 7, the retrieved recipe information is sent to the customer's mobile device 4 by the short-range communication section 16. In this way, the customer's mobile terminal 4 receives recipe information sent by the short-range communication section 16 from the electronic shelf label 1 and displays it in the display section.

In this case, as in the first example, recipe information that conforms to the customer attributes is displayed in the display section of the customer's mobile device 4. For example, if a language used as a customer attribute is obtained from the mobile device 4, the recipe information expressed in the language corresponding to the language used by the customer is transmitted from the electronic shelf label 1 to the mobile device 4 of the customer.

[0062]

At step S38, similar to step S16 of FIG. 7, the short-range communication section 16 waits to receive a response signal sent from the customer's mobile terminal 4. That is, when recipe information is sent from the electronic shelf label 1 to the customer's mobile device 4 in step S37 and the customer's mobile device 4 receives the recipe information, the customer's mobile device 4 sends a response signal to the electronic shelf label 1. In this case, the customer's mobile terminal 4 shall also be equipped with a short-range communication section equivalent to the short-range communication section 16 of the electronic shelf label 1.

[0063]

In step S39, as in step S17 of FIG. 7, a determination is made whether the transmission of recipe information to the customer's mobile device 4 has been completed, i.e., whether a response signal sent from the customer's mobile device 4 has been received by the short-range communication section 16. Once a determination is made that the transmission has not been completed in step S17 (step S39; NO), it returns to step S38 and waits for a response signal.

Then, once a determination is made that the transmission is complete in step S39 (step S39; YES), the recipe transmission process in the second embodiment shown in FIG. 9 is terminated.

[0064]

Next, with reference to FIG. 10, traceability transmission processing in a second example performed in electronic shelf label 1 will be described. In the traceability transmission process in this second embodiment, the electronic shelf label 1 sends a probe signal to the customer's mobile terminal 4 by means of a short range communication section 16, and when the customer's mobile terminal 4 responds to this probe signal, the CPU 10 of the electronic shelf label 1 reads the traceability information stored in the memory section 15, and sends the retrieved traceability information to the customer's mobile terminal 4 by means of the short range communication section 16.

FIG. 10 is a flowchart illustrating operation of traceability transmission processing in a second example; This traceability

transmission process is carried out under the control of the CPU 10 of the electronic shelf label 1.

[0065]

First, in step S40, the CPU 10 sends a probe signal (detection signal) to the customer's mobile terminal 4 by means of a short-range communication section 16. This probe signal is a signal to detect whether there is a mobile device 4 in the vicinity of the electronic shelf label 1, for example, for the present of a customer's mobile device 4 within 1 m (whether the mobile device 4 is approaching the electronic shelf label 1), and to confirm whether communication with the electronic shelf label 1 is necessary. After performing step S40, it proceeds to step S41.

[0066]

In step S41, it waits for a response from the customer's mobile device 4 to the probe signal emitted from the electronic shelf label 1. That is, in step S41, the short range communication section 16 waits for a response signal from the mobile terminal 4 to be received.

[0067]

In the next step S42, a determination is made whether there was a response from the customer's mobile device 4, i.e., whether a response signal sent from the customer's mobile device 4 was received by the short-range communication section 16. When a determination is made that there is no response from the customer's mobile terminal 4 in step S42 (step S42; NO), the processing of steps S40-S42 is repeated until a response is detected, and the sending of the probe signal and the waiting of the response signal are periodically performed.

Then, if a determination is made that there was a response from the customer's mobile terminal 4 in step S42 (step S42; YES), step S43 is performed.

[0068]

In step S43, the customer's mobile device 4 is in mutual communication. That is, the CPU 10 of the electronic shelf label 1 inquires the customer's mobile terminal 4 whether recipe information is required or traceability information is required, and sends a request a signal from the short-range communication section 16 requesting the transmission of attribute information indicating the customer's attributes, in response to this, has the short-range communication unit 16 receive the recipe request or traceability request and the attribute information transmitted from the mobile terminal 4, and stores the received recipe request or traceability request and attribute information in the predetermined memory area of the RAM 14. After performing step S43, it proceeds to step S44.

[0069]

In step S44, a determination is made whether there was a traceability request from the customer's mobile device 4, i.e., whether a traceability request signal sent from the customer's mobile device 4 was received by the short-range communication section 16. If a determination is made in step S44 that it is not a traceability request (step S44; NO), other processing including traceability request is performed. In this case, the recipe transmission process described in FIG. 9 is performed.

Then, it proceeds to step to step S45, when a determination is made that there was a traceability request in step S44 (step S44; YES).

[0070]

In step S45, similar to step S23 in FIG. 8, the CPU 10 determines the customer attributes based on the attribute information stored in a predetermined memory area of the RAM 14. In the second embodiment, similarly to the first embodiment, customer attributes refer to, for example, the language used by the customer (Japanese, Korean, English, Chinese, etc.), whether the customer is a regular customer, the age or age group of the customer. That is, as in the first embodiment, the present embodiment changes the representation of traceability information sent to the mobile device 4 in accordance with the customer attributes determined in step S45.

[0071]

In the next step S46, similar to step S24 in FIG. 8, the traceability information that matches the customer's attribute is read out from the traceability information file 15b. This is to change the representation of the traceability information sent to the mobile device 4 depending on the customer's attributes. For example, the traceability information file 15b shown in FIG. 5(C) is provided in multiple languages. That is, in the example of FIG. 5(C), traceability information is expressed in Japanese, but similar content

is provided in Korean, English, Chinese, etc. In step S46, traceability information expressed in a language corresponding to the language of use determined as the customer attribute by step S45 is read from traceability information file 15b. The retrieved traceability information is stored in a predetermined memory area of RAM 14.

[0072]

In the next step S47, similar to step S25 of FIG. 8, the retrieved traceability information is sent to the customer's mobile terminal 4 by a short-range communication section 16. In this way, the customer's mobile terminal 4 receives traceability information transmitted by the short-range communication section 16 from the electronic shelf label 1 and displays it on the display section.

In this case, as in the first example, the traceability information that conforms to the customer attributes is displayed in the display section of the customer's mobile device 4. For example, if a language used as a customer attribute is obtained from the mobile device 4, the traceability information expressed in the language corresponding to the language used by the customer is transmitted from the electronic shelf label 1 to the mobile device 4 of the customer.

[0073]

At step S48, similar to step S26 of FIG. 8, the short-range communication section 16 waits to receive a response signal sent from the customer's mobile terminal 4. That is, when traceability information is sent from the electronic shelf label 1 to the customer's mobile device 4 in step S47, and the customer's mobile device 4 receives traceability information, the customer's mobile device 4 sends a response signal to the electronic shelf label 1. In this case, the customer's mobile terminal 4 shall also be equipped with a short-range communication section equivalent to the short-range communication section 16 of the electronic shelf label 1.

[0074]

In step S49, as in step S27 of FIG. 8, a determination is made whether the transmission of traceability information to the customer's mobile device 4 has been completed, i.e., whether a response signal sent from the customer's mobile device 4 has been received by the short-range communication section 16. Once a determination is made that the transmission has not been completed in step S49 (step S49; NO), it returns to step S48 and waits for a response signal.

Then, once the transmission is determined to have been completed in step S49 (step S49; YES), the traceability transmission process in the second example shown in FIG. 10 is terminated.

[0075]

Referring now to FIG. 11, a product information transmission process performed under the control of the CPU 20 of the store server 3 will be described. FIG. 11 is a flowchart illustrating operation of a delivery process performed on a store server 3.

First, in step S51, among the plurality of electronic shelf labels 1 installed in the store, the electronic shelf label 1 to which recipe information and traceability information are distributed is specified.

[0076]

Next, in step S52, the recipe information corresponding to the specified electronic shelf label 1 is searched from the recipe information database 35b. That is, the shelf label number of the electronic shelf label 1 and the code information of the product corresponding to the electronic shelf label 1 are mapped and stored in the electronic shelf label table not shown in the memory section 35, and the CPU 30 of the store server 3 refers to this electronic shelf label table, reads the code information corresponding to the shelf label number of the specified electronic shelf label 1, and searches the recipe information corresponding to the retrieved code information from the recipe information database 35b. After performing step S52, it proceeds to step S53.

[0077]

At step S53, a determination is made whether the recipe information was searched or not. If a determination is made that the recipe information was searched in step S53 (step S53; YES), it goes to step S54 and if a determination is made that the recipe information was not searched (step S53; NO), it goes to step S56.

If a determination is made that the recipe information has been searched in step S53, step S54 performs the recipe information transmission preparation.

That is, in the recipe information transmission preparation of step S54, the recipe information retrieved in step S52 is stored in a transmission buffer, not shown, of the RAM 34, and preparations are made so that the recipe information can be transmitted.

[0078]

Next, in step S55, traceability information corresponding to electronic shelf label 1 specified by step S51 is searched from traceability information database 35a. In other words, the shelf label number of electronic shelf label 1 and the code information of the product corresponding to electronic shelf label 1 are mapped and stored in the electronic shelf label table not shown in memory section 35, and the CPU 30 of store server 3 refers to this electronic shelf label table, reads the code information corresponding to the shelf label number of specified electronic shelf label 1, and searches traceability information corresponding to the retrieved code information from traceability information database 35a. After performing step S55, it proceeds to step S56.

[0079]

In step S56, a determination is made whether traceability information has been retrieved. If a determination is made that the recipe information was searched in step S56 (step S56; YES), it goes to step S57 and if a determination is made that the recipe information was not searched (step S56; NO), it goes to step S59.

If traceability information is determined to have been searched in this step S56, then step S57 performs the traceability information transmission preparation.

That is, in the traceability information transmission preparation for step S57, the traceability information searched by step S55 is stored in the transmission buffer not shown in RAM 34 and preparation is made to transmit the traceability information. After performing step S57, it proceeds to step S58.

[0080]

In step S58, recipe information and traceability information are sent to the specified electronic shelf label 1. That is, recipe information stored in the transmission buffer by step S54 and prepared for transmission and traceability information stored in the transmission buffer by step S57 are transmitted to the electronic shelf label 1 via the communication unit 33 of the store server 3, the communication network N1, the relay 2, and the communication network N2. In the electronic shelf label 1, the recipe information and traceability information sent from the store server 3 are stored in the recipe information file 15c and traceability information file 15b of the memory section 15. After performing step S58, it proceeds to step S59.

[0081]

In step S59, a determination is made whether the distribution of recipe and traceability information for all electronic shelf label 1 has been completed. That is, in step S59, all records of the shelf label number stored in the electronic shelf label table are read to determine whether all electronic shelf label 1 are specified or not. If a determination is made in this step S59 that delivery to all electronic shelf label has not been completed (step S59; NO), then the next electronic shelf label 1 is specified based on the electronic shelf label table, and the processing of steps S52-S58 is repeated.

Then, if a determination is made in step S59 that distribution to all electronic shelf label has been completed (step S59; YES), the distribution processing shown in FIG. 11 is terminated.

[0082]

As described above, according to the electronic shelf label 1 and the electronic shelf label system 100 of this embodiment, the electronic shelf label 1 is configured to send product information such as recipe information and traceability information stored in the memory section to the customer's mobile device 4 by a short-range communication device in response to the customer's instruction operation or response of the mobile device 4, so that the product information required by the customer can be provided to the customer's mobile device 4 from the electronic shelf label 1, which can increase the convenience of the customer and facilitate the purchase of the product.

[Brief Description of the Drawings]

[0083]

[FIG. 1] A diagram illustrating the overall configuration of an electronic shelf label system according to an embodiment of the present invention.

[FIG. 2] A block diagram showing the main configuration of the electronic shelf label according to this embodiment.

[FIG. 3] An external view showing the external appearance configuration of the electronic shelf label according to this embodiment.

[FIG. 4] A block diagram showing the main configuration of the store server according to this embodiment.

[FIG. 5] A diagram showing the file structure of the memory section in the electronic shelf label and the record structure of each file.

[FIG. 6] A diagram showing the file structure of the store server memory section and the record structure of each file.

[FIG. 7] A flowchart showing the operation of the recipe transmission processing performed on the electronic shelf label according to the first example.

[FIG. 8] This is a flowchart illustrating the operation of traceability transmission processing carried out in the electronic shelf label according to the first example.

[FIG. 9] A flowchart showing the operation of the recipe transmission processing performed with the electronic shelf label according to the second example.

[FIG. 10] A flowchart showing the operation of traceability transmission processing performed on the electronic shelf label according to the second example.

[FIG. 11] A flowchart showing the operation of the delivery processing performed on the store server.

[FIG. 12] A diagram showing an example (in Japanese) of display of recipe information on a mobile device.

[FIG. 13]A diagram showing an example (in Korean) of display of recipe information on a mobile device.

[FIG. 14] A diagram showing an example (in English) of display of recipe information on a mobile device.

[FIG. 15] A diagram showing an example of the display of traceability information on a mobile terminal.

[Explanation of References]

[0084]

100 Electronic shelf label system

1 Electronic shelf label

2 Relay

3 Store servers

4 Mobile device

10 and 30 CPU

11, 31 Input sections

12 and 32 Display sections

13 Short-range communication section

14 AND 34 RAM

15 and 35 Memory sections

16 Short-range communication section

33 Communications section

[FIG. 1]

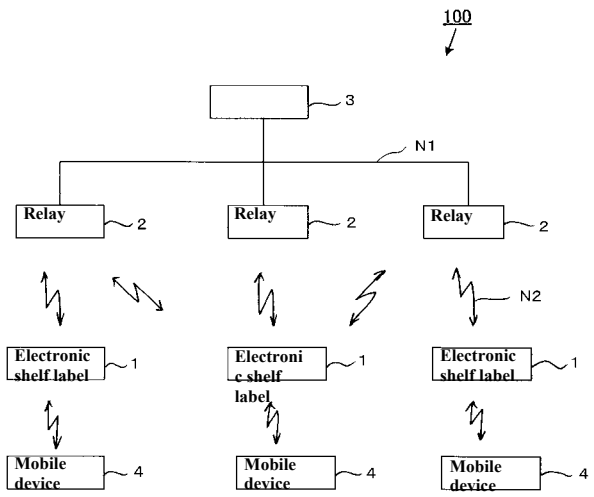

[FIG. 2]

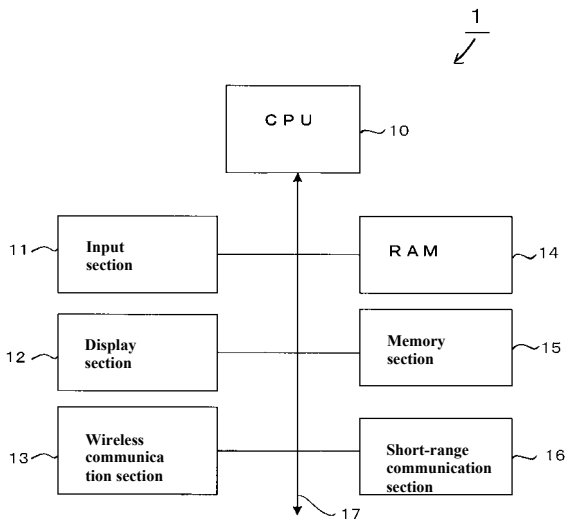

[FIG. 3]

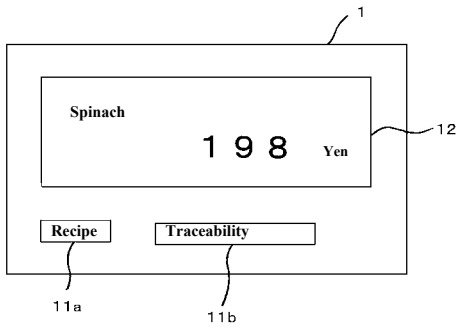

[FIG. 4]

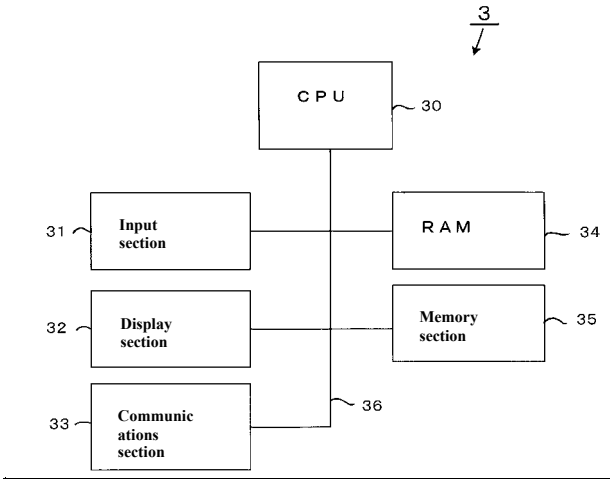

[FIG. 5]

(A)

15

Shelf label File	15a
Traceability Information File	15b
Recipe Information File	15c

(B)

15a

Product Name	Price
Spinach	198

(C)

15b

Traceability Information	Content
Product Name	Spinach
Place of production	Kawagoe City, Saitama Prefecture
Producer	000△△
Harvest Day	2007/08/24

(D)

15c

Recipe Information	Content
Recipe a	Boiled greens with dressing of mushrooms and spinach
Recipe b	Boiled spinach
Recipe C	Bacon stir-fried spinach

[FIG. 6]

(A)

35

Traceability Information Database	35a
Recipe Information Database	35b

(B)

35a

Product Code	Traceability Information
Code information 1	Traceability Information 1
Code information 2	Traceability Information 2
Code information 3	Traceability Information 3
Code information 4	Traceability Information 4
Code information 5	Traceability Information 5

(C)

35b

Product Code	Recipe Information
Code information 1	Recipe 1
Code information 2	Recipe 2
Code information 3	Recipe 3
Code information 4	Recipe 4
Code information 5	Recipe 5

[FIG. 7]

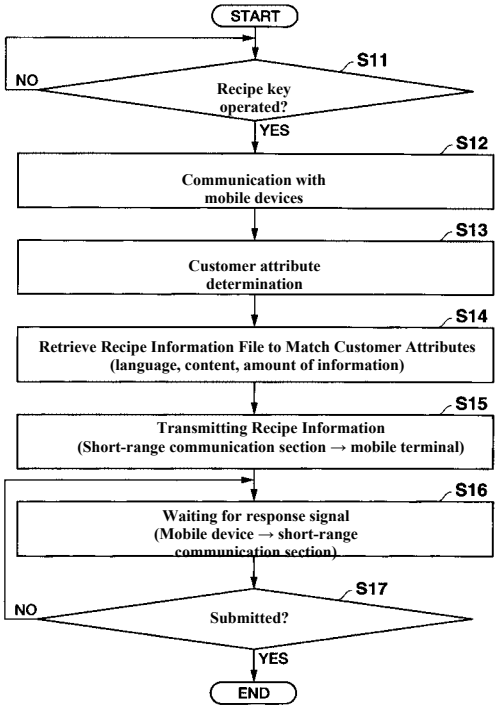

[FIG. 8]

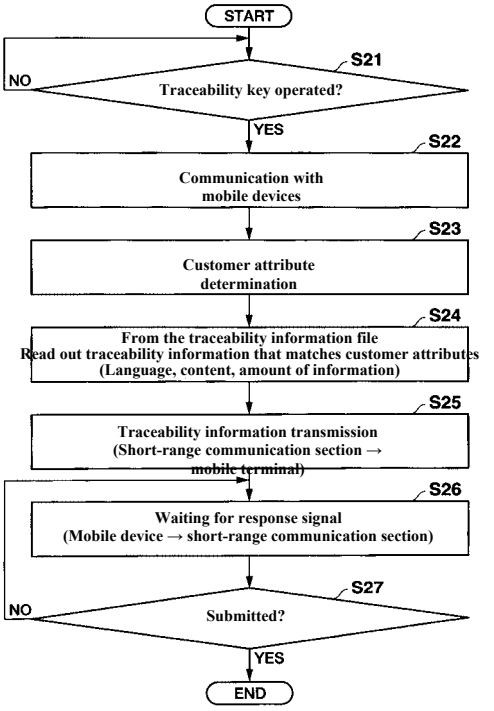

[FIG. 9]

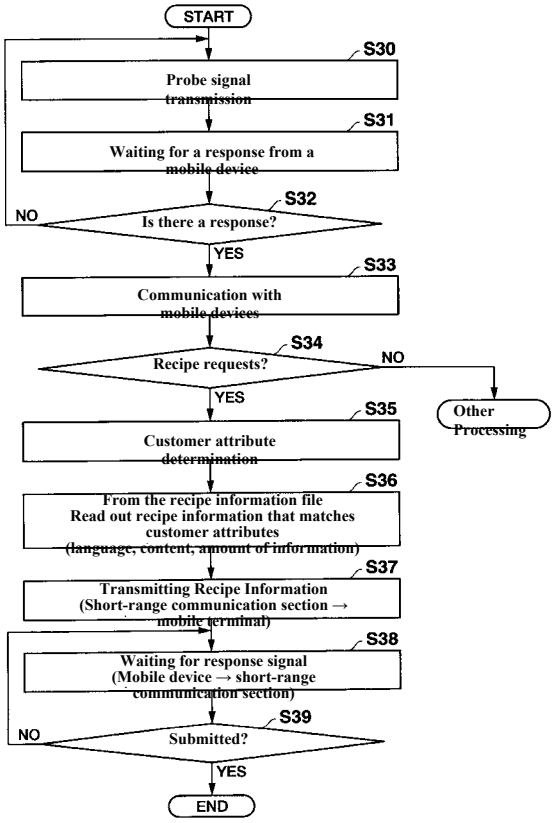

[FIG. 10]

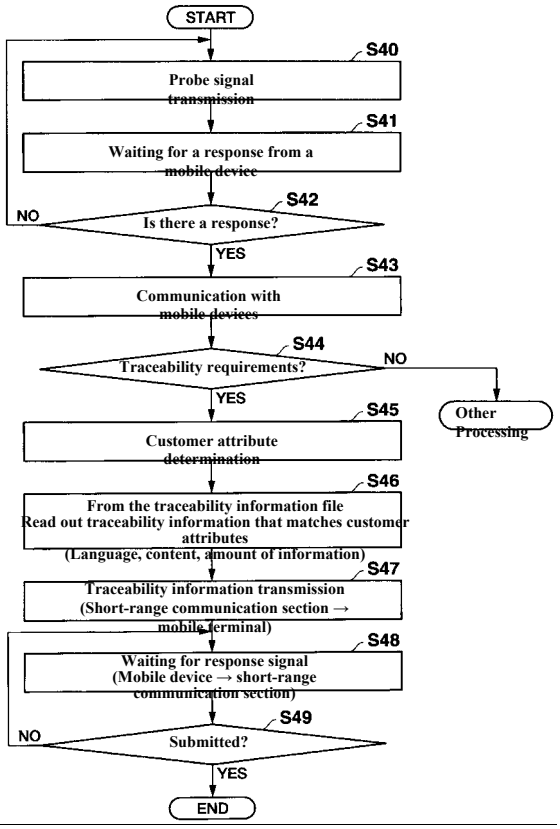

[FIG. 11]

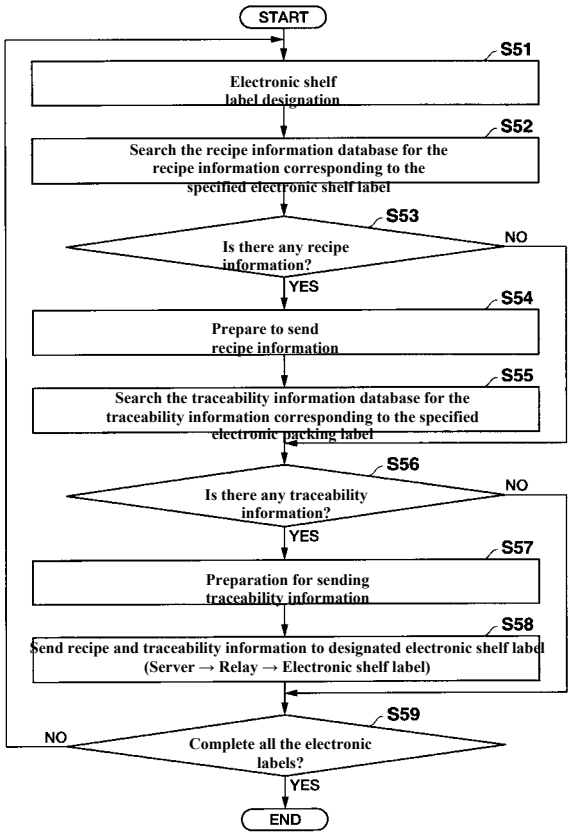

[FIG. 12]

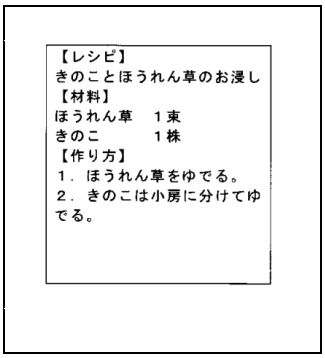

[FIG. 13]

【레시피】
버섯과 시금치의 나물 무침
【재료】
시금치 1다발
버섯 1주
【만드는 방법】
1. 시금치를 삶는다.
2. 버섯은,오부사로 나누어 삶는다.

[FIG. 14]

【Recipe】
Boiled greens with dressing of a mushroom and the spinach
【Materials】
One bundle of spinach
One stock of mushroom
【How to make】
1. boil spinach.
2. divide a mushroom into a small room and boil it.

[FIG. 15]

[Traceability Information]
Product name: Spinach
Place of production: Kawagoe City, Saitama Prefecture
Manufacturer: 100
Day of harvest: 08/24/2007

Continued from the front page

(51) Int. Cl.			FI			Theme Code (Reference)
G06K	***19/07***	***(2,006.01)***	G06K	17/00	L	
G06K	***19/00***	***(2,006.01)***	G06K	19/00	H	
G06F	*19/00*	*(2,006.01)*	G06K	19/00	Q	
			G09F	19/00	J	

HANSHOW-Ex. 1021
Hanshow Am. Inc. v. SES-Imagotag Inc.
IPR2024-00189