US 20090049781A1

(19) United States

(12) Patent Application Publication

(10) Pub. No.: US 2009/0049781 A1

(43) Pub. Date: Feb. 26, 2009

Pilz et al.

(54) **FIRE-RATED WALL CONSTRUCTION PRODUCT**

(75) Inventors: **Don A. Pilz**, Livermore, CA (US); **Raymond E. Poliquin**, City of Industry, CA (US); **Fernando Hernandez Sesma**, City of Industry, CA (US)

Correspondence Address:
KNOBBE MARTENS OLSON & BEAR LLP
2040 MAIN STREET, FOURTEENTH FLOOR
IRVINE, CA 92614 (US)

(73) Assignee: **California Expanded Metal Products Company**, City of Industry, CA (US)

(21) Appl. No.: **12/196,115**

(22) Filed: **Aug. 21, 2008**

Related U.S. Application Data

(63) Continuation-in-part of application No. 12/013,361, filed on Jan. 11, 2008.

(60) Provisional application No. 60/957,434, filed on Aug. 22, 2007.

Publication Classification

(51) **Int. Cl.**
E04C 2/34 (2006.01)

(52) **U.S. Cl.** **52/481.1**

(57) **ABSTRACT**

The present application is directed toward fire-rated wall construction components and wall systems for use in building construction. Embodiments can include tracks for holding studs which incorporate various geometries capable of receiving fire-retardant material, flat straps for use between tracks and fluted wall components, fire sponges for use in fluted wall components, and tracks with protruding grooves or other structures which prevent unwanted air movement between a wallboard component and the track.

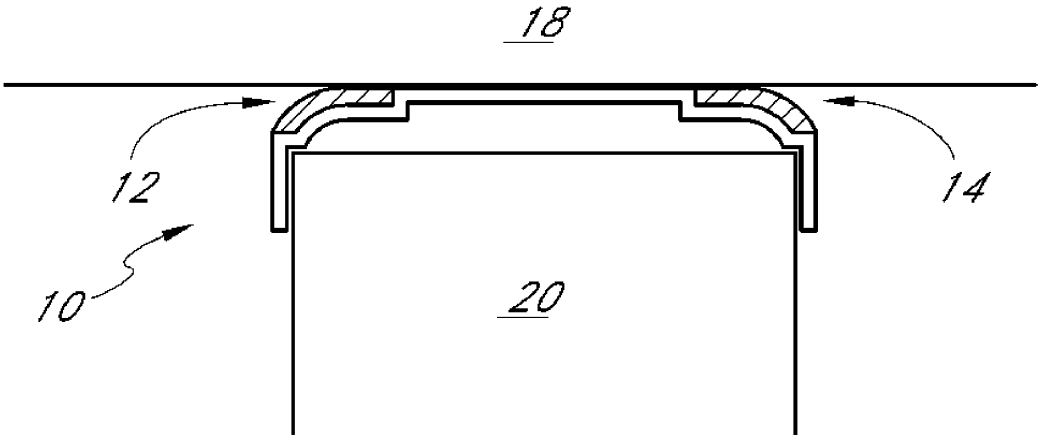

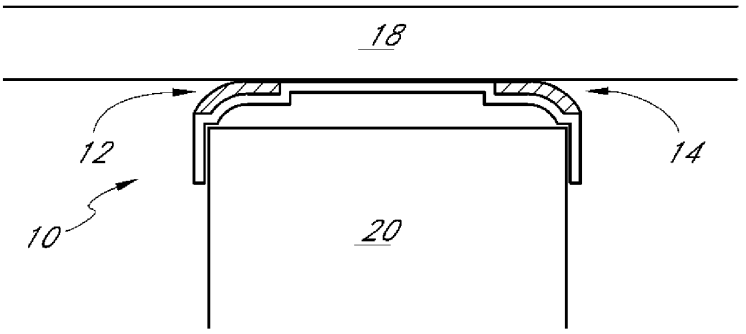

FIG. 1

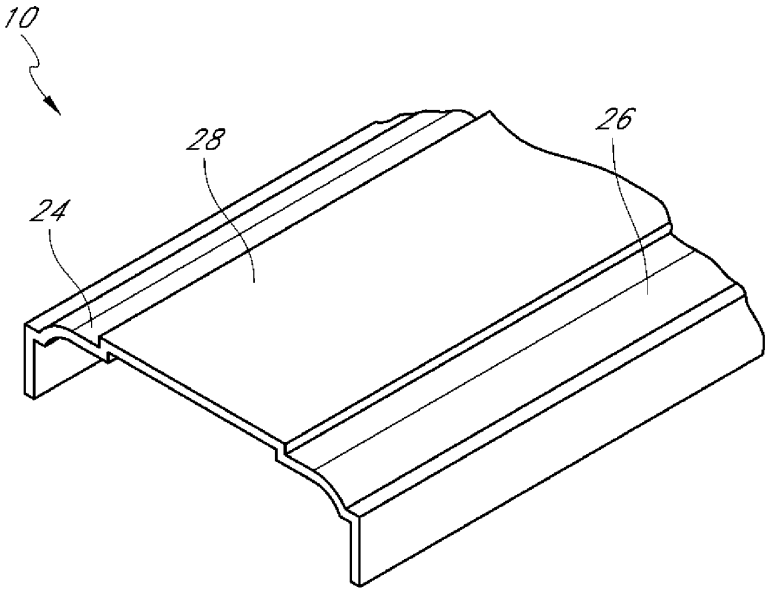

FIG. 2

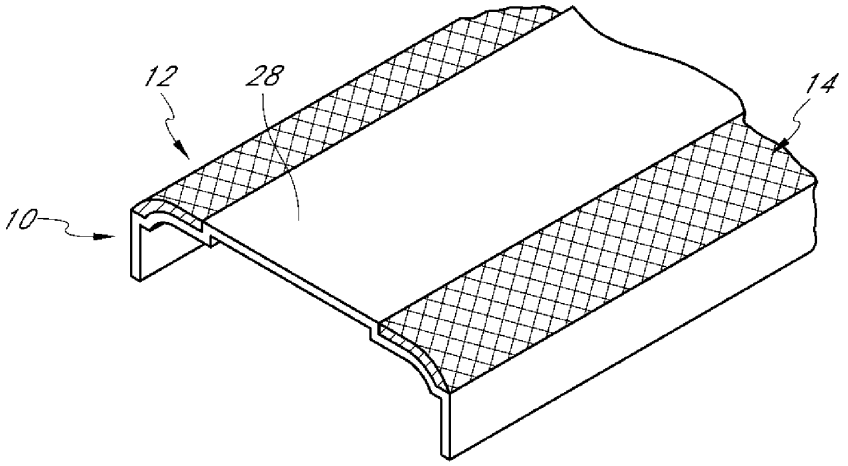

FIG. 3

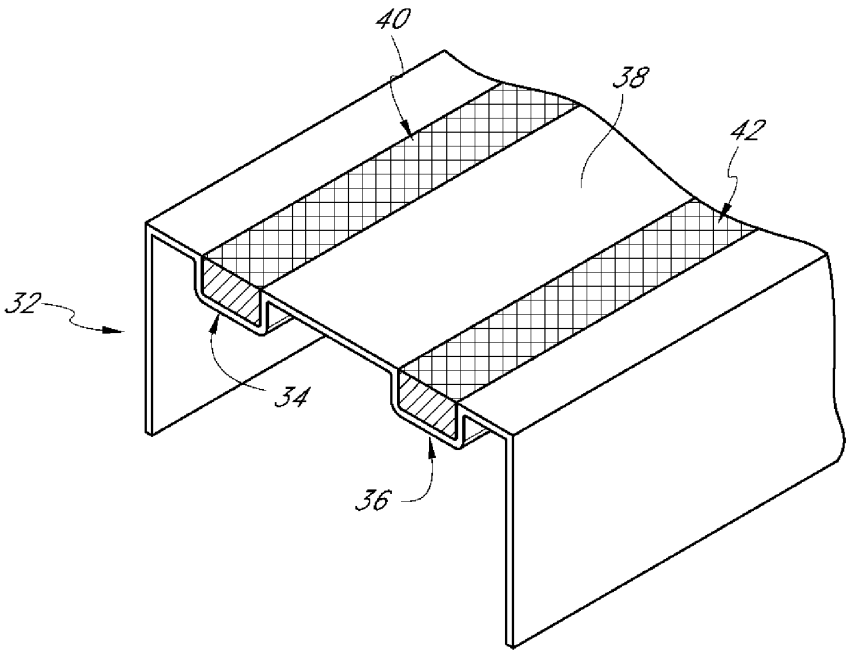

FIG. 4

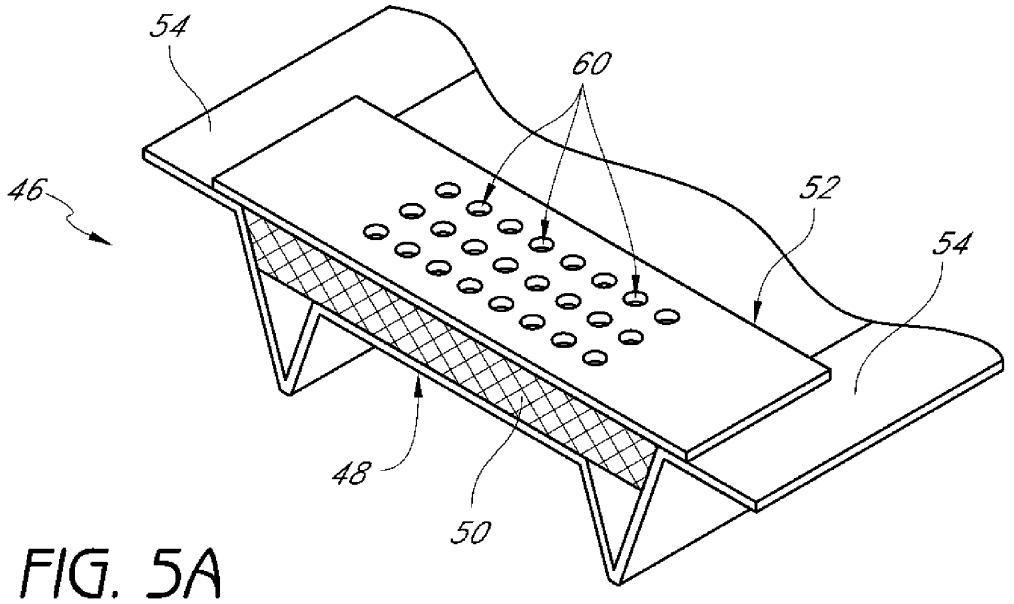

FIG. 5A

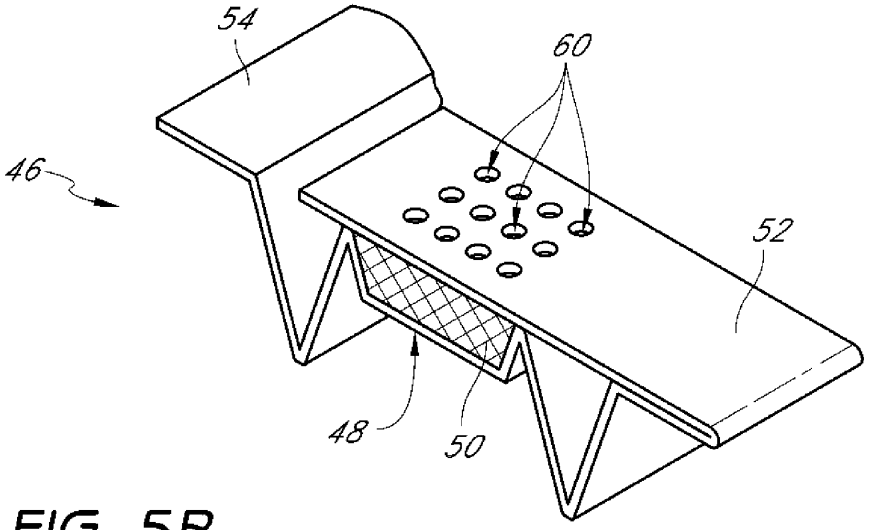

FIG. 5B

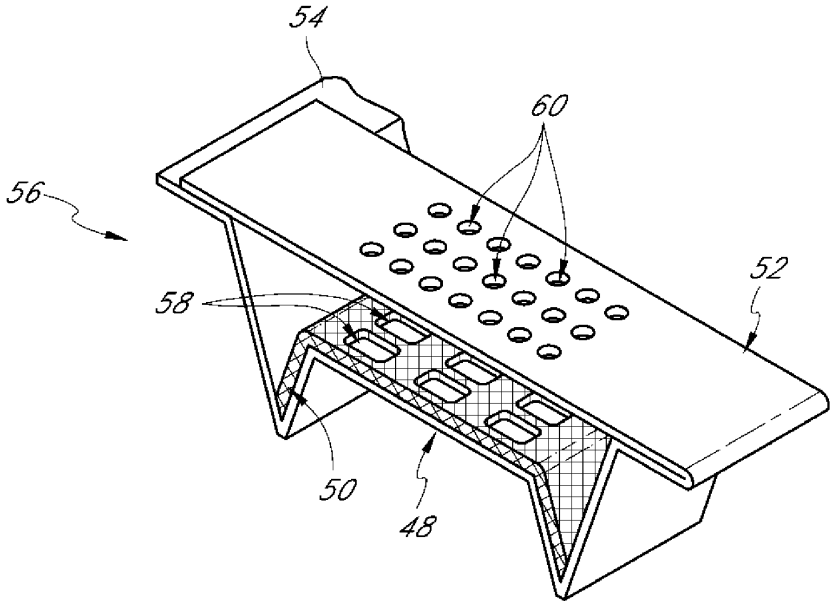

FIG. 6A

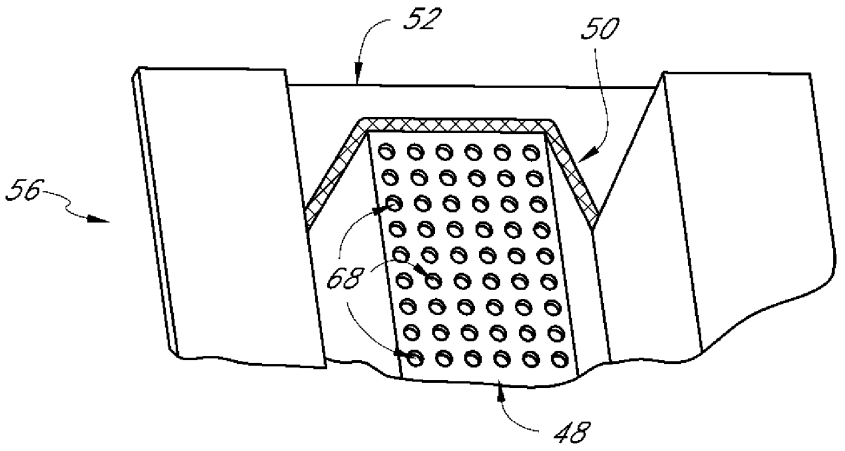

FIG. 6B

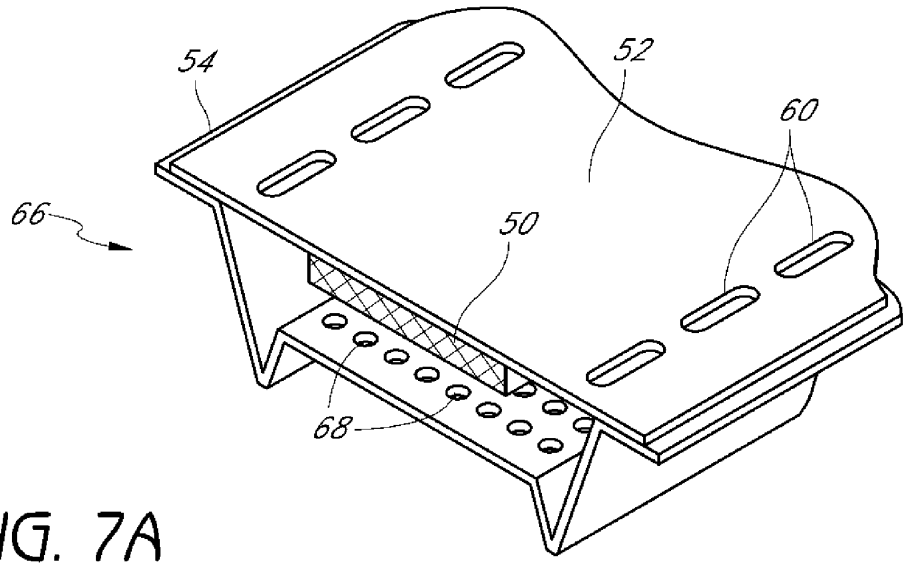

FIG. 7A

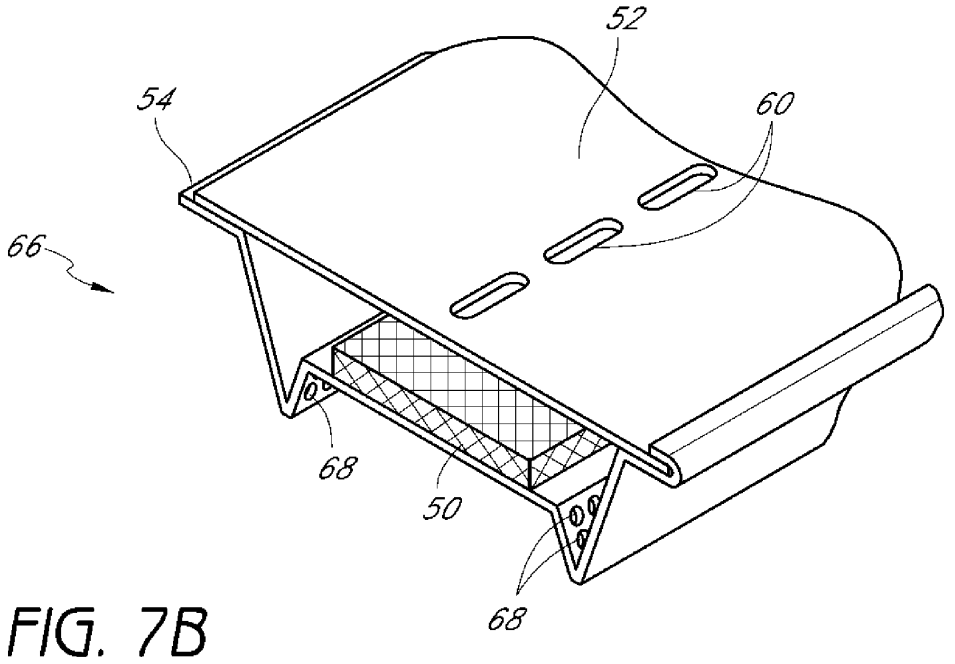

FIG. 7B

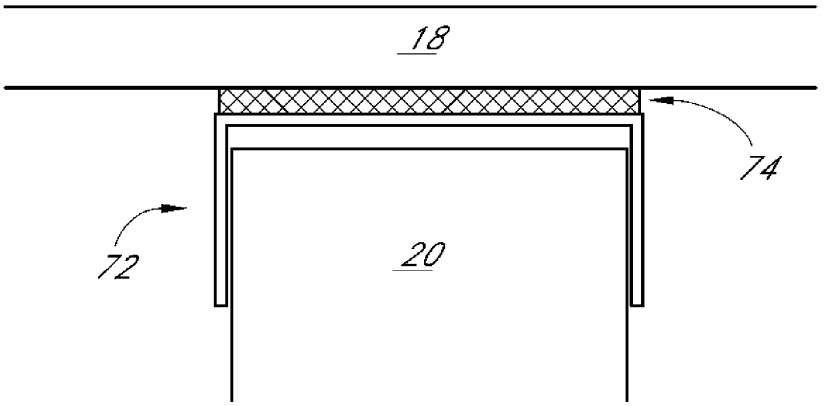

FIG. 8

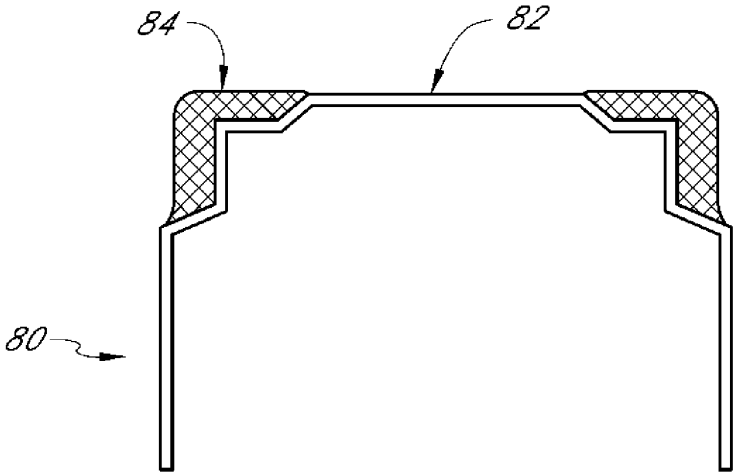

FIG. 9

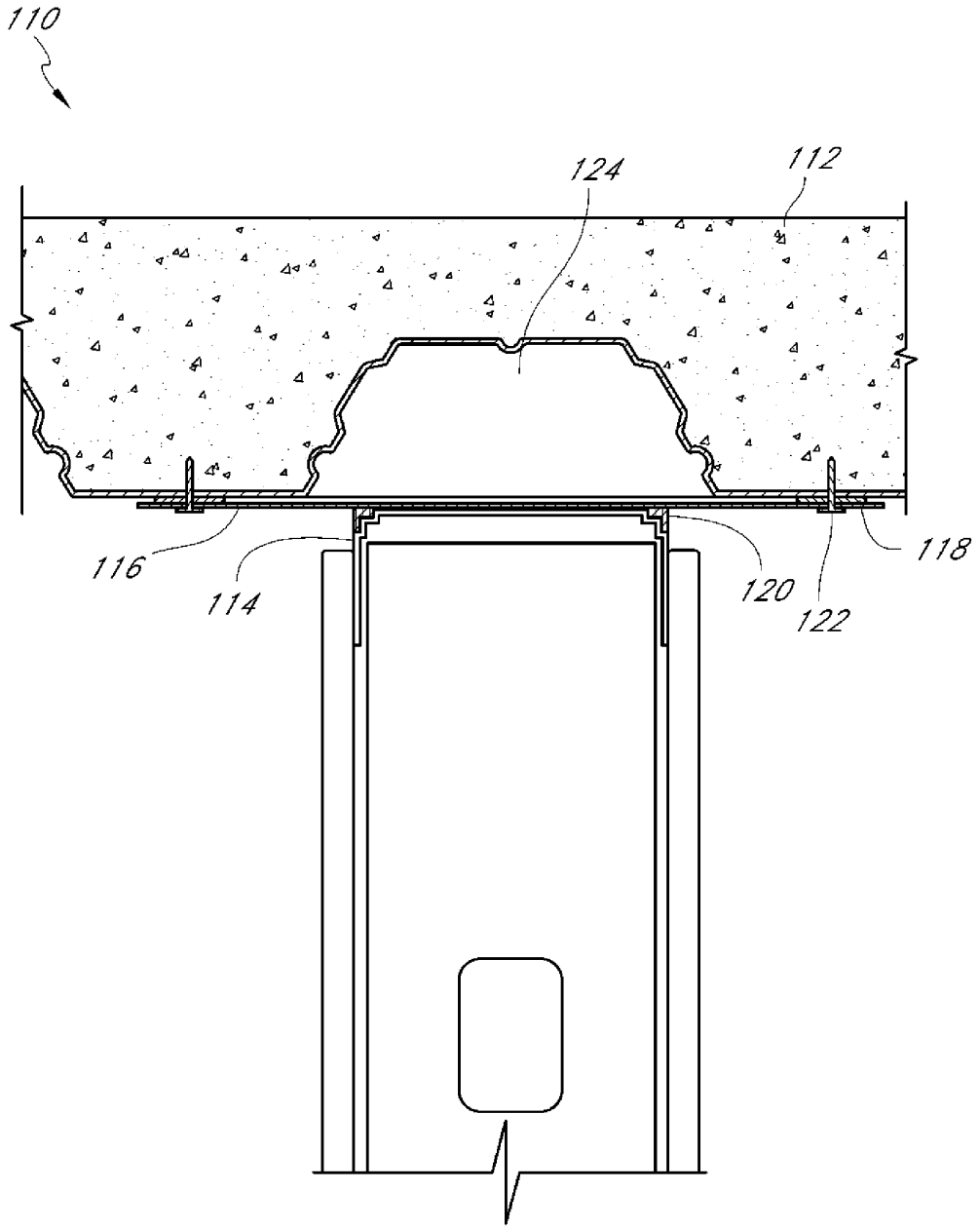

FIG. 10A

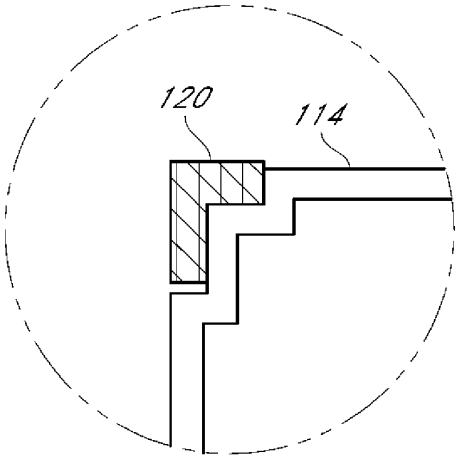

FIG. 10B

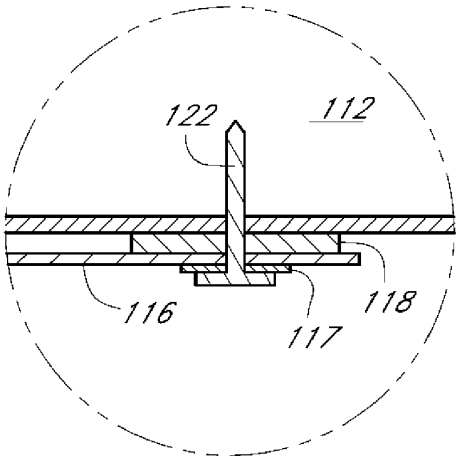

FIG. 10C

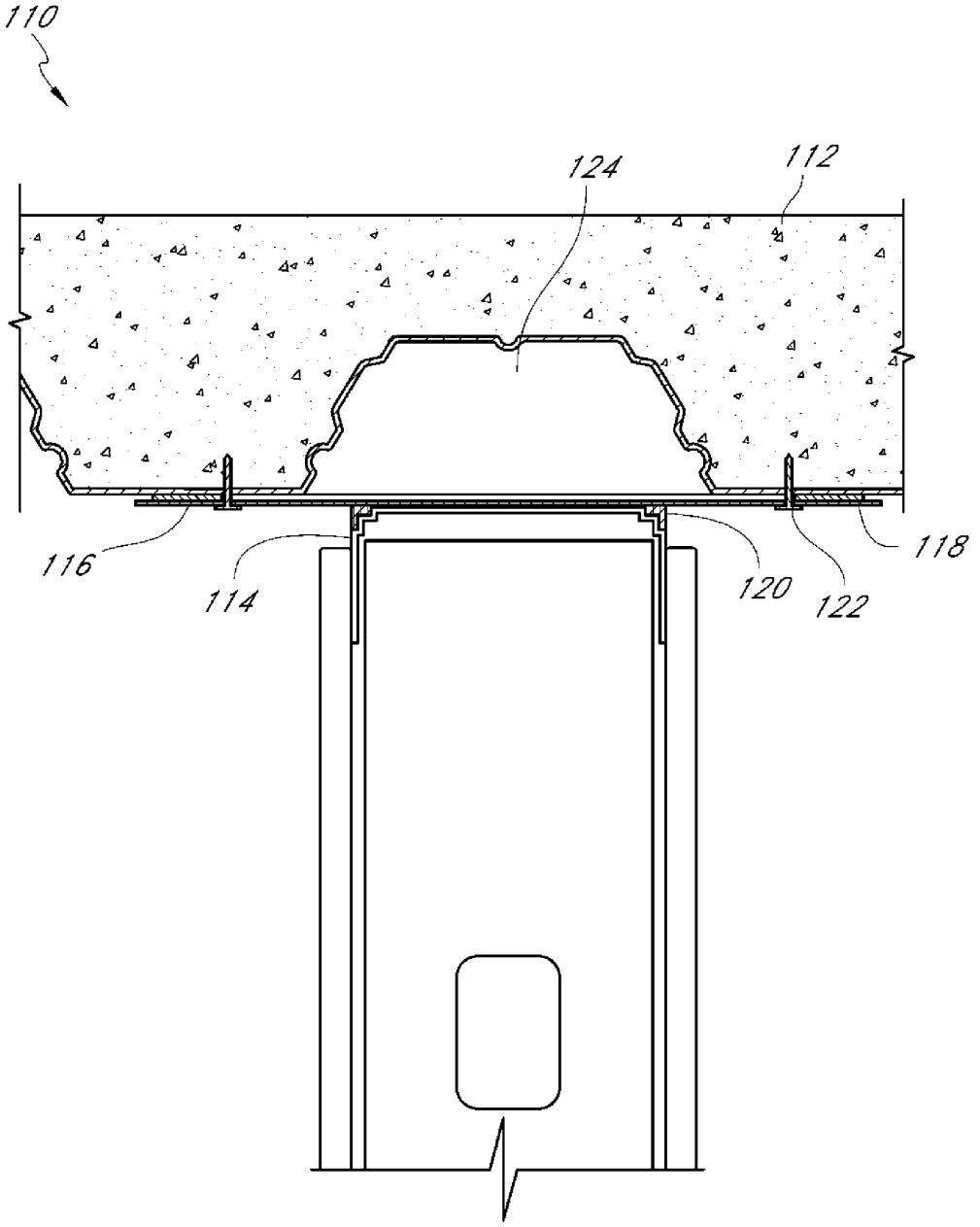

FIG. 10D

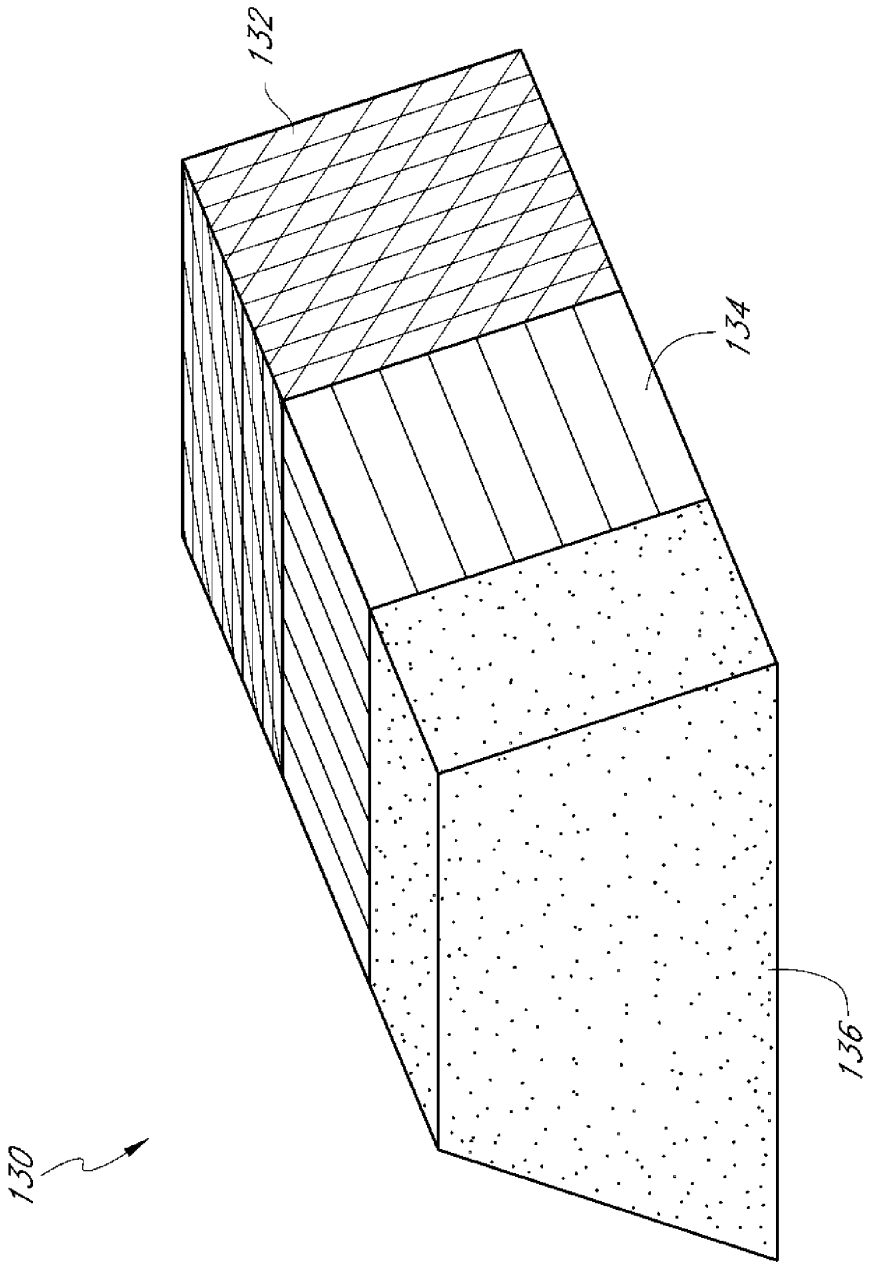

FIG. 11

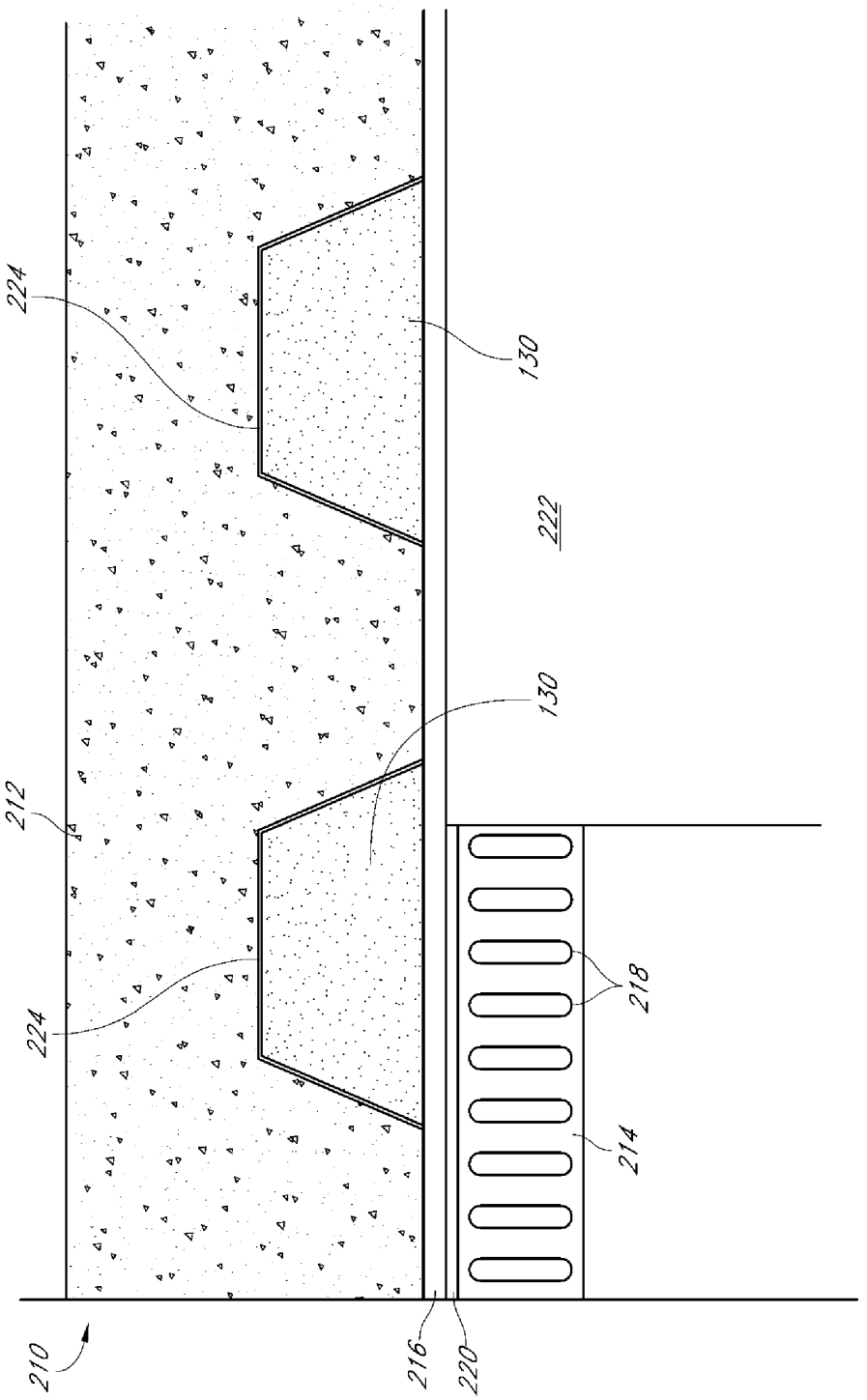

FIG. 12A

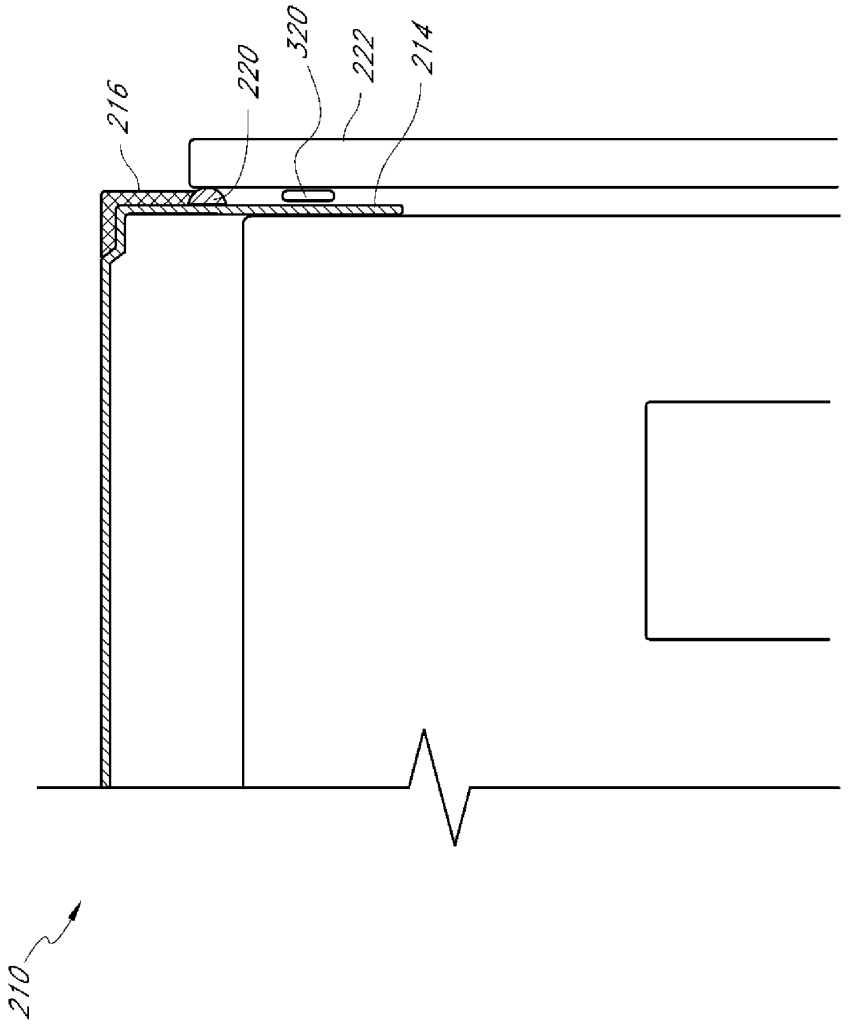

FIG. 12B

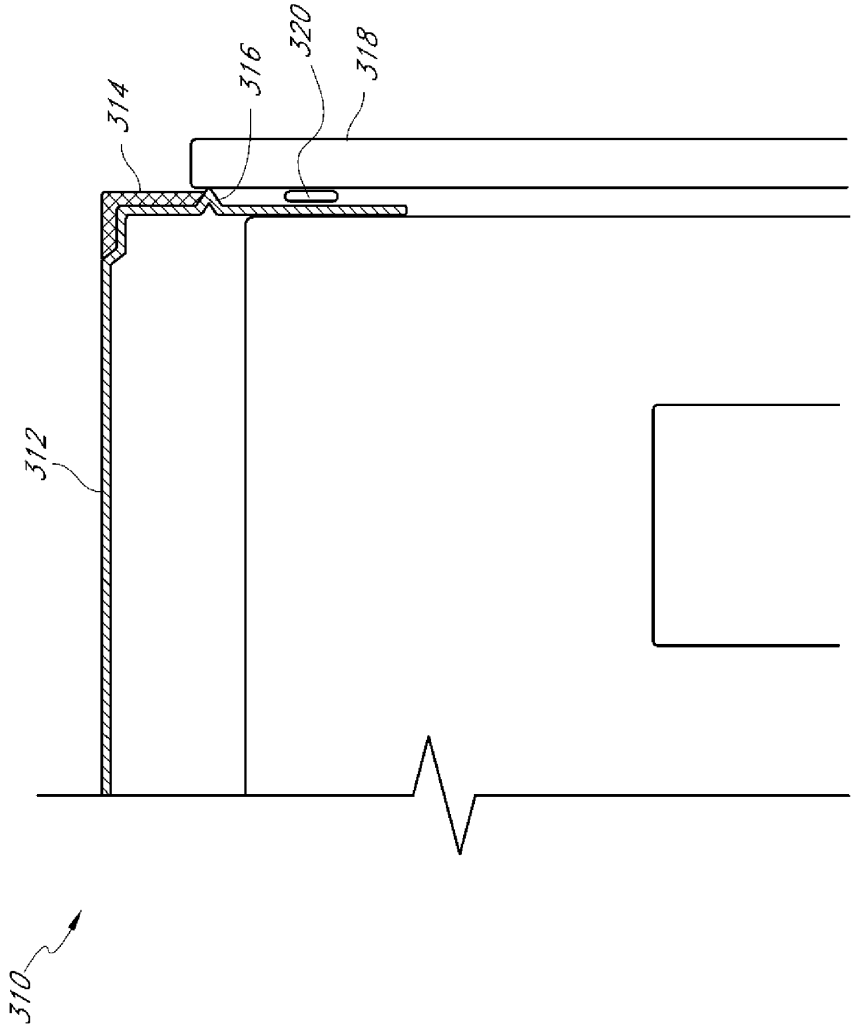

FIG. 13

FIRE-RATED WALL CONSTRUCTION PRODUCT

RELATED APPLICATIONS

[0001] This application is a continuation-in-part of U.S. patent application Ser. No. 12/013,361, filed Jan. 11, 2008, which is incorporated in its entirety by reference herein, and which claims benefit under 35 U.S.C. § 119(e) to U.S. Provisional Patent Application No. 60/957,434, filed Aug. 22, 2007, which is incorporated in its entirety by reference herein.

BACKGROUND OF THE INVENTION

[0002] 1. Field of the Invention

[0003] This application is directed toward fire-rated wall construction components for use in building construction.

[0004] 2. Description of the Related Art

[0005] Fire-rated wall construction components and assemblies are commonly used in the construction industry. These components and assemblies are aimed at preventing fire, heat, and smoke from leaving one portion of a building or room and entering another, usually through vents, joints in walls, or other openings. The components often incorporate the use of a fire-retardant material which substantially blocks the path of the fire, heat, and smoke for at least some period of time. Intumescent materials work well for this purpose, since they swell and char when exposed to flames, helping to create a barrier to the fire, heat, and smoke.

[0006] One example of a fire-rated wall construction component is the Firestik™ design. The Firestik™ design incorporates a metal profile with a layer of intumescent material on its inner surface. The metal profile of the Firestik™ design is independently and rigidly attached to a wall component, such as the bottom of a floor or ceiling, and placed adjacent to other wall components, such as a stud and track. The intumescent material, which is adhered to the inner surface of the metal profile, faces the stud and track, and the space created in between the intumescent material and the stud and track allows for independent vertical movement of the stud in the track when no fire is present.

[0007] When temperatures rise, the intumescent material on the Firestik™ product expands rapidly. This expansion creates a barrier which encompasses, or surrounds the stud and track and substantially prevents fire, heat, and smoke from moving through the spaces around the stud and track and entering an adjacent room for at least some period of time.

[0008] While the Firestik™ design serves to prevent fire, heat, and smoke from moving through wall joint openings, it also requires independent attachment and proper spacing from wall components. It would be ideal to have wall components and systems which themselves already incorporate a fire-retardant material.

[0009] An additional problem regarding current fire-rated wall components concerns ventilation. Exterior soffits for balconies or walkways are required to be fire rated. However, these soffits need to be vented to prevent the framing members from rotting. The rot is caused when airflow is taken away and condensation forms inside the framing cavity. The moisture from the condensation attacks the framing members and destroys them from the inside out. In many cases, the deterioration is not noticed until the framing is completely destroyed. Therefore, a fire-rated wall component is needed which accommodates proper ventilation during times when no fire or elevated heat is present, and seals itself when fire or elevated heat is present.

SUMMARY OF THE INVENTION

[0010] The present application is directed toward fire-rated wall construction components and systems for use in building construction. The term "wall," as used herein, is a broad term, and is used in accordance with its ordinary meaning. The term may include, but is not limited to, vertical walls, ceilings, and floors. It is an object of the application to provide wall components and systems which have fire-retardant characteristics. It is also an object of the application to provide wall components and systems which allow for needed ventilation during times when no fire or elevated heat is present.

[0011] To achieve some or all of these objects, an embodiment of a wall system is provided that takes two separate components, a wall component and intumescent material, and combines the two for use in building construction. The embodiment includes at least one surface on a wall component capable of accepting intumescent material. In some embodiments, the outer surface of the intumescent material sits flush with a second surface of the wall component. This allows the wall component to retain its general shape and geometry without creating unwanted edges, protrusions, or uneven shapes. It also removes the need for a separate product or wall component to be installed outside or adjacent to a stud or track. In other arrangements, it may be desirable for the outer surface of the intumescent material to extend above the second surface of the wall component to, for example, facilitate contact between the intumescent material and another component or surface. In some arrangements, it may be desirable for the outer surface of the intumescent material to be positioned below the second surface of the wall component.

[0012] In an embodiment which resembles a vent or ventilation system, the intumescent material is positioned within an interior space of a vent. The vent may include first and second components, each including vent holes. In some arrangements, the intumescent material may include a set of holes, especially when the intumescent material is covering vent holes of the vent component(s). The term "holes," as used herein, is a broad term, and is used in accordance with its ordinary meaning. The term includes, but is not limited to, holes, mesh, and slots. When the vent is in use, the holes in the vent surface (and, in some arrangements, the holes in the intumescent material) allow for continuous air flow through the vent. If provided, the holes in the intumescent material and the holes in the vent surface need not match up co-axially, as long as air flow is permitted. In some embodiments, the holes in the intumescent material may line up co-axially with the holes in the vent surface. Additionally, in some embodiments a flat strap may define a portion of the vent and may sit above the intumescent material. The flat strap may be a discrete piece attached separately, or may already be an integral part of the vent itself. The flat strap has its own set of holes which, when in use, allow for continuous air flow through the vent. In some embodiments the holes may be aligned co-axially with both the holes in the vent surface and the holes in the intumescent material. By having holes in both the vent and strap, air can flow through the vent, intumescent material (in some embodiments), and strap during times when there is no fire or elevated heat. When the temperature rises, however, the intumescent material will expand quickly and block air pathways. In this manner, the entire vent will be sealed, substan-

tially preventing fire, heat, and smoke from reaching other rooms or parts of the building for at least some period of time. The intumescent material may be a strip of material that can be handled separately from the vent, or may be a layer of material applied to the vent (e.g., sprayed or painted onto the vent), among other possibilities.

[0013] In yet another embodiment, a wall system is provided which comprises a first wall component, a second wall component, a flat strap of material attached to the first wall component, and a strip of fire-retardant material located on the flat strap.

[0014] In yet another embodiment, a wall system is provided which comprises a deck with a flute, a wall generally aligned along the length of the flute, a flat strap located between the deck and the wall and attached to the deck, and a pair of fire-retardant material strips, one on either side of the flute, located on the flat strap between the flat strap and the deck.

[0015] In yet another embodiment, a pre-formed fire-retardant sponge is provided for use in a flute of a fluted deck, the sponge comprising a body having substantially the same shape as the shape of a flute of a fluted deck, the body being formed of compressible material and having at least one layer of fire-retardant material, and the body having an uncompressed size larger than that of the size of the flute.

[0016] In yet another embodiment, a fire-retardant wall system is provided comprising a track for receiving wall studs, the track comprising a web and flange, the track further comprising at least one surface for accepting fire-retardant material thereon, the at least one surface configured such that when the track is attached to a deck, the fire-retardant material can expand and seal any gaps present between the track and the deck when the fire-retardant material is exposed to elevated heat. The system further comprises at least one wall stud received within the track, at least one piece of drywall attached to the at least one wall stud, and an elongate protrusion or sealing element located along the flange.

[0017] In yet another embodiment, a fire-retardant wall system is provided comprising a track for receiving wall studs, the track comprising a web and flange, the track further comprising at least one surface for accepting fire-retardant material thereon, the at least one surface configured such that when the track is attached to a deck, the fire-retardant material can expand and seal any gaps present between the track and the deck when the fire-retardant material is exposed to elevated heat. The system further comprises fire-retardant material attached to the at least one surface of the track, the fire-retardant material being located along at least a portion of the flange, at least one wall stud received within the track, at least one piece of drywall attached to the at least one wall stud, and an elongate protrusion located along the flange between a free end of the flange and an edge of the fire-retardant material.

[0018] Additional embodiments involve individual components of the systems described above, such as the individual flat straps, tracks or vent components, for example. In addition, embodiments of the present invention include methods of manufacturing the wall systems, vents or vent systems described above. Furthermore, other embodiments involve methods of assembling the wall systems, vents or vent systems described above.

BRIEF DESCRIPTION OF THE DRAWINGS

[0019] These and other features, aspects and advantages of the various devices, systems and methods presented herein are described with reference to drawings of certain embodiments, which are intended to illustrate, but not to limit, such devices, systems, and methods. The drawings include thirteen (13) figures. It is to be understood that the attached drawings are for the purpose of illustrating concepts of the embodiments discussed herein and may not be to scale.

[0020] FIG. **1** illustrates a cross-sectional view of an embodiment of a fire-rated wall component connected to a floor and stud element.

[0021] FIG. **2** illustrates a perspective view of an embodiment of a fire-rated wall component with arcuate or curved portions.

[0022] FIG. **3** illustrates a perspective view of an embodiment of a fire-rated wall component with arcuate portions, including intumescent material.

[0023] FIG. **4** illustrates a perspective view of an embodiment of a fire-rated wall component with channels or slots and intumescent material in the slots.

[0024] FIGS. **5**A and **5**B illustrate perspective views of embodiments of a fire-rated wall component including holes for ventilation.

[0025] FIGS. **6**A and **6**B illustrate perspective views of an embodiment of a fire-rated wall component including holes for ventilation.

[0026] FIGS. **7**A and **7**B illustrate perspective views of an embodiment of a fire-rated wall component including holes for ventilation.

[0027] FIG. **8** illustrates a cross-sectional view of an embodiment of a fire-rated wall component with intumescent material on its top surface.

[0028] FIG. **9** illustrates a cross-sectional view of an embodiment of a fire-rated wall component with intumescent material on both its top and side surfaces.

[0029] FIG. **10**A illustrates a cross-sectional view of an embodiment of a wall system with a flat strap.

[0030] FIG. **10**B illustrates a cross-sectional view of the track portion of the embodiment of FIG. **10**A prior to installation.

[0031] FIG. **10**C illustrates a cross-sectional view of a portion of the embodiment of FIG. **10**A.

[0032] FIG. **10**D illustrates the embodiment of **10**A, except with the fasteners moved in.

[0033] FIG. **11** illustrates a perspective view of an embodiment of a fire sponge.

[0034] FIG. **12**A illustrates a cross-sectional view of an embodiment of a wall system which incorporates the fire sponge of FIG. **11**.

[0035] FIG. **12**B illustrates a cross-sectional view of a portion of the embodiment of the wall system of FIG. **12**A.

[0036] FIG. **13** illustrates a cross-sectional view of an embodiment of a wall system with a protruding groove to inhibit movement of air.

DETAILED DESCRIPTION OF THE PREFERRED EMBODIMENTS

[0037] The preferred embodiments of the present invention are directed toward fire-rated wall construction components and systems for use in building construction. Fire-rated wall construction components and assemblies are commonly used in the construction industry. These components and assemblies are aimed at preventing fire, heat, and smoke from leaving one portion of a building or room and entering another, usually through vents, joints in walls, or other openings. The components and assemblies often incorporate the

use of some sort of fire-retardant material, such as intumescent material, which substantially blocks the path of the fire, heat, and smoke for at least some period of time.

[0038] FIG. **1** illustrates a cross-sectional view of an embodiment of a fire-rated wall component **10** connected to a floor or ceiling element **18** and stud element **20**. The wall component **10** is used as a track for holding a stud within a vertical wall, and may include slots along its sides. The slots provide areas to accommodate fasteners for connection with the studs and allow for vertical movement of the attached studs during an earthquake or some other event where vertical movement of the studs is desired.

[0039] As can be seen in FIG. **2**, wall component or header track **10** has both a flat top surface **28** and two arcuate surfaces **24** and **26**. Top surface **28** is flat for ease of attachment to the bottom surface of a floor or ceiling **18**. The two arcuate surfaces **24** and **26** are designed to receive intumescent material. The arcuate nature of the surfaces **24** and **26** can encourage the intumescent material, in at least some embodiments, to expand in a more radial direction from the top of the wall component **10** when subjected to elevated levels of heat, thereby filling in a larger area between and alongside the header track and floor **18**. In other embodiments, the surfaces **24**, **26** can have other shapes or configurations.

[0040] The intumescent material, identified as **12** and **14** in FIGS. **1** and **3**, is bonded to arcuate surfaces **24** and **26**. The term "bonded," as used herein, is a broad term, and is used in accordance with its ordinary meaning. The term includes, but is not limited to, mechanically bonded or bonded using adhesive. In some embodiments, when the intumescent material is bonded, an outer surface of the intumescent material will be flush with top surface **28**. This allows top surface **28** to remain flush, or at least partially flush, with the bottom of floor element **18**, and may aid in the installation of wall component **10** to a floor or ceiling. This flush attachment additionally allows the wall component **10** to retain a fluid or smooth-shaped geometry free of added edges, overlaps, or protrusions. In doing so, the area of contact between the intumescent material and the floor element **18** can inhibit air and sound from moving past the header track **10**. In other arrangements, it may be desirable for the outer surface of the intumescent material to extend above the top surface **28** to, for example, ensure contact between the intumescent material and the floor element **18**. In some arrangements, it may be desirable for the outer surface of the intumescent material to be positioned below the second surface of the wall component.

[0041] By incorporating intumescent material onto a wall component such as a track for studs in the manner shown, it becomes unnecessary to use or attach additional features or devices to the wall component. Instead, when the temperature rises near the wall component **10**, the intumescent material **12** and/or **14** will heat up. At some point when the intumescent material becomes hot enough, it will quickly expand to multiple times its original volume. This intumescent material will expand towards the floor or ceiling element **18** and outwards toward any open space. This helps to substantially prevent fire, heat, and smoke from moving past, through, or around wall component **10** and stud **20** for at least some period of time.

[0042] FIG. **4** illustrates another embodiment of a fire-rated wall component **32**. In this embodiment, the wall component **32** again takes the form of a track member for use in holding studs in place within a vertical wall. However, here the wall component **32** has two slots or channels, shown as **34** and **36**, wherein the intumescent material **40** and **42** is attached. As can be seen in the drawing, the top surface layers of intumescent material **40** and **42** are flush with the top surface **38** of wall component **32**. This allows the top surface **38** of wall component **32** to maintain a smooth geometry, which may aid in the installation of wall component **32** to a floor, ceiling or intersecting wall. This flush attachment additionally allows the wall component **10** to retain a fluid or smooth-shaped geometry free of added edges, overlaps, or protrusions. However, a flush attachment as described above is not essential to the success of the present invention.

[0043] It is possible that more than two slots could be used in the type of embodiment shown in FIG. **4**, or even as few as one. The purpose of having the intumescent material located in the slots **34** and **36** is to create fire protection areas. When the intumescent material **40** and **42** becomes hot, it will expand rapidly into the open areas around it. Much as in the embodiment shown in FIGS. **1-3**, this expansion will help to create a barrier, or seal, substantially preventing fire, heat, and smoke from moving from one area of a building to another for at least some period of time.

[0044] FIGS. **5**A and **5**B illustrate other embodiments of a fire-rated wall component **46**. Here, the wall component takes the form of a soffit vent. The wall component **46** has a lower ventilation area **48** which includes a set or series of ventilation holes. These holes, which are hidden from view in FIGS. **5**A and **5**B, but are shown in FIG. **6**B, allow air and other matter to travel between floors and rooms in a building, or between the outside of a building and the interior of a building.

[0045] As can be seen in FIG. **5**A, a strip of intumescent material **50** is provided within the vent **46** and above ventilation area **48**. The intumescent material **50** may be loosely positioned within the vent **46** or, as illustrated, may be attached adjacent to one or more components of the vent **46**. The top surface of the intumescent material is flush with the top surface **54** of wall component **46**. This allows for easy installation and use of a flat strap **52**, which may be a separate member from the vent **46** or may be integrated with the vent **46**. A flush fit, however, is not essential to the success of the present invention.

[0046] In some arrangements, especially if covering the holes of the ventilation area **48**, the intumescent material **50** may be provided with a series of surfaces defining holes. These holes are hidden from view in FIGS. **5**A and **5**B but are shown in FIG. **6**A. The holes allow air and other matter to continue to travel between floors and rooms in a building, or between the outside of a building and the interior of a building. Flat strap **52** also has a series of holes **60** located in its center area. This series of holes, much like the ventilation and intumescent material holes, allows air and other matter to travel between floors and rooms in a building, or between the outside of a building and the interior of a building.

[0047] The intumescent material **50** may occupy a portion or all of the interior space defined by the vent **46**. In one or more arrangements, the intumescent material **50** occupies only a portion of the interior space to facilitate air flow through the vent **46**. When the intumescent material **50** becomes hot, it will expand to many times its original size into the open areas around it. Much as in the embodiments shown in FIGS. **1-4**, this expansion will help to create a barrier, or seal, inhibiting or at least substantially preventing fire, heat, and smoke from moving from one area of a building to another for at least some period of time.

[0048] FIGS. **6**A and **6**B illustrate another embodiment of a fire-rated wall component **56**. In FIG. **6**A, intumescent material holes **58** are visible, and the intumescent material **50** extends along the sides of vent area **48**. When the intumescent material **50** becomes hot, it expands rapidly, filling much if not all of the space underneath the flat strap **52**. This expansion substantially cuts off at least a substantial amount of air movement through the vent surface **48**, and inhibits or at least substantially prevents fire, heat, and smoke from moving through the vent for at least some period of time. As can be seen in the embodiment in FIG. **6**A, the flat strap **52** is formed as an integral part of the wall component **56**. In other embodiments, the flat strap **52** may be a discrete piece attached separately.

[0049] FIG. **6**B illustrates the bottom view of fire-rated wall component **56**. Here, ventilation holes **68** can be seen in the vent area **48**. The intumescent material **50** is attached to both the vent area **48** and along its extended sides. The intumescent material **50** can be a single piece of material, or can be made up of several pieces. The intumescent material **50** can be secured to the strap **52** or wall component **56** by any suitable means. For example, in one arrangement, the intumescent material **50** includes an adhesive backing, which permits the intumescent material **50** to be secured to the strap **52** or wall component **56**. In an alternative arrangement, the intumescent material **50** may be secured to the strap **52** or wall component **56** by a mechanical fastener, such as a screw or rivet, for example. Other suitable mechanisms or methods may also be used. The intumescent material **50** may be secured to the strap **52** or wall component **56** during the manufacturing process or in the field.

[0050] FIGS. **7**A and **7**B illustrate another embodiment of a fire-rated wall component **66**. With reference to FIG. **7**A, the wall component **66** can include a flat strap **52** with intumescent material **50** attached underneath, such that the intumescent material faces the inside area of the vent. In at least some embodiments the flat strap can comprise 20 gauge sheet metal, and the intumescent material can be about 2 mm thick and about 1¼" wide. Other gauges, sizes, and shapes are also possible. The intumescent material can be attached to the flat strap **52** by various means, including but not limited to adhesive tape and/or mechanical fasteners. The flat strap **52** can be a discrete piece attached separately to the top surface **54**, or can be formed as an integral part of the wall component, as shown in FIG. **6**A. In some embodiments, the flat strap **52** can include expanded metal lathes along either side with slots or holes **60**, and an area in between for attachment of the intumescent material **50**. In some embodiments, the holes **60** can be about ¼" wide and about 1½" wide. Other sizes are also possible.

[0051] With continued reference to FIG. **7**A, the wall component **66** can allow air movement through the vent when the intumescent material **50** has not expanded. The air can move through holes **68** into the open space inside the vent and then out through slots or holes **60**. In at least some embodiments the holes **68** can be about ⅛" in diameter. Other sizes and shapes are also possible. When the intumescent material expands, it can cover up either or both sets of holes **68**, **60**, in order to inhibit fire, heat, and smoke from moving through the vent.

[0052] With reference to FIG. **7**B, in some embodiments the intumescent material can instead be placed on the lower portion of the vent itself as opposed to the bottom of the flat strap **52**. Holes **68** can be located on one or both sides of the intumescent material along the bottom of the vent, and slots or holes **60** can be located along the flat strap **52**. Just as with the embodiment shown in FIG. **7**A, the intumescent material **50** can expand to cover up holes **60** and/or **68** when exposed to elevated levels of heat, inhibiting fire, heat, and smoke from moving through the vent. In at least some embodiments the top of the vent can have at least one end that wraps about the flat strap **52** to help hold it in place, as shown in FIG. **7**B.

[0053] In yet other embodiments, the intumescent material, or other fire-retardant material, can be sprayed or painted onto one or both sides of the bottom of the vent or onto the flat strap. The spray or paint can cover areas which surround the holes **68**. When exposed to heat, the fire-retardant material can expand to cover the holes **68**, thereby inhibiting fire, heat, and smoke from moving through the vent.

[0054] FIG. **8** illustrates another embodiment of a fire-rated wall component **72**. In this embodiment, the wall component **72** is a track for holding a wall stud **20** beneath a ceiling **18**. Here, the intumescent material **74** is attached to the top surface of the wall component **72**. During installation, it is possible to install the wall component **72** and intumescent material **74** to the ceiling **18**. In some embodiments, this may be accomplished by threading a screw through both the wall component and intumescent material. Additionally, in some embodiments the intumescent material may extend down one or both sides of the wall component **72**.

[0055] FIG. **9** illustrates another embodiment of a fire-rated wall component **80**. In this embodiment, the wall component **80** is a track for holding a wall stud. However, here the intumescent material **84** extends both along a portion of the top and side surfaces of the wall component **80**. In particular, intumescent material is provided on the side and top surfaces of each corner portion of the wall component **80**. In some embodiments, an outer surface of the intumescent material **84** may be flush with the top surface **82**. In other embodiments, the intumescent material **84** may extend above the adjacent surfaces of the wall component **80**, or may be positioned below the adjacent surfaces of the wall component **80**.

[0056] With reference to FIG. **10**A, a fire-retardant wall system **110** can comprise a first wall component **112**, a second wall component **114**, a flat strap **116**, and at least one strip of fire-retardant material **118**. In at least some embodiments the first wall component **112** can comprise a fluted deck such as the one illustrated in FIG. **10**A. In yet other embodiments the first wall component **112** can comprise a floor, ceiling, overhang, or any other type of wall component.

[0057] In at least some embodiments the second wall component **114** can comprise a track, or header track, such as the one illustrated in FIG. **10**A, for retaining wall studs. The header track can comprise a slotted header track. In yet other embodiments the second wall component can comprise a different type of track or wall component.

[0058] With reference to FIGS. **10**A and **10**B, the second wall component **114** can include at least one gasket **120**. The gasket **120** can itself comprise a strip of fire-retardant material, including but not limited to intumescent material. In at least some embodiments, the gasket **120** can be adhered to a surface of the second wall component **114** such that when the second wall component is attached to, pressed, and/or placed against the fire strap **116**, the gasket or gaskets **120** can form a sound and/or air seal, inhibiting sound and/or air from moving from one side of the second wall component **114** to the other. For example, and with reference to FIG. **10**B, in at least some embodiments the gasket can be adhered to the

second wall component **114** such that a portion of it protrudes and/or extends past an adjacent edge of the second wall component **114**. When the second wall component **114** is pressed against and/or attached to the flat strap **116** or other wall component, the portion of the gasket protruding past the edge can be compressed down towards the adjacent edge of the wall component **114** in order to form a seal between the flat strap **116** and second wall component **114**. As described above, this seal and contact can inhibit air and sound from moving past the second wall component **114**.

[0059] The flat strap **116** can be attached to the first wall component, the second wall component, or both the first and second wall components. For example, and as illustrated in FIG. **10**A, the flat strap **116** can be attached via fasteners **122** to the first wall component **112**. In at least some embodiments, the flat strap **116** can comprise an about 6"-8" wide **20** gauge flat strap. The flat strap **116** can be used to cover a portion or all of one or more flutes **124** of the fluted deck **112**, FIG. **10**A showing a cross-section of the flute **124**. Thus, the flat strap **116** provides a surface for the second wall component **114** to contact when the wall component **114** is generally aligned with the length of the flute **124**, or when the wall component **114** extends generally alongside and underneath the length of the flute **124** as shown in FIG. **10**A. In other embodiments a portion or portions of the wall component **114** can be aligned with a portion of the fluted deck that does not include the flute **124**.

[0060] With reference to FIGS. **10**A-**10**D, the strip of fire-retardant material **118** can comprise intumescent material, which expands when subjected to elevated levels of heat, or can comprise other types of fire retardant material. In some embodiments an about ½" thick strip of material can be used. Other thicknesses are also possible.

[0061] In at least some embodiments, and with reference to FIG. **10**C, the strip of fire-retardant material **118** can be adhered to the flat strap so that it rests between the flat strap **116** and first wall component **112**. In at least some embodiments, the fire-retardant system **110** can include two or more strips of fire-retardant material **118**. In some embodiments, the strips of fire-retardant material **118** can be located approximately ¼" in from the ends of the flat strap **116**. For example, and with reference to FIG. **10**A, the system **110** can include one strip of fire-retardant material **118** located on each side of the second wall component **114** and on each side of the flute **124**.

[0062] In at least some embodiments, and with reference to FIGS. **10**A and **10**C, the strip of fire-retardant material **118** can include a preformed fastener hole for insertion of the fastener **122**. The fastener **122** can be fastened through the fire-retardant material **118**. A washer **117** can be used between a head of the fastener **122** and the flat strap **116** to help secure the flat strap **116**. The fastener **122** can help to secure the fire-retardant material in place. In other embodiments, and with reference to FIG. **10**D, the fastener **122** can be located adjacent or inside of the fire-retardant material **118** along the flat strap **116**.

[0063] In some embodiments, the fasteners **122** can be located every 12" on center along the length of the flat strap. In order to locate the areas for attachment, in at least some embodiments, the flat strap **116** can include the preformed fastener hole, as described above, or other suitable markings. For example, in some embodiments the flat strap can be indented, scored, or a laser or inkjet (or other suitable) line can be placed along the length of the flat strap **116**, to help locate where the fasteners **122** should be installed through the fire-retardant material and into the wall component **112**.

[0064] With continued reference to FIGS. **10**A-**10**D, the fire-retardant system **110** can inhibit fire, smoke, air, sound, and/or debris from moving from one side of the second wall component **114** to the other (e.g. from one room to another inside a building). The strip or strips of fire-retardant material **118** and/or **120** can act as gaskets, preventing air and/or sound from moving past the system **110**. At the same time, when the strips **118** and/or **120** are exposed to elevated levels of heat, they can expand and fill any gaps left between the flat strap **116** and first and second wall components **112**, **114**.

[0065] The flat strap **116** with fire-retardant material **118** can be used with other systems, decks, tracks, or wall components as well. Thus, it is not limited to use with a fluted wall component and/or header track, as illustrated in FIGS. **10**A-**10**D.

[0066] With reference to FIGS. **11** and **12**, a fire sponge **130** can be used to prevent the spread of fire, heat, and/or debris. The fire sponge **130** can be sized and shaped so that it is custom-made for particular sized and shaped spaces. For example, the fire sponge **130** can be shaped so that it fits snugly into the hollow area or areas of a fluted deck.

[0067] With continued reference to FIG. **11**, the fire sponge **130** can comprise an inner layer of material **132**, such as for example mineral wool. The inner layer **132** can be compressible, so that the entire sponge **130** can be compressed into an area smaller than the volume of the fire sponge **130** itself. The fire sponge **130** can further comprise another layer of material **134** outside of the inner layer **132**. In some arrangements, the layer of material **134** can be the outermost layer, and in other arrangements can be an intermediate layer. In at least some embodiments the layer of material **132** can comprise fire-retardant material, including but not limited to intumescent material. In at least some embodiments, the fire sponge **130** can further comprise an additional outer layer of material **136**, including but not limited to latex smoke seal. In one preferred embodiment, the outer layer of latex smoke seal can range between 1/16"-⅛" in thickness. This outer layer of latex smoke seal can give the fire sponge **130** a flexible, yet durable shape. For example, the latex can prevent wear and tear during shipping and/or installation, and can also prevent smoke from moving through the fire sponge **130**.

[0068] With reference to FIGS. **11** and **12**A, the custom-made and pre-shaped fire sponges **130** can be made to have a trapezoidal cross-section so as to fit into the generally trapezoidal-shaped flutes commonly found in decks. In at least some embodiments, the trapezoidal-shaped fire sponge **130** can have widths which are larger than the widths of the flute. Other shapes and geometries are also possible. In some embodiments, the fire sponge **130** can be made at least in part of a compressible material, and its initial manufactured size can be larger than that of the flute **124**. This allows the sponge **130** to be compressed to fit inside the flute **124**, and once inside to expand and hold itself in place. For example, in at least one embodiment, the fire sponge **130** can be made to compress by approximately 30% of its initial volume to fit inside the flute **124**. Other percentages and/or ranges of percentages are also possible.

[0069] Custom-made and pre-shaped fire sponges can reduce the amount of time required for fire-proofing the interior of a building, particularly if the size of the fluted wall components is known. For example, instead of placing or stuffing numerous, similar-shaped fire blocks or material into

a hollow area and then using an airless sprayer to spray latex smoke sealer, a single custom-shaped fire sponge as described above can be used.

[0070] With continued reference to FIG. **12**A, a fire-retardant wall system **210** can include a first fluted wall component **212** and a second, attached wall component **214**. In at least some embodiments the first fluted wall component **212** can comprise a fluted deck, and can include hollow areas for insertion of a fire sponge or sponges **130**. In at least some embodiments, the sponges **130** can be inserted after the second wall component **214** has been attached to the fluted wall component **212**.

[0071] With reference to FIGS. **12**A and **12**B, in at least some embodiments the second wall component **214** can comprise a header track, which may be slotted or unslotted. In some embodiments the track can have a U-shape. In other embodiments it can have a J-shape. Other shapes are also possible. In at least some embodiments the track can be used for shaft areas in buildings, including but not limited to elevator shafts. In such arrangements, the structures for sealing with wallboard members described below may be provided on only one side of the track because the shaft side typically does not include wallboard.

[0072] With continued reference to FIGS. **12**A and **12**B, the illustrated header track is slotted and can comprise a strip or strips of fire-retardant material **216**, including but not limited to intumescent material, along at least one flange. The strip of fire-retardant material **216** can be located along an area of the flange adjacent and/or proximal to the series of slots **218** in the flange. As illustrated in FIG. **12**A, the second wall component **214** can extend along the bottom of the fluted wall component **212**, generally perpendicular to the lengths of the flutes **224**.

[0073] The second wall component **214** can further comprise a strip or strips of a sealing element **220** located between the strip **216** and series of slots **218**, and also between the strip **216** and a piece or pieces of an outer wallboard member, such as a sheet of drywall **222**, or other exterior material. The sealing element **220** can be a separate component from the track **214** such as, for example, caulk, foam or tape, and can be used to prevent or inhibit air from moving between the drywall and the second wall component **214**. Alternatively, as described below, the sealing element can be formed by the track itself. For example, and with reference to FIG. **12**B, the sealing element **220** can extend away from the flange and towards the drywall **222** such that the drywall **222** is able to rest against a portion of the sealing element **220**. This configuration can help prevent air from moving between the drywall **222** and the track, while at the same time preventing the drywall from covering up or moving over and interfering with the fire-retardant material **216**.

[0074] With reference to FIG. **13**, other structures or embodiments for preventing unwanted airflow are also possible. For example, a fire-retardant wall system **310** can comprise a slotted or unslotted track **312**. In the illustrated arrangement, the track **312** is slotted. The slotted track **312** can comprise at least one surface for accepting fire-retardant material **314** thereon. The at least one surface can be configured such that when the track is attached to a first wall component, the fire-retardant material **314** can expand and seal a gap between the slotted track **312** and first wall component when the fire-retardant material is exposed to elevated heat. The track **312** can also comprise an elongate protrusion or rib **316** located along at least a portion of one or more of the flanges of the track and proximal the at least one surface, as illustrated in FIG. **13**.

[0075] In at least some embodiments, the elongate protrusion **316** can have a generally v-shaped cross section. Other cross-section shapes are also possible, for example, the protrusion **316** can be generally u-shaped or trapezoidal in shape. The elongate protrusion **316** can act as both a boundary area for the fire-retardant material, as well as a resting and/or attachment location for a piece of drywall **318**, or other exterior material. The drywall can rest and/or remain in contact with the elongate protrusion **316**, thereby blocking air from moving between the drywall **318** and slotted track **312**. At the same time, the elongate protrusion **316** can help prevent the drywall **318** from contacting and/or interfering with the fire-retardant material **314**.

[0076] In some embodiments, the drywall is fastened to a stud within the slotted track **312**. The head portion **320** of the fastener can tend to bow out the drywall, leaving a gap at the top of the drywall to allow air, sound, or debris in general to move between the drywall and the slotted track **312**. The sealing element **220** and/or elongate protrusion **316** can have depths large enough such that even if the drywall is bowed out, the drywall remains in contact with the sealing element **220** and/or elongate protrusion **316**. For example, in some embodiments, the sealing element **220** and/or protrusion **316** can have depths at least equivalent to the depth of the fastener head **320**. As described above, the track can be configured for use in a shaft wall application. In such an arrangement, the track may include fire-retardant material **216** or **314** and the sealing element **220** or protrusion **316** on only one side (i.e., the side opposite the shaft). The flange of the track facing the shaft may be the same or a different length (shorter or longer) than the opposite flange. In some applications, it may be desirable for the shaft flange to be longer than the opposite flange.

[0077] The present application does not seek to limit itself to only those embodiments discussed above. Other embodiments resembling tracks, vents, or other wall components are possible as well. Various geometries and designs may be used in the wall components to accommodate the use of fire-retardant material. Additionally, various materials may be used. In at least some embodiments the wall component and wall system materials can comprise steel, iron, or other material having at least some structural capacity. The fire-retardant materials can comprise intumescent material, such as for example BlazeSeal™, or some other material which accomplishes the same purposes as those described above.

[0078] Although these inventions have been disclosed in the context of certain preferred embodiments and examples, it will be understood by those skilled in the art that the present inventions extend beyond the specifically disclosed embodiments to other alternative embodiments and/or uses of the inventions and obvious modifications and equivalents thereof. In addition, while several variations of the inventions have been shown and described in detail, other modifications, which are within the scope of these inventions, will be readily apparent to those of skill in the art based upon this disclosure. It is also contemplated that various combinations or subcombinations of the specific features and aspects of the embodiments can be made and still fall within the scope of the inventions. It should be understood that various features and aspects of the disclosed embodiments can be combined with or substituted for one another in order to form varying modes

of the disclosed inventions. Thus, it is intended that the scope of at least some of the present inventions herein disclosed should not be limited by the particular disclosed embodiments described above.

What is claimed is:

1. A fire-retardant wall system comprising:

a horizontal deck defining an elongated flute;

a vertical wall generally aligned along a length of the flute;

a flat strap located between the deck and the wall and attached to the deck, the flat strap covering a portion of the flute adjacent the wall; and

a pair of fire-retardant material strips, one on each side of the flute, located on the flat strap between the flat strap and the deck.

2. The fire-retardant wall system of claim **1**, wherein the fire-retardant material is intumescent material configured to expand when exposed to elevated heat.

3. The fire-retardant wall system of claim **1**, wherein the fire-retardant material is pre-attached to the flat strap by an adhesive.

4. The fire-retardant wall system of claim **1**, wherein the flat strap includes a marking along its surface to indicate a proper location for fasteners used to secure the flat strap to the deck.

5. The fire-retardant wall system of claim **1**, wherein the wall comprises a slotted header track for retaining wall studs.

6. The fire-retardant wall system of claim **5**, wherein the slotted header track comprises at least one gasket configured to contact the flat strap to inhibit air and sound from moving between the slotted header track and flat strap.

7. The fire-retardant wall system of claim **6**, wherein the at least one gasket comprises fire-retardant material configured to expand when exposed to elevated heat.

8. The fire-retardant wall system of claim **1**, further comprising a pre-formed fire-retardant sponge for use in the flute, the pre-formed fire-retardant sponge having a cross-sectional shape that is substantially the same as a cross-sectional shape of the flute.

9. A pre-formed fire-retardant sponge for use in a flute of a fluted deck, the sponge comprising:

a body having substantially the same cross-sectional shape as the cross-sectional shape of a flute of a fluted deck, the body being formed of compressible material and having at least one layer of fire-retardant material, the body having an uncompressed size larger than that of the size of the flute.

10. The fire sponge of claim **9**, wherein an inner layer of the body of the fire sponge comprises a mineral wool material.

11. The fire sponge of claim **9**, wherein the at least one layer of fire-retardant material comprises an intumescent material configured to expand when exposed to elevated heat.

12. The fire sponge of claim **9**, further comprising an outer layer of latex smoke sealer between approximately 1/16 and 1/8 of an inch in thickness.

13. The fire sponge of claim **9**, wherein a cross-sectional area of the fire sponge is compressible by at least about 30% to enable the fire sponge to be inserted into the flute of the fluted deck.

14. A method for inhibiting the spread of fire, smoke, and heat in a building comprising:

attaching a header track to a fluted deck, the header track running generally perpendicular to the length of the flutes; and

inserting one of a plurality of preformed sponges into each one of a plurality of spaces defined between the flutes of the fluted deck and the header track, the pre-formed sponges having bodies substantially the same cross-sectional shape as the cross-sectional shape of the spaces, the bodies being formed of compressible material and having at least one layer of fire-retardant material, the bodies having uncompressed sizes larger than that of the sizes of the spaces.

15. The method of claim **14**, wherein the inserting of the preformed sponges comprises compressing the sponges by at least about 30% in order to fit the sponges into the spaces.

16. A fire-retardant vent comprising:

a first vent piece having a plurality of first openings for allowing air flow to pass through the first vent piece;

a second vent piece that cooperates with the first vent piece to define an interior space between the first vent piece and the second vent piece, the second vent piece having a plurality of second openings for allowing air flow through the second vent piece;

a layer of fire-retardant material located with the interior space between the first and second vent pieces and secured to at least one of the first vent piece and the second vent piece;

wherein the layer of fire-retardant material is expandable and is configured to cover at least one of the first and second openings when exposed to elevated levels of heat.

17. The fire-retardant vent of claim **16**, wherein the first vent piece is an upper vent piece and said second vent piece is a lower vent piece with the fire-retardant vent is in use, wherein the layer of fire-retardant material is secured to the upper vent piece.

18. The fire-retardant vent of claim **16**, wherein the first vent piece is an upper vent piece and said second vent piece is a lower vent piece with the fire-retardant vent is in use, wherein the layer of fire-retardant material is secured to the lower vent piece.

19. A fire-retardant wall system comprising:

a plurality of vertical wall studs;

a track for receiving the wall studs and connectable to a deck, the track comprising a web and at least one flange, the flange extending from the web and having a free end opposite the web, the track further comprising at least one surface for accepting a layer of fire-retardant material thereon;

a layer of fire-retardant material attached to the at least one surface on the track, the fire-retardant material configured to expand when exposed to elevated heat;

at least one piece of wallboard supported by the wall studs, wherein the wallboard covers a portion of the at least one flange; and

a sealing element that extends lengthwise along the flange and is positioned between the layer of fire-retardant material and the free end of the flange;

wherein the wallboard overlaps the sealing element such that the sealing element inhibits air flow between the wallboard and the track, and wherein the layer of fire-retardant material is positioned on the track such that it can seal any gaps present between the track and the deck when it expands in response to exposure to elevated heat.

20. The fire-retardant wall system of claim **19**, wherein the layer of fire-retardant material is located along portions of both the web and the flange.

21. The fire-retardant wall system of claim **19**, wherein the sealing element is a separate component from the track and is secured to the track.

22. The fire-retardant wall system of claim **19**, wherein the sealing element comprises one of caulk, foam and tape.

23. A fire-retardant wall system comprising:

a plurality of vertical wall studs;

a track for receiving the wall studs and connectable to a deck, the track comprising a web and at least one flange, the flange extending from the web and having a free end opposite the web, the track further comprising at least one surface for accepting a layer of fire-retardant material thereon;

a layer of fire-retardant material attached to the at least one surface on the track, the fire-retardant material configured to expand when exposed to elevated heat;

at least one piece of wallboard supported by the wall studs, wherein the wallboard covers a portion of the at least one flange; and

an elongate protrusion that extends lengthwise along the flange and is positioned between the layer of fire-retardant material and the free end of the flange;

wherein the wallboard overlaps the elongate protrusion such that the elongate protrusion inhibits air flow between the wallboard and the track, and wherein the layer of fire-retardant material is positioned on the track such that it can seal any gaps present between the track and the deck when it expands in response to exposure to elevated heat.

24. The fire-retardant wall system of claim **23**, wherein the fire-retardant material is located along portions of both the web and the flange

25. The fire-retardant wall system of claim **23**, wherein the elongate protrusion has a v-shaped cross section.

* * * * *