TRACK IS CANTILEVERED TO FLUTE

- Please read the UL listing HW-D-0872

a) Offset ≤ 0.5" - CFS-TTS MD OS & 600

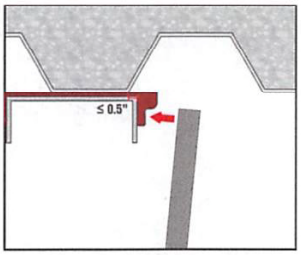

b) Offset 0.5" – 1.5" - CFS-TTS MD OS & 600

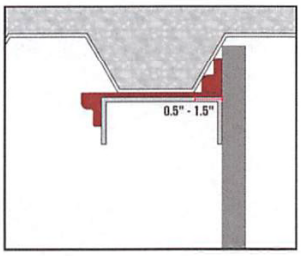

c) Offset > 1.5" - CFS-TTS MD OS & 600 + CFS-TTS MD C

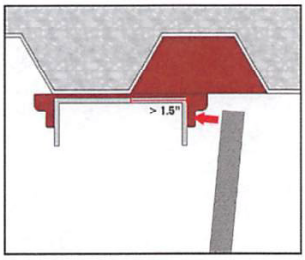

- Install flute cover according to the instructions given in listing (HW-D-0873)

Please note that depending on track width and deck dimensions an offset situation can also occur on both sides of the track.

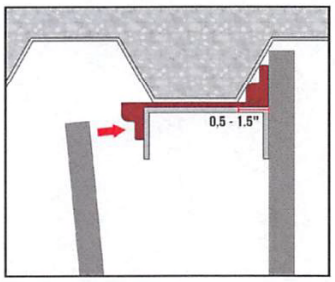

Version Date: 11/2021

TRACK RUNS DIAGONAL ACROSS FLUTING

- Please read the UL listing HW-D-0907

a) **CFS-TTS MD P**	b) **CFS-TTS MD P** **+** **CFS-TTS MD C**
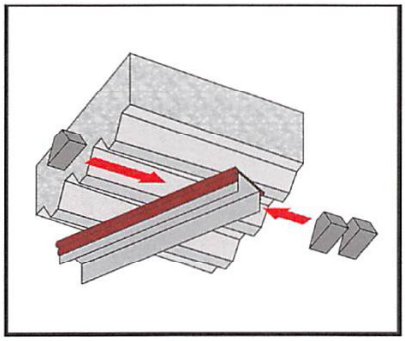 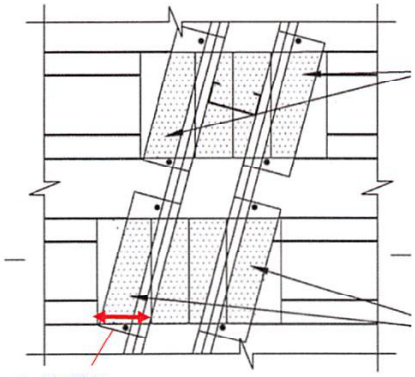 **Bottom View** Flute plugs to extend a minimum 2 ½" (64mm) beyond the ceiling runner. The width of the strap should be adjusted as such that it properly supports the plug. Plugs should always be installed in a 90° angle, perpendicular to the flute.	Where steel straps are used, flute plugs to extend max ½ in. (13 mm) beyond steel straps at both sides of wall. 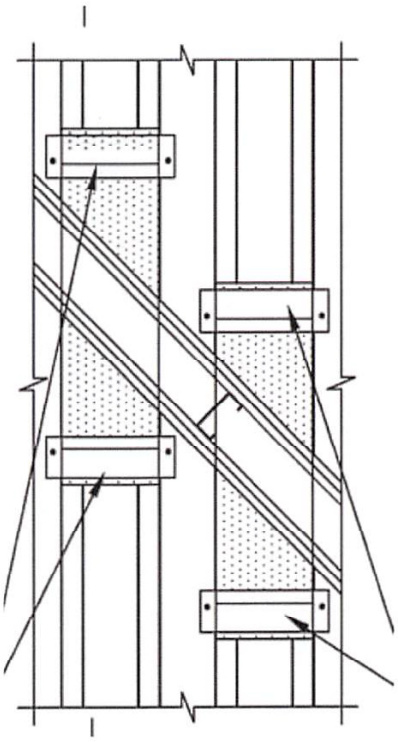 **Bottom View**

Version Date: 11/2021

CORNER INTERSECTIONS - PARALLEL & PERPENDICULAR

- Please read the UL listing HW-D-0871 (track perpendicular to flute) and the listing HW-D-0873 (track parallel to flute) and follow the instructions below to address corners.

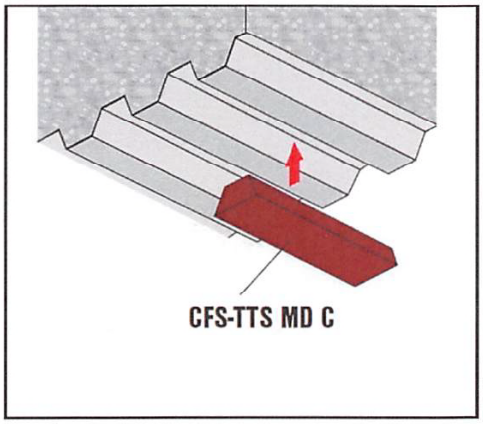

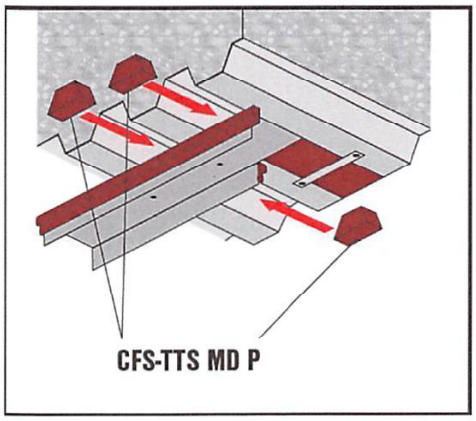

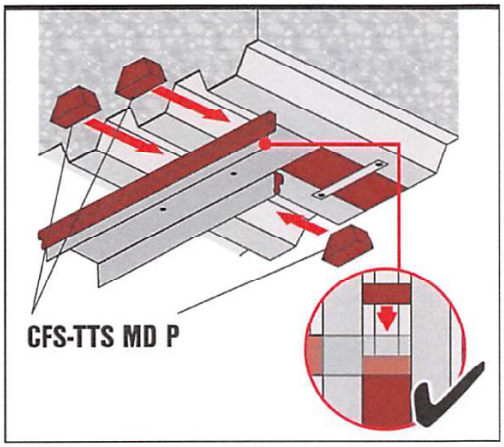

Version Date: 11/2021

a)	b)
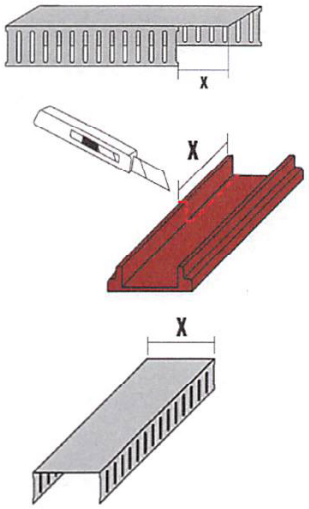 x - please leave space to accommodate track	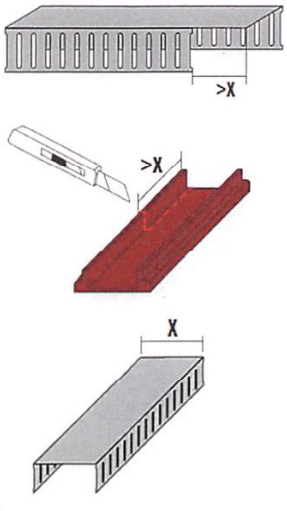 >x required, please leave space to accommodate track with TTS MD and board
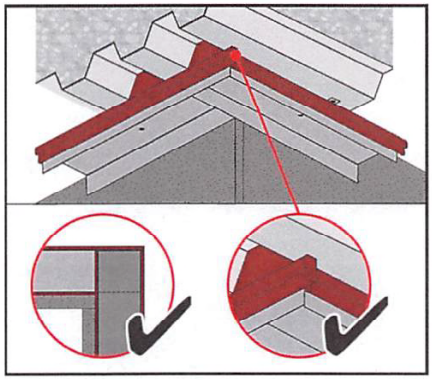	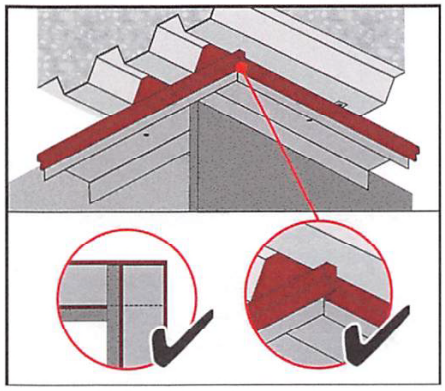

Version Date: 11/2021

TRACK IS PARALLEL UNDER I-BEAM WITH Z-CLIPS

a) **Gaps between track and beam filled with cementitious spray**	b) **Gaps with width up to ½" between track and beam:** (when void created by the Z-clips is not fully filled with cementitious fireproofing)
• Please read the UL listing HW-D-0875 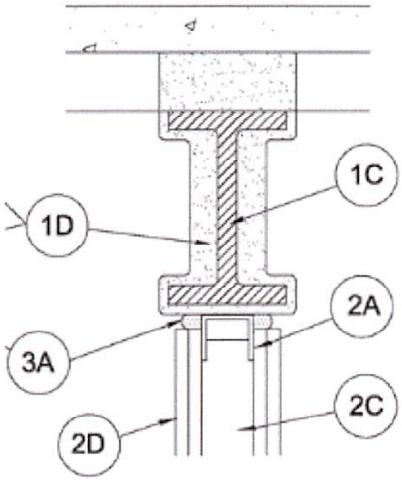 	• Compress CFS-TTS MD OS into gap on both sides of wall flush with track • Please request an EJ from our Hilti Fire Protection Engineering team for this installation situation 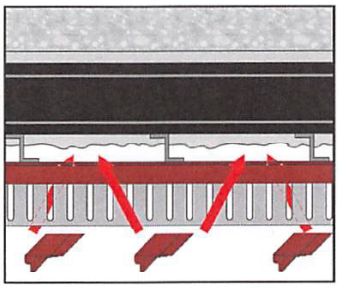 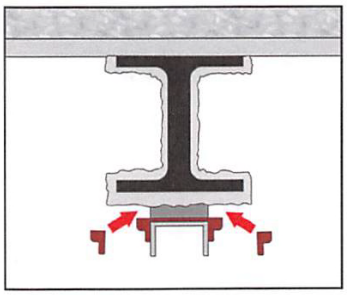 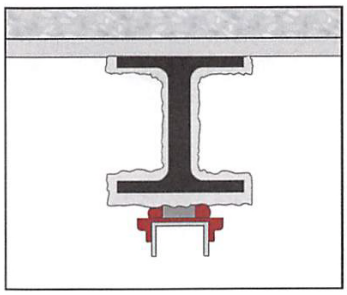

Version Date: 11/2021

WALL AROUND FIREPROOFED BEAM / BAR JOIST

a) Around beam/bar joist using CFS-TTS MD OS

Please read the UL listing HW-D-0874

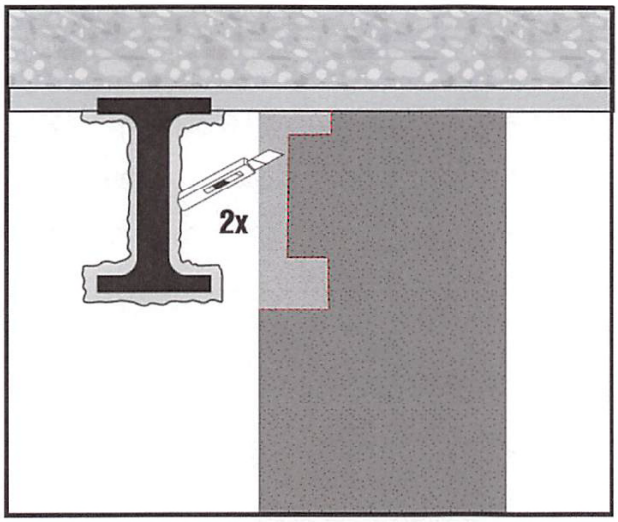

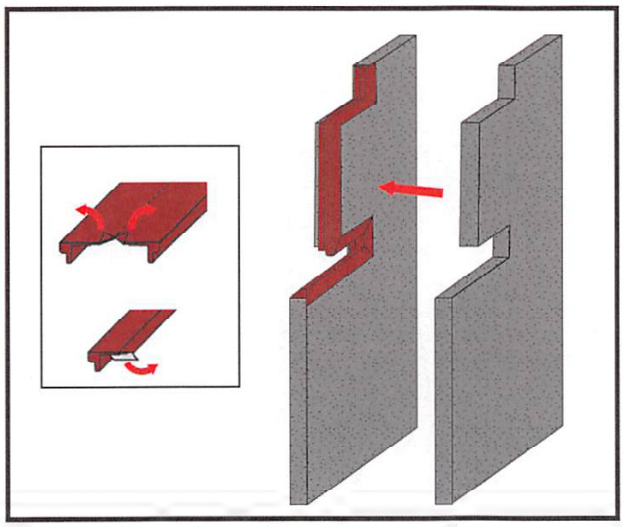

Version Date: 11/2021

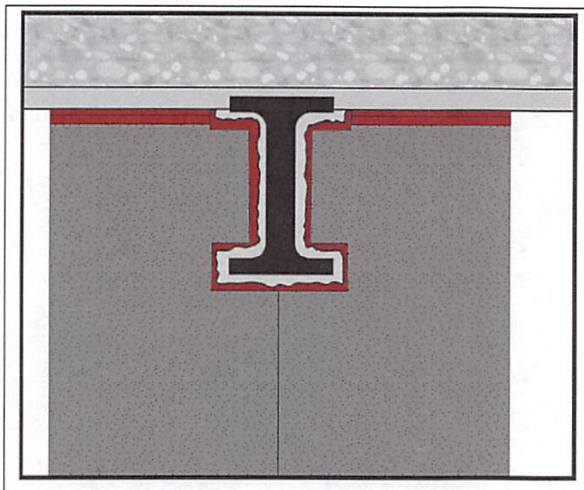

- For a one-hour wall with only one layer of drywall on each side, please request an EJ from our Hilti Fire Protection Engineering team for this installation situation

b) Around beam/bar joist using CFS-S SIL GG

- Please read the UL listing HW-D-0886
- Instead of using CFS-TTS MD OS to seal the joint around a fireproofed beam or bar joist, one could also use sealant installed at a depth of gypsum 5/8" or 1-1/4" of Hilti silicone sealant CFS-S SIL GG in up to a ¾" maximum annular space

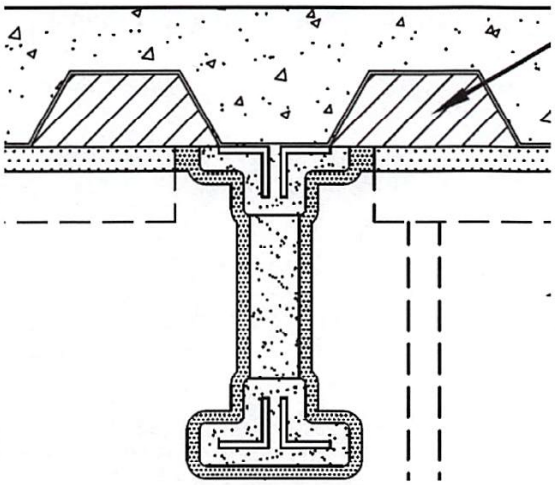

Version Date: 11/2021

WALL RUNNING PARALLEL OR OFFSET TO BEAM AND PERPENDICULAR TO FLUTES

a) Wall running parallel to beam

- Please read the UL listing HW-D-0884
- CFS-TTS MD P plugs can be installed from one side (non-beam facing side)

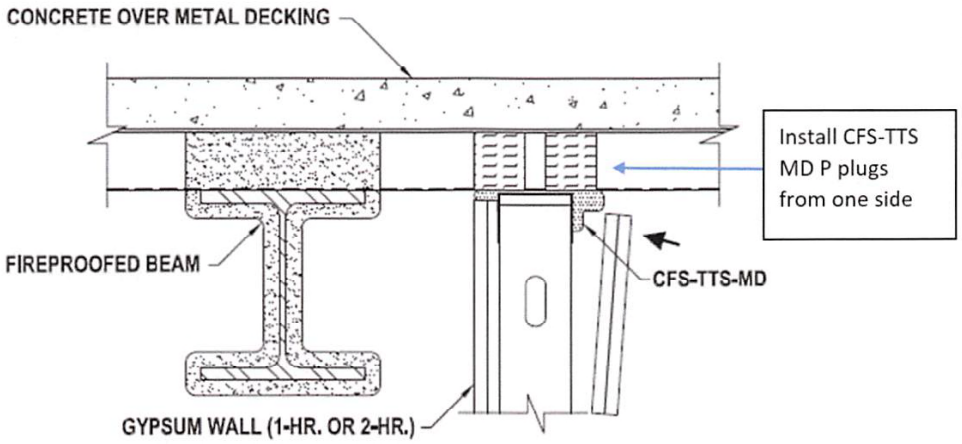

b) Wall running offset to beam up to deck

- Please request an EJ from our Hilti Fire Protection Engineering team for this installation situation

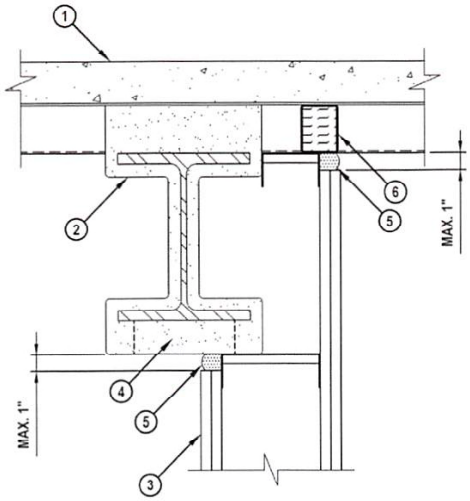

Version Date: 11/2021

c) Wall running offset to beam (extended base of the beam)

- Please read the UL listing HW-D-0876

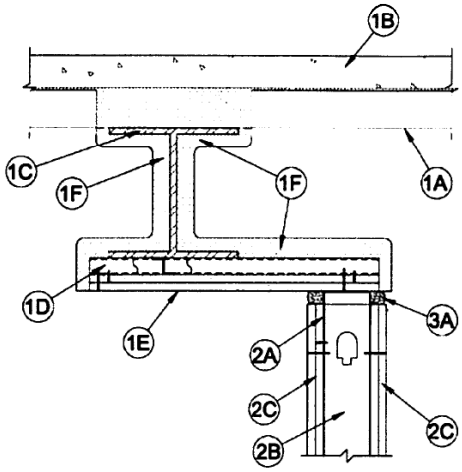

- Or UL listing HW-S-0134

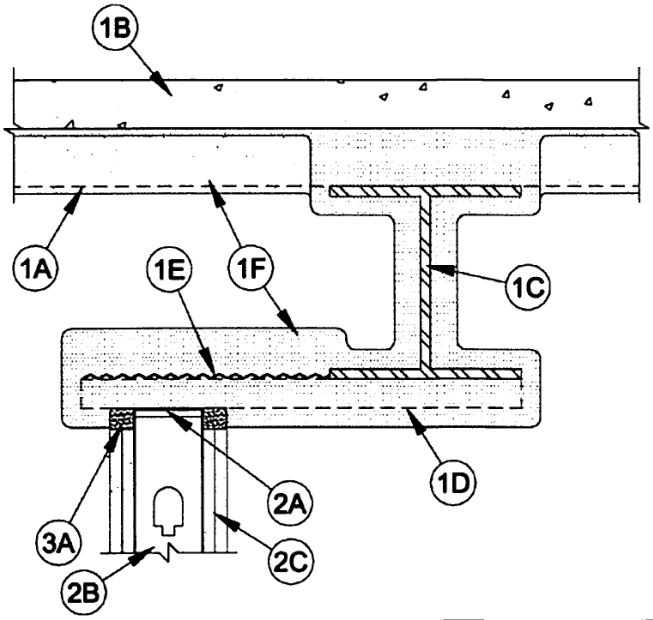

Version Date: 11/2021

PIPE OR CAST-IN DEVICE INTERSECTING TRACK PERPENDICULAR

- Please read the UL listing HW-D-0871
- Please use min. 20ga steel plates butted against ceiling runner at both sides of wall to span the flute and support the projected flute plug
- If the pipe type is CPVC please contact pipe manufacture for compatibility

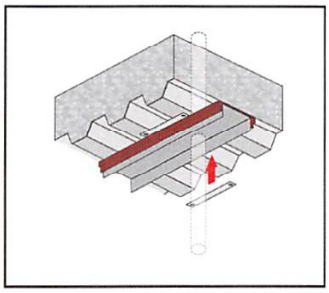

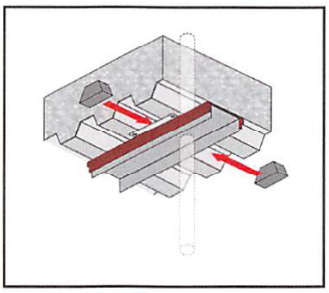

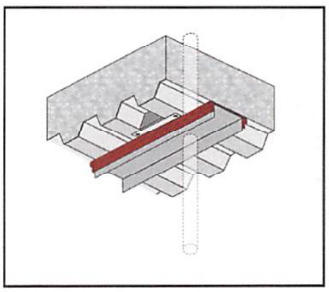

Version Date: 11/2021

PIPE OR CAST-IN DEVICE INTERSECTING TRACK PARALLEL

- Please request an EJ from our Hilti Fire Protection Engineering team for this installation situation
- If the pipe type is CPVC please contact pipe manufacture for compatibility

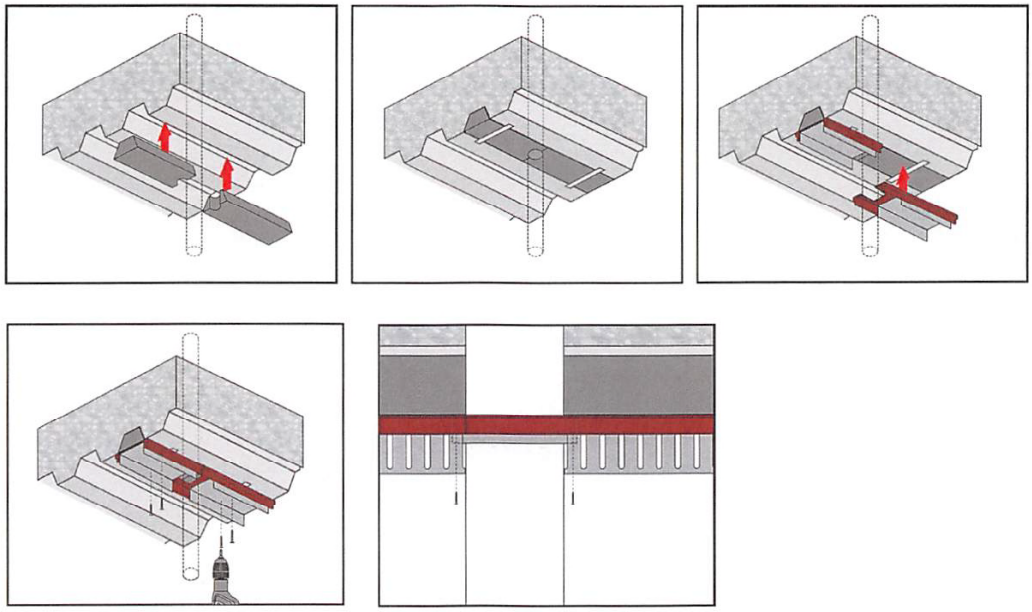

Version Date: 11/2021

SHAFT WALL

- Please read the UL listings HW-D-0881, HW-D-0882, HW-D-0883

HW-D-0881

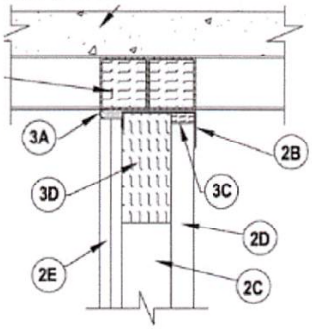

SECTION A-A

HW-D-0882

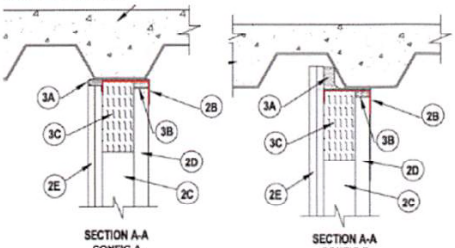

SECTION A-A CONFIG A

SECTION A-A CONFIG B

HW-D-0883

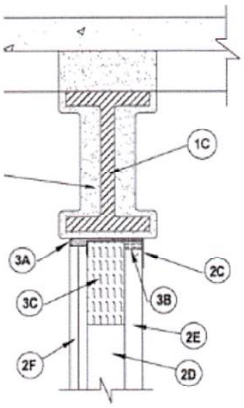

SECTION A-A

- For 2 ½" shaft walls please request an EJ from our Hilti Fire Protection Engineering team

Version Date: 11/2021

RATED WALL TO THE UNDERSIDE OF A NON-RATED METAL ROOF DECK

- Please request an EJ from our Hilti Fire Protection Engineering team for this installation situation
- Below picture refers to a min. 20 GA non fire-rated metal roof deck assembly

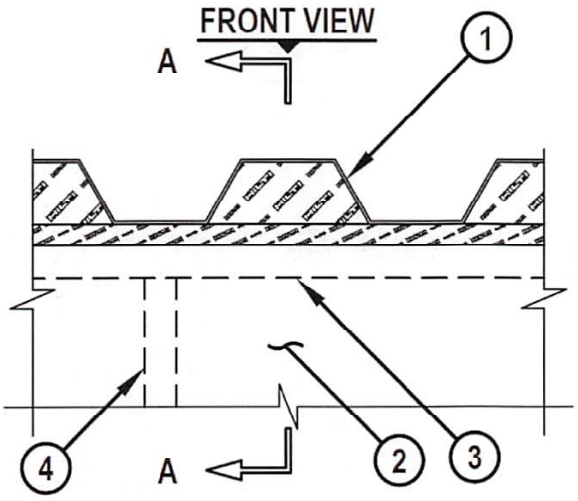

Version Date: 11/2021

NON-FIREPROOFED BEAM RUNNING PERPENDICULAR TO FLUTES

- Please request an EJ from our Hilti Fire Protection Engineering team for this installation situation
- The fire rating of the assembly is dependent upon the performance of the steel I-beam under fire conditions

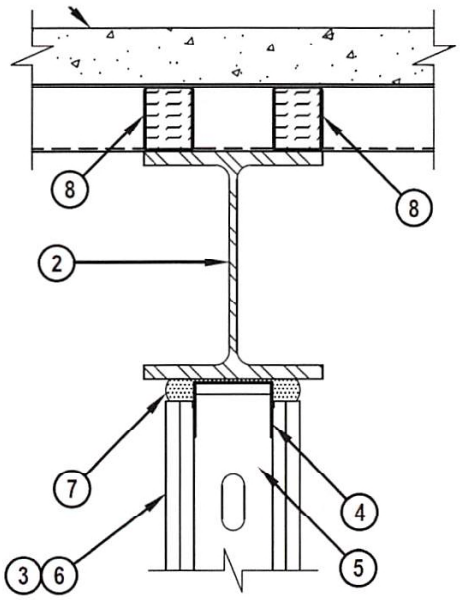

Hilti Firestop
Saving lives through innovation and education

Hilti North America
7250 Dallas Parkway Ste. 1000
Plano TX 75024
1-800-879-8000
www.hilti.com

Version Date: 11/2021

EXHIBIT O

CFS-TTS MD

2239499-11.2019

Top Track Seal CFS-TTS MD

Firestop top track seal | Coupe-feu pour profils supérieurs
Perfil cortafuego de techo

qr.hilti.com/r9599576

UL: www.hilti.com
cUL: www.hilti.ca
www.hilti.group

en Before handling and for specific application details, refer to Hilti product literature, 3rd party published listings and national approvals. For professional use only.
fr Avant toute utilisation et pour tout détail concernant une application, se référer à la documentation Hilti, à la liste de publications des tierces parties et aux approbations nationales. Seulement pour utilisateurs professionnels.
es Antes de usar y para detalles específicos de aplicación, véase la información que acompaña al producto Hilti, el listado publicado por terceros y las aprobaciones nacionales. Solamente para los usuarios profesionales.

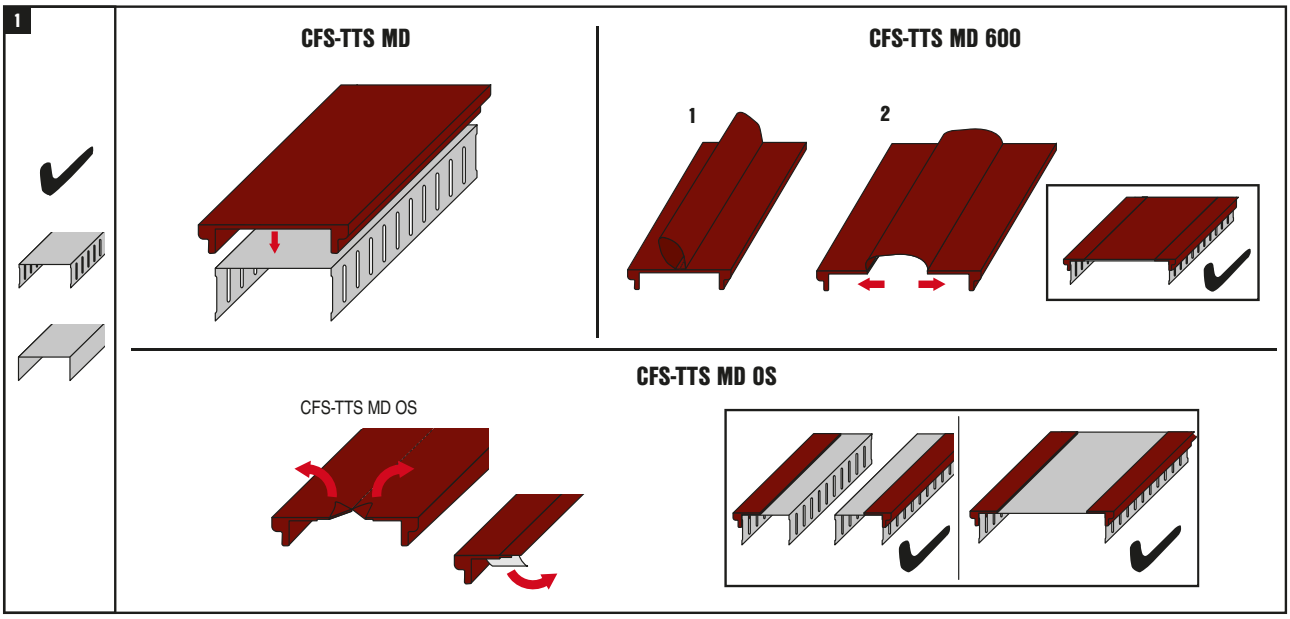

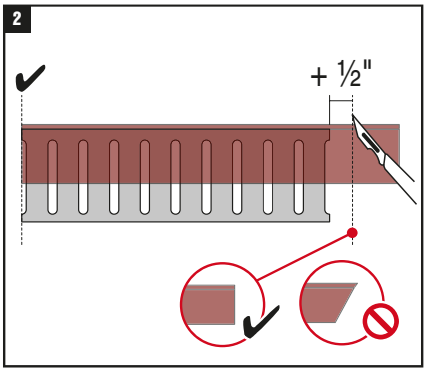

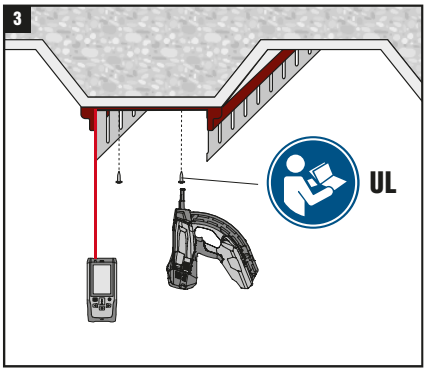

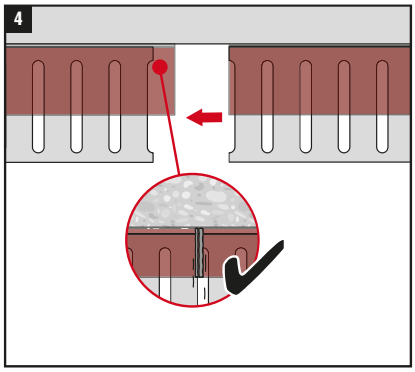

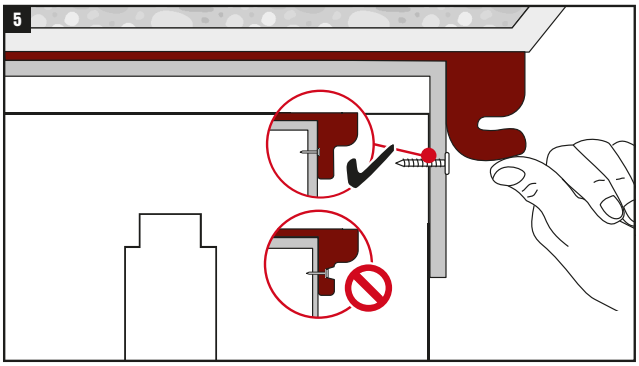

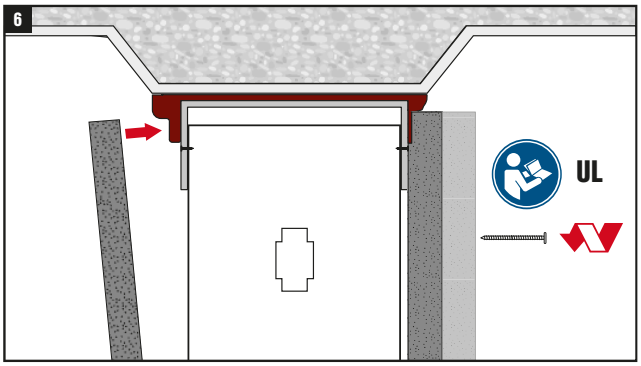

FLOOR PENETRATION / PENETRATION PLAFOND

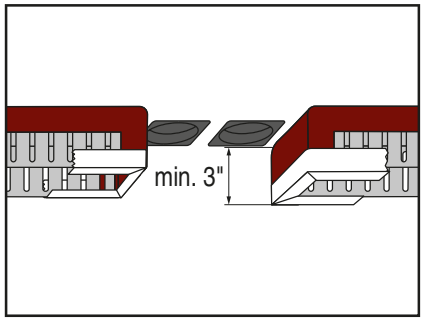

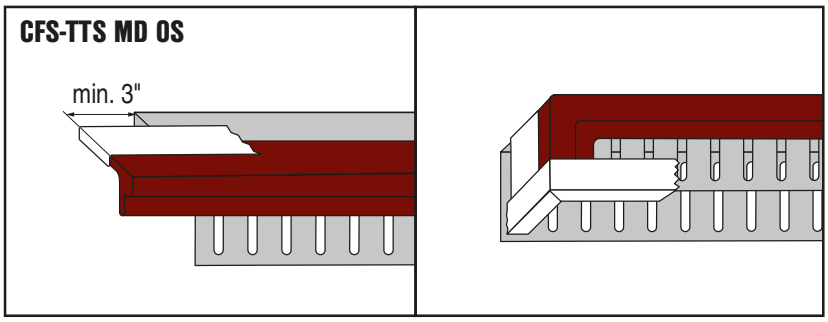

PERIMETER WALL / MUR D'ENCEINTE

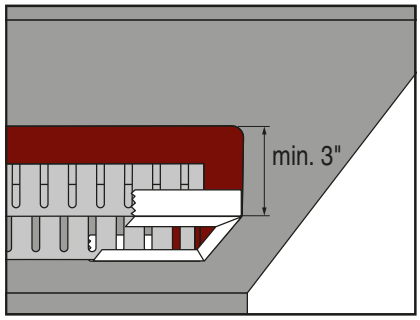

BOTTOM-OF-WALL / BAS DE MUR

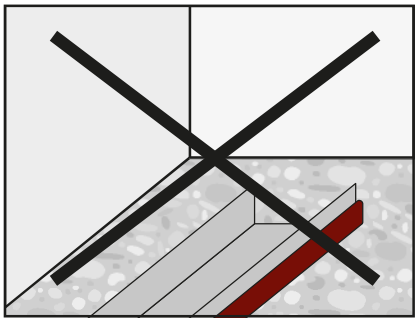

EXHIBIT P

SMOKE & ACOUSTIC TRACK SEAL CS-TTS SA

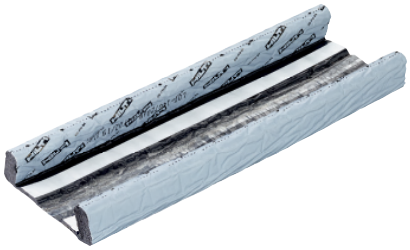

Product description

- Eliminate the need to caulk ceiling and wall joints in flat concrete construction with Hilti's Top Track Seal (TTS) solutions — simply saddle your track with TTS, install it, and you're done. No mess, zero waste.

Applications for use

- Smoke and sound seal for head-of-wall joints between top track and gypsum to flat concrete slabs
- Smoke and sound seal for head-of-wall joints between gypsum walls to corrugated metal deck and metal roof decks with CFS-TTS MD P & C
- CS-TTS SA 358/600 is designed for a perfect friction fit with common track sizes — 3-5/8" and 6"
- CS-TTS SA OS is a flexible solution for various track sizes

Advantages

- Fast installation — fewer working steps
- Excellent sealing properties designed for reliability under real jobsite conditions — STC and smoke seal on imperfect concrete
- No mess, zero waste — no caulking required
- Ideal shape designed to saddle over top track without additional folding, taping, or gluing

Installation instructions

- See Hilti Literature or third-party listings for complete application and installation details

Technical Data

FBC SYSTEM COMPATIBLE

Chemical basis	Polyurethane foam
Color	Light grey
Application temperature range	23° to 122°F
Storage and transportation temperature range	14° to 122°F
Movement	Approx. ±50%
Temperature resistance range	23° to 122°F
Mold and mildew performance	Class 0 (ASTM G21-96)
Tested in accordance with	ASTM E 90, ASTM G21, CAN/ULC-S102, UL 2079 (L-Rating), ASTM E 84
LEED VOC	0.20 lb/gal (US)
Acoustics performance	62 (relates to specific construction)

Hilti Firestop
Saving lives through innovation and education

EXHIBIT Q

CS-TTS SA

2174405 A3-11.2018

Smoke And Acoustic Track Seal CS-TTS SA

Smoke and acoustic track seal / Isolation acoustique de profile / Insonorizacion para perfiles

qr.hilti.com/r7433686

www.hilti.com
www.hilti.ca
www.hilti.group

en Before handling and for specific application details, refer to Hilti product literature, 3rd party published listings and national approvals. For professional use only.
fr Avant toute utilisation et pour tout détail concernant une application, se référer à la documentation Hilti, à la liste de publications des tierces parties et aux approbations nationales. Seulement pour utilisateurs professionnels.
es Antes de usar y para detalles específicos de aplicación, véase la información que acompaña al producto Hilti, el listado publicado por terceros y las aprobaciones nacionales. Solamente para los usuarios profesionales.

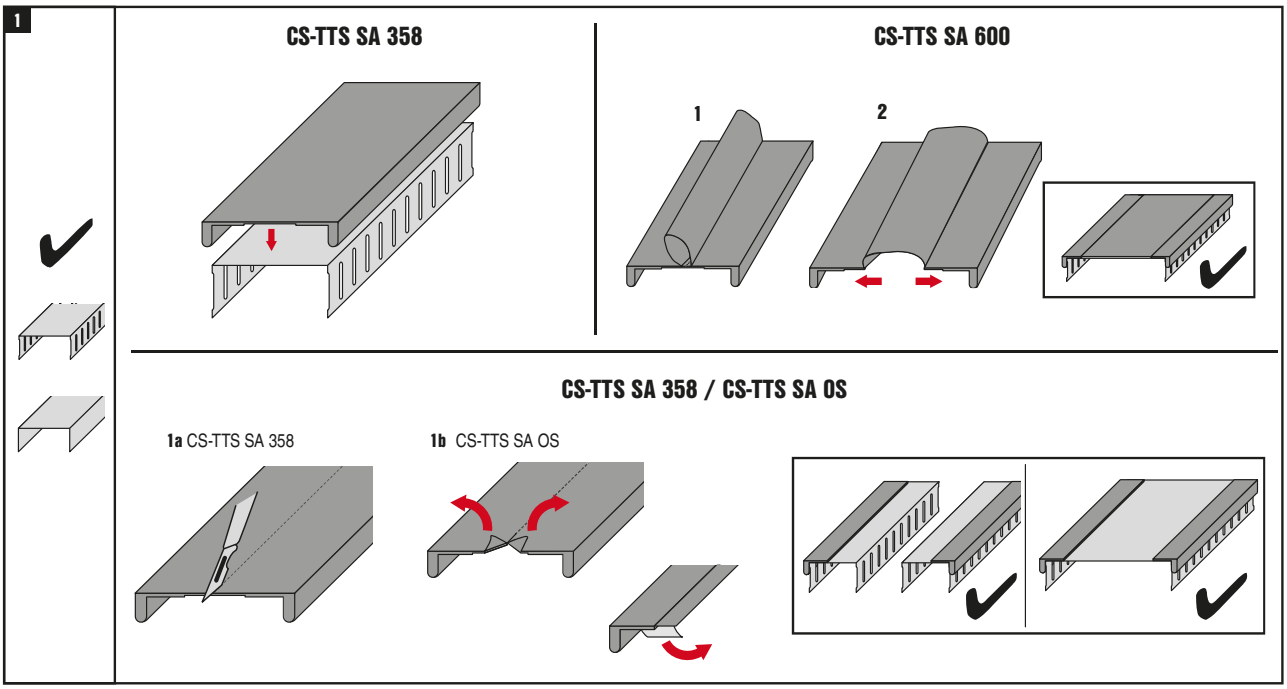

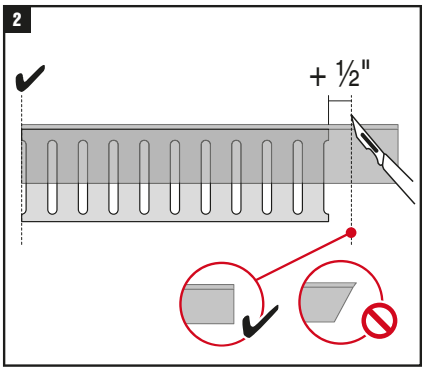

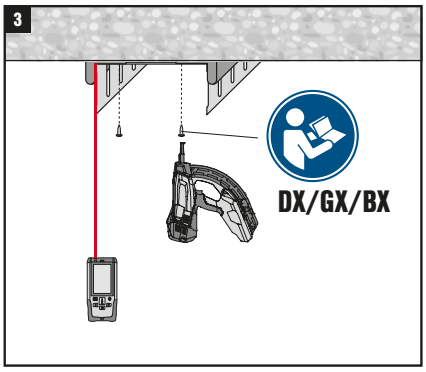

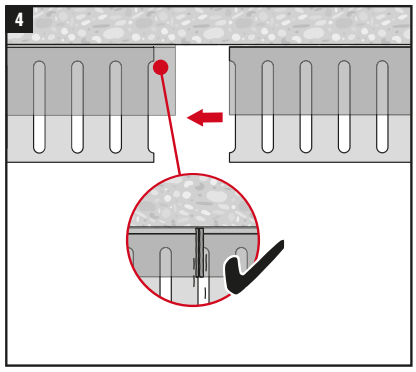

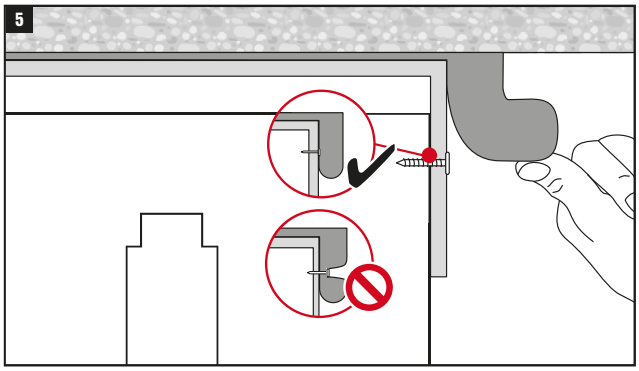

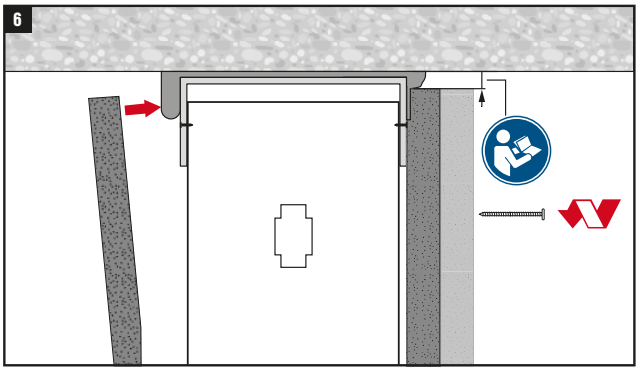

FLOOR PENETRATION / PENETRATION PLAFOND

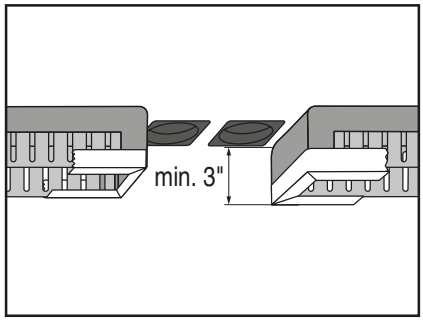

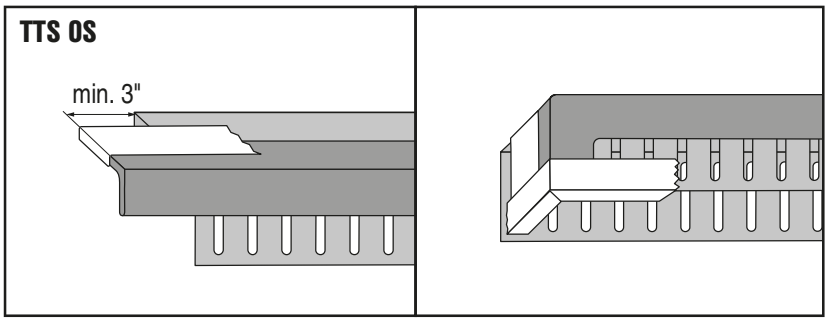

PERIMETER WALL / MUR D'ENCEINTE

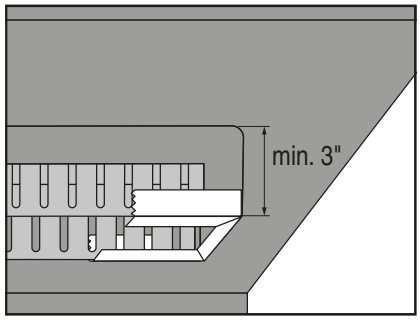
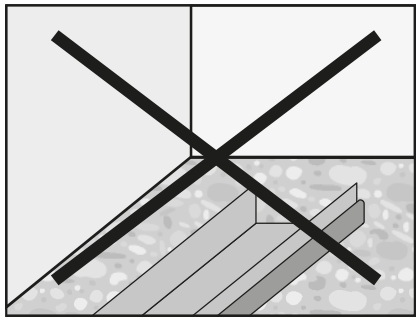
BOTTOM-OF-WALL / BAS DE MUR