IN THE UNITED STATES DISTRICT COURT
FOR THE DISTRICT OF DELAWARE

HILTI AKTIENGESELLSCHAFT, Plaintiff, v. SPECIFIED TECHNOLOGIES INC., Defendant.	))))))))))	C.A. No. 22-1248-CJB PUBLIC VERSION Filed April 1, 2024

JOINT CLAIM CONSTRUCTION BRIEF

YOUNG CONAWAY STARGATT & TAYLOR, LLP

Pilar G. Kraman (No. 5199)
Alexis N. Stombaugh (No. 6702)
Colin A. Keith (No. 7074)
Rodney Square
1000 North King Street
Wilmington, DE 19801
(302) 571-6600
pkraman@ycst.com
astombaugh@ycst.com
ckeith@ycst.com

W. Cook Alciati
GARDELLA GRACE P.A.
80 M Street SE, 1st Floor
Washington, D.C. 20003
(703) 721-8379
calciati@gardellagrace.com

Michael A. Dorfman
GARDELLA GRACE P.A.
2502 North Clark Street, Suite 222

FOX ROTHSCHILD LLP

Austen C. Endersby (No. 5161)
1201 N. Market Street, Suite 1200
Wilmington, DE 19801
- and -
2020 K Street, Suite 500
Washington, D.C. 20006
aendersby@foxrothschild.com

Jeff E. Schwartz
FOX ROTHSCHILD LLP
2020 K Street, N.W., Suite 500
Washington, D.C. 20006
JESchwartz@FoxRothschild.com

Howard S. Suh
FOX ROTHSCHILD LLP
101 Park Avenue, 17th Floor
New York, New York 10178
HSuh@foxrothschild.com

Paul W. Kalish

Chicago, IL 60614
(773) 755-4942
mdorfman@gardellagrace.com

Attorneys for Hilti Aktiengesellschaft

FOX ROTHSCHILD LLP
Princeton Pike Corporate Center
997 Lenox Drive
Lawrenceville, New Jersey 08648
PKalish@FoxRothschild.com

Attorneys for Specified Technologies Inc.

Dated: March 15, 2024

TABLE OF CONTENTS

Page

I. AGREED UPON CONSTRUCTIONS 1

II. HILTI's ASSERTED PATENTS 1

A. INTRODUCTION 1

1. Hilti's Opening Position 1

2. STI's Answering Position 2

B. TERMS FOR CONSTRUCTION 2

1. "modular construction"/"modular frame" 2

a. Hilti's Opening Position 3

b. STI's Answering Position 7

c. Hilti's Reply Position 12

d. STI's Sur-Reply Position 15

2. "a first direction" and "a second direction" 18

a. Hilti's Opening Position 19

b. STI's Answering Position 24

c. Hilti's Reply Position 34

d. STI's Sur-Reply Position 40

3. "the first intumescent material" and "the first and second intumescent materials" 42

a. Hilti's Opening Position 42

b. STI's Answering Position 42

c. Hilti's Reply Position 45

d. STI's Sur-Reply Position 49

4. "connection elements"/"connection section" 50

a. Hilti's Opening Position 51

b. STI's Answering Position 56

c. Hilti's Reply Position 60

d. STI's Sur-Reply Position 65

5. "sealing element"/"sealing section" 67

a. Hilti's Opening Position 68
b. STI's Answering Position 72
c. Hilti's Reply Position 78
d. STI's Sur-Reply Position 83
6. "at a distance from and next to one another" 85
a. Hilti's Opening Position 85
b. STI's Answering Position 85
c. Hilti's Reply Position 87
d. STI's Sur-Reply Position 88
7. "the perforation is . . . configured to improve ease of separation of two halves of the joint sealing tape" 89
a. Hilti's Opening Position 89
b. STI's Answering Position 90
c. Hilti's Reply Position 91
d. STI's Sur-Reply Position 92
8. "the sealing elements and the connection element consist of one material in one piece, and are sheathed with plastic film" 94
a. Hilti's Opening Position 94
b. STI's Answering Position 95
c. Hilti's Reply Position 98
d. STI's Sur-Reply Position 98
9. "coupled to" 99
a. Hilti's Opening Position 99
b. STI's Answering Position 100
c. Hilti's Reply Position 104
d. STI's Sur-Reply Position 106
10. '036 and '528 preambles 109
a. Hilti's Opening Position 109
b. STI's Answering Position 111
c. Hilti's Reply Position 114
d. STI's Sur-Reply Position 114

III. STI'S ASSERTED PATENTS 115
A. INTRODUCTION 115
1. STI's Opening Position 115
2. Hilti's Answering Position 115
3. Hilti's Sur-Reply Position 116
B. '232 PATENT – DISPUTED TERMS 116
1. "An adjustable head-of-wall insulating construction for sealing a head-of-wall area between a ceiling thereabove and a wall configuration therebelow which is wider than standard and which includes a ceiling track" (preamble, claim 6) 116
a. STI's Opening Position 117
b. Hilti's Answering Position 121
c. STI's Reply Position 135
d. Hilti's Sur-Reply Position 142
2. "at least one connecting strap positioned above the main track section of the ceiling track" (claim 6) 147
a. STI's Opening Position 147
b. Hilti's Answering Position 149
3. "and attached to said first L-shaped gasket section and to said second L-shaped gasket section to limit spatial separation therebetween" (claim 6) .150
a. STI's Opening Position 150
b. Hilti's Answering Position 151
c. STI's Reply Position 155
d. Hilti's Sur-Reply Position 156
4. "spatially disposed" (claim 8) 157
a. STI's Opening Position 157
b. Hilti's Answering Position 161
c. STI's Reply Position 163
d. Hilti's Sur-Reply Position 166
5. "insulating material which includes an acoustical insulating component therewithin" (claim 11) 167
a. STI's Opening Position 167

b. Hilti's Answering Position 168
C. '868 PATENT – DISPUTED TERMS 168
1. "Moveable relative to one another" (claims 1, 9) 168
a. STI's Opening Position 168
b. Hilti's Answering Position 169
c. STI's Reply Position 176
d. Hilti's Sur-Reply Position 180
2. "the housing including first and second housing member which are completely detachable from one another and moveable relative to one another between an assembled condition wherein the first and second housing members are interconnected and the wall surface is substantially continuous about the internal chamber, and an open condition wherein at least a portion of the first and second housing members are spaced from one another such that at least a portion of the wall surface is non-contiguous to define an opening into the internal chamber" (claim 1) 184
a. STI's Opening Position 185
3. "the housing including first and second housing members which are moveable relative to one another between an assembled condition wherein the first and second housing members are interconnected and the wall surface is substantially continuous about the internal chamber, and an open condition wherein at least a portion of the first and second housing members are spaced from one another such that at least a portion of the wall surface is non-contiguous to define an opening into the internal chamber" (claim 9) 188
a. STI's Opening Position 189
b. Hilti's Answering Position 190
c. STI's Reply Position 195
d. Hilti's Sur-Reply Position 200
4. "Front and rear panels" (claim 1) 200
a. STI's Opening Position 200
b. Hilti's Answering Position 203
c. STI's Reply Position 205
d. Hilti's Sur-Reply Position 208
5. "Panel(s)" (claim 1, 9) 209
a. STI's Opening Position 210

b. Hilti's Answering Position 211
c. STI's Reply Position 217
d. Hilti's Sur-Reply Position 218

TABLE OF AUTHORITIES

Page(s)

CASES

3M Innovative Properties Co. v. Avery Dennison Corp.,
350 F.3d 1365 (Fed. Cir. 2003) 7

Abbott Labs. v. Andrx Pharms., Inc.,
473 F.3d 1196 (Fed. Cir. 2007) 8

AIA Eng'g Ltd. v. Magotteaux Int'l,
657 F.3d 1264 (Fed. Cir. 2011) 30, 161, 187, 188

AK Steel Corp. v. Sollac & Ugine,
344 F.3d 1234 (Fed. Cir. 2003) 56

Alarm.com, Inc. v. SecureNet Techs., LLC,
2019 WL 3996883 (D. Del. Aug. 23, 2019).....75

Allen Med. Sys., Inc. v. Schuerch Corp.,
2020 WL 3489611 (D. Mass June 26, 2020).....101

Anspach ex rel. Anspach v. City of Philadelphia, Dep't of Pub. Health,
503 F.3d 256 (3d Cir. 2007) 197

Arctic Cat Inc. v. GEP Power Prods., Inc.,
919 F.3d 1320 (Fed. Cir. 2019) 112, 118

Asyst Techs., Inc. v. Empak, Inc.,
268 F.3d 1364 (Fed. Cir. 2001) 83, 85

Autogiro Co. of Am. v. United States,
384 F.2d 391 (Ct. Cl. 1967).....120

Avenue Innovations, Inc. v. E. Mishan & Sons Inc.,
310 F. Supp. 3d 457 (S.D.N.Y. 2018) 91

Azurity Pharms., Inc. v. Alkem Labs. Ltd.,
2023 WL 3254117 (D. Del. May 4, 2023) 147

Baldwin Graphic Sys., Inc. v. Siebert, Inc.,
512 F.3d 1338 (Fed. Cir. 2008) 34, 40

Becton, Dickinson & Co. v. Tyco Healthcare Grp., LP,
616 F.3d 1249 (Fed. Cir. 2010) 97

Big D Indus., Inc. v. Fresh Products, Inc.,
2022 WL 1017908 (W.D. Okla. Apr. 5, 2022).....169

CA, Inc. v. Netflix, Inc.,
2021 WL 5323413 (E.D. Tex. Nov. 16, 2021).....90

Catalina Mktg. Int'l, Inc. v. Coolsavings.com, Inc.,
289 F.3d 801 (Fed. Cir. 2002) .....*passim*

Chef Am., Inc. v. Lamb-Weston, Inc.,
358 F.3D 1371 (Fed. Cir. 2004) 147

Collaborative Agreements, LLC v. Adobe Sys. Inc.,
2015 WL 7753293 (N.D. Cal. Dec. 2, 2015).....69

Collins v. Nissan N.A., Inc.,
2013 WL 448923 (E.D. Tex. Feb. 6, 2013).....13, 15

Confluent Surgical, Inc. v. Hyperbranch Med. Tech., Inc.,
2019 WL 1075539 (D. Del. Mar. 7, 2019).....112, 118

Copperhead Indus., Inc. v. Changer & Dresser, Inc.,
2020 WL 429484 (N.D. Ala. Jan. 28, 2020) 40

Digital-Vending Servs. Int'l, LLC v. Univ. of Phoenix, Inc.,
672 F.3d 1270 (Fed. Cir. 2012) 172

Ecolab, Inc. v. FMC Corp.,
569 F.3d 1335 (Fed. Cir. 2009) 4

Energizer Holdings, Inc. v. Int'l Trade Comm'n,
435 F.3d 1366 (Fed. Cir. 2006) 47

Grace Instrument Indus., LLC v. Chandler Instruments Co., LLC,
57 F.4th 1001 (Fed. Cir. 2023) 7

Halliburton Energy Servs., Inc. v. M-I LLC,
514 F.3d 1244 (Fed. Cir. 2008) 43

Harari v. Lee,
656 F.3d 1331 (Fed. Cir. 2011) 40

Helmsderfer v. Bobrick Washroom Equip., Inc.,
527 F.3d 1379 (Fed Cir. 2008) 104, 120

Hill-Rom Servs, Inc. v. Stryker Corp.,
755 F.3d 1367 (Fed. Cir. 2014) 14, 121, 185

Immersion Corp. v. HTC Corp.,
2015 WL 581572 (D. Del. Feb. 11, 2015).....188

Intellicall, Inc. v. Phonometrics, Inc.,
952 F.2d 1384 (Fed. Cir. 1992) 12

Interval Licensing LLC v. AOL, Inc.,
766 F.3d 1364 (Fed. Cir. 2014) 86

Intirtool, Ltd. v. Texar Corp,
369 F.3d 1289 (Fed. Cir. 2004) 137

K–2 Corp. v. Salomon S.A.,
191 F.3d 1356 (Fed. Cir. 1999) 120

K-fee System GmbH v. Nespresso USA, Inc.,
89 F.4th 915 (Fed. Cir. 2023) 208

In re Katz Interactive Call Processing Patent Litig.,
639 F.3d 1303 (Fed. Cir. 2011) 55, 134, 141

Liebel–Flarsheim Co. v. Medrad, Inc.,
358 F.3d 898 (Fed. Cir. 2004) 149

Magnolia Med. Techs., Inc. v. Kurin, Inc.,
2020 WL 2559795 (D. Del. May 20, 2020) 75

Mas-Hamilton Grp. v. LaGard, Inc.,
156 F.3d 1206 (Fed. Cir. 1998) 74

MBO Lab'ys., *Inc. v. Becton*, *Dickinson & Co.*,
474 F.3d 1323 (Fed. Cir. 2007) 100

McCarty v. Lehigh Val. R.R. Co.,
160 U.S. 110 (1895).....103, 160

Micro Chem., Inc. v. Great Plains Chem. Co. Inc.,
194 F.3d 1250 (Fed. Cir. 1999) 71, 82, 84

Microsoft Corp. v. i4i Ltd. P'ship,
564 U.S. 91 (2011).....42, 85, 89, 94

National Oilwell Varco, L.P. v. Auto-Dril, Inc.,
2011 WL 3648532 (E.D. Tex. Aug. 16, 2011).....101

Nautilus, Inc. v. Biosig Instruments, Inc.,
572 U.S. 898 (2014).....*passim*

Noah Sys., Inc. v. Intuit Inc.,
675 F.3d 1302 (Fed. Cir. 2012) 43

NuVasive, Inc., v. Alphatec Holdings, Inc.,
2021 WL 3886211 (S.D. Cal. 2021 Aug. 31, 2021).....86

Omega Eng'g, Inc, v. Raytek Corp.,
334 F.3d 1314 (Fed. Cir. 2003) 25

One-E-Way, Inc. v. ITC,
859 F.3d 1059 (Fed. Cir. 2017) 60

Pacing Techs., LLC v. Garmin Int'l., Inc.,
778 F.3d 1021 (Fed. Cir. 2015) 102

Panasonic Corp. v. Magna International Inc.,
2022 WL 625089 (W.D. Tex. March 3, 2022).....113

Pfizer, Inc. v. Teva Pharms., USA, Inc.,
429 F.3d 1364 (Fed. Cir. 2005) 100

Phillips v. AWH Corp.,
415 F.3d 1303 (Fed. Cir. 2005) 147, 183

Pitney Bowes, Inc. v. Hewlett-Packard Co.,
182 F.3d 1298 (Fed. Cir. 1999) 137

Prima Tek II, L.L.C. v. Polypap, S.A.R.L.,
318 F.3d 1143 (Fed. Cir. 2003) 25, 59

Proveris Sci. Corp. v. Innovasystems, Inc.,
739 F.3d 1367 (Fed. Cir. 2014) 126

Recticel Automobilesysteme GmbH v. Automotive Components Holdings, LLC,
2012 WL 1276003 (E.D. Mich. Apr. 16, 2012) 169

Resonate Inc. v. Alteon Websystems, Inc.,
338 F.3d 1360 (Fed. Cir. 2003) 121, 149

Rexnord Corp. v. Laitram Corp.,
274 F.3d 1336 (Fed. Cir. 2001) 18

Rockwell Techs., LLC. v. Spectra–Physics Lasers, Inc.,
2002 WL 531555 (D. Del. Mar. 26, 2002) 197

Rotatable Techs. LLC v. Motorola Mobility LLC,
567 F. App'x. 941 (Fed. Cir. 2014) 126

Schumer v. Lab. Comput. Sys., Inc.,
308 F.3d 1304 (Fed. Cir. 2002) 147

SciMed Life Sys., Inc. v. Advanced Cardiovascular Sys., Inc.,
242 F.3d 1337 (Fed. Cir. 2001) 149

Seachange Int'l, Inc. v. C-COR, Inc.,
413 F.3d 1361 (Fed. Cir. 2005) 25, 59

Sentient Sensors, LLC v. Cypress Semiconductor Corp.,
2021 WL 289410 (D. Del. Jan. 28, 2021) 111, 113, 118

SIMO Holdings, Inc. v. H.K. Ucloudlink Network Tech,
983 F.3d 1367 (Fed. Cir. 2021) 57

Skky, Inc. v. MindGeek, s.a.r.l.,
859 F.3d 1014 (Fed. Cir. 2017) 79

SunRace Roots Enter. Co. Ltd. v. SRAM Corp.,
336 F.3d 1298 (Fed. Cir. 2003) 4

Symantec Corp. v. Comput. Associates Intern., Inc.,
522 F.3d 1279, 1289 (Fed. Cir. 2008) 114

Syneron Med. Ltd. v. Invasix, Inc.,
2018 WL 11351325 (C.D. Cal. Sept. 28, 2018) 79

Thorner v. Sony Comput. Ent. Am. LLC,
669 F.3d 1362 (Fed. Cir. 2012) 4

TIP Systems, LLC v. Phillips & Brooks/Gladwin, Inc.,
529 F.3d 1364 (Fed. Cir. 2008) 57

Trivascular, Inc. v. Samuels,
812 F.3d 1056 (Fed. Cir. 2016) 3

U.S. Surgical Corp. v. Ethicon,
103 F.3d 1554 (Fed. Cir. 1997) 158

In re Varma,
816 F.3d 1352 (Fed. Cir. 2016) 40

Verizon Servs. Corp. v. Vonage Holdings Corp.,
503 F.3d 1295 (Fed. Cir. 2007) 100

Vivid Techs., Inc. v. Am. Sci. & Eng'g, Inc.,
200 F.3d 795 (Fed. Cir. 1999) 194

In re Walter,
698 F. App'x 1022 (Fed. Cir. 2017) 127

Wenger Mfg., Inc. v. Coating Mach. Sys., Inc.,
239 F.3d 1225 (Fed. Cir. 2001) 71

Williamson v. Citrix Online, LLC,
792 F.3d 1339 (Fed. Cir. 2015) .....*passim*

Wright Med. Tech., Inc. v. Osteonics Corp.,
122 F.3d 1440 (Fed. Cir. 1997) 31, 160

WSOU Investments LLC v. Google LLC,
2023 WL 6210607 (Fed. Cir. Sept. 25, 2023) 74

STATUTES

35 U.S.C. § 112(b) 42

35 U.S.C. §112(f) .....*passim*

RULES

LR 7.1.3(c)(2) 197

Pursuant to Paragraph 17 of the Amended Scheduling Order (D.I. 88), Plaintiff and Counter-Defendant Hilti Aktiengesellschaft ("Hilti"), and Defendant and Counterclaimant Specified Technologies Inc. ("STI"), (together with Hilti, the "Parties") jointly submit this claim construction brief.

I. AGREED UPON CONSTRUCTIONS

The parties agree on the constructions of the following terms: "at least one connecting strap positioned above the main track section of the ceiling track" (*see infra* at 147-150) and "insulating material which includes an acoustical insulating component therewithin" (*see infra* at 166-167).

II. HILTI's ASSERTED PATENTS

A. INTRODUCTION

1. Hilti's Opening Position

STI has identified thirteen terms for construction from Hilti's asserted patents.[1] In doing so, STI either seeks narrow constructions that are inconsistent with the plain and ordinary meaning of the claim terms or argues that the terms render the claims in which they appear indefinite. STI cannot carry its burden to identify lexicography or disclaimer to narrow the terms in the way it proposes.

[1] Text-searchable versions of U.S. Patent Nos. 10,267,036 (the "'036 patent"), 10,774,528 (the "'528 patent"), 10,610,711 (the "'711 patent"), 10,596,399 (the "'399 patent"), 10,641,417 (the "'417 patent"), and 11,137,091 (the "'091 patent") are attached to the Joint Claim Construction Chart (D.I. 97) as Appendix B through Appendix G, respectively.

Similarly, STI cannot carry its burden to show by clear and convincing evidence that certain of the claim terms render the claims in which they appear indefinite. Rather than adopting STI's positions, the Court should construe the terms according to their plain and ordinary meaning, which Hilti articulates below.

2. STI's Answering Position

For the reasons discussed below, the Court should reject Hilti's constructions and adopt STI's constructions.

3. Hilti's Reply Position

According to STI, each of the thirteen terms it has identified for construction is indefinite on its own or would be indefinite if the Court were to adopt Hilti's construction. STI's overreaching view of indefiniteness is inconsistent with the law and intrinsic evidence. The same is true with respect to STI's disclaimer arguments: STI imagines disclaimers that are simply not present, much less with the clarity and unmistakability required by the law. The Court should find that STI has failed to carry its clear and convincing evidentiary burden on indefiniteness and adopt Hilti's plain meaning constructions.

B. TERMS FOR CONSTRUCTION

1. "modular construction"/"modular frame"

Hilti	STI
This term should be construed according to its plain meaning, as informed by the	"constructed of a few common parts that can be configured in diverse

intrinsic record, which is "multipart construction"/"multipart frame" If this term is not construed according to its plain and ordinary meaning, it should be construed as Hilti proposes based on the intrinsic record.	ways"/"a frame constructed of a few common parts that can be configured in diverse ways"

a. Hilti's Opening Position

These terms appear in claim 1 of the '711 and '399 patents, respectively. Hilti's position is that these terms should be construed according to their plain and ordinary meaning, which is "multipart construction"/ "multipart frame." (JCCC at pp. 9-10.)[2] Hilti's proposal is correct because "modular," as reflected in the intrinsic record, means "multipart," and, thus, "modular construction" and "modular frame" are "multipart construction" and "multipart frame," respectively.

Conversely, STI argues that the terms should be narrowly construed from their plain and ordinary meaning to mean "a frame constructed of a few common parts that can be configured in diverse ways." (*Id.*) As the party seeking to depart from the plain and ordinary meaning, it is STI's burden to identify lexicography or disclaimer, which would narrow the claim terms in the manner STI proposes. *Trivascular, Inc. v. Samuels*, 812 F.3d 1056, 1063-64 (Fed. Cir. 2016) ("The party seeking to invoke prosecution history disclaimer bears the burden of proving the

[2] Citations to "JCCC" refer to Exhibit A to the Joint Claim Construction Chart (D.I. 97).

existence of a 'clear and unmistakable' disclaimer that would have been evident to one skilled in the art."); *SunRace Roots Enter. Co. Ltd. v. SRAM Corp.*, 336 F.3d 1298, 1304 (Fed. Cir. 2003) ("We next look to the specification to determine whether SunRace has satisfied its burden of showing that SRAM meant to define the term 'shift actuator' more restrictively than is suggested by its ordinary meaning and by the doctrine of claim differentiation.").

"Both exceptions [to a plain meaning construction] require a clear and explicit statement by the patentee." *Thorner v. Sony Comput. Ent. Am. LLC*, 669 F.3d 1362, 1368 (Fed. Cir. 2012). Whether lexicography or disclaimer are present must be viewed against the intrinsic record as a whole. *Ecolab, Inc. v. FMC Corp.*, 569 F.3d 1335, 1342 (Fed. Cir. 2009) ("Even if an isolated statement appears to disclaim subject matter, the prosecution history as a whole may demonstrate that the patentee committed no clear and unmistakable disclaimer.").

Given that it is STI's burden to justify its proposed narrowing of the "modular" claim terms, Hilti will respond in greater detail once STI has attempted to meet its burden. That said, STI appears to base its construction on the following sentence: "A frame of modular construction in the firestop collar means in particular that this is constructed from a few common parts and can be configured in diverse ways." ('711 patent at 1:39-41; '399 patent at 1:45-47.) Hilti expects STI to argue that this statement is lexicography. However, the rest of the specification clarifies

that a frame of "modular construction" or a "modular frame" within the scope of the '711 and '399 patents need not include the requirement of being "configured in diverse ways."

For example, the specification explains that "Fig. 2 shows an embodiment of a firestop collar 10 with square base face and modular frame 16." ('711 patent at 5:41-42; '399 patent at 5:47-48.) As shown below, Fig. 2 cannot be "configured in diverse ways" (as would be required under STI's proposed construction), but it is constructed of multiple frame parts 17 (colored blue).

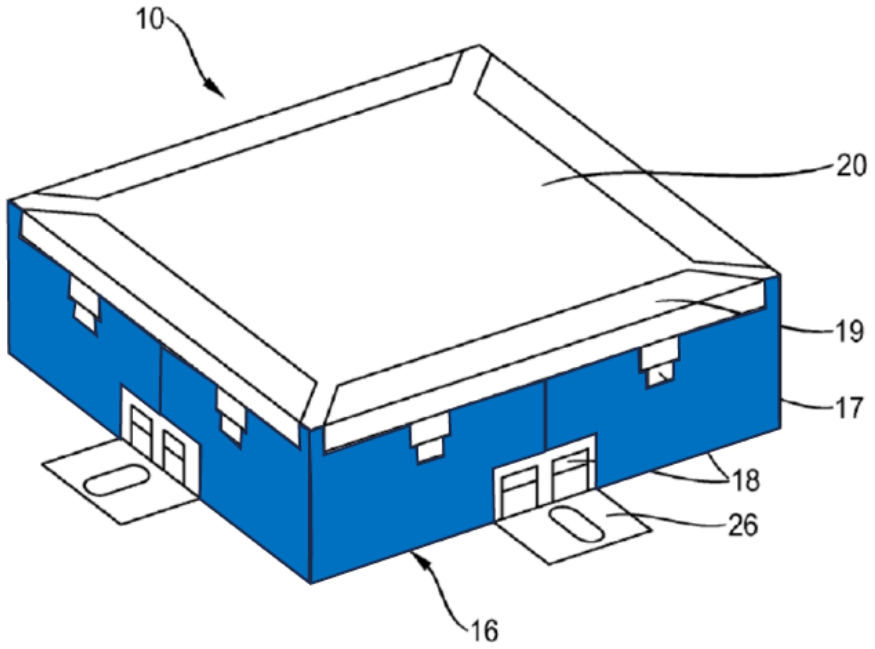

Given that the specification identifies this embodiment as including a "modular frame," a person of ordinary skill in the art ("POSITA") would not understand the

specification to ***require*** that the modular frame be capable of being configured in diverse ways.

In other words, configuration in diverse ways is a possibility of a multipart frame, but not a requirement. The specification further reiterates this point where it states: "On the basis of the modular structure, firestop collar 10 can be configured in diverse ways and adapted to various opening cross sections." ('711 patent at 6:1-4; '399 patent at 6:7-9.) This passage explains that, because the firestop collar 10 is made of multiple parts, it "can be configured in diverse ways." Thus, the firestop collar must be constructed of multiple parts to be considered "modular." Configurability in diverse ways is facilitated by the multi-part structure, but is not required in the context of the '711 and '399 patents.

Indeed, the notion that the claims of the '711 and '399 patents require a "modular frame" or a frame of "modular construction" that can be configured in diverse ways was not referenced by the examiner or Hilti even a single time in any office action or office action response during prosecution of either patent. If the portion of the specification STI identifies were so clear as to limit the claims, a POSITA would have expected some mention of diverse configurability in the file history.[3]

[3] The foregoing arguments are merely examples of the arguments Hilti may make in response to STI's attempt to carry its burden to narrow this claim term.

b. STI's Answering Position

The specification of the '399 and '711 Patents clearly defines "modular frame" and "modular construction": "A frame of modular construction in the firestop collar means in particular that this is constructed from a few common parts and can be configured in diverse ways." '399 Patent, 1:45-47.[4] The Court should adopt this construction, which was explicitly chosen by the inventors acting as their own lexicographers and is consistent with the plain meaning of "modular."

Notably, the specifications explicitly state that the firestop collar's frame is constructed of "a few modular common parts" or "identical frame parts." *Id.*, 1:53-56; 6:3-6. A POSITA would understand from these statements that the few common parts referenced in the definition of "[a] frame of modular construction" comprises modular common, identical parts. Declaration of Joshua Lange ("Lange") (Ex. B) ¶6-10.

"[A] definition of a claim term in the specification will prevail over a term's ordinary meaning if the patentee has acted as his own lexicographer and clearly set forth a different definition." *3M Innovative Properties Co. v. Avery Dennison Corp.*, 350 F.3d 1365, 1371 (Fed. Cir. 2003); *Grace Instrument Indus., LLC v. Chandler Instruments Co., LLC*, 57 F.4th 1001, 1010 (Fed. Cir. 2023) ("[T]he inventor's

[4] The '711 Patent is a continuation of the '399 Patent, and accordingly shares the same Specification. For simplicity, STI cites to the '399 Patent, but the '711 Patent includes the same disclosure.

lexicography governs.") (citation omitted). Here, Hilti argues that the plain meaning of the terms "modular construction"/"modular frame" is "multipart construction"/"multipart frame." But the patentee clearly chose a different definition of "modular frame"/"modular construction" in the specifications by stating: (i) a frame of modular construction comprises a few parts and is configurable in diverse ways, and (ii) the few parts are specifically ***common*** parts. Accordingly, the lexicographer definition controls.

A POSITA would understand that the patentee provided an express definition for "a frame of modular construction" by unambiguously stating what that term "**means in particular**." Lange (Ex. B) ¶11. When a specification states that a term "means" something, the specification is ***defining*** that term. *See Abbott Labs. v. Andrx Pharms., Inc.,* 473 F.3d 1196, 1210 (Fed. Cir. 2007) (explaining that a patent "unambiguously provides definitions" for terms by stating in the specification that the term "as used herein, *means*").

Further, a POSITA would understand that when the claims refer to a "modular frame" and a "modular construction," they both refer to "a frame of modular construction" as described in the specification. Lange (Ex. B) ¶12. This understanding is supported by the following statements in the patents: "the frame (**16**) is of modular construction" ('399 and '711 Patents, Abstracts); and "FIG. 2 shows . . . a firestop collar **10** with modular frame **16**" ('399 Patent, 5:47-48).

Additionally, STI's construction is consistent with the plain meaning of "modular." *See, e.g.*, Ex. C (Random House Webster's Unabridged Dictionary 2d. Ed. at 1237 (1998)) (defining "modular" as "composed of standardized units or sections for easy construction or flexible arrangement") and Ex. D (Webster's II New Riverside University Dictionary at 762 (1994)) (defining "modular" as "designed with standardized units or dimensions for flexible use"); Lange (Ex. B) ¶13.

Hilti argues that these terms should be given their plain meaning, proposing that "'modular', as reflected in the intrinsic record, means 'multipart.'" *Supra* at 2-6. But Hilti's construction is broader than the plain meaning (because not all multipart objects are "modular"), inconsistent with the patentee's explicit definition, and is conclusory and circular.

Hilti ignores the specification's clear definition solely based on unsupported attorney argument, arguing—without evidence—that "Fig. 2 cannot be 'configured in diverse ways.'" *Supra* at 5. Hilti's assertion conflicts with the specification's explanation of FIG. 2: "FIG. 2 shows an embodiment of a firestop collar **10** with square base face and ***modular frame 16***" ('399 Patent at 5:47-48); "***frame 16 is of a modular construction***" (*id.*, Abstract); "[***a***] ***frame of modular construction in the firestop collar means in particular that this*** is constructed from a few common parts and ***can be configured in diverse ways***" (*id.*, 1:45-47); and "on the basis of the

modular construction, ***firestop collar 10 can be configured in diverse ways*** and adapted to various opening cross sections" (*id.*, 6:7-9) (emphases added).

Hilti further argues that FIG. 2 supports its construction because it illustrates a multi-part frame. But this does not negate the patentee's clear and unambiguous definition of "a frame of modular construction." Indeed, the parties agree that a modular frame must be a multi-part frame; they disagree on whether it must also be configurable in diverse ways.

FIG. 2 and the accompanying description support's STI's position. Contrary to Hilti's unsupported assertion, the FIG. 2 embodiment can be "configured in diverse ways." FIG. 2 (shown below) illustrates a firestop collar **10** comprising several identical "frame parts **17**" joined together by "front part **19**" and "fastening brackets **26**." *Id.*, 6:3-13.

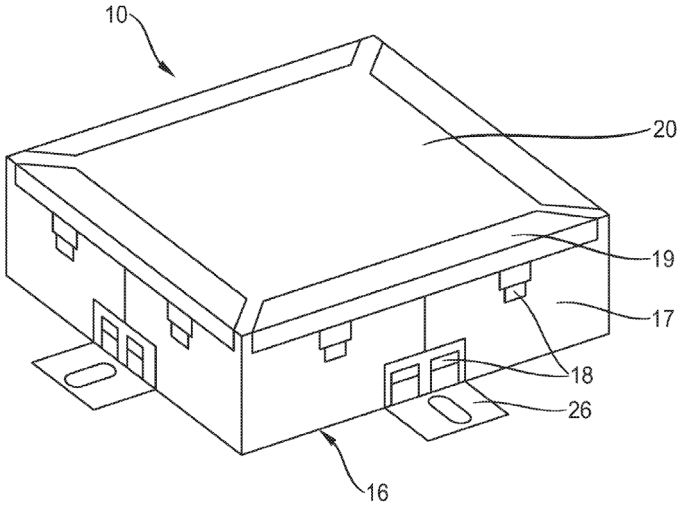

Fig. 2

The specifications state that the firestop collar **10** shown in FIG. 2 has a modular construction and "can be configured in diverse ways." *Id*, 6:7-9. Accordingly, the specifications describe different ways the identical frame parts **17** can be assembled and emphasizes that "[t]his has the advantage that the frame can be adapted individually in place to the opening cross section." *Id.*, 1:47-49. For example, the specifications explain:

> Preferably, frame parts **17** consist of straight sheet-metal pieces, which can be bent at right angles at a predetermined bending point and thus may be optionally used as corner pieces or as straight frame part **17** for frame **16**.
>
> Alternatively, however, it is also possible to construct frame **16** from straight frame parts **17** and to be able to bend front parts

> **16** and/or fastening brackets **26** into corner pieces or to configure them as corner pieces.

Id., 5:61-6:2. Based on this description, a POSITA would understand that various diverse ways of constructing frame **16** from identical frame parts **17** are possible. Lange (Ex. B) ¶14-17.

Finally, the Court should reject Hilti's speculative, unsupported argument that if STI's proposed construction were correct, "a POSITA would have expected some mention of diverse configurability in the file history." *Supra* at 6. Where, as here, the specification clearly defines a term, the Examiner and Applicant both understood what the term meant. There was no need for the Examiner or Applicant to further discuss the meaning of the term during prosecution. There is simply no support for Hilti's speculative assertion. Lange (Ex. B) ¶18-19.

c. Hilti's Reply Position

STI agrees with Hilti's construction inasmuch as it requires a frame of multipart construction, but argues (*supra* at 7-8) that Hilti lexicographically narrowed this term. "So long as the meaning of an expression is made reasonably clear ***and its use is consistent within a patent disclosure***, an inventor is permitted to define the terms of his claims."[5] *Intellicall, Inc. v. Phonometrics, Inc.*, 952 F.2d 1384, 1388 (Fed. Cir. 1992) (citation omitted). Here, because Hilti did not

[5] Emphasis herein is added unless otherwise indicated.

consistently use the term "modular frame" to require a multipart frame that "can be configured in diverse ways," it did not lexicographically define the term in the manner asserted by STI. *See Collins v. Nissan N.A., Inc.*, 2013 WL 448923, at *8 (E.D. Tex. Feb. 6, 2013) (declining to find lexicography based on the "seemingly definitional phrase 'hereinafter referred to as'" where the alleged definition was inconsistent with the specification).

Instead, the specification consistently uses the phrase "modular frame" to include devices that cannot be configured in diverse ways, as explained in Hilti's Opening Position (*supra* at 8-9). To argue otherwise, STI relies (*supra* at 8-9, 12) on Mr. Lange's declaration. However, during his deposition, Lange confirmed that, for the device of Fig. 2 to be configured in diverse ways, it would need to be disassembled and modified to add/remove parts and/or to "swap" the location of parts. Ex. J at 25:1-20. In other words, Fig. 2 would need to be modified to be a ***different*** device to include a frame that "can be configured in diverse ways." Absent such modification, STI identifies no manner in which the multipart frame of Fig. 2 "can be configured in diverse ways."[6] Accordingly, defining "modular" in the way proposed by STI is inconsistent with the "modular" specification embodiments.

[6] Lange took the mistaken position that the claimed invention requires "assembly" (Ex. J at 25:15-20). While "making" the claimed device is within claim 1's scope, claim 1 also covers a preassembled device.

Elsewhere, the specification explains that "it is possible . . . to imagine an embodiment (not illustrated) with two or three blocks 20 of optionally intumescent material and a corresponding number of respectively six or eight frame parts 17, front parts 19 and fastening brackets 26." ('399 patent at 6:9-14). Such a frame "can be configured" in diverse ways while the frame is being constructed, but once the device is constructed (as in the embodiment of Fig. 2) it cannot be configured in diverse ways. Hilti's proposed "multipart construction" embraces all specification embodiments.

STI attempts (*supra* at 7) to take the alleged lexicography one step further by arguing that "common parts"—as STI uses the phrase in its proposed construction—means "identical frame parts" citing to paragraph 10 of Lange's declaration. But Lange's cited portions of the specification, which are separated by multiple columns, simply do not say that a "few common parts" means a "few identical frame parts." Perhaps for that reason, Lange retreated to the position that he did not have an opinion on the issue. Ex. J at 14:23-15:5.

Finally, STI argues (*supra* at 9) that its "construction is consistent with the plain meaning of 'modular.'" Even if true (it is not), this undermines STI's lexicography argument because lexicography is used to "clearly set forth a definition of the disputed claim term ***other than*** its plain and ordinary meaning." *Hill-Rom Servs., Inc. v. Stryker Corp.*, 755 F.3d 1367, 1371 (Fed. Cir. 2014). Moreover, STI's

general purpose dictionary definition is inapposite in referring to modular living room furniture. *See* Ex. C (referring to "modular sofa"). The device at issue is not a sofa.

d. STI's Sur-Reply Position

Hilti's reliance on *Collins* is misplaced because the patentee there provided two different express definitions of the disputed term in different sections of the patent. Each party proposed a different competing definition, and the Court rejected both because there was not a "'reasonably clear,' 'consistent' lexicography." *Collins*, 2013 WL 448923, at *7-8. By contrast, the patentee here provided one clear definition in the specification.

Further, the specification does not refer to devices that are not configurable in diverse ways as having a "modular frame." Hilti repeats its mistake (at 13-14) that FIG. 2 is not configurable in diverse ways and would need to be "modified to be a different device." To make this argument, Hilti incorrectly assumes, without support, that a device is not configurable in diverse ways if it needs to be disassembled.

Indeed, the device of FIG. 2 is configurable in diverse ways even without adding parts. For example, two of the four bent frame parts 17 could be straightened out (and the corresponding front parts 19 and fastening brackets 26 bent) such that two of the ends are formed by half of a frame part 17 and the other two sides are

formed by one-and-a-half frame parts 17. In the following annotated FIG. 2 and corresponding illustration showing the frame in this different configuration, the purple frame part (and the corresponding opposite frame part (not shown)) has been unbent:

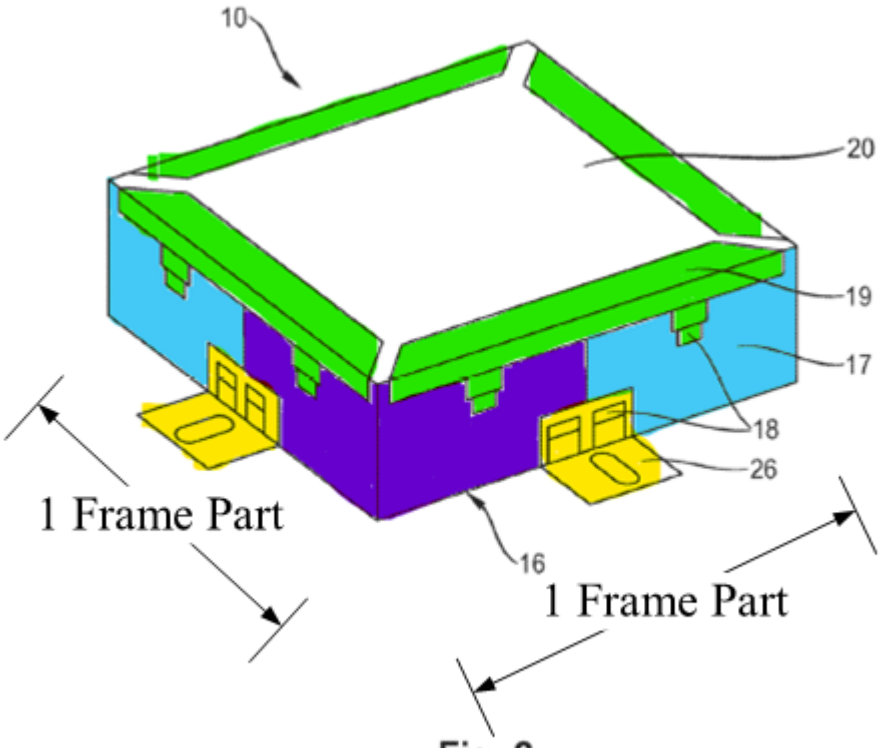

Fig. 2

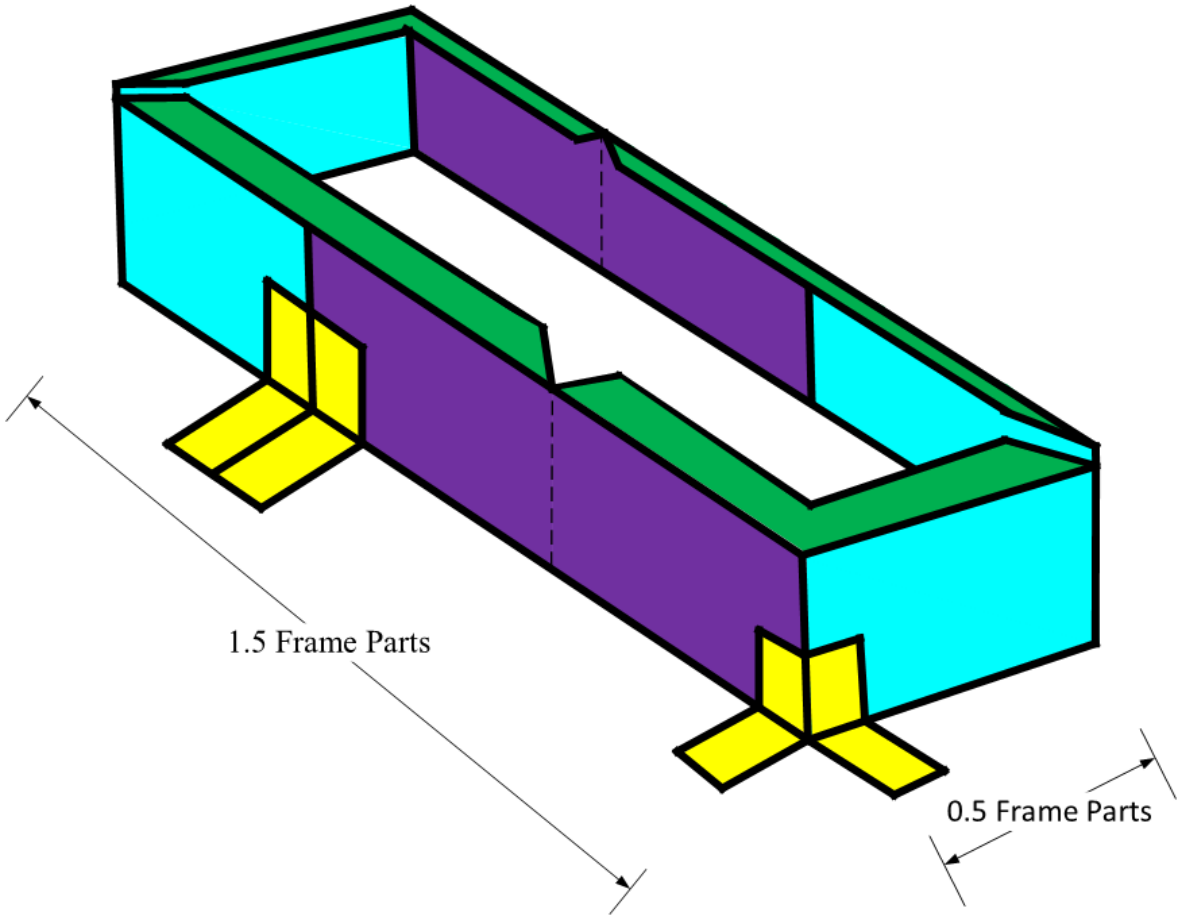

The ’399 specification supports this by explaining that the frame can be constructed of straight or bent parts. ’399 Patent at 5:59-6:2 (“[F]rame parts 17...can be bent at right angles…and thus may be optionally used as corner pieces or as straight frame part 17....Alternatively,...it is also possible to construct frame 16 from straight frame parts 17 and…to bend front parts 16 [sic] and/or fastening brackets 26 into corner pieces or to configure them as corner pieces.”).

Additionally, that STI’s construction is consistent with a plain meaning of “modular” does not undermine STI’s lexicography argument. While lexicography

is often described as one way to deviate from the plain meaning, a patentee is not foreclosed from defining a term consistent with a plain meaning of the term. *See Rexnord Corp. v. Laitram Corp.*, 274 F.3d 1336, 1342 (Fed. Cir. 2001) ("[P]atent law permits [a patentee to set forth a] definition for a claim term that ***could*** differ in scope from that which would be afforded by its ordinary meaning.").

Finally, STI's dictionary definition's reference to a "modular sofa" is merely an example of a modular device presented in the definition; the definition is plainly not specific to furniture.

2. "a first direction" and "a second direction"

	Hilti	**STI**
"first direction"	This term should be construed according to its plain meaning, as informed by the intrinsic record, which is "a direction different than the second direction." If this term is not construed according to its plain and ordinary meaning, it should be construed as Hilti proposes based on the intrinsic record.	"a downward pointing direction extending along a y-axis"
"second direction"	This term should be construed according to its plain meaning, as informed by the intrinsic record, which	"a direction extending along an x-axis from the front of the device to the back of the device closest to the wall or ceiling"

	is "a direction through which a building feature passes." If this term is not construed according to its plain and ordinary meaning, it should be construed as Hilti proposes based on the intrinsic record.	

a. Hilti's Opening Position

These terms appear in claim 1 of the '091 patent. Hilti proposes that the terms be construed according to their plain and ordinary meaning in view of the intrinsic record. STI seeks a narrow construction that departs from the plain and ordinary meaning. As set forth below, once the "second direction" is defined, the "first direction" is simply "a direction different than the first direction." (*See, e.g.*, '091 patent at 6:36-37 ("the second direction crossing the first direction").)

Before turning to the parties' dispute, some background is useful. Claim 1 of the '091 patent recites a firestop apparatus including layers that comprise passageways. An embodiment of claim 1 is shown in Figure 1 below.

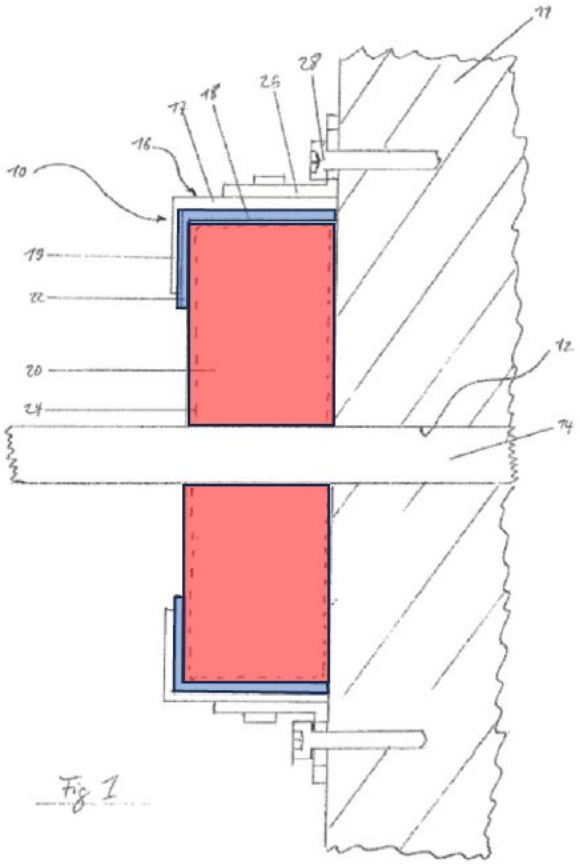

(*Id.* at Fig. 1 (annotated).)

Intumescent inlay 22 (colored blue) is one layer. Another layer is intumescent block 20 (colored red). An intumescent material foams in response to fire and can act to close off a passageway to prevent the transfer of fire from one room to another. (*Id*. at 2:45-54.) Both intumescent layers have an opening that forms a passageway to allow for the firestop apparatus to be fitted around a pipe or other conduit. (*Id*. at 6:40-47.) Most often, this type of device would be used in a "retrofit" application to firestop a preexisting pipe or other building structure. The passageways allow the

device to close around and surround the building feature (*e.g.*, pipe, conduit, etc.). (*Id.*)

Claim 1 recites that "the first layer comprises a first passageway and the second layer comprises a second passageway" and further that "the first passageway and the second passageway [are] aligned in a second direction." (*Id.* at 6:27-30.) Claim 1 also recites that "an end of the first layer and an end of the second layer extend in a first direction beyond an edge of the frame defining the opening." (*Id.* at 6:33-35.) Thus, claim 1 recites both a "first direction" and a "second direction."

In order for the first passageway and second passageway to function as passageways, they must allow for the passage of a building feature such as a pipe. A POSITA would understand that, for the passageways to be aligned in the same "second direction," that direction would be a direction through which a building feature passes. As such, the plain meaning of the "second direction" is "a direction through which a building feature passes."

STI does not dispute that the "second direction" is the direction that extends through the device. However, STI argues that "a second direction" should be construed to mean "a direction extending along an x-axis from the front of the device to the back of the device closest to the wall or ceiling." (JCCC at p. 13.) The parties generally agree that the "second direction" is the direction through which a building feature such as a pipe would extend. However, STI attempts to further narrow that

direction to require that the direction extends only from the front of the device to the back of the device. There is no disclaimer or lexicography that would exclude the second direction extending in either direction, from front to back or back to front.

Another problem with STI's construction is that the concept of x and y axes is a matter of perspective that depends on the orientation and location of the installed device. To illustrate, consider the images below. On the left, the device (blue) is installed on a wall (yellow). In the image on the right, the device (blue) is installed on the ceiling (yellow).

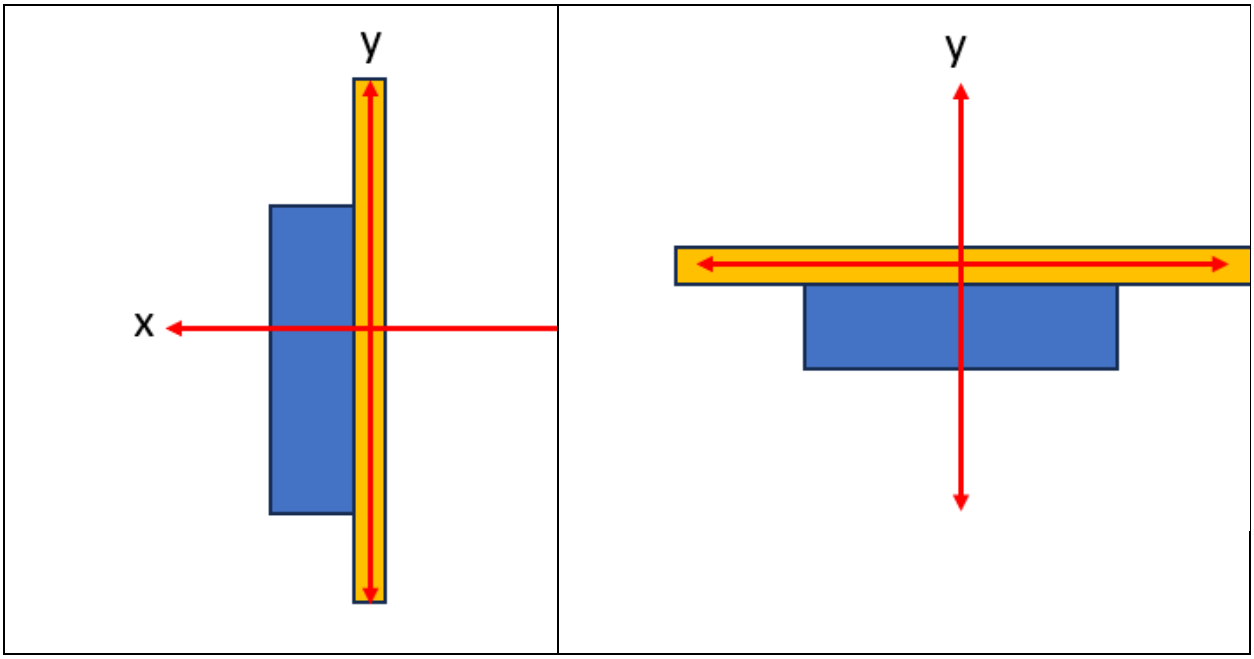

The x-axis is illustrated by the horizontal red arrows, and the y-axis is illustrated by the vertical red arrows. These two axes illustrate the traditional x-y coordinate system. When the device is installed on a wall, STI's identification of an x-axis is applicable (subject to the front to back and back to front issue mentioned

above). However, when the device is installed on a ceiling, what STI has identified as the x-axis (*i.e.*, the axis from the front of the device to the back) has become the y-axis. In other words, STI would need to constantly transpose or redefine the traditionally understood x-y coordinate system in order for its construction to apply based on various installation locations (*e.g.*, ceiling, angled wall, etc.).

As shown above, STI's construction does not provide an objective definition against which claim scope can be measured and instead will only cause confusion. The concept of an x-axis, while useful for illustrative purposes in connection with a particular installed configuration, is not an appropriate way to ***define*** the subject claim term. Additionally, Hilti respectfully submits that the concept of an x-y coordinate system may not be a familiar one to all jurors, let alone a constantly shifting coordinate system, providing an additional reason for the Court to reject STI's construction. Rather, as explained above, the "second direction" is simply "a direction through which a building feature passes." This will apply regardless of the orientation of the device (*e.g.*, wall, ceiling, angled wall, etc.).

Turning to the other "direction" term, a POSITA would understand the plain meaning of a "first direction" in the context of the intrinsic record to be "a direction different than the second direction." (JCCC at p. 12.) In the context of the claims, and in view of the embodiments described in the specification, this ***could*** be the

vertical direction (*i.e.*, up and down, or just downward, as required by STI's proposed construction), but it would not necessarily be limited to that direction.

STI's proposed construction of "first direction" as "a downward pointing direction extending along a y-axis" suffers from similar infirmities as its construction for "second direction." For one thing, there is no basis to limit the first direction to a downward direction as opposed to a vertical direction (*i.e.*, up and down or down and up). For another, STI's construction invites the same perspective problem discussed above with respect to the "second direction" and its inclusion of "x-axis." Rather than complicating matters for the jury with a construction referencing the y-axis, the term "first direction" should be construed according to its plain meaning, which is "a direction different than the second direction." In the simplest sense, the claims were merely relying on two different directions that, for convenience, were called the "first direction" and "second direction." Because claim 1 sets forth the orientation of the "second direction," the "first direction" is just a different direction. That is all.

b. STI's Answering Position

The Court should construe "first direction" as "a downward pointing direction extending along a y-axis," and "second direction" as "a direction extending along an x-axis from the front of the device to the back of the device closest to the wall or ceiling." STI's constructions are consistent with the patent Applicant's own explicit

definitions of these terms. Hilti's construction, by contrast, is overly broad, confusing, and unhelpful.

Critically, the Applicant explicitly defined the "first direction" and "second direction" during prosecution of the '091 Patent to overcome a rejection based on the prior art, informing the meaning of those terms and/or disclaiming other possible meanings—including Hilti's constructions. It is well-established that "statements [during prosecution] may offer interpretative assistance to the court in construing a particular claim." *Prima Tek II, L.L.C. v. Polypap, S.A.R.L.*, 318 F.3d 1143, 1149 (Fed. Cir. 2003). "Where an applicant argues that a claim possesses a feature that the prior art does not possess in order to overcome a prior art rejection, the argument may serve to narrow the scope of otherwise broad claim language." *Seachange Int'l, Inc. v. C-COR, Inc.*, 413 F.3d 1361, 1372–73 (Fed. Cir. 2005); *see also Omega Eng'g, Inc, v. Raytek Corp.,* 334 F.3d 1314, 1323–24 (Fed. Cir. 2003) ("[P]rosecution disclaimer . . . preclud[es] patentees from recapturing through claim interpretation specific meanings disclaimed during prosecution.").

Specifically, during prosecution, the Examiner rejected claim 15 (which recited "first" and "second" directions) as anticipated by U.S. Patent No. 5,452,551 ("Charland"). In response, the Applicant amended claim 15 and distinguished it from Charland. In doing so, the Applicant provided an annotated figure clearly labelling (thus explicitly defining) the first and second directions as shown below:

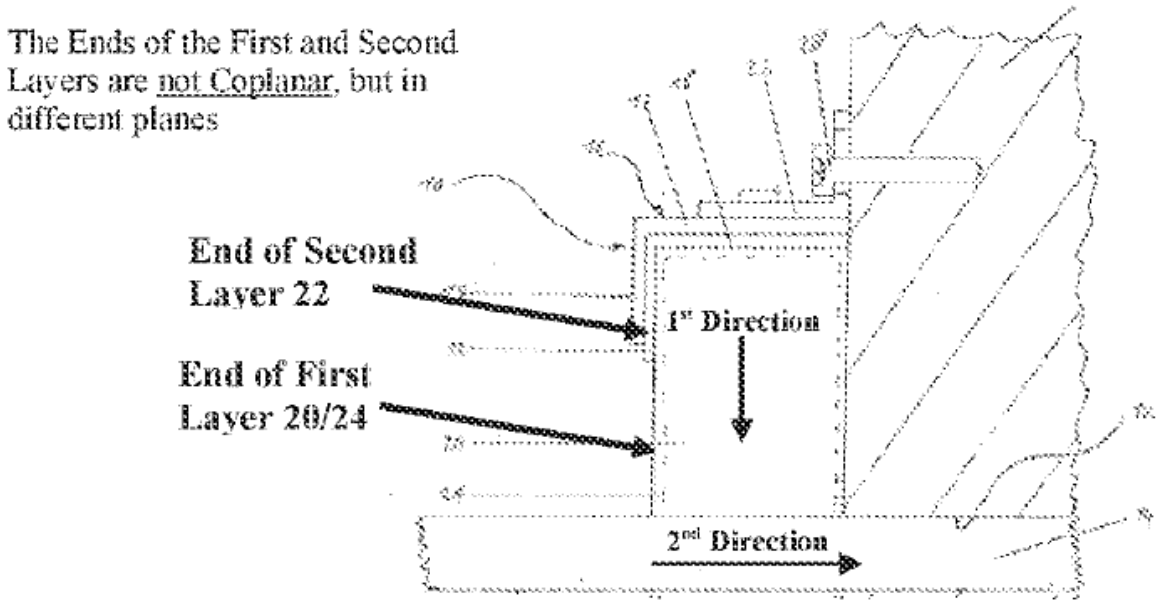

In this annotated FIG. 1, the Applicant clearly identified the "first direction" as a downward pointing direction on the y-axis and the "second direction" as a direction on the x-axis extending from the front to the back of the device closest to the wall or ceiling. Ex. E. ('091 Patent File History, Reply to Office Action, Dec. 10, 2020).

The Applicant then applied its explicit definition of "second direction," distinguishing the amended claim over Charland. The Applicant provided an annotated figure from Charland, clearly labeling the "second direction" as extending on the x-axis from the front to the back of the device closest to the wall or ceiling, as shown below:

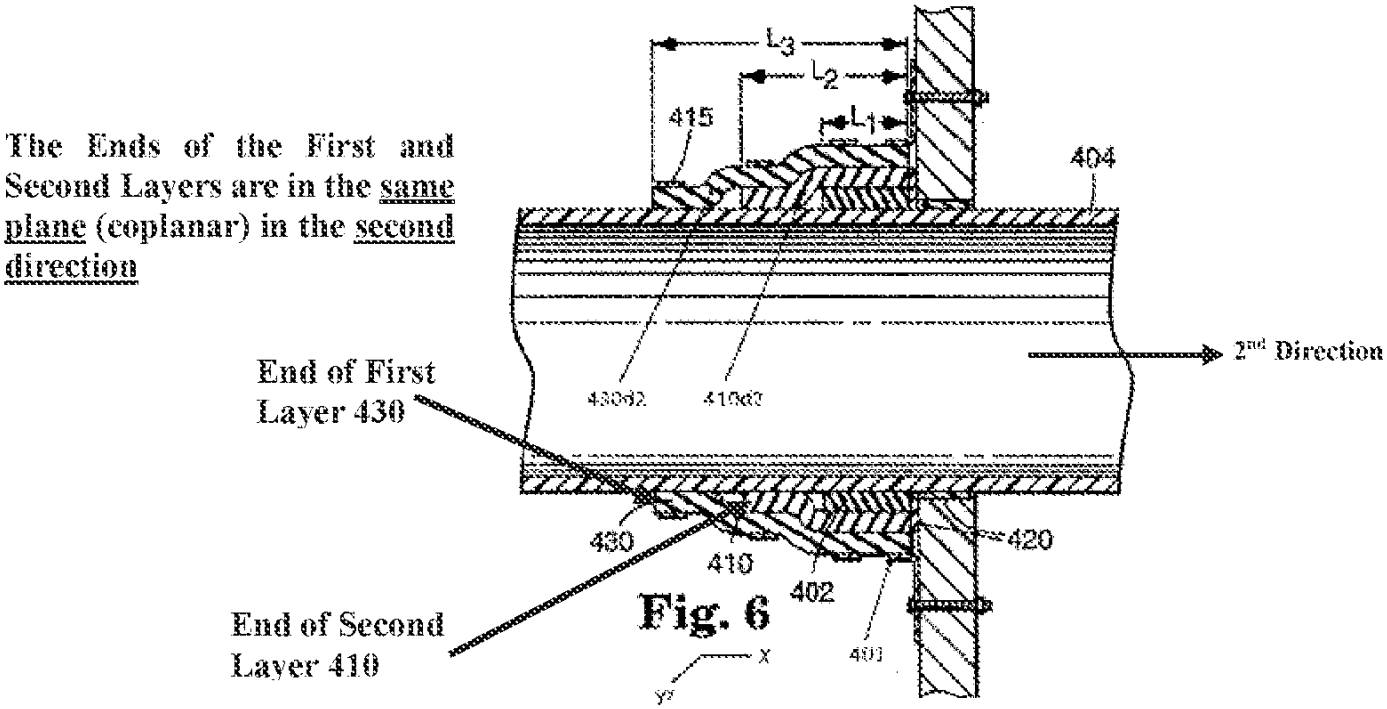

Fig. 6

The Applicant then argued that the annotated Charland figure shows "the ends of the first and second layers 430 and 410 are in the same plane (coplanar) in a plane extending in the second direction." Ex. E (Reply to Office Action, Dec. 10, 2020 at 6). To further illustrate this point for the Court, the Charland figure is provided again below, with additional colored annotations added by STI, including the x-axis and "2nd Direction" highlighted in green, and a red line illustrating that the ends of the first and second layers (circled in blue) are coplanar in the second direction.

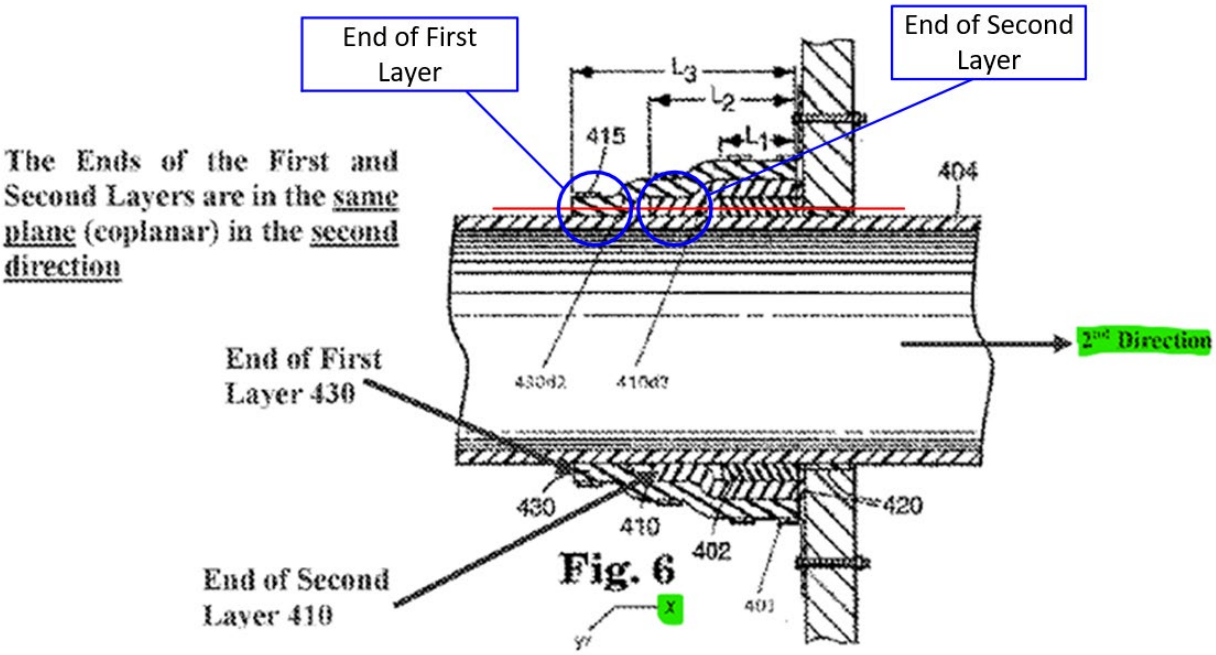

The Applicant then distinguished its amended claim 15 from Charland, arguing that "the Charland patent also does not disclose feature 2) of amended claim 15, namely that "the end of the first layer and the end of the second layer '<u>are offset in the second direction so as to be in different planes</u>.'" *Id. See also* Applicant's annotated Fig. 1, with additional color coding and annotations provided by STI:

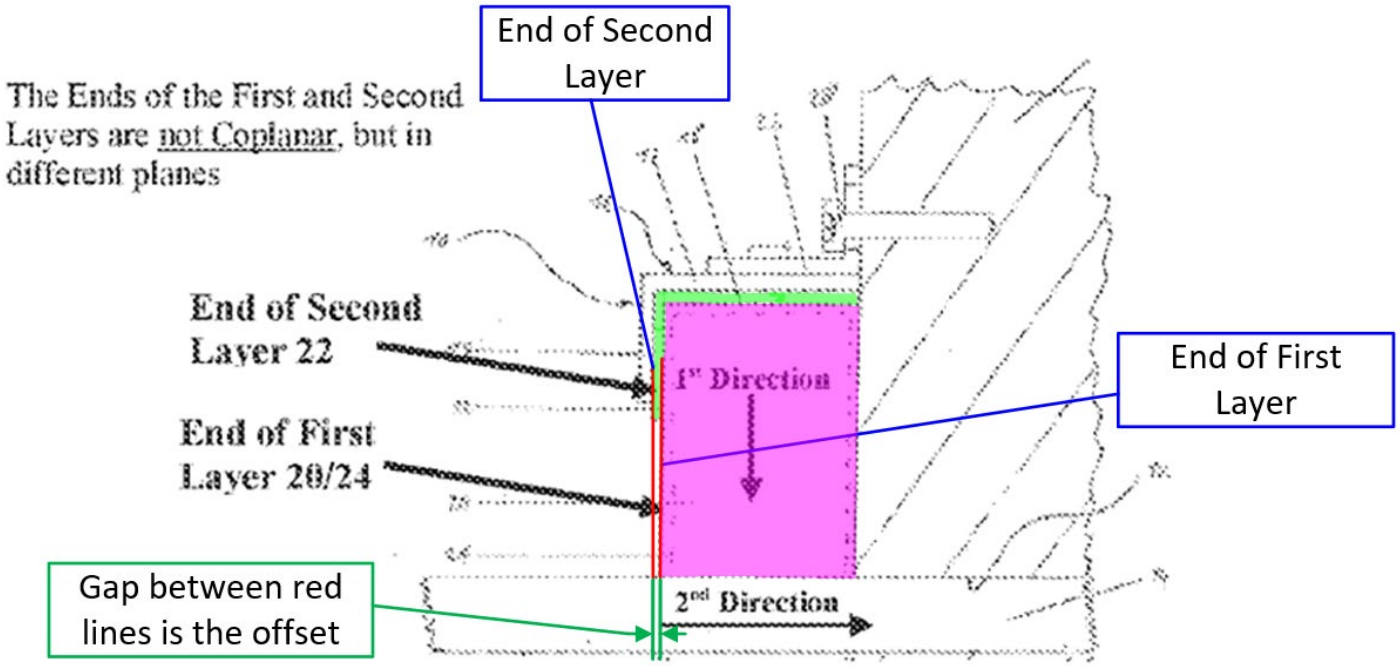

Lange (Ex. B) ¶20-26.

Accordingly, the Applicant clearly defined the "second direction" as "a direction extending along an x-axis from the front of the device to the back of the device closest to the wall or ceiling." The Applicant used these annotated figures and arguments to emphasize that these elements (the end of the first layer and end of the second layer "are offset in the second direction so as to be in different planes") were not disclosed in Charland.

Hilti's construction should be rejected. First, Hilti ignores the clear definitions given by the patentee during prosecution to avoid prior art. Second, Hilti's construction does not limit "a second direction" to a **single** direction. Rather, Hilti's construction—"a direction through which a building feature passes"—is not defined

with reference to any structural features of the claimed apparatus, and therefore does not give a POSITA any further understanding of the "second direction" than the term "direction" alone. *See* Lange (Ex. B) ¶27.

Hilti's construction improperly injects into claim 1 the phrase "building feature," adding confusion and ambiguity to the claim and rendering it indefinite. Because a building feature can "pass through" the device in multiple directions, Hilti's construction obscures ***which*** direction refers to the "second direction." *See id*. Moreover, Hilti's argument that the "second direction" could extend from the front to the back of the device, or vice versa (i.e., in two directions) further highlights the indefiniteness problem introduced by Hilti's construction. A "direction" is correctly illustrated by a line having a single arrow. *See id.* ¶28. Defining "a [first or second] direction" – which is singular - as pointing in two opposite directions is nonsensical. A double-sided arrow points in **two** opposing directions, not a single first or a second direction. For example, a person can walk forward ***or*** backwards—but not both at the same time.

Furthermore, Hilti's construction improperly imports limitations from dependent claim 2 into claim 1, rendering claim 2[7] redundant, circular and nonsensical, which should be avoided. *See AIA Eng'g Ltd. v. Magotteaux Int'l*, 657

[7] Claim 2 recites, in part, "the opening allows a building feature to pass through in the second direction."

F.3d 1264, 1276 (Fed. Cir. 2011) ("We strive . . . to avoid nonsensical results in construing claim[s] . . ."); *Wright Med. Tech., Inc. v. Osteonics Corp.*, 122 F.3d 1440, 1445, (Fed. Cir. 1997) ("we must not interpret an independent claim in a way that is inconsistent with a claim which depends from it"). When "second direction" in claim 2 is replaced with Hilti's construction, the relevant part of claim 2 reads: "wherein: the opening allows a building feature to pass through in the [direction through which a building feature passes]." This result does not help a POSITA determine the scope of the direction terms and only serves to make the claims more confusing. *See* Lange (Ex. B) ¶29.

Hilti further argues that STI's construction does not work when the device is installed on a ceiling because the x and y axes would be reversed. This argument not only ignores a part of STI's construction, but also ignores basic principles of coordinate systems. First, STI's construction explicitly defines the x-axis according to the location where the apparatus is installed—i.e., on the ***wall*** or ***ceiling***. Accordingly, the below images Hilti relies on (and the accompanying argument) are incorrect. Hilti's right-most image (below) mislabels the x and y axes based on STI's construction.

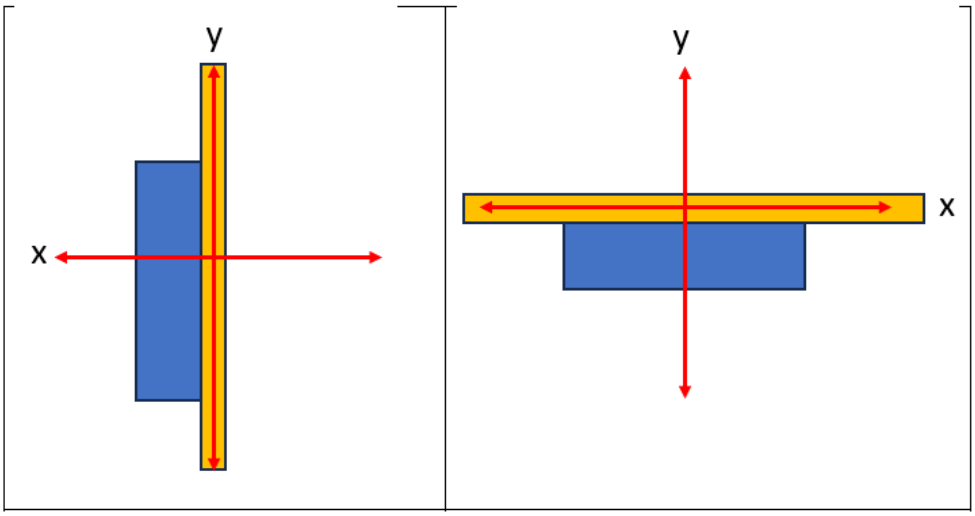

Supra at 22. Instead, under STI's construction, the vertical axis is the x-axis because it extends "from the front of the device to the back of the device closest to the wall or **ceiling**." *Supra* at 18-19. The below images include properly labeled axes:

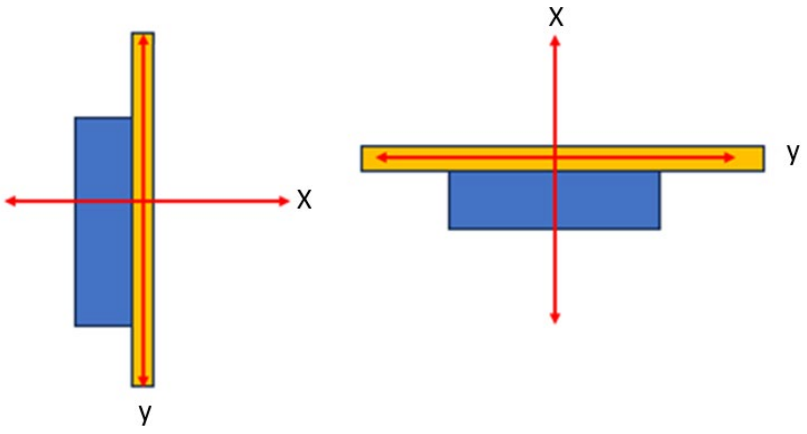

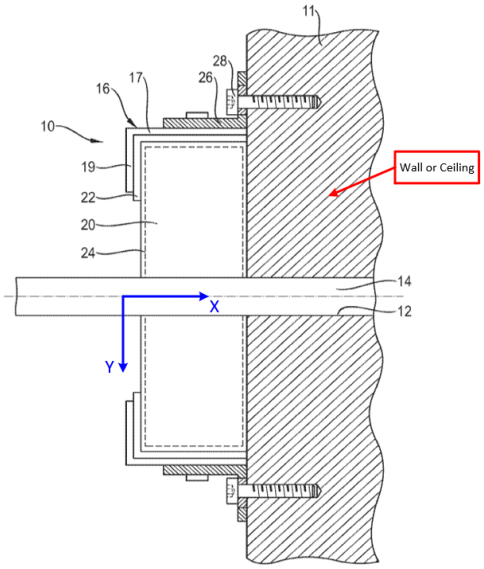

Fig. 1

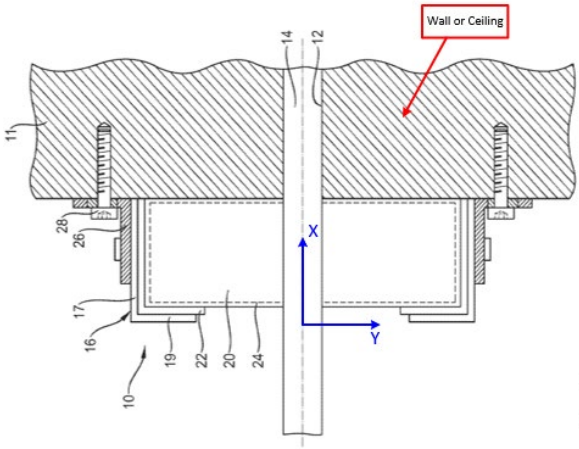

Fig. 1

Lange (Ex. B) ¶30-31. Thus, Hilti's argument that the x-axis becomes the y-axis when the device is installed on the ceiling is wrong. *See id.* This is because the traditional x-y coordinate system is not fixed in space (*id.*) or universally defined such that the x-axis must always be horizontal (or otherwise particularly oriented in every situation). *See* Ex. F, Peter Dourmashkin, *Classical Mechanics* at 3.2.1 (2023) (explaining that coordinate system includes a "choice of origin" and "choice of axes"); Lange (Ex. B) ¶31. Instead, the orientation of the x-y coordinate system can vary based on a reference. *See* Lange (Ex. B) ¶31. Here, the reference is the claimed apparatus and the x-y coordinate system is used to easily reference axes of the apparatus. *See id.* The coordinate system is always defined relative to the apparatus, and thus does not need to be "constantly transpose[d] or redefine[d]." *Supra* at 23. Hilti's attorneys' arguments also speculate on what a POSITA would understand, but provide no evidence to support those assertions.

c. Hilti's Reply Position

STI argues (*supra* at 24-30) that the term "***a*** second direction" should be limited to a ***single*** direction "extending along an x-axis from the front of the device to the back of the device closest to the wall or ceiling." STI invites error: "That 'a' or 'an' can mean 'one or more' is best described as a ***rule***, rather than merely as a presumption or even a convention." *Baldwin Graphic Sys., Inc. v. Siebert, Inc.*, 512 F.3d 1338, 1342-43 (Fed. Cir. 2008). Accordingly, claim 1's recitation of "***a*** second direction" includes one or more directions.

The claim's recitation of "***a*** second direction" makes sense in view of the surrounding claim language, which recites "first" and "second" passageways that are aligned in "***a*** second direction." Those passageways are aligned in a through direction, which includes both front-to-back and back-to-front directions, as shown below:

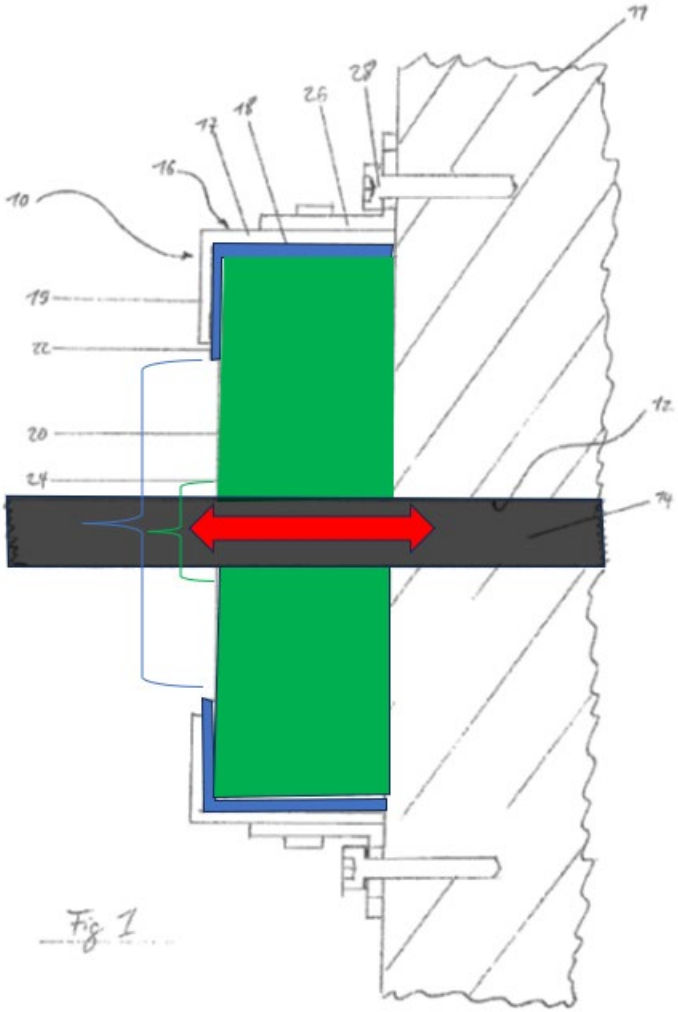

’091 patent at Fig. 1 (annotated).

The passageways of the first and second layers are indicated with blue and green brackets, respectively. These passageways align both front-to-back and back-to-front as shown by the bi-directional red arrow on the black cable. Accordingly, the claim refers to “***a*** second direction” because a cable extends front-to-back and back-to-front through the passageways.

Rather than grapple with the settled rule that "a" refers to one ***or more***, STI invokes (*supra* at 25-26) an alleged disclaimer with reference to the below-figure from the file history, which Hilti annotated during prosecution as an "example."

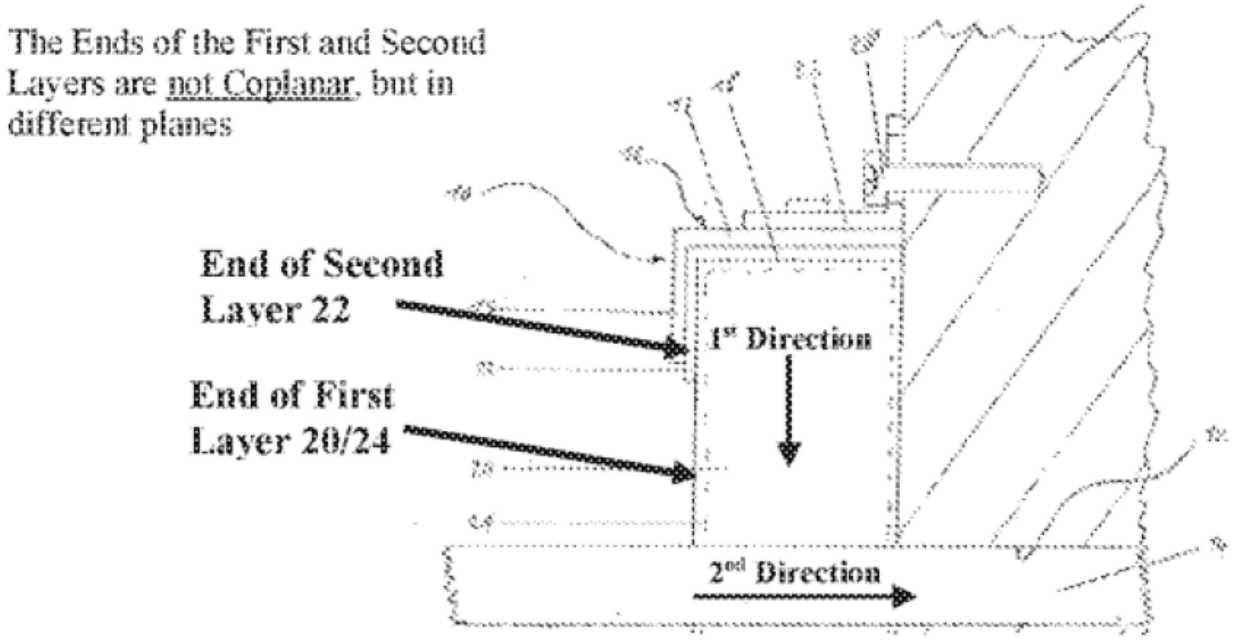

Ex. M at 27.

In an attempt to find a definition where none exists, STI omits the following (now highlighted by Hilti), which appears immediately above the figure in the file history.

2) the end of the first layer and the end of the second layer "are offset in the second direction so as to be in different planes." These features are supported, for example, by Figure 1, an annotated version of which is reproduced in relevant part below.

Id. Thus, Hilti made clear that it identified "***example***" written description support for the underlined amendatory language. An "example" is not a clear and unmistakable definition.

The rest of Hilti's response is consistent with "a second direction" referring to front-to-back and back-to-front (*i.e.*, ***a*** through direction). With reference to the Charland reference, Hilti argued that "the ends of the first and second layers 430 and 410 are in the same plane (coplanar) in a plane extending in the second direction." *Id.* at 28. The annotated figure below illustrates that "plane."

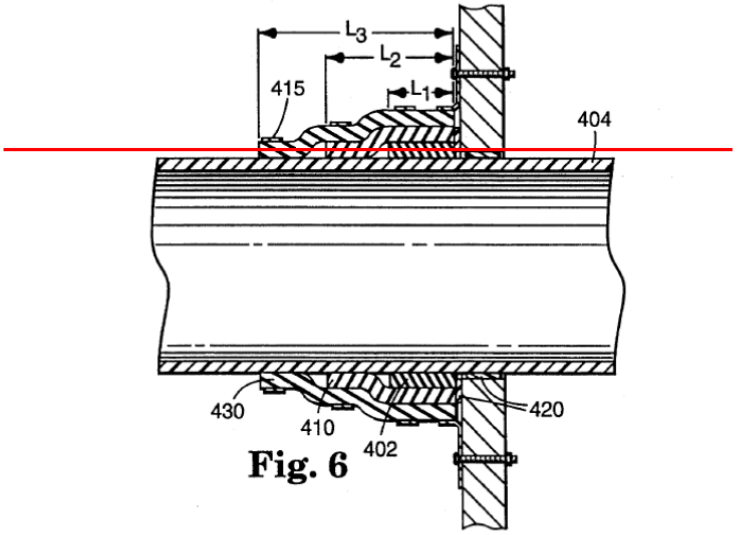

Fig. 6

Ex. J at 36:13-24; Ex. O.

As Lange acknowledged during his deposition, "a plane is a surface that extends infinitely, so thereby it extends in all directions along that surface." Ex. J at 36:22-24. Consequently, in referring to "a plane extending in the second direction," a POSITA understands that Hilti referred to a through direction of the plane, which

"extends in all directions along that surface" and includes both front-to-back and back-to-front.

STI's attempt to limit "a second direction" to the single direction extending front-to-back is further inconsistent with the file history of the '417 patent (the parent of the continuation '091 patent), which also claims "a second direction." '417 patent at 6:13. During prosecution of the '417 patent, Hilti included the below-figure to illustrate another example of a second direction:

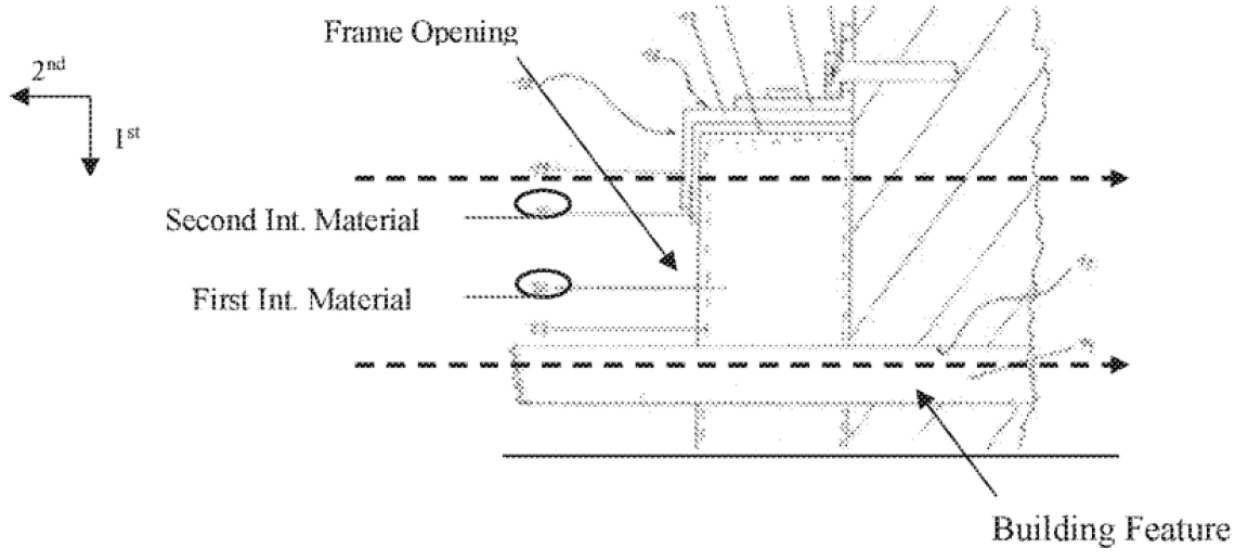

Ex. L at 32.

As shown in this example, Hilti identified an example of a second direction that extends from back-to-front. This through direction is a "second direction" just like "a second direction" in claim 1 of the '091 patent is a through direction.

STI also incorrectly argues (*supra* at 30) that Hilti's construction of "***a*** second direction" would render "***the*** second direction" recited in claim 2 "redundant, circular, and nonsensical." STI confuses "a second direction" with claim 2's recitation of "the second direction." By the time "the second direction" is recited in claim 2, "a second direction" from claim 1 has been narrowed to a single through direction. Thus, Hilti's construction of "a second direction" would not apply to claim 2 and STI's critique falls flat.

STI's construction of "a first direction" is equally flawed because it invokes the same non-existent disclaimer based on the "example" Hilti annotated in the file history. Rather than being limited to a single downward direction, "***a*** first direction" includes one or more directions that are different than the second direction.

Finally, STI's arguments (*supra* at 31-33) concerning the x-y coordinate system confirm that STI's proposed construction creates unnecessary complexity. Indeed, STI admits that "the traditional x-y coordinate system is not fixed in space [] or universally defined such that the x-axis must always be horizontal (or otherwise particularly oriented in every situation)." Construing the term to require a shifting coordinate system would only serve to complicate matters, while assuming each juror would be familiar with the x-y coordinate system.

d. STI's Sur-Reply Position

Hilti's reliance on *Baldwin* fails, as "*Baldwin*…does not set a hard and fast rule that 'a' always means one or more than one." *Harari v. Lee*, 656 F.3d 1331, 1341 (Fed. Cir. 2011). The claim terms "a first direction" and "a second direction" can each refer only to one direction. If they encompassed "one or more directions," they would not limit the claims at all because they could then cover *any and all* directions, essentially reading them out of the claims. Under STI's more reasonable interpretation, the article "a" merely provides antecedent basis for "the first/second direction" later in claim 1.

Additionally, basic grammar suggests that "first" and "second" each modify one *singular* direction. *See Copperhead Indus., Inc. v. Changer & Dresser, Inc.*, 2020 WL 429484, at *9 (N.D. Ala. Jan. 28, 2020) (finding that "a turning and axial extraction movement" is a single movement, because "basic grammar suggests that 'turning and axial' modify and describe the type of single movement."). The "rule" Hilti relies on permits "the presence of more than one of the objects following that indefinite article." *In re Varma*, 816 F.3d 1352, 1362 (Fed. Cir. 2016). Hilti misapplies the rule by incorrectly suggesting that the indefinite article converts a singular object ("a first/second direction") into multiple objects (a first/second direction that itself can encompass multiple directions).

Further, contrary to Hilti's assertion (*supra* at 36-37), the Applicant's annotated Figure 1 was not merely an "example" of the first/second directions. Rather, the Applicant identified Figure 1 as one "example" in the specification that supports the amended claim language; in so doing, the Applicant clearly defined the first/second directions by annotating the Figure.

Hilti's argument (*supra* at 37-38) regarding the plane drawn on the Charland figure is also flawed. The fact that "**a plane** extending in the second direction" radiates in all directions along the plane's surface does not mean that the "second direction" itself also extends in multiple directions.

Moreover, the '417 patent's file history does not establish that the "second direction" of the '091 patent points in two directions. The Applicant identified a ***singular*** "2nd direction" during the '417 prosecution, just as it did during the '091 prosecution. In any event, STI based its construction on the '091 arguments to preserve validity. Otherwise, the claim is indefinite for covering two opposing directions.

The Court should also reject Hilti's argument (*supra* at 39) that, "[b]y the time 'the second direction' is recited in claim 2, 'a second direction' from claim 1 has been narrowed to a single through direction," as it ignores that claim 1 already recites "the second direction."

Finally, the coordinate system in STI's construction does not "create[] unnecessary complexity." It is not a "shifting coordinate system"; it is fixed relative to the claimed apparatus. Including the x-y axes simplifies and standardizes the constructions.

3. "the first intumescent material" and "the first and second intumescent materials"

Hilti	STI
Not indefinite	This claim limitation renders claim 1 indefinite under 35 U.S.C. § 112(b).

a. Hilti's Opening Position

STI argues that the inclusion of these terms in claim 1 of the '417 patent renders that claim indefinite. (JCCC at p. 11.) It is STI's burden to prove indefiniteness by clear and convincing evidence. *Microsoft Corp. v. i4i Ltd. P'ship*, 564 U.S. 91, 95 (2011). STI will be unable to carry its burden because the scope of claim 1 of the '417 patent is capable of being understood with reasonable certainty. *See Nautilus, Inc. v. Biosig Instruments, Inc.*, 572 U.S. 898, 912 & n.10 (2014). Once STI attempts to make its initial showing on its invalidity defense, Hilti will respond in greater detail, including possibly with expert testimony.

b. STI's Answering Position

These claim limitations render claim 1 indefinite under 35 U.S.C. § 112(b). Whether a claim meets the "definiteness requirement . . . is a matter of claim

construction." *Noah Sys., Inc. v. Intuit Inc.*, 675 F.3d 1302, 1311 (Fed. Cir. 2012). Claims are indefinite if they "fail to inform, with reasonable certainty, those skilled in the art about the scope of the invention." *Nautilus,* 572 U.S. at 901. "Even if a claim term's definition can be reduced to words, the claim is still indefinite if a [POSITA] cannot translate the definition into meaningfully precise claim scope." *Halliburton Energy Servs., Inc. v. M-I LLC*, 514 F.3d 1244, 1251 (Fed. Cir. 2008).

Claim 1 is indefinite because these limitations lack antecedent basis and it is unclear to what exactly the terms refer. Accordingly, a POSITA cannot understand the scope of the claim with reasonable certainty. Lange (Ex. B) ¶32-33.

Claim 1 recites:

> 1. A firestop apparatus, comprising:
> a frame comprising an opening;
> a first area of intumescent material in the frame; and
> a second area of intumescent material in the frame at a position adjacent to the first area of intumescent material, **wherein the second area of intumescent material is between the frame and <u>the first intumescent material</u>** and wherein each of the first area of intumescent material and the second area of intumescent material extends in a first direction, wherein the first and second areas of intumescent materials overlap one another and overlap the opening of the frame, in a second direction, **<u>the first and second intumescent materials</u> extending in the first direction beyond the edge of the frame defining the opening** . . .

'417 Patent, Claim 1.

The claim recites the phrases "***the*** first intumescent material" and "***the*** first and second intumescent material" without first reciting "***a*** first" or "***a*** second" intumescent material. Therefore, those phrases lack antecedent basis.

It is unclear whether the claim's first mention of "first intumescent material" refers to intumescent material within the "first area of intumescent material" or to something different altogether. Further, given the ambiguous nature of the phrase "first intumescent material," a POSITA cannot determine with reasonable certainty where the "second area of intumescent material"—which the claim requires to be located "between the frame and the first intumescent material"—is actually positioned or configured.

The same is true for the phrase "the first and second intumescent materials" recited later in claim 1. It is unclear whether this phrase refers to: intumescent material within the "first area of intumescent material," "second area of intumescent material," and/or other area(s) of intumescent material(s); or structure(s) or element(s) altogether separate from the first and second areas of intumescent material.

Moreover, a POSITA would not understand these terms to correspond to the first and second *areas* because the claim requires those *areas* to be located "in the frame," whereas the first and second intumescent materials "extend[] beyond the edge of the frame." Lange (Ex. B) ¶34-35. Furthermore, given that the phrase "first

and second intumescent materials" appears only once in the claim and lacks antecedent basis, it is unclear how, if at all, the "first and second intumescent materials" interact with the other elements of the claimed apparatus. *Id.*

c. Hilti's Reply Position

STI's argument that "the first intumescent material" lacks antecedent basis and is indefinite fails because a POSITA understands, with reasonable certainty, that "the first intumescent material" refers to the "first area of intumescent material" recited earlier in the claim. Ex. K, ¶¶17-22. The embodiment of Fig. 1, as annotated by Hilti below, informs that understanding.

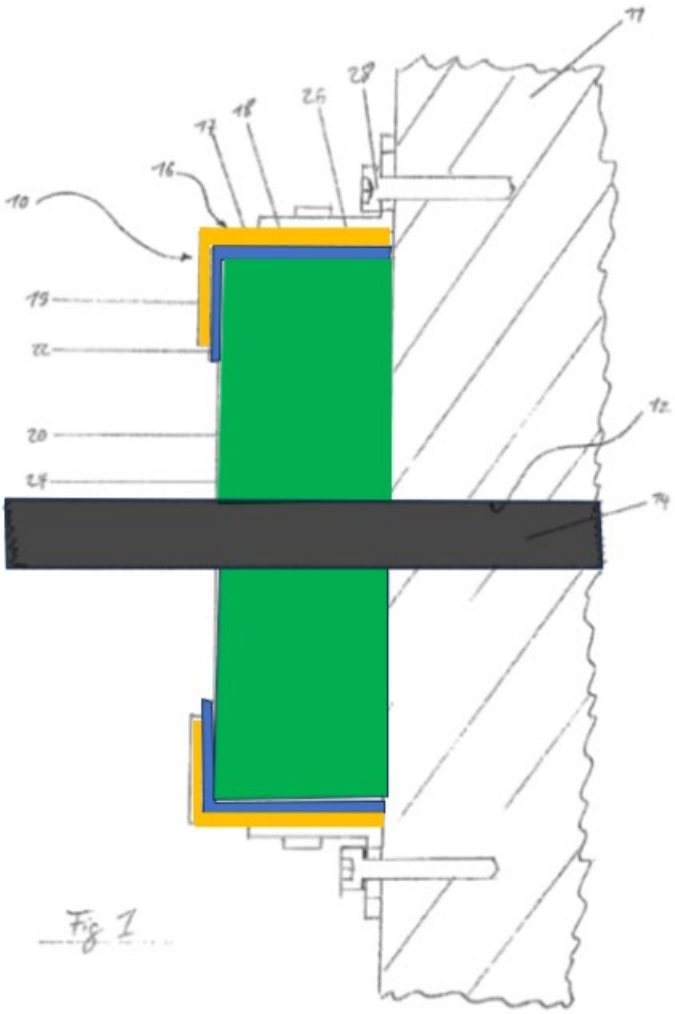

Id., ¶¶19-20.

The above-figure shows only two intumescent materials (blue and green) in the orange frame, which are adjacent to each other. *Id*. Consistent with this, claim 1 recites "first" (green) and "second" (blue) areas of intumescent material, "adjacent to" each other and both "in the frame." *Id.*, ¶21. The claim then recites that "the second area of intumescent material is ***between*** the frame and the first intumescent material." *Id*. In this context, a POSITA understands that "the first intumescent material" refers to the "first area of intumescent material." *Id*.

STI overlooks the foregoing to argue (*supra* at 44) that a POSITA would not know whether "the first intumescent material" refers to "intumescent material within the 'first area of intumescent material' or to something different altogether." But the fact that both terms include the word "first" is a strong indication to a POSITA that they refer to the same structure. *Id.*, ¶22.

While STI argues that the claim lacks perfect antecedent basis, the Federal Circuit has found that "[t]he requirement of antecedent basis is a rule of patent drafting, administered during patent examination" noting that the MPEP explains that "[o]bviously, however, the failure to provide explicit antecedent basis for terms does not always render a claim indefinite." *Energizer Holdings, Inc. v. Int'l Trade Comm'n*, 435 F.3d 1366, 1370 (Fed. Cir. 2006). Instead, even where explicit antecedent basis is lacking, "[i]f the scope of a claim would be reasonably ascertainable by those skilled in the art, then the claim is not indefinite." *Id*. at 1370-71. Indeed, "an antecedent basis can be present by implication," as is (at least) the case here. *Id*. at 1371.

A POSITA would further understand that "the first and second intumescent materials" refer to the "first" and "second" areas of intumescent material. Ex. K, ¶¶23-24. The claim recites that "each of the first area of intumescent material and the second area of intumescent material ***extends in a first direction***." *Id.,* ¶24. The claim then recites "the first and second intumescent materials ***extending in the first***

direction beyond the edge of the frame defining the opening." *Id.* A POSITA understands that this latter recitation narrows the manner in which the "first" and "second" areas of intumescent materials extend in a "first direction" as shown in the annotated figure below. *Id*.

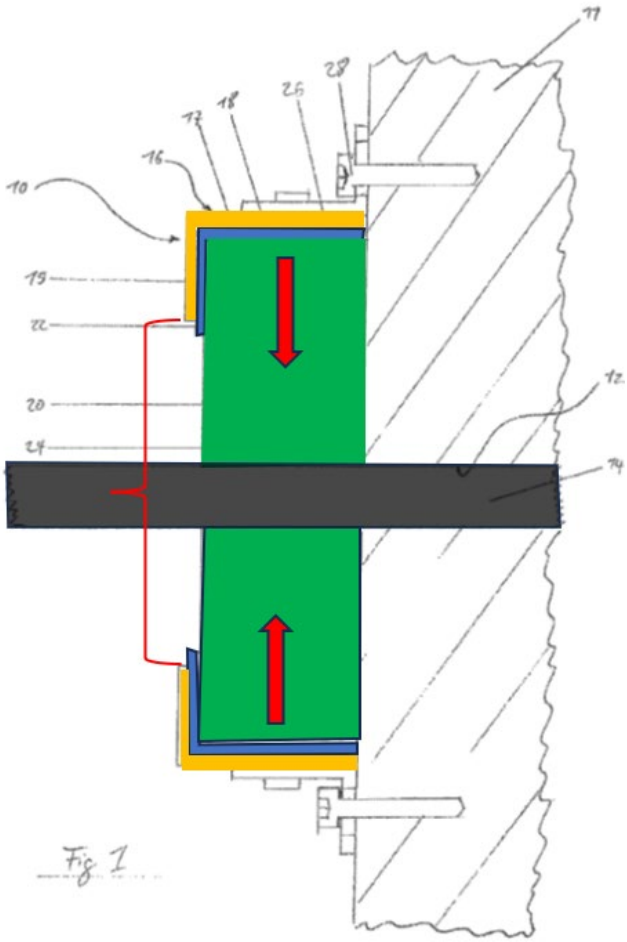

Id.

The blue and green intumescent materials are both in the frame because they are located within the orange frame. *Id*. At the same time, they extend beyond an opening in the frame (shown by the red bracket) as indicated by the red arrows. *Id*.

Indeed, the continuity of the "first" and "second" intumescent labels and extension in a first direction provide a strong indication to a POSITA that the "first and second intumescent materials" refer to the "first" and "second" areas of intumescent material. *Id*.

The foregoing is consistent with the file history in which Hilti used the phrase the "first and second areas of intumescent materials" interchangeably with the term "the first and second intumescent materials" in addressing a prior art rejection:

> Rather, as shown in the drawing above, neither of the ***first and second areas of intumescent materials 13 and 14*** overlap the opening in the frame. Rather, ***the first and second intumescent materials 13 and 14*** overlap the larger cross section of its frame, but does not overlap any portion of the smaller cross-section (16) which corresponding to the frame opening.

Ex. L at 33; Ex. K, ¶25. STI fails to carry its lofty indefiniteness burden.

d. STI's Sur-Reply Position

Hilti's vague argument (*supra* at 45-46) that the disputed claim phrases "refer" to the "areas of intumescent material" suggests that the Applicant unintentionally omitted the word "area(s)" from the disputed claim phrases, conflating those terms.

The specification does not clarify the ambiguity because it does not use any of these disputed terms. Ex. P (Sturges Dep. Tr.), 11:18-13:8 (confirming the absence of these terms in the specification). Further, that the word "first" appears in the different claim phrases is of no moment. Claims often label completely different

structures as the "first" of their kind in the claim. The shared numerical label "first" does not indicate that two different terms refer to the same structure.

Moreover, contrary to Hilti's assertion, the fact that the claim requires both the first area/second area and "the first and second intumescent materials" to "extend[] in [a/the] first direction" does not indicate that they are the same structures. Indeed, if the different claim language truly referred to the same structures, there would be no need for the claim to recite ***twice*** that they extend in the first direction; that would create a confusing redundancy in the claim.

Finally, the prosecution history is not instructive. The applicant's inconsistent references to elements 13 and 14 of a prior art reference (DE 9411293 to Pafamax) do not suggest that the claim language itself is definite or that the phrases are intended to refer to the same structure.

4. "connection elements"/"connection section"

	Hilti	**STI**
"connection element"	This term should be construed according to its plain meaning, as informed by the intrinsic record, which is "the area on the joint sealing tape which is located between and connects the at least two sealing elements, formed as one-piece with the at least two sealing elements or separately from	"a component that is connected to at least one other discrete component"

	the at least two sealing elements." If this term is not construed according to its plain and ordinary meaning, it should be construed as Hilti proposes based on the intrinsic record.	
"connection section"	This term should be construed according to its plain meaning, as informed by the intrinsic record, which is "the area on the joint sealing tape which is located between and connects the first sealing section and the second sealing section, formed as one-piece with the first sealing section and second sealing section or separately from the first sealing section and second sealing section." If this term is not construed according to its plain and ordinary meaning, it should be construed as Hilti proposes based on the intrinsic record.	"a component that is connected to at least one other discrete component"

a. Hilti's Opening Position

Claim 1 of the '036 and '528 patents are each directed to a "joint sealing tape." ('036 patent; '528 patent.) In the firestopping field, a joint sealing tape is used to seal the space between building components. ('036 patent at 1:16-37.) An exemplary "joint sealing tape" sold by STI is shown in the image below.

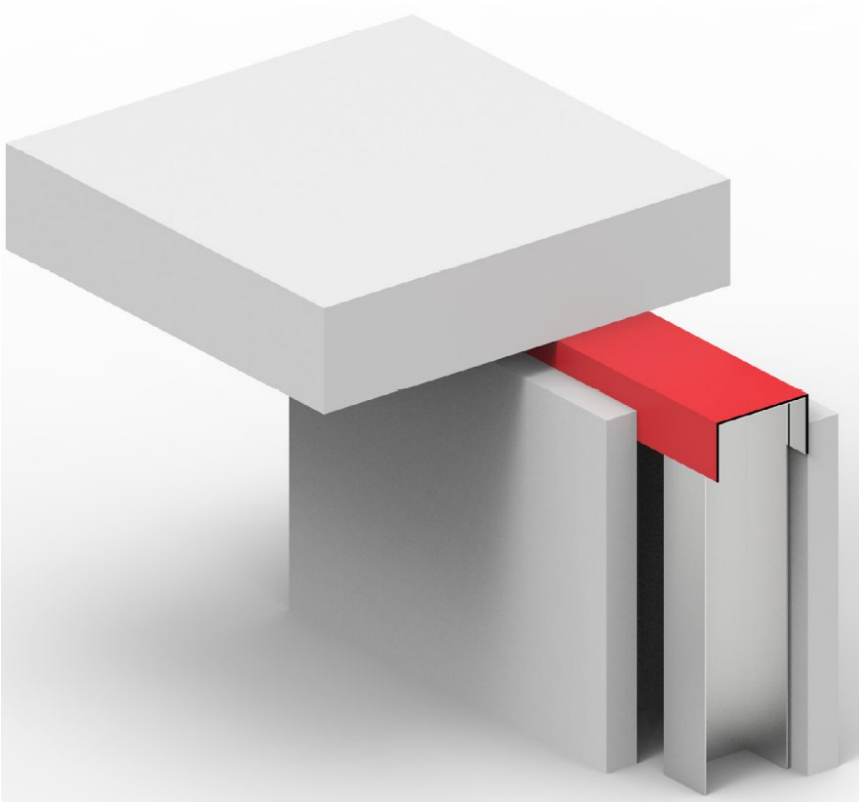

(Exhibit A at p. 1.) The red U-shaped tape sits on a ceiling track and seals the area between, for example, the ceiling track and the wall.

The term "connection element" is recited in claim 1 of the '036 patent while the term "connection section" is recited in claim 1 of the '528 patent. STI has proposed narrowly construing both of these terms to mean "a component that is connected to at least one other discrete component." (JCCC at pp. 1, 6.) Hilti, on the other hand, proposes that the terms should be construed according to their plain and ordinary meaning. Fig. 1a is illustrative:

Fig. 1a

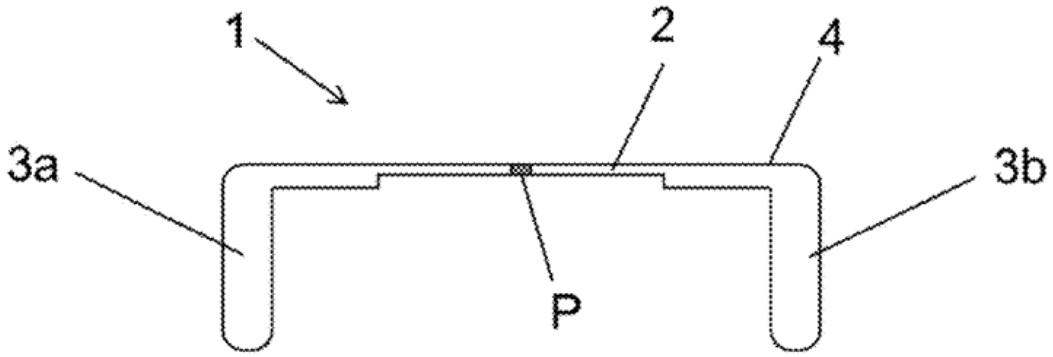

('036 patent.[8])

As shown, connection element 2 is the area on the joint sealing tape 1 located between and connecting the sealing elements 3a and 3b. Thus, the plain and ordinary meaning for "connection element" is "the area on the joint sealing tape which is located between and connects the at least two sealing elements, formed as one-piece with the at least two sealing elements or separately from the at least two sealing elements."[9] (JCCC at p. 1.) And, for "connection section," this is "the area on the joint sealing tape which is located between and connects the first sealing section and the second sealing section, formed as one-piece with the first sealing section and

[8] The '036 and '528 patents share substantially identical disclosure. For convenience, Hilti cites to the '036 patent in this brief; however, the same disclosure appears in the '528 patent.

[9] The explanation for the second clause regarding how the joint sealing tape is formed is set forth below in rebuttal to STI's narrow construction.

second sealing section or separately from the first sealing section and second sealing section." (*Id*. at p. 6.)

Notably, the parties agree that the "connection element" and "connection section" both must connect other components. The parties disagree on whether the connection element/connection section ***must*** be a physically discrete piece as opposed to alternatively including a component that is integrated into a one-piece tape construction.

The specification resolves the parties' dispute: "The joint sealing tape according to the invention can be produced in one piece from one material or in multiple pieces, also from different materials." ('036 patent at 8:35-37.) Thus, if the tape is produced in multiple pieces, the connection element/connection section would be a physically discrete piece, but, if produced in one piece, the connection element/connection section would not be a physically separate piece as it would be integrated into that construction. Providing further detail on the one-piece embodiment, the patent specifies that Figs. 1a-1c include "sealing elements 3a and 3b and connection element 2 [that] are produced in one piece[.]" (*Id*. at 13:54-57.)

Fig. 1a

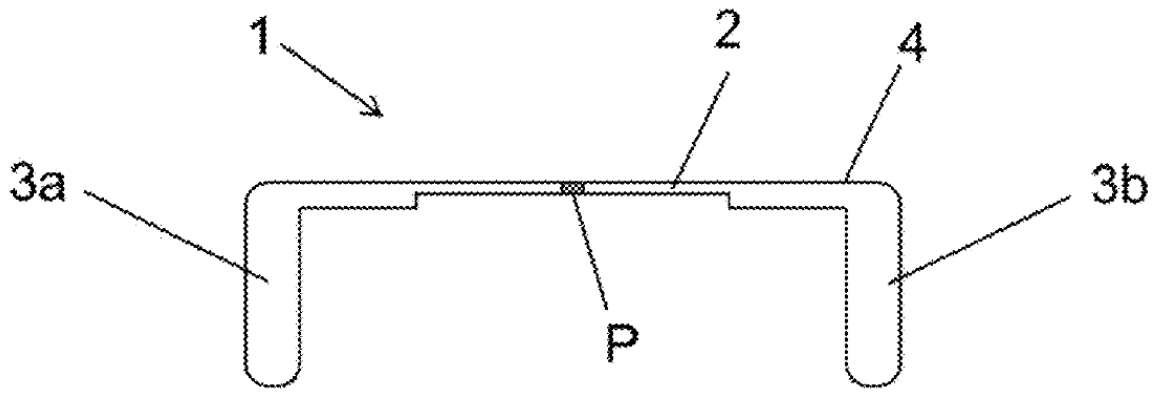

As shown, connection element 2 connects the sealing elements 3a and 3b and is not a "discrete component" of the joint sealing tape. Instead, the joint sealing tape consists of one integrated piece.

In fact, ***every*** figure in the '036 and '528 patents depicts a joint sealing tape consisting of one piece, which includes connection element 2 that connects the sealing elements 3a and 3b. (*Id*. at 14:8-10 (Figs. 2a-2c), 14:32-33 (Figs. 3a-3b), 14:55-56 (Figs. 4a-4c), 15:23-25 (Figs. 5a-5b), 15:43-45 (Fig. 6).)[10] As such, STI's proposed construction, which would entirely read out every one-piece embodiment, is contrary to the "strong presumption against a claim construction that excludes a disclosed embodiment." *In re Katz Interactive Call Processing Patent Litig.*, 639 F.3d 1303, 1324 (Fed. Cir. 2011). On the other hand, Hilti's proposed construction correctly includes both disclosed embodiments (multi-piece and one-piece).

[10] The '528 patent includes the same figures and disclosure.

STI's proposed construction should also be rejected under the doctrine of claim differentiation. Specifically, claim 11 of the '036 patent recites: "The joint sealing tape according to claim 1, wherein the sealing elements and the connection element consist of one material in one piece, and are sheathed with a plastic film." ('036 patent at 17:27-30.) "Under the doctrine of claim differentiation, dependent claims are presumed to be of narrower scope than the independent claims from which they depend." *AK Steel Corp. v. Sollac & Ugine*, 344 F.3d 1234, 1242 (Fed. Cir. 2003). Accordingly, claim 1 must be broad enough to include joint sealing tapes that consist of one piece as well as joint sealing tapes that consist of multiple pieces. Otherwise, claim 11's requirement that "the sealing elements and the connection element consist of one material in one piece" could never be met.

b. STI's Answering Position

Claim 1 of the '036 Patent recites a "connection element," and claims 1 and 12 of the '528 Patent recite a "connection section." The specifications of these patents refer only to a "connection element," and nowhere mention a "connection section." Thus, to avoid rendering the term "connection section" indefinite, lacking written description and not enabled, STI assumes that "connection section" has the same meaning as "connection element."

The Court should construe "connection element" and "connection section" as "a component that is connected to at least one other discrete component." STI's

construction is consistent with the specification, which contemplates an embodiment where the connection element and sealing elements are physically discrete parts that are separately connected together. '036 Patent at 10:5-16 ("If the joint sealing tape is produced in multiple parts, positioning of the sealing elements on the connection element takes place by means for attachment, for example in the form of an adhesive layer. . . ."); *id.* at 8:37-38 (… It is preferred that the joint sealing tape consists of multiple units/materials"). Importantly, STI's construction covers *preferred* embodiments.

STI's construction is also consistent with the plain meaning of the term "connection element"/"connection section." A connection is a "junction, union" or "bond, link." Ex. G (Merriam-Webster Dictionary at 153). These terms convey that two or more components are joined together.

Further, the idea espoused by Hilti that claims should cover disclosed embodiments is not a hard-and-fast rule; the claim language ultimately controls. *See SIMO Holdings, Inc. v. H.K. Ucloudlink Network Tech*, 983 F.3d 1367, 1378-80 (Fed. Cir. 2021) ("The mere fact that there is an alternative embodiment disclosed in the asserted patent that is not encompassed by our claim construction does not outweigh the language of the claim. . . ."); *TIP Systems, LLC v. Phillips & Brooks/Gladwin, Inc.*, 529 F.3d 1364, 1373 (Fed. Cir. 2008) ("Our precedent is

replete with examples of subject matter that is included in the specification, but is not claimed.”).

Furthermore, the prosecution history of the ’036 Patent makes clear that a “connection element” is “a component that is connected to at least one other discrete component.” In a “Supplemental Reply” to an Office Action, the Applicant argued that various prior art references did not disclose a “connection element,” repeatedly distinguishing them because they disclose a perforation or other way to separate a single body into multiple portions but did not disclose a connection element between sections of the body. Ex. H (’036 Patent File History, Supp. Office Action Reply at 3-10).

For instance, the Applicant distinguishes over U.S. Patent No. 6,125,608 (“Charlson”), which discloses an insulation pieces fabricator “in board stock form.” Ex. H (Supp. Office Action Reply at 6); Ex. I (Charlson). The insulators are fabricated from one piece of material and perforated in between for ease of separation. Ex. I (Charlson at 9:50-63) (“FIG. 17 depicts . . . insulating members 1201 . . . in an integral board form . . . with channels 1220 and perforation lines 1710 formed in the extruded product.”).

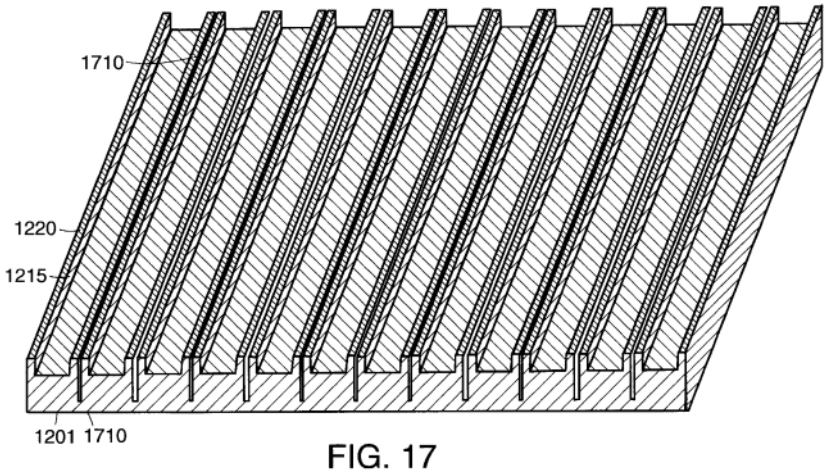

FIG. 17

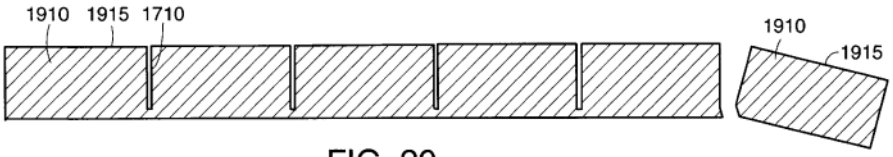

FIG. 20

Id., FIGs. 17, 20. The Applicant argued that in Charlson "[t]here is no perforated connecting element, rather the board stock itself is perforated allowing for separation of sections. Two elements are not connected through a perforated connection element." Ex. H (Supp. Office Action Reply at 6-7). This statement shows that the Applicant did not intend for the claims to cover a "connection element" or "connection section" formed as a one-piece integral with other components, having distinguished such structures in the prior art. Lange (Ex. B) ¶36-44. The Applicant's statements are critical to informing the Court's interpretation of "connection element"/"connection section." *Prima Tek II*, 318 F.3d at 1149; *Seachange*, 413 F.3d at 1372-73.

Thus, STI's construction of "connection element" is consistent with the Specification and prosecution history of the '036 Patent. The Applicant's statements during prosecution of the '036 Patent are also relevant to interpreting the term "connection section" in the '528 Patent. *See One-E-Way, Inc. v. ITC*, 859 F.3d 1059, 1064 n.3 (Fed. Cir. 2017) ("[T]he meaning of claim terms in one patent can be informed by statements made during prosecution of other patents in the same family.").

Hilti's argument that STI's construction excludes an embodiment from the specification is inapposite at least because the Applicant chose to narrow the interpretation of the claims during prosecution to avoid prior art. Additionally, Hilti's claim differentiation argument is based on an incorrect interpretation of the scope of claim 11. *Infra* at 95-99 (Term 8). Furthermore, claim 11 is distinguishable from claim 1 based on its requirement that portions of the sealing tape be "sheathed with a plastic film." Claim 1 does not include that requirement.

c. Hilti's Reply Position

The effect of STI's proposed construction is to require a physically separate connection element/section as compared to the sealing elements/sections. STI's construction is legally incorrect because it would exclude ***every*** depicted embodiment as explained in Hilti's Opening Position (*supra*, at 54-55). To make this erroneous argument, STI relies on Lange. However, Lange's cross-examination

revealed that his opinion is based on the unreasonable position that he cannot be sure whether the specification depicts an embodiment of a one-piece tape in which the "connection element" is not a physically separate part of the joint sealing tape. Ex. J at 77:6-84:7. For example:

> Q. Are you aware that there are embodiments disclosed in the '036 patent in which the connection element and sealing elements are made from a single integrated piece of material; for example, Column 13, Line 54?
>
> A. Column 13, Line 54 states, "The Sealing Elements 3A and 3B and Connection Element 2 are produced in one piece."
>
> Q. Yeah. And so what do you understand that to mean?
>
> A. Well, I'm not sure if that means ***each piece*** is -- is produced in one piece or if they're -- the three are produced in one piece together.

Id. at 78:15-79:3.

Mr. Lange was then directed to Fig. 1a, which is reproduced below and described as disclosing that the "sealing elements 3a and 3b and connection element 2 are produced in one piece." *Id.* at 79:4-19.

Fig. 1a

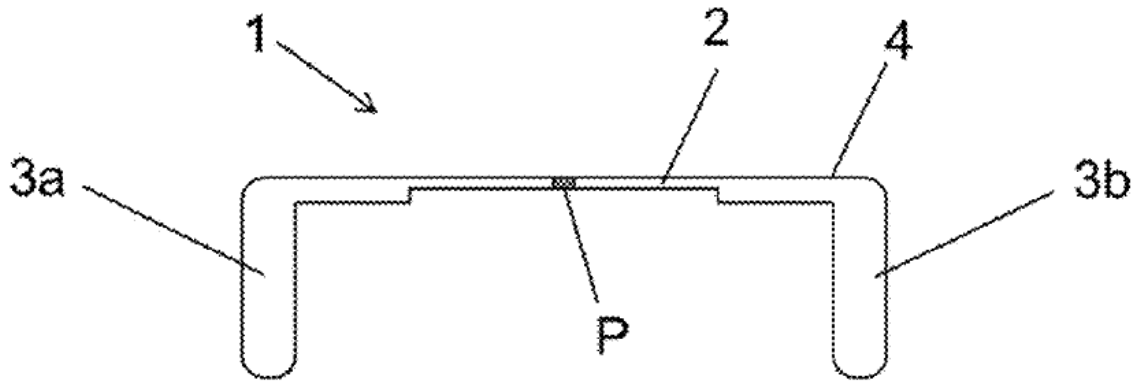

’036 patent at Fig. 1a.

Despite the figure and the accompanying description, Lange testified that “given the descriptions that I see in the specification, I don’t think Figure 1A is detailed enough to tell” whether the tape depicted the sealing elements as physically discrete components as compared to the connection element. *Id*. at 79:22-80:3. Mr. Lange was then asked:

> Q. And so in Column 8 of the patent, Line 30 -- 29 -- sorry, Line 35, it says, “The joint sealing tape, according to the invention, can be produced in one piece from [one] material or in multiple pieces also from different materials.” Do you see that?
>
> A. I do see that.
>
> Q. Does that suggest to you that the -- well, what does that mean to you?
>
> A. To me it means that the joint-sealing tape can be produced in one piece or from multiple pieces.
>
> [. . .]
>
> Q. When the joint-sealing tape is produced in one piece from one material, would the sealing elements be physically discrete components as compared to the connection element?
>
> A. No.
>
> Q. But [i]n Figure 1, you can’t tell whether -- Figure 1A, you can't tell whether the sealing elements are physically distinct components as compared to the connection element?
>
> A. Again, I don't think there's enough detail in the -- in the figure to know.

Q. Well, on the Column 13, Line 54, it says, "Furthermore, the Sealing Element 3A and 3B and Connection Item 2 are produced in one piece." Does that tell you?

A. I'll restate -- or try to restate my prior answer. From that passage, I don't know if they mean the sealing elements and the connection element are produced collectively in one piece or if ***each is produced as one piece***.

Q. It doesn't say that each are produced as one piece, does it?

A. What I'm saying is it's ambiguous to me. One could read it either way.

Q. Even in view of the language we just looked at in Column 8 which says the joint-sealing tape according to the invention can be produced in one piece from one material?

A. The rest of that sentence is, or in multiple pieces. So that provides no clarification to me.

Id. at 80:4-82:1. It is simply not credible to argue that "produced in one piece" could actually mean produced in multiple pieces given the clarity of the specification. Therefore, Lange's opinion provides no support for STI's effort to exclude every depicted embodiment (and generally impugns his credibility).

STI also argues (*supra* at 57-58) that Hilti disclaimed coverage of the single piece embodiment shown in each figure of the '036 patent during prosecution. But in the cited portion of the file history, Hilti said nothing about whether the connection element could, let alone ***must***, be a physically separate piece of the claimed joint sealing tape in a way that would exclude every depicted embodiment.

During prosecution, the examiner had cited Charlson as disclosing that "perforations in construction material to separate an integral whole into two separate

pieces w[ere] well known in the arts" citing a number of references including Charlson. Ex. N at 177. The Charlson reference discloses insulators 1201 separated by perforation 1710 (also referred to as a score line in the reference) as shown in the annotated figure below.

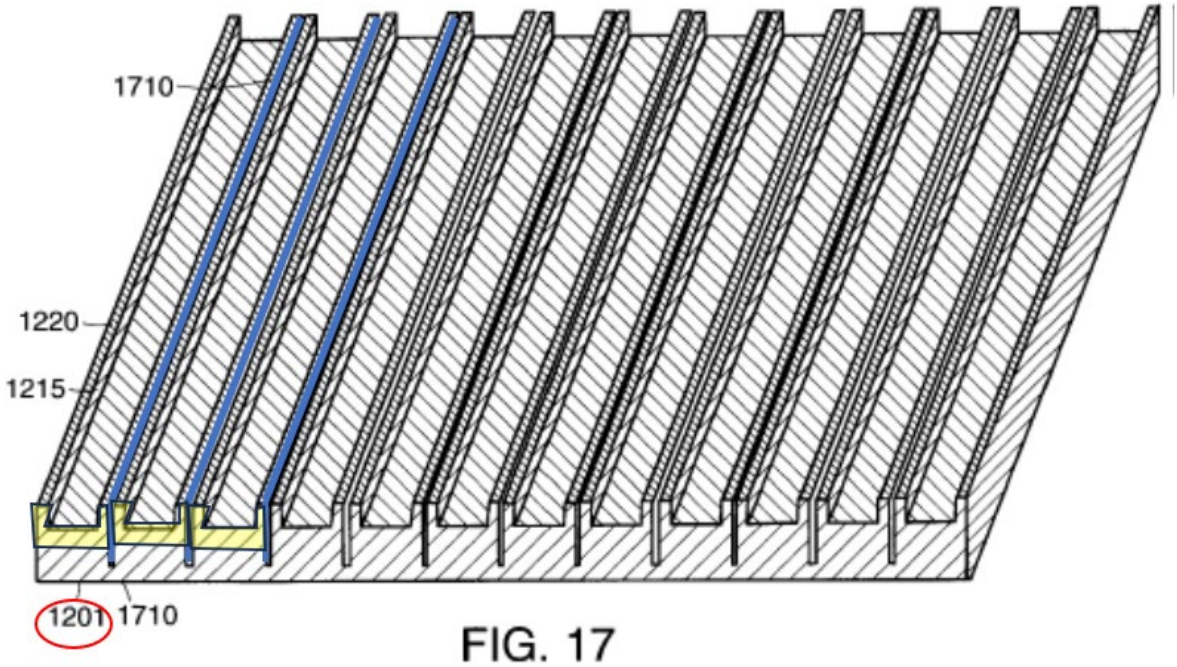

Ex. I at Fig. 17 (annotated).

The perforations are ***in between*** each separate insulator; they are not ***within*** any surface of the individual insulators that could be considered a connection element (*e.g.*, the horizontal yellow portion of the insulator). Accordingly, Hilti argued: "There is no perforated connecting element, rather the board stock itself is perforated allowing for separation of sections. Two elements are not connected through a perforated connection element." Ex. N at 171. These sentences argue that

the prior art did not disclose a perforated connection element. They simply do not argue that the connection element must be a physically separate component of the joint sealing tape, much less clearly and unmistakably.

d. STI's Sur-Reply Position

Contrary to Hilti's assertion (*supra* at 63), Mr. Lange never opined that "'produced in one piece' could actually mean produced in multiple pieces." Further, Mr. Lange's opinion that FIG. 1a lacks sufficient detail to determine whether the entire tape is produced in one piece is entirely reasonable. Because FIG. 1a is a "front view" ('036 patent, 3:13) and not a cross-sectional view, the internal construction of the tape is not visible in this figure. The specification's discussion ("the sealing elements 3a and 3b and connection element 2 are produced in one piece", '036 patent, 13:54-56) does not help, as it suffers from the same ambiguities that plague claim 11 (*see infra* at 95-99)—i.e., it is unclear ***what*** is "produced in one piece": the entire tape or each individual component thereof.

Hilti also mischaracterizes the prosecution history. Critically, Hilti's annotations (*supra* at 64, reproduced below) ignore the bottom half of each integrated insulator and the area underneath that connects them:

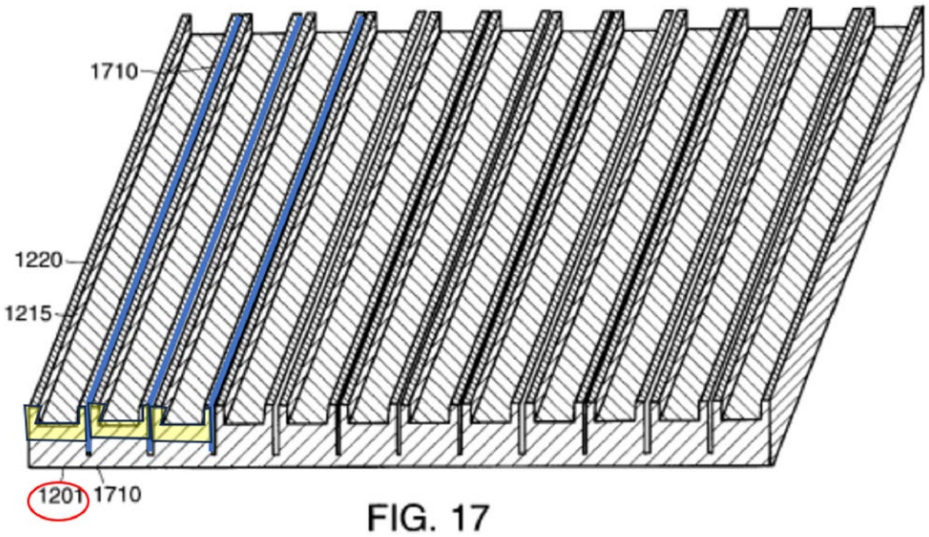

A properly annotated figure considers the insulators as a whole (yellow), and the perforated area (red) connecting the insulators:

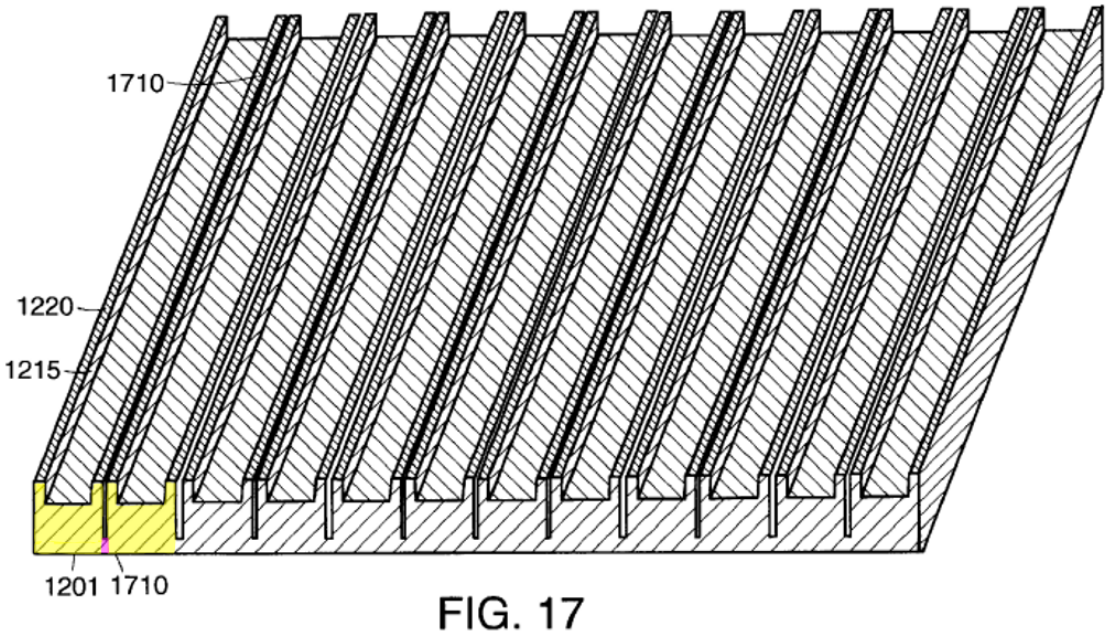

Ex. I, Fig. 17 (annotated).

Hilti acknowledges (*supra* at 64-65, citing Ex. N at 171) that it argued during prosecution that this one-piece design ***does not disclose a perforated connection element***. Because the area between each insulator is connected, Hilti was necessarily arguing that the red area (which is integrally formed with the insulators) is not a connection element because it is not connected to at least one other discrete component. Even if, as Hilti argues, this is not an explicit disclaimer, it nonetheless informs the meaning of the term.

5. "sealing element"/"sealing section"

	Hilti	**STI**
"sealing element"	This claim limitation does not invoke 35 U.S.C. § 112(f). This term should be construed according to its plain meaning, as informed by the intrinsic record, which is "an area on the joint sealing tape positioned at an outer edge of the connection element for sealing a joint." If this term is not construed according to its plain and ordinary meaning, it should be construed as Hilti proposes based on the intrinsic record. If construed according to § 112(f):	The claim limitation "at least two sealing elements" invokes 35 U.S.C § 112(f) and means: "A discrete component that has the following attributes to accomplish the function of "sealing": 1) made from a deformable material that resumes its shape after compression and 2) has a cross section that is one of the following geometric shapes: round, oval, polygonal, square, rectangular, parallelogram, triangular,

	Function: sealing a joint **Structure**: a deformable material that either: a) does not return to its original shape after deformation or b) returns to its original shape after the deformation, and equivalents	or rectangular with rounded corners."
"sealing section"	This claim limitation does not invoke 35 U.S.C. § 112(f). This term should be construed according to its plain meaning, as informed by the intrinsic record, which is "an area on the joint sealing tape positioned at an outer edge of the connection section for sealing a joint." If this term is not construed according to its plain and ordinary meaning, it should be construed as Hilti proposes based on the intrinsic record. If construed according to § 112(f): **Function**: sealing a joint **Structure**: a deformable material that either: a) does not return to its original shape after deformation or b) returns to its original shape after the deformation, and equivalents	The claim limitation "sealing section" invokes 35 U.S.C. § 112(f) and means: "A discrete component that has the following attributes to accomplish the function of "sealing": 1) made from a deformable material that resumes its shape after compression and 2) has a cross section that is one of the following geometric shapes: round, oval, polygonal, square, rectangular, parallelogram, triangular, or rectangular with rounded corners."

a. Hilti's Opening Position

STI argues that these terms—which do not include the phrase "means for"—should be construed according to 35 U.S.C. §112(f). (JCCC at pp. 2, 7.) Where a claim term is not drafted using "means" language, "the Court presumes that the term is not a means-plus-function limitation, and it is Defendants' burden to prove otherwise—*i.e.*, to show that a person of ordinary skill in the art would not understand the term to have a sufficiently definite meaning as the name for structure." *Collaborative Agreements, LLC v. Adobe Sys. Inc.*, 2015 WL 7753293, at *4 (N.D. Cal. Dec. 2, 2015). STI will not be able to rebut the presumption that these terms are not governed by §112(f) because a POSITA would understand the terms "sealing element" and "sealing section" as sufficiently definite names for structure. Once STI attempts to rebut the presumption in Hilti's favor, Hilti will respond in more detail including possibly with expert testimony.

Rather than construing the term under §112(f), the Court should adopt the plain meaning of these terms. Again, Fig. 1a is illustrative:

Fig. 1a

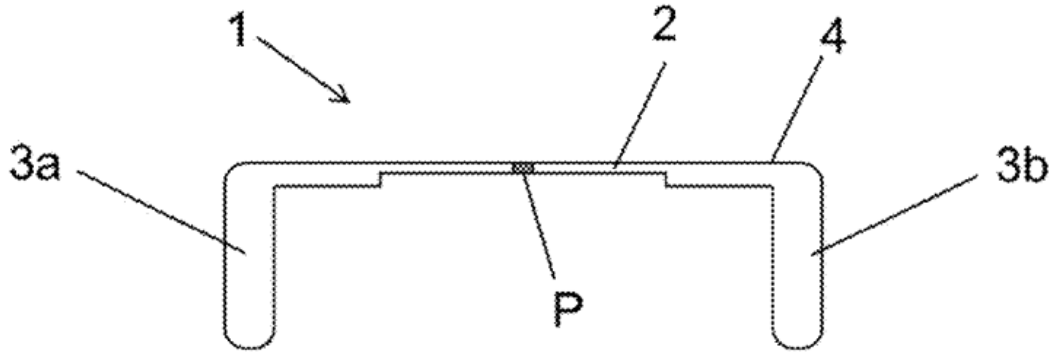

As shown, sealing elements 3a and 3b are each positioned on the joint sealing tape 1 at an outer edge of connection element 2 and are for sealing a joint. Thus, the plain and ordinary meaning of "sealing element" and "sealing section" is "an area on the joint sealing tape positioned at an outer edge of the connection element/section for sealing a joint." (JCCC at pp. 2-3, 7-8.) However, if the Court does find these to be §112(f) terms, it should adopt Hilti's proposed function ("sealing a joint") and identification of structure as follows: "a deformable material that either: a) does not return to its original shape after deformation or b) returns to its original shape after the deformation, and equivalents." (*Id.*)

STI's proposed construction also includes that the corresponding structure that performs the function of "sealing" is "deformable," but argues that the structure must be "made from a deformable material ***that resumes its shape after compression***." (*Id.*) STI is wrong because the specification explains that "the sealing elements consist of a deformable material," which "can be either plastically or elastically deformable." ('036 patent at 7:6-8.) The specification explains that "plastically deformable" means "that the sealing elements are deformable and do not return to their original shape after the deformation" while "elastically deformable" means "that the sealing elements are deformable and return to their original shape after the deformation." (*Id.* at 4:42-51.) "When multiple embodiments in the specification correspond to the claimed function, proper application of § 112, ¶ 6

generally reads the claim element to embrace each of those embodiments." *Micro Chem., Inc. v. Great Plains Chem. Co. Inc.*, 194 F.3d 1250, 1258-59 (Fed. Cir. 1999). Accordingly, STI's construction invites error by limiting "deformable" to an "elastically deformable" embodiment to the exclusion of a "plastically deformable" embodiment. Structures utilizing either type of deformability perform the function of "sealing [a joint]."

The Court should also reject STI's proposal to include as a corresponding structure "a cross section that is one of the following geometric shapes: round, oval, polygonal, square, rectangular, parallelogram, triangular, or rectangular with rounded corners." (JCCC at pp. 2-3, 7-8.) The parties agree that if these terms are construed according to §112(f), the function requires "sealing" (although Hilti's construction correctly identifies that "a joint" is sealed).

"Under § 112, ¶ 6, a court may not import ... structural limitations from the written description that are unnecessary to perform the claimed function." *Wenger Mfg., Inc. v. Coating Mach. Sys., Inc.*, 239 F.3d 1225, 1233 (Fed. Cir. 2001). Yet, STI's proposed "cross section" construction does just that because the "cross section" is not necessary to perform the function of sealing. Instead, the cross section of the sealing elements simply indicates their shape.

b. STI's Answering Position

The claim terms "sealing element" ('036 Patent, claim 1) and "sealing section" ('528 Patent, claims 1 and 12) should be construed as means-plus-function limitations meaning: "A discrete component that has the following attributes to accomplish the function of sealing: 1) made from a deformable material that resumes its shape after compression and 2) has a cross section that is one of the following geometric shapes: round, oval, polygonal, square, rectangular, parallelogram, triangular, or rectangular with rounded corners."

Claim 1 of the '036 Patent recites "sealing elements" while claims 1 and 12 of the '528 Patent recite "sealing sections." The specifications of both patents are nearly identical and discuss only "sealing elements," not "sealing sections." The specification's discussion of the "sealing element" ***must*** also apply to the claimed "sealing section" of the '528 Patent claims; otherwise, the term "sealing section" would be indefinite and lack written description support because there is no other structure disclosed in the specification that a POSITA would understand as a "sealing section." Lange (Ex. B) ¶45-48.

Means-plus-function claiming occurs when a claim term is drafted such that it invokes 35 U.S.C. § 112(f), which states:

> An element in a claim . . . may be expressed as a means or step for performing a specified function without the recital of structure, material, or acts in support thereof, and such claim shall be construed

> to cover the corresponding structure, material, or acts described in the specification and equivalents thereof.

"[M]erely because an element does not include the word 'means' does not automatically prevent that element from being construed as a means-plus-function element." *Williamson v. Citrix Online, LLC*, 792 F.3d 1339, 1348 (Fed. Cir. 2015). "The standard is whether the words of the claim are understood by [a POSITA] to have a sufficiently definite meaning as the name for structure." *Id.* at 1349. "When a claim term lacks the word 'means,' . . . § 112, para. 6 will apply if . . . the claim term fails to 'recite sufficiently definite structure' or else recites 'function without reciting sufficient structure for performing that function.'" *Id.*

"Sealing element" and "sealing section" are means-plus-function limitations because they contain language ("element" and "section") that fails to recite sufficiently definite structure for performing the "sealing" function. As such, these claims do not apprise a POSITA as to how the claimed "element" and "section" are designed to achieve the claimed result. Rather, in these claims, the words "element" and "section" are generic terms with no specific structural meaning—i.e., nonce words—"that reflect nothing more than verbal constructs . . . tantamount to using the word 'means' because they typically do not connote sufficiently definite structure." *Id.* at 1350.

Here, the plain meaning of "element" is "a constituent part," and the plain meaning of "section" is "1: a part cut off or separated[;] 2: a distinct part" Ex. G

(Merriam-Webster Dictionary 2016 Ed. at 231, 650). These words do not describe a structure of any particular design, shape, size, or contours. Thus, they are tantamount to the word "means" because they are merely generic placeholders that require no specific mechanical structure for performing the claimed function.

For instance, the phrase "a sealing element" does not provide notice of any specific structure. The nonce word "element" can easily be replaced with "means", i.e., "a sealing means," without changing the meaning of the phrase. *Williamson*, 792 F.3d at 1350 ("Generic terms such as . . . 'element' . . . [are] tantamount to using the word 'means'. . . "); *WSOU Investments LLC v. Google LLC*, 2023 WL 6210607, at *4 (Fed. Cir. Sept. 25, 2023) ("[T]he term 'unit,' in a vacuum, is defined only by the function it performs, much like terms such as 'element' or 'means.'"). Similarly, the word "section" can be replaced with "means" without changing the meaning of the phrase.

Accordingly, the terms "element" and "section" are generic nonce terms that merely mean a part of something larger, i.e., the joint sealing tape. Hence, a POSITA would recognize that these claim limitations merely state that "some part of the joint sealing tape" performs the function of "sealing." Lange (Ex. B) ¶47-52.

Courts have construed similar phrases as means-plus-function limitations. *See, e.g.*, *Mas-Hamilton Grp. v. LaGard, Inc.*, 156 F.3d 1206, 1213-1214 (Fed. Cir. 1998) ("lever moving element for moving the lever" and "movable link member for

holding the lever…"); *Magnolia Med. Techs., Inc. v. Kurin, Inc.,* 2020 WL 2559795, at *3 (D. Del. May 20, 2020) ("diverter"); *Alarm.com, Inc. v. SecureNet Tech.s, LLC*, 2019 WL 3996883, at *5-*6 (D. Del. Aug. 23, 2019) ("connection management component").

For these reasons, "sealing element" and "sealing section" are means-plus-function recitations properly limiting the scope of the claims "to the structure . . . described in the specification and equivalents thereof." 35 U.S.C. § 112(f).

Hilti argues that these terms are not means-plus-function limitations, but it fails to identify any actual structure that corresponds to the "sealing element" and "sealing section." *See supra* at 69-70. Instead, Hilti asserts that these terms should be given their plain meaning, which Hilti argues is: "an area on the joint sealing tape positioned at an outer edge of the connection element/section for sealing a joint." *Id.* Hilti's construction should be rejected. First, an "area" is not a definite structure. Lange (Ex. B) ¶53-54. Second, Hilti's definition simply replaces a functional means-plus-function limitation with another means-plus-function limitation: "an area… for sealing a joint." Even if "sealing element" and "sealing section" are replaced with Hilti's proposed definition, a POSITA is left with no greater understanding of the structure that achieves this sealing function. And Hilti's phrase "positioned at an outer edge of the connection element/section" is not provided in the independent

claims and merely indicates the position of the "sealing element" or "sealing section" relative to other components of the joint sealing tape; it does not provide any further structure of the sealing element. Despite Hilti's characterization, its construction is not the plain meaning of "sealing section," but instead improperly imports material from the specification—namely: "Preferably, the sealing elements are positioned at the outer edge of the connection element." '036 Patent at 2:65-67. The only support Hilti cites for its purported "plain meaning" construction is Fig. 1a, but aside from consclusorily asserting that Fig. 1a supports its construction, Hilti provides no further explanation. Indeed, Hilti's construction would actually render claim 3[11] of the '036 Patent redundant, circular, and nonsensical. *See supra* at 30-31 (discussing the same for claim 2 of the '091 Patent).

The Court should also reject Hilti's alternative means-plus-function construction. In defining the structure as "a deformable material" without proposing any definite structure, Hilti's proposed means-plus-function construction is no better than the original claim language, "sealing element"/"sealing structure," which, as discussed above, fails to recite sufficiently definite structure for performing the claimed function.

[11] Claim 3 recites, in part, "wherein the sealing elements are positioned on an outer edge of the connection element."

The corresponding structure of the "sealing element" disclosed by the '036 Patent's specification[12] encompasses both (i) a type of material capable of "sealing a joint between a first component and a second component" and (ii) various geometric profiles of the material that facilitate "sealing a joint between a first component and a second component." Lange (Ex. B) ¶48-52; '036 Patent at 6:1-6; 6:17-28.

As for the material properties, the parties agree that it must be a deformable material, but disagree about whether it must be plastically deformable in addition to elastically deformable.

Importantly, the specification makes clear that sealing elements must include a deformable material that "resumes its shape after compression":

> According to the invention, the sealing elements consist of a deformable material. The material can be either plastically or elastically deformable, in this regard. ***In particular, the sealing elements consist, at least in part but preferably entirely of a material that resumes its shape after compression***, such as, for example, foam material, foam rubber, cellular rubber or the like.

'036 Patent at 7:6-12; 7:13-33. Hilti's argument that the material can be plastically or elastically deformable ignores the specification's clear and unambiguous teaching.

[12] For ease of reference, only the '036 Patent is cited here. The '528 Patent makes the same references.

The specification also specifies that the structure that accomplishes the claimed "sealing" function further includes a particular cross section. The specification repeatedly refers to various cross-sections and explains their importance. '036 Patent at 6:21-28 ("Round profile and rectangular profile are particularly preferred, with rectangular profile being most preferred. However, other or mixed cross-section forms are also conceivable and possible, such as, for example, a rectangular profile having rounded corners, **as long as the sealing elements border on the two components after installation of the joint sealing tape and can close off the joint that exists between the two components**."); 4:25-41; 6:1-6; 6:7-16; 6:29-63; 13:47-57; 14:1-11; 14:24-35; 14:47-58; 15:16-26. Thus, the specification explains that both the material (as explained above) *and* the cross-section shape contribute to the function of "sealing." The specification also describes the following geometric cross sections: round, oval, polygonal, square, rectangular, parallelogram, triangular, or rectangular with rounded corners. *See id.* at 4:25-41. Accordingly, STI's construction is consistent with the specification. Hilti's argument that a specific cross section is not necessary structure ignores the specification's teaching described above.

c. Hilti's Reply Position

According to STI, these terms should be construed—contrary to the presumption against doing so—to be means-plus-function elements. STI argues

(*supra* at 74) that this is so because "the phrase 'a sealing element' does not provide notice of any ***specific structure***." *See also* Ex. J at 106:24-109:18 (Lange requiring the claim to recite a specific shape to avoid means-plus-function construction). STI's "argument reflects an unfounded belief that a finding of 'sufficiently definite structure' under *Williamson* requires showing a '***specific structure***.'" *Syneron Med. Ltd. v. Invasix, Inc.*, 2018 WL 4696971, at *11 (C.D. Cal. Sept. 5, 2018), *report and recommendation adopted*, 2018 WL 11351325 (C.D. Cal. Sept. 28, 2018). But that is not the case. Instead, "*Williamson* only requires a showing that the term is understood by a POSITA to have a 'sufficiently definite meaning as ***the name*** for structure.'" *Id.* (citing *Williamson*, 792 F.3d at 1349). "To determine whether a claim recites sufficient structure, 'it is sufficient if the claim term is used in common parlance or by persons of skill in the pertinent art to designate structure, even if the term covers a broad class of structures and even if the term identifies the structures by their function.'" *Skky, Inc. v. MindGeek, s.a.r.l.*, 859 F.3d 1014, 1019 (Fed. Cir. 2017) (citation omitted).

Here, the terms "sealing element" and "sealing sections" designate structural portions of a joint sealing tape and would be understood by a POSITA as names for structure. Ex. K, ¶¶41-44. Claim 1 of the '036 patent is directed to a "joint sealing tape," which includes "an elongated connection element and at least two sealing elements, which are positioned on the connection element" and that run "in a

longitudinal direction of the connection element." *Id.*, ¶42. Similarly, claim 1 of the '528 patent is directed to a "joint sealing tape," which includes "a connection section," and "a first sealing section and a second sealing section," each of which comprises an "intumescent material" and extends in "the longitudinal direction" of the connection section. *Id.*

From these recitations, a POSITA would readily recognize "sealing elements" and "sealing section" as the names for the structure of a joint sealing tape, which will extend across the sides of a ceiling track in a longitudinal direction as shown in the below image with reference to the bi-directional blue arrow. *Id.*

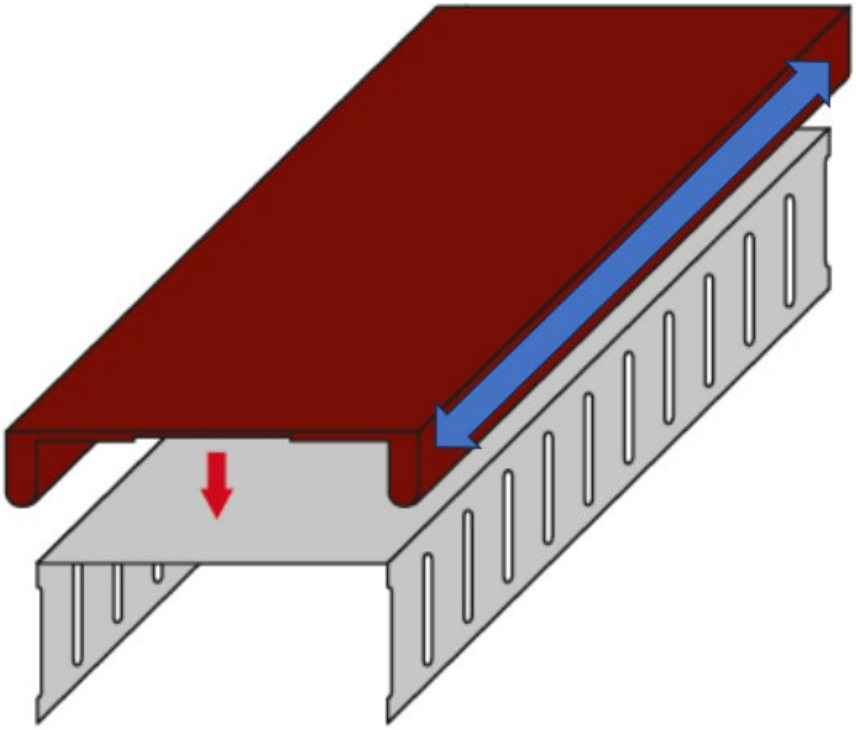

These definite structures will extend into the gap between the drywall and ceiling track thereby "sealing" that area as shown in the image below from Hilti's promotional materials. *Id*. at ¶43; Ex. J at 104:17-105:10.

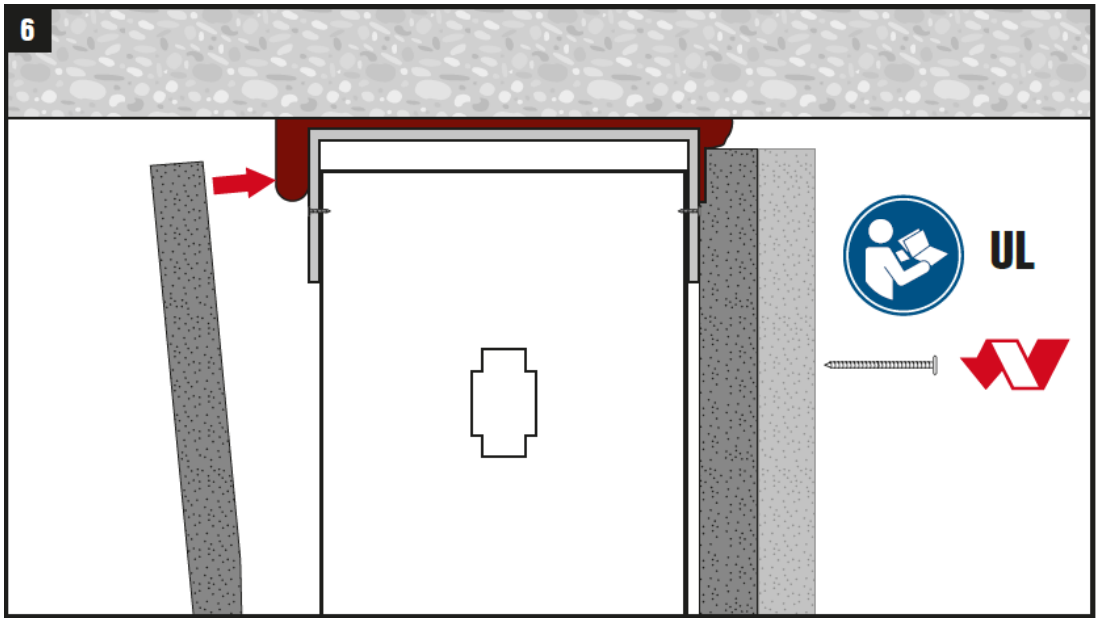

In view of the foregoing, Dr. Sturges explains that a POSITA recognizes "sealing elements" and a "sealing section" as a sufficiently definite name for structure. *Id.*, ¶44. Indeed, the specification itself refers to the side portions of the sealing tape as "sealing elements" more than 150 times demonstrating that a POSITA recognizes a "sealing element" as the name for the structure. *See*, *e.g.*, '036 patent at 13:48-51 ("The joint sealing tape 1 in FIG. la has two sealing elements 3a and 3b, which are positioned on the outer edges of the connection element 2.").

As explained *supra*, STI confuses the *Williamson* analysis by requiring a "specific structure." However, under STI's flawed legal understanding, these terms

would *still* not be means-plus-function terms. Instead, the dependent claims identify specific structures included in the class of structures referred to by the names "sealing elements" and "sealing section." *See* '036 patent, claims 5-9; '528 patent, claims 8, 17. For example, claim 7 of the '036 patent recites that "the sealing elements consist of a deformable material," which indicates that the sealing elements of claim 1 include both deformable and non-deformable materials. *See* Ex. J at 115:10-17.

STI's also invites error in arguing that the corresponding structure (for the alleged means-plus-function elements) must be a deformable structure that resumes its shape after deformation, which the specification refers to as "elastically deformable." '036 patent at 4:48-52. However, the specification clearly states: "According to the invention, the sealing elements consist of a deformable material. The material can be ***either*** plastically or elastically deformable." '036 patent at 7:6-8. While STI argues that preferred embodiments consist at least in part of elastically deformable material, "[i]dentification of corresponding structure may embrace more than the preferred embodiment" and "encompasses ***all*** structure in the specification corresponding to that element and equivalent structures." *Micro Chem.*, 194 F.3d at 1258. Because the specification clearly links the sealing elements to both plastically and elastically deformable materials, both materials must be included as corresponding structures in a means-plus-function construction.

STI's argument (*supra* at 78) that the cross section of the sealing element (*i.e.*, the shape) is necessary structure for sealing is also in error. Rather than necessary structure, the specific type of cross section "merely enable[s] the pertinent structure to operate as intended ...." *Asyst Techs., Inc. v. Empak, Inc.*, 268 F.3d 1364, 1371 (Fed. Cir. 2001). Indeed, as STI notes (*id.*), the specification explains that "other or mixed cross-section forms are also conceivable . . . as long as the sealing elements border on the two components after installation of the joint sealing tape and can close off the joint that exists between the two components." The cross-section enables sealing, but the structure that actually forms the seal is the deformable material.

d. STI's Sur-Reply Position

Hilti pounces on the deposition testimony of STI's technical expert—a non-lawyer—to argue that STI is overreaching. To be sure, STI's position—consistent with *Williamson*—is that the claims do not provide "sufficiently definite structure" for the sealing element/section. *See, e.g.*, Ex. B ¶47 (explaining that "means-plus-function…terms 'element' and 'section' do not suggest any definite structure for performing the function of 'sealing.'"). Unlike the disputed term in *Skyy*, there is no evidence that "sealing element/section" is commonly used to designate structure. *Skyy*, 859 F.3d at 1020 ("wireless device is used in common parlance... to designate structure").

Notably, to support its argument (*supra* at 80-81) that a POSITA would recognize "sealing elements/section" as names for the structure of a joint sealing tape," Hilti resorts to extrinsic sources—images from its own marketing materials—which have no bearing on the claim language.

Further, the number of times a patent specification mentions a term has no bearing on whether it is a means-plus-function term, and Hilti provides no legal support for its position. Indeed, this is entirely STI's point—i.e., that this is a means-plus-function element, hence resort to the specification to define the structure is required.

Moreover, *Micro Chem* does not support Hilti's position that plastically deformable materials must be included in the means-plus-function construction. *Micro Chem* explains that it is impermissible to incorporate "structure from the written description beyond that necessary to perform the claimed function." *Micro Chem.*, 194 F.3d at 1258. The *Micro Chem* quote Hilti relies on (*supra* at 82)—that "[i]dentification of corresponding structure…encompasses all structure in the specification"—relates to multiple different embodiments corresponding to the same function. As explained above, the specification makes clear that the sealing element must include ***at least*** an elastically deformable material. To be sure, STI's construction does not *exclude* plastically deformable materials altogether, but

instead makes clear that the sealing elements cannot be made entirely of such materials to the exclusion of an elastically deformable material.

Finally, *Asyst Techs* is inapposite. There, the Court held that "communication line" was not structure because it did not perform the relevant function. Here, the cross-section and material together perform the function of sealing.

6. "at a distance from and next to one another"

Hilti	STI
Not indefinite	This claim limitation renders claim 1 indefinite under 35 U.S.C. § 112(b).

a. Hilti's Opening Position

STI argues that the inclusion of this term in claim 1 of the '036 patent renders that claim indefinite. (JCCC at p. 4.) It is STI's burden to prove indefiniteness by clear and convincing evidence. *Microsoft*, 564 U.S. at 95. STI will be unable to carry its burden because the scope of claim 1 of the '036 patent is capable of being understood with reasonable certainty. *See Nautilus*, 572 U.S. at 912 & n.10. Once STI attempts to make its initial showing on its invalidity defense, Hilti will respond in greater detail, including possibly with expert testimony.

b. STI's Answering Position

Claim 1 of the '036 Patent requires that the "at least two sealing elements . . . are positioned on the connection element at a distance from and next

to one another." This claim is indefinite because a POSITA would not understand the boundaries of the spatial relationship between two components when they are "at a distance from and next to one another" or how to define whether two components are "next to" one another.

"The claims, when read in light of the specification and the prosecution history, must provide objective boundaries for those of skill in the art." *Interval Licensing LLC v. AOL, Inc.*, 766 F.3d 1364, 1371 (Fed. Cir. 2014). Simply identifying "*some standard* for measuring the scope of the [limitation]" is not enough. *Id.* at 1370-71.

Here, the intrinsic evidence provides no guidance for determining when two components are far enough apart to cease being "next to" one another. The specification's discussion of "next to" merely repeats the claim language verbatim, and thus provides no guidance. *See* '036 Patent at Abstract; 2:61-63; 5:10-12; 5:44-46. Accordingly, a POSITA is unable to reasonably ascertain the scope of the claim because it is not possible to determine when two sealing elements are or are not "next to" one another. Lange (Ex. B) ¶55-56; *NuVasive, Inc., v. Alphatec Holdings, Inc.*, 2021 WL 3886211, at *4-*6 (S.D. Cal. 2021 Aug. 31, 2021) (finding indefinite a claim element requiring a marker to be "proximate" to midline and "the specification and prosecution history provide no notice of the distance at which a marker could be placed away from the midline and still be proximate to the midline.").

c. Hilti's Reply Position

STI argues (*supra* at 85-86) that this term is indefinite because a POSITA allegedly "would not understand the boundaries of the spatial relationship between two components when they are 'at a distance from and next to one another' or how to define whether two components are 'next to' one another." However, STI overcomplicates this straightforward term. The "sealing elements" are "at a distance from . . . one another" when they are not touching. Ex. K, ¶29. Further, the sealing elements are "next to one another" when they are adjacent to each other. *Id*., ¶32.

STI's argument overlooks the fact that the "sealing elements" are "positioned on the connection element" as part of a joint sealing tape and running in the longitudinal direction of the connection element. The specification explains that the joint sealing tape "can be universally used for different profile widths of the U profile of a drywall framework, particularly for the usual profile widths of 2 ½ inches (64 mm), 3 ⅝ inches (92 mm), 4 inches (102 mm), 6 inches (152 mm), 8 inches (203 mm), and 10 inches (254 mm)." '036 patent at 2:36-40; Ex. K, ¶30.

A POSITA understands that the connection element will be installed on the horizontal portion of a ceiling track. Ex. K, ¶31. Accordingly, the width of the connection element will match the width of the ceiling track. *Id*. Because the sealing elements are "positioned on the connection element," the distance between them is defined by the width of the connection element/ceiling track. *Id.*, ¶31-32. And

because a POSITA is familiar with the range of commonly available ceiling track sizes as identified in the specification, a POSITA is able to easily—and objectively—understand the distance between the sealing elements while recognizing how the sealing elements are "next to one another." *Id*.

The embodiment of Fig. 1a below is illustrative.

Fig. 1a

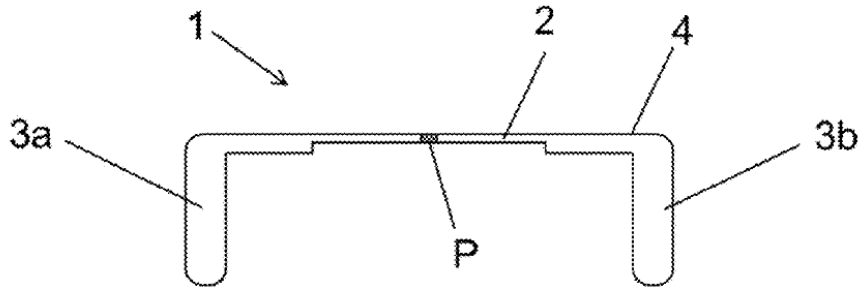

Sealing elements 3a and 3b are "at a distance from and next to one another" with the distance between determined by the width of the connection element, which corresponds to the width of a standard width ceiling track. *Id.*, ¶32. STI falls short of demonstrating indefiniteness by clear and convincing evidence.

d. STI's Sur-Reply Position

Hilti's Reply fails to address the main problem with this phrase: a POSITA cannot determine when two sealing elements are both "at a distance from" and "next to one another" and when they are not. Hilti argues that the sealing elements are "next to one another" when they are "adjacent," but does not explain what adjacent

means in this context or its boundaries. In his deposition, Dr. Sturges could not identify any upper bound on "next to":

Q. [H]ow far apart can the sealing elements be from one another and still be considered next to each other?

A. As far as necessary to apply them to a sealing track or similar structure.

Ex. P, 43:15-19.

Hilti's remaining argument focuses on the width of the ceiling track and is irrelevant because the ceiling track is not part of the claim.

7. "the perforation is . . . configured to improve ease of separation of two halves of the joint sealing tape"

Hilti	STI
Not indefinite	This claim limitation renders claim 1 indefinite under 35 U.S.C. § 112(b).

a. Hilti's Opening Position

STI argues that the inclusion of this term in claim 1 of the '036 patent renders that claim indefinite. (JCCC at p. 4.) It is STI's burden to prove indefiniteness by clear and convincing evidence. *Microsoft*, 564 U.S. at 95. STI will be unable to carry its burden because the scope of claim 1 of the '036 patent is capable of being understood with reasonable certainty. *See Nautilus*, 572 U.S. at 912 & n.10. Once

STI attempts to make its initial showing on its invalidity defense, Hilti will respond in greater detail, including possibly with expert testimony.

b. STI's Answering Position

This limitation suffers from multiple deficiencies that prevent a POSITA from understanding the scope of the claim with reasonable certainty, and therefore is indefinite. Lange (Ex. B) ¶57. First, the phrase "two halves of the joint sealing tape" lacks antecedent basis or any other language tying it to the other components of the claim. For example, the claim makes no reference to "a first half" and "a second half." Thus, the meaning of the word "halves" in this claim is unclear. *Id.* ¶57.

Second, the claim is unclear as to what degree "ease of separation" must be improved and provides no objective measure to determine how this claim element can be met. The specification does not describe any way to measure the "ease of separation." The description is limited to likening "easy separation" to "tearing apart," but this provides no insight regarding how a POSITA would measure an improvement in "ease of separation." '036 Patent at 5:52-54 ("This perforation allows easy separation (tearing apart) or alternatively pulling apart of the two joint sealing tape halves."). At best, this is a subjective standard. There is no objective criterion for determining whether a perforation "improve[s] ease of separation." Accordingly, a POSITA cannot determine when a perforation would be "configured to improve ease of separation," rendering claim 1 indefinite. *See, e.g., CA, Inc. v.*

Netflix, Inc., 2021 WL 5323413, at *14 (E.D. Tex. Nov. 16, 2021) (finding claim terms "maximizing" and "minimiz[es/ing]" indefinite because "the claim language and specification fail to provide an objective standard for measuring" whether the claim terms were met); *Avenue Innovations, Inc. v. E. Mishan & Sons Inc.*, 310 F. Supp. 3d 457, 463-67 (S.D.N.Y. 2018) (finding claim limitation reciting "operative position most convenient to the user" indefinite because scope of "convenient" is subjective); Lange (Ex. B) ¶58.

c. Hilti's Reply Position

STI argues (*supra* at 90-91) that this term is indefinite because it is "unclear" "to what degree 'ease of separation' must be improved." However, in addressing the "connection element" term, Lange opined that Charlson's "insulators are fabricated from one piece of material" and "***perforated in between for ease of separation***." Ex. B, ¶43. This Freudian slip reveals that a POSITA fully understands what is meant by the term "ease of separation" as it relates to a perforated connection element. Indeed, during his deposition, Lange testified that when he used the phrase "ease of separation" he meant that "it facilitates separation." Ex. J at 98:6-99:4. Dr. Sturges agrees. Ex. K, ¶35.

Indeed, a POSITA understands that "configured to improve ease of separation" simply means that the perforated joint sealing tape is easier to separate into two halves as compared to a non-perforated tape. *Id.* Consistent with this, the

specification explains that the "perforation allows easy separation (tearing apart) or alternatively pulling apart of the two joint sealing tape halves." '036 patent at 5:52-54.

STI's indefiniteness argument again relies on Lange who asserts that "the claim does not first introduce 'a first half' or 'a second half,'" which Mr. Lange asserts makes the claim unclear. Ex. B, ¶57. However, a POSITA understands the concepts of "two halves" without needing the claim to identify "a first half" or "a second half." There is simply no reasonable argument that the concept of "two halves" is ambiguous. Indeed, the claim language is clear that the "two halves" are of "the joint sealing tape." Ex. K, ¶36.

Perhaps recognizing the incredibility of the notion that a POSITA would not understand the phrase "two halves," Lange pivoted during his deposition to argue that a POSITA would not know if the claim recited longitudinal halves or latitudinal halves. Ex. J at 124:15-20. A POSITA would not adopt that reading in view of the specification, which explains that an object of the invention is to provide a sealing tape that "can be universally used for different profile widths of the U profile of a drywall framework . . ." '036 patent at 2:36-40; *see also* Ex. K, ¶37. A latitudinal perforation would not allow that to be accomplished. *Id*. STI has failed to demonstrate indefiniteness.

d. STI's Sur-Reply Position

Hilti conflates the general concept of "ease of separation" with the claim requirement of a perforation "***configured to improve*** ease of separation." In doing so, Hilti misconstrues Mr. Lange's testimony regarding the "connection element" term. Mr. Lange used "ease of separation" in a different context to describe perforations in general—it was not a Freudian slip. Understanding what "ease of separation" means is not tantamount to understanding to what degree "ease of separation" must be "improved" to satisfy the claim.

Further, Hilti now seems to propose a construction (*supra* at 91-92) never before presented in the JCCC or its earlier briefing: "'configured to improve ease of separation'…means that the perforated…tape is easier to separate into two halves…compared to a non-perforated tape." But this newly proposed construction does not save the claim from indefiniteness because a POSITA is still unable to reasonably determine whether a particular perforation falls within the scope of the claim. By requiring that the perforation be "configured to improve ease of separation," the claim implies that some perforations ***improve*** ease of separation, while others do not. The intrinsic record provides no guidance to a POSITA for distinguishing between a perforation that is "configured to improve ease of separation" (as claimed) and a perforation that is ***not*** configured to improve ease of separation (and would fall outside of the claim).

8. "the sealing elements and the connection element consist of one material in one piece, and are sheathed with plastic film"

Hilti	STI
Not indefinite This term should be construed according to its plain meaning, as informed by the intrinsic record, which is "the sealing elements and the connection element (x) consist of one material in one piece, and (y) are sheathed with a plastic film." If this term is not construed according to its plain and ordinary meaning, it should be construed as Hilti proposes based on the intrinsic record.	This claim limitation renders claim 1 indefinite under 35 U.S.C. § 112(b). Alternatively, this limitation means: "individually the first sealing element consists of one material in one piece and is sheathed with a plastic film, the second sealing element consists of one material in one piece and is sheathed with a plastic film, and the connection element consists of one material in one piece and is sheathed with a plastic film"

a. Hilti's Opening Position

STI argues that the inclusion of this term in claim 11 of the '036 patent renders that claim indefinite. (JCCC at p. 5.) It is STI's burden to prove indefiniteness by clear and convincing evidence. *Microsoft*, 564 U.S. at 95. STI will be unable to carry its burden because the scope of claim 11 of the '036 patent is capable of being understood with reasonable certainty. *See Nautilus*, 572 U.S. at 912 & n.10. Once STI attempts to make its initial showing on its invalidity defense, Hilti will respond in greater detail, including possibly with expert testimony.

As an alternative, STI argued that this term means "individually the first sealing element consists of one material in one piece and is sheathed with a plastic

film, the second sealing element consists of one material in one piece and is sheathed with a plastic film, and the connection element consists of one material in one piece and is sheathed with a plastic film." (JCCC at p. 5.) STI's construction is inconsistent with the plain language of this term, which provides—consistent with every embodiment depicted in the figures discussed *supra*—that the sealing elements and connection elements consist of a single piece. STI's construction would thus improperly require that each element be a separate piece. As discussed in connection with "connection element" *supra*, claim 1 encompasses both one-piece and multi-piece constructions, and claim 11 is focused on a one-piece construction.

The Court should construe this term according to its plain and ordinary meaning, which is "the sealing elements and the connection element (x) consist of one material in one piece, and (y) are sheathed with a plastic film." (*Id.*) Those three elements are collectively one piece, with that one piece sheathed with a plastic film.

b. STI's Answering Position

Claim 11 of the '036 Patent is indefinite because this limitation is susceptible to at least two different meanings: (1) individually the first sealing element consists of one material in one piece and is sheathed with a plastic film, the second sealing element consists of one material in one piece and is sheathed with a plastic film, and the connection element consists of one material in one piece and is sheathed with a

plastic film (STI's proposed alternative construction); and (2) collectively the sealing elements and the connection element are formed together of one material in one piece, and are together sheathed with a plastic film (essentially Hilti's proposed construction). Accordingly, a POSITA cannot understand the scope of the claim with reasonable certainty. Lange (Ex. B) ¶59-60.

The specification does not clarify this ambiguity. It describes the sealing elements, connection element, and entire tape as being produced in one piece from one material, or in multiple pieces. '036 Patent at 6:64-67 ("The sealing elements . . . can be produced from or consist of a material in one piece, or can be produced from or consist of multiple materials in multiple parts . . ."); 8:29-31 ("The connection element can be produced in one piece from one material or in multiple pieces, also from different materials."); 8:35-37 ("The joint sealing tape . . . can be produced in one piece from one material or in multiple pieces, also from different materials."). Thus, the specification does not clarify this ambiguity, and the claim is indefinite. Lange (Ex. B) ¶60.

If the Court decides claim 11 is not indefinite, this limitation should be construed as "individually the first sealing element consists of one material in one piece and is sheathed with a plastic film, the second sealing element consists of one material in one piece and is sheathed with a plastic film, and the connection element

consists of one material in one piece and is sheathed with a plastic film." This construction is consistent with the prosecution history and specification.

First, the specification explicitly describes embodiments in which the joint sealing tape is produced from multiple pieces. '036 Patent at 8:35-37. Second, if the Applicant intended for claim 11 to cover Hilti's proposed construction, it could have easily written it as the specification describes at 8:35-37 (i.e., the "joint sealing tape [is] produced in one piece from one material"). Instead, the Applicant chose to individually list the components (sealing elements and connecting elements), which suggests the patentee intended to draft the claim consistent with STI's construction. *See Becton, Dickinson & Co. v. Tyco Healthcare Grp., LP*, 616 F.3d 1249, 1254 (Fed. Cir. 2010) ("Where a claim lists elements separately, 'the clear implication of the claim language' is that those elements are 'distinct component[s]' of the patented invention.").

Finally, STI's construction is consistent with statements the Applicant made during prosecution to distinguish the "connection element" limitation from the prior art, as discussed above (at 58-60). A POSITA would understand the Applicant's arguments to require the connection element and sealing elements to be physically separate components in claim 1. Lange (Ex. B) ¶61-62; *see also supra* at 56-60. Accordingly, because the connection element and sealing elements of the joint sealing tape are physically separate components in claim 1, STI's proposed

construction of claim 11 is consistent with claim 1. Hilti's construction, by contrast, is at odds with claim 1.

c. Hilti's Reply Position

STI argues (*supra* at 95-96) that this term is indefinite because it could both refer to a tape consisting of a single piece or to a tape where "individually" the sealing and connection elements each consist of one separate piece (*e.g.,* three separate pieces). STI's indefiniteness argument is flatly foreclosed by the claim language itself, which says that "the sealing elements and the connection element consist of . . . one piece." To argue otherwise, STI reads the word "individually" into the claim such it would read: "***individually***, the sealing elements and the connection element consist of one material in one piece, and are sheathed with a plastic film." But this is just not what the claim says, and a POSITA is able to understand the scope of this term with reasonable certainty. Ex. K, ¶¶38-39.[13] The Court should adopt the plain meaning articulated by Hilti.

d. STI's Sur-Reply Position

Hilti argues that STI reads "individually" into the claim. Hilti's construction, however, effectively reads "collectively" or "together" into the claim. The claim does not state that the "tape consist[s] of a single piece." Based on the plain language

[13] As explained above (at 14-17), Lange's opinion on this term is fundamentally flawed.

of the claim, it is unclear which of the two potential interpretations is correct (i.e., whether the components "individually" or "collectively" "consist of one material in one piece"). In arguing against STI's alternative construction, Hilti highlights precisely why claim 11 is indefinite. The claim can be read in two different ways, and it is not reasonably clear which reading is correct. STI's alternative construction attempts to make sense of this claim, consistent with the elements of claim 1 from which it depends.

9. "coupled to"

Hilti	STI
This term should be construed according to its plain meaning, as informed by the intrinsic record, which is "connected to as one-piece with or separately from" If this term is not construed according to its plain and ordinary meaning, it should be construed as Hilti proposes based on the intrinsic record.	"connected to"

a. Hilti's Opening Position

The parties' dispute as to this term from claims 1 and 12 of the '528 patent relates to the parties' disputes concerning "connection section"/"connection element." The term appears in claim 1 as follows: "a first sealing section and a second sealing section ***coupled to*** respective sides of the connection section[.]" ('528 patent at 16:64-65.) Similarly, the term appears in claim 12 as follows: "a

connection section ***coupled to*** the sealing section at a location between the first and second areas." (*Id.* at 18:3-4.)

STI argues that this term means "connected to." (JCCC at p. 9.) Hilti agrees, in part, but clarifies that "coupled to" means "connected to ***as one-piece with or separately from***." (*Id.*) This construction includes both the joint sealing tape embodiment of the figures where the joint sealing tape consists of one piece as well as the embodiment where the joint sealing tape consists of multiple pieces as discussed *supra*. The Court should adopt Hilti's construction because it would include both disclosed embodiments while STI's would improperly exclude a preferred embodiment (*i.e.*, the one-piece embodiments), which construction is "rarely, if ever, correct." *MBO Lab'ys.*, *Inc. v. Becton*, *Dickinson & Co.*, 474 F.3d 1323, 1333 (Fed. Cir. 2007); *see also Pfizer, Inc. v. Teva Pharms., USA, Inc.*, 429 F.3d 1364, 1374 (Fed. Cir. 2005) (finding proposed claim construction improper because "[a] claim construction that excludes a preferred embodiment . . . is 'rarely, if ever, correct.'"); *Verizon Servs. Corp. v. Vonage Holdings Corp.*, 503 F.3d 1295, 1305 (Fed. Cir. 2007) (rejecting proposed claim construction because it "would exclude several examples in the specification").

b. STI's Answering Position

The Court should construe "coupled to" as "connected to." STI's construction is consistent with the plain meaning of the term as understood by a POSITA and the

intrinsic record. Notably, Hilti agrees that "coupled to" means at least "connected to." The parties dispute whether the term "coupled to" requires further elaboration beyond "connected to"; STI submits that it does not because a POSITA would readily understand that "coupled to" means "connected to." Lange (Ex. B) ¶63-66.

First, "connected to" is consistent with the plain meaning of "coupled to." To "couple" means "to link together." *See* Ex. G (Merriam-Webster Dictionary (2016 ed.). Additionally, "connect" means "join, link." Accordingly, because both "connected to" and "coupled to" mean to "link" things together, STI's construction is consistent with the plain meaning of "coupled to."

Second, the specification supports STI's construction. When the specification describes the interface between the connection element and sealing elements,[14] it consistently describes them as being connected or attached. *See* '528 Patent at 8:49-64; 10:7-18.

Moreover, numerous other courts have construed "coupled to" as "connected to." *See, e.g., Allen Med. Sys., Inc. v. Schuerch Corp.*, 2020 WL 3489611, at *3 (D. Mass June 26, 2020) (construing "coupled to" as "joined or connected to"); *National Oilwell Varco, L.P. v. Auto-Dril, Inc.*, 2011 WL 3648532, at *24-26 (E.D. Tex. Aug. 16, 2011) (construing "coupled to" as "connected to").

---

[14] *See supra* at 56 (explaining that "connection *section*" must mean the same as "connection element"); *supra* at 72 (corresponding explanation for "sealing *section*").

Hilti argues that STI's construction excludes a "one-piece" tape embodiment disclosed in the specification. This argument rings hollow because the one-piece embodiment is not covered by claims 1 and 12. It is axiomatic that "where the patent describes multiple embodiments, every claim does not need to cover every embodiment." *Pacing Techs., LLC v. Garmin Int'l., Inc.*, 778 F.3d 1021, 1026 (Fed. Cir. 2015). "This is particularly true where," as here, "the plain language of a limitation of the claim does not appear to cover that embodiment." *Id.* Hilti does not otherwise identify any lexicography or other guidance from the intrinsic evidence supporting its construction.

Hilti's construction—"connected to as one-piece with or separately from"—should be rejected. Hilti overcomplicates this simple term by adding unnecessary language ("as one-piece with or separately from") that finds no support in the intrinsic record or even in the commonly understood dictionary definition of the word "couple." Hilti's language "connected to as one-piece" is nonsensical and would render claims 1 and 12 indefinite because it is unclear how a POSITA would determine whether two things are "coupled to" each other as one-piece as opposed to merely being one-piece construction that does not include elements "coupled" together. *See* Lange (Ex. B) ¶66. Worse still is the nonsensical and contradictory concept of being "connected to . . . separately from," which Hilti's construction contemplates.

Further, without any analysis, Hilti conclusorily asserts that "coupled to" should be read to cover both the "one-piece" and "multiple piece" embodiments disclosed in the specification. *Supra* at 100. This superficial argument ignores that the specification does not explicitly describe a one-piece embodiment with "sealing elements" that are coupled, connected, or attached to the "connection element." Rather, when generally referring to both embodiments (or individually to the one-piece embodiment), the specification explains that the sealing elements are "positioned on" the connection element (or vice-versa). *See, e.g.,* '528 Patent at 13:54-57 (describing FIG. 1a and explaining that "the connection element 2 is positioned laterally on the sealing elements 3a and 3b").

Finally, the plain language of "coupled to" necessarily excludes the one-piece joint sealing tape embodiment. If the claim drafter intended for the claims to cover the single-piece embodiment, he would have chosen different words. The plain language of this limitation does not cover the one-piece embodiment, and, therefore, the term "coupled to" should not be construed to cover it. Hilti's construction overreaches, is not supported by the intrinsic evidence, and is improperly designed for litigation driven reasons. *See McCarty v. Lehigh Val. R.R. Co.*, 160 U.S. 110, 116 (1895) ("we know of no principle of law which would authorize us to read into a claim an element which is not present, for the purpose of making out a case of

novelty or infringement"); *Helmsderfer v. Bobrick Washroom Equip., Inc.*, 527 F.3d 1379, 1383–84 (Fed Cir. 2008) ("Courts cannot rewrite claim language.").

c. Hilti's Reply Position

STI argues (*supra* at 100-101) that the term "coupled to" requires that the sealing sections be physically separate pieces as compared to the connection section. According to STI, this must be so because "coupled to" means "connected to" and "connect" means "join, link." STI acknowledges that its construction would exclude the specification's one-piece embodiment (which Lange argued may or may not exist), arguing that Hilti claimed the multi-piece embodiment in claims 1 and 12 by using the phrase "coupled to." STI overlooks the fact that claim 9 of the '528 patent recites that "the first sealing element the second sealing element and the connection section have ***a one-piece*** construction at least during the uninstalled state."[15] This means that claim 1 must be broad enough to cover a one-piece construction.

STI's argument that "connected to" requires physically distinct pieces is inconsistent with the specification, which refers to a "***connection*** element"—which as the name suggests—***connects*** two sealing elements that form part of the same one-piece construction depicted in the figures. Indeed, the ordinary usage of

[15] Hilti notes that there is an error in claim 9 in referring to "elements" while claim 1 refers to "section." However, a POSITA would still find it instructive that claim 9 refers to a "one-piece construction," which would indicate claim 1 covers both a one-piece construction and a multi-piece construction.

"connected" as meaning "joined" includes items that are joined together but are part of the same integral structure. For example, consider a cardboard box before it is constructed. The main body of the box is joined to the flaps that are taped together to form the bottom as well as the flaps that would be used to close the box. Those flaps are not physically separate pieces, but they are indisputably joined/connected to the main box body just like the sealing elements are joined/connected to the connection element in the disclosed embodiments.

STI argues (*supra* at 102) that Hilti's proposal to include the phrase "connected to as one-piece" within the construction of this term "is nonsensical" because a POSITA allegedly could not "determine whether two things are 'coupled to' each other as one-piece as opposed to merely being one-piece construction that does not include elements 'coupled' together." But the claim is directed to a joint sealing tape including distinct sealing sections—rather than just "two things"—and a POSITA understands how the sealing sections 3a and 3b below are coupled to the connection section, just like one understands how two weights are coupled to a barbell.

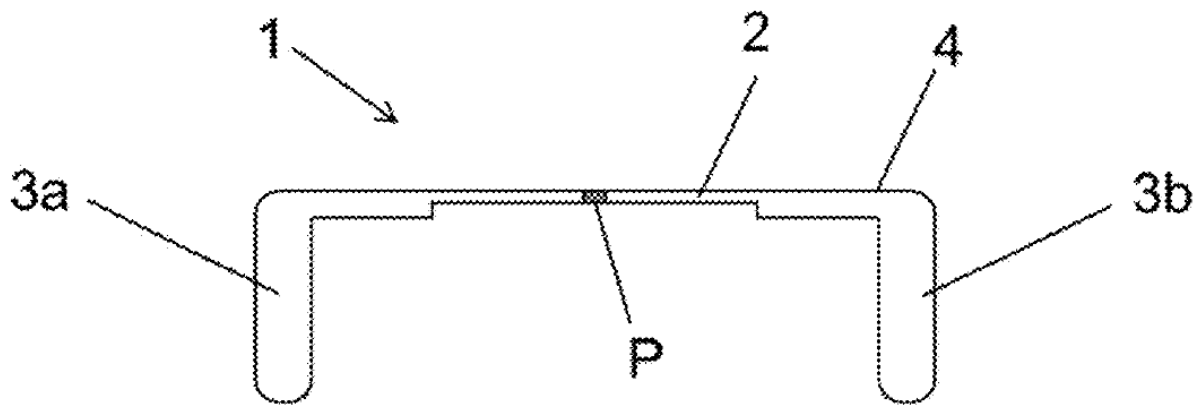

Finally, STI argues that Hilti's proposed construction is "nonsensical and contradictory" in including the phrase "connected to . . . separately from," but this again overlooks the claim language. As proposed, Hilti's construction would recite that the sealing sections are "connected to, separately or as one piece to respective sides of the connection section." This, quite sensibly, includes both disclosed embodiments.

d. STI's Sur-Reply Position

Contrary to Hilti's assertion (*supra* at 104), the fact that claim 9 of the '528 patent recites that "the first sealing element the second sealing element and the connection section have a one-piece construction at least during the uninstalled state" does not "mean[] that claim 1 must be broad enough to cover a one-piece construction." Indeed, claim 9 suffers from the same ambiguity described above with respect to claim 11 of the '036 patent—i.e., it is unclear whether claim 9 covers a tape having a one-piece construction, or a tape having individual parts that each have a one-piece construction.

Further, Hilti's argument that STI's construction is inconsistent with the specification fails to provide a single citation to the specification supporting its point. Hilti's inapposite and irrelevant cardboard box example fails. For instance, many cardboard boxes have flaps that are integral to the box (i.e., the box is cut from a single sheet of cardboard). These flaps are not "indisputably joined/connected" with any other portions of the box because they are integral to the box itself and need not be "connected."

Hilti's barbell analogy (*supra* at 105) similarly fails. Typical barbells receive separate and distinct weight plates that are secured with collars. *See, e.g.,* Ex. Q (excerpt from https://vitruve.fit/blog/olympic-barbell-vs-standard-barbell/, last visited on March 4, 2024):

Even many conventional fixed barbells are constructed of at least three separate pieces that are welded (i.e., "coupled") together—they are not one-piece constructions. *See, e.g.,* Ex. R (excerpt from https://yorkbarbell.com/product/rubber-fixed-pro-straight-barbell/#:~:text=The%20barbell%20heads%20are%20comprised,and%20is%20easy%20to%20clean, last visited on March 4, 2024):

Hilti's barbell example only further highlights that being "connected to as one-piece" is unclear.

Finally, Hilti's Reply introduces a new construction that is just as flawed as its original construction. In the JCCC and Hilti's Opening Brief, Hilti proposed the following construction: "connected to as one-piece with or separately from." In its Reply (*supra* at 106), Hilti shifts its construction to: "connected to, separately or as one piece to respective sides of the connection section." Both constructions are illogical, confusing, and contradictory because they state that two things are "connected to…separately." Hilti does not (because it cannot) explain how anything can be "connected to…separately."

10. '036 and '528 preambles

Hilti	STI
Limiting	Not limiting

a. Hilti's Opening Position

The Court should find that the preambles of the independent claims of the '036 and '528 patents are limiting. (JCCC at p. 24.) "In general, a preamble limits the invention if it recites essential structure or steps, or if it is 'necessary to give life, meaning, and vitality' to the claim." *Catalina Mktg. Int'l, Inc. v. Coolsavings.com, Inc.*, 289 F.3d 801, 808 (Fed. Cir. 2002). Here, the preambles give life, meaning, and vitality to the claims.

Starting with the ’036 patent, the preamble to claim 1 recites “A joint sealing tape for sealing a joint between a first component and a second component, said joint sealing tape comprising[.]” (’036 patent at 16:60-62.) This gives meaning to the claim by identifying that the claimed “connection element” and “sealing elements” are part of a “joint sealing tape.” In other words, the preamble is limiting because it “is essential to understand limitations or terms in the claim body.” *Catalina*, 289 F.3d at 808.

Additionally, claim 1 relies on the preamble for antecedent basis, later reciting that “the perforation is located within a central segment of the connection element and is configured to improve ease of separation of two halves of ***the joint sealing tape***.” (’036 patent at 17:2-5.) Dependence on the preamble for antecedent basis indicates that the preamble defines the claimed invention and is limiting. *Catalina*, 289 F.3d at 808 (“Additionally, dependence on a particular disputed preamble phrase for antecedent basis may limit claim scope because it indicates a reliance on both the preamble and claim body to define the claimed invention.”).

The preambles of claims 1 and 12 of the ’528 patent are likewise limiting. The preamble of claim 1 recites: “A joint sealing tape for sealing a joint between a first component and a second component, said joint sealing tape comprising[.]” (’528 patent at 16:60-62.) The preamble of claim 12 recites: “A joint sealing tape, comprising[.]” (*Id*. at 18:1.) Just like the ’036 patent, the preambles give meaning

to the claim which later identifies that the claimed "connection section" and "sealing section" are part of a "joint sealing tape." (*Id.* at 16:63-64.) In other words, the preamble is limiting because it "is essential to understand limitations or terms in the claim body." *Catalina*, 289 F.3d at 808.

b. STI's Answering Position

"[A] preamble is not limiting 'where a patentee defines a structurally complete invention in the claim body and uses the preamble only to state a purpose or intended use for the invention.'" *Catalina Mktg. Int'l, Inc.*, 289 F.3d at 808 (citation omitted). *Catalina Marketing* discusses four "guideposts" for determining whether a preamble is limiting, each of which support the conclusion that the preamble of claim 1 of the '036 Patent ("A joint sealing tape for sealing a joint between a first component and a second component, said joint sealing tape comprising") is not limiting.

Regarding the first guidepost, the preamble does not provide antecedent basis for any positively recited structure of the claimed joint sealing tape itself. Rather, to the extent language in the claim body first appears in the preamble, the preamble merely: (1) states an intended use for the invention and describes the environment in which the gasket is intended to be used, and (2) "give[s] a descriptive name to [the] components [of the gasket] as a whole." *Sentient Sensors, LLC v. Cypress Semiconductor Corp.*, 2021 WL 289410, at *5-*6 (D. Del. Jan. 28, 2021). Critically, it does not "provide essential structure to the claimed invention or any context

essential to understanding [its] components." *Id*. at *5-*6. For instance, the phrase "for sealing a joint between a first component and a second component" describes the intended use of the invention and does not include any part of its structure (i.e., it does not provide antecedent basis for positive structural limitations of the claimed joint sealing tape).

Regarding the second and third guideposts, the preamble is not essential to understand limitations in the claim body, nor does it recite additional structure underscored as important in the specification. The preamble merely provides a name for the claimed invention as a whole. It does not provide essential context to help a POSITA further understand the components of the claimed tape. *See* Lange (Ex. B) ¶67-74. Thus, it is not limiting. *See Arctic Cat Inc. v. GEP Power Prods., Inc.*, 919 F.3d 1320, 1329, (Fed. Cir. 2019) (holding "not every preamble reference to additional structure is limiting"); *Confluent Surgical, Inc. v. Hyperbranch Med. Tech., Inc.*, 2019 WL 1075539, at *3-*6 (D. Del. Mar. 7, 2019) (concluding preamble not limiting where claim bodies recited structurally complete invention).

Regarding the fourth guidepost, the Applicant did not rely on language from the preamble to distinguish the claims from prior art during prosecution. *See* Lange (Ex. B) ¶75. The only references to the preamble in the prosecution history are made to refer to the claimed invention as a whole.

Hilti argues that the preamble is limiting because it introduces the "joint sealing tape" language recited later in the claim. However, "joint sealing tape" is merely a label describing the whole invention. Even when the label is used later in the claim to refer to the whole arrangement of claimed components, such use does not make the preamble limiting.

Other courts agree. For example, in *Panasonic Corp. v. Magna International Inc.*, a preamble reciting "A camera module suitable for use for a vision system of a vehicle" was not limiting even though "camera module" was later recited in the claim body. 2022 WL 625089, at *18 (W.D. Tex. March 3, 2022). The *Panasonic* court explained: "The preambles do not define or refine the scope of the asserted claims . . . [or] . . . illuminate the meaning of any term in the claim, nor do they provide essential context for understanding the claim's meaning. Instead, the bodies of the claims recite a structurally complete invention." *Id. See also Sentient Sensors*, 2021 WL 289410 at *5-*6 (ruling that preamble term "an instrument controller" not limiting despite providing antecedent basis for the phrase "the instrument controller" in the claim body). The phrase "joint sealing tape" in the body of claim 1 of the '036 Patent is used in the same manner as the phrases "camera module" and "instrument controller" in *Panasonic* and *Sentient Sensors*, and the Court should reach the same result here.

The dispute over the preambles of claims 1 and 12 of the ’528 Patent is even easier to resolve. There is no antecedent basis issue because the claim bodies do not even refer back to the preambles. As explained above, the preambles merely provide a descriptive name to the claimed components. While claim 1 also describes an intended use “for sealing a joint between a first component and a second component,” claim 12 does not even provide that. Hilti appears to argue that the preambles provide context “essential to understand limitations or terms in the body,” but fails to provide any support.

c. Hilti’s Reply Position

STI’s brief shows why the preambles of the ’036 and ’528 patents should be construed as limiting: to breathe life, meaning, and context into the claims. For example, without the ’528 patent’s reference to a joint sealing tape, the claims recite only a structure with a connection section including a perforation and sealing sections. The preambles provide context and meaning to the claims and should be construed as a limitation.

d. STI’s Sur-Reply Position

Hilti’s reply does virtually nothing to rebut STI’s Answering position. Hilti’s conclusory statement that the preambles “provide context and meaning to the claims” is insufficient to convert them into limitations. See, e.g., *Symantec Corp. v. Comput. Associates Intern., Inc.,* 522 F.3d 1279, 1289 (Fed. Cir. 2008) (“[I]t is

assumed that the preamble language…merely provides context for the claims" and "does not suggest that the preamble imposes a limitation.").

III. STI'S ASSERTED PATENTS

A. INTRODUCTION

1. STI's Opening Position

STI maintains that no claim terms or phrases of STI's asserted U.S. Patent Nos. 9,157,232 ("'232 patent") and 10,143,868 ("'868 patent") require construction, and the preambles of the asserted claims are not limiting. The '232 patent is directed to a gasket for insulating a joint between a wall and a floor in a building. The '868 patent is directed to a firestopping apparatus with openings for cables that can seal around the cables during a fire.

To the extent express constructions are needed, STI's proposals are supported by the intrinsic record and the plain meanings of the terms. By contrast, Hilti's proposed constructions improperly narrow the claims by merely repeating the claim language verbatim and adding additional words that appear nowhere in the claims. Hilti's constructions do not clarify the claim language or simplify any matters for the Court or jury. Instead, Hilti improperly attempts to rewrite the claims and import limitations describing exemplary embodiments to avoid infringement.

2. Hilti's Answering Position

STI's Opening Brief attempts to narrow certain of its broadly drafted claims while at the same time attempting to broaden certain of its narrowly drafted claims.

STI invokes this tactic based on whether it is concerned with proving infringement or defending against invalidity. However, claim construction does not depend on the subject motivations of a patent infringement plaintiff. Hilti's proposed constructions appropriately account for the intrinsic record and the viewpoint of a person of ordinary skill in the art in view of the intrinsic record. Furthermore, Hilti establishes below that claim 6 of the '232 patent is indefinite due to its recitation of a wall configuration that is "wider than standard." This term of degree fails to provide an objective boundary against which to measure claim scope. Hilti's Answering Brief is supported by the Declaration of Robert H. Sturges, Jr., Ph.D., P.E., a person of ordinary skill in the art as Exhibit 20.

3. Hilti's Sur-Reply Position

STI's Reply brief largely serves to highlight the correctness of Hilti's positions. The Court should adopt Hilti's constructions.

B. '232 PATENT – DISPUTED TERMS

1. "An adjustable head-of-wall insulating construction for sealing a head-of-wall area between a ceiling thereabove and a wall configuration therebelow which is wider than standard and which includes a ceiling track" (preamble, claim 6)

STI	Hilti
Not indefinite, not limiting, and no construction needed.	Indefinite because the preamble is limiting and includes the term "wider than standard."

Alternatively: "a gasket for sealing an area between a ceiling and a wall that can be used with a ceiling track that makes use of enlarged sized studs or has multiple stud construction such as double studded walls." The word "adjustable" is not limiting and needs no construction. To the extent it is found limiting, it should be construed according to its plain meaning.	If not indefinite, the preamble is limiting and this term should be construed according to its plain meaning, as informed by the intrinsic record, which is "a head-of-wall insulating construction configured for use in sealing the outermost track side section on each side of a head-of-wall area between a ceiling thereabove and a wall configuration therebelow, which is adjustably variable in lateral dimension to accommodate wider than standard ceiling tracks (i.e., wider in lateral dimensions than a typical commercially available ceiling track)."

a. STI's Opening Position

i. The preamble is not limiting.

The claim body defines a structurally complete invention; none of the structure of the claimed "insulating construction" itself is presented in the preamble. Thus, the preamble does not limit the claim. *See Catalina Mktg. Int'l, Inc.*, 289 F.3d at 808 (finding "preamble is not limiting where a patentee defines a structurally complete invention in the claim body and uses the preamble only to state a purpose or intended use for the invention."). *Catalina Marketing*'s guideposts support this analysis.

(a) Dependence on a disputed preamble phrase for antecedent basis, whether the preamble is essential to understand limitations in the claim body, and whether the preamble recites

additional structure or steps underscored as important in the specification

The preamble does not provide antecedent basis for any positively recited structure of the claimed gasket itself. Rather, to the extent language in the claim body first appears in the preamble, the preamble merely: (1) states an intended use for the invention and describes the environment in which the gasket is intended to be used, and (2) "give[s] a descriptive name to [the] components [of the gasket] as a whole." *Sentient Sensors,* 2021 WL 289410, at *5-*6. Critically, it does not "provide essential structure to the claimed invention or any context essential to understanding [its] components." *Id.* at *5-*6. For instance, certain items that are introduced in the preamble and later recited in the claim body—such as the wall and track sections—are not part of the claimed invention (a gasket). These terms merely describe the intended use of the invention and do not constitute any part of its structure (i.e., they do not provide antecedent basis for positive structural limitations of the claimed gasket itself). The specification explains the wall is a separate and distinct structure from the inventive insulating gasket. *See, e.g.*, '232 Patent (Ex. 1), 6:11-19; Expert Declaration of James William Jones Ph.D., P.E. Regarding Claim Construction ("Jones Decl.") (Ex. 5) ¶4-8. Thus, the preamble is not limiting. *See Arctic Cat Inc.*, 919 F.3d at 1329 (holding "not every preamble reference to additional structure is limiting"); *Confluent Surgical, Inc., Inc.*, 2019 WL 1075539, at *3-*6 (concluding preamble not limiting where claim bodies recited structurally complete invention

and did not claim the nature of the components utilized by claimed assembly/system).

(b) Reliance on preamble during prosecution to distinguish claimed invention from prior art

The applicant did not rely on the preamble during prosecution to distinguish the claims. *See* Jones Decl. (Ex. 5) ¶9.

ii. Even if limiting, the Preamble of the '232 patent is not indefinite.

Even if the Court finds the preamble limiting, the term "wider than standard" is not indefinite. A person of ordinary skill in the art ("POSITA") would understand what a "wider than standard" wall configuration means in this context, especially when read in light of the specification (see below). *See* Jones Decl. (Ex. 5) ¶9-10. The gasket is not limited to specific dimensions; this phrase allows for adjustability so it is capable of use with wider than standard walls. A POSITA would understand this plain meaning. *Id.* ¶10.

iii. If the Court finds the preamble limiting and decides to construe this phrase, it should adopt STI's construction.

STI's construction is supported by the intrinsic evidence. The specification consistently refers to the "head-of-wall insulating construction" as a "gasket." A POSITA would understand that it is a gasket "for sealing an area between a ceiling and a wall…". *See, e.g.*, '232 Patent (Ex. 1), 6:11-23; 6:31-35; 10:29-34; Jones Decl. (Ex. 5) ¶10-11. Additionally, a "wider than standard" wall configuration refers to a

wall having a ceiling track using, for example, enlarged size studs or a multiple stud construction such as double studded walls. The specification supports this interpretation. *See* '232 Patent (Ex. 1), 6:15-23; 6:36-40; 10:29-38; Jones Decl. (Ex. 5) ¶11-12.

iv. Hilti's construction is improper and unsupported by intrinsic evidence.

Hilti attempts to rewrite the preamble by injecting additional limitations. First, Hilti adds "for use in sealing the outermost track side section on each side of a head-of-wall area." By adding the words "use in," Hilti underscores that the language that follows merely states the intended ***use*** of the claimed invention. Additionally, nowhere does the specification use the phrase "outermost track side section." Hilti's attempt to add language that lacks intrinsic evidence support should be rejected.[16]

Second, Hilti adds the phrase "which is adjustably variable in lateral dimension to accommodate wider than standard ceiling tracks (i.e., wider in lateral dimensions than a typical commercially available ceiling track)" as a proposed construction for the everyday word "adjustable." In doing so, Hilti improperly imports "adjustably variable in lateral dimension" from the specification. This

[16] *See Helmsderfer*, 527 F.3d at 1383–84 ("Courts cannot rewrite claim language."); *K–2 Corp. v. Salomon S.A.*, 191 F.3d 1356, 1364 (Fed. Cir. 1999) ("Courts do not rewrite claims; instead, we give effect to the terms chosen by the patentee."); *Autogiro Co. of Am. v. United States*, 384 F.2d 391, 396 (Ct. Cl. 1967) ("Courts can neither broaden nor narrow the claims to give the patentee something different…").

language, however, is merely stated as a goal of the design; it does not limit the claims. '232 Patent (Ex. 1), 5:4-12; *Hill-Rom Services, Inc.*, 755 F.3d at 1371-74 ("[W]e do not read limitations from the embodiments in the specification into the claims."); *Resonate Inc. v. Alteon Websystems, Inc.*, 338 F.3d 1360, 1364–66 (Fed. Cir. 2003) ("[T]he written description is not a substitute for, nor can it be used to rewrite, the chosen claim language."); Jones Decl. (Ex. 5) ¶13. The commonplace word "adjustable" does not need construction or further clarification and should be given its plain and ordinary meaning. Hilti's construction is not the plain meaning, is unhelpful to the jury, and circularly defines "adjustable" using the word "adjustably" – confirming that "adjustable" itself needs no construction.

The phrase "a typical commercially available ceiling track" also does not appear in the specification and should not be added into the claim. *Supra* at 120, n.16. Additionally, "wider than standard" does not mean "wider in lateral dimensions than a typical commercially available ceiling track." *Supra* at 119-120; Jones Decl. (Ex. 5) ¶14.

b. Hilti's Answering Position

i. The preamble is limiting.

"Whether to treat a preamble as a limitation is a determination 'resolved only on review of the entire[ ] ... patent to gain an understanding of what the inventors actually invented and intended to encompass by the claim.'" *Catalina Mktg. Int'l,*

Inc., 289 F.3d at 808 (internal citations omitted).[17] As explained below, each of the four factors identified by STI (*supra* at 118-119) for determining whether a preamble is limiting weigh in favor of construing the lengthy preamble as a limitation.

(a) the preamble provides antecedent basis

Claim 6's preamble recites "a wall configuration therebelow which is wider than standard and which includes ***a*** ceiling track having a main track section . . . and ***a*** first track side section . . . and ***a*** second side track section." '232 patent at 13:19-23.[18] Element A.(1) in the claim body relies on the preamble for antecedent basis by reciting "a first gasket upper panel . . . positioned immediately above ***the*** main track section of ***the*** ceiling track." *Id*. at 13:30-32. Elements B.(1), C, D and E also rely on the preamble for antecedent basis in referring to "the main track section of the ceiling track." *Id*. at 13:46-47, 65-67, 14:4-6. Elements A.(2) and B.(2) likewise rely on the preamble for antecedent basis in referring to "***the*** first track side section" and "***the*** second track side section." *Id*. at 13:36-37, 53. Thus, every single element of claim 6 relies on the preamble for antecedent basis.

Similarly, claim 8 relies on the preamble for antecedent basis in referring to "***the*** wall configuration." *Id*. at 14:20. This pervasive reliance on the preamble for

[17] At the outset, Hilti notes that STI relies on the declaration of Dr. Jones. However, Jones admitted during his deposition that he did not consider what the inventor allegedly invented. Ex. 6 at 28:24-30:20, 55:22-58:23.

[18] The '232 patent is Appendix H to the Joint Claim Construction Chart. *See* D.I. 97-8.

antecedent basis demonstrates that the preamble is limiting.[19] *Catalina*, 289 F.3d at 808; Ex. 20, ¶¶24-26.

(b) the preamble is essential to understand the "insulating gasket" recited in claim 6

Claim 6 recites an "insulating gasket" including seven components. Each of those components is claimed with reference to its position on the ceiling track of the wider than standard wall configuration as recited in the preamble. Specifically, the gasket consists of "a first gasket upper panel" and "a second gasket upper panel" both of which are "positioned immediately above the main track section of the ceiling track and extending generally horizontally thereover." '232 patent at 13:30-33, 46-48. The claimed gasket also includes "a first gasket side panel," which is claimed as "extending . . . across the first track side section for insulating thereover" and "a second gasket side panel," which is claimed as "extending . . . across the second track side section for insulating thereover." *Id*. at 13:34-37, 50-53.

The gasket also includes first/second "panel adhesive means mounted on" the gasket upper panels between the upper panels "and the main track section of the

[19] To argue that the preamble does not provide limiting antecedent basis, STI relies on the Jones Declaration. Ex. 5, ¶¶5-7. However, during his deposition, Jones revealed that he simply does not understand the concept of "antecedent basis." For example, Jones incorrectly understood that "antecedent basis" "means usually the art that's cited that has preceded this particular patent." Ex. 6 at 33:17-24, 39:19-40:7, 123:19-124:16.

ceiling track to facilitate engagement therebetween." *Id*. at 13:63-14:5. Finally, Claim 6 recites a connecting strap "positioned above the main track section of the ceiling track." *Id*. at 14:6-7. Thus, contrary to STI's argument (*supra* at 118), claim 6 repeatedly claims the insulating gasket according to how it is "positioned," "extending," or "mounted" relative to the preamble's ceiling track, which demonstrates that the preamble is essential to understanding the claimed insulating gasket. Ex. 20, ¶¶27-28.

(c) STI relied on the preamble twenty-three times to distinguish prior art during prosecution

Contrary to STI's argument in this Court (*supra* at 119), during prosecution STI relied on the preamble ***twenty-three*** (23) times in an attempt to distinguish prior art. For example, STI attempted to distinguish U.S. Patent No. 5,755,066 by arguing: "The specification and claims of the above-identified reference **do not show** the combination ***claimed*** in the present invention which includes a construction for an adjustable head-of-wall insulating assembly for sealing the head-of-wall area between a ceiling thereabove and a wall configuration therebelow which is wider than standard and which includes a ceiling track . . . ." Ex. 7 at 67-68.[20] Thus, STI expressly argued that the preamble's "wall configuration therebelow

[20] Hilti has annotated the file histories of the '232 patent (Ex. 7) and '868 patent (Ex. 13) with page numbers, centered in the bottom of the page, and cites to these page numbers herein.

which is wider than standard and which includes a ceiling track" was ***claimed***. STI then repeated this argument—verbatim—ten times in the file history, which demonstrates clear reliance on the preamble during prosecution. *Id.* at 74, 86, 92, 97-98, 104-105, 111, 117, 132-133, 139, 146.[21]

STI then relied on the preamble another ***twenty-five*** times, invoking a similar argument that the "present invention" included the preamble. Specifically, STI attempted to distinguish U.S. Patent No. 5,010,702, arguing: "On the other hand, the ***present invention*** shows an adjustable head-of-wall insulating construction sealing a head-of-wall area between ceiling thereabove and a wall configuration therebelow which is wider than standard and which includes a ceiling track of conventional configuration." Ex. 7 at 64. STI then repeated this argument—verbatim— ***a dozen*** times.[22] *Id*. at 71, 79, 82-83, 89, 95, 102, 109, 115-116, 122, 129, 135-136, 142. Because STI relied on the preamble ***twenty-three*** times in an attempt to distinguish prior art, the preamble is limiting. Ex. 20, ¶¶29-31.

(d) the specification repeatedly underscores the importance of the "wider than standard" wall configuration

[21] Despite testifying that he reviewed the file history and understood it (Ex. 5, ¶2), Jones was unable to answer questions concerning this argument STI made twenty-three times during prosecution. Ex. 6 at 62:10-66:7.

[22] Jones was also unable to answer questions concerning this pervasive argument. Ex. 6 at 66:22-67:16.

The entire purpose of the alleged invention of the '232 patent is to provide an insulating gasket that can be used to seal the area between a ceiling and a wider than standard wall configuration. Ex. 20, ¶¶20-22, 32. Indeed, the '232 patent's title is "Adjustable Head-of-Wall Insulation Construction for Use with Wider Wall Configurations." *See Rotatable Techs. LLC v. Motorola Mobility LLC*, 567 F. App'x. 941, 943 (Fed. Cir. 2014) (preamble was limiting where, *inter alia*, it is referenced in the patent's title). The specification then repeatedly identifies the insulating gasket's usability with wider wall configurations as key to the alleged invention. For example, the '232 patent explains that "[t]he present invention discloses a ***unique*** configuration for an insulating gasket 24 . . . ***designed for use with any larger than conventional building wall configuration*** 11 . . ." '232 patent at 6:11-23;[23] *see also* 1:45-49, 10:29-42, 11:41-43. Because the preamble is the only reference in claim 6 to the alleged inventive concept of sealing a "wider than standard" wall configuration, the Court should construe the preamble as limiting. *Proveris Sci. Corp. v. Innovasystems, Inc.*, 739 F.3d 1367, 1373 (Fed. Cir. 2014).

ii. The term "wider than standard" renders claim 1 indefinite.

(a) "wider than standard" is an indefinite term of degree

[23] Despite not understanding what differentiates claim 6 from the prior art, Jones admitted during his deposition that the foregoing passage "has some importance." Ex. 6 at 55:22-58:23, 58:25-60:7.

The term "wider than standard" is a term of degree because it requires a comparison against wall configurations of "standard" widths. "If a claim employs a term of degree, the intrinsic record must provide those skilled in the art with 'objective boundaries' with which to assess the term's scope." *In re Walter*, 698 F. App'x 1022, 1026 (Fed. Cir. 2017) (citing *Interval Licensing LLC v. AOL, Inc.*, 766 F.3d 1364, 1371 (Fed. Cir 2014)). "If it does not, the claim is indefinite." *Id*. Here, claim 6 is indefinite because the intrinsic record does not provide "objective boundaries" to allow a POSITA to determine whether a particular width wall configuration is a "wider than standard" wall configuration. Indeed, there is no single "standard" width "wall configuration" against which to determine whether a given "wall configuration" is "wider than standard."

Turning to the claim language, claim 6 tells a POSITA only that the "wider than standard"[24] wall configuration includes a ceiling track. The claim does not identify whether other components are required. Nonetheless, a POSITA would understand that a wall configuration generally includes at least a ceiling track, studs supporting the ceiling track, and wall boards on either side of the wall configuration. Ex. 20, ¶34. The claim provides a POSITA with no guidance on how to determine

[24] A POSITA would understand "standard" to refer to "conventionally available" (or a similar concept such as customary, typical, etc.). Ex. 20, ¶34.

whether the wall configuration—with unspecified components—is "wider than standard." *Id*., ¶35.

The claim's lack of specificity creates an indefiniteness problem because what is a "standard" wall configuration to one POSITA may not be "standard" to another POSITA. *Id*. Indeed, years before litigation, STI published a "Technology Update" concerning a new gasket product and stated: "The so called 'typical gypsum board wall assembly' can vary greatly from the standard 3-1/2 in. wide track to the 6+ in. wide or offset dual track designs." Ex. 8 at 1. Thus, STI itself recognizes that there is no single "typical gypsum board wall assembly." Instead, what is considered "typical . . . can vary ***greatly***." As the author of the Technology Update (STI's, Justin Pine who at the time was a Product Manager) testified:

> Q. And what did you mean by the phrase "so-called"?
>
> A. The term "typical gypsum wall assemblies" are used colloquially. They can mean different things to different people depending on who you're talking to.

Ex. 9 at 63:11-16. In other words, what is "typical" (*i.e.*, conventional) is entirely subjective, "leaving the facially subjective claim language without an objective boundary." *Interval*, 766 F.3d at 1373; Ex. 20, ¶35.

To the extent claim 6 meant to require that the "ceiling track" of the claimed wall configuration is "wider than standard," that would compound the indefiniteness problem because there is no one "standard" size ceiling track to provide an objective

boundary for a "wider than standard" ceiling track. Ex. 20, ¶36. Instead, at the time of filing there were ***multipl***e ceiling tracks that would have been considered "standard." For example, ceiling track widths of 2-1/2," 3-1/2," 3-5/8," 4," 6," 8," or 10" were understood to be "standard." *Id.*; Ex. 10 at 1; Ex. 19 at 2, 3. Because there are multiple "standard" width ceiling tracks, a POSITA would have no objective way to determine whether a ceiling track is "wider than standard." Ex. 20, ¶36.

For example, a POSITA would not understand with reasonable certainty whether a 4" ceiling track is "wider than standard." *Id.*, ¶37. While 4" is wider than a "standard" 3-5/8" track, it is not wider than a "standard" 6" ceiling track. *Id.* So, is the 4" ceiling track "wider than standard" where it is wider than one "standard" size ceiling track (4") but not another "standard" size ceiling track (6")? *Id.* And if the ceiling track width is 7" inches, is it "wider than standard" where it is wider than some "standard" ceiling track widths (e.g., 3-5/8" and 6") but not others (e.g., 8" and 10")? *Id.* There is no information in the claim to answer these questions. *Id.* Instead, the "standard" starting point is entirely subjective. *Id.*

Importantly, during his deposition, Dr. Jones could not identify a single "dimension" for a "wider than standard" wall. Ex. 6 at 25:1-4. Instead, he took the position that "people who are in this trade, in this business, know what a standard

wall is, and if it's not standard it's wider than standard." *Id*. at 26:20-27:5. This circular definition does not provide an objective boundary for "wider than standard."

Similarly, Jones was asked:

Q. And do you think [somebody that puts up ceiling tracks on a daily basis or designs them] would know what a wider-than-standard ceiling track is?

A. Definitely.

Q. What would that be?

A. I believe I've gone through that several times with you.

Q. Okay. And you just said definitely and so I'm just trying to understand what somebody who installs ceiling tracks on a daily basis would understand a wider-than-standard ceiling track to be?

A. Well, like – like I said, if somebody was in this business and they saw a wall that was wider than standard, they would know it was wider than standard.

Q. And how wide would it be?

A. I think I've already tried my best to answer that question for you and – and I don't have anything else to add.

Ex. 6 at 42:18-43:23.[25]

Later, Jones took the position that one determines whether a wall configuration is standard (*i.e.*, well-established or very familiar) when they see it. *Id*. at 74:13-75:10, 47:10-22. A "you know it when you see it" boundary on whether

[25] Objections herein are omitted for ease of review.

a wall configuration is "wider than standard" is indefinite because it depends "on the unpredictable vagaries of any one person's opinion."[26] *Interval*, 766 F.3d at 1371.

"Where, as here, we are faced with a 'purely subjective' claim phrase, we must look to the written description for guidance." *Interval*, 766 F.3d at 1372. The specification's only reference to "wider than standard" is a verbatim recitation of the claim language in the summary of the invention ('232 patent at 3:41), which tells the POSITA nothing more than the indefinite claim language itself. Ex. 20, ¶38. Nonetheless, STI argues (*supra* at 119-120) that the following portion of the specification provides a POSITA with guidance on the scope of "wider than standard": "The construction of insulating gasket 24 is designed for use with ***any larger than conventional building wall configuration*** 11 such as those walls that make use of ***enlarged sized studs*** or has [sic] a ***multiple stud construction*** such as double studded walls." '232 patent at 6:15-19. However, this portion of the specification simply highlights the indefiniteness of "wider than standard." Ex. 20, ¶¶38-42.

The specification's reference to any "larger than conventional building wall configuration" does not provide an objective boundary because as discussed *supra*,

[26] Jones's testimony is in line with the testimony of Mr. Pine who testified that determining whether a wall configuration was "common" required talking to an "interior finish contractor" and the answer would "depend[] on the market that you're in." Ex. 9 at 70:14-71:6, 89:24-90:6, 100:15-18.

there is no single size of a "conventional building wall configuration." *Id*., ¶40. The specification's reference to "enlarged sized studs" fares no better because there is no basis against which to measure "enlarged sized studs." *Id*., ¶41. In other words, enlarged relative to what? *Id*. This vague example is particularly problematic because the size of the stud will correspond to the size of the ceiling track, which leads back to the same conundrum discussed above. *Id*. If a stud is sized to correspond to a 4" "standard" ceiling track, is that stud "enlarged sized"? *Id*.

To be sure, the stud would be "enlarged" as compared to a stud that would support a 3-1/2" ceiling track, but it would be smaller than a stud that is sized to support a 6" ceiling track. *Id*. Perhaps for that reason, during his deposition, Jones was unable to provide any objective boundary for how "enlarged" a stud must be to be considered "enlarged" and could not even identify if there was a standard sized stud in the industry. Ex. 6 at 48:12-49:14.

The specification's example of "multiple stud construction, such as double studded walls" is equally subjective and vague. '232 patent at 6:19; Ex. 20, ¶42. First, STI's own document—published years before litigation was filed—demonstrates that a "dual track" (*i.e.*, double stud wall) would be considered by some to be a "typical" wall assembly. *Id*.; Ex. 8 at 1. Indeed, the experts agree that "double studded wall" configurations are quite common in the field. Ex. 20, ¶42; Ex. 6 at 55:2-9. As such, a "double studded wall" assembly cannot be considered

"wider than ***standard***" where "double studded wall" assemblies are themselves common (*i.e.*, "standard"). Moreover, there is no single width of a double stud wall. Ex. 20, ¶42. Instead, Mr. Pine testified that the width of a double stud wall "would depend on the need of the job site"—again an entirely subjective standard. Ex. 9 at 74:1-5.

While STI relies (*supra* at 119-120) on Jones to argue that "wider than standard" is definite, Jones admitted that his definiteness opinion did not consider whether a POSITA would be able to determine whether a gasket fell within the scope of claim 6:

> Q. Did you consider in forming your opinions on definiteness whether a person skilled in the art could determine how to stay outside the scope of the preamble of Claim 6?
>
> A. Out – what do you mean by outside the scope of – of that preamble of
>
> Q. Not fall within the scope of?
>
> A. I didn't – I – I didn't consider that, no. Your question was did I consider that, right?
>
> Q. Yes, sir.
>
> A. I didn't consider that, no.

Ex. 6 at 83:22-84:9. Of course, the very purpose of the definiteness requirement is to avoid "[a] zone of uncertainty which enterprise and experimentation may enter only at the risk of infringement claims." *Nautilus,* 572 U.S. at 909-10. Had Jones

considered the proper inquiry, he may well have reached the conclusion reached by Dr. Sturges that the term "wider than standard" is indefinite. Ex. 20, ¶¶33-43.

(b) Claim 6 is indefinite because it depends on the actions of the user.

As discussed, *supra* at II.B.1.b.i.(b), claim 6 requires that the gasket be, *e.g.*, "positioned" on the ceiling track. When Hilti sells its accused gaskets, the gaskets are not "positioned" on or above a ceiling track. Instead, that is an action taken by the user. This creates another indefiniteness problem because Hilti does not know how the user will position the gasket. Rather, the question of infringement depends entirely on the actions of the user, rendering claim 6 indefinite. *See In re Katz Interactive Call Processing Patent Litig.*, 639 F.3d at 1318 (finding claims indefinite where they "create confusion as to when direct infringement occurs because they are directed both to systems and to actions performed by 'individual callers.'").

iii. If claim 6 is not indefinite, the Court should adopt Hilti's proposed construction.

Hilti's alternative construction appropriately accounts for the word "adjustable," by requiring that the gasket be adjustably variable in lateral dimensions. Ex. 20, ¶34, n. 4. A POSITA would understand this to represent the plain meaning of "adjustable" because the gasket is positioned laterally across the main track section. Any other type of adjustment does not make sense in the context of the claim language. *See* Ex. 6 at 90:18-91:5. On the other hand, STI's proposed

construction fails to account for the term "adjustable." Second, Hilti's construction provides a reasonable definition of the word "standard" by equating standard with "conventionally available." Ex. 20, ¶34.

c. STI's Reply Position

i. The preamble is not limiting.

(a) Antecedent basis

Hilti ignores STI's Opening Position argument that any antecedent basis provided by the preamble is not for a positively recited structural element of the claimed invention (a gasket); rather, the preamble describes the ceiling track, which is merely part of the environment in which to use the invention. *Supra* at 118-119.

Hilti attacks Dr. Jones in footnote 19 of its Answering Position for allegedly not understanding the legal concept of antecedent basis. However, Dr. Jones is not (nor does he purport to be) a patent law expert. In the instance cited by Hilti, Dr. Jones simply confused legal terms, but it does not follow that he does not understand the underlying concepts.

(b) The preamble is not essential to understanding the body of the claim.

Hilti argues that the preamble's recitation of ceiling track components is *essential* to understanding the body of the claim. However, Hilti ignores that these terms merely describe the intended use of the invention and the environment in which it is intended to be used; they do not constitute any part of its structure. A

POSITA can understand the structure of the claimed invention without referencing the preamble. *See* Ex. 5, ¶7.

(c) Distinguishing based on preamble during prosecution.

Hilti's reliance on the Applicant's statements during prosecution takes those statements out of context and mischaracterizes them. The statements were appended to an Information Disclosure Statement ("IDS") filed by the Applicant citing prior art to the USPTO. In addition to citing the references, the Applicant elected to (as was formerly common practice) briefly describe each reference and generally state that they do not teach the collective elements of the claims. Here, Hilti twists these statements, asserting that the Applicant was clearly distinguishing the references from the preamble. In fact, the Applicant was merely repeating the words of the entire claim to broadly state that the reference did not generally disclose the claim; it did not rely specifically on the preamble to make any distinction. For example, in the IDS cited by Hilti, the limited portions that Hilti self-servingly quoted are highlighted in yellow and the remainder of the Applicant's statements, which Hilti omitted, are highlighted in blue. *See* Exhibit 21 (highlighted excerpt of IDS).

In sum, STI's so-called repeated distinctions were merely a parroting of various words in the claim appended to an IDS. It was not an affirmative statement, for example, in response to an Office Action, that a reference does not disclose a certain element recited in the preamble. Relying on the preamble to distinguish it

from prior art is entirely different from making broad statements generically listing all the words in the claim. *See Intirtool, Ltd. v. Texar Corp*, 369 F.3d 1289, 1295-96 (Fed. Cir. 2004) ("Either of the statements from the prosecution history that Texar cites could be interpreted as relying not on the [] language of the preamble, but rather on the specific structural limitations set forth in the body of claim 1. . . . For example, Intirtool's description of its invention [] is followed immediately by a recitation of the structural limitations set forth in the independent claim. . . . We hold that the preamble is not a limitation of claim 1.").

(d) The specification does not underscore the preamble as important.

Hilti argues that the inventive concept is sealing a "wider than standard" wall, but then inexplicably and inconsistently also argues that it cannot articulate what this means. Hilti states that the scope of "wider than standard" cannot be determined because it appears only once in the specification, but here argues that this is the "entire purpose of the alleged invention" and that the specification "repeatedly identifies" this concept. Hilti's inconsistent positions reveal that its arguments are driven by its litigation positions, not logic or facts.

Finally, contrary to Hilti's arguments, although the patent's title is part of the intrinsic record, it is not a claim limitation. *See Pitney Bowes, Inc. v. Hewlett-Packard Co.*, 182 F.3d 1298, 1312 (Fed. Cir. 1999) ("[W]e certainly will not read limitations into the claims from the patent title.").

ii. Wider than standard.

As explained above, the preamble is not limiting, so the Court need not address this point. However, even if portions of the preamble are found limiting, a POSITA would understand what "wider than standard" means in the context of claim 6. For example, Hilti's own documents are replete with references to "standard" sizes for ceiling tracks. Ex. 22 (1248HILTI0027528-1248HILTI0027539) (questionnaire asking about "price point of a non-firestopped standard solid track ceiling runner"); Ex. 23 (1248HILTI0035199-1248HILTI0035200) ("There are different configurations and sizes for standard drywall track. We need to ask the customers what are the most common sizes and gauges to ensure compatibility with our new product solution."); Ex. 24 (1248HILTI0069246) (spreadsheet indicating "standard widths" for BlazeFrame and Cemco tracks, and tab for "standard tracks" listing various sizes of ceiling track).

Indeed, Hilti has even referred to a "standard" head of wall track as having multiple sizes:

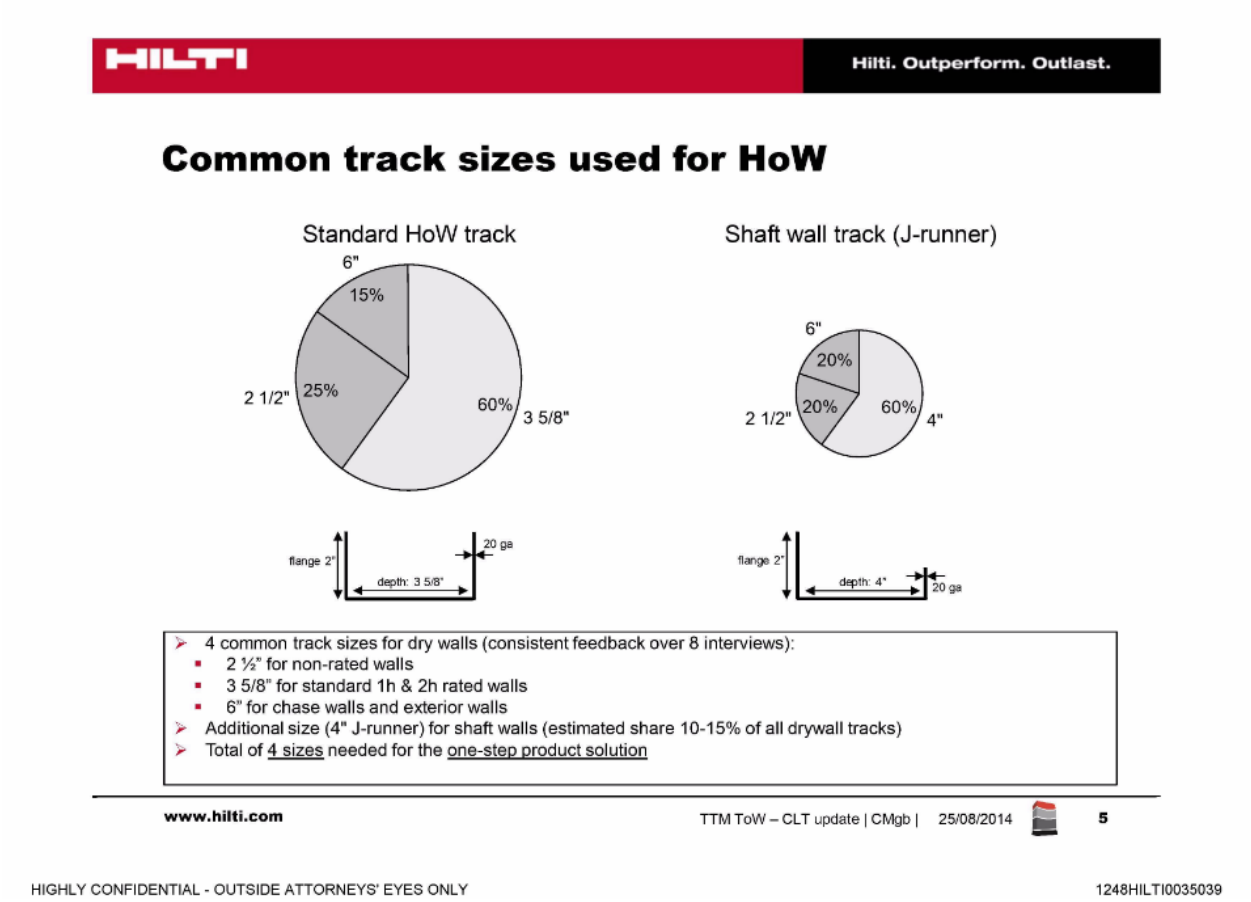

Ex. 25 (1248HILTI0035035-1248HILTI0035055). Accordingly, Hilti understands the dimensions of a "standard" ceiling track given the context.

Hilti's Answering Position takes the deposition testimony of Justin Pine and Dr. Jones out of context. First, as to Mr. Pine (an STI employee - fact witness), Hilti equates the phrase "typical gypsum board wall assembly" with the claim language "wider than standard." But the claim language does not include the phrase "typical gypsum board wall assembly" (or the word "conventional" that Hilti later references). Additionally, based on Mr. Pine's testimony, Hilti conclusorily asserts that the definition of a "typical" wall assembly "is entirely subjective." *Supra* at

128-129. In drawing this incorrect conclusion, Hilti cites one isolated exchange from Mr. Pine's deposition and ignores the greater context of the other approximately 16 pages of deposition testimony related to "common" track sizes. Ex. 9 (Pine Transcript, 62:17-78:20). The greater context of his testimony makes clear that a "standard" width depends on the context of the wall, which a POSITA would understand. *See* Ex. 5, ¶10 ("[A] POSITA would understand that a 'standard' wall is a single studded wall of a particular size.").

Hilti further argues that because multiple sizes of ceiling tracks were commercially available at the time of the patent, a POSITA could not determine a single standard width. To the contrary, and Dr. Jones explained in his deposition and declaration, a POSITA would understand based on the context of the wall when a certain size ceiling track width is standard. *See id.* The existence of multiple ceiling track widths does not prevent a POSITA from determining whether a certain track used in a particular application is wider than standard.

Hilti further argues that "wider than standard" is indefinite because it cannot be limited to one particular size. However, Hilti's argument misses the point because the phrase is at most an indication that the claimed gasket can be adjusted for use on "wider than standard" walls as well as standard width walls. The claimed gasket is not limited to being used on "wider than standard" walls; it can be, but is not required to be, used in that context.

iii. Claim 6 is not indefinite for depending on the actions of the user.

Claim 6 does not depend on the actions of a user and Hilti's reliance on *In re Katz Interactive Call Processing Patent Litig.* is misplaced. In *Katz*, the Federal Circuit held that claims were invalid for claiming both an apparatus and a method of use. Such a mixed claim type is not present here. The *Katz* claims required "interface means for providing automated voice messages ... to certain of said individual callers, wherein said certain of said individual callers digitally enter data." In other words, the *Katz* claims were directed to a system, but also actively required that an individual enter data. By contrast, the '232 patent claims are directed to a gasket. STI maintains that installation is not required for a gasket to infringe the claims. However, even if the claims are interpreted to require the gasket to be installed to establish infringement, it is still clear when an installed gasket infringes—the claim does not require a specific activity or active method steps by a user. The claim is agnostic as to how a gasket becomes installed. Accordingly, there is no confusion as to when direct infringement occurs and the reasoning from *Katz* does not apply.

iv. The Court should reject Hilti's construction.

As described in STI's Opening Position, Hilti's construction attempts to improperly rewrite the claims and should be rejected. It improperly imports limitations from the specification for the terms "adjustable" and "wider than

standard." These terms do not require further elaboration. For example, a POSITA and a juror would readily understand the commonplace word "adjustable."

d. Hilti's Sur-Reply Position

i. The preamble is limiting.

STI cannot escape the fact that its lengthy preamble provides antecedent basis for ***every single limitation*** of claim 6 as well as claim 8. *Supra* at 122-123. Accordingly, STI is left to create (*supra* at 135) a legally unsupported artifice claiming that the ceiling track is not "a positively recited structural element of the claimed invention." But STI's argument is inconsistent with the claim language which positively recites a gasket "positioned immediately above" and "extending across" the ceiling track that is part of the "wider than standard" wall configuration. In other words, the ceiling track is part of the claimed structure. And that ceiling track is first recited in the preamble.

STI also accuses (*supra* at 135) Hilti of taking ***twenty-four***[27] separate instances where STI distinguished prior art "out of context." But there is no missing context: STI argued that the "***claimed*** invention" and "present invention" included the preamble and further argued that the prior art did not disclose the limitations of the preamble. STI attempts revisionist history (*supra* at 136) by arguing that it "was

[27] Hilti mistakenly identified STI as having relied on the preamble twenty-three times. As Hilti's citation shows, STI relied on the preamble twenty-four times. *See supra* at 124-125 (citing twenty-four arguments).

merely repeating the words of the entire claim to broadly state that the reference did not generally disclose the claim." But the file history shows that STI made specific limitation-by-limitation arguments, including twenty-four such arguments distinguishing prior art because it did not disclose the "claimed" preamble.

STI has no real argument against the fact that the specification underscores the importance of a "wider than standard" wall configuration to the disclosed invention. *Supra* at 126. Consequently, STI resorts to accusing Hilti of inconsistent positions because Hilti argues that "wider than standard" is indefinite while also arguing that the specification underscores its importance. But there is no inconsistency. The fact that "wider than standard" is indefinite does not change the specification's repeated underscoring of the importance of the indefinite concept to the invention. STI also argues (*supra* at 137) that the Title is not a claim element. While true, that does not change the fact that the very title of the '232 patent highlights the importance of "wider than standard."

ii. STI fails to rebut Hilti's clear and convincing evidence of indefiniteness.

STI's Reply arguments fail to engage with Hilti's argument and simply serve to highlight the indefiniteness of "wider than standard." Hilti's Brief separately addressed (*supra* 127-129) "a wall configuration, which is wider than standard" before addressing the ceiling track. STI does not address this argument at all, leaving it unrebutted.

Turning to the ceiling track, STI (*supra* at 138) refers to confidential Hilti documents to argue that "Hilti has even referred to a 'standard' head of wall track as having multiple sizes." But that proves Hilti's point: the term "wider than standard" is indefinite because a POSITA understands there are multiple "standard" widths. Accordingly, a POSITA is left to question whether a ceiling track is "wider than standard" where it is both wider than a standard 3.5-inch ceiling track but not wider than a standard 6-inch ceiling track and so on. Indeed, STI did not address these exact questions posed by Hilti (*supra* at 128-130). STI's silence speaks volumes.

STI again proves Hilti's point where it argues (*supra* at 140) that Pine's deposition testimony "makes clear that a 'standard' width depends on the context of the wall." But that "context" is entirely subjective and depends on numerous job conditions that are not objectively known to a POSITA. Moreover, while STI baselessly accuses (*supra* at 139-140) Hilti's block quotes of taking Pine's testimony concerning "common" wall configurations out of context, Pine clearly testified that "[t]erms like typical and common are up to the interpretation of the reader." Ex. 9, 78:18-19. The same is true with respect to "standard."

STI also argues (*supra* at 140) that Jones explained that "a POSITA would understand based on the context of the wall when a certain size ceiling track width is standard." This again proves Hilti's point: a "you know it when you see it" standard does not provide a POSITA with an objective boundary for determining

whether a wall configuration is wider than standard. And again, Jones could not identify a single width size that would have been considered "standard." *Supra* at 129-131.

STI (*supra* at 140) also points to Jones' declaration in which he testified that "a POSITA would understand that a 'standard' wall is a single studded wall of a particular size." Once again, this proves Hilti's point: pegging "wider than standard" to a "single studded wall of a ***particular*** size" does not provide an objective boundary. Indeed, any wall that has ever existed had a "particular size." Moreover, STI highlights that even it cannot determine what is "wider than standard." Specifically, STI argues that "wider than standard" means: "a wall that can be used with a ceiling track that makes use of enlarged sized studs ***or*** has multiple stud construction such as double studded walls." A "single studded wall of a particular size" could include "enlarged sized studs," making it both wider than standard and not wider than standard at the same time, according to STI's own arguments. STI's inability to figure out whether a wall configuration is "wider than standard" demonstrates its indefiniteness.

Beyond the foregoing, STI fails to address many of Hilti's points raised in its Answering Brief. For example, STI does not identify an objective baseline for determining whether a stud is an "enlarged sized" stud. *See supra* at 131-132. STI also fails to address Hilti's point that double studded walls would be considered

standard by some POSITAs and not standard by other POSITAs. *Supra* at 132-133. Indeed, STI barely cross-examined Sturges on his reasoned multi-page opinion leaving that evidence largely uncontroverted. Ex. 20, ¶¶33-43

Similarly, STI did not address the fact that its expert did not consider the key question of how a POSITA would determine how to stay outside the scope of claim 6 in offering his definiteness opinion. *Supra* at 133-134. Nor did STI offer any additional testimony from a POSITA to engage with Hilti's evidence and arguments. On the present record, Hilti's reasoned and uncontroverted expert opinion cannot be overcome by STI's attorney argument, which simply serves to highlight the indefiniteness of "wider than standard." The Court should find "wider than standard" indefinite.

iii. Claim 6 is indefinite because infringement depends on the user.

STI argues (*supra* at 140) that if the claims require the gasket to be installed on the ceiling track to infringe, it is clear when the gasket infringes. Hilti agrees. However, if STI maintains its position that the gasket does not need to be installed to infringe, then the claim is indefinite.

iv. If not indefinite, the Court should adopt Hilti's construction.

STI asks the Court (*supra* at 141-142) to reject Hilti's construction because "a POSITA and a juror would readily understand the commonplace word

'adjustable," but tellingly fails to offer a plain meaning construction of the term in the context of the intrinsic record. The Court should adopt Hilti's construction if the claim is not indefinite.

2. "at least one connecting strap positioned above the main track section of the ceiling track" (claim 6)

STI	Hilti
Plain meaning – no construction necessary.	"at least one connecting strap, ***which is removably detachable from the L shaped gasket sections and selected from connecting straps of various different lengths***, positioned above the main track section of the ceiling track" (emphasis added by STI).

a. STI's Opening Position

This phrase does not need construction; plain and ordinary meaning suffices. The words in this phrase are in common parlance, and their meanings are clear. There are no technical terms of art, or words that the inventors ascribed a special meaning, in this phrase. Thus, no construction is necessary.[28] *See* Jones Decl. (Ex.

[28] *See, e.g.*, *Azurity Pharms., Inc. v. Alkem Labs. Ltd.*, 2023 WL 3254117, *14 (D. Del. May 4, 2023) ("When judges say that a term 'require[s] no construction,' they mean that further elaboration is unnecessary because the term is 'common parlance' and its meaning is 'clear.'"), citing *Summit 6, LLC v. Samsung Elecs. Co.*, 802 F.3d 1283, 1291 (Fed. Cir. 2015) and *Schumer v. Lab. Comput. Sys., Inc.*, 308 F.3d 1304, 1312 (Fed. Cir. 2002) ("These are not technical terms or art, and do not require elaborate interpretation."); *Chef Am., Inc. v. Lamb-Weston, Inc.*, 358 F.3d 1371, 1373-74 (Fed. Cir. 2004) ("These are ordinary, simple English words whose meaning is clear and unquestionable."); *Phillips v. AWH Corp.*, 415 F.3d 1303, 1314

5) ¶15-16.

The Court should reject Hilti's proposed construction. Hilti makes no effort to actually define any words in this phrase. Instead, Hilti's construction merely repeats the claim language verbatim—thus supporting STI's position that no construction is necessary—and then improperly injects an extraneous limitation into the phrase: "which is removably detachable from the L shaped gasket sections and selected from connecting straps of various different lengths." Hilti's attempt to rewrite the claim, adding new limitations for litigation-driven reasons—i.e., to unduly limit the scope of the claim to avoid infringement—is improper. *Supra* at 120, n.16.

Hilti's added language modifies this element in two ways. First, Hilti's construction requires a connecting strap "which is removably detachable." The specification does not use the phrase "removably detachable" or anything similar when describing the connecting strap. A POSITA would not read the claim to include a requirement that the connecting strap be "removably detachable." Jones Decl. (Ex. 5) ¶15-16.

(Fed. Cir. 2005) ("ordinary meaning of claim language as understood by a person of skill in the art may be readily apparent even to lay judges, and claim construction in such cases involves little more than the application of the widely accepted meaning of commonly understood words.").

Second, Hilti improperly imports other limitations from the specification and improperly limits the claim to one embodiment.[29] Specifically, Hilti attempts to limit the connecting strap to being "selected from connecting straps of various different lengths." While the specification describes "[i]ndividual connecting straps [that] can be of various predetermined lengths," this is just one specific described embodiment; claim 6 is not limited to this embodiment. '232 Patent (Ex. 1), 11:23-24; Jones Decl. (Ex. 5) ¶15-16.

Claim 6 requires at least one "connecting strap." Hilti's construction would further rewrite the claim to require *multiple* connecting straps because it requires "connecting straps of various different lengths." The Court should reject Hilti's invitation to rewrite claim 6 in this manner. *Supra* at 120, n.16.

b. Hilti's Answering Position

[29] *Liebel–Flarsheim Co. v. Medrad, Inc.*, 358 F.3d 898, 913 (Fed. Cir. 2004) ("[I]t is improper to read limitations from a preferred embodiment described in the specification—even if it is the only embodiment—into the claims absent a clear indication in the intrinsic record that the patentee intended the claims to be so limited."); *Resonate*, 338 F.3d at 1364–65 ("For example, a particular embodiment appearing in the written description may not be read into a claim when the claim language is broader than the embodiment."); *SciMed Life Sys., Inc. v. Advanced Cardiovascular Sys., Inc.*, 242 F.3d 1337, 1340 (Fed. Cir. 2001) ("[O]ne of the cardinal sins of patent law [is] reading a limitation from the written description into the claims.").

To narrow issues for the Court, Hilti adopts STI's plain and ordinary meaning construction for the first half of this limitation addressed in STI's Opening Brief Position, *supra* at 147.

3. "and attached to said first L-shaped gasket section and to said second L-shaped gasket section to limit spatial separation therebetween" (claim 6)

STI	Hilti
Plain meaning – no construction necessary.	This term should be construed according to its plain meaning, as informed by the intrinsic record, which is "and attached to said first L-shaped gasket section and to said second L-shaped gasket section to limit spatial separation therebetween ***when the gasket is positioned on the track***." (emphasis added by STI).

a. STI's Opening Position

This phrase does not need construction; plain and ordinary meaning suffices. *Supra* at 147-148, n.28.

The Court should reject Hilti's proposed construction. Hilti makes no effort to actually define any words in the claim. Hilti's construction merely repeats claim language verbatim, further supporting STI's position that no construction is necessary. Instead of defining the phrase to clarify the claim language, Hilti improperly adds an extraneous limitation: "when the gasket is positioned on the track."

Hilti's added language would modify the connecting strap by requiring it to be able to "limit spatial separation . . ." when the gasket is installed on the track. However, this is simply not an element of the claim; instead, Hilti improperly imports this limitation from the specification into the claims. *See* '232 Patent (Ex. 1), 11:16-20; *supra* at 150, n.30; Jones Decl. (Ex. 5) ¶17.

b. Hilti's Answering Position

Claim 6 recites "at least one connecting strap ***positioned*** above the main track section of the ceiling track ***and*** attached" to two L-shaped gasket sections to limit spatial separation therebetween. Thus, the claim requires two things: 1) the connecting strap must be positioned above the main track section and 2) the connecting strap must be attached to two L-shaped gasket sections to limit spatial separation between the L-shaped gasket sections. The sole dispute remaining between the parties is whether the plain language of the claim requires the "connecting strap" to be attached to the L-shaped gasket sections to limit spatial separation therebetween when the gasket is positioned on the track.[30] Hilti's position is that it does while STI argues that the "connecting strap" need not limit spatial separation when the gasket is positioned on the ceiling track.

[30] To narrow issues for the Court, Hilti adopts STI's plain meaning construction for the first half of this limitation addressed in STI's Opening Position at 147.

A POSITA would understand claim 6's recitation of "at least one connecting strap positioned above the main track section" to refer to the gasket when it is installed on the main track section. Ex. 20, ¶¶44-46. The claim is not directed to simply holding a gasket in position above the ceiling track. Instead, it recites a gasket "positioned above" (i.e., installed on) the ceiling track. *Id*. This is clear from the context of the claim as a whole. *Id*.

For example, the gasket upper panels are "positioned ***immediately*** above the main track section" while the gasket side panels are claimed as "extending . . . across" the side track sections. '232 patent at 13:30-31, 35-37, 45-46, 51-53. Because the upper panels are positioned "***immediately*** above" the main track section, a POSITA would understand that the gasket is ***on*** the ceiling track. Ex. 20, ¶45. This positioning allows the side panels to "extend[] across" the track side section as claimed.[31] *Id*. Claim 6 further recites that the claimed adhesive is mounted on the gasket upper panels "***between***" the upper panels and "the main track section of the ceiling track." '232 patent at 13:63-14:5. A POSITA would understand this to reinforce the fact that the claim is directed to a gasket installed on a ceiling track. Ex. 20, ¶45.

[31] Despite this clear claim language, Jones was unable to say whether a gasket, sitting in a box, would have a side panel "extending across" the side track section. Ex. 6. at 101:3-102:24.

Consistent with the rest of the claim, the "connecting strap" is also "positioned above" the ceiling track. '232 patent at 14:6-7. Here again, a POSITA would understand this claim language to refer to the connecting strap when it is positioned ***on*** the ceiling track. Ex. 20, ¶46. The claim further requires that the connecting strap is positioned to limit the spatial separation of the L-shaped gasket sections to which the strap is attached. *Id*. In other words, the strap must limit spatial separation when it is positioned above the gasket. *Id*.

STI fights the clear implication of the claim language because the component it has identified as the "connecting strap" on Hilti's accused TTS-OS product does not limit spatial separation when the accused gasket is positioned above the ceiling track. To illustrate the parties' dispute, the below image is from STI's infringement contentions.

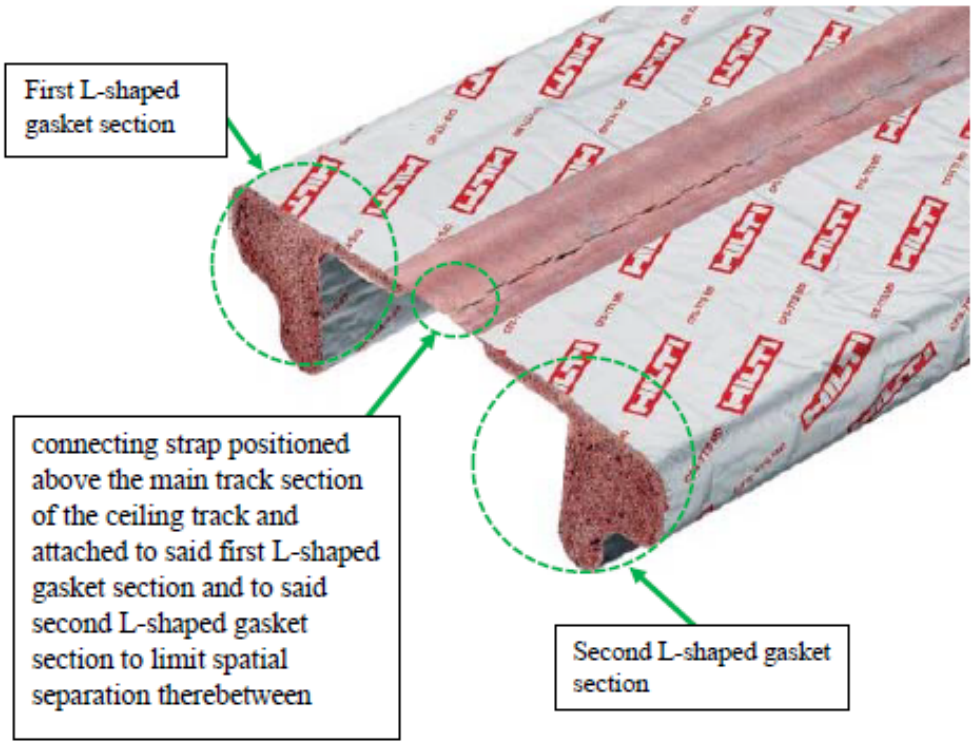

Ex. 11 at 16.

As shown, STI identifies the middle portion of the gasket's upper section as the "connecting strap." In this Accused Device, the two L-shaped gaskets can be separated and then installed on a ceiling track. *See* Ex. 12 at 1. When such installation occurs, the alleged connecting strap is separated such that it does not limit spatial separation between the two L-shaped gasket sections (*i.e.*, it does not connect the two L-shaped gasket sections). This can be seen with reference to the Hilti Instructions for Use shown below.

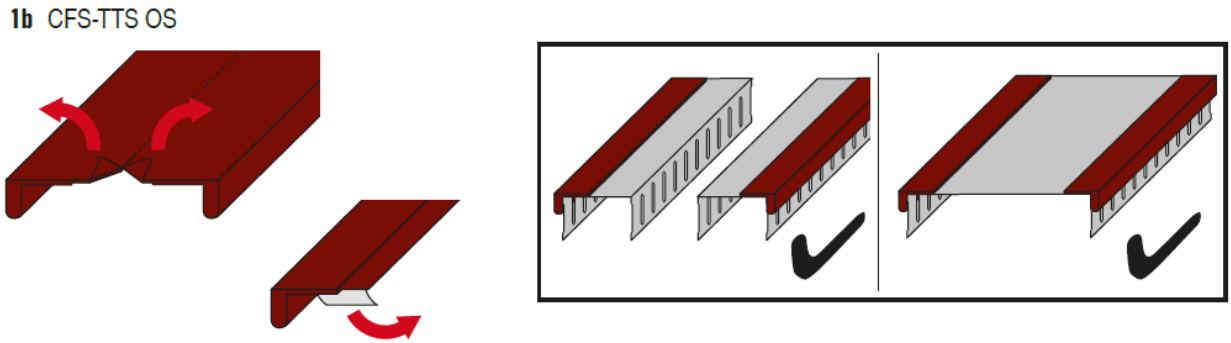

Ex. 12 at 1.

Accordingly, STI seeks a construction that would, contrary to the claim language, allow for the connecting strap to *not* limit spatial separation when it is positioned on the ceiling track. The Court should reject STI's strained construction as inconsistent with plain claim language.

c. STI's Reply Position

Hilti argues that this claim phrase requires that the gasket be installed on the ceiling track and that connecting strap must "limit spatial separation therebetween when the gasket is positioned on the track." *Supra* at 151-152. Hilti argues that this is clear from the context of the claim as a whole, but then heavily cites to examples from the specification. Even if Hilti is correct that the claim requires an installed gasket – something STI disputes – it does not follow that the connecting strap ***must*** limit spatial separation when the gasket is installed. Neither the claims nor specification explicitly require the connecting strap to limit separation when installed. Indeed, the connecting strap may, for example, merely limit separation in an uninstalled state.

Much of Hilti's Answering Position focuses on premature infringement arguments that are not relevant at this stage. In any event, as STI will show at the appropriate time, certain of Hilti's accused products (e.g., the CFS-TTS OS) practice this claim element. The Court should reject Hilti's attempt to avoid infringement by improperly adding an additional phrase to the claim. STI maintains that this straightforward phrase in the claim does not require construction.

d. Hilti's Sur-Reply Position

STI does not offer an interpretation of the claims under which the claims recite anything other than an installed gasket. Instead, STI simply states (*supra* at 155) that it "disputes" Hilti's position. In the absence of an actual position from STI, the Court should adopt Hilti's construction.[32]

Having all but conceded Hilti's point, STI then argues (*id.*) that even if Hilti is correct, "it does not follow that the connecting strap ***must*** limit spatial separation when the gasket is installed." But the claim language is clear that the "connecting strap" is "positioned above the main track section of the ceiling track and attached to said first L-shaped gasket section and to said second L-shaped gasket section to limit spatial separation therebetween." '232 patent at 14:6-9. Contrary to STI's

[32] STI incorrectly argues (*supra* at 155-156) that Hilti supported its claim-language-based arguments by "heavily cit[ing] to examples from the specification." But the citations—while in column and line format—are all to the claims. *Supra* at 152-153.

argument, this claim is not met when the connecting strap limits separation in an uninstalled state (*i.e.*, when it is not "positioned")—nor does STI make any effort at all to explain its position.

4. "spatially disposed" (claim 8)

STI	Hilti
Not indefinite. Plain meaning – no construction necessary. Alternatively, "relative to a position."	Indefinite. If not indefinite, this term should be construed according to its plain meaning, as informed by the intrinsic record, which is "spatially disposed from the entirety of the first and second side track sections."

a. STI's Opening Position

The term "spatially disposed" appears in claims 6 and 8 of the '232 patent as follows: (1) claim 6 - "a second side track section extend downwardly therefrom at a position ***spatially disposed*** from the first track section"; (2) claim 6 - "a second gasket upper panel of insulating material positioned immediately above the main track section of the ceiling track and extending generally horizontally thereover at a position ***spatially disposed*** from said first gasket upper panel"; (3) claim 8 - "wherein said first gasket side panel is ***spatially disposed*** from the first track side section to be moveable with respect thereto responsive to relative movement between the wall configuration and the upper building structure thereabove and wherein said second

gasket side panel is ***spatially disposed*** from the second track side section."

This term is not indefinite; a POSITA reviewing the claims would be able to assess their scope. Jones Decl. (Ex. 5) ¶18-20.

Further, "spatially disposed" does not need construction because a jury would readily understand it. Plain and ordinary meaning suffices, and the phrase does not need to be rewritten or replaced with synonyms. *See U.S. Surgical Corp. v. Ethicon*, 103 F.3d 1554, 1568 (Fed. Cir. 1997) (explaining that "Markman decisions do not hold that the trial judge must repeat or restate every claim term. . . . Claim construction is a matter of resolution of disputed meanings and technical scope, to clarify and when necessary to explain what the patentee covered by the claims. . . . It is not an obligatory exercise in redundancy."). The words "spatially disposed" are clear and unambiguous. *See* Jones Decl. (Ex. 5) ¶18-20.

Alternatively, if the Court decides to construe "spatially disposed," it should adopt STI's alternative construction of "relative to a position." While the specification does not define this phrase, the way the term is used is instructive. For example, the specification describes FIG. 1A as showing the gasket upper panels "spatially disposed apart." '232 Patent (Ex. 1), 5:32-35, 7:31-34. FIG. 1A displays gasket upper panels (illustrated as flat rectangles) in relative positions to one another:

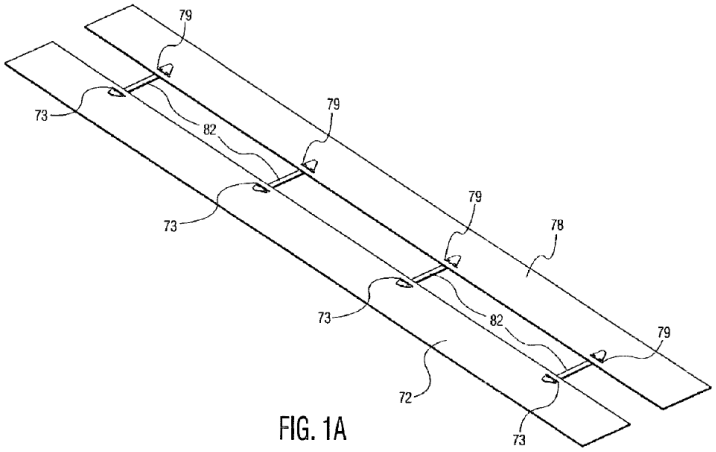

FIG. 1A

’232 Patent (Ex. 1), FIG. 1A. Thus, STI’s construction is consistent with the specification. *See* Jones Decl. (Ex. 5) ¶18-19.

Furthermore, STI’s construction is supported by dictionary definitions of “spatial” and “dispose(d).” “Spatial” means “relating to space”; “dispose” means “arrange in a particular position.” Ex. 3 (Oxford English Dictionary, 7th Ed. 2012 (“OED”)), at 205 and 698. Thus, when something is “spatially disposed,” it is relating (or relative) to a position (in space). STI’s construction is consistent with these dictionary definitions. *See* Jones Decl. (Ex. 5) ¶20.

In sum, STI’s construction is supported by intrinsic and extrinsic evidence, is straightforward, and easily understood. *See id.* ¶18-20.

By contrast, Hilti’s construction repeats the claim term verbatim and adds additional words. Hilti makes no effort to actually define “spatially disposed” and instead circularly uses the term in its construction, and adds “from the entirety of the

first and second side track sections." This clear attempt to rewrite the claim by adding new limitations for litigation-driven reasons is an improper tactic and has been rejected for over a century. *See McCarty*, 160 U.S. at 116 ("we know of no principle of law which would authorize us to read into a claim an element which is not present, for the purpose of making out a case of novelty or infringement").

Additionally, although "spatially disposed" appears in claims 6 and 8, Hilti only proposes construing it in the context of claim 8. Notably, Hilti's construction is inconsistent with the way "spatially disposed" is used in claim 6 and would render claim 6 nonsensical. *See Wright Med. Tech.*, 122 F.3d at 1445 ("we must not interpret an independent claim in a way that is inconsistent with a claim which depends from it"). Specifically, inserting Hilti's construction in place of the words "spatially disposed" would result in the preamble reciting: "second side track section extend[s] downwardly therefrom at a position [spatially disposed from the entirety of the first and second side track sections] from the first track section . . .". *See* '232 patent (Ex. 1), claim 6, preamble. Further, part B.1 of claim 6 would recite "a second gasket upper panel . . . extending generally horizontally thereover at a position [spatially disposed from the entirety of the first and second side track sections] from said first gasket upper panel." This is an improper and nonsensical result because this portion of claim 6 does not relate to side track sections. Instead, it relates to the relative positions of the first and second gasket upper panels. *See* '232 Patent (Ex.

1), claim 6; *AIA Eng'g Ltd.*, 657 F.3d at 1276 ("We strive . . . to avoid nonsensical results in construing claim[s] . . ."); Jones Decl. (Ex. 5) ¶21.

b. Hilti's Answering Position

Claim 8 recites that the first and second gasket side panels are "spatially disposed from the [first/second] track side section[s] to be moveable with respect thereto responsive to relative movement between the wall configuration and the upper building structure thereabove." STI argues (*supra* at 157-158) that this term needs no construction or, alternatively, that it should be construed to mean "relative to a position." Hilti asserts that the claim should be construed according to its plain meaning as "spatially disposed from the entirety of the first and second side track sections."[33]

The specification explains that the gasket side panels are not affixed to the track side section, which "will allow both the first gasket side panel 71 and the second gasket side panel 77 to move freely over the outer surfaces of the downwardly extending first track side section 20 and second track side section 22 responsive to relative movement between the upper building structure 12 and the wall configuration 11." '232 patent at 8:64-9:2. According to the specification, this allows "freedom of movement to respond to relative structural movement while still

[33] To narrow issues for the Court, Hilti defers its indefiniteness argument to a later stage of the case.

maintaining the gasket side panels 71 and 77 at positions adjacent the respective track side section 20 and 22 while maintaining positioning of the gasket side panels 71 and 77 extending generally thereover to facilitate insulation thereadjacent." *Id*. at 9:6-12.

In other words, the gasket side panels are spaced from the side track sections to allow for movement of the panels relative to the side track sections. Claim 8 recites this spatial separation by reciting that the side panels are "spatially disposed" from the "track side section[s] to be moveable with respect thereto responsive to relative movement between the wall configuration and the upper building structure thereabove."

During his deposition, Jones clarified that STI's construction of "relative to a position" just means "next to." Specifically, Jones testified that, so long as two objects are not "occupying the same space, they must be spatially disposed." Ex. 6 at 118:4-6. Under this construction, two objects could be directly touching each other yet still be spatially disposed. *Id*. at 113:12-14. In offering such a construction, Jones and STI read out the concept of the side panels begin spaced (*i.e.*, spatially disposed) from the side track sections such that they can move in response to building movement.

Rather than meaning "relative to a position," (*i.e.*, next to), "spatially disposed" should be construed to require spatial separation between the gasket side

panels and the side track sections such that the side panels can move in response to building movement. Ex. 20, ¶49. In the context of the alleged invention, this spatial separation should extend for the entirety of the ceiling track. *Id*.

STI's argument (*supra* at 159-160) that the Court should construe "spatially disposed" in claim 8 consistent with the recitation of "spatially disposed" in claim 6 highlights the correctness of Hilti's position. That is, claim 6's recitation that the first gasket upper panel is "spatially disposed" from the second gasket upper panel ('232 patent at 13:45-49) means that the gasket panels are spatially separated from each other. This is the same concept Hilti seeks to capture with its construction in requiring that the gasket side panel be spatially separated from the entirety of the side track section.[34]

c. STI's Reply Position

Hilti's construction and supporting arguments are confusing and circular. Hilti correctly explains that under STI's construction, two objects can be touching and still be spatially disposed from one another. *Supra* at 162. However, Hilti incorrectly argues that STI's construction "read[s] out the concept of the side panels

[34] To the extent the Court is interested in construing "spatially disposed" generally as the term is used in claims 6 and 8, the Court could construe "spatially disposed" to mean "spatially separated from the entirety" of something, such that the phrase is used consistently.

being spaced (i.e., spatially disposed) from the side track sections such that they can move in response to building movement." *Id.* This statement is based on an unsupported and incorrect assumption that the side panels cannot "move in response to building movement" if they are touching the track side sections. To the contrary, Hilti even explains two paragraphs earlier that "the gasket side panels are not affixed to the track side section, which 'will allow both the first gasket side panel 71 and the second gasket side panel 77 to move freely over the outer surfaces of the . . . first . . . and second track side section[s] . . . responsive to relative movement between the upper building structure 12 and the wall configuration 11.'" *Supra* at 161 (quoting '232 patent at 8:64-9:2). This portion of the specification merely explains that the "side panels are not affixed to the track side section." It does not state that if the side panels are touching the track side sections, the side panels cannot move freely over the outer surfaces of the track side sections responsive to relative movement between the upper building structure and wall configuration. Hilti wrongly equates not being "affixed" to being entirely spaced apart and completely ignores that objects can touch without being "affixed."

Indeed, Hilti's expert Dr. Sturges confirmed during his deposition that the side panels can touch the track side sections without inhibiting the relative structural movement discussed in the specification:

> Q: Is it your opinion that if the gasket side panels and respective track side sections were touching, that the gasket would not allow freedom of movement to respond to relative structural movement?
>
> A: No.

Ex. 26 (Sturges Deposition, 37:1-7) (objection omitted). In other words, by answering "no," Dr. Sturges confirmed that the gasket ***can*** allow freedom of movement to respond to relative structural movement when the gasket side panels and track side sections are touching. Thus, Hilti's argument fails. This claim term simply does not require the side panels and track side sections to be spaced apart.

Further, Hilti's construction is circular because Hilti recites the claim language "spatially disposed" in the construction itself. Even Dr. Sturges recognized the circular nature of construing claims in this manner:

> Q. In general, when defining a particular word, do you think it is helpful to use the word itself in the definition of that word? For example, if you're defining the word "important," would you include the word "important" or "importantly" in the definition of "important"?

> A: While I haven't addressed that issue in my report, I would be on guard for circular reasoning, given the hypothetical you've proposed.

Id., 28:13-25 (objection omitted).

Moreover, Hilti's own alternative construction, introduced for the first time in footnote 34 of its Answering Position, tacitly admits that Hilti's original construction applies only to claim 8 and fails to account for the way "spatially disposed" is used in claim 6. Indeed, the only portions of the specification Hilti relies on for its construction of "spatially disposed" pertain to freedom of movement between the gasket side panels and track side sections; those portions of the specification specifically relate to the following language in claim 8: "responsive to relative movement between the wall configuration and the upper building structure thereabove." Dr. Sturges confirmed this during his deposition. *See id.* 33:13 - 35:20; 36:17-25. Thus, Hilti's original and alternative constructions are not supported by any intrinsic or extrinsic evidence that make sense in the context of claim 6 (as opposed to claim 8). Therefore, Hilti's overly narrow construction cannot be correct and should be rejected.

d. Hilti's Sur-Reply Position

In order to not read the word "spatially" out of the claim, the Court should construe the term to require spatial separation.

5. "insulating material which includes an acoustical insulating component therewithin" (claim 11)

STI	Hilti
Plain meaning – no construction necessary. Alternatively, "material with insulating properties that includes the ability to reduce the transmission of sound."	This term should be construed according to its plain meaning, as informed by the intrinsic record, which is "a material that is specifically adapted to provide acoustical insulating properties."

a. STI's Opening Position

This phrase does not need construction; plain and ordinary meaning suffices. *Supra* at 147-148, n.28.

Alternatively, if the Court decides to construe this phrase, it should adopt STI's alternative construction. STI's construction is consistent with the specification, which explains that insulating materials can include materials capable of reducing or stopping the transmission of sounds. '232 Patent (Ex. 1), 6:11-15; 4:56-59; 6:55-60; Jones Decl. (Ex. 5) ¶22-24.

Dictionary definitions also support STI's construction. For example, "acoustic" means "relating to sound or hearing" and "insulate" means "place material between one thing and another to prevent loss of heat or intrusion of sound." Ex. 3 (OED at 6, 377). Thus, when a material is "acoustical insulating," it is capable of reducing intrusion (i.e., transmission) of sound. *See* Jones Decl. (Ex. 5) ¶23.

By contrast, Hilti's construction improperly adds a new limitation. The claim is not limited to a "material that is **specifically adapted** to provide acoustical insulating properties" as Hilti proposes (emphasis added by STI). It should include material that naturally has, without specific adaptation, this characteristic. This improper attempt to rewrite claim language should be rejected. *Supra* at 149, n.29; Jones Decl. (Ex. 5) ¶22-25.

b. Hilti's Answering Position

To narrow issues for the Court, Hilti adopts STI's plain meaning construction, which resolves the parties' dispute concerning this term.

C. '868 PATENT – DISPUTED TERMS

1. "Moveable relative to one another" (claims 1, 9)

STI	Hilti
Plain meaning – no construction necessary.	This term should be construed according to its plain meaning, as informed by the intrinsic record, which is "moveable in a defined relationship to one another"

a. STI's Opening Position

This phrase does not need construction; plain and ordinary meaning suffices. *Supra* at 147-148, n.28.

The Court should reject Hilti's proposed construction, which equates "relative" to "in a defined relationship." This is inconsistent with the intrinsic

evidence and overcomplicates the meaning of this term for the jury. The specification does not define relative in this manner, nor does it even use the phrase "defined relationship." Similarly, the prosecution history does not support Hilti's construction. This is another attempt by Hilti to rewrite the claim to better align with its litigation positions, and it should be rejected. *Supra* at 120, n.16; Jones Decl. (Ex. 5) ¶26-27.

Even worse, Hilti's rewriting of this claim term makes it confusing for the jury rather than helping to clarify its meaning. This defies the purpose of claim construction. *See Big D Indus., Inc. v. Fresh Products, Inc.*, 2022 WL 1017908, *2 (W.D. Okla. Apr. 5, 2022) (explaining the purpose of claim construction is discerning a POSITA's meaning and conveying "that meaning understandably to a lay jury."); *Recticel Automobilesysteme GmbH v. Automotive Components Holdings, LLC*, 2012 WL 1276003, *2 (E.D. Mich. Apr. 16, 2012) (explaining that one goal of claim construction is "to provide a construction that will be understood by the jury who might otherwise misunderstand a claim term"); Jones Decl. (Ex. 5) ¶26-27.

b. Hilti's Answering Position

This term appears in claims 1 and 9 and recites that "first and second housing members" are "moveable relative to one another . . . between an assembled condition

. . . and an open condition." '868 patent at 6:59-65, 7:32-37.[35] STI argues (*supra* at 168) that this term takes its plain meaning but declined to articulate its plain meaning construction while Hilti's position is that this term should be construed according to its plain meaning to mean that the housing members are "moveable in a defined relationship to one another."

Hilti's construction is apparent from the entirety of the claim language as read in view of the intrinsic record. Claim 1 recites: "the housing including first and second housing members which are completely detachable from one another ***and*** moveable relative to one another between an assembled condition . . . and an open condition." '868 patent at 6:59-65. Thus, claim 1 recites two requirements: 1) the housing members must be moveable relative to one another and 2) the housing members must be completely detachable from one another.

Nonetheless, STI advocates for an interpretation of this term under which two housing members that are detachable from each other must also be moveable relative to one another. For example, STI's interpretation would cover a device that is separated into two pieces with one piece placed on the 10th floor of a building and another in an elevator heading up to the 14th floor of the building. Ex. 20, ¶53. This

[35] The '868 patent is Appendix I to the Joint Claim Construction Chart. *See* D.I. 97-9.

interpretation ignores the "relative to" language, which implies a defined relationship between the housing members such that they can move "relative to one another." *Id.*, ¶¶51-52. The claim does not say only that the housing members are moveable, but rather that they are moveable "***relative*** to one another." *Id.*

STI's interpretation would also render the "moveable relative to one another" requirement superfluous in view of the "completely detachable" recitation. *Id.*, ¶53. There would be no need to recite "completely detachable" if "moveable relative to one another" was so broad as to cover any moveability regardless of the relationship (or lack thereof) between the two housing members when they move. *Id.*, ¶54. That is, moveability is an inherent feature of any "completely detachable" housing members. *Id.*, ¶53. Jones confirmed this during his deposition:

> Q. Well, what additional requirement does "movable relative to one another" add that isn't already inherent in "completely detachable"?
>
> A. I just don't know the answer to that. I don't know what it adds or what it doesn't add. There may be some technicality that I don't understand but I don't understand – I don't see why they're not mutually applicable.
>
> Q. Coextensive?
>
> A. Yeah. "Completely detachable and movable" doesn't – doesn't add any restrictions that I can see.
>
> Q. But does – so we're clear, does "movable relative to one another" add anything that wouldn't have already been inherent in the inclusion of the phrase "completely detachable" in your opinion?
>
> A. I can't think of anything.

Ex. 6 at 185:17-187:1, 172:20-175:23, 179:5-22.

"In *Phillips*, [the Federal Circuit] reinforced the importance of construing claim terms in light of the surrounding claim language, such that words in a claim are not rendered superfluous." *Digital-Vending Servs. Int'l, LLC v. Univ. of Phoenix, Inc.*, 672 F.3d 1270, 1275 (Fed. Cir. 2012). STI's interpretation runs afoul of this settled principle by reading the "relative to" language out of the "moveable relative to one another" claim requirement. Unlike STI, Hilti's understanding of the plain meaning of "moveable relative to one another" as reciting a defined relationship between the housing members when they move gives independent meaning to "moveable relative to one another" that does not collapse into the "completely detachable" requirement.

Hilti's understanding of the plain meaning is consistent with the specification, which describes the housing member's moveability in a defined relationship between an open and assembled condition:

> To facilitate positioning the housing 102 about existing cables, conduits and the like, the first and second housing members 110, 120 are moveable relative to one another to an open configuration with an open space on at least one side of the housing 102 such that the housing 102 can be positioned about a sleeve 12, cables or conduits, as illustrated in FIGS. 10 and 11. In the illustrated embodiment, the first and second housing members 110, 120 are hingedly interconnected to one another along the side panels 112, 122, with a releasable latching assembly along the side panels 113, 123 to facilitate the open configuration.

'868 patent at 4:1-11. Figs. 10 and 11 are reproduced below.

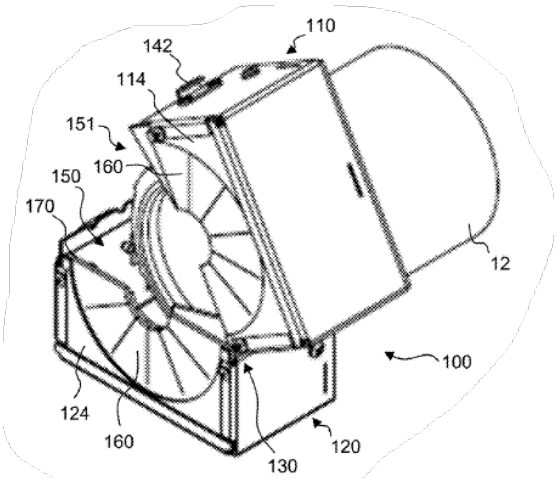

Fig. 10

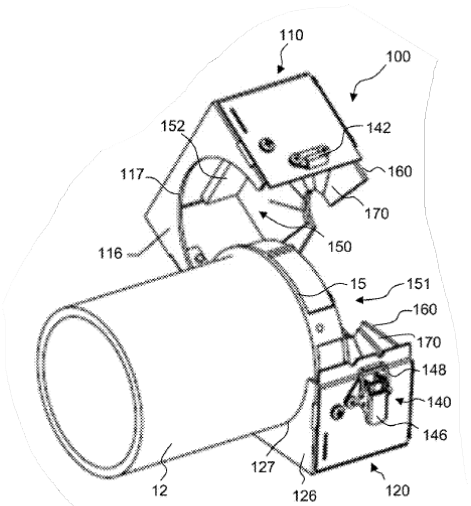

Fig. 11

As shown, the housing members move relative to one another in a defined relationship as a result of being "hingedly interconnected." Ex. 20, ¶57. That same section of the patent explains that the hinged assembly which allowed the housing members to be moveable relative to one another ***also*** allows for complete detachability of the housing members because "the hinge assembly" can "be disassembled in the event it is necessary to completely disconnect the first housing member 110 from the second housing member 120." '868 patent at 4:26-34; Ex. 20, ¶57. Thus, consistent with claim 1, the specification explains that the housing members incorporate two ***separate*** features: 1) they are moveable in a defined relationship with each other and 2) they are completely detachable from one another. *Id*.

Hilti's understanding of the plain meaning is further consistent with the file history. To gain allowance, STI accepted an "examiner's amendment" to claim 1 in which the examiner added the separate "completely detachable limitation" as shown in underlining below.

> a housing having a wall surface extending between opposed front and rear panels with an inner chamber defined therein, the front panel defining a front opening therethrough and the rear panel defining a rear opening therethrough, the housing including first and second housing members which are <u>completely detachable from one another and</u> moveable relative to one another between an assembled condition wherein the first and second housing members are interconnected and the wall surface is substantially continuous about the internal chamber, and an open condition wherein at least a portion of the first and second housing members are spaced from one another such that at least a portion of the wall surface is non-contiguous to define an opening into the internal chamber; and

Ex. 13 at 20.

Prior to amendment, claim 1 had been rejected in view of Klein (U.S. Patent Application Publication No. 2015/0251028) (owned by Hilti and shown below).

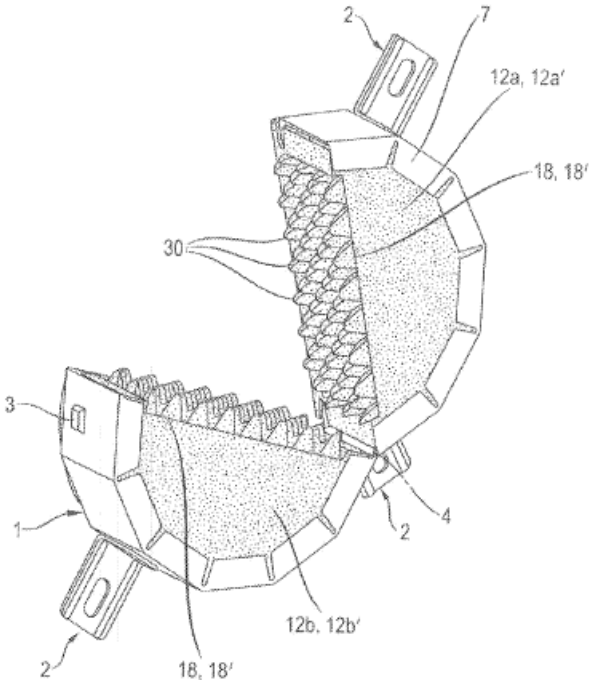

Ex. 14, Fig. 5.

As shown, Klein includes a pivot axis 4, which allows the two housing members to move in a defined relationship to one another. To gain allowance, STI had to accept the examiner's amendment to claim 1 requiring complete detachability ***in addition*** to moveability relative to one another. If STI invented anything (and Hilti strongly disagrees that it did), it is a device that has housing members that move in a defined relationship with each other and are ***also*** completely detachable. Ex. 20, ¶¶58-60. Hilti's construction appropriately captures that understanding of the alleged invention.[36]

[36] There is no dispute between the parties that "moveable relative to one another" should be construed to mean the same thing in claims 1 and 9.

c. STI's Reply Position

This term does not require the housing members to be moveable "in a defined relationship" to one another. Hilti's position that this clear phrase requires such further narrowing is based on its assertion that "STI's interpretation would . . . render the 'moveable relative to one another' requirement superfluous in view of the 'completely detachable' recitation." *Supra* at 170. The obvious flaw in Hilti's argument is that STI did not proffer any "interpretation" of this claim phrase to begin with. Rather, STI's position is that this claim phrase needs no construction; plain and ordinary meaning suffices. And contrary to Hilti's assertions, the plain meaning of the phrase "moveable relative to one another"—without improperly replacing the word "relative" with "in a defined relationship"—does not render superfluous the "completely detachable" limitation.

Indeed, Hilti's reliance on the Examiner's addition of the "completely detachable" limitation during prosecution (*see supra* at 174, citing Ex. 13 at 20) supports STI's position. At bottom, STI agrees that "completely detachable" means something different than "moveable relative to one another"[37]; if it was redundant, STI and the Examiner would not have amended the claim.

[37] During his deposition, Dr. Sturges described these elements as "two distinct requirements" of claim 1. Ex. 26 (Sturges Deposition) 43:5-16.

Prior to the Examiner's amendment, claim 1 already included the "moveable relative to" limitation; the Examiner simply added "completely detachable" afterwards, as an additional limitation to distinguish claim 1 from the prior art. In doing so, the Examiner did not assign any special meaning to the phrase "moveable relative to"—such as, for example, the "defined relationship" interpretation Hilti proposes. There simply is no indication that the Examiner read the words "moveable relative to" to mean anything other than their plain and ordinary meaning when he added the "completely detachable" limitation. And neither the Examiner nor the Applicant deleted the "moveable relative to" limitation after "completely detachable" was added. This strongly supports STI's conclusion that the plain meaning of "moveable relative to"—without the additional "defined relationship" limitation Hilti espouses—is not superfluous in light of the "completely detachable" limitation. And this makes perfect sense. Two things can be "moveable relative to" one another without being "completely detachable" from one another. Thus, these phrases are not synonymous.

When the Examiner added the "completely detachable" limitation, the original words – "moveable relative to one another" – and their meaning, could not have changed. Indeed, Hilti's redundancy argument ignores the timing of the Examiner's amendment—*i.e.*, the "moveable relative to" language was already present in the claim when the Examiner made the amendment. The Examiner plainly

further narrowed the claim by adding the "completely detachable" limitation; he did not create a redundancy. Accordingly, the Court should reject Hilti's strained argument that one must construe "moveable relative to" as "moveable in a defined relationship to" to save it from being superfluous in light of the "completely detachable" limitation.

What's more, Hilti's position—which rests on the faulty premise that the "completely detachable" limitation of claim 1[38] renders the "moveable relative to" language superfluous unless "defined relationship" is read into the claim—entirely ignores that claim 9, which also includes the "movable relative to" limitation, does not include any "completely detachable" limitation. Critically, Hilti and STI agree that "'moveable relative to one another' should be construed to mean the same thing in claims 1 and 9." *See supra* at 175, n. 36. Yet Hilti's basis for construing "moveable relative to" as requiring a defined relationship—i.e., its redundancy argument based on the "completely detachable" limitation—does not at all apply to claim 9 because claim 9 is devoid of any such "completely detachable" requirement. Thus, Hilti's rationale and its interpretation of "moveable relative to" cannot possibly be correct.

[38] Dr. Sturges' declaration testimony regarding the "moveable relative to one another" limitation (which spans paragraphs 50-60 of his declaration) relies on and discusses the "completely detachable" limitation in paragraphs 52-60. Sturges confirmed this during his deposition. Ex. 26 (Sturges Deposition) 44:1- 46:5.

Further, Hilti's argument that STI's "interpretation ignores the 'relative to' language" (*supra* at 170-171) should be rejected. STI's position that "relative to" does not require a defined relationship and does not read the words "relative to" out of the claim.

Finally, Hilti has identified no special definition provided by the inventors (there is none), no prosecution disclaimer (there is none), nor any other source to justify departing from the plain meaning of this phrase. While Hilti purports to rely on "the plain meaning of 'moveable relative to one another'" (*supra* at 172), Hilti points to no intrinsic or extrinsic evidence suggesting that "in defined relationship to" is a plain and ordinary understanding of the phrase "relative to." Hilti's reliance on the specification is also misplaced. Hilti argues (*supra* at 172-173) that the specification supports its construction because Figures 10 and 11 and the accompanying text show that "the housing members move relative to one another in a defined relationship as a result of being 'hingedly interconnected.'" But as the specification makes clear, the housing members "are hingedly connected . . . to facilitate the open configuration" merely "***[i]n the illustrated embodiment***. . . ." ('868 patent at 4:1-11). That is, the specification does not define "moveable relative to" as requiring a hinged connection; it merely identifies a hinged connection as one example.

Moreover, in relying on this "hingedly connected" example to justify its overly narrow construction, Hilti runs afoul of the doctrine of claim differentiation by improperly importing limitations from dependent claims 3 (which requires the housing members to be "pivotally connected" to one another), 4 and 5 (which require a hinge connecting the two housing members) into independent claims 1 and 9 (which do not require a hinged connection between the housing members). Indeed, Dr. Sturges confirmed that "[t]he requirement for the hinge only shows up in dependent Claims 3, 4, and 5 as I read it." Ex. 26 (Sturges Deposition) 51:4-6; 48:17-51:2.

In sum, the Court should reject Hilti's tortured interpretation of "moveable relative to" and find that the phrase is clear on its face and needs no construction.

d. Hilti's Sur-Reply Position

Rather than articulate a plain meaning construction of this term, STI simply maintains (*supra* at 176) that the term needs no construction. In so doing, STI fails to articulate its understanding of the plain meaning of the phrase "relative to one another," other than to say that it does not require a defined relationship. But this does not help the Court decide what the claim means. Conversely, Hilti's construction makes sense in view of the claim as a whole and ensures that "moveable relative to one another" means something more than just capable of being moved. In the absence of any contrary construction from STI, the Court should adopt Hilti's

construction, which is consistent with the specification.

STI's argument (*supra* at 176-177) that the original claim included "moveable relative to one another" when the Examiner made his amendment actually supports Hilti's argument by highlighting that the Examiner must have understood "relative to" to require a defined relationship in one of two ways. First, the examiner may have understood that "moveable relative to one another" originally included housing members that were moveable from each other (regardless of their relationship) as well as housing members that moved in a defined relationship relative to one another (consistent with all specification embodiments). In that scenario, the examiner's addition of "completely detachable" narrowed "moveable relative to one another" to require a defined relationship. Otherwise, the claim would have been of the same scope post-amendment because two housing members that are just moveable from each other must also be detachable to be moveable.[39] In other words, any prior art that disclosed housing members that were capable of being moved from each other would have necessarily included detachable housing members because the moveable term is between an open condition and an assembled condition.

[39] Similarly, STI also argues (*supra* at 177-178) that two things can be moveable relative to one another without being completely detachable from one another. And that is true, so long as they move in a defined relationship with one another. Otherwise, two housing members that are moveable from each other—without a defined relationship—will always be completely detachable.

Second, the examiner could have understood "moveable ***relative*** to one another" according to its plain meaning as requiring a defined relationship. In that more likely scenario, the examiner's amendment narrowed the claim by reciting a specific set of housing members that were both moveable relative to one another in a defined relationship while at the same time being completely detachable from one another. This makes the most sense given the prior art, which disclosed housing members that moved relative to one another without an express disclosure of complete detachability. *Supra* at 175.

STI also argues (*supra* at 177-178) that the Examiner "plainly further narrowed the claim by adding the 'completely detachable' limitation" and "did not create redundancy." But that is exactly Hilti's point. If "moveable relative to one another" does not require a defined relationship, then the examiner ***did*** create redundancy because two housing members that move from one another between an open and assembled condition are ***already*** "completely detachable." Hilti's plain meaning understanding of "moveable relative to one another" that requires a defined relationship avoids such redundancy.

STI also argues (*id.*) that Hilti's plain meaning construction "entirely ignores" that claim 9 does not include the "completely detachable" limitation of claim 1, suggesting that Hilti's entire basis for its construction is based on language in claim 1 that does not appear in claim 9. But that does not accurately reflect Hilti's position.

Indeed, STI attempted this flawed argument during Sturges' deposition:

> Q. Would you say that your opinion regarding the construction of the phrase "mov[e]able relative to one another" is primarily based on your understanding of the "completely detachable" claim term and its relationship to the "movable relative thereto" limitation?
>
> A. No.

Ex. 26 at 43:17-25.

Instead, Sturges "start[ed] [his] analysis by focusing on the phrase "relative to one another." Ex. 20, ¶51. And that term must be considered in view of the claims' recitation that the housing members are "moveable relative to one another between an assembled condition . . . and open condition . . . to ***define*** an opening into the internal chamber." '868 patent at 6:60-7:2. In that context, a POSITA understands the claims to require a defined relationship between the housing members as they move relative to one another to "define an opening into the internal chamber." Again, this is consistent with the specification, which, while not limiting, "is the single best guide to the meaning of a disputed term." *Phillips* 415 F.3d at 1315; *see supra* at 172-173.

STI also argues (*supra* at 180) that Hilti's plain meaning construction runs afoul of claim differentiation because claims 4 and 5 recite a hinge. But Hilti's plain

meaning construction does not require a hinge and instead includes all structures (e.g., a ball and socket) that would provide a defined relationship. While STI attempts to favorably cite Sturges' testimony that "[t]he requirement for the hinge only shows up in dependent Claims 3, 4, and 5 as I read it," this simply serves to demonstrate that Sturges did not believe claim 1 to require a hinge despite his "defined relationship" understanding—consistent with Hilti's position.

2. "the housing including first and second housing member which are completely detachable from one another and moveable relative to one another between an assembled condition wherein the first and second housing members are interconnected and the wall surface is substantially continuous about the internal chamber, and an open condition wherein at least a portion of the first and second housing members are spaced from one another such that at least a portion of the wall surface is non-contiguous to define an opening into the internal chamber" (claim 1)

STI	Hilti
Plain meaning – no construction necessary.	"the housing including first and second housing members which are completely detachable from one another and moveable relative to one another while not completely detached between an assembled condition wherein the first and second housing members are interconnected and the wall surface is substantially continuous about the internal chamber, and an open condition wherein at least a portion of the first and second housing members are spaced from one another such that at least a portion of the wall

	surface is non-contiguous to define an opening into the internal chamber such that the firestopping apparatus device can be positioned the opening in the housing can be positioned about a sleeve, cables, or conduits and returned to the assembled condition."

a. STI's Opening Position

Hilti proposes construing the above lengthy claim phrase (the "Claim 1 Housing Members Element"), which comprises over 60% of claim 1 of the '868 patent.

Construing such a long phrase is unhelpful to the jury. This phrase does not need construction; plain and ordinary meaning suffices. *Supra* at 147-148, n.28; Jones Decl. (Ex. 5) ¶28-30.

Notably, the specification never defines the Claim 1 Housing Members Element beyond its plain and ordinary meaning, and the intrinsic record indicates no intent to change that meaning. *See Hill-Rom Servs., Inc.*, 755 F.3d at 1371. Indeed, the specification further supports that this phrase describes the housing of the claimed firestopping device in an "assembled" condition and an "open" condition. Jones Decl. (Ex. 5) ¶28-30. For example, Figures 3 (below), 12, and 13 illustrate the "assembled condition." Jones Decl. (Ex. 5) ¶28. Figures 10, 11, and 18 (below) illustrate "open conditions." Jones Decl. (Ex. 5) ¶29. These conditions are readily

understandable and clearly illustrated. Thus, no need exists for further elaboration. *See* Jones Decl. (Ex. 5) ¶28-30.

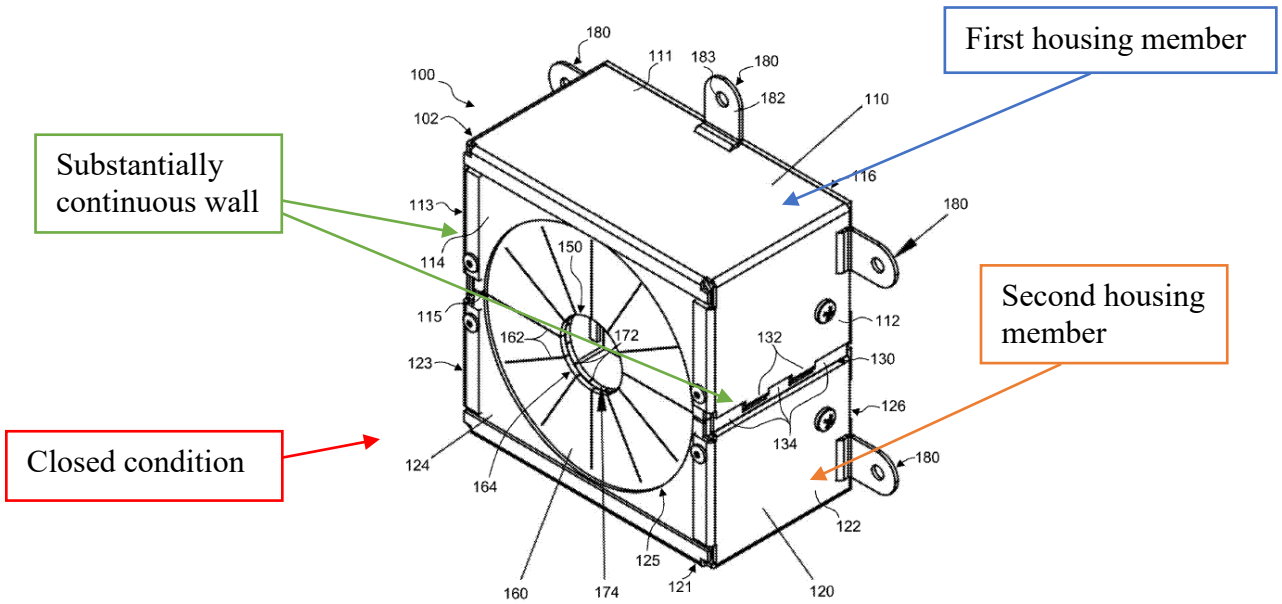

Fig. 3

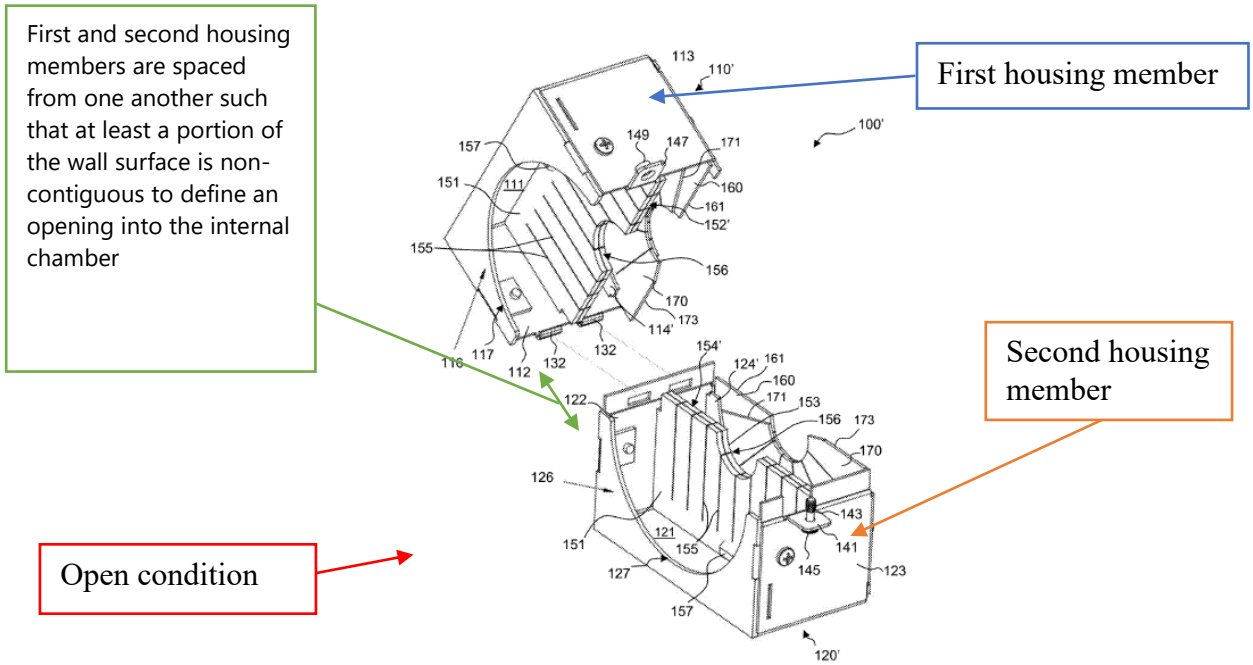

Fig. 18

The Court should reject Hilti's proposal. Hilti makes no effort to actually define any of the words in the claim. Hilti's construction merely repeats the words verbatim (further supporting STI's position that no construction is necessary) and improperly injects two additional extraneous limitations: (1) "while not completely detached" ("Phrase 1") and (2) "such that the firestopping apparatus device can be positioned the opening in the housing can be positioned about a sleeve, cables, or conduits and returned to the assembled condition" ("Phrase 2").

Phrase 1 appears nowhere in the claims or specification, and thus finds no support in the intrinsic evidence. *See AIA Eng'g Ltd.*, 657 F.3d at 1272 ("the specification is the single best guide to the meaning of a claim term."); Jones Decl. (Ex. 5) ¶31.

Phrase 2 is grammatically incorrect, nonsensical, and confusing. Hilti's construction thus frustrates the purpose of claim construction and should be rejected. *See AIA Eng'g Ltd.*, 657 F.3d at 1276 ("We strive . . . to avoid nonsensical results in construing claim language."); *Immersion Corp. v. HTC Corp.*, 2015 WL 581572, *8 (D. Del. Feb. 11, 2015) (finding no construction needed where "a jury would be more likely to be confused by [the proposal] than by the term itself."). In addition, Hilti's added language improperly imports limitations from the specification and should be rejected for this additional reason. *Supra* at 149, n.29; Jones Decl. (Ex. 5) ¶31-33.

3. "the housing including first and second housing members which are moveable relative to one another between an assembled condition wherein the first and second housing members are interconnected and the wall surface is substantially continuous about the internal chamber, and an open condition wherein at least a portion of the first and second housing members are spaced from one another such that at least a portion of the wall surface is non-contiguous to define an opening into the internal chamber" (claim 9)

STI	Hilti
Plain meaning – no construction necessary.	"the housing including first and second housing members which are moveable relative to one another between an assembled condition wherein the first and second housing members are interconnected and the wall surface is substantially continuous about the internal chamber, and an open condition wherein at least a portion of

	the first and second housing members are spaced from one another such that at least a portion of the wall surface is non-contiguous to define an opening into the internal chamber such that the opening in the housing can be positioned about a sleeve, cables, or conduits and returned to the assembled condition."

a. STI's Opening Position

This lengthy phrase is very similar to the phrase discussed in Section III.C.2 (*supra* at 184-188) . It does not need construction, and plain meaning suffices, for the same reasons discussed in Section III.C.2.

As with the phrase discussed in Section III.C.2, Hilti's construction of this phrase merely repeats the words in the claim verbatim, which further supports STI's position that this phrase need not be construed. The phrase Hilti adds to this claim—"such that the opening in the housing can be positioned about a sleeve, cables, or conduits and returned to the assembled condition"—improperly imports limitations from the specification. Although the specification describes positioning the housing around "a sleeve, cables, or conduits," claim 9 is not so limited. *See* '868 Patent (Ex. 2), 4:1-7. Hilti's attempt to import this language into claim 9 from the specification should be rejected. *See* discussion and annotated figures *supra* section III.C.2; *see also* Jones Decl. (Ex. 5) ¶34-37.

b. Hilti's Answering Position

Claims 1 and 9 recite "an open condition wherein at least a portion of the first and second housing members are spaced from one another such that at least a portion of the wall surface is non-contiguous to define an opening into the internal chamber." '868 patent at 6:65-7:2, 7:37-41. Fig. 10 illustrates the "open configuration" (*i.e.*, the open condition),[40] which allows the device to open around sleeve 12 while Fig. 12 illustrates the assembled condition in which the device is closed around the sleeve 12.

[40] Contrary to STI's argument (*supra* at 186-187), Fig. 18 does not depict the "open configuration." Instead, Fig. 18 is an "exploded view" of the device while Figs. 10 and 11 show the "open configuration," which occurs when the device is opened with the housing members still connected. Jones acknowledged this during his deposition. Ex. 6 at 171:1-172:11.

Open Condition	Assembled Condition
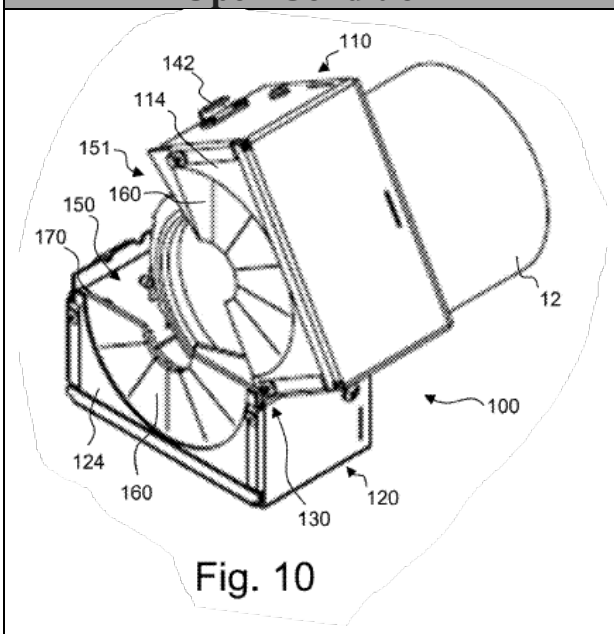 Fig. 10	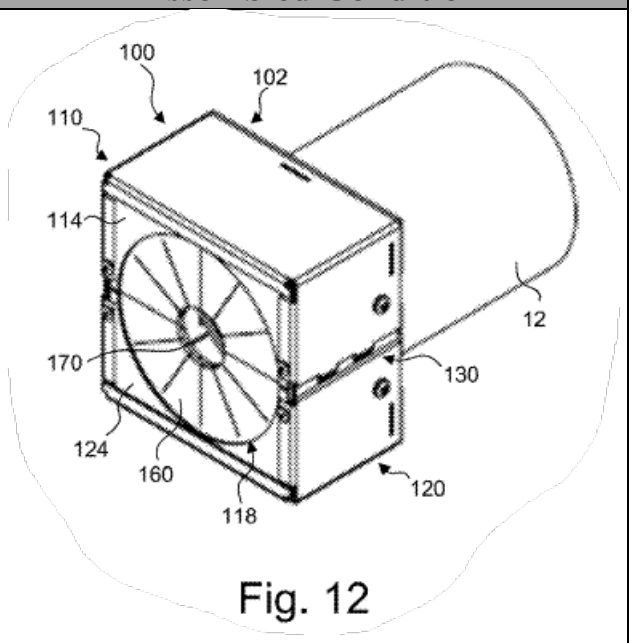 Fig. 12

Hilti proposes construing this language to require that the "open condition . . . define an opening into the internal chamber such that the opening in the housing can be positioned about a sleeve, cables, or conduits ***and returned to the assembled condition***."[41] The parties' dispute on this term is whether the device of claims 1 and 9 must be capable of being closed around a conduit as the device moves from the open to assembled condition. Hilti's position is that a POSITA understands the claims recite such a device while STI argues that its claims cover a device where the housing members need not be capable of closing around a conduit when they move

[41] STI seizes (*supra* at 187-188) on a typographical error in Hilti's articulation of its construction for claim 1, but not claim 9. Hilti's construction stated for the same term claim 9 is the correct construction.

in a defined relationship with one another.[42] *See* Ex. 20, ¶¶60-62.

STI's infringement contentions illustrate the parties' dispute. Specifically, STI has accused Hilti's CFS Modular Sleeve ("Hilti's Accused Sleeve") of infringing claims 1 and 9 of the '868 patent. Hilti's Accused Sleeve includes housing members that are completely detachable from each other, but which are not moveable relative to one another in a defined relationship. However, to give the illusion that the accused housing members are moveable in a defined relationship to each other, STI constructed a false hinge that would never allow Hilti's Accused Sleeve device to close around a cable. This can be seen with reference to the below image from STI's infringement contentions (annotated by Hilti):

[42] STI also disputes that claim 1 requires that the housing members be moveable relative to one another while not completely detached. This dispute is subsumed in the parties' dispute concerning "moveable relative to one another."

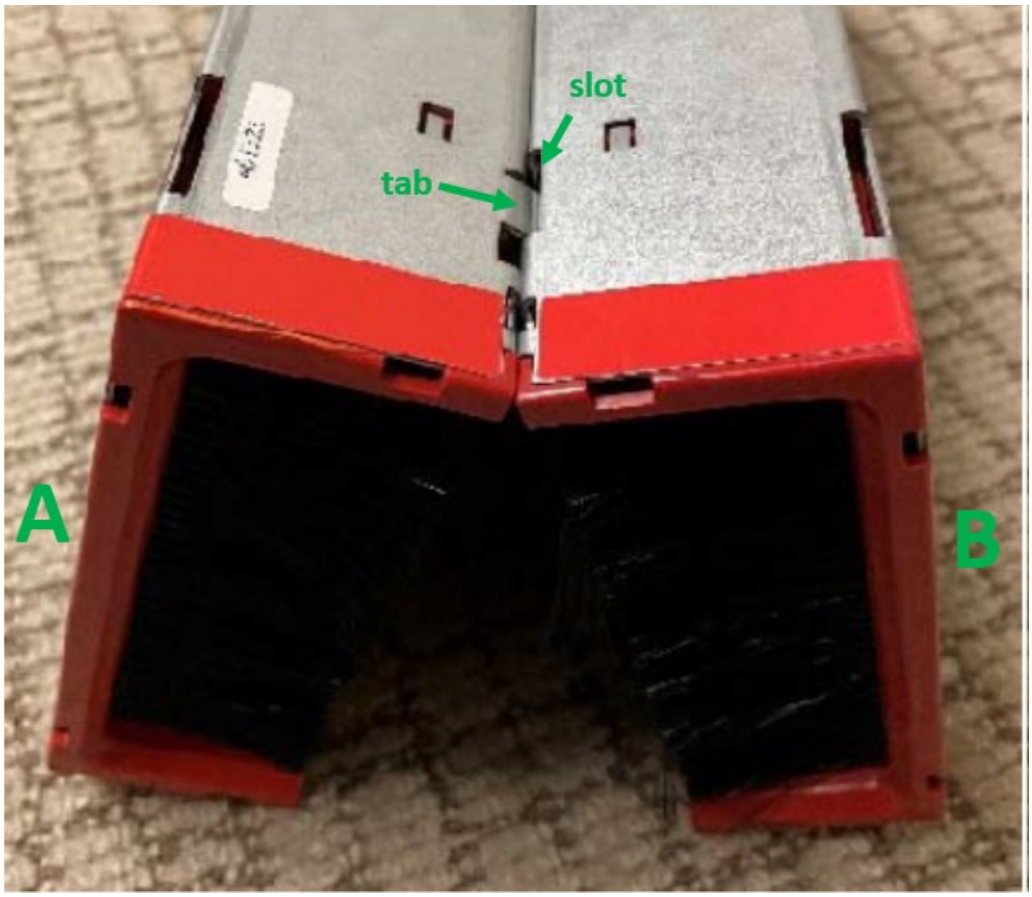

Ex. 15 at 29 (annotated).

As shown, Hilti's Accused Sleeve includes a tab and slot arrangement in which the tab is inserted into the slot, slidably moved, and then the device is closed and installed around cables. Ex. 20, ¶65. To give the illusion that the tab and slot configuration form a type of hinge, STI laid the device on its side—in reality, the portion labelled A would be the bottom of the device and B would be the top (or vice versa). *Id*. Hilti's Accused Sleeve's tab and slot arrangement is illustrated in the image below from the instructions for use of Hilti's Accused Sleeve.

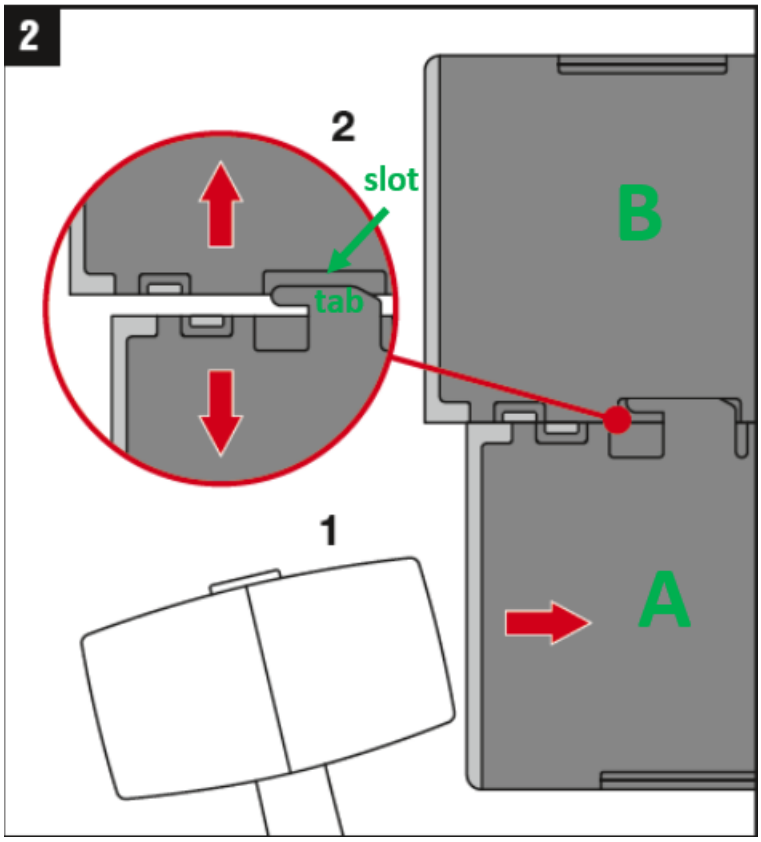

Ex. 16 at 2 (annotated).

When the two housing members are configured using STI's false hinge to supposedly move relative to one another, Hilti's Accused Sleeve cannot be returned to the assembled condition to close around cables because the tabs and slots on the opposite side of the false hinge would not be correctly aligned to allow the device to close. Ex. 20, ¶65. Hilti's construction appropriately captures the purpose of the invention and requires that the device be able to open ***and*** close around conduits as the housing members move relative to one another. *See Vivid Techs., Inc. v. Am. Sci. & Eng'g, Inc.*, 200 F.3d 795, 805 (Fed. Cir. 1999) (stating a patent cannot be construed in a manner that defeats the purpose of the invention).

c. STI's Reply Position

Hilti's Answering Position condenses two different claim phrases from two different independent claims and discusses them together. Specifically, Hilti initially proposed separately construing two similar, lengthy claim phrases from claims 1 and 9. *See* D.I. 97, Appendix A at 20-22 (claim terms 7 and 8); *supra* at 184-185, 188-189.

The difference between these two claim phrases is that claim 1 includes the limitation "completely detachable from one another" while claim 9 does not. Hilti's initial proposed constructions of the Claim 1 Housing Members Element and the corresponding phrase in claim 9 were similar, except that Hilti's construction of the Claim 1 Housing Members Element included the extraneous phrase "while not completely detached" (referenced as "Phrase 1" in STI's Opening Position above) and apparently included some typographical errors in Hilti's second extraneous phrase (referenced as "Phrase 2" in STI's Opening Position above).

Curiously, Hilti's Answering Position focuses exclusively on Phrase 2 and is virtually silent on the "while not completely detached" language initially appearing in Hilti's construction of the Claim 1 Housing Members Element. Hilti relegates its entire threadbare discussion of Phrase 1 to a cryptic footnote (*supra* at 192, n. 42): "STI also disputes that claim 1 requires that the housing members be moveable relative to one another while not completely detached. This dispute is subsumed in

the parties' dispute concerning 'moveable relative to one another.'" Hilti appeared to confirm in an email that it is perpetuating a construction of the Claim 1 Housing Members Element that includes the phrase "while not completely detached." *See* Ex. 27.

Despite Hilti's apparent desire to continue to include Phrase 1 in its construction of the Claim 1 Housing Members Element, Hilti failed to discuss it in its Answering Position. Further, Dr. Sturges also did not opine on whether the phrase "while not completely detached" should be included in the construction of the Claim 1 Housing Members Element. In fact, Dr. Sturges confirmed that he does not endorse a construction that includes the phrase "while not completely detached":

> Q. Does your interpretation or construction of this claim phrase in Claim 1 require the first and second housing members to be movable relative to one another while not completely detached?
>
> Mr. Alciati: Objection. Scope.
>
> A: I haven't opined on that because those are separate concepts and "while" doesn't enter into it.

Ex. 26 (Sturges Deposition) 55:19-56:2.

To be sure, Hilti had every opportunity in its Answering Position (Hilti's initial briefing on this issue) to attempt to justify its inclusion of Phrase 1 in its construction and to present expert testimony on this issue, yet chose not to. Any

attempt by Hilti to present such evidence in its sur-reply would be untimely and should be rejected. *See* D. Del. LR 7.1.3(c)(2) ("The party filing the opening brief shall not reserve material for the reply brief which should have been included in a full and fair opening brief."); *Anspach ex rel. Anspach v. City of Philadelphia, Dep't of Pub. Health*, 503 F.3d 256, 258 n.1 (3d Cir. 2007) ("[F]ailure to raise an argument in one's opening brief waives it."); *Rockwell Techs., LLC. v. Spectra–Physics Lasers, Inc.*, 2002 WL 531555, at *3 (D. Del. Mar. 26, 2002) ("Rockwell's tactic of reserving new arguments for its reply brief amounts to impermissible 'sandbagging.'").

As to the other extraneous phrase Hilti's construction seeks to inject into the claims—namely, "such that the opening in the housing can be positioned about a sleeve, cables, or conduits and returned to the assembled condition"—it is now clear that Hilti's position is based on its fundamental misapprehension (or mischaracterization) of STI's infringement position. Hilti's accusation that "STI constructed a false hinge . . . [t]o give the illusion that the tab and slot configuration [of Hilti's accused device] form a type of hinge" (*supra* at 192-193) is entirely baseless and inappropriate. STI did no such thing. Rather, STI's Infringement Contentions include the photo shown in Hilti's Answering Position (at 193) to show that the tabs and slots of Hilti's accused device infringe the "pivotally connected" and "hinge" limitations of dependent claims 3-5 literally and under the doctrine of

equivalents. *See* Exhibit 15 (Exhibit A to STI's Infringement Contentions) at 22-31. STI did not manipulate Hilti's product in any way, and certainly did not create a "false hinge."

Contrary to Hilti's misguided assertion, it has never been STI's position that "its claims cover a device where the housing members need not be capable of closing around a conduit when they move in a defined relationship with one another."[43] (*supra* at 191-192). Indeed, with respect to the "assembled condition" limitation of claims 1 and 9, STI's Infringement Contentions clearly show an image of Hilti's device ***closed around cables***:

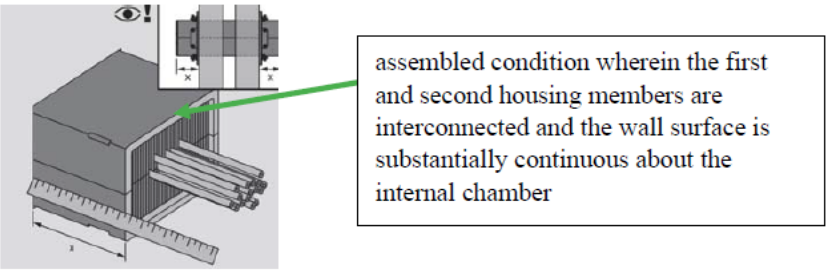

See Exhibit 15 (Exhibit A to STI's Infringement Contentions) at 9, 46. The Court should ignore Hilti's attempt to cast aspersions on STI.

As explained in STI's Opening Position, there is no reason to inject Hilti's extraneous limitation into the claims; the phrases do not need to be construed

[43] As explained in Section III.C.1 regarding the claim phrase "moveable relative to one another," STI argues that the claims do not require the housing members to be moveable in a defined relationship to one another. Thus, it makes no sense for Hilti to assert that STI contends that the housing members need not be capable of closing around a conduit ***when they move in a defined relationship to one another***.

because their plain meaning suffices. Hilti asserts that its "construction appropriately captures the purpose of the invention"—implying that the actual words of the claim somehow do not "appropriately capture[] the purpose of the invention." *Supra* at 194. To the contrary, STI simply proposes leaving the claim as is, while Hilti attempts to rewrite it by adding additional limitations otherwise absent from the claim. *See supra* at 190-194. For the reasons discussed in STI's Opening Position, and because it is clear that Hilti's position is based on its misunderstanding (or mischaracterization) of STI's infringement position, the Court should reject Hilti's proposed construction.

Finally, in footnote 40, Hilti attacks STI's reliance on Figure 18 of the '868 patent. In making this argument, Hilti misses the point of STI's reliance on Figure 18, as well as Dr. Jones's opinion. While the specification describes Figure 18 as a "partially exploded" view, it illustrates an aspect of the device that is not easily visible from Figures 10 and 12, which is that the two housing members can be completely detached in the open configuration (or "condition"). Contrary to Hilti's assertion, the specification makes clear that the housing members need not remain connected in the open configuration. *See* '868 Patent at 4:1-6 (explaining that the housing members are "moveable relative to one another to an open configuration with an open space **<u>on at least one side of the housing</u>**.").

d. Hilti's Sur-Reply Position

Properly understood, this term requires a device that can be opened around a cable, positioned around the cable, and then returned to its assembled condition. STI appears (*supra* at 197-198) to agree. Accordingly, STI should have no objection to construing the claim as Hilti proposes.

4. "Front and rear panels" (claim 1)

STI	Hilti
Plain meaning – no construction necessary. Alternatively, "front layer and rear layer that are physically distinct from other components of the housing."	"front and rear panels configured to be installed on the same side of a wall"

a. STI's Opening Position

This phrase does not need construction; plain and ordinary meaning suffices. *Supra* at 147-148, n.28.

Alternatively, if the Court decides to construe this phrase, the Court should adopt STI's alternative construction: "front layer and rear layer that are physically distinct from other components of the housing." STI's construction is consistent with the specification. Jones Decl. (Ex. 5) ¶38-42. The specification consistently uses reference numerals 114, 124 for the front panel and reference numerals 116, 126 for the rear panel. In each case, the front and rear panels are physically distinct from other components of the housing. For example, the figures show both the front panel

114, 124 and rear panel 116, 126 as being separate components from and fastened to the side panels of the housing. *See, e.g.*, '868 Patent (Ex. 2), Fig 4 (annotated with front panels in green, fasteners in blue); Fig. 11 (annotated with rear panels in green, fasteners in blue); *id*., 3:34-39; 4:59-61; 5:1-12; 5:51-58. The specification does not disclose any other embodiments of a front and rear panel. *See* Jones Decl. (Ex. 5) ¶38-42.

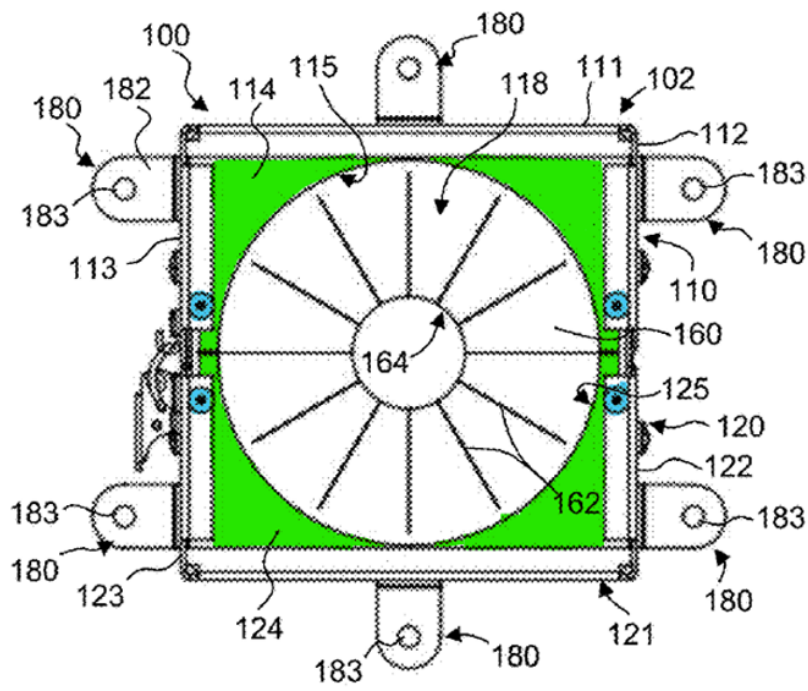
100
180
182
114
115
118
111
102
112
183
113
110
160
164
125
120
122
162
123
124
121

Fig. 4

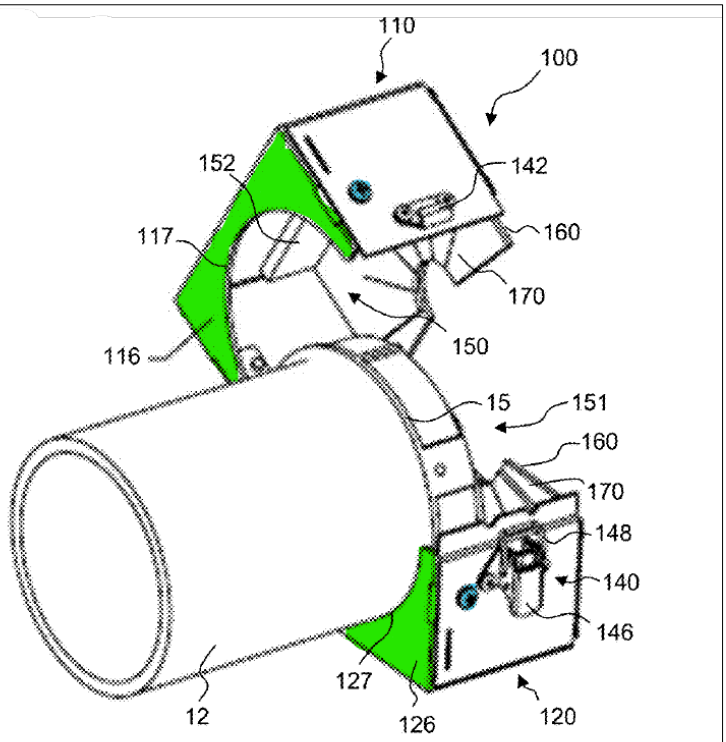
110
100
152
142
117
160
170
116
150
15
151
148
140
146
127
126
12
120

Fig. 11

Dictionary definitions also support STI's construction. For example, "panel" means "a section of something (as a wall or door) . . ." The Merriam-Webster Dictionary (2016) (Ex. 4) at 520. The same dictionary defines "section" as "a distinct part." *Id.* at 651. Thus, front and rear panels are front and rear parts (or layers) that are physically distinct from other components of the housing, as STI's construction proposes. Jones Decl. (Ex. 5) ¶42.

Hilti's construction is overly narrow and attempts to limit the claims to one disclosed embodiment. For example, there is no discussion in the specification that limits the installation of the claimed firestopping apparatus such that it cannot be installed with the front and rear panels on different sides of a wall. Jones Decl. (Ex. 5) ¶43. Accordingly, Hilti's construction should be rejected. *Supra* at 149, n.29.

b. Hilti's Answering Position

This term appears in claim 1 of the '868 patent, which recites "a housing having a wall surface extending between opposed front and rear panels with an inner chamber defined therein." '868 patent at 6:55-57. Based on STI's disclaimer during prosecution, the Court should construe this term to mean "front and rear panels configured to be installed on the same side of the wall."

During prosecution, the examiner rejected claim 1 in view of, *inter alia*, Reinhardt (US Patent Application Publication No. 2014/0318064). Ex. 13 at 53-54.

Reinhardt depicted front and rear panels installed on ***opposite*** sides of a wall, as shown below.

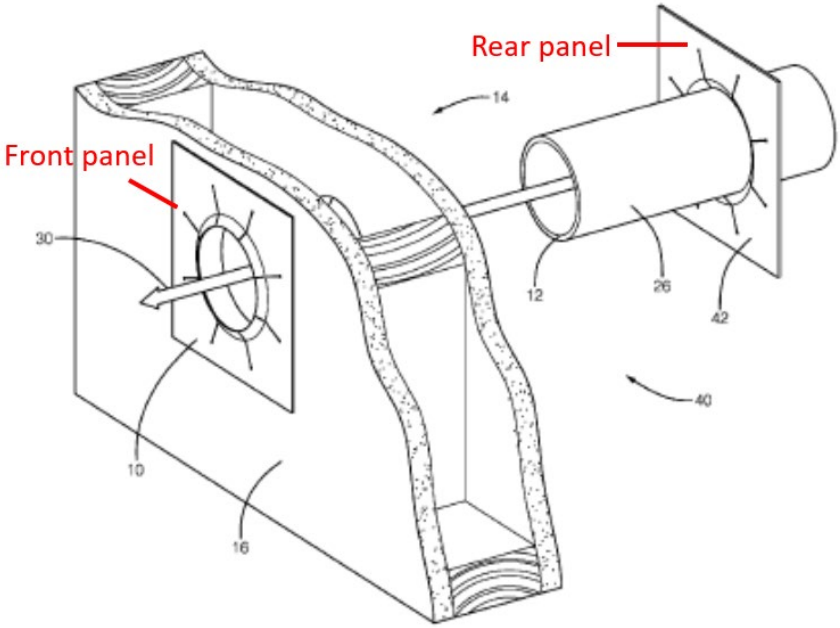

Ex. 17, Fig. 1 (annotated).

In response to the examiner's rejection, STI argued:

> Applicant respectfully submits that ***Reinhardt does not teach front and rear panels on a housing <u>as claimed</u>***. To the contrary, as illustrated in Fig. 2 thereof, ***Reinhardt teaches the panels 10 and 42 on opposite sides of the wall***.

Ex. 13 at 40.

This is a clear and unmistakable disclaimer of a device that has panels on opposite sides of the wall. Ex. 20, ¶¶67-70. Indeed, during his deposition, Jones admitted:

> Q. The second section there says, "Applicant respectfully submits that Reinhardt does not teach front and rear panels on the housing as

claimed. To the contrary, as illustrated on Figure 2 thereof, Reinhardt teaches panels on 10 and 42 on opposite sides of the wall."

Q. Do you see that?

A. Yes, I do.

Q. And do you understand the applicant to be arguing there that Reinhardt is different than that claimed because the panels are on opposite sides of the wall?

A. That's what it says.

Ex. 6 at 142:7-143:19. The Court should construe this claim to effectuate STI's clear disclaimer.

c. STI's Reply Position

Contrary to Hilti's assertion, the Applicant did not make "a clear and unmistakable disclaimer of a device that has panels on opposite sides of the wall." *Supra* at 204. Thus, Hilti's construction finds no support in the prosecution history—the only source Hilti relies on in support of its incorrect construction.

Hilti relies on the following arguments made in an Office Action response distinguishing the claims from Reinhardt: "Applicant respectfully submits that Reinhardt does not teach front and rear panels on a housing as claimed. To the contrary, as illustrated in Fig. 2 thereof, Reinhardt teaches the panels 10 and 42 on opposite sides of the wall." Ex. 13 at 40. Reinhardt discloses "press-on retainer[s]" 10 and 42 that are installed on opposite sides of a wall. Notably, the Reinhardt device ***has no housing.*** Rather, Reinhardt's press-on retainers (panels) are installed

directly onto ***firestop sleeves***. *See* Reinhardt (Ex. 17) at Abstract ("A press-on retainer is configured to retain a fire-stop sleeve in an opening."); *id.* at 0013 ("FIG. 1 illustrates a non-limiting example of a press-on retainer, hereafter the retainer 10, prior to being installed onto a fire-stop sleeve, hereafter the sleeve 12. . . . [T]he second retainer 42 is shown already pressed onto the sleeve 12 prior to inserting the sleeve into a wall 16. . . . "); *see* Reinhardt Fig. 1:

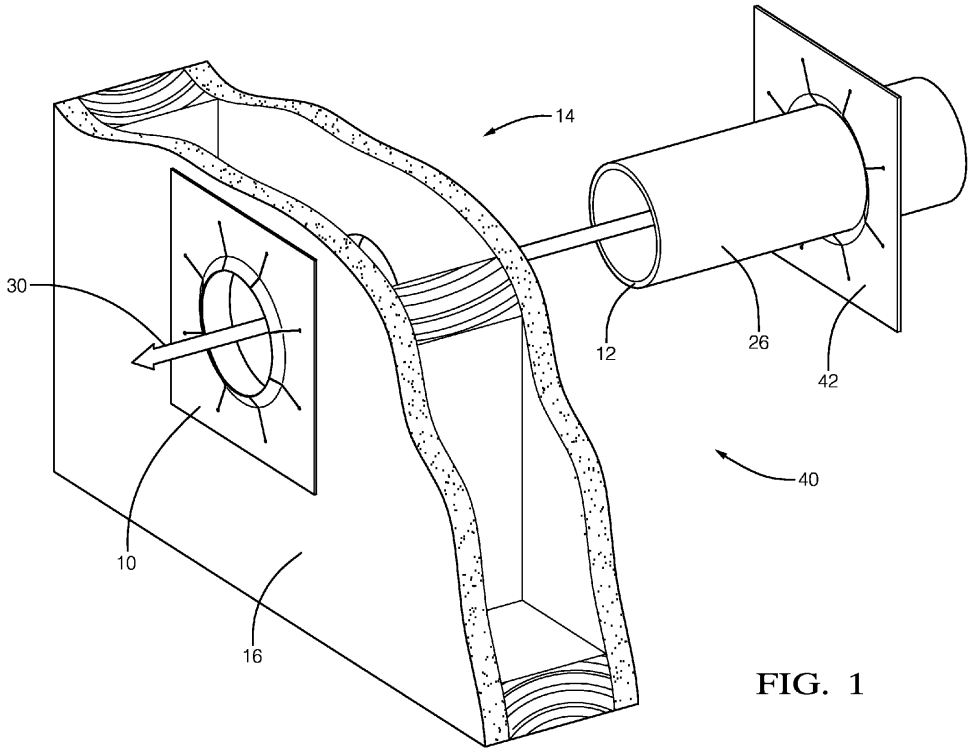

FIG. 1

To be sure, a firestop sleeve is not the claimed "housing." The '868 patent, for example, clearly explains that the housing is something entirely different from a sleeve; the housing of the '868 patent's device can be positioned about the sleeve.

See '868 patent at 4:50-58 ("Referring to FIGS 10-13, an exemplary application of the firestopping apparatus 100 to a sleeve 12 will be described. . . . The ***housing*** 102 is positioned ***about the sleeve*** 12 with the sleeve 12 seated within the semi-circular opening 127 of the rear panel 126."); *id.* at Fig. 12:

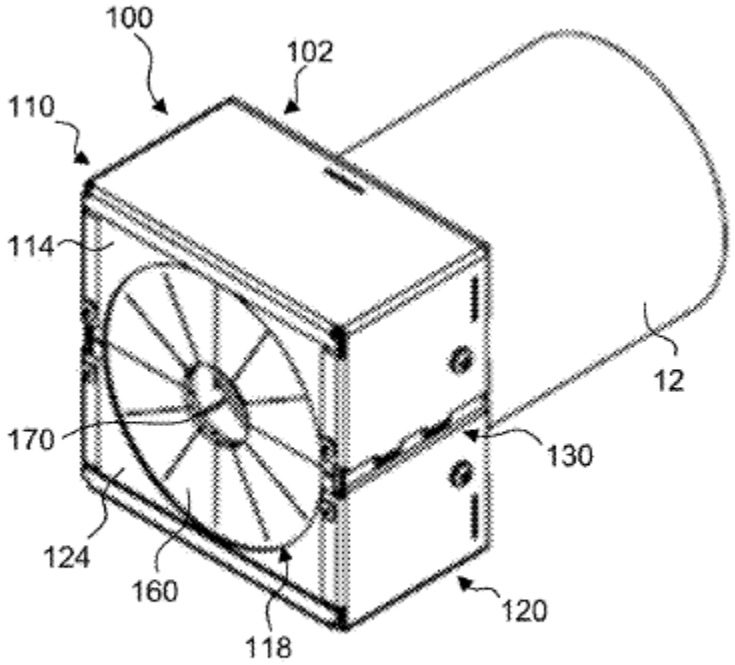

Fig. 12

In its response distinguishing Reinhardt from the rejected claim, the Applicant explained that "Reinhardt does not teach front and rear panels **<u>on a housing</u>** as claimed." Ex. 13 at 40. Hilti spins this argument into a disclaimer of all devices with front and rear panels installed on opposite sides of the wall. But that is plainly not

what the Applicant did. Rather, the Applicant simply distinguished Reinhardt on the basis that it does not disclose "front and rear panels **on a housing**."

The second sentence of the Applicant's response ("To the contrary, as illustrated in Fig. 2 thereof, Reinhardt teaches the panels 10 and 42 on opposite sides of the wall.") provides further explanation related to Reinhardt's specific design. Ex. 13 at 40. Reinhardt's retainers are not panels on a housing that can be installed as a unit. Instead, Reinhardt's product would require the installer to install one press-on retainer on one side of the wall, then walk around to the other side of the wall to install the other retainer. Accordingly, as the Applicant explained, Reinhardt's retainers are not panels ***on a housing***. The Applicant simply pointed this out. Indeed, the Applicant never argued that the claimed front and rear panels must be on the same side of the wall. For these reasons, the prosecution history does not support Hilti's argument that the Applicant disclaimed devices having panels on opposite sides of the wall. *See K-fee System GmbH v. Nespresso USA, Inc.*, 89 F.4th 915, 923-24 (Fed. Cir. 2023) ("We conclude that [the prior art] was distinguished not through any clear disavowal of claim scope, but because it was never within the scope of the claim."). The Court should reject Hilti's strained and unsupported construction and adopt STI's construction.

d. Hilti's Sur-Reply Position

STI attempts to escape its clear and unambiguous disclaimer by arguing that in its Office Action response, it really meant to say that the prior art Reinhardt reference does not include a housing. But that is not what STI argued:

> Applicant respectfully submits that **Reinhardt does not teach front and rear panels on a housing as claimed**. To the contrary, as illustrated in Fig. 2 thereof, **Reinhardt teaches the panels 10 and 42 on opposite sides of the wall**.

Ex. 13 at 40.

If STI wanted to argue that Reinhardt did not disclose a housing, it could have just said so. But it did not—because the Examiner did not cite Reinhardt as teaching "a housing." Instead, the Examiner cited Reinhardt as teaching that "it was old and well-known in the art to utilize such front and rear apertured panels[.]" *Id*. at 54. In response to that finding, STI argued (*supra* at 205-206) that Reinhardt did not teach front and rear panels "as claimed" because "Reinhardt teaches the panels 10 and 42 on opposite sides of the wall." Ex. 13 at 40. STI's argument clearly and unmistakably limited "front and rear panels" to cover only devices with front and rear panels on the same side of the wall.

5. "Panel(s)" (claim 1, 9)

STI	Hilti
No construction necessary. To the extent the term is construed, it should be construed as its plain meaning or alternatively, "layer that is physically	This term should be construed according to its plain and ordinary meaning, which includes both a panel

distinct from other components of the housing."	that is physically distinct from and/or integrally connected to the housing. If this term is not construed according to its plain and ordinary meaning, it should be construed as Hilti proposes based on the intrinsic record.

a. STI's Opening Position

This term does not need construction. The claims do not recite the term "panel" in isolation. Instead, the claims refer to either front or rear panels. Accordingly, the term "panel," as used in the claims, only refers to one of the front or rear panels, and to the extent any construction is needed, "front panel" and "rear panel" are the terms that should be construed. Thus, there is no need to construe "panel" on its own. *Supra* section III.C.4. Accordingly, to the extent "panel" is construed, that construction must be consistent with the construction of "front and rear panels." *Supra* section III.C.4.

Alternatively, if the Court decides to construe "panels," it should adopt STI's construction: "layer that is physically distinct from other components of the housing." STI's construction is consistent with the specification. *Supra* section III.C.4; Jones Decl. (Ex. 5) ¶44-45.

By contrast, Hilti attempts to broaden the claim by conflating terms and construing them outside of the greater context of the claim. As explained above, the term "panel" cannot be properly construed when divorced from the rest of the claim.

The specification additionally describes "side panels" that are separate and distinct from the front and rear panels. Hilti's construction of panel that "includes both a panel that is physically distinct from and/or ***integrally connected to the housing***" improperly imports the specification's disclosure related to side panels. The specification does not describe a "front panel" or "rear panel" that is "integrally connected to the housing," nor is "integrally connected to the housing" recited in the claim. *See* Jones Decl. (Ex. 5) ¶46. Hilti's construction should be rejected. *Supra* at 120, n.16.

b. Hilti's Answering Position

As discussed above, claim 1 recites "front and rear panels" while claim 9 recites a "front panel" (without a "rear panel").[44] STI argues (*supra* at 209-210) that the term needs no construction and that "[t]o the extent the term is construed, it should be as its plain meaning." STI then confusingly provides an "alternative construction" in which a "panel" is a "layer that that is physically distinct from other components of the housing." Hilti agrees that the term should take its plain meaning, but the parties' dispute whether that plain meaning includes panels that are

[44] The terms "panel" or "panels" should be construed to mean the same thing in claims 1 and 9 and are appropriately construed together. "Panel(s)" should be construed separately from "front and rear panels" because STI's disclaimer raises an issue for claim 1, which is not present in claim 9.

physically separate pieces of a device as well as panels that are fully integral to the device. Ex. 20, ¶71.

The specification reveals that Hilti's position is the correct one because the specification uses the term "panels" in its ordinary sense to refer to "panels" that are both integral to the housing as well as "panels" that are separate components compared to other parts of the housing:

> In the illustrated embodiment, the first housing member 110 includes an end surface 111 and side ***panels*** 112, 113 extending between a front ***panel*** 114 and a rear ***panel*** 116. Similarly, the second housing member 120 includes an end surface 121 and side ***panels*** 122, 123 extending between a front ***panel*** 124 and a rear ***panel*** 126. Each of the front ***panels*** 114, 124 includes a semi-circular opening 115, 125 such that when the housing members 110, 120 are in an assembled condition as illustrated in FIGS. 3-9, a front opening 118 is defined in the housing 102. Similarly, each of the rear ***panels*** 116, 126 includes a semi-circular opening 117, 127 such that when the housing members 110, 120 are in an assembled condition, a rear opening 119 is defined in the housing 102.

'868 patent at 3:34-49.

There is no dispute that the "side panels" are integral to the housing, whereas the front and rear panels are physically separate components as compared to the rest of the housing. Yet, the '868 patent calls all three structures "panels" consistent with the plain meaning of "panel," which includes separate as well as integral pieces. Ex. 20, ¶73. As Jones admitted:

> Q. And so a panel is a layer that is physically distinct from other components of the housing?

A. In – in the – in the case of the front panel, yes.

Q. What about in the case of the side panel?

A. The side panel, as I interpret from the drawing and specification, can be part of [the] housing, but not completely separate.

Q. But it's still a panel even though it's not completely separate?

A. Well, it's called a panel.

Ex. 6 at 137:1-12, 138:15-22. Indeed, there is nothing in the '868 patent to suggest that STI accorded a special definition to "front panel" and "rear panel" that requires a physically separate "panel" and precludes a "panel" that is fully integral to the housing. *Id*. at 137:10-12; Ex. 20, ¶73.

In an attempt to justify its "alternative" construction, STI cites (*supra* at 203) to a dictionary definition of "panel" as meaning "a section of something (as a wall or door)." But that definition actually supports Hilti's articulation of the plain meaning of the term "panel" because door "panels" most often are physically integrated into doors. During his deposition, Jones attempted to explain how STI's dictionary definition of panel supported the notion that the plain meaning precludes integrated panels:

Q. But a door panel, is that a physically distinct part of a door?

A. Yes, I would say so.

Q. How?

A. Well, I'm looking at a door with the door panels. I could take the door panels out and so, therefore, they would be a physically distinct part that I could put back in there and have a panel, take it out and not have a panel. So yes, they're physically distinct.

Ex. 6 at 164:4-15.

The door referenced by Jones is shown in the below-picture:

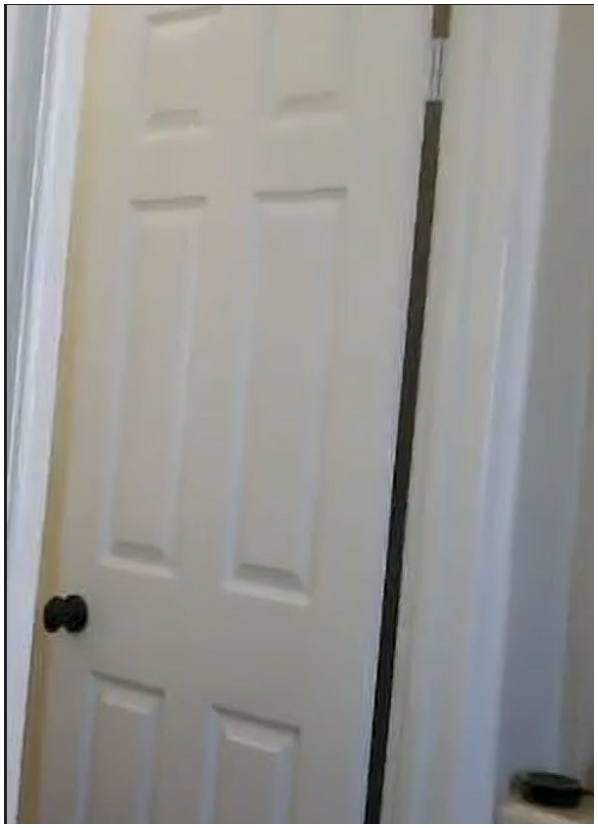

Ex. 18; Ex. 6 at 164:17-166:11, 168:8-16.

As shown, and contrary to Jones' testimony, the panels are not a physically separate piece of the door. Instead, the panels are fully integrated into the door consistent with the plain meaning of "panel(s)" (which includes, but does not require, integrally connected panels). Dr. Jones was then asked how the panels in

his door could be considered physically separate and removable and he testified they could be removed with a saw:

> Q. Okay. And so I think you said you could remove the panels from the door. How would you do that?
>
> A. Oh I was. Yeah, I would take a saw and cut them out?
>
> Q. Okay. So they are integrated into the door, right?
>
> A. Yeah, you know, it is what it is. I – I've told you what it is. You can see what it is. And, you know, the – that answers – that's my – that's my answer.

Ex. 6 at 166:17-167:8. Jones is correct that "[y]ou can see what it is." And "what it is" is a fully integrated panel encompassed within the ordinary meaning of the term.

STI also relies (*supra* at 210-211) on a definition of "section" (because STI's definition of "panel" refers to a "panel" as a "section of something") to argue that the plain meaning of "panel" requires a "physically distinct" component. Here again, the dictionary supports Hilti, not STI. The dictionary does not say a "*physically* distinct part." It just requires a "distinct part," which can be physically distinct or integrated. For example, the "side panel" of the '868 patent's preferred embodiment is a "distinct" part of the device and at the same time is fully integrated into the housing.

There is simply no basis for STI's argument—attempted to avoid anticipatory prior art references—that the plain meaning of panel requires a physically separate

panel and precludes a fully integrated panel.[45] Perhaps in view of that fact, Jones ultimately equivocated on whether the term "panel" as used in the '868 patent claims would encompass a panel that is fully integrated into the housing:

> Q. So you are importing the embodiments into the claim?
>
> A. No, I -- you asked me a question of how would somebody know that the front panel is a -- is a distinctly different piece than the side panel and I would say that the embodiments in the specification show examples of that.
>
> Q. Right. Examples. But they're not limiting examples, are they?
>
> A. The claim language does not limit it, that's my understanding.
>
> Q. So, in other words, the -- the claim would cover a panel that is physically separate as compared to the rest of the housing, as well as one that is integrated into the housing?
>
> A. Again, I -- I would have to see an example and the context in which it's used to be able to answer that question.
>
> Q. So you don't know whether the claim covers -- Claim 1 covers a front panel that is physically separate from the rest of the housing, as well as a front panel that is fully integrated into the rest of the housing?
>
> A. Yeah, as I sit here right now without looking at a specific example, I cannot give you an answer to that question.

Ex. 6 at 139:14-140:22. The Court should adopt Hilti's construction.

---

[45] STI's "alternative" construction is also incorrect because the intrinsic record nowhere refers to panels as a layer of a device, and a panel need not be a layer of a device. A panel is just a panel.

c. STI's Reply Position

Hilti offers no sound justification for construing "panel(s)" separately from "front and rear panels." Indeed, Hilti itself accurately described this term when it declared: "[a] panel is just a panel." *Supra* at 216 n.45. STI agrees; this term does not need to be construed.

Hilti's proposal to construe "panel(s)"—divorced from its context within the claims—runs afoul of the well-settled principle that "claims are not construed in a vacuum, but rather in the context of the intrinsic evidence, *viz.,* the other claims, the specification, and the prosecution history." *Jansen v. Rexall Sundown, Inc.*, 342 F.3d 1329, 1333 (Fed. Cir. 2003). Here, "panel" should not be separately construed without the context of "front" or "rear" because the claims recite only "front" or "rear" panels, not "panels" alone. The specification also does not broadly refer to "panels"; it refers to front, rear, or side panels in specific contexts that mean different things. Hilti's protracted discussion of door panels illustrates precisely why "panels" should not be construed in isolation: door panels are entirely irrelevant to construing the claim terms "front and rear panels," and are outside of the context, meaning and scope of the '868 patent.[46]

[46] Indeed, STI objected to Hilti's questioning of Dr. Jones regarding door panels on the grounds that it is outside the scope of his expert opinion. *See* Ex. 6, 164:8-9; 164:23-24; 166:21-22; 167:3-4; 167:23-24.

Further, Hilti's statement that "[t]here is no dispute that 'side panels' are integral to the housing, whereas the front and rear panels are physically separate components as compared to the rest of the housing" (*supra* at 212)—with which STI agrees—underscores why "panel(s)" should not be construed as a standalone term, divorced from the context of "front and rear panels." The specification's discussion of "side panels" is simply not germane to the construction of "front and rear panels" (or "panel(s)," for that matter) because none of the claims requires a "side panel." The claims require only front and rear panels. Construing "panel(s)" in isolation is unnecessary, unhelpful and will be confusing to the jury.

Moreover, Hilti's footnote 44 (*supra* at 211) is inapposite because there is no disclaimer related to "front and rear panels," as explained above.

d. Hilti's Sur-Reply Position

In an attempt to avoid Jones' complete lapse in credibility (*supra* at 213-216), STI argues (*supra* at 217) that "door panels are entirely irrelevant to construing the term" panels. But STI and Jones both cited to a dictionary definition of "panel" as meaning "a section of something (as a wall or door)" as support for STI's argument that a panel does not include an integral structure. *Supra* at 202. STI cannot argue

its own dictionary definition is now "irrelevant" because it does not like its expert's testimony.

STI also takes (*supra* at 218) the remarkable position that "[t]he specification's discussion of 'side ***panels***' is simply not germane to the construction of 'front and rear ***panels***.'" STI's request that the Court selectively ignore the use of the term "panels" in certain portions of the specification in construing the phrase "panels" reveals the fundamental weakness in STI's position.

Dated: March 15, 2024

YOUNG CONAWAY STARGATT & TAYLOR, LLP

/s/ Alexis N. Stombaugh
Pilar G. Kraman (No. 5199)
Alexis N. Stombaugh (No. 6702)
Colin A. Keith (No. 7074)
Rodney Square
1000 North King Street
Wilmington, DE 19801
(302) 571-6600
pkraman@ycst.com
astombaugh@ycst.com
ckeith@ycst.com

W. Cook Alciati
GARDELLA GRACE P.A.
80 M Street SE, 1st Floor
Washington, D.C. 20003
(703) 721-8379
calciati@gardellagrace.com

Michael A. Dorfman

FOX ROTHSCHILD LLP

/s/ Austen C. Endersby
Austen C. Endersby (No. 5161)
1201 N. Market Street, Suite 1200
Wilmington, DE 19801
- and -
2020 K Street, Suite 500
Washington, D.C. 20006
aendersby@foxrothschild.com

Jeff E. Schwartz
FOX ROTHSCHILD LLP
2020 K Street, N.W., Suite 500
Washington, D.C. 20006
JESchwartz@FoxRothschild.com

Howard S. Suh
FOX ROTHSCHILD LLP
101 Park Avenue, 17th Floor
New York, New York 10178
HSuh@foxrothschild.com

GARDELLA GRACE P.A.
2502 North Clark Street, Suite 222
Chicago, IL 60614
(773) 755-4942
mdorfman@gardellagrace.com

Attorneys for Hilti Aktiengesellschaft

Paul W. Kalish
FOX ROTHSCHILD LLP
Princeton Pike Corporate Center
997 Lenox Drive
Lawrenceville, New Jersey 08648
PKalish@FoxRothschild.com

Attorneys for Specified Technologies Inc.