US 20100154894A1

(19) United States

(12) Patent Application Publication

(10) Pub. No.: US 2010/0154894 A1

(43) Pub. Date: Jun. 24, 2010

Kotapish et al.

(54) HYDRAULIC UNLOADING VALVE

(75) Inventors: **Edward C. Kotapish**, Willow Park, TX (US); **Mark D. Matzner**, Burleson, TX (US)

Correspondence Address:
BRACEWELL & GIULIANI LLP
P.O. BOX 61389
HOUSTON, TX 77208-1389 (US)

(73) Assignee: **Weir SPM, Inc.**, Fort Worth, TX (US)

(21) Appl. No.: **12/642,541**

(22) Filed: **Dec. 18, 2009**

Related U.S. Application Data

(60) Provisional application No. 61/138,795, filed on Dec. 18, 2008.

Publication Classification

(51) **Int. Cl.**
F16K 15/02 (2006.01)

(52) **U.S. Cl.** **137/14**; 137/528

(57) **ABSTRACT**

A pressure relief system for a reciprocating pumping system that deintensifies pressure from the pumping system and controls relief operation with the deintensified pressure. The relief system includes a relief valve connected to the pumping system and a control system that selectively opens the relief valve when an overpressure is sensed in the pumping system. To keep the relief valve in a closed position, the control system maintains a backpressure on the relief valve using the deintensified pressure. A dump valve in the control system selectively vents the backpressure so the relief valve can open. A charging system can be used for charging the control system and for reseating the relief valve.

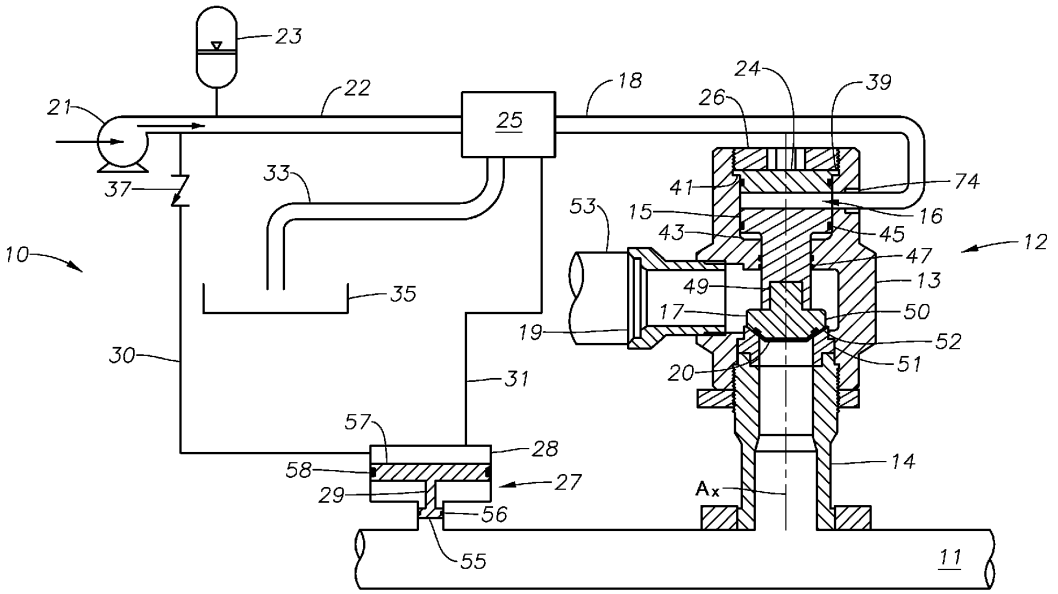

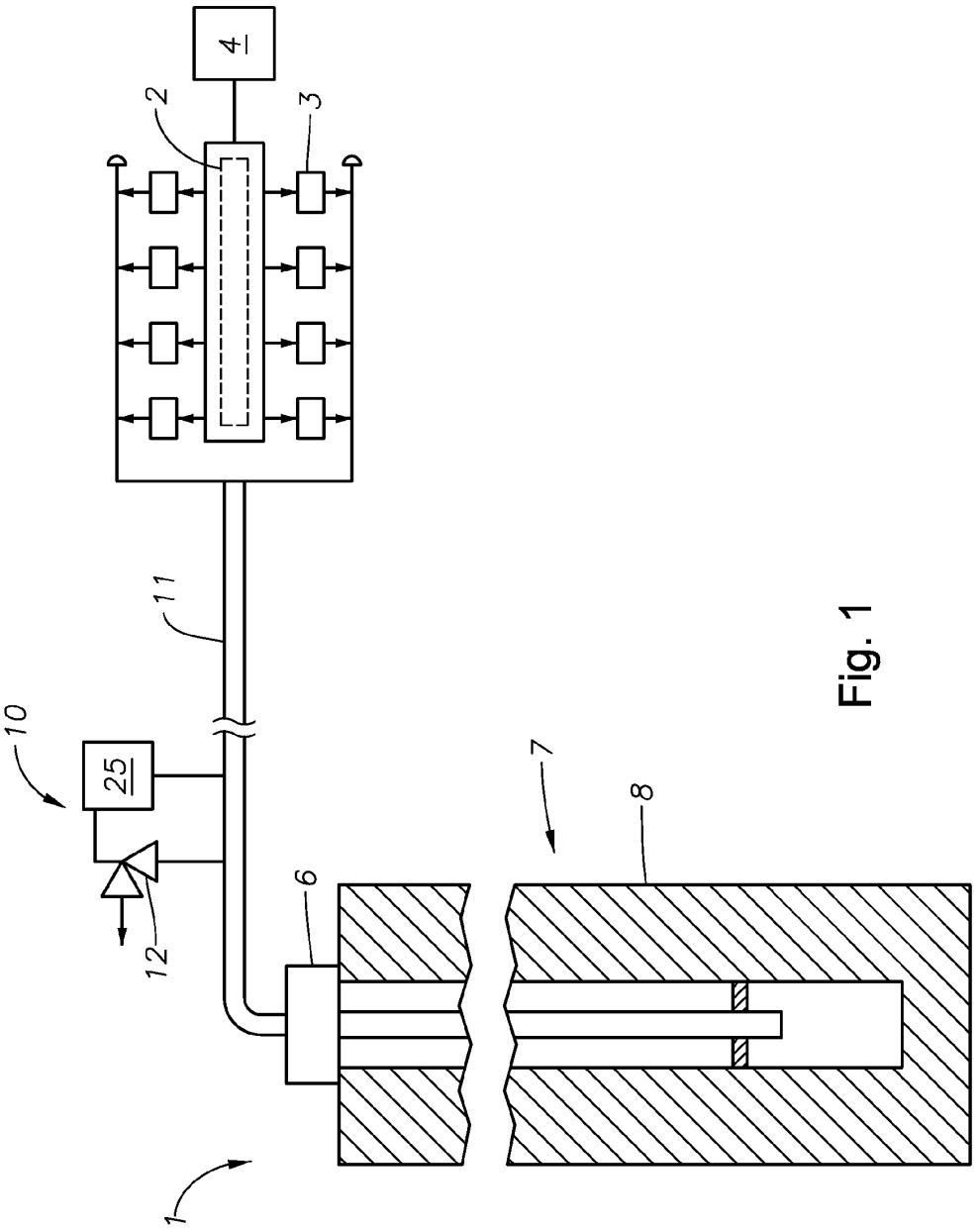

Fig. 1

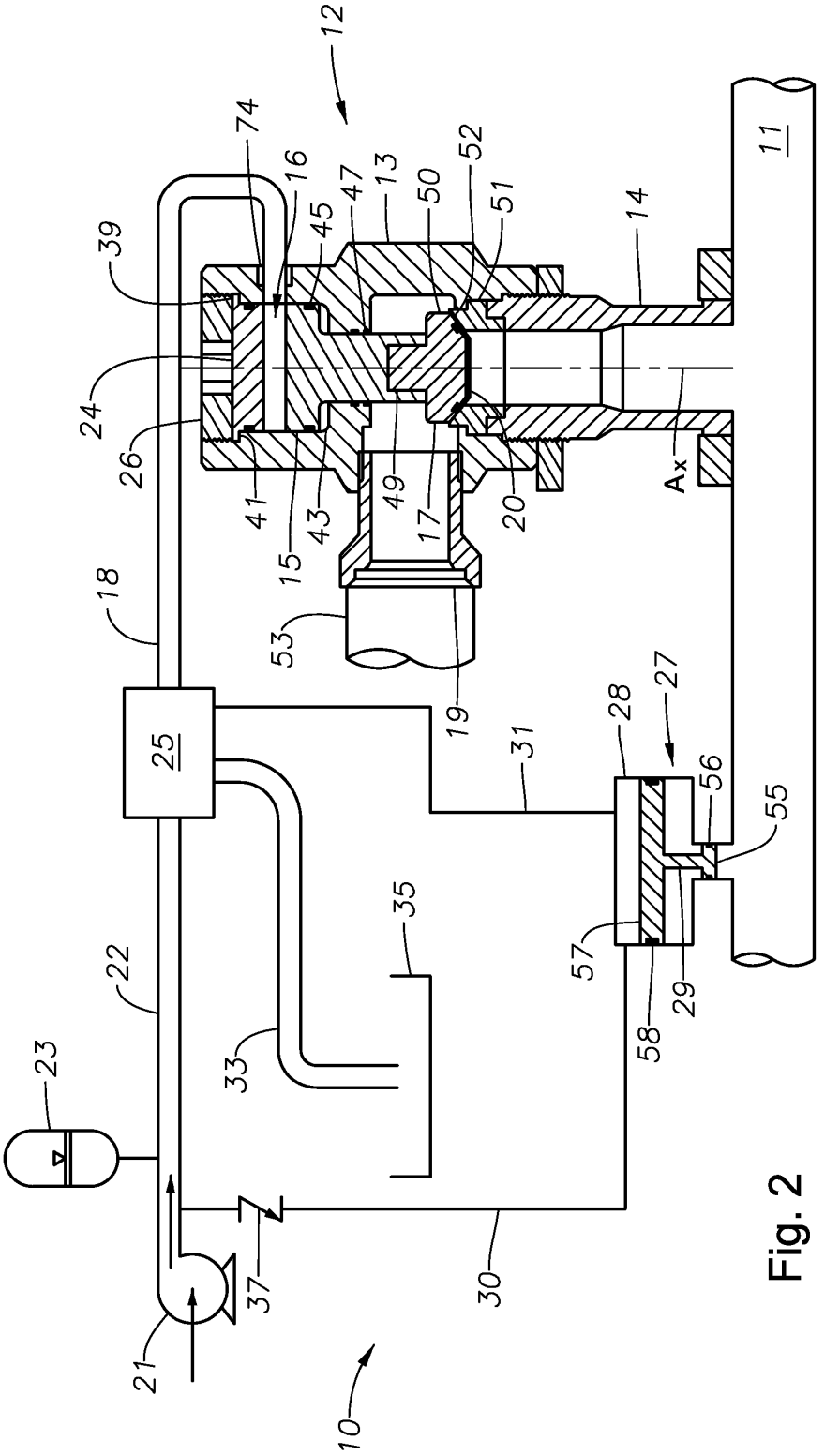
12
74
16
39
45
47
13
50
52
51
14
11
24
26
41
15
43
49
17
20
Ax
18
53
19
25
31
28
27
56
55
35
22
57
29
58
33
23
37
30
21
10

Fig. 2

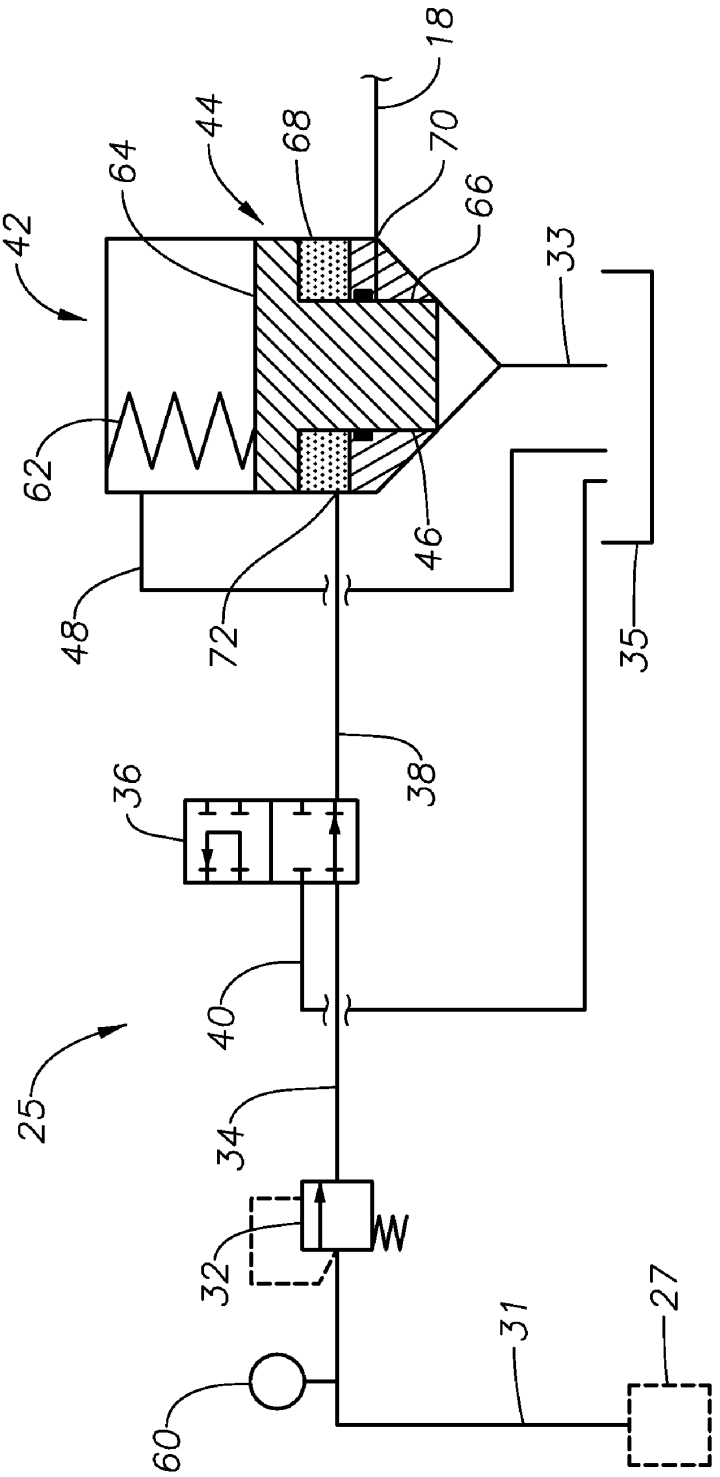

Fig. 3

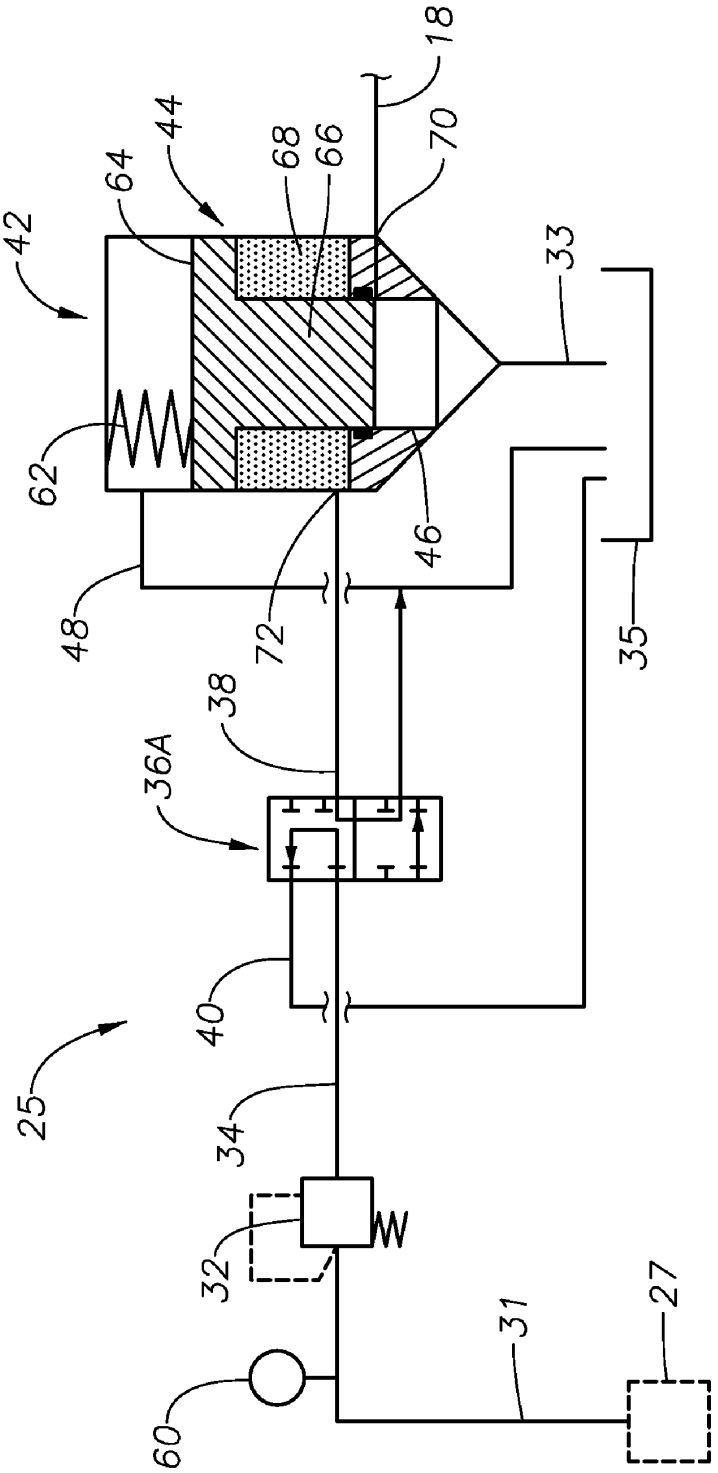

Fig. 4

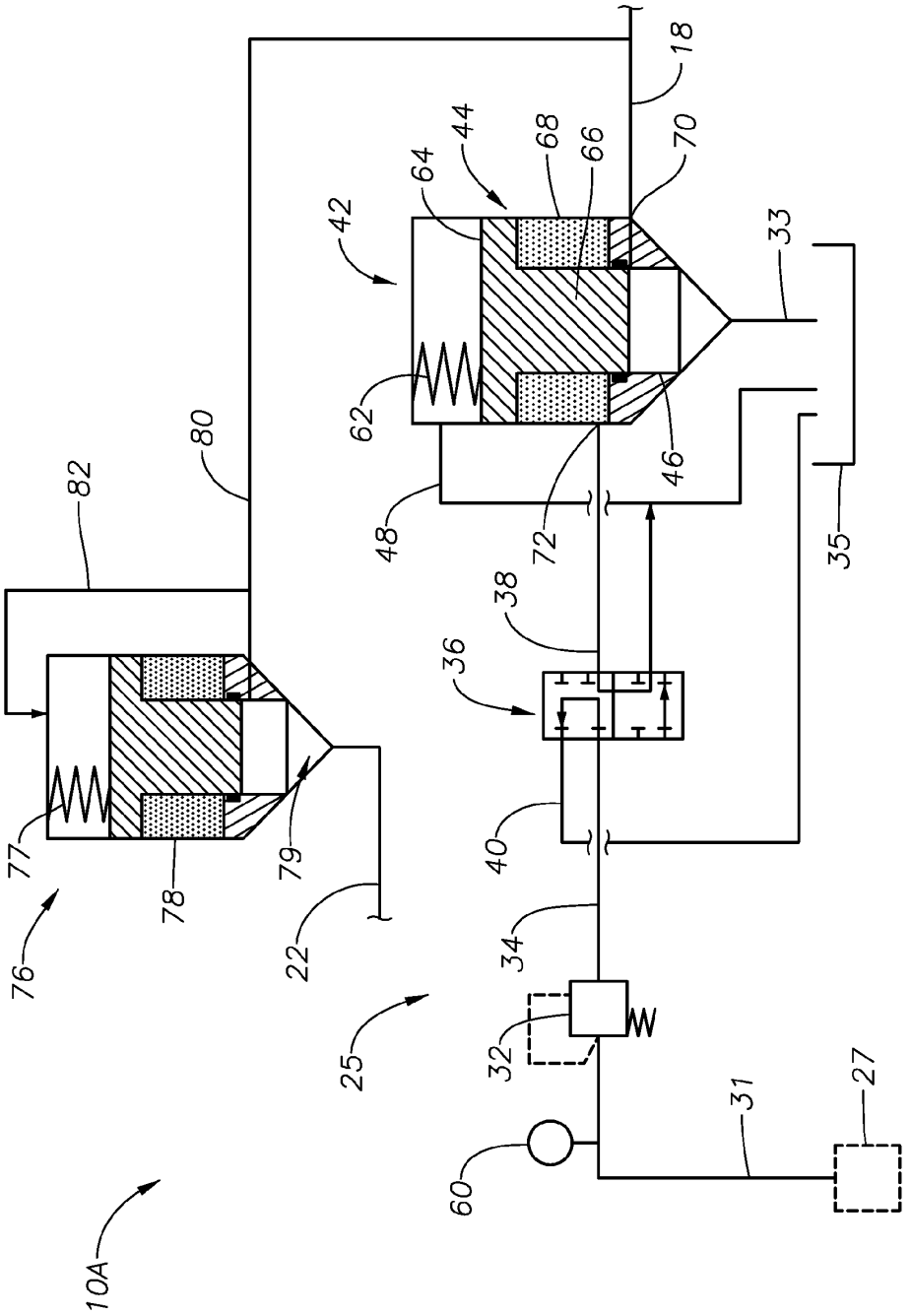
10A
76
77
78
79
22
25
82
80
42
64
44
68
66
70
18
62
48
72
46
33
35
38
36
40
34
32
60
31
27

Fig. 5

HYDRAULIC UNLOADING VALVE

CROSS REFERENCE TO RELATED APPLICATIONS

[0001] This application claims priority to and the benefit of co-pending U.S. Provisional Application Ser. No. 61/138,795, filed Dec. 18, 2008, the full disclosure of which is hereby incorporated by reference herein.

FIELD OF THE INVENTION

[0002] The present invention relates in general to valves and in particular to an improved pressure relief valve that relieves a pressure of a system. The relieving set pressure is maintained by a dedicated hydraulic circuit.

DESCRIPTION OF RELATED ART

[0003] In oil field operations, reciprocating pumps are often used for various purposes. Some reciprocating pumps, generally known as "service pumps," typically pump service fluids used for downhole operations such as cementing, acidizing, or fracing a well. These service pumps may typically operate for relatively short periods of time, but on a frequent basis such as several times a week. Often they are mounted to a truck or a skid for transport to various well sites.

[0004] Pressure within the pump discharge circuit may unexpectedly increase, due to a line blockage, excess heating, or other reason. Pressure relief systems can be included with the discharge circuit for relieving unacceptable pressure buildup in the discharge circuit. The pressure relief system generally includes a valve having a side in fluid communication with the discharge circuit, and another side in fluid communication with a relief circuit. Opening the relief valve vents the discharge circuit to the relief thereby allowing the overpressured circuit to vent before damaged by overpressure. The relief valve can open directly in response to overpressure, one example is where a prestressed spring seats the valve until a discharge circuit reaches a set pressure. Optionally, sensors can monitor pressure, and when an unacceptable high pressure is sensed, a signal sent to a controller may actuate the valve open enabling the discharge circuit to relieve.

SUMMARY OF THE INVENTION

[0005] Disclosed herein is an example of a method of relieving pressure from a pumping circuit that includes providing a relief valve that has a body, an axial passage in the body, a discharge port formed in the body in fluid communication with a portion of the passage, and a piston axially moveable within the passage and having a high pressure end a low pressure end on a side opposite the high pressure end. The method of, this example may further include providing fluid communication between the pumping circuit and the high pressure end of the piston, urging the piston into a closed position by maintaining a backpressure on the low pressure side of the piston so that the high pressure side of the piston seats into a closed position to block fluid communication between the pumping circuit and the discharge port, providing a selectively openable dump valve in pressure communication with the low pressure side of the piston, and opening the dump valve, when the pressure in the pumping circuit reaches a set point, by communicating to the dump valve a fraction of the pumping circuit pressure, so that the backpressure on the piston vents through the dump valve, the pumping circuit pressure unseats the piston, and fluid in the pumping circuit flows into the relief valve and out the discharge port.

[0006] Also disclosed herein is a pressure relief system for use with a pumping circuit. In one example the pressure relief system includes a relief valve, a body, an axial passage in the body, a discharge port formed in the body in fluid communication with a portion of the passage, a piston axially moveable within the passage and having a high pressure end in pressure communication with the pumping circuit and a low pressure end on a side opposite the high pressure end, and a back pressure space within the portion of the passage between the low pressure end of the piston and the body. The pressure relief system also may include a control system operating at a pressure that is a fraction of the pumping circuit operating pressure and having a selectively openable dump valve in a flow path between the back pressure space and a vent.

[0007] In yet another example, disclosed herein is a relief valve for a pumping circuit, the relief valve can include a body, an inlet port, a backpressure space in the body, a high pressure surface having a cross sectional area in pressure communication with the pumping circuit, a low pressure surface having a cross sectional area that is greater than the cross sectional area of the high pressure surface and in pressure communication with the backpressure space, a coupling between the high pressure surface and the low pressure surface, so that when the pumping circuit is operating, the backpressure space is at a pressure having a value at least the value of the pumping circuit pressure multiplied by the ratio of a quotient of the high pressure surface cross sectional area divided by the low pressure surface cross sectional area, a resultant force within the coupling urges the high pressure surface into sealing engagement with the inlet port to block flow from the pumping circuit into the relief valve.

BRIEF DESCRIPTION OF THE DRAWINGS

[0008] Some of the features and benefits of the present disclosure having been stated, others will become apparent as the description proceeds when taken in conjunction with the accompanying drawings, in which:

[0009] FIG. **1** is a side schematic view of a subterranean fracturing system in the process of fracturing a well.

[0010] FIG. **2** is a side partial sectional view of a relieving system.

[0011] FIG. **3** is an example of a control system for use with the relieving system of FIG. **2**.

[0012] FIG. **4** illustrates the control system of FIG. **3** in an alternate configuration.

[0013] FIG. **5** illustrates the control system of FIG. **4** in an alternate configuration.

[0014] While the subject device and method will be described in connection with the preferred embodiments but not limited thereto. On the contrary, it is intended to cover all alternatives, modifications, and equivalents, as may be included within the spirit and scope of the present disclosure as defined by the appended claims.

DETAILED DESCRIPTION OF THE INVENTION

[0015] The method and system of the present disclosure will now be described more fully hereinafter with reference to the accompanying drawings in which embodiments are shown. The described method and system may be in many different forms and should not be construed as limited to the illustrated embodiments set forth herein; rather, these

embodiments are provided so that this disclosure will be thorough and complete, and will fully convey its scope to those skilled in the art. Like numbers refer to like elements throughout.

[0016] FIG. **1** is schematic partial sectional view illustrating an example of a fracing system **1** delivering high pressure fluid into a subterranean formation. Example uses of the fluid include fracturing a formation, treating the well, or cementing casing. The system **1** includes a manifold **2** connected to pumps **3** that pressurize fluid for delivery to the subterranean formation. The pumps **3** each have a suction line shown drawing a fluid from a reservoir **4**. The reservoir **4** may include injection ports (not shown) for additive injection, such as a proppant, to the fluid. The pumps **3** discharge into a discharge line **11** shown extending to wellhead assembly **6**. After delivering fluid to the wellhead **6**, the fluid can be ported into the wellbore **7** as well as the formation **8**. A pressure relief system **10** is provided on the discharge line **11** to prevent over-pressuring of the discharge line **11**. In the embodiment shown, the pressure relief system **10** includes a relief valve **12** connected to the discharge line **11**, and a control system **25** also connected to the discharge line **11** and to the relief valve **12**. Examples of maximum operating pressure in the discharge line can include around 5,000 pounds per square inch, about 15,000 pounds per square inch, and values between. While blockage in the line **5** or within the wellbore **7** can cause over pressure, the inherent nature of the fracturing fluids and its constituents therein can also cause pressure excursions in the system **1** that can exceed a maximum desired pressure.

[0017] With reference now to FIG. **2**, a side partial sectional schematic of a relieving system **10** for use in high pressure fluid is shown. In this embodiment, discharge line **11** is shown with an attached relief valve **12**. As noted above, the discharge line **11** may include a pressurized fracturing fluid from a pump, such as from one or more of the pumps **3** in FIG. **1**. The relief valve **12** illustrated includes a valve body **13** with an attached annular inlet **14**. The annular inlet **14** is shown threaded within the valve body **13** on one end, and the other end of the inlet **14** is shown flangedly connected to the discharge line **11**. An annular seating collar **51** is provided on the end of the inlet **14** projecting within the valve body **13**. The inlet **14** is ported along an axis A_x of the valve **12** and in open fluid communication with the discharge line **11**; thereby providing fluid communication between the valve body **13** and the discharge line **11**. A passage **16** is shown formed through the valve body **13** oriented along the axis A_x. A disk **24** is coaxially set in the passage **16** distal from the inlet **14**. A lip **39** extends radially from an end of the disk **24** and is shown resting on a shoulder **41** formed within the valve body **13** where the passage **16** extends radially outward.

[0018] A piston **15** shown provided within the passage **16** and axially moveable therein. The passage **16** radius reduces at a transition **43** shown in the valve body **13** between the disk **24** and the inlet **14**. A portion of the piston **15** has a radius that is correspondingly reduced so that the reduced portion of the piston **15** is axially moveable within the passage **16** below the transition **43**. A seal **45** is shown disposed on the outer circumference of the piston **15** and on its larger diameter portion. Seals **47** are also illustrated along the inner surface of the passage **16** below the transition **43**. The seals **45**, **47** can form a pressure barrier between the piston **15** and the passage **16** to prevent pressure communication along the length of the piston **15**. An annular relief port **19** is shown threadingly attached to the valve body **13** between the inlet **14** and the shoulder **43**. An open space through the relief port **19** provides communication from a portion of the passage **16** to outside of the valve body **13**. The pressure barrier provided by the seals **45**, **47** isolates the open space in the relief port **19** from the portion of the passage **16** above the piston **15**.

[0019] A valve element **17** is shown depending from the end of the piston **15** distal from the disk **24**. In the embodiment of FIG. **2**, the valve element **17** includes a head portion **50** with a smaller diameter stem portion **49** projecting from the head portion **50**. The valve element **17** is attached to the piston **15** by insertion of the stem portion **49** into the lower end of the piston **15**. The head portion **50** is shown having a seating surface **20** on its side opposite where the stem portion **49**. The side of the head portion **50** having the seating surface **20** is shown beveled along its outer periphery. In the example of FIG. **2**, the valve element **17** is shown in sealing contact with the seating collar **51** and blocking fluid flow through the inlet **14** and into the valve body **13**. The beveled portion of the seating surface **20** is shown sealingly mating with a correspondingly beveled surface **52** provided where the seating collar **41** opens into the valve body **13**.

[0020] A control line **18** is shown in fluid communication with the portion of the passage **16** through a backpressure port **74** formed through the valve body **13** between the disk **24** and piston **15**. The control line **18** further communicates to a control system **25**. As will be described in further detail below, the control system **25** maintains a particular back pressure on the upper end of the piston **15** so that the valve **12** sustains a substantially precise discharge pressure. Preferably, cross sectional area of the side of the piston **15** facing the disk **24** exceeds the cross sectional area of the seating element **20**. The area differential on opposing sides of the piston **15** and valve element **17** assembly produces a resultant force urging the seating element **20** against the seating collar **51**; this can occur even when pressure in the discharge line **11** exceeds pressure in the portion of the passage **16** above the piston **15**. The area differential thus can provide for lower pressures in the control line **18** and the control system **25**, which maintaining the valve element **17** in a seated configuration. One advantage of lowering pressure requirements in the control system **25** and its associated hardware, is that smaller and less expensive control elements may be used.

[0021] In one example of use, the control system **25** maintains a pressure in the control line **18** and the portion of the passage **16** above the piston **15** of sufficient magnitude so that a resultant force is formed urging the valve element **17** into sealing engagement with the seating collar **51**. In one example however, the pressure maintained by the control system **25** is maintained at a value so that if the discharge line **11** pressure exceeds a set relieving pressure, the valve element **17** will unseat. Examples of set relieving pressures include up to about 5,000 pounds per square inch (psi), up to about 7,500 psi, up to about 10,000 psi, up to about 15,000 psi, and values therebetween. When the force applied on the valve element **17** from the fluid pressure in the discharge line **11** exceeds the force applied on the piston **15** from the fluid pressure in the control line **18**, the direction of the resultant force will reverse thereby sliding the valve element **17** and piston **15** will upwards away from the inlet **14**. Moving the valve element **17** away from the inlet **14** unseats the seating element **20** from the seating collar **51** to open fluid communication between the inlet **14** and the relief port **19**. The outlet port **19** is shown connected to an optional drain line **53**, so that

any relieving flow from the discharge line **11** exiting the relief port **19** may be directed to desired collection site (not shown).

[0022] A sensing unit **27** is shown attached to and in fluid communication with the discharge line **11**. In one example, the sensing unit **27** is disposed proximate the relief valve **12**. The sensing unit **27** as shown includes an outer housing **28** having an end in fluid communication with the discharge line **11** and another end in fluid communication with the control system **25**. A differential piston **29** is illustrated within the housing **28** having a high pressure head **55** on one end and a low pressure head **57** on an opposite end. The high pressure head **55** is shown having a cross sectional area less than the cross sectional area of the low pressure head **57**. The inner circumference of the housing **28** is sized to substantially match the outer profiles of both the high and low pressure heads **55**, **57** and to maintain a sealing surface between the housing **28** and outer profiles of the high and low pressure heads **55**, **57** with movement of the piston **29** axially within the housing **28**. Seals **56**, **58** are shown respectfully provided on the outer peripheries of the high and low pressure heads **55**, **57**.

[0023] A surface of the high pressure head **55** is shown facing and in pressure communication with the discharge line **11**. An oppositely facing surface on the low pressure head **57** is in pressure communication with the control system **25** via a sensing line **31** shown connecting the housing **28** and control system **25**. As noted above, the disparate cross sectional areas of the high and low pressure heads **55**, **57** define an area ratio between the high and low pressure heads **55**, **57**. The area ratio requires the pressure in the discharge line **11** exceed the pressure on the low pressure head **57** by a factor substantially equal to the area ratio.

[0024] The control system **25** includes a discharge or drain line **33** communicating the control system **25** to a drain **35**. The control system **25** may be hydraulically pressurized by a pump **21** shown having a discharges coupled with a charging line **22**. The charging line **22** extends from the discharge of the pump **21** and connects to the control system **25**. An accumulator **23** may optionally be included that is in pressure and/or fluid communication with the charging line **22**. In one example of use, the pump **21** pressurizes a fluid that is discharged into the charging line **22** and flows to the control system **25**. An example fluid pressurized by the pump **21** includes hydraulic fluid, incompressible liquids, and other liquids. The accumulator **23** is illustrated as a closed container with a space therein in which a volume of fluid can be stored. Some of the fluid being discharged into the charging line **22** may be diverted into the accumulator **23** and stored therein. A resilient member (not shown) can be disposed in the head space of the accumulator **23**. The resilient member can be a compressed gas, such as air, nitrogen, helium, and the like. Alternatively, a compressible bladder, a seal with a spring, or a sealed foam member can be used as the resilient member. Thus fluid from the pump **21** that is stored in the accumulator **23** can be maintained under pressure for a period of time. A line **30** also connects to the charging line **22** shown branching to the housing **28**. A check valve **37** may be provided in the line **30** to prevent backflow from the housing **28** to the charging line **22**. Thus any fluid urged from the housing is diverted to the control system **25**.

[0025] The pump **21** can operate until pressure in the lines **22**, **30**, accumulator **23**, and control system **25** is at a predetermined pressure. This value can vary depending on design parameters of devices in communication with the pump **21**, but can be determined by those skilled in the art without undue experimentation. In one example of use, the pump **21** will charge the system to a pressure relating to the maximum pressure allowable in the discharge line **11** and the area ratio between the cross sectional area of the upper surface of the piston **15** and cross sectional area of the sealing element **20**. Optionally, the area ratio of the high and low pressure heads **55**, **57** can be correlated to the maximum allowable pressure in the discharge line **11**. Alternatively, both area ratios can dictate the charging pressure of the pump **21**. Once charging is complete, the pump **21** can be deactivated. Pressurizing and sealing fluid in the charging line **22**, accumulator **23**, and control system **25** creates a pressurized system. In the event of some leakage in the system, pressure stored in the accumulator **23** can maintain a backpressure in the lines **22**, **30** and control system **25**.

[0026] The pressure in the discharge line **11** can be monitored by measuring fluid pressure in line **30**, line **31**, or the control system **25** and multiplying the measured pressure by the area ratio of the high and lower pressure heads **55**, **57**. Depending upon the desired set or maximum pressure in the discharge line **11**, the control system **25** is configurable to actuate the relieve valve **12** upon sensing an established pressure via the sensing line **31**. In one example, when the pressure for relieving is detected in the sensing lines **30**, **31** by the control system **25**, the control system **25** can provide fluid communication between the pressure line **18** and discharge line **33**. The discharge line **33** vents to atmosphere and thus is at ambient pressure; fluid in the portion of the passage **16** above the piston **15** is maintained at some pressure above ambient, and in some instances well above ambient. Thus fluid in passage **16** above the piston **15** will readily enter the pressure line when the control system **25** communicates the pressure line **18** to the discharge line **33**. Evacuating fluid from above the piston **15** removes the force for urging the valve element **17** downward. When the downward force on the valve element **17** is removed, pressure in the discharge line **11** unseats the seating element **20** from the seating collar **51** to allow fluid communication between the inlet **14** and relief port **19**. As fluid in the discharge line **11** flows through the inlet **14**, past the valve element **17**, and out the relief port **19**, it can be routed to a designated location via the drain line **53**. Directing the flow from the discharge line **11** and through the drain line **53** depressurizes the discharge line **11**.

[0027] In FIG. **3**, one example of a control system **25** is shown in a schematic view. In this embodiment, a sequence valve **32** is provided in line with the sensing line **31**. The sequence valve **32** may be selectively adjustable to open at a pre-determined pressure at the side in fluid communication with the sensing unit **27** (shown in phantom view). A pressure indicator **60** may be used in conjunction with the sequence valve **32** to establish the opening pressure. The embodiment of the control system **25** of FIG. **3** also includes a selector valve **36**. The selector valve **36** is selectively moveable between different positions that in turn selectively directs flow across the selector valve **36**, then to a particular destination depending on the position of the selector valve **36**. Further illustrated in the embodiment of FIG. **3**, a line **34** connects between the side of the sequence valve **32** opposite the sensing unit **27** with the selector valve **36**. A control line **38** is provided shown connected to an activation port **72** formed in a side of the selector valve opposite line **34** and extending into connection with a counter balance valve **42**. The counter balance valve **42** illustrated in FIG. **3** includes a piston **44** that

includes a flanged portion **64** with a reduced diameter body portion **66** projecting downward. The body portion **66** of the piston **44** is shown inserted into a cylinder **46**. An annular space **68** is illustrated provided within the counter balance valve **42** that circumscribes the piston **44** in the space adjacent where the body portion **66** joins the flanged portion **64**. A spring **62** provides a force to urge the piston **44** downward to maintain the body portion **66** within the cylinder **46**. The upper surface of the piston **44** shown facing the spring **62** is in pressure communication with the drain **35** via a drain line **48**. Thus the spring **62** and weight of the piston **44** are the only forces that need to be overcome to lift the piston **44**.

[0028] Further illustrated in this example, the pressure line **18** connects to a return port **70** formed through a side of the counter balance valve **42**; the discharge line **33** connects to a location on the lower end of the counter balance valve **42**. As shown, when the reduced diameter portion of the piston **44** is inserted within the cylinder **46**, fluid communication between the pressure line **18** and the discharge line **33** is blocked by the body portion **66**. Thus in the embodiment of FIG. **3**, the counter balance valve **42** is in a closed configuration.

[0029] For the non-limiting purpose of illustration herein, the position of the sequence valve **32** depicted in FIG. **3** is referred to as the normal operating position. When in the normal operating position, flow from the sensing unit **27** and passing through the sequence valve **32**, is directed through the selector valve **36**, through the control line **38**, and to the counter-balance valve **42**. If the fluid from the sensing unit **27** in the line **31** exceeds the pre-determined pressure selected in the sequence valve **32**, the sequence valve **32** will open. When the sequence valve **32** is open, pressure and/or flow in the sensing unit **27** can communicate through the sequence valve **32** and selector valve **36** into the counter-balance valve **42** and to the annular space **68**. When the force exerted onto the piston **44** from pressure in the control line **38** exceeds the weight of the piston **44** and the force applied by the spring **62**, the piston **44** is moved upward thereby removing the body portion **66** from its pressure blocking position between the pressure line **18** and discharge line **33**. Communicating the pressure line **18** with the discharge line **33** provides an outlet for fluid in the pressure line **18** and above the piston **15**. Thus fluid within the valve body **13** above the piston **15** exits, to form a pressure imbalance across the piston **15** and allowing it to be urged upward towards the disk **24** by the higher pressure discharge fluid **11**. As discussed above, this positions the relief valve **12** in a relieving configuration to allow fluid from the discharge line **11** to enter the drain line **53**.

[0030] The pressure from the discharge line **11** on the differential piston **29** decreases as the discharge line **11** flow is relieved. The relief valve **12** can remain in the open position and can be reset by repositioning the piston **44** to block flow between the pressure line **18** and the discharge line **33**. Shown in FIG. **4** is an example of resetting the counter balance valve **42**. In this example the selector valve **36**A configuration is switched so that line **34** communicates with drain line **40** through the selector valve **36**A. In addition to resetting the counter balance valve **42**, this configuration of the selector valve **36**A could be used when recharging the control circuit **25**. This diverts the flow from the sensing unit **27** that provides the force for lifting the piston **44**. Optionally, fluid in the annular space **68** is directed to the drain line **48**, via the selector valve **36**, so the body portion **66** of the piston **44** can reinsert into the cylinder **46** and block communication between the pressure line **18** and the discharge line **33**. An advantage of the presently disclosed system is the selector valve **36** can require manual actuation before the relief valve **12** can be reset into operational mode. Thus in an embodiment, the relief valve **12** does not automatically reseat. Optionally, a relief valve (not shown) can be included in the charging line **22** to prevent the pump **21** from overpressuring this line or the components in this line. Moreover, in another alternative embodiment, a bleed valve can be included in one of line **31** or line **34** for venting of excess hydraulic fluid or other fluid in the lines **31**, **34**.

[0031] In one example of use, the piston **15** has a 3-to-1 surface area ratio between its upper end and the valve element **17**. Therefore, in situations where it is desired to have a set pressure at around 15,000 pounds per square inch, continuously maintaining pressure in the passage **16** above the piston **15** at 5,000 pounds per square inch can provide an adequate seating pressure. In one example, the side of the piston **15** and or differential piston **29** in fluid communication with the discharge line **11** is about one third that of the piston side in communication with the control system **25**. Optionally, the sequence valve **32** may be adjusted so the valve **12** opens at a pressure in the discharge line **11** at or below 15,000 pounds per square inch. It is within the capabilities of those skilled in the art to determine a sequence valve **32** setting that causes the valve **12** to open at a particular pressure.

[0032] Referring now to FIG. **5**, an alternate embodiment of a pressure relieving system **10**A is illustrated in a side schematic view. Further included in this embodiment is a flow control valve **76** shown having a port connected to the charging line **22** and to a control line **80**. The control line **80** is illustrated branching from pressure line **18**, and thus is in fluid and pressure communication with the space **16**. A piston **78** is shown provided within the flow control valve **76** that is selectively moved axially within the flow control valve **76** for blocking/enabling fluid communication between the charging line **22** and the control line **80**. In the example of FIG. **5**, the piston **78** is moved upward and out of the flow path **79** between the charging line **22** and the control line **80**, thus allowing fluid from the charging line **22** to flow through the flow control valve **76**, the control line **80**, and space **16**. A backpressure line **82** represents pressure communication from the control line **80** to above the piston **78** for maintaining the piston **78** in a closed position. When the pressure line **18** is pressurized and not being vented to the discharge line **33**, the pressure on the piston **78** applied through backpressure line **82** urges the piston **78** into a closed position. However, after the pressure and/or fluid in the pressure line **18** is evacuated, and fluid flow from the pump **21** and charging line **22** is applied to the flow control valve **76**, the piston **78** can be urged upward to open the valve and allow flow therethrough. Pressure drops through the flow control valve **76** and disparate cross sectional areas above and below the piston **78** results in a resultant upward force on the piston **78** when fluid flows from the charging line **22** to the control line **80**. An optional spring **77** is shown above the piston **78** for providing a downward urging force onto the piston **78** which can be used to close the flow control valve **76**, such as when no flow and/or pressure is applied to the flow control valve **76**.

[0033] While the invention has been shown in only one of its forms, it should be apparent to those skilled in the art that it is not so limited, but is susceptible to various changes without departing from the scope of the invention.

What is claimed is:

1. A method of relieving pressure from a pumping circuit comprising:

providing a relief valve comprising:

a body,

an axial passage in the body,

a discharge port formed in the body in fluid communication with a portion of the passage, and

a piston axially moveable within the passage and having a high pressure end a low pressure end on a side opposite the high pressure end; and

providing fluid communication between the pumping circuit and the high pressure end of the piston;

urging the piston into a closed position by maintaining a backpressure on the low pressure side of the piston so that the high pressure side of the piston seats into a closed position to block fluid communication between the pumping circuit and the discharge port;

providing a selectively openable dump valve in pressure communication with the low pressure side of the piston; and

opening the dump valve, when the pressure in the pumping circuit reaches a set point, by communicating to the dump valve a fraction of the pumping circuit pressure, so that the backpressure on the piston vents through the dump valve, the pumping circuit pressure unseats the piston, and fluid in the pumping circuit flows into the relief valve and out the discharge port.

2. The method of claim **1**, wherein communicating a fraction of the pumping circuit pressure comprises communicating pressure from the pumping circuit to a high pressure surface that produces a resulting force, transferring the resulting force to a low pressure surface having a cross sectional area greater than the cross sectional area of the high pressure surface, and communicating the low pressure surface with a circuit fluid thereby creating a fraction of the pumping circuit pressure in the circuit fluid.

3. The method of claim **2**, wherein the ratio between the fraction of the pumping circuit pressure and the pumping circuit pressure is substantially the same as the ratio of the cross sectional area of the high pressure surface and the cross sectional area of the low pressure surface.

4. The method of claim **1**, wherein the ratio of the respective cross sectional areas of the high pressure end of the piston and low pressure end of the piston is substantially the same as the ratio of the cross sectional area of the high pressure end and the cross sectional area of the low pressure end.

5. The method of claim **1**, further comprising closing the dump valve by isolating the dump valve from pressure communication with the fraction of the pumping circuit pressure.

6. The method of claim **1**, wherein the fraction of the pumping circuit pressure is communicated from the pumping circuit to the dump valve through a hydraulic circuit.

7. The method of claim **1**, further comprising closing the dump valve and restoring a backpressure on the low pressure side of the piston so that the high pressure side of the piston reseats into a closed position to block fluid communication between the pumping circuit and the discharge port.

8. A pressure relief system for use with a pumping circuit comprising:

a relief valve comprising:

a body,

an axial passage in the body,

a discharge port formed in the body in fluid communication with a portion of the passage,

a piston axially moveable within the passage and having a high pressure end in pressure communication with the pumping circuit and a low pressure end on a side opposite the high pressure end, and

a back pressure space within the portion of the passage between the low pressure end of the piston and the body; and

a control system operating at a pressure that is a fraction of the pumping circuit operating pressure and having a selectively openable dump valve in a flow path between the back pressure space and a vent.

9. The pressure relief system of claim **8**, wherein the dump valve comprises a discharge to the vent, a return port in fluid communication with the low pressure end of the piston, an activation port in selective pressure communication with a fraction of the pumping circuit pressure, so that when the dump valve is in pressure communication with a fraction of the pumping circuit pressure, the dump valve moves from a blocking position with the low pressure end of the piston isolated from the low pressure discharge into an open position with the lower pressure end of the piston in fluid communication with the low pressure discharge.

10. The pressure relief system of claim **8**, wherein the control system further comprises a pressure regulator having an outlet in selective pressure communication with the dump valve, and having an inlet that is in pressure communication with the fraction of the pumping circuit pressure, so that when the pumping circuit pressure reaches a set point, the pressure regulator is changeable from a closed position with the inlet isolated from the outlet, to an open position, with the inlet and outlet in pressure communication.

11. The pressure relief system of claim **8**, further comprising a sensing unit having a port in pressure communication with the pumping circuit and a reduced pressure port having a pressure that is at the fraction of the pumping circuit and in pressure communication with the control system.

12. The pressure relief system of claim **11**, the sensing unit having a housing, a piston in the housing, a high pressure surface on an end of the piston in pressure communication with the pumping circuit, a reduced pressure surface on an end of the piston in pressure communication with the reduced pressure port.

13. The pressure relief system of claim **8**, further comprising a hydraulic charging system comprising a pump, a circuit in fluid communication with the pump, the sensing unit, and the control system, so that when the pump is operated, fluid is introduced into the circuit and control system that can communicate the fraction of the pumping circuit pressure to the dump valve.

14. The pressure relief system of claim **8**, further comprising a hydraulic charging system in fluid communication with the control system and the control system further comprising a selector valve having a relieving configuration in which the dump valve is in pressure communication with the fraction of pumping circuit pressure and a recharging configuration in which the dump valve is isolated from pressure communication with the fraction of pumping circuit pressure.

15. The pressure relief system of claim **8**, further comprising a flow control check valve having an inlet port in fluid communication with a hydraulic charging system having fluid and an outlet port in fluid communication with the back pressure space, so that when the flow control check valve is

opened, fluid in the hydraulic charging system is directed to the back pressure space and reseats the high pressure end of the piston to block flow from the pumping circuit into the relief valve.

16. A relief valve for a pumping circuit comprising:

a body,

an inlet port

a backpressure space in the body;

a high pressure surface having a cross sectional area in pressure communication with the pumping circuit;

a low pressure surface having a cross sectional area that is greater than the cross sectional area of the high pressure surface and in pressure communication with the backpressure space;

a coupling between the high pressure surface and the low pressure surface, so that when the pumping circuit is operating, the backpressure space is at a pressure having a value at least the value of the pumping circuit pressure multiplied by the ratio of a quotient of the high pressure surface cross sectional area divided by the low pressure surface cross sectional area, a resultant force within the coupling urges the high pressure surface into sealing engagement with the inlet port to block flow from the pumping circuit into the relief valve.

17. The relief valve of claim **16**, further comprising a backpressure port formed through body and in fluid communication with the backpressure space and adapted for connection to a control system that is in pressure communication with a fraction of the pumping circuit pressure that is substantially the same as the pressure in the backpressure space.

18. The relief valve of claim **17**, wherein the control system is in pressure communication with a sensing unit that comprises a port in pressure communication with the pumping circuit and a reduced pressure port having a pressure that is at the fraction of the pumping circuit and in pressure communication with the control system, a housing, a piston in the housing, a high pressure surface on an end of the piston in pressure communication with the pumping circuit, and a reduced pressure surface on an end of the piston in pressure communication with the reduced pressure port.

* * * * *