US006796321B2

(12) **United States Patent**
Vicars

(10) **Patent No.: US 6,796,321 B2**
(45) **Date of Patent: Sep. 28, 2004**

(54) **PRESSURE RELIEF VALVE**

(75) Inventor: **Berton L. Vicars**, Odessa, TX (US)

(73) Assignee: **Garnder Denver, Inc.**, Quincy, IL (US)

(*) Notice: Subject to any disclaimer, the term of this patent is extended or adjusted under 35 U.S.C. 154(b) by 147 days.

(21) Appl. No.: **10/173,669**

(22) Filed: **Jun. 19, 2002**

(65) **Prior Publication Data**

US 2003/0234049 A1 Dec. 25, 2003

(51) **Int. Cl.**[7] **F16K 17/14**
(52) **U.S. Cl.** **137/70**; 137/467; 137/512.1
(58) **Field of Search** 137/70, 467, 512.1, 137/540, 843, 903

(56) **References Cited**

U.S. PATENT DOCUMENTS

661,603 A * 11/1900 Gold 137/903
2,143,399 A * 1/1939 Abercrombie 137/540
2,587,933 A 3/1952 Volpin
3,443,572 A 5/1969 Laviene, Jr. et al.
4,286,662 A 9/1981 Page, Jr.
4,551,077 A 11/1985 Pacht
4,787,409 A * 11/1988 Taylor 137/70
4,896,689 A * 1/1990 Taylor 137/70
4,930,536 A 6/1990 Taylor
5,362,215 A 11/1994 King
5,794,915 A * 8/1998 Shimizu et al. 137/540
5,924,853 A 7/1999 Pacht
6,129,116 A * 10/2000 Laskowski 251/127
6,155,284 A 12/2000 Scantlin

* cited by examiner

Primary Examiner—John Rivell
(74) *Attorney, Agent, or Firm*—James B. Conte; Barnes & Thornburg

(57) **ABSTRACT**

A pressure relief valve including a valve seat and a valve seat retainer abutting the valve seat. The valve seat has a central channel whereas the valve seat retainer has a number of peripheral channels. A deformable plug is positioned between the valve seat and the valve seat retainer. The deformable plug has a head abutting the valve seat and normally blocking the central channel and a tail abutting the valve seat retainer at a location between the peripheral channels. The tail deforms upon receiving a predetermined load from the head thereby permitting the head to unblock the central channel and open the pressure relief valve.

8 Claims, 3 Drawing Sheets

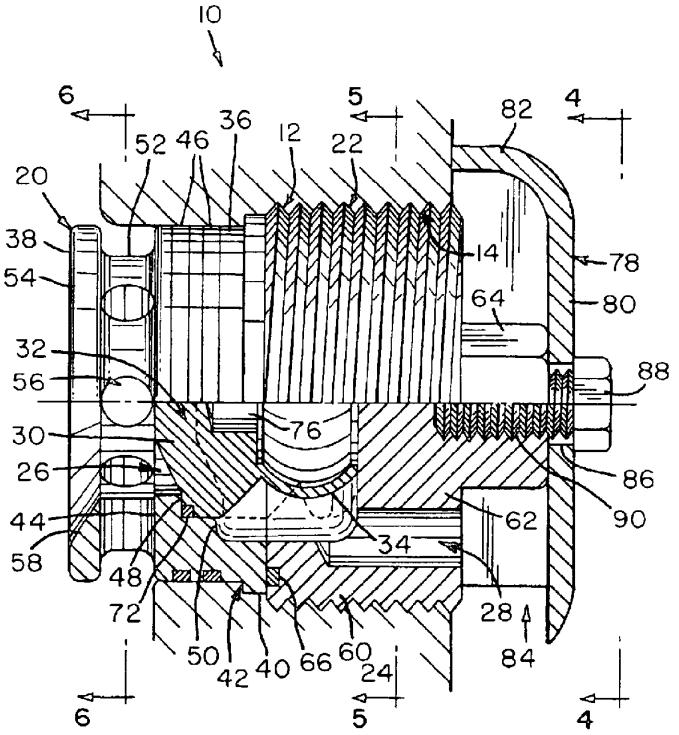

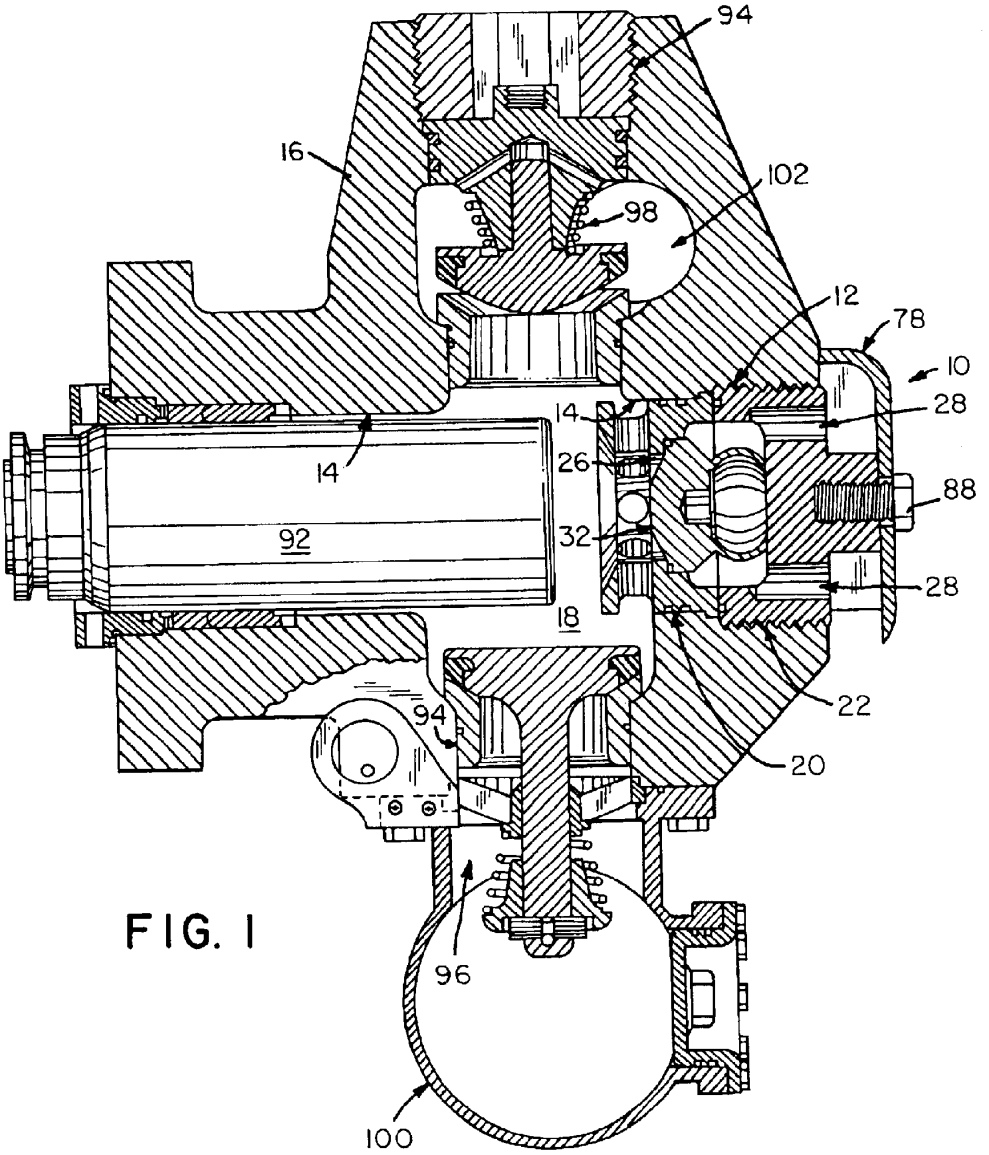

FIG. 1

FIG. 2

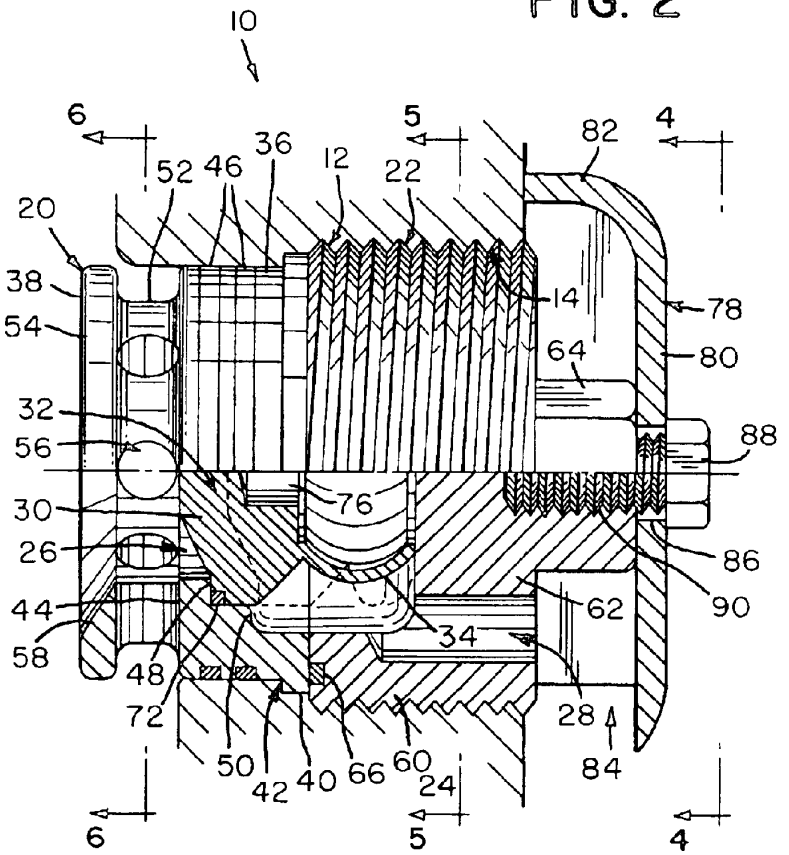
10
6
5
4
82
36
12
22
52
46
20
38
54
14
78
64
80
32
56
88
76
30
26
86
90
44
62
58
34
48
72
28
84
50
42
40
66
60
24
6
5
4

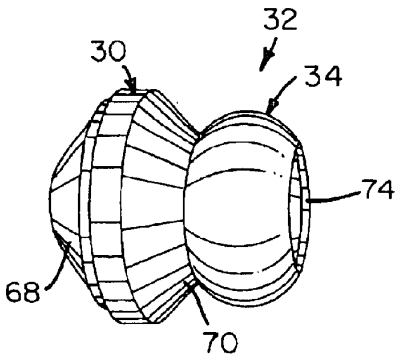
32
30
34
74
68
70

FIG. 3

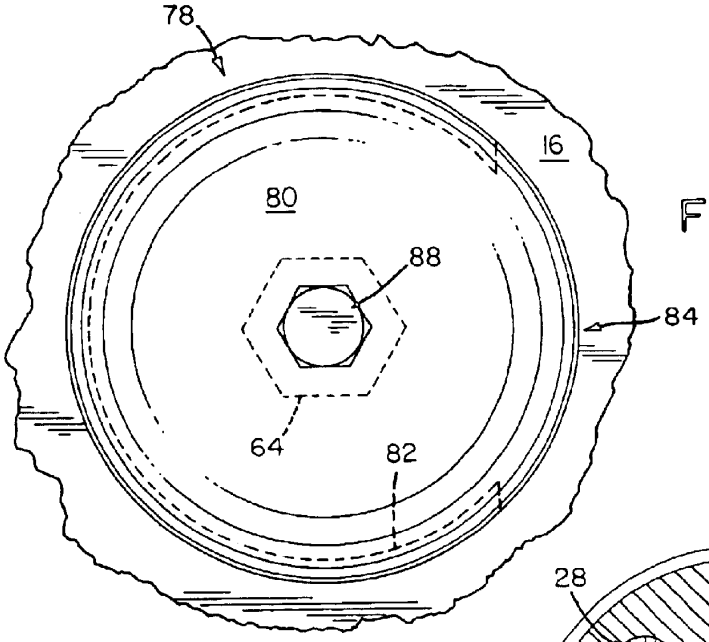

FIG. 4

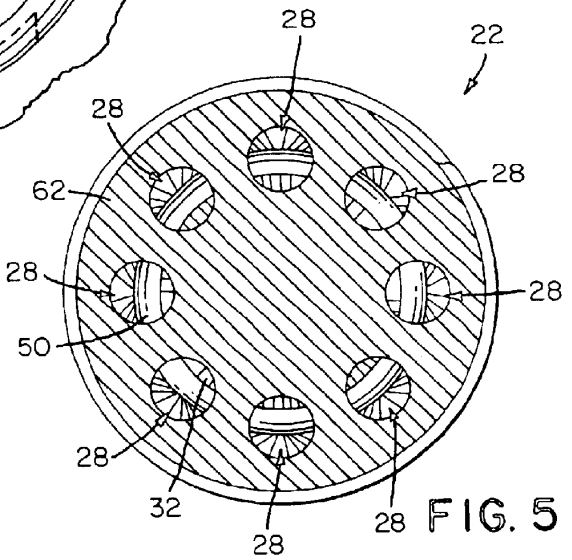

FIG. 5

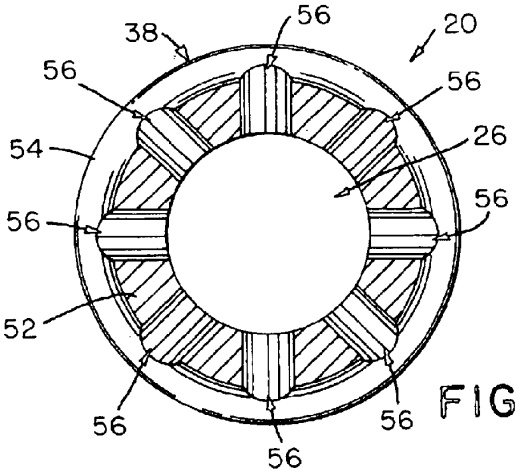

FIG. 6

PRESSURE RELIEF VALVE

FIELD OF THE INVENTION

The present invention relates generally to fluid handling apparatus and, in particular, destructible or deformable element controlled valves.

BACKGROUND OF THE INVENTION

It is difficult to produce oil and gas in an economic manner from low permeability reservoir rocks. Production rates are often boosted by resorting to hydraulic fracturing, a technique that increases rock permeability by opening channels through which hydrocarbons can flow to recovery wells. During hydraulic fracturing, a fluid is pumped into the earth under high pressure where it enters a reservoir rock and fractures it. Proppants are carried in suspension by the fluid into the fractures. When the pressure is released, the fractures partially close on the proppants, leaving channels for oil and gas to flow.

Specialized pumps are used to develop the pressures necessary to complete a hydraulic fracturing procedure or "frac job." These pumps are usually provided with so-called fluid ends within which reciprocating plungers place frac fluids under pressure. On rare occasions, enough proppant can become trapped or captured within a fluid end to block the flow of fluid from it, sometimes leading to catastrophic pump failure. A need exists, therefore, for a product that will prevent the buildup of excessive pressures within the fluid end of a pump in the event of a flow blockage.

SUMMARY OF THE INVENTION

In light of the problems associated with conventional oilfield pumping equipment, it is a principal object of the present invention to provide a pressure relief valve that can be easily installed in the fluid end of a conventional, high-pressure pump to vent fluids in the event that pressures exceeding a predetermined threshold are reached. The preferred pressure relief valve permits the pressure threshold to be set by a user so as to ensure maximum safety in any operating environment.

It is another object of the invention to provide a pressure relief valve of the type described that can be readily sized for installation in fluid ends of numerous makes and models. The pressure relief valve can also be installed and serviced with minimal training and with conventional tools. Should the pressure relief valve ever open to relieve pressures in an abnormal situation, it can be rapidly returned to use with the replacement of an expendable part.

It is a further object of the invention to provide a pressure relief valve whose fluid discharge can be directed into an area selected by a user.

It is an object of the invention to provide improved elements and arrangements thereof in a pressure relief valve for the purposes described that is lightweight, inexpensive to manufacture, and fully dependable in use.

Briefly, the pressure relief valve in accordance with this invention achieves the objects noted above by featuring a cage for positioning within a passageway connecting an area of high pressure with an area of low pressure. The cage includes a valve seat having a central channel open to the area of high pressure and a valve seat retainer abutting the valve seat and having a plurality of peripheral channels open to the area of low pressure. The central channel is normally blocked by the head of a deformable plug positioned within the cage between the valve seat and the valve seat retainer. A hollow, bulbous tail extends from the head and abuts the valve seat retainer. Deformation of the tail moves the head away from the seat thus permitting fluid to move from the area of high pressure through the central and peripheral channels to the area of low pressure. A deflector is carried by the valve seat retainer to direct the flow of fluid from the peripheral channels into the area of low pressure.

The foregoing and other objects, features and advantages of the present invention will become readily apparent upon further review of the following detailed description of the preferred embodiment as illustrated in the accompanying drawings.

BRIEF DESCRIPTION OF THE DRAWINGS

The present invention may be more readily described with reference to the accompanying drawings, in which:

FIG. **1** is a cross-sectional view of a fluid end of a pump having a pressure relief valve in accordance with the present invention.

FIG. **2** is an enlarged cross-sectional view of the pressure relief valve of FIG. **1**.

FIG. **3** is a perspective view of deformable plug forming part of the pressure relief valve.

FIG. **4** is a side elevational view taken along line **4**—**4** of FIG. **2**.

FIG. **5** is a cross-sectional view taken along line **5**—**5** of FIG. **2**.

FIG. **6** is a cross-sectional view taken along line **6**—**6** of FIG. **2**.

Similar reference characters denote corresponding features consistently throughout the accompanying drawings.

DETAILED DESCRIPTION OF THE PREFERRED EMBODIMENT

A pressure relief valve in accordance with the present invention is shown at **10**. Pressure relief valve **10** includes a cage **12** for positioning within a passageway **14** in a fluid end **16** connecting a pumping chamber **18**, i.e., an area of high pressure, with the atmosphere, i.e., an area of low pressure. Cage **12** includes a valve seat **20** and an abutting valve seat retainer **22** that together define an interior cavity **24**. Access to cavity **24** is provided by means of a central channel **26** in valve seat **20** that opens to pumping chamber **18** and by means of a plurality of peripheral channels **28** in valve seat retainer **22** that open to the atmosphere. Central channel **26** is normally blocked by the head **30** of a deformable plug **32** positioned within cavity **24**. A hollow, bulbous tail **34** extends from head **30** and abuts valve seat retainer **22**. Should a preset pressure differential be reached between pumping chamber **18** and the atmosphere, the force exerted on head **30** will cause tail **34** to buckle thereby permitting head **30** to move away from valve seat **20** as shown by broken lines in FIG. **2**. Fluid in pumping chamber **18** is then free to flow through cavity **24**, and channels **26** and **28** to the atmosphere.

Valve seat **20** includes a primary cylinder **36** for engaging head **30** of plug **32** and a secondary cylinder **38** for distributing pressure surges generated in pumping chamber **18** evenly across head **30**. As shown, primary cylinder **36** includes an outwardly extending peripheral flange **40** at its inner end for abutting a valve seat deck **42** of corresponding shape in passageway **14** and an inwardly extending peripheral flange **44** at its outer end. A pair of O-rings **46** in primary cylinder **36** adjacent flange **40** ensures a fluid-tight seal

within passageway **14**. A circumferential groove **48** in peripheral flange **44**, however, snugly receives head **30** and defines a shoulder **50** spacing the side of head **30** from the side of cavity **24**.

Secondary cylinder **38** includes a neck **52** extending outwardly from primary cylinder **36** and a peripheral rim **54** at the free end of neck **52**. Neck **52** has a number of radial openings **56** that permit fluid to readily pass from the interior to the exterior of secondary cylinder **38**. An inwardly beveled surface **58** on peripheral rim **54** directs fluid into the interior of secondary cylinder **38**.

Neck **52** is provided with an outer diameter that is less than that of primary cylinder **36** and peripheral rim **54**. This area of reduced diameter permits fluids entering secondary cylinder **38** through its open outer end to be jetted radially away from head **30** with minimal frictional losses thereby ensuring that pressures are not concentrated on any side of head **30** or in any portion of pumping chamber **18**. It is believed, over time, that the application of uneven pressure loads to head **30** could result in fluid leakage around head **30** and through relief valve **10**. Of course, the circulatory action of fluids through and around neck **52** ensures that any solids carried by fluids in pumping chamber **18** will remain in suspension and not become lodged against head **30** thereby impeding its action.

Valve seat retainer **22** comprises a major cylinder **60** whose outer end is closed by an integral cap **62**. The exterior of cylinder **60** is threaded so that it may be screwed into a correspondingly threaded portion of passageway **14**. To facilitate the turning of cylinder **60** to remove such from passageway **14** by means of a wrench (not shown), an outwardly projecting, hexagonal fitting **64** is provided to the center of cap **62**. Peripheral channels **28** penetrate cap **62** about hexagonal fitting **64** and place cavity **24** in fluid communication with the atmosphere. To ensure that channels **28** cannot become completely blocked by deformed plug **32** when pressure relief valve **10** is open, channels **28** are as widely spaced as possible from the center of cap **62** and partially penetrate major cylinder **60**. An O-ring **66** in the inner end of major cylinder **60** ensures a fluid-tight seal against valve seat **20**.

Deformable plug **32** comprises head **30** and tail **34** integrally formed with, and extending from, head **30**. Head **30** is a disk whose load-bearing surface **68** and reinforcing surface **70** are conical and bulge outwardly from the center of the disk so as to permit fluids to easily flow around head **30** when head **30** is disengaged from valve seat **20**. An O-ring **72** about the periphery of surface **68** of head **30** ensures a fluid-tight seal against valve seat **20** in groove **48**. Tail **34**, however, is a hollow bulb that is open at its free end **74**. The free end **74** of tail **34** normally engages the center of cap **62** of valve seat retainer **22** remote from peripheral channels **28** and presses head **30** into groove **48** of valve seat **20** providing a fluid-tight seal. The diameter and thickness of tail **34** are variable, depending on pressure differential threshold desired for opening pressure relief valve **10**. To reduce weight, a hollow **76** may be formed in the surface **70** of head **30** that opens into tail **34**.

Shapes other than open-ended bulbs could be incorporated into tail **34**. Cones, cylinders and rods, to name a few, are all possibilities. Unlike bulbs, however, such were not found to collapse evenly and completely so as to not block peripheral channels **28** in valve seat retainer **22**. Furthermore, such were not found to collapse within the close tolerance ranges required by pressure relief valve **10**.

A deflector **78** is carried by valve seat retainer **22** to direct the flow of fluid from peripheral channels **28** when pressure relief valve **10** is open. Deflector **78** includes a bowl **80** having a rim **82** with a height substantially equal to that of hexagonal fitting **64** and a notch **84** formed therein serving as a spray nozzle. Rim **82** is oriented so that it points toward cage **12** and the area of high pressure.

A bore **86** in the center of bowl **80** permits the passage of a threaded fastener **88** into a correspondingly sized threaded aperture **90** in hexagonal fitting **64** in valve seat retainer **22**. Not only does fastener **88** releasably secure bowl **80** to cage **12**, but, by selectively loosening and retightening fastener **88**, notch **84** may be oriented within a wide, 360° range about fastener **88**. Thus, fluids emitted from pressure relief valve **10** may be sprayed from notch **84** upwardly, downwardly or laterally as conditions dictate.

Although pressure relief valve **10** could be used in conjunction with pressure vessels and equipment of various types, it is anticipated that pressure relief valve **10** would find immediate application within the fluid end **16** of a high-pressure pump. Fluid end **16** includes at least one horizontal passageway **14** for receiving a reciprocating plunger **92** at one of its ends and a pressure relief valve **10** at the other of its ends. A vertical passageway **94** intersects passageway **14** to define pumping chamber **18** at their intersection. Vertical passageway **94** contains a suction valve **96** beneath chamber **18** and a discharge valve **98** above chamber **18**. A suction manifold **100** is attached to the bottom of fluid end **16** to provide a flow of fluid into chamber **18** via suction valve **96**. A discharge passage **102** intersects vertical passage **94** and receives fluid pressurized by plunger **92** via discharge valve **98** and ports such from fluid end **16**.

From the foregoing, it will be appreciated that use of pressure relief valve **10** is straightforward. First, pressure relief valve **10** is installed within the fluid end **16** of a pump as shown in FIG. **1** and plunger **92** is caused to reciprocate thereby moving fluid from manifold **100**, through valve **96**, into pumping chamber **18** where the fluid is pressurized, past valve **98**, and from passage **102** where it can be conveyed by suitable conduits (not shown) to a location where needed. A blockage of valve **98** or passage **102** will cause the fluid pressure in pumping chamber **18** to increase.

The front surface of the head **30** of plug **32**, being exposed to pumping chamber **18**, will transmit the imparted load to tail **34**. Should the load exceed the yield point of tail **34**, tail **34** will evenly flatten or collapse thereby opening pressure relief valve **10**. Fluid may now pass from pumping chamber **18** through cage **12** and out to the atmosphere. The direction that the fluid is sprayed from pressure relief valve **10** is determined in advance by appropriately adjusting the positioning of the notch **84** in deflector bowl **80**. Of course, the spraying of fluid from valve **10** can be easily detected by the operator who can shut down the associated pump. Catastrophic damage to fluid end **16** is usually avoided if the operator acts with reasonable prudence.

Pressure relief valve **10** can be continuously reused. To do so, an operator need only unscrew valve seat retainer **22** from passageway **14** and replace the deformed plug **32** that permitted pressure relief valve **10** to open with a new, undeformed plug **32**. After repositioning valve seat retainer **22** and deflector **78**, fluid end **16** can be reenergized. The process requires only a few minutes to complete after which, provided the blockage that caused pressure relief valve **10** to open is cleared, fluid end **16** can be reenergized.

While the invention has been described with a high degree of particularity, it will be appreciated by those skilled in the art that modifications may be made thereto. For example, the

configuration of the head **30** of plug **32** can be made either as a flat plate for easy manufacturing or may be made even more streamlined to further enhance the ability of pressure relief valve **10**

I claim:

1. A pressure relief valve, comprising:

a valve seat having a central channel;

a valve seat retainer abutting said valve seat and having a major cylinder, a cap, and a plurality of peripheral channels;

a deformable plug contained entirely within said major cylinder positioned between said valve seat and said cap valve seat retainer, said deformable plug including:

a head abutting said valve seat and normally blocking said central channel; and,

a tail extending from said head and abutting said valve seat retainer at a location

between said peripheral channels, and said tail being capable of

deforming upon receiving a predetermined load from said head thereby permitting said head to move away from said valve seat and unblock said central channel.

2. The pressure relief valve according to claim **1** wherein said tail is a hollow bulb.

3. The pressure relief valve according to claim **1** further comprising a bowl with a notched rim pivotally secured to said valve seat retainer for deflecting fluids passed through said peripheral channels.

4. A pressure relief valve, comprising:

a cage for positioning within a passageway connecting an area of high pressure with an area of low pressure, said cage including:

an interior cavity;

a central channel for placing said interior cavity and said area of high pressure in fluid communication; and,

a plurality of peripheral channels for placing said interior cavity in fluid communication with said low area of pressure;

a one-time deformable plug positioned within said interior cavity, said one-time deformable plug including:

a head abutting said cage and normally blocking said central channel; and,

a tail extending from said head and abutting said cage at a location between said

peripheral channels, and said tail being capable of deforming once upon receiving a

predetermined load from said head thereby permitting said head to move away from said

cage and unblock said central channel.

5. The pressure relief valve according to claim **4** wherein said tail is a hollow bulb.

6. The pressure relief valve according to claim **4** further comprising a bowl with a notched rim pivotally secured to said cage for deflecting fluids passed through said peripheral channels.

7. A pressure relief valve, comprising:

a valve seat having a central channel;

a valve seat retainer abutting said valve seat and having a plurality of peripheral channels;

a one-time deformable plug positioned between said valve seat and said valve seat retainer, said one-time deformable plug including:

a head abutting said valve seat and normally blocking said central channel, said head including:

a conical, load-bearing surface abutting said valve seat; and

a conical, reinforcing surface opposite said load-bearing surface; and,

a hollow, bulbous tail integrally formed with said head and extending therefrom, said tail abutting said valve seat retainer at a location between said peripheral channels, and said tail being capable of deforming once upon receiving a predetermined load from said head thereby permitting said head to move away from said valve seat and unblock said central channel.

8. The pressure relief valve according to claim **7** further comprising a bowl with a notched rim pivotally secured to said cage for deflecting fluids passed through said peripheral channels.

* * * * *